WET FGD AND ID FAN & AUXILIARY POWER CONCEPTUAL DESIGN COSTS

CONCEPTUAL COST ESTIMATE

PREPARED FOR

NEBRASKA PUBLIC POWER DISTRICT

GERALD GENTLEMAN STATION, UNITS 1&2

Sargent & Lundy LLC

Project No. 12681-006
September 1, 2011

Table of Contents

Basis of Estimate

Technical Basis

Estimate Summary

Estimates by Area:

- Unit 1 Absorber Area (Estimate No. 31249A)
- Unit 2 Absorber Area (Estimate No. 31252A)
- Units 1&2 Common (Estimate No. 31250A)
- Auxiliary Power and Booster ID Fans (Estimate No. 31251A)

Vendor Budgetary Quotes

NPPD Budgetary Quotes

Client: NPPD
Station: GGS Station Units 1&2
Project No.: 12681-006

Preparer: A. Teferici
Date: 09/01/2011

Basis of Estimate

Estimate(s):
31249A – GGS Unit 1 Absorber Area
31250A – GGS Unit 1&2 Common Facilities
31251A – GGS AUX Power and Fans
31252A – GGS Unit 2 Absorber Area

General Information

Project Type - WFGD System for Gerald Gentleman Station Units 1&2
Type of estimate – Conceptual with +/- 20% contingency
Project location – Sutherland, Nebraska
MW rating of Unit 1 & 2: 705 & 745 MW Gross
Unique site issues – Existing Site
Contracting strategy – EPC

The major components of the capital cost consist of equipment, field materials and supplies, direct labor, indirect field labor, and indirect construction costs. The capital cost was determined through the process of estimating the cost of equipment, components and bulk quantity. The estimate is structured using a code of account system to facilitate recognition of cost within major cost categories.

The cost estimate is conceptual in nature, and based largely on Sargent & Lundy LLC experience on similar projects. Detailed engineering has not been performed to firm up the project details, and specific site characteristics have not been fully analyzed. We have attempted to assign allowances where necessary to cover issues that are likely to arise but are not clearly quantified at this time.

Estimate Development

These estimates were based on a previous revision prepared in 2008. The scope of work remained the same with some system changes and minor quantity updates based on new engineering developments. See technical basis for details.

Listed below is a summary level (not all inclusive) scope of facilities included in the estimate:

- Absorber Area System for each Unit
- Reagent Prep System
- Dewatering System
- Chimney for each Unit
- ZLD System
- Reagent Handling System
- Gypsum Handling System
- Booster Fans
- New Railroad Tracks & Modifications
- Buildings
- Aux power system upgrades
- Switchyard Expansion
- Distributed Control System upgrades
- Demolition and relocation of existing facilities
- Ductwork
- Sitework
- Foundations
- General civil, structural, mechanical, electrical and I/C work

Client: NPPD
Station: GGS Station Units 1&2
Project No.: 12681-006

Sargent & Lundy LLC

Preparer: A. Teferici
Date: 09/01/2011

Pricing and Quantities

The data used to develop this estimate is based on using material and equipment types and sizes typically used in a power plant.

Major equipment prices were based on vendor and client furnished budget cost information. They include the following:

- Wet Limestone Forced Oxidation FGD System including: Absorber Area, Reagent Prep, and Dewatering System Quote from "Babcock Power Environmental".
- Chimney Quote from "Hamon Custodis"
- FGD ZLD System Quote from "Aquatech"
- Reagent and Gypsum Handling System Quote from "Robert & Schaefer"
- Booster Fan Quote from "TLT-Babcock"
- New Railroad Tracks & Modifications cost provided by Owner
- Electrical Equipment prices are from "ABB"

We received several quotes for the WFGD system and the ID Fans, from which the higher quote was used in the estimate.

Equipment and material costs were estimated on the basis of S&L in house data, vendor catalogs, industry publications and other related projects. In most cases, the costs for bulk materials and equipment were derived from recent vendor or manufacturer's quote for similar items on other projects. Where actual or specific information regarding equipment specifications was available, that information was used to size and quantify material and equipment requirements. Where information was not furnished or was not adequate, requirements were assumed and estimated based on information available from project estimates of similar type and size.

Quantities contained herein are intended to be reasonable and representative of projects of this type. All quantity data was developed internally by S&L. Quantities were developed based on project experience of a plant of comparable size and then adjusted based on actual size and capacity differences and also taking into consideration the specific site layout based on the general arrangement drawing. While project specifics will certainly have an impact on these quantities, we feel they are appropriate for a study at this level.

Labor Wage Rates

Labor Profile – Union

Labor wage rate selected for the estimate - 2011 Union rates for Omaha, Nebraska. Base craft rates are as published in RS Means Labor Rates for the Construction Industry, 2010 Edition. The craft rates are then incorporated into work crews appropriate for the activities by adding allowances for small tools, construction equipment, insurance, and site overheads to arrive at crew rates detailed in the cost estimate. A 1.11 regional labor productivity multiplier is included based on the Compass International Global Construction Yearbook.

Labor Work Schedule and Incentives - Assumed 5x10 work week. All labor hours are subject to $10/hr per diem subsistence as labor incentives to attract skilled labor to job site.

Project Direct & Construction Indirect Costs

The estimate is constructed in such a manner where most of the direct construction costs are determined directly and several direct construction cost accounts are determined indirectly by taking a percentage of the directly determined costs and are identified as "Variable Accounts". These percentages are based on our experience with similar type and size projects. Sales tax is specific to location. Listed below are the variable accounts.

- Scaffolding @ 2.5% of total material and labor cost
- Cost of overtime – 5-10's Hour Days

- Subsistence (per diem) – 10 $/Hr
- Consumables @ 0.5% of total material and labor cost
- Freight on Material & Equipment @ 5%
- Sales Tax @ 5.5% on material and labor
- Mobilization/Demobilization @ 1% of labor cost
- Contractors G&A Expense @ 10%
- Contractors Profit @ 5%

Project Indirect Costs

Included are the following:

- Engineering, Procurement & Project Services was based on the previous estimate then marked up to reflect current status
- Construction Management @ 1.5% of construction cost
- Craft start-up and commission support @ 1% of construction cost
- Spare Parts @ 3% of equipment cost
- Owner's Engineering was based on the previous estimate then marked up to reflect current status
- Owner's Bond and Fees @ 2.5% of $200,000,000
- Owner's Costs @ 2% of construction cost
- EPC Fee @ 15% of construction cost

These percentages are based on our experience with similar type and size projects. The EPC fee is considered to be a conservative approach as recent trends are less by a few percentage points.

Escalation

Included in the estimate. Annual escalation rate is 4% for all cost categories. This is considered to be a conservative approach as current values for equipment and labor escalation are slightly less.

Contingency

Based on past history of similar projects, a 20% contingency is reasonable and is included in the estimate and applied to all cost categories without exception. This rate relates to pricing and quantity variation in the specific scope estimated. The contingency does not cover new scope outside of what has been estimated, only the variation in the defined scope. This is a composite rate and already takes into account the plus and minuses of expected actual costs. The rate does not represent the high range of all costs, nor is it expected that the project will experience all actual costs be realized at the maximum value of their range of variation.

Exclusions

This cost estimate reflects the current day costs associated with the construction of this project as described in this report. There are, however, items that have been specifically excluded from the estimate. In order to establish the overall project costs. The following items must also be accounted for. This list is for information only and is not intended to be all inclusive.

- Permitting costs
- Rock excavation
- Remediation of soil for hazardous materials
- Land cost for new switchyard addition
- MVAR/Reactors.
- Fencing modification and gateway including switchyard security system retrofit
- Power outage cost during construction

Client: NPPD
Station: GGS Station Units 1&2
Project No.: 12681-006

Sargent & Lundy LLC

Preparer: A. Teferici
Date: 09/01/2011

Assumptions

- All electrical work will be done during switchyard power outage.
- Assumed that fencing modification and gateway including switchyard security system retrofit will be required.
- Assumed that water table is below the excavation depth.

Technical Basis

The technical basis for this estimate is very similar to the February 15, 2008 estimate, with several revisions and more defined scope. Below is a listing of the major changes from the previous estimate.

- Absorber tower materials of construction changed from 2205 alloy steel to Stebbins tile lined concrete. This also results in a larger foundation design. All of the absorber tower internals are C-276.
- The material handling systems for limestone and gypsum changed significantly from the design used for the 2008 estimate based on further engineering developments previously agreed with NPPD. This also results in material quantity changes for excavation and foundation work.
- Addition of limestone rail car thaw shed. It is noted that NPPD transmittal #115 dated 3/26/09 requested that the car thaw shed be similar to the Sheldon Station car thaw shed, which is oil fired. S&L is requesting NPPD to advise whether the GGS shed shall be oil fired or electric heated. This estimate assumed electric heated shed as the oil system equipment for an oil fired shed is unknown at this time.
- Addition of make-up water well pumps and associated piping.
- Addition of a zero liquid discharge (ZLD) wastewater treatment system to treat the FDG system chloride blowdown flows. A conservative blowdown flow of 10 gpm used to size the ZLD system equipment.
- Relocation of the hydrogen building and transformer oil interceptor to provide minimum clearance requirements from the new transformers.
- More defined electrical scope to better define equipment and material quantities for switchgear, MCCs, bus, cable, raceway, etc.
- Revisions to various material quantities to match the latest GGS site general arrangement, including building steel, foundations, etc.
- Use of auger cast piles in lieu of caissons for foundation design. S&L reviewed the GGS soil investigation report, and concluded that auger cast piles are more appropriate.
- New vendor quotes were received for the following equipment, reflecting current pricing:
    - WFGD
    - Chimney
    - Material Handling
    - ID fans and motors
    - ZLD system
    - Major transformers

The following is a summary of the technical basis of the Phase 1 wet limestone forced oxidation FGD system capital cost estimate and the Unit 1 and 2 ID Fan and Aux Power system capital cost estimate.

1. Limestone Handling common to both Units
    a. Limestone rail car thaw shed
        i. Based on electric heating system (originally estimated on 3/24/09, but has been updated with current pricing)
    b. Limestone rail car unloader
        i. Bottom dump cars.
        ii. Capable of unloading a 126 car unit train at 2000 TPH, once per month. The station will be able to unload in 8 hrs if the train is not split, 12-14 hrs if the train is split.
        iii. Two steel (2) track hoppers including one (1) belt feeder, 72 in. wide, 50 ft. long.
        iv. Track hopper (unloading) building, including car shaker and support steel.
        v. Fogging type dust suppression system.
        vi. Heating and ventilation system.
        vii. Sump and sump pumps (2)
        viii. Two (2) 1000 TPH each frozen limestone crackers
        ix. Electrical equipment room for unloading building.
        x. Vendor quote from Roberts and Schaefer Co (for items i through vii, minus the sump).
    c. Limestone stack out
        i. One (1) conveyor, 48 in. wide, 550 ft. long, 2000 TPH, with 200 ft in tunnel and 350 ft. in enclosed and heated gallery.
        ii. Drop spout to grade (telescopic chute), no dust control.
        iii. 37 day active pile and 328 day inactive pile.
        iv. Bulldozer for moving limestone, about 4 hours/day.
        v. Vendor quote from Roberts and Schaefer Co (for items i through ii).
    d. Limestone reclaim
        i. Two (2) conveyors, each 30 in. wide, 650 ft. long, 500 TPH, with 175 ft. in tunnel and 475 ft. in enclosed and heated gallery.
        ii. Two steel (2) reclaim hoppers including two (2) variable rate belt feeders.
        iii. Two (2) lime silo feed reversible conveyors, each 30 in. wide, 40 ft. long, 400 TPH.
        iv. Fogging type dust suppression system.
        v. Heating and ventilation system.
        vi. Sump and sump pumps (2)
        vii. Two (2) 400 TPH each frozen limestone crackers
        viii. Vendor quote from Roberts and Schaefer Co (for items i through vi, minus the sump).
    e. General
        i. All service air and service water piping within vendor's scope

ii. All fire protection (conveyor and belt feeder drive ends only) within vendor's scope
iii. All gallery work, hoists and trolleys within vendor's scope.
iv. All motors, control panels and lighting fixtures within vendor's scope.

2. Limestone Preparation common to both Units
   a. Limestone day silo
      i. 2 steel day silos with bin vent for dust control, 20 ft diameter, 60 ft tall.
      ii. Bin activator per silo.
      iii. Silo level monitoring system.
      iv. Vendor quotes from Babcock Power, B&W and Advatech (for items i. through iii).
   b. Ball mills
      i. Two (2) at 100% capacity, 1 operating 1 spare, each with a classifiers to size the limestone, and a limestone slurry tank.
      ii. Four (4) ball mill slurry pumps, 1 operating 1 spare per train.
      iii. Two ball mill limestone weigh feeders.
      iv. Two (2) limestone slurry feed pumps to recirculate slurry to each absorber and back to the slurry tank.
      v. Vendor quotes from Babcock Power, B&W and Advatech (for items i. through iv).
   c. Slurry Loop: Two (2), 1 operating and 1 spare 950 lineal feet of pipe to Unit 1 absorber, Two (2), 1 operating and 1 spare, 1500 lineal feet of pipe to Unit 2 absorber.
   d. Limestone Prep Building, including lighting, HVAC and fire protection.

3. Absorber Area per Unit
   a. One (1) 68.5 ft. diameter absorber vessel per unit.
   b. Vessel is concrete lined with Stebbins tile.
   c. Inlet wet/dry interface to FGD absorber is C-276.
   d. L/G of 59.8 Unit 1 and 55.5 Unit 2 (gpm/kacfm).
   e. Three (3) spray levels, 2 operating and 1 spare.
   f. Two (2) trays per absorber, C-276.
   g. Five (5) slurry recycle pumps, 4 operating and1 spare.
   h. Two (2) absorber bleed pumps, 1 operating and 1 spare.
   i. Side entry agitators.
   j. Two (2) levels of mist eliminators, Polypropylene.
   k. Two (2) mist eliminator water pumps, 1 operating and 1 spare.
   l. Two (2) oxidation air compressors, 1 operating and 1 spare.
   m. One (1) emergency quench pump
   n. Absorber building.
   o. Elevator in absorber area.
   p. Hoists and trolleys.
   q. Roofing.
   r. Lighting, heating and ventilation.

s. Vendor quotes from Babcock Power, B&W and Advatech (for items a through l).

4. Emergency Diesel Generator

5. Dewatering Area common to both Units
   a. Two (2) primary hydroclones.
   b. Two (2) vacuum belt filters, 1 operating and 1 spare.
   c. One (1) make-up water tank with two (2) make-up water pumps, 1 operating and 1 spare.
   d. One (1) reclaim water tank with two (2) reclaim pumps, 1 operating and 1 spare.
   e. One (1) filter feed tank with two (2) filter feed pumps, 1 operating and 1 spare.
   f. Dewatering Building, including lighting and HVAC.
   g. Vendor quotes from Babcock Power, B&W and Advatech (for items a through e).

6. Gypsum Handling common to both Units
   a. Two (2) gypsum collecting conveyors, each 24 in. wide, 75 ft. long, 75 TPH.
   b. Motorized diverter gates.
   c. Two (2) gypsum stack out conveyors, each 24 in. wide, 200 ft. long, 75 TPH, within an enclosed and heated gallery.
   d. Heating and ventilation system.
   e. Two (2) drop spouts to grade (telescopic chute), no dust control.
   f. 60 hr. normal stack out pile and 60 hr. emergency stack out pile.
   g. General
      i. All service air and service water piping within vendor's scope
      ii. All fire protection (conveyor drive ends only) within vendor's scope
      iii. All gallery work, hoists and trolleys within vendor's scope.
      iv. All motors, control panels and lighting fixtures within vendor's scope.
   h. Vendor quote from Roberts and Schaefer Co (for items a through e, and g).

7. Flues Including Support Steel per Unit
   a. Fan outlet to absorber inlet
      i. Carbon steel.
      ii. Velocity = 4000 to 4500 fpm.
      iii. 4" insulation with lagging.
   b. Absorber to chimney
      i. FRP.
      ii. Velocity 4000 fpm.
   c. Flue gas path reinforcement
      i. No reinforcement.

8. New Chimney per Unit
   a. New concrete shell with FRP liner and two breechings.

b. 550' height, 30 ft diameter FRP liner.
c. Basic liquid collection system and drains in bottom.
d. Abandon existing chimney in place and it could be an optional bypass around the FGD.
e. No capping of the old chimney included. The price is $1,900,000 per chimney.
f. Vendor Quote from Hamon Custodis (for items a through c).

9. Control System Modifications per Unit
   a. Based on number of I/O points. Each Unit has 1,218 I/O points.

10. Rail Yard Extension common to both Units
   a. Track modification work to accommodate limestone trains. Quotation provided by NPPD and included in estimate.
   b. Work for limestone track bridge. NPPD estimate from December of 2009 included in estimate and escalated to current day pricing.

11. Subsurface and Foundation Work-All
   a. Foundation system consists of 18" x 70' auger cast piles.

12. Civil Work-All
   a. Initial site grading / earthwork.
   b. Site drainage systems, including limestone storm water run-off pond.
   c. Roads.
   d. White rock surfacing.

13. Demolition and Relocation
   a. Demolition of warehouse east of Unit 2 baghouse and addition of new warehouse next to GGS main plant warehouse.
   b. Demolition of old chimney not included. The approximate cost is $4,500,000 per chimney.
   c. Relocation of Hydrogen Building
   d. Relocation of Transformer Oil Interceptor.

14. Pipe Racks common to both Units
   a. Between reagent prep and absorber and dewatering areas

15. CEMS per Unit
   a. New CEMS.

16. Water Treatment (ZLD system) common to both Units
   a. Based on 10 gpm total waste water blowdown from Unit 1 and 2 FGD systems.
   b. Pre-treatment system including One (1) clarifier, lime dosing system, soda ash dosing system, coagulant/flocculant dosing system and a sludge dewatering system.

c. Forced circulating crystallizer system including flash tank, foam separator, vapor compressor, pumps and heat exchangers
d. One (1) Belt Filter Press
e. Preassembled and skid-mounted.
f. Vendor quote from Aquatech (for items b through e).
g. Water treatment building, including lighting, HVAC and fire protection.

17. Instrument/Service Air Compressor, Dryer and Receiver common to both Units

18. Field Painting-All
    a. Multiple coat system used for exposed ductwork only.
    b. Inorganic zinc primer and polyurethane system used for steel.

19. Performance Testing- All
    a. Not included. Part of Owner's costs.

20. Piping common to both Units
    a. Water supply to oxidation air pipe, reagent preparation and dewatering area boundary from service water (50degF to 90 degF range).
    b. Instrument air piping to every silo or day bin, bin vent and reagent preparation/dewatering area.
    c. Heat traced piping.

21. Installation- All

22. New booster ID fans-All
    a. Two axial ID booster fans per Unit, designed to accommodate operation with FGD only or FGD and SCR..
    b. Vendor quotes from FlaktWoods and TLT Babcock.

23. Electrical-All
    a. Two (2) start up transformers (RATs).
    b. Two (2) unit auxiliary transformers (UATs).
    c. 480 V unit substation transformers.
    d. 480 V switchgear and MCC for the unloading building electrical room
    e. One (1) reagent prep electrical equipment building with medium voltage and low voltage switchgear and MCCs.
    f. Two (2) main electrical equipment buildings with medium voltage and low voltage switchgear and MCCs.
    g. Switchyard modification with additional breakers, a redundant 230 kV transmission line and rigid bus
    h. Iso-phase bus, cable bus, cable and raceway.
    i. Vendor quote from ABB (for items a and b).

24. Make-up water wells and piping
    a. Utilize existing wells OW-27 and OW-28, adding two (2) new 2600 gpm pumps and pump houses. These wells are developed but currently have no pumps. The discharge piping from these wells will "T", and be routed to the common marshalling area. Approximately 4000' of 12" pipe (mostly buried) will be required.

25. Commercial Operating Date
    a. GGS Unit 2 – Fall 2015
    b. GGS Unit 1 – Fall 2016

Nebraska Public Power District
Gerald Gentleman Station Units 1 2

Estimate Summary for Wet FGD

12681-006
9/1/2011

	Equipment Cost ($ Millions)	Material Cost ($ Millions)	Labor Cost ($ Millions)	Erection Labor Man-Hours	Total Cost ($ Millions)	Normalized Cost ($/kW)
Unit 1 Absorber Area (Estimate No. 31249A)						
Total Direct & Construction Indirect	59.782	25.793	53.073	442,688	138.649	
Project Indirect	0.000	0.000	0.000	0	29.724	
EPC portion	0.000	0.000	0.000	0	21.586	
Escalation	0.000	0.000	0.000	0	26.548	
Contingency @ 20%					38.984	
AFUDC	0.000	0.000	0.000	0	25.921	
					259.826	
Unit 2 Absorber Area (Estimate No. 31252A)						
Total Direct & Construction Indirect	59.782	25.793	53.073	442,688	138.649	
Project Indirect	0.000	0.000	0.000	0	29.724	
EPC portion	0.000	0.000	0.000	0	21.586	
Escalation	0.000	0.000	0.000	0	19.051	
Contingency @ 20%					37.485	
AFUDC	0.000	0.000	0.000	0	24.924	
					249.833	
Unit 1 & 2 Common Area (Estimate No. 31250A)						
Total Direct & Construction Indirect	76.016	32.218	90.295	786,829	198.529	
Project Indirect	0.000	0.000	0.000	0	79.404	
EPC portion	0.000	0.000	0.000	0	34.551	
Escalation	0.000	0.000	0.000	0	31.976	
Contingency @ 20%					61.982	
AFUDC	0.000	0.000	0.000	0	40.315	
					412.206	
Unit 1 & 2 Auxil. Power & ID Fans (Estimate No. 31251A)						
Total Direct & Construction Indirect	32.116	8.185	28.840	285,947	69.141	
Project Indirect	0.000	0.000	0.000	0	14.904	
EPC portion	0.000	0.000	0.000	0	10.775	
Escalation	0.000	0.000	0.000	0	9.491	
Contingency @ 20%					18.707	
AFUDC	0.000	0.000	0.000	0	12.470	
					124.713	
Project Totals						
Total Direct & Construction Indirect	227.697	91.988	225.282	1,958,152	544.967	
Project Indirect	0.000	0.000	0.000	0	153.756	
EPC portion	0.000	0.000	0.000	0	88.499	
Escalation	0.000	0.000	0.000	0	87.066	
Contingency @ 20%					157.158	
AFUDC	0.000	0.000	0.000	0	103.631	
			"All In" Grand Total with EPC Fee =		1046.578	722
			Grand Total without EPC Fee =		958.079	661
			Price Level =		Q2, 2011	

ESTIMATE NO. : 31249A
PROJECT NO. : 12681-006
ISSUE DATE : 09/01/2011
PREP/REV : AT/BJD
APPROVED :MNO

SARGENT & LUNDY

NPPD
GERALD GENTLEMAN STATION UNIT 1 ABSORBER AREA
WET FGD
CONCEPTUAL COST ESTIMATE

CODE OF ACCOUNT	DESCRIPTION A	EQUIPMENT COST	MATERIAL COST	LABOR COST	TOTAL COST
11 Total	DEMOLITION		147,600	113,932	261,532
21 Total	CIVIL WORK	1,633,600	653,959	529,394	2,816,952
22 Total	CONCRETE		1,352,350	3,537,936	4,890,286
23 Total	STEEL		11,668,345	10,654,703	22,323,048
24 Total	ARCHITECTURAL	350,000	582,625	427,707	1,360,332
25 Total	CONCRETE CHIMNEY & STACK	12,843,000			12,843,000
27 Total	PAINTING & COATING		28,000	40,564	68,564
31 Total	MECHANICAL EQUIPMENT	42,109,000	552,500	16,153,560	58,815,060
34 Total	HVAC		280,000	349,226	629,226
35 Total	PIPING		723,837	1,029,046	1,752,882
36 Total	INSULATION		1,194,144	1,958,303	3,152,447
41 Total	ELECTRICAL EQUIPMENT		280,000	299,053	579,053
44 Total	CONTROL & INSTRUMENTATION				
90	SUBTOTAL DIRECT & CONSTRUCTION INDIRECT COST	56,935,600	17,463,358	35,093,423	109,492,381
91	OTHER DIRECT & CONSTRUCTION INDIRECT COST				
91-1	SCAFFOLDING - % of ACCT NO. 90			1,313,920	1,313,920
91-2	COST DUE TO OVERTIME WORKING 5 -10 HOUR DAYS			5,057,052	5,057,052
91-3	PER DIEM			4,072,733	4,072,733
91-4	CONSUMABLES - % of ACCT NO. 90			262,784	262,784
91-5	FREIGHT ON MATERIAL - % of ACCT NO. 90		873,168		873,168
91-6	FREIGHT ON EQUIPMENT - % of ACCT NO. 90	2,846,780			2,846,780
91-7	SALES TAX - % of ACCT NO. 90 MATERIAL & EQUIPMENT SHOWN ON MATERIAL COLUMN		4,091,943		4,091,943
91-8	MOBILIZATION/DEMOBILIZATION - % OF ACCT NO. 90			350,934	350,934
91-9	CONTRACTOR'S GENERAL AND ADMINISTRATION EXPENSE - % of ACCT NO. 90, 91-1 TO 91-8		2,242,847	4,615,085	6,857,931
91-10	CONTRACTOR'S PROFIT - % of ACCT NO. 90, 91-1 TO 91-8		1,121,423	2,307,542	3,428,966
	91 - SUBTOTAL	2,846,780	8,329,381	17,980,050	29,156,211
92	TOTAL DIRECT & CONSTRUCTION INDIRECT COST	59,782,380	25,792,739	53,073,472	138,648,592
93	INDIRECT COST				
93-1	ENGINEERING, PROCUREMENT, & PROJECT SERVICES - NOT INCLUDED				
93-2	CONSTRUCTION MANAGEMENT SUPPORT - % of ACCT NO. 92				2,079,729
93-3	S-U / COMMISSIONING - % of ACCT NO. 92				1,386,486
93-4	SPARE PARTS - % of ACCT NO. 92 EQUIPMENT				1,793,471
93-5	OWNERS COST - % of ACCT NOS. 92, 93.1, 93.2, 93.3, 93.4				2,878,166
93-6	EPC FEE - % of ACCT NOS. 92, 93.1, 93.2, 93.3, 93.4				21,586,242
	93 - TOTAL				29,724,093
94	TOTAL ESCALATION				26,548,208
94-1	ESCALATION ON EQUIPMENT - % of ACCT NO. 92	8,303,083			8,303,083
94-2	ESCALATION ON MATERIAL - % of ACCT NO. 92		4,162,759		4,162,759
94-3	ESCALATION ON LABOR - % of ACCT NO. 92			9,282,442	9,282,442
94-4	ESCALATION ON INDIRECT - % of ACCT NO. 93				4,799,925
95	TOTAL CONTINGENCY				38,984,179
95-1	CONTINGENCY ON EQUIPMENT - % of ACCT NO. 92, 94.1	13,617,093			13,617,093
95-2	CONTINGENCY ON MATERIAL - % of ACCT NO. 92, 94.2		5,991,100		5,991,100
95-3	CONTINGENCY ON LABOR - % of ACCT NO. 92, 94.3			12,471,183	12,471,183
95-4	CONTINGENCY ON INDIRECT - % of ACCT NO. 93, 94.4				6,904,804

ESTIMATE NO. : 31249A
PROJECT NO. : 12681-006
ISSUE DATE : 09/01/2011
PREP/REV : AT/BJD
APPROVED :MNO

SARGENT & LUNDY

NPPD
GERALD GENTLEMAN STATION UNIT 1 ABSORBER AREA
WET FGD
CONCEPTUAL COST ESTIMATE

CODE OF ACCOUNT	DESCRIPTION A	EQUIPMENT COST	MATERIAL COST	LABOR COST	TOTAL COST
96	TOTAL CONSTRUCTION COST				233,905,072
97	INTEREST DURING CONSTRUCTION (COMPOUNDED MONTHLY)				25,921,074
98	TOTAL PROJECT COST				259,826,146

H:\INFODIV\PROJECTS\Nebraska Public Power District\Gerald G EXCEL VERSION 012711

ESTIMATE NO. : 31249A
PROJECT NO. : 12681-006
ISSUE DATE : 09/01/2011
PREP/REV : AT/BJD
APPROVED : MNO

NPPD
GERALD GENTLEMAN STATION UNIT 1 ABSORBER AREA
WET FGD
CONCEPTUAL COST ESTIMATE

SARGENT & LUNDY

PRICE LEVEL: 2011 LOCATION: Omaha, NE WAGE RATE: 11NEOMA PRODUCTIVITY FACTOR: 1.1

CODE OF ACCOUNT	DESCRIPTION A	DESCRIPTION B	QTY	UM	EQUIPMENT COST	MATERIAL COST	MAN-HOURS	CREW WAGE RATE	LABOR COST	TOTAL COST
11	**DEMOLITION**		1.1							
11-23	DUCTWORK	DEMOLITION/MODIFICATION TO EXISTING BH DUCTS	60	TN		147,600	1,056	107.89	113,932	261,532
	11-23 Total					147,600	1,056		113,932	261,532
	11 Total					147,600	1,056		113,932	261,532
21	**CIVIL WORK**									
21-13	CLEARING & GRUBBING									
21-13-1	CLEARING & GRUBBING	STRIP 12" TOPSOIL & STOCKPILE	7	AC			246	163.00	40,163	40,163
21-13-2	CLEARING & GRUBBING	CUT, STOCKPILE & FILL	9,500	CY			1,202	163.00	195,885	195,885
	21-13 Total						1,448		236,048	236,048
21-51	MISCELLANEOUS									
21-51-1	PIPE TRENCH	6" PIPE, 4' BURIAL AND BEDDING	130	LF		724	44	68.73	3,047	3,771
21-51-2	PIPE TRENCH	2" PIPE, 4' BURIAL AND BEDDING	130	LF		540	37	68.73	2,555	3,095
	21-51 Total					1,264	82		5,602	6,866
21-53	PILING & CAISSON									
21-53-1	AUGER CAST PILES 18" DIA. X 70' LONG, SUBCONTRACTOR COST INCLUDES LABOR	ABSORBER TOWER FOUNDATION	140	EA	448,000			102.76		448,000
21-53-2	AUGER CAST PILES 18" DIA. X 70' LONG, SUBCONTRACTOR COST INCLUDES LABOR	PUMP BLOWER BUILDING, ABSORBER AREA	101	EA	321,600			102.76		321,600
21-53-3	AUGER CAST PILES 18" DIA. X 70' LONG, SUBCONTRACTOR COST INCLUDES LABOR	DUCT SUPPORTS FOUNDATION	90	EA	288,000			102.76		288,000
21-53-4	AUGER CAST PILES 18" DIA. X 70' LONG, SUBCONTRACTOR COST INCLUDES LABOR	CHIMNEY SUBSTRUCTURE	120	EA	384,000			102.76		384,000
21-53-5	AUGER CAST PILES 18" DIA. X 70' LONG, SUBCONTRACTOR COST INCLUDES LABOR	PIPE RACK	60	EA	192,000			102.76		192,000
21-53-6	MOB/DEMOB & TEST PILE	INCLUDED IN UNIT 1&2 COMMON FACILITIES ESTIMATE		EA				102.76		
	21-53 Total				1,633,600					1,633,600
21-57	ROAD, PARKING AREA, & SURFACED AREA									
21-57-1	CRUSHED ROCK SURFACING, 12"		33,350	SY		390,195	734	90.75	66,583	456,778
21-57-2	ROADWAY 24' WIDE 4" ASPHALT		1,250	FT		207,500	1,636	77.65	127,055	334,555
	21-57 Total					597,695	2,370		193,638	791,333
21-99	STORM SEWER		1	LT		55,000	1,100	85.55	94,105	149,105
	21-99 Total					55,000	1,100		94,105	149,105
	21 Total				1,633,600	653,959	5,000		529,394	2,816,952

ESTIMATE NO. : 31249A
PROJECT NO. : 12681-006
ISSUE DATE : 09/01/2011
PREP/REV : AT/BJD
APPROVED : MNO

NPPD
GERALD GENTLEMAN STATION UNIT 1 ABSORBER AREA
WET FGD
CONCEPTUAL COST ESTIMATE

SARGENT & LUNDY

PRICE LEVEL: 2011 LOCATION: Omaha, NE WAGE RATE: 11NEOMA PRODUCTIVITY FACTOR: 1.1

CODE OF ACCOUNT	DESCRIPTION A	DESCRIPTION B	QTY	UM	EQUIPMENT COST	MATERIAL COST	MAN-HOURS	CREW WAGE RATE	LABOR COST	TOTAL COST
22	**CONCRETE**									
22-13	CONCRETE									
22-13-1	CONCRETE (INCLUDES REBAR, FORMWORK, EMBEDMENTS & EARTHWORK)	ABSORBER TOWER FOUNDATION	1,100	CY		236,500	8,470	66.22	560,883	797,383
22-13-2	CONCRETE (INCLUDES REBAR, FORMWORK, EMBEDMENTS & EARTHWORK)	PUMP BLOWER BUILDING, ABSORBER AREA	1,670	CY		359,050	12,859	66.22	851,523	1,210,573
22-13-3	CONCRETE (INCLUDES REBAR, FORMWORK, EMBEDMENTS & EARTHWORK)	DUCT SUPPORTS FOUNDATION	400	CY		86,000	5,280	66.22	349,642	435,642
22-13-4	CONCRETE (INCLUDES REBAR, FORMWORK, EMBEDMENTS & EARTHWORK)	CHIMNEY FDN	2,600	CY		559,000	20,020	66.22	1,325,724	1,884,724
22-13-5	CONCRETE (INCLUDES REBAR, FORMWORK, EMBEDMENTS & EARTHWORK)	PIPE RACK	500	CY		107,500	6,600	66.22	437,052	544,552
22-13-6	CONCRETE (INCLUDES REBAR, FORMWORK, EMBEDMENTS & EARTHWORK)	ELEVATOR FOUNDATION	20	CY		4,300	198	66.22	13,112	17,412
	22-13 Total					1,352,350	53,427		3,537,936	4,890,286
	22 Total					1,352,350	53,427		3,537,936	4,890,286
23	**STEEL**									
23-15	DUCTWORK									
23-15-1	DUCTWORK PANEL SECTIONS, INCL DUCT PLATE, STIFFENERS, INTERNAL TRUSSES, TURNING VANES	ID FAN OUTLET TO BOOSTER FAN INLET	600	TN		1,950,000	39,600	107.38	4,252,248	6,202,248
23-15-2	DUCTWORK PANEL SECTIONS, INCL DUCT PLATE, STIFFENERS, INTERNAL TRUSSES, TURNING VANES	BOOSTER FAN TO SCRUBBER	300	TN		975,000	19,800	107.38	2,126,124	3,101,124
23-15-3	DUCTWORK, FRP 32' DIAMETER X 200'	SCRUBBER TO CHIMNEY	20,096	SF		3,476,608	3,095	107.38	332,318	3,808,926
	23-15 Total					6,401,608	62,495		6,710,690	13,112,298
23-17	GALLERY									
23-17-1	GRATING	PUMP BLOWER BUILDING	3,333	SF		43,996	733	80.14	58,763	102,759
23-17-2	STAIRS	PUMP BLOWER BUILDING	2,000	SF		180,400	2,530	80.14	202,754	383,154
23-17-3	HANDRAIL AND GUARDPLATE	PUMP BLOWER BUILDING	2,500	LF		90,750	1,513	80.14	121,212	211,962
23-17-4	LADDERS	PUMP BLOWER BUILDING	667	LF		58,696	587	80.14	47,039	105,735
23-17-5	SWING GATES	PUMP BLOWER BUILDING	33	EA		9,075	145	80.14	11,636	20,711
	23-17 Total					382,917	5,508		441,405	824,321
23-25	ROLLED SHAPE									
23-25-1	ROLLED SHAPE	PUMP BLOWER BUILDING	500	TN		1,230,000	8,800	100.22	881,936	2,111,936
23-25-2	ROLLED SHAPE	PUMP BLOWER BUILDING GALLERY SUPPORT STEEL	167	TN		410,820	2,939	100.22	294,567	705,387
23-25-3	ROLLED SHAPE	MISCELLANEOUS STRUCTURAL STEEL, ABSORBER AREA	100	TN		246,000	1,760	100.22	176,387	422,387
23-25-4	ROLLED SHAPE	ID FAN OUTLET TO BOOSTER FAN INLET DUCT SUPPORTS	600	TN		1,476,000	10,560	100.22	1,058,323	2,534,323
23-25-5	ROLLED SHAPE	BOOSTER FAN TO SCRUBBER DUCT SUPPORTS	100	TN		246,000	1,760	100.22	176,387	422,387

ESTIMATE NO. : 31249A
PROJECT NO. : 12681-006
ISSUE DATE : 09/01/2011
PREP/REV : AT/BJD
APPROVED : MNO

NPPD
GERALD GENTLEMAN STATION UNIT 1 ABSORBER AREA
WET FGD
CONCEPTUAL COST ESTIMATE

SARGENT & LUNDY

PRICE LEVEL: 2011 LOCATION: Omaha, NE WAGE RATE: 11NEOMA PRODUCTIVITY FACTOR: 1.1

CODE OF ACCOUNT	DESCRIPTION A	DESCRIPTION B	QTY	UM	EQUIPMENT COST	MATERIAL COST	MAN-HOURS	CREW WAGE RATE	LABOR COST	TOTAL COST
23-25-6	ROLLED SHAPE	SCRUBBER TO CHIMNEY DUCT SUPPORTS	200	TN		492,000	3,520	100.22	352,774	844,774
23-25-7	ROLLED SHAPE	PIPE RACK STRUCTURAL STEEL	300	TN		783,000	5,610	100.22	562,234	1,345,234
	23-25 Total					4,883,820	34,949		3,502,609	8,386,429
	23 Total					11,668,345	102,952		10,654,703	22,323,048
24	**ARCHITECTURAL**									
24-15	DOOR (INCL. FRAME & HARDWARE)									
24-15-1	MANDOORS	PUMP BLOWER BUILDING	3	EA		4,485	26	58.89	1,555	6,040
24-15-2	ROLLUP DOOR	PUMP BLOWER BUILDING	1	EA		16,500	44	58.89	2,591	19,091
	24-15 Total					20,985	70		4,146	25,131
24-17	ELEVATOR									
24-17-1	ELEVATOR	RACK & PINION	1	EA	350,000		1,375	90.42	124,328	474,328
	24-17 Total				350,000		1,375		124,328	474,328
24-37	ROOFING									
24-37-1	INSULATED METAL ROOFING	PUMP BLOWER BUILDING	14,000	SF		206,920	1,371	67.38	92,351	299,271
	24-37 Total					206,920	1,371		92,351	299,271
24-41	SIDING									
24-41-1	INSULATED METAL SIDING	PUMP BLOWER BUILDING	24,000	SF		354,720	2,350	88.05	206,882	561,602
	24-41 Total					354,720	2,350		206,882	561,602
	24 Total				350,000	582,625	5,166		427,707	1,360,332
25	**CONCRETE CHIMNEY & STACK**									
25-13	CONCRETE CHIMNEY	CHIMNEY STRUCTURE, CONCRETE W SINGLE FRP LINER, 550' HIGH - HAMON CUSTODIS BUDGETARY QUOTE	1	EA	12,843,000					12,843,000
	25-13 Total				12,843,000					12,843,000
	25 Total				12,843,000					12,843,000
27	**PAINTING & COATING**									
27-17	PAINTING									
27-17-1	TOUCH-UP PAINTING	PUMP BLOWER BUILDING	28,000	SF		28,000	616	65.85	40,564	68,564
	27-17 Total					28,000	616		40,564	68,564
	27 Total					28,000	616		40,564	68,564
31	**MECHANICAL EQUIPMENT**									
31-27	DAMPERS & ACCESSORIES									

ESTIMATE NO. : 31249A
PROJECT NO. : 12681-006
ISSUE DATE : 09/01/2011
PREP/REV : AT/BJD
APPROVED : MNO

SARGENT & LUNDY

NPPD
GERALD GENTLEMAN STATION UNIT 1 ABSORBER AREA
WET FGD
CONCEPTUAL COST ESTIMATE

PRICE LEVEL: 2011 LOCATION: Omaha, NE WAGE RATE: 11NEOMA PRODUCTIVITY FACTOR: 1.1

CODE OF ACCOUNT	DESCRIPTION A	DESCRIPTION B	QTY	UM	EQUIPMENT COST	MATERIAL COST	MAN-HOURS	CREW WAGE RATE	LABOR COST	TOTAL COST
31-27-1	DAMPERS	BOOSTER FANS - BASED ON THE ESTIMATED ADDITIONAL COST PROVIDED BY TLT BABCOCK	2	EA	160,000		858	107.38	92,132	252,132
	31-27 Total				160,000		858		92,132	252,132
31-33	EXPANSION JOINT									
31-33-1	EXPANSION JOINT	ID FAN OUTLET TO BOOSTER FAN INLET	1,100	LF		275,000	2,420	107.38	259,860	534,860
31-33-2	EXPANSION JOINT	BOOSTER FAN TO SCRUBBER	230	LF		57,500	506	107.38	54,334	111,834
31-33-3	EXPANSION JOINT	SCRUBBER TO CHIMNEY	320	LF		80,000	704	107.38	75,596	155,596
	31-33 Total					412,500	3,630		389,789	802,289
31-41	FIRE PROTECTION EQUIPMENT & SYSTEM									
31-41-1	FIRE PROTECTION EQUIPMENT & SYSTEM	PUMP BLOWER BUILDING	28,000	SF		140,000	2,064	83.48	172,269	312,269
	31-41 Total					140,000	2,064		172,269	312,269
31-45	FLUE GAS CLEANUP, FGD EQUIPMENT							83.48		
31-45-1	ABSORBER AREA SYSTEM	BASED ON BABCOCK POWER BUGETARY EQUIPMENT PRICE. INCLUDES ABSORBER VESSEL ERECTION. LABOR COST IS FOR MECHANICAL EQUIPMENT ERECTION	1	LS	41,652,000		184,800	83.48	15,427,104	57,079,104
	31-45 Total				41,652,000		184,800		15,427,104	57,079,104
31-75	PUMP									
31-75-1	PUMP	QUENCH PUMPS	1	LT	165,000		880	82.12	72,266	237,266
	31-75 Total				165,000		880		72,266	237,266
31-99	MODEL STUDIES		1	EA	132,000			83.48		132,000
	31-99 Total				132,000					132,000
	31 Total				42,109,000	552,500	192,232		16,153,560	58,815,060
34	**HVAC**									
34-99	HVAC	PUMP BLOWER BUILDING	28,000	SF		280,000	4,620	75.59	349,226	629,226
	34-99 Total					280,000	4,620		349,226	629,226
	34 Total					280,000	4,620		349,226	629,226
35	**PIPING**									
35-13	LARGE BORE PIPING									
35-13-1	6" CS SCH 40, HT, INSULATED PIPING	ABOVE GROUND PIPING	1,380	LF		51,474	2,444	90.17	220,374	271,848
35-13-2	6" CS SCH 40 PIPING	ABOVE GROUND PIPING	130	LF		4,849	230	90.17	20,760	25,609
35-13-3	6" FRP PIPING	ABOVE GROUND PIPING	1,630	LF		99,919	1,255	90.17	113,172	213,091

ESTIMATE NO. : 31249A
PROJECT NO. : 12681-006
ISSUE DATE : 09/01/2011
PREP/REV : AT/BJD
APPROVED : MNO

NPPD
GERALD GENTLEMAN STATION UNIT 1 ABSORBER AREA
WET FGD
CONCEPTUAL COST ESTIMATE

SARGENT & LUNDY

PRICE LEVEL: 2011 LOCATION: Omaha, NE WAGE RATE: 11NEOMA PRODUCTIVITY FACTOR: 1.1

CODE OF ACCOUNT	DESCRIPTION A	DESCRIPTION B	QTY	UM	EQUIPMENT COST	MATERIAL COST	MAN-HOURS	CREW WAGE RATE	LABOR COST	TOTAL COST
35-13-4	6" HDPE, SDR 9 PIPING	BURIED PIPING	130	LF		1,053	99	85.55	8,441	9,494
35-13-5	4" FRP PIPING	ABOVE GROUND PIPING	2,510	LF		138,552	1,132	90.17	102,073	240,625
35-13-6	3" CS SCH 40 PIPING	ABOVE GROUND PIPING	1,260	LF		24,696	1,857	90.17	167,467	192,163
35-13-7	2.5" FRP PIPING	ABOVE GROUND PIPING	60	LF		3,006	22	90.17	1,964	4,970
35-13-8	VALVES	6" SS GATE VALVE , FLANGED, 150LB	3	EA		10,650	53	90.17	4,761	15,411
35-13-9	VALVES	6" CI POST INDICATOR 250LB, MECHANICAL JOINT WITH BOXES	3	EA		2,115	13	90.17	1,190	3,305
35-13-10	VALVES	4" SS GATE VALVE , FLANGED, 150LB	4	EA		8,200	53	90.17	4,801	13,001
35-13-11	VALVES	3" VALVES FOR SERVICE WATER ISOLATION	40	EA		40,000	343	90.17	30,946	70,946
35-13-12	VALVES	3" VALVES FOR SERVICE AIR ISOLATION	40	EA		40,000	343	90.17	30,946	70,946
	35-13 Total					424,514	7,845		706,896	1,131,410
35-15	SMALL BORE PIPING							90.17		
35-15-1	2" CS SCH 80 PIPING	ABOVE GROUND PIPING	325	LF		7,248	408	90.17	36,749	43,996
35-15-2	2" CS/RL SCH 40 PIPING	ABOVE GROUND PIPING	130	LF		3,796	44	90.17	3,997	7,793
35-15-3	2" SS 304 SCH 40 PIPING	ABOVE GROUND PIPING	1,130	LF		58,195	1,790	90.17	161,397	219,592
35-15-4	2" CS SCH 80 PIPING	BURIED PIPING	130	LF		3,458	103	90.17	9,284	12,742
35-15-5	1" SS 304 SCH 40S PIPING	ABOVE GROUND PIPING	130	LF		2,626	162	90.17	14,571	17,197
35-15-6	VALVES	2" SS VALVES FOR INSTRUMENT AIR ISOLATION	200	EA		169,000	160	90.17	14,422	183,422
	35-15 Total					244,323	2,666		240,419	484,742
35-99	BOP PIPING & VALVES	FOR QUENCH PUMPS	1	LT		55,000	906	90.17	81,730	136,730
	35-99 Total					55,000	906		81,730	136,730
	35 Total					723,837	11,417		1,029,046	1,752,882
36	**INSULATION**									
36-13	INSULATION, DUCT & EQUIPMENT									
36-13-1	MINERAL WOOL INSULATION 4" THK, 8 LB/CF DENSITY, ALUMINUM LAGGING - INSTALLED IN PLACE	ID FAN OUTLET TO BOOSTER FAN INLET	52,000	SF		780,000	17,160	75.33	1,292,663	2,072,663
36-13-2	MINERAL WOOL INSULATION 4" THK, 8 LB/CF DENSITY, ALUMINUM LAGGING - INSTALLED IN PLACE	BOOSTER FAN TO SCRUBBER	25,000	SF		375,000	8,250	75.33	621,473	996,473
	36-13 Total					1,155,000	25,410		1,914,135	3,069,135
36-15	INSULATION, PIPE									
36-15-1	INSULATION, PIPE	3" CAL SIL INSULATION FOR 6" PIPE	1,380	LF		39,144	758	58.25	44,168	83,311
	36-15 Total					39,144	758		44,168	83,311
	36 Total					1,194,144	26,168		1,958,303	3,152,447

ESTIMATE NO. : 31249A
PROJECT NO. : 12681-006
ISSUE DATE : 09/01/2011
PREP/REV : AT/BJD
APPROVED : MNO

SARGENT & LUNDY

NPPD
GERALD GENTLEMAN STATION UNIT 1 ABSORBER AREA
WET FGD
CONCEPTUAL COST ESTIMATE

PRICE LEVEL: 2011 LOCATION: Omaha, NE WAGE RATE: 11NEOMA PRODUCTIVITY FACTOR: 1.1

CODE OF ACCOUNT	DESCRIPTION A	DESCRIPTION B	QTY	UM	EQUIPMENT COST	MATERIAL COST	MAN-HOURS	CREW WAGE RATE	LABOR COST	TOTAL COST
41	**ELECTRICAL EQUIPMENT**									
41-37	LIGHTING ACCESSORY (FIXTURE)									
41-37-1	LIGHTING ACCESSORY (FIXTURE)	PUMP BLOWER BUILDING	28,000	SF		280,000	4,620	64.73	299,053	579,053
	41-37 Total					280,000	4,620		299,053	579,053
41-41	ELECTRICAL MISCELLANEOUS	INCLUDED IN AUX POWER & FAN ESTIMATE	1	EA				68.77		
	41-41 Total									
	41 Total					280,000	4,620		299,053	579,053
44	**CONTROL & INSTRUMENTATION**									
44-23	INSTRUMENTATION MISCELLANEOUS	INCLUDED IN UNIT 1&2 COMMON FACILITIES ESTIMATE	1	EA				76.60		
	44-23 Total									
	44 Total									
90	SUBTOTAL DIRECT & CONSTRUCTION INDIRECT COST				56,935,600	17,463,358	407,273		35,093,423	109,492,381
91	OTHER DIRECT & CONSTRUCTION INDIRECT COST									
91-1	SCAFFOLDING - % of ACCT NO. 90		2.5	%					1,313,920	1,313,920
91-2	COST DUE TO OVERTIME WORKING 5 -10 HOUR DAYS		1.0	EA			35,415		5,057,052	5,057,052
91-3	PER DIEM		10.0	$/HR					4,072,733	4,072,733
91-4	CONSUMABLES - % of ACCT NO. 90		0.5	%					262,784	262,784
91-5	FREIGHT ON MATERIAL - % of ACCT NO. 90		5.0	%		873,168				873,168
91-6	FREIGHT ON EQUIPMENT - % of ACCT NO. 90		5.0	%	2,846,780					2,846,780
91-7	SALES TAX - % of ACCT NO. 90 MATERIAL & EQUIPMENT SHOWN ON MATERIAL COLUMN		5.5	%		4,091,943				4,091,943
91-8	MOBILIZATION/DEMOBILIZATION - % OF ACCT NO. 90		1.0	%					350,934	350,934
91-9	CONTRACTOR'S GENERAL AND ADMINISTRATION EXPENSE - % of ACCT NO. 90, 91-1 TO 91-8		10.0	%		2,242,847			4,615,085	6,857,931
91-10	CONTRACTOR'S PROFIT - % of ACCT NO. 90, 91-1 TO 91-8		5.0	%		1,121,423			2,307,542	3,428,966
	91 - SUBTOTAL				2,846,780	8,329,381			17,980,050	29,156,211
92	TOTAL DIRECT & CONSTRUCTION INDIRECT COST				59,782,380	25,792,739	442,688		53,073,472	138,648,592
93	INDIRECT COST									
93-1	ENGINEERING, PROCUREMENT, & PROJECT SERVICES - NOT INCLUDED	INCLUDED IN UNIT 1&2 COMMON FACILITIES		%						

ESTIMATE NO. : 31249A
PROJECT NO. : 12681-006
ISSUE DATE : 09/01/2011
PREP/REV : AT/BJD
APPROVED : MNO

SARGENT & LUNDY

NPPD
GERALD GENTLEMAN STATION UNIT 1 ABSORBER AREA
WET FGD
CONCEPTUAL COST ESTIMATE

PRICE LEVEL: 2011 LOCATION: Omaha, NE WAGE RATE: 11NEOMA PRODUCTIVITY FACTOR: 1.1

CODE OF ACCOUNT	DESCRIPTION A	DESCRIPTION B	QTY	UM	EQUIPMENT COST	MATERIAL COST	MAN-HOURS	CREW WAGE RATE	LABOR COST	TOTAL COST
93-2	CONSTRUCTION MANAGEMENT SUPPORT - % of ACCT NO. 92		1.5	%						2,079,729
93-3	S-U / COMMISSIONING - % of ACCT NO. 92		1.0	%						1,386,486
93-4	SPARE PARTS - % of ACCT NO. 92 EQUIPMENT		3.0	%						1,793,471
93-5	OWNERS COST - % of ACCT NOS. 92, 93.1, 93.2, 93.3, 93.4		2.0	%						2,878,166
93-6	EPC FEE - % of ACCT NOS. 92, 93.1, 93.2, 93.3, 93.4		15.0	%						21,586,242
	93 - TOTAL									29,724,093
94	TOTAL ESCALATION									26,548,208
94-1	ESCALATION ON EQUIPMENT - % of ACCT NO. 92		13.9	%	8,303,083					8,303,083
94-2	ESCALATION ON MATERIAL - % of ACCT NO. 92		16.1	%		4,162,759				4,162,759
94-3	ESCALATION ON LABOR - % of ACCT NO. 92		17.5	%					9,282,442	9,282,442
94-4	ESCALATION ON INDIRECT - % of ACCT NO. 93		16.1	%						4,799,925
95	TOTAL CONTINGENCY									38,984,179
95-1	CONTINGENCY ON EQUIPMENT - % of ACCT NO. 92, 94.1		20.0	%	13,617,093					13,617,093
95-2	CONTINGENCY ON MATERIAL - % of ACCT NO. 92, 94.2		20.0	%		5,991,100				5,991,100
95-3	CONTINGENCY ON LABOR - % of ACCT NO. 92, 94.3		20.0	%					12,471,183	12,471,183
95-4	CONTINGENCY ON INDIRECT - % of ACCT NO. 93, 94.4		20.0	%						6,904,804
96	TOTAL CONSTRUCTION COST									233,905,072
97	INTEREST DURING CONSTRUCTION (COMPOUNDED MONTHLY)									25,921,074
98	TOTAL PROJECT COST									259,826,146

H:\INFODIV\PROJECTS\Nebraska Public Power District\Gerald Gentlemen - Wet FGD\[31249A2 - Gerald Gentleman Stati EXCEL VERSION 012711

ESTIMATE NO. : 31249A
PROJECT NO. : 12681-006
ISSUE DATE : 09/01/2011
PREP/REV : AT/BJD
APPROVED : MNO

SARGENT & LUNDY

NPPD
GERALD GENTLEMAN STATION UNIT 1 ABSORBER AREA
WET FGD
CASH FLOW REPORT

PRICE LEVEL 2011

CASH FLOW BY MONTH

		JAN-2011	FEB-2011	MAR-2011	APR-2011	MAY-2011	JUN-2011	JUL-2011	AUG-2011	SEP-2011	OCT-2011	NOV-2011	DEC-2011
TOTAL CONSTRUCTION COST	M	0	0	0	0	0	0	0	0	0	0	0	0
TOTAL CONSTRUCTION COST	C	0	0	0	0	0	0	0	0	0	0	0	0
INTEREST DURING CONSTRUCTION	M	0	0	0	0	0	0	0	0	0	0	0	0
INTEREST DURING CONSTRUCTION	C	0	0	0	0	0	0	0	0	0	0	0	0
TOTAL	M	0	0	0	0	0	0	0	0	0	0	0	0
TOTAL	C	0	0	0	0	0	0	0	0	0	0	0	0

		JAN-2012	FEB-2012	MAR-2012	APR-2012	MAY-2012	JUN-2012	JUL-2012	AUG-2012	SEP-2012	OCT-2012	NOV-2012	DEC-2012
TOTAL CONSTRUCTION COST	M	0	0	0	0	0	0	0	0	0	0	0	0
TOTAL CONSTRUCTION COST	C	0	0	0	0	0	0	0	0	0	0	0	0
INTEREST DURING CONSTRUCTION	M	0	0	0	0	0	0	0	0	0	0	0	0
INTEREST DURING CONSTRUCTION	C	0	0	0	0	0	0	0	0	0	0	0	0
TOTAL	M	0	0	0	0	0	0	0	0	0	0	0	0
TOTAL	C	0	0	0	0	0	0	0	0	0	0	0	0

		JAN-2013	FEB-2013	MAR-2013	APR-2013	MAY-2013	JUN-2013	JUL-2013	AUG-2013	SEP-2013	OCT-2013	NOV-2013	DEC-2013
TOTAL CONSTRUCTION COST	M	22,724,190	0	0	0	0	0	0	0	0	0	0	0
TOTAL CONSTRUCTION COST	C	22,724,190	22,724,190	22,724,190	22,724,190	22,724,190	22,724,190	22,724,190	22,724,190	22,724,190	22,724,190	22,724,190	22,724,190
INTEREST DURING CONSTRUCTION	M	94,760	95,155	95,552	95,950	96,350	96,752	97,156	97,561	97,968	98,376	98,786	99,198
INTEREST DURING CONSTRUCTION	C	94,760	189,915	285,467	381,417	477,767	574,520	671,675	769,236	867,203	965,580	1,064,366	1,163,564
TOTAL	M	22,818,950	95,155	95,552	95,950	96,350	96,752	97,156	97,561	97,968	98,376	98,786	99,198
TOTAL	C	22,818,950	22,914,105	23,009,657	23,105,607	23,201,957	23,298,710	23,395,865	23,493,426	23,591,394	23,689,770	23,788,556	23,887,754

		JAN-2014	FEB-2014	MAR-2014	APR-2014	MAY-2014	JUN-2014	JUL-2014	AUG-2014	SEP-2014	OCT-2014	NOV-2014	DEC-2014
TOTAL CONSTRUCTION COST	M	63,600,554	0	0	0	0	0	0	0	0	0	0	0
TOTAL CONSTRUCTION COST	C	86,324,744	86,324,744	86,324,744	86,324,744	86,324,744	86,324,744	86,324,744	86,324,744	86,324,744	86,324,744	86,324,744	86,324,744
INTEREST DURING CONSTRUCTION	M	364,826	366,348	367,875	369,409	370,950	372,497	374,050	375,610	377,176	378,749	380,328	381,914
INTEREST DURING CONSTRUCTION	C	1,528,390	1,894,738	2,262,613	2,632,023	3,002,972	3,375,469	3,749,519	4,125,128	4,502,304	4,881,053	5,261,381	5,643,296
TOTAL	M	63,965,381	366,348	367,875	369,409	370,950	372,497	374,050	375,610	377,176	378,749	380,328	381,914
TOTAL	C	87,853,135	88,219,483	88,587,358	88,956,767	89,327,717	89,700,213	90,074,263	90,449,873	90,827,049	91,205,798	91,586,126	91,968,040

		JAN-2015	FEB-2015	MAR-2015	APR-2015	MAY-2015	JUN-2015	JUL-2015	AUG-2015	SEP-2015	OCT-2015	NOV-2015	DEC-2015
TOTAL CONSTRUCTION COST	M	97,225,715	0	0	0	0	0	0	0	0	0	0	0
TOTAL CONSTRUCTION COST	C	183,550,460	183,550,460	183,550,460	183,550,460	183,550,460	183,550,460	183,550,460	183,550,460	183,550,460	183,550,460	183,550,460	183,550,460
INTEREST DURING CONSTRUCTION	M	788,938	792,228	795,531	798,849	802,180	805,525	808,884	812,257	815,644	819,046	822,461	825,891
INTEREST DURING CONSTRUCTION	C	6,432,233	7,224,461	8,019,993	8,818,842	9,621,021	10,426,547	11,235,431	12,047,688	12,863,332	13,682,378	14,504,839	15,330,729
TOTAL	M	98,014,653	792,228	795,531	798,849	802,180	805,525	808,884	812,257	815,644	819,046	822,461	825,891
TOTAL	C	189,982,693	190,774,921	191,570,452	192,369,301	193,171,481	193,977,006	194,785,890	195,598,147	196,413,792	197,232,837	198,055,298	198,881,189

ESTIMATE NO. : 31249A
PROJECT NO. : 12681-006
ISSUE DATE : 09/01/2011
PREP/REV : AT/BJD
APPROVED : MNO

SARGENT & LUNDY

NPPD
GERALD GENTLEMAN STATION UNIT 1 ABSORBER AREA
WET FGD
CASH FLOW REPORT

PRICE LEVEL 2011

CASH FLOW BY MONTH

		JAN-2016	FEB-2016	MAR-2016	APR-2016	MAY-2016	JUN-2016	JUL-2016	AUG-2016	SEP-2016	OCT-2016	NOV-2016	DEC-2016
TOTAL CONSTRUCTION COST	M	50,354,613	0	0	0	0	0	0	0	0	0	0	0
TOTAL CONSTRUCTION COST	C	233,905,072	233,905,072	233,905,072	233,905,072	233,905,072	233,905,072	233,905,072	233,905,072	233,905,072	233,905,072	233,905,072	233,905,072
INTEREST DURING CONSTRUCTION	M	1,039,313	1,043,647	1,047,999	1,052,369	1,056,758	1,061,164	1,065,590	1,070,033	1,074,495	1,078,976	0	0
INTEREST DURING CONSTRUCTION	C	16,370,042	17,413,690	18,461,689	19,514,058	20,570,816	21,631,981	22,697,570	23,767,603	24,842,098	25,921,074	25,921,074	25,921,074
TOTAL	M	51,393,926	1,043,647	1,047,999	1,052,369	1,056,758	1,061,164	1,065,590	1,070,033	1,074,495	1,078,976	0	0
TOTAL	C	250,275,115	251,318,762	252,366,761	253,419,131	254,475,888	255,537,053	256,602,642	257,672,675	258,747,170	259,826,146	259,826,146	259,826,146

		JAN-2017	FEB-2017	MAR-2017	APR-2017	MAY-2017	JUN-2017	JUL-2017	AUG-2017	SEP-2017	OCT-2017	NOV-2017	DEC-2017
TOTAL CONSTRUCTION COST	M	0	0	0	0	0	0	0	0	0	0	0	0
TOTAL CONSTRUCTION COST	C	233,905,072	233,905,072	233,905,072	233,905,072	233,905,072	233,905,072	233,905,072	233,905,072	233,905,072	233,905,072	233,905,072	233,905,072
INTEREST DURING CONSTRUCTION	M	0	0	0	0	0	0	0	0	0	0	0	0
INTEREST DURING CONSTRUCTION	C	25,921,074	25,921,074	25,921,074	25,921,074	25,921,074	25,921,074	25,921,074	25,921,074	25,921,074	25,921,074	25,921,074	25,921,074
TOTAL	M	0	0	0	0	0	0	0	0	0	0	0	0
TOTAL	C	259,826,146	259,826,146	259,826,146	259,826,146	259,826,146	259,826,146	259,826,146	259,826,146	259,826,146	259,826,146	259,826,146	259,826,146

		JAN-2018	FEB-2018	MAR-2018	APR-2018	MAY-2018	JUN-2018	JUL-2018	AUG-2018	SEP-2018	OCT-2018	NOV-2018	DEC-2018
TOTAL CONSTRUCTION COST	M	0	0	0	0	0	0	0	0	0	0	0	0
TOTAL CONSTRUCTION COST	C	233,905,072	233,905,072	233,905,072	233,905,072	233,905,072	233,905,072	233,905,072	233,905,072	233,905,072	233,905,072	233,905,072	233,905,072
INTEREST DURING CONSTRUCTION	M	0	0	0	0	0	0	0	0	0	0	0	0
INTEREST DURING CONSTRUCTION	C	25,921,074	25,921,074	25,921,074	25,921,074	25,921,074	25,921,074	25,921,074	25,921,074	25,921,074	25,921,074	25,921,074	25,921,074
TOTAL	M	0	0	0	0	0	0	0	0	0	0	0	0
TOTAL	C	259,826,146	259,826,146	259,826,146	259,826,146	259,826,146	259,826,146	259,826,146	259,826,146	259,826,146	259,826,146	259,826,146	259,826,146

		JAN-2019	FEB-2019	MAR-2019	APR-2019	MAY-2019	JUN-2019	JUL-2019	AUG-2019	SEP-2019	OCT-2019	NOV-2019	DEC-2019
TOTAL CONSTRUCTION COST	M	0	0	0	0	0	0	0	0	0	0	0	0
TOTAL CONSTRUCTION COST	C	233,905,072	233,905,072	233,905,072	233,905,072	233,905,072	233,905,072	233,905,072	233,905,072	233,905,072	233,905,072	233,905,072	233,905,072
INTEREST DURING CONSTRUCTION	M	0	0	0	0	0	0	0	0	0	0	0	0
INTEREST DURING CONSTRUCTION	C	25,921,074	25,921,074	25,921,074	25,921,074	25,921,074	25,921,074	25,921,074	25,921,074	25,921,074	25,921,074	25,921,074	25,921,074
TOTAL	M	0	0	0	0	0	0	0	0	0	0	0	0
TOTAL	C	259,826,146	259,826,146	259,826,146	259,826,146	259,826,146	259,826,146	259,826,146	259,826,146	259,826,146	259,826,146	259,826,146	259,826,146

		JAN-2020	FEB-2020	MAR-2020	APR-2020	MAY-2020	JUN-2020	JUL-2020	AUG-2020	SEP-2020	OCT-2020	NOV-2020	DEC-2020
TOTAL CONSTRUCTION COST	M	0	0	0	0	0	0	0	0	0	0	0	0
TOTAL CONSTRUCTION COST	C	233,905,072	233,905,072	233,905,072	233,905,072	233,905,072	233,905,072	233,905,072	233,905,072	233,905,072	233,905,072	233,905,072	233,905,072
INTEREST DURING CONSTRUCTION	M	0	0	0	0	0	0	0	0	0	0	0	0
INTEREST DURING CONSTRUCTION	C	25,921,074	25,921,074	25,921,074	25,921,074	25,921,074	25,921,074	25,921,074	25,921,074	25,921,074	25,921,074	25,921,074	25,921,074
TOTAL	M	0	0	0	0	0	0	0	0	0	0	0	0
TOTAL	C	259,826,146	259,826,146	259,826,146	259,826,146	259,826,146	259,826,146	259,826,146	259,826,146	259,826,146	259,826,146	259,826,146	259,826,146

ESTIMATE NO. : 31249A
PROJECT NO. : 12681-006
ISSUE DATE : 09/01/2011
PREP/REV : AT/BJD
APPROVED : MNO

SARGENT & LUNDY

NPPD
GERALD GENTLEMAN STATION UNIT 1 ABSORBER AREA
WET FGD
CASH FLOW REPORT

PRICE LEVEL 2011

CASH FLOW BY YEAR

		2011	2012	2013	2014	2015	2016	2017	2018	2019	2020
TOTAL CONSTRUCTION COST	A	0	0	22,724,190	63,600,554	97,225,715	50,354,613	0	0	0	0
TOTAL CONSTRUCTION COST	C	0	0	22,724,190	86,324,744	183,550,460	233,905,072	233,905,072	233,905,072	233,905,072	233,905,072
INTEREST DURING CONSTRUCTION	A	0	0	1,163,564	4,479,731	9,687,434	10,590,345	0	0	0	0
INTEREST DURING CONSTRUCTION	C	0	0	1,163,564	5,643,295	15,330,729	25,921,074	25,921,074	25,921,074	25,921,074	25,921,074
TOTAL	A	0	0	23,887,754	68,080,286	106,913,149	60,944,957	0	0	0	0
TOTAL	C	0	0	23,887,754	91,968,040	198,881,189	259,826,146	259,826,146	259,826,146	259,826,146	259,826,146

H:\INFOD\V\PROJECTS\Nebraska Public Power District\Gerald Gentlemen - Wet FGD\[31249A2 - Gerald Gentleman Station Unit 1 Absorber Area.xls]Summary Report

ESTIMATE NO. : 31252A
PROJECT NO. : 12681-006
ISSUE DATE : 09/01/2011
PREP/REV : AT/BJD
APPROVED :MNO

SARGENT & LUNDY

NPPD
GERALD GENTLEMAN STATION UNIT 2 ABSORBER AREA
WET FGD
CONCEPTUAL COST ESTIMATE

CODE OF ACCOUNT	DESCRIPTION A	EQUIPMENT COST	MATERIAL COST	LABOR COST	TOTAL COST
11 Total	DEMOLITION		147,600	113,932	261,532
21 Total	CIVIL WORK	1,633,600	653,959	529,394	2,816,952
22 Total	CONCRETE		1,352,350	3,537,936	4,890,286
23 Total	STEEL		11,668,345	10,654,703	22,323,048
24 Total	ARCHITECTURAL	350,000	582,625	427,707	1,360,332
25 Total	CONCRETE CHIMNEY & STACK	12,843,000			12,843,000
27 Total	PAINTING & COATING		28,000	40,564	68,564
31 Total	MECHANICAL EQUIPMENT	42,109,000	552,500	16,153,560	58,815,060
34 Total	HVAC		280,000	349,226	629,226
35 Total	PIPING		723,837	1,029,046	1,752,882
36 Total	INSULATION		1,194,144	1,958,303	3,152,447
41 Total	ELECTRICAL EQUIPMENT		280,000	299,053	579,053
44 Total	CONTROL & INSTRUMENTATION				
90	SUBTOTAL DIRECT & CONSTRUCTION INDIRECT COST	56,935,600	17,463,358	35,093,423	109,492,381
91	OTHER DIRECT & CONSTRUCTION INDIRECT COST				
91-1	SCAFFOLDING - % of ACCT NO. 90			1,313,920	1,313,920
91-2	COST DUE TO OVERTIME WORKING 5 -10 HOUR DAYS			5,057,052	5,057,052
91-3	PER DIEM			4,072,733	4,072,733
91-4	CONSUMABLES - % of ACCT NO. 90			262,784	262,784
91-5	FREIGHT ON MATERIAL - % of ACCT NO. 90		873,168		873,168
91-6	FREIGHT ON EQUIPMENT - % of ACCT NO. 90	2,846,780			2,846,780
91-7	SALES TAX - % of ACCT NO. 90 MATERIAL & EQUIPMENT SHOWN ON MATERIAL COLUMN		4,091,943		4,091,943
91-8	MOBILIZATION/DEMOBILIZATION - % OF ACCT NO. 90			350,934	350,934
91-9	CONTRACTOR'S GENERAL AND ADMINISTRATION EXPENSE - % of ACCT NO. 90, 91-1 TO 91-8		2,242,847	4,615,085	6,857,931
91-10	CONTRACTOR'S PROFIT - % of ACCT NO. 90, 91-1 TO 91-8		1,121,423	2,307,542	3,428,966
	91 - SUBTOTAL	2,846,780	8,329,381	17,980,050	29,156,211
92	TOTAL DIRECT & CONSTRUCTION INDIRECT COST	59,782,380	25,792,739	53,073,472	138,648,592
93	INDIRECT COST				
93-1	ENGINEERING, PROCUREMENT, & PROJECT SERVICES - NOT INCLUDED				
93-2	CONSTRUCTION MANAGEMENT SUPPORT - % of ACCT NO. 92				2,079,729
93-3	S-U / COMMISSIONING - % of ACCT NO. 92				1,386,486
93-4	SPARE PARTS - % of ACCT NO. 92 EQUIPMENT				1,793,471
93-5	OWNERS COST - % of ACCT NOS. 92, 93.1, 93.2, 93.3, 93.4				2,878,166
93-6	EPC FEE - % of ACCT NOS. 92, 93.1, 93.2, 93.3, 93.4				21,586,242
	93 - TOTAL				29,724,093
94	TOTAL ESCALATION				19,051,251
94-1	ESCALATION ON EQUIPMENT - % of ACCT NO. 92	5,684,411			5,684,411
94-2	ESCALATION ON MATERIAL - % of ACCT NO. 92		3,010,624		3,010,624
94-3	ESCALATION ON LABOR - % of ACCT NO. 92			6,884,137	6,884,137
94-4	ESCALATION ON INDIRECT - % of ACCT NO. 93				3,472,078
95	TOTAL CONTINGENCY				37,484,787
95-1	CONTINGENCY ON EQUIPMENT - % of ACCT NO. 92, 94.1	13,093,358			13,093,358
95-2	CONTINGENCY ON MATERIAL - % of ACCT NO. 92, 94.2		5,760,673		5,760,673
95-3	CONTINGENCY ON LABOR - % of ACCT NO. 92, 94.3			11,991,522	11,991,522
95-4	CONTINGENCY ON INDIRECT - % of ACCT NO. 93, 94.4				6,639,234

ESTIMATE NO. : 31252A
PROJECT NO. : 12681-006
ISSUE DATE : 09/01/2011
PREP/REV : AT/BJD
APPROVED :MNO

SARGENT & LUNDY

NPPD
GERALD GENTLEMAN STATION UNIT 2 ABSORBER AREA
WET FGD
CONCEPTUAL COST ESTIMATE

CODE OF ACCOUNT	DESCRIPTION A	EQUIPMENT COST	MATERIAL COST	LABOR COST	TOTAL COST
96	TOTAL CONSTRUCTION COST				224,908,723
97	INTEREST DURING CONSTRUCTION (COMPOUNDED MONTHLY)				24,924,109
98	TOTAL PROJECT COST				249,832,833

H:\INFODIV\PROJECTS\Nebraska Public Power District\Gerald G EXCEL VERSION 012711

ESTIMATE NO. : 31252A
PROJECT NO. : 12681-006
ISSUE DATE : 09/01/2011
PREP/REV : AT/BJD
APPROVED : MNO

SARGENT & LUNDY

NPPD
GERALD GENTLEMAN STATION UNIT 2 ABSORBER AREA
WET FGD
CONCEPTUAL COST ESTIMATE

PRICE LEVEL: 2011 LOCATION: Omaha, NE WAGE RATE: 11NEOMA PRODUCTIVITY FACTOR: 1.1

CODE OF ACCOUNT	DESCRIPTION A	DESCRIPTION B	QTY	UM	EQUIPMENT COST	MATERIAL COST	MAN-HOURS	CREW WAGE RATE	LABOR COST	TOTAL COST
11	**DEMOLITION**		1.1							
11-23	DUCTWORK	DEMOLITION/MODIFICATION TO EXISTING BH DUCTS	60	TN		147,600	1,056	107.89	113,932	261,532
	11-23 Total					147,600	1,056		113,932	261,532
	11 Total					147,600	1,056		113,932	261,532
21	**CIVIL WORK**									
21-13	CLEARING & GRUBBING									
21-13-1	CLEARING & GRUBBING	STRIP 12" TOPSOIL & STOCKPILE	7	AC			246	163.00	40,163	40,163
21-13-2	CLEARING & GRUBBING	CUT, STOCKPILE & FILL	9,500	CY			1,202	163.00	195,885	195,885
	21-13 Total						1,448		236,048	236,048
21-51	MISCELLANEOUS									
21-51-1	PIPE TRENCH	6" PIPE, 4' BURIAL AND BEDDING	130	LF		724	44	68.73	3,047	3,771
21-51-2	PIPE TRENCH	2" PIPE, 4' BURIAL AND BEDDING	130	LF		540	37	68.73	2,555	3,095
	21-51 Total					1,264	82		5,602	6,866
21-53	PILING & CAISSON									
21-53-1	AUGER CAST PILES 18" DIA. X 70' LONG, SUBCONTRACTOR COST INCLUDES LABOR	ABSORBER TOWER FOUNDATION	140	EA	448,000			102.76		448,000
21-53-2	AUGER CAST PILES 18" DIA. X 70' LONG, SUBCONTRACTOR COST INCLUDES LABOR	PUMP BLOWER BUILDING, ABSORBER AREA	101	EA	321,600			102.76		321,600
21-53-3	AUGER CAST PILES 18" DIA. X 70' LONG, SUBCONTRACTOR COST INCLUDES LABOR	DUCT SUPPORTS FOUNDATION	90	EA	288,000			102.76		288,000
21-53-4	AUGER CAST PILES 18" DIA. X 70' LONG, SUBCONTRACTOR COST INCLUDES LABOR	CHIMNEY SUBSTRUCTURE	120	EA	384,000			102.76		384,000
21-53-5	AUGER CAST PILES 18" DIA. X 70' LONG, SUBCONTRACTOR COST INCLUDES LABOR	PIPE RACK	60	EA	192,000			102.76		192,000
21-53-6	MOB/DEMOB & TEST PILE	INCLUDED IN UNIT 1&2 COMMON FACILITIES ESTIMATE		EA				102.76		
	21-53 Total				1,633,600					1,633,600
21-57	ROAD, PARKING AREA, & SURFACED AREA									
21-57-1	CRUSHED ROCK SURFACING, 12"		33,350	SY		390,195	734	90.75	66,583	456,778
21-57-2	ROADWAY 24' WIDE 4" ASPHALT		1,250	FT		207,500	1,636	77.65	127,055	334,555
	21-57 Total					597,695	2,370		193,638	791,333
21-99	STORM SEWER		1	LT		55,000	1,100	85.55	94,105	149,105
	21-99 Total					55,000	1,100		94,105	149,105
	21 Total				1,633,600	653,959	5,000		529,394	2,816,952

ESTIMATE NO. : 31252A
PROJECT NO. : 12681-006
ISSUE DATE : 09/01/2011
PREP/REV : AT/BJD
APPROVED : MNO

NPPD
GERALD GENTLEMAN STATION UNIT 2 ABSORBER AREA
WET FGD
CONCEPTUAL COST ESTIMATE

SARGENT & LUNDY

PRICE LEVEL: 2011 LOCATION: Omaha, NE WAGE RATE: 11NEOMA PRODUCTIVITY FACTOR: 1.1

CODE OF ACCOUNT	DESCRIPTION A	DESCRIPTION B	QTY	UM	EQUIPMENT COST	MATERIAL COST	MAN-HOURS	CREW WAGE RATE	LABOR COST	TOTAL COST
22	**CONCRETE**									
22-13	CONCRETE									
22-13-1	CONCRETE (INCLUDES REBAR, FORMWORK, EMBEDMENTS & EARTHWORK)	ABSORBER TOWER FOUNDATION	1,100	CY		236,500	8,470	66.22	560,883	797,383
22-13-2	CONCRETE (INCLUDES REBAR, FORMWORK, EMBEDMENTS & EARTHWORK)	PUMP BLOWER BUILDING, ABSORBER AREA	1,670	CY		359,050	12,859	66.22	851,523	1,210,573
22-13-3	CONCRETE (INCLUDES REBAR, FORMWORK, EMBEDMENTS & EARTHWORK)	DUCT SUPPORTS FOUNDATION	400	CY		86,000	5,280	66.22	349,642	435,642
22-13-4	CONCRETE (INCLUDES REBAR, FORMWORK, EMBEDMENTS & EARTHWORK)	CHIMNEY FDN	2,600	CY		559,000	20,020	66.22	1,325,724	1,884,724
22-13-5	CONCRETE (INCLUDES REBAR, FORMWORK, EMBEDMENTS & EARTHWORK)	PIPE RACK	500	CY		107,500	6,600	66.22	437,052	544,552
22-13-6	CONCRETE (INCLUDES REBAR, FORMWORK, EMBEDMENTS & EARTHWORK)	ELEVATOR FOUNDATION	20	CY		4,300	198	66.22	13,112	17,412
	22-13 Total					1,352,350	53,427		3,537,936	4,890,286
	22 Total					1,352,350	53,427		3,537,936	4,890,286
23	**STEEL**									
23-15	DUCTWORK									
23-15-1	DUCTWORK PANEL SECTIONS, INCL DUCT PLATE, STIFFENERS, INTERNAL TRUSSES, TURNING VANES	ID FAN OUTLET TO BOOSTER FAN INLET	600	TN		1,950,000	39,600	107.38	4,252,248	6,202,248
23-15-2	DUCTWORK PANEL SECTIONS, INCL DUCT PLATE, STIFFENERS, INTERNAL TRUSSES, TURNING VANES	BOOSTER FAN TO SCRUBBER	300	TN		975,000	19,800	107.38	2,126,124	3,101,124
23-15-3	DUCTWORK, FRP 32' DIAMETER X 200'	SCRUBBER TO CHIMNEY	20,096	SF		3,476,608	3,095	107.38	332,318	3,808,926
	23-15 Total					6,401,608	62,495		6,710,690	13,112,298
23-17	GALLERY									
23-17-1	GRATING	PUMP BLOWER BUILDING	3,333	SF		43,996	733	80.14	58,763	102,759
23-17-2	STAIRS	PUMP BLOWER BUILDING	2,000	SF		180,400	2,530	80.14	202,754	383,154
23-17-3	HANDRAIL AND GUARDPLATE	PUMP BLOWER BUILDING	2,500	LF		90,750	1,513	80.14	121,212	211,962
23-17-4	LADDERS	PUMP BLOWER BUILDING	667	LF		58,696	587	80.14	47,039	105,735
23-17-5	SWING GATES	PUMP BLOWER BUILDING	33	EA		9,075	145	80.14	11,636	20,711
	23-17 Total					382,917	5,508		441,405	824,321
23-25	ROLLED SHAPE									
23-25-1	ROLLED SHAPE	PUMP BLOWER BUILDING	500	TN		1,230,000	8,800	100.22	881,936	2,111,936
23-25-2	ROLLED SHAPE	PUMP BLOWER BUILDING GALLERY SUPPORT STEEL	167	TN		410,820	2,939	100.22	294,567	705,387
23-25-3	ROLLED SHAPE	MISCELLANEOUS STRUCTURAL STEEL, ABSORBER AREA	100	TN		246,000	1,760	100.22	176,387	422,387
23-25-4	ROLLED SHAPE	ID FAN OUTLET TO BOOSTER FAN INLET DUCT SUPPORTS	600	TN		1,476,000	10,560	100.22	1,058,323	2,534,323
23-25-5	ROLLED SHAPE	BOOSTER FAN TO SCRUBBER DUCT SUPPORTS	100	TN		246,000	1,760	100.22	176,387	422,387

ESTIMATE NO. : 31252A
PROJECT NO. : 12681-006
ISSUE DATE : 09/01/2011
PREP/REV : AT/BJD
APPROVED : MNO

NPPD
GERALD GENTLEMAN STATION UNIT 2 ABSORBER AREA
WET FGD
CONCEPTUAL COST ESTIMATE

SARGENT & LUNDY

PRICE LEVEL: 2011 LOCATION: Omaha, NE WAGE RATE: 11NEOMA PRODUCTIVITY FACTOR: 1.1

CODE OF ACCOUNT	DESCRIPTION A	DESCRIPTION B	QTY	UM	EQUIPMENT COST	MATERIAL COST	MAN-HOURS	CREW WAGE RATE	LABOR COST	TOTAL COST
23-25-6	ROLLED SHAPE	SCRUBBER TO CHIMNEY DUCT SUPPORTS	200	TN		492,000	3,520	100.22	352,774	844,774
23-25-7	ROLLED SHAPE	PIPE RACK STRUCTURAL STEEL	300	TN		783,000	5,610	100.22	562,234	1,345,234
	23-25 Total					4,883,820	34,949		3,502,609	8,386,429
	23 Total					11,668,345	102,952		10,654,703	22,323,048
24	**ARCHITECTURAL**									
24-15	DOOR (INCL. FRAME & HARDWARE)									
24-15-1	MANDOORS	PUMP BLOWER BUILDING	3	EA		4,485	26	58.89	1,555	6,040
24-15-2	ROLLUP DOOR	PUMP BLOWER BUILDING	1	EA		16,500	44	58.89	2,591	19,091
	24-15 Total					20,985	70		4,146	25,131
24-17	ELEVATOR									
24-17-1	ELEVATOR	RACK & PINION	1	EA	350,000		1,375	90.42	124,328	474,328
	24-17 Total				350,000		1,375		124,328	474,328
24-37	ROOFING									
24-37-1	INSULATED METAL ROOFING	PUMP BLOWER BUILDING	14,000	SF		206,920	1,371	67.38	92,351	299,271
	24-37 Total					206,920	1,371		92,351	299,271
24-41	SIDING									
24-41-1	INSULATED METAL SIDING	PUMP BLOWER BUILDING	24,000	SF		354,720	2,350	88.05	206,882	561,602
	24-41 Total					354,720	2,350		206,882	561,602
	24 Total				350,000	582,625	5,166		427,707	1,360,332
25	**CONCRETE CHIMNEY & STACK**									
25-13	CONCRETE CHIMNEY	CHIMNEY STRUCTURE, CONCRETE W SINGLE FRP LINER, 550' HIGH - HAMON CUSTODIS BUDGETARY QUOTE	1	EA	12,843,000					12,843,000
	25-13 Total				12,843,000					12,843,000
	25 Total				12,843,000					12,843,000
27	**PAINTING & COATING**									
27-17	PAINTING									
27-17-1	TOUCH-UP PAINTING	PUMP BLOWER BUILDING	28,000	SF		28,000	616	65.85	40,564	68,564
	27-17 Total					28,000	616		40,564	68,564
	27 Total					28,000	616		40,564	68,564
31	**MECHANICAL EQUIPMENT**									
31-27	DAMPERS & ACCESSORIES									

ESTIMATE NO. : 31252A
PROJECT NO. : 12681-006
ISSUE DATE : 09/01/2011
PREP/REV : AT/BJD
APPROVED : MNO

SARGENT & LUNDY

NPPD
GERALD GENTLEMAN STATION UNIT 2 ABSORBER AREA
WET FGD
CONCEPTUAL COST ESTIMATE

PRICE LEVEL: 2011 LOCATION: Omaha, NE WAGE RATE: 11NEOMA PRODUCTIVITY FACTOR: 1.1

CODE OF ACCOUNT	DESCRIPTION A	DESCRIPTION B	QTY	UM	EQUIPMENT COST	MATERIAL COST	MAN-HOURS	CREW WAGE RATE	LABOR COST	TOTAL COST
31-27-1	DAMPERS	BOOSTER FANS - BASED ON THE ESTIMATED ADDITIONAL COST PROVIDED BY TLT BABCOCK	2	EA	160,000		858	107.38	92,132	252,132
	31-27 Total				160,000		858		92,132	252,132
31-33	EXPANSION JOINT									
31-33-1	EXPANSION JOINT	ID FAN OUTLET TO BOOSTER FAN INLET	1,100	LF		275,000	2,420	107.38	259,860	534,860
31-33-2	EXPANSION JOINT	BOOSTER FAN TO SCRUBBER	230	LF		57,500	506	107.38	54,334	111,834
31-33-3	EXPANSION JOINT	SCRUBBER TO CHIMNEY	320	LF		80,000	704	107.38	75,596	155,596
	31-33 Total					412,500	3,630		389,789	802,289
31-41	FIRE PROTECTION EQUIPMENT & SYSTEM									
31-41-1	FIRE PROTECTION EQUIPMENT & SYSTEM	PUMP BLOWER BUILDING	28,000	SF		140,000	2,064	83.48	172,269	312,269
	31-41 Total					140,000	2,064		172,269	312,269
31-45	FLUE GAS CLEANUP, FGD EQUIPMENT							83.48		
31-45-1	ABSORBER AREA SYSTEM	BASED ON BABCOCK POWER BUGETARY EQUIPMENT PRICE. INCLUDES ABSORBER VESSEL ERECTION. LABOR COST IS FOR MECHANICAL EQUIPMENT ERECTION	1	LS	41,652,000		184,800	83.48	15,427,104	57,079,104
	31-45 Total				41,652,000		184,800		15,427,104	57,079,104
31-75	PUMP									
31-75-1	PUMP	QUENCH PUMPS	1	LT	165,000		880	82.12	72,266	237,266
	31-75 Total				165,000		880		72,266	237,266
31-99	MODEL STUDIES		1	EA	132,000			83.48		132,000
	31-99 Total				132,000					132,000
	31 Total				42,109,000	552,500	192,232		16,153,560	58,815,060
34	**HVAC**									
34-99	HVAC	PUMP BLOWER BUILDING	28,000	SF		280,000	4,620	75.59	349,226	629,226
	34-99 Total					280,000	4,620		349,226	629,226
	34 Total					280,000	4,620		349,226	629,226
35	**PIPING**									
35-13	LARGE BORE PIPING									
35-13-1	6" CS SCH 40, HT, INSULATED PIPING	ABOVE GROUND PIPING	1,380	LF		51,474	2,444	90.17	220,374	271,848
35-13-2	6" CS SCH 40 PIPING	ABOVE GROUND PIPING	130	LF		4,849	230	90.17	20,760	25,609
35-13-3	6" FRP PIPING	ABOVE GROUND PIPING	1,630	LF		99,919	1,255	90.17	113,172	213,091

ESTIMATE NO. : 31252A
PROJECT NO. : 12681-006
ISSUE DATE : 09/01/2011
PREP/REV : AT/BJD
APPROVED : MNO

NPPD
GERALD GENTLEMAN STATION UNIT 2 ABSORBER AREA
WET FGD
CONCEPTUAL COST ESTIMATE

SARGENT & LUNDY

PRICE LEVEL: 2011 LOCATION: Omaha, NE WAGE RATE: 11NEOMA PRODUCTIVITY FACTOR: 1.1

CODE OF ACCOUNT	DESCRIPTION A	DESCRIPTION B	QTY	UM	EQUIPMENT COST	MATERIAL COST	MAN-HOURS	CREW WAGE RATE	LABOR COST	TOTAL COST
35-13-4	6" HDPE, SDR 9 PIPING	BURIED PIPING	130	LF		1,053	99	85.55	8,441	9,494
35-13-5	4" FRP PIPING	ABOVE GROUND PIPING	2,510	LF		138,552	1,132	90.17	102,073	240,625
35-13-6	3" CS SCH 40 PIPING	ABOVE GROUND PIPING	1,260	LF		24,696	1,857	90.17	167,467	192,163
35-13-7	2.5" FRP PIPING	ABOVE GROUND PIPING	60	LF		3,006	22	90.17	1,964	4,970
35-13-8	VALVES	6" SS GATE VALVE , FLANGED, 150LB	3	EA		10,650	53	90.17	4,761	15,411
35-13-9	VALVES	6" CI POST INDICATOR 250LB, MECHANICAL JOINT WITH BOXES	3	EA		2,115	13	90.17	1,190	3,305
35-13-10	VALVES	4" SS GATE VALVE , FLANGED, 150LB	4	EA		8,200	53	90.17	4,801	13,001
35-13-11	VALVES	3" VALVES FOR SERVICE WATER ISOLATION	40	EA		40,000	343	90.17	30,946	70,946
35-13-12	VALVES	3" VALVES FOR SERVICE AIR ISOLATION	40	EA		40,000	343	90.17	30,946	70,946
	35-13 Total					424,514	7,845		706,896	1,131,410
35-15	SMALL BORE PIPING							90.17		
35-15-1	2" CS SCH 80 PIPING	ABOVE GROUND PIPING	325	LF		7,248	408	90.17	36,749	43,996
35-15-2	2" CS/RL SCH 40 PIPING	ABOVE GROUND PIPING	130	LF		3,796	44	90.17	3,997	7,793
35-15-3	2" SS 304 SCH 40 PIPING	ABOVE GROUND PIPING	1,130	LF		58,195	1,790	90.17	161,397	219,592
35-15-4	2" CS SCH 80 PIPING	BURIED PIPING	130	LF		3,458	103	90.17	9,284	12,742
35-15-5	1" SS 304 SCH 40S PIPING	ABOVE GROUND PIPING	130	LF		2,626	162	90.17	14,571	17,197
35-15-6	VALVES	2" SS VALVES FOR INSTRUMENT AIR ISOLATION	200	EA		169,000	160	90.17	14,422	183,422
	35-15 Total					244,323	2,666		240,419	484,742
35-99	BOP PIPING & VALVES	FOR QUENCH PUMPS	1	LT		55,000	906	90.17	81,730	136,730
	35-99 Total					55,000	906		81,730	136,730
	35 Total					723,837	11,417		1,029,046	1,752,882
36	**INSULATION**									
36-13	INSULATION, DUCT & EQUIPMENT									
36-13-1	MINERAL WOOL INSULATION 4" THK, 8 LB/CF DENSITY, ALUMINUM LAGGING - INSTALLED IN PLACE	ID FAN OUTLET TO BOOSTER FAN INLET	52,000	SF		780,000	17,160	75.33	1,292,663	2,072,663
36-13-2	MINERAL WOOL INSULATION 4" THK, 8 LB/CF DENSITY, ALUMINUM LAGGING - INSTALLED IN PLACE	BOOSTER FAN TO SCRUBBER	25,000	SF		375,000	8,250	75.33	621,473	996,473
	36-13 Total					1,155,000	25,410		1,914,135	3,069,135
36-15	INSULATION, PIPE									
36-15-1	INSULATION, PIPE	3" CAL SIL INSULATION FOR 6" PIPE	1,380	LF		39,144	758	58.25	44,168	83,311
	36-15 Total					39,144	758		44,168	83,311
	36 Total					1,194,144	26,168		1,958,303	3,152,447

ESTIMATE NO. : 31252A
PROJECT NO. : 12681-006
ISSUE DATE : 09/01/2011
PREP/REV : AT/BJD
APPROVED : MNO

NPPD
GERALD GENTLEMAN STATION UNIT 2 ABSORBER AREA
WET FGD
CONCEPTUAL COST ESTIMATE

SARGENT & LUNDY

PRICE LEVEL: 2011 LOCATION: Omaha, NE WAGE RATE: 11NEOMA PRODUCTIVITY FACTOR: 1.1

CODE OF ACCOUNT	DESCRIPTION A	DESCRIPTION B	QTY	UM	EQUIPMENT COST	MATERIAL COST	MAN-HOURS	CREW WAGE RATE	LABOR COST	TOTAL COST
41	**ELECTRICAL EQUIPMENT**									
41-37	LIGHTING ACCESSORY (FIXTURE)									
41-37-1	LIGHTING ACCESSORY (FIXTURE)	PUMP BLOWER BUILDING	28,000	SF		280,000	4,620	64.73	299,053	579,053
	41-37 Total					280,000	4,620		299,053	579,053
41-41	ELECTRICAL MISCELLANEOUS	INCLUDED IN AUX POWER & FAN ESTIMATE	1	EA				68.77		
	41-41 Total									
	41 Total					280,000	4,620		299,053	579,053
44	**CONTROL & INSTRUMENTATION**									
44-23	INSTRUMENTATION MISCELLANEOUS	INCLUDED IN UNIT 1&2 COMMON FACILITIES ESTIMATE	1	EA				76.60		
	44-23 Total									
	44 Total									
90	SUBTOTAL DIRECT & CONSTRUCTION INDIRECT COST				56,935,600	17,463,358	407,273		35,093,423	109,492,381
91	OTHER DIRECT & CONSTRUCTION INDIRECT COST									
91-1	SCAFFOLDING - % of ACCT NO. 90		2.5	%					1,313,920	1,313,920
91-2	COST DUE TO OVERTIME WORKING 5 -10 HOUR DAYS		1.0	EA			35,415		5,057,052	5,057,052
91-3	PER DIEM		10.0	$/HR					4,072,733	4,072,733
91-4	CONSUMABLES - % of ACCT NO. 90		0.5	%					262,784	262,784
91-5	FREIGHT ON MATERIAL - % of ACCT NO. 90		5.0	%		873,168				873,168
91-6	FREIGHT ON EQUIPMENT - % of ACCT NO. 90		5.0	%	2,846,780					2,846,780
91-7	SALES TAX - % of ACCT NO. 90 MATERIAL & EQUIPMENT SHOWN ON MATERIAL COLUMN		5.5	%		4,091,943				4,091,943
91-8	MOBILIZATION/DEMOBILIZATION - % OF ACCT NO. 90		1.0	%					350,934	350,934
91-9	CONTRACTOR'S GENERAL AND ADMINISTRATION EXPENSE - % of ACCT NO. 90, 91-1 TO 91-8		10.0	%		2,242,847			4,615,085	6,857,931
91-10	CONTRACTOR'S PROFIT - % of ACCT NO. 90, 91-1 TO 91-8		5.0	%		1,121,423			2,307,542	3,428,966
	91 - SUBTOTAL				2,846,780	8,329,381			17,980,050	29,156,211
92	TOTAL DIRECT & CONSTRUCTION INDIRECT COST				59,782,380	25,792,739	442,688		53,073,472	138,648,592
93	INDIRECT COST									
93-1	ENGINEERING, PROCUREMENT, & PROJECT SERVICES - NOT INCLUDED	INCLUDED IN UNIT 1&2 COMMON FACILITIES								

ESTIMATE NO. : 31252A
PROJECT NO. : 12681-006
ISSUE DATE : 09/01/2011
PREP/REV : AT/BJD
APPROVED : MNO

SARGENT & LUNDY

NPPD
GERALD GENTLEMAN STATION UNIT 2 ABSORBER AREA
WET FGD
CONCEPTUAL COST ESTIMATE

PRICE LEVEL: 2011 LOCATION: Omaha, NE WAGE RATE: 11NEOMA PRODUCTIVITY FACTOR: 1.1

CODE OF ACCOUNT	DESCRIPTION A	DESCRIPTION B	QTY	UM	EQUIPMENT COST	MATERIAL COST	MAN-HOURS	CREW WAGE RATE	LABOR COST	TOTAL COST
93-2	CONSTRUCTION MANAGEMENT SUPPORT - % of ACCT NO. 92		1.5	%						2,079,729
93-3	S-U / COMMISSIONING - % of ACCT NO. 92		1.0	%						1,386,486
93-4	SPARE PARTS - % of ACCT NO. 92 EQUIPMENT		3.0	%						1,793,471
93-5	OWNERS COST - % of ACCT NOS. 92, 93.1, 93.2, 93.3, 93.4		2.0	%						2,878,166
93-6	EPC FEE - % of ACCT NOS. 92, 93.1, 93.2, 93.3, 93.4		15.0	%						21,586,242
	93 - TOTAL									29,724,093
94	TOTAL ESCALATION									19,051,251
94-1	ESCALATION ON EQUIPMENT - % of ACCT NO. 92		9.5	%	5,684,411					5,684,411
94-2	ESCALATION ON MATERIAL - % of ACCT NO. 92		11.7	%		3,010,624				3,010,624
94-3	ESCALATION ON LABOR - % of ACCT NO. 92		13.0	%					6,884,137	6,884,137
94-4	ESCALATION ON INDIRECT - % of ACCT NO. 93		11.7	%						3,472,078
95	TOTAL CONTINGENCY									37,484,787
95-1	CONTINGENCY ON EQUIPMENT - % of ACCT NO. 92, 94.1		20.0	%	13,093,358					13,093,358
95-2	CONTINGENCY ON MATERIAL - % of ACCT NO. 92, 94.2		20.0	%		5,760,673				5,760,673
95-3	CONTINGENCY ON LABOR - % of ACCT NO. 92, 94.3		20.0	%					11,991,522	11,991,522
95-4	CONTINGENCY ON INDIRECT - % of ACCT NO. 93, 94.4		20.0	%						6,639,234
96	TOTAL CONSTRUCTION COST									224,908,723
97	INTEREST DURING CONSTRUCTION (COMPOUNDED MONTHLY)									24,924,109
98	TOTAL PROJECT COST									249,832,833

H:\INFODIV\PROJECTS\Nebraska Public Power District\Gerald Gentlemen - Wet FGD\[31252A2 - Gerald Gentleman Stati EXCEL VERSION 012711

ESTIMATE NO. : 31252A
PROJECT NO. : 12681-006
ISSUE DATE : 09/01/2011
PREP/REV : AT/BJD
APPROVED : MNO

SARGENT & LUNDY

NPPD
GERALD GENTLEMAN STATION UNIT 2 ABSORBER AREA
WET FGD
CASH FLOW REPORT

PRICE LEVEL 2011

CASH FLOW BY MONTH

		JAN-2011	FEB-2011	MAR-2011	APR-2011	MAY-2011	JUN-2011	JUL-2011	AUG-2011	SEP-2011	OCT-2011	NOV-2011	DEC-2011
TOTAL CONSTRUCTION COST	M	0	0	0	0	0	0	0	0	0	0	0	0
TOTAL CONSTRUCTION COST	C	0	0	0	0	0	0	0	0	0	0	0	0
INTEREST DURING CONSTRUCTION	M	0	0	0	0	0	0	0	0	0	0	0	0
INTEREST DURING CONSTRUCTION	C	0	0	0	0	0	0	0	0	0	0	0	0
TOTAL	M	0	0	0	0	0	0	0	0	0	0	0	0
TOTAL	C	0	0	0	0	0	0	0	0	0	0	0	0

		JAN-2012	FEB-2012	MAR-2012	APR-2012	MAY-2012	JUN-2012	JUL-2012	AUG-2012	SEP-2012	OCT-2012	NOV-2012	DEC-2012
TOTAL CONSTRUCTION COST	M	21,850,183	0	0	0	0	0	0	0	0	0	0	0
TOTAL CONSTRUCTION COST	C	21,850,183	21,850,183	21,850,183	21,850,183	21,850,183	21,850,183	21,850,183	21,850,183	21,850,183	21,850,183	21,850,183	21,850,183
INTEREST DURING CONSTRUCTION	M	91,115	91,495	91,877	92,260	92,645	93,031	93,419	93,808	94,200	94,592	94,987	95,383
INTEREST DURING CONSTRUCTION	C	91,115	182,610	274,487	366,747	459,392	552,423	645,841	739,650	833,850	928,442	1,023,429	1,118,812
TOTAL	M	21,941,298	91,495	91,877	92,260	92,645	93,031	93,419	93,808	94,200	94,592	94,987	95,383
TOTAL	C	21,941,298	22,032,793	22,124,670	22,216,930	22,309,574	22,402,605	22,496,024	22,589,833	22,684,032	22,778,625	22,873,612	22,968,995

		JAN-2013	FEB-2013	MAR-2013	APR-2013	MAY-2013	JUN-2013	JUL-2013	AUG-2013	SEP-2013	OCT-2013	NOV-2013	DEC-2013
TOTAL CONSTRUCTION COST	M	61,154,379	0	0	0	0	0	0	0	0	0	0	0
TOTAL CONSTRUCTION COST	C	83,004,562	83,004,562	83,004,562	83,004,562	83,004,562	83,004,562	83,004,562	83,004,562	83,004,562	83,004,562	83,004,562	83,004,562
INTEREST DURING CONSTRUCTION	M	350,794	352,257	353,726	355,201	356,682	358,170	359,663	361,163	362,669	364,182	365,700	367,225
INTEREST DURING CONSTRUCTION	C	1,469,606	1,821,863	2,175,590	2,530,791	2,887,473	3,245,643	3,605,306	3,966,470	4,329,139	4,693,320	5,058,021	5,426,246
TOTAL	M	61,505,174	352,257	353,726	355,201	356,682	358,170	359,663	361,163	362,669	364,182	365,700	367,225
TOTAL	C	84,474,168	84,826,425	85,180,152	85,535,353	85,892,035	86,250,205	86,609,868	86,971,032	87,333,701	87,697,882	88,063,583	88,430,808

		JAN-2014	FEB-2014	MAR-2014	APR-2014	MAY-2014	JUN-2014	JUL-2014	AUG-2014	SEP-2014	OCT-2014	NOV-2014	DEC-2014
TOTAL CONSTRUCTION COST	M	93,488,264	0	0	0	0	0	0	0	0	0	0	0
TOTAL CONSTRUCTION COST	C	176,490,826	176,490,826	176,490,826	176,490,826	176,490,826	176,490,826	176,490,826	176,490,826	176,490,826	176,490,826	176,490,826	176,490,826
INTEREST DURING CONSTRUCTION	M	758,594	761,758	764,934	768,124	771,327	774,543	777,773	781,017	784,273	787,544	790,828	794,126
INTEREST DURING CONSTRUCTION	C	6,184,840	6,946,597	7,711,531	8,479,655	9,250,982	10,025,526	10,803,299	11,584,315	12,368,589	13,156,132	13,946,960	14,741,086
TOTAL	M	94,244,859	761,758	764,934	768,124	771,327	774,543	777,773	781,017	784,273	787,544	790,828	794,126
TOTAL	C	182,675,666	183,437,424	184,202,358	184,970,482	185,741,809	186,516,352	187,294,125	188,075,142	188,859,415	189,646,959	190,437,787	191,231,912

		JAN-2015	FEB-2015	MAR-2015	APR-2015	MAY-2015	JUN-2015	JUL-2015	AUG-2015	SEP-2015	OCT-2015	NOV-2015	DEC-2015
TOTAL CONSTRUCTION COST	M	48,417,697	0	0	0	0	0	0	0	0	0	0	0
TOTAL CONSTRUCTION COST	C	224,908,723	224,908,723	224,908,723	224,908,723	224,908,723	224,908,723	224,908,723	224,908,723	224,908,723	224,908,723	224,908,723	224,908,723
INTEREST DURING CONSTRUCTION	M	999,340	1,003,507	1,007,692	1,011,894	1,016,113	1,020,350	1,024,605	1,028,878	1,033,168	1,037,477	0	0
INTEREST DURING CONSTRUCTION	C	15,740,425	16,743,932	17,751,624	18,763,516	19,779,631	20,799,981	21,824,587	22,853,464	23,886,633	24,924,109	24,924,109	24,924,109
TOTAL	M	49,417,237	1,003,507	1,007,692	1,011,894	1,016,113	1,020,350	1,024,605	1,028,878	1,033,168	1,037,477	0	0
TOTAL	C	240,649,149	241,652,656	242,660,347	243,672,241	244,688,354	245,708,705	246,733,310	247,762,188	248,795,356	249,832,833	249,832,833	249,832,833

ESTIMATE NO. : 31252A
PROJECT NO. : 12681-006
ISSUE DATE : 09/01/2011
PREP/REV : AT/BJD
APPROVED : MNO

SARGENT & LUNDY

NPPD
GERALD GENTLEMAN STATION UNIT 2 ABSORBER AREA
WET FGD
CASH FLOW REPORT

PRICE LEVEL 2011

CASH FLOW BY MONTH

		JAN-2016	FEB-2016	MAR-2016	APR-2016	MAY-2016	JUN-2016	JUL-2016	AUG-2016	SEP-2016	OCT-2016	NOV-2016	DEC-2016
TOTAL CONSTRUCTION COST	M	0	0	0	0	0	0	0	0	0	0	0	0
TOTAL CONSTRUCTION COST	C	224,908,723	224,908,723	224,908,723	224,908,723	224,908,723	224,908,723	224,908,723	224,908,723	224,908,723	224,908,723	224,908,723	224,908,723
INTEREST DURING CONSTRUCTION	M	0	0	0	0	0	0	0	0	0	0	0	0
INTEREST DURING CONSTRUCTION	C	24,924,109	24,924,109	24,924,109	24,924,109	24,924,109	24,924,109	24,924,109	24,924,109	24,924,109	24,924,109	24,924,109	24,924,109
TOTAL	M	0	0	0	0	0	0	0	0	0	0	0	0
TOTAL	C	249,832,833	249,832,833	249,832,833	249,832,833	249,832,833	249,832,833	249,832,833	249,832,833	249,832,833	249,832,833	249,832,833	249,832,833

		JAN-2017	FEB-2017	MAR-2017	APR-2017	MAY-2017	JUN-2017	JUL-2017	AUG-2017	SEP-2017	OCT-2017	NOV-2017	DEC-2017
TOTAL CONSTRUCTION COST	M	0	0	0	0	0	0	0	0	0	0	0	0
TOTAL CONSTRUCTION COST	C	224,908,723	224,908,723	224,908,723	224,908,723	224,908,723	224,908,723	224,908,723	224,908,723	224,908,723	224,908,723	224,908,723	224,908,723
INTEREST DURING CONSTRUCTION	M	0	0	0	0	0	0	0	0	0	0	0	0
INTEREST DURING CONSTRUCTION	C	24,924,109	24,924,109	24,924,109	24,924,109	24,924,109	24,924,109	24,924,109	24,924,109	24,924,109	24,924,109	24,924,109	24,924,109
TOTAL	M	0	0	0	0	0	0	0	0	0	0	0	0
TOTAL	C	249,832,833	249,832,833	249,832,833	249,832,833	249,832,833	249,832,833	249,832,833	249,832,833	249,832,833	249,832,833	249,832,833	249,832,833

		JAN-2018	FEB-2018	MAR-2018	APR-2018	MAY-2018	JUN-2018	JUL-2018	AUG-2018	SEP-2018	OCT-2018	NOV-2018	DEC-2018
TOTAL CONSTRUCTION COST	M	0	0	0	0	0	0	0	0	0	0	0	0
TOTAL CONSTRUCTION COST	C	224,908,723	224,908,723	224,908,723	224,908,723	224,908,723	224,908,723	224,908,723	224,908,723	224,908,723	224,908,723	224,908,723	224,908,723
INTEREST DURING CONSTRUCTION	M	0	0	0	0	0	0	0	0	0	0	0	0
INTEREST DURING CONSTRUCTION	C	24,924,109	24,924,109	24,924,109	24,924,109	24,924,109	24,924,109	24,924,109	24,924,109	24,924,109	24,924,109	24,924,109	24,924,109
TOTAL	M	0	0	0	0	0	0	0	0	0	0	0	0
TOTAL	C	249,832,833	249,832,833	249,832,833	249,832,833	249,832,833	249,832,833	249,832,833	249,832,833	249,832,833	249,832,833	249,832,833	249,832,833

		JAN-2019	FEB-2019	MAR-2019	APR-2019	MAY-2019	JUN-2019	JUL-2019	AUG-2019	SEP-2019	OCT-2019	NOV-2019	DEC-2019
TOTAL CONSTRUCTION COST	M	0	0	0	0	0	0	0	0	0	0	0	0
TOTAL CONSTRUCTION COST	C	224,908,723	224,908,723	224,908,723	224,908,723	224,908,723	224,908,723	224,908,723	224,908,723	224,908,723	224,908,723	224,908,723	224,908,723
INTEREST DURING CONSTRUCTION	M	0	0	0	0	0	0	0	0	0	0	0	0
INTEREST DURING CONSTRUCTION	C	24,924,109	24,924,109	24,924,109	24,924,109	24,924,109	24,924,109	24,924,109	24,924,109	24,924,109	24,924,109	24,924,109	24,924,109
TOTAL	M	0	0	0	0	0	0	0	0	0	0	0	0
TOTAL	C	249,832,833	249,832,833	249,832,833	249,832,833	249,832,833	249,832,833	249,832,833	249,832,833	249,832,833	249,832,833	249,832,833	249,832,833

		JAN-2020	FEB-2020	MAR-2020	APR-2020	MAY-2020	JUN-2020	JUL-2020	AUG-2020	SEP-2020	OCT-2020	NOV-2020	DEC-2020
TOTAL CONSTRUCTION COST	M	0	0	0	0	0	0	0	0	0	0	0	0
TOTAL CONSTRUCTION COST	C	224,908,723	224,908,723	224,908,723	224,908,723	224,908,723	224,908,723	224,908,723	224,908,723	224,908,723	224,908,723	224,908,723	224,908,723
INTEREST DURING CONSTRUCTION	M	0	0	0	0	0	0	0	0	0	0	0	0
INTEREST DURING CONSTRUCTION	C	24,924,109	24,924,109	24,924,109	24,924,109	24,924,109	24,924,109	24,924,109	24,924,109	24,924,109	24,924,109	24,924,109	24,924,109
TOTAL	M	0	0	0	0	0	0	0	0	0	0	0	0
TOTAL	C	249,832,833	249,832,833	249,832,833	249,832,833	249,832,833	249,832,833	249,832,833	249,832,833	249,832,833	249,832,833	249,832,833	249,832,833

ESTIMATE NO. : 31252A
PROJECT NO. : 12681-006
ISSUE DATE : 09/01/2011
PREP/REV : AT/BJD
APPROVED : MNO

SARGENT & LUNDY

NPPD
GERALD GENTLEMAN STATION UNIT 2 ABSORBER AREA
WET FGD
CASH FLOW REPORT

PRICE LEVEL 2011

CASH FLOW BY YEAR

		2011	2012	2013	2014	2015	2016	2017	2018	2019	2020
TOTAL CONSTRUCTION COST	A	0	21,850,183	61,154,379	93,486,264	48,417,897	0	0	0	0	0
TOTAL CONSTRUCTION COST	C	0	21,850,183	83,004,562	176,490,826	224,908,723	224,908,723	224,908,723	224,908,723	224,908,723	224,908,723
INTEREST DURING CONSTRUCTION	A	0	1,118,812	4,307,434	9,314,840	10,183,024	0	0	0	0	0
INTEREST DURING CONSTRUCTION	C	0	1,118,812	5,426,246	14,741,086	24,924,109	24,924,109	24,924,109	24,924,109	24,924,109	24,924,109
TOTAL	A	0	22,968,995	65,461,813	102,801,104	58,600,921	0	0	0	0	0
TOTAL	C	0	22,968,995	88,430,808	191,231,912	249,832,833	249,832,833	249,832,833	249,832,833	249,832,833	249,832,833

H:\INFOD\V\PROJECTS\Nebraska Public Power District\Gerald Gentlemen - Wet FGD\[31252A2 - Gerald Gentleman Station Unit 2 Absorber Area.xls]Summary Report

ESTIMATE NO. : 31250A
PROJECT NO. : 12681-006
ISSUE DATE : 09/01/2011
PREP/REV : AT/BJD
APPROVED :MON

SARGENT & LUNDY

NPPD
GERALD GENTLEMAN STATION UNIT 1&2 COMMON FACILITIES
WET FGD
CONCEPTUAL COST ESTIMATE

CODE OF ACCOUNT	DESCRIPTION A	EQUIPMENT COST	MATERIAL COST	LABOR COST	TOTAL COST
11 Total	DEMOLITION			335,083	335,083
21 Total	CIVIL WORK	2,077,500	694,188	1,508,282	4,279,970
22 Total	CONCRETE		3,067,620	8,914,113	11,981,733
23 Total	STEEL		10,150,096	7,539,826	17,689,922
24 Total	ARCHITECTURAL		4,076,353	2,610,433	6,686,786
27 Total	PAINTING & COATING		172,504	249,907	422,411
31 Total	MECHANICAL EQUIPMENT	40,895,850	162,000	23,356,162	64,414,012
33 Total	MATERIAL HANDLING EQUIPMENT	7,730,000		4,667,635	12,397,635
34 Total	HVAC	40,000			40,000
33 Total	MATERIAL HANDLING EQUIPMENT	18,202,856		2,748,946	20,951,802
34 Total	HVAC	1,320,000	270,000	1,691,251	3,281,251
35 Total	PIPING		2,816,250	3,665,461	6,481,711
36 Total	INSULATION		15,762	45,044	60,806
41 Total	ELECTRICAL EQUIPMENT	880,000	325,192	1,886,190	3,091,382
44 Total	CONTROL & INSTRUMENTATION	1,250,000		403,605	1,653,605
60 Total	CONSTRUCTION EQUIPMENT SUPPLEMENT				
90	SUBTOTAL DIRECT & CONSTRUCTION INDIRECT COST	72,396,206	21,749,965	59,621,938	153,768,108
91	OTHER DIRECT & CONSTRUCTION INDIRECT COST				
91-1	SCAFFOLDING - % of ACCT NO. 90			2,034,298	2,034,298
91-2	COST DUE TO OVERTIME WORKING 5 -10 HOUR DAYS			8,619,454	8,619,454
91-3	PER DIEM			7,238,826	7,238,826
91-4	CONSUMABLES - % of ACCT NO. 90			406,860	406,860
91-5	FREIGHT ON MATERIAL - % of ACCT NO. 90		1,087,498		1,087,498
91-6	FREIGHT ON EQUIPMENT - % of ACCT NO. 90	3,619,810			3,619,810
91-7	SALES TAX - % of ACCT NO. 90 MATERIAL & EQUIPMENT SHOWN ON MATERIAL COLUMN		5,178,039		5,178,039
91-8	MOBILIZATION/DEMOBILIZATION - % OF ACCT NO. 90			596,219	596,219
91-9	CONTRACTOR'S GENERAL AND ADMINISTRATION EXPENSE - % of ACCT NO. 90, 91-1 TO 91-8		2,801,550	7,851,759	10,653,310
91-10	CONTRACTOR'S PROFIT - % of ACCT NO. 90, 91-1 TO 91-8		1,400,775	3,925,880	5,326,655
	91 - SUBTOTAL	3,619,810	10,467,863	30,673,295	44,760,968
92	TOTAL DIRECT & CONSTRUCTION INDIRECT COST	76,016,016	32,217,827	90,295,233	198,529,076
93	INDIRECT COST				
93-1	ENGINEERING, PROCUREMENT, & PROJECT SERVICES - UNIT 1				12,600,000
93-2	ENGINEERING, PROCUREMENT, & PROJECT SERVICES - UNIT 2				8,820,000
93-3	ENGINEERING, PROCUREMENT, & PROJECT SERVICES FOR AUX POWER AND ID FANS - UNIT 1				1,890,000
93-4	ENGINEERING, PROCUREMENT, & PROJECT SERVICES FOR AUX POWER AND ID FANS - UNIT 2				1,260,000
93-5	CONSTRUCTION MANAGEMENT SUPPORT - % of ACCT NO. 92				2,977,936
93-6	S-U / COMMISSIONING - % of ACCT NO. 92				1,985,291
93-7	SPARE PARTS - % of ACCT NO. 92 EQUIPMENT				2,280,480
93-8	OWNERS ENGINEERING COST - UNIT 1				1,980,000
93-9	OWNERS ENGINEERING COST - UNIT 2				1,452,000
93-10	OWNERS BOND FEES @ 2.5% OF $200,000,000				5,000,000
93-11	OWNERS COST - % of ACCT NOS. 92, 93.1, 93.2, 93.3, 93.4				4,606,856
93-12	EPC FEE - % of ACCT NOS. 92, 93.1, 93.2, 93.3, 93.4				34,551,418

ESTIMATE NO. : 31250A
PROJECT NO. : 12681-006
ISSUE DATE : 09/01/2011
PREP/REV : AT/BJD
APPROVED :MON

SARGENT & LUNDY

NPPD
GERALD GENTLEMAN STATION UNIT 1&2 COMMON FACILITIES
WET FGD
CONCEPTUAL COST ESTIMATE

CODE OF ACCOUNT	DESCRIPTION A	EQUIPMENT COST	MATERIAL COST	LABOR COST	TOTAL COST
	93 - TOTAL				79,403,981
94	TOTAL ESCALATION				31,975,925
94-1	ESCALATION ON EQUIPMENT - % of ACCT NO. 92	7,227,987			7,227,987
94-2	ESCALATION ON MATERIAL - % of ACCT NO. 92		3,760,584		3,760,584
94-3	ESCALATION ON LABOR - % of ACCT NO. 92			11,712,156	11,712,156
94-4	ESCALATION ON INDIRECT - % of ACCT NO. 93				9,275,198
95	TOTAL CONTINGENCY				61,981,796
95-1	CONTINGENCY ON EQUIPMENT - % of ACCT NO. 92, 94.1	16,648,801			16,648,801
95-2	CONTINGENCY ON MATERIAL - % of ACCT NO. 92, 94.2		7,195,682		7,195,682
95-3	CONTINGENCY ON LABOR - % of ACCT NO. 92, 94.3			20,401,478	20,401,478
95-4	CONTINGENCY ON INDIRECT - % of ACCT NO. 93, 94.4				17,735,836
96	TOTAL CONSTRUCTION COST				371,890,778
97	INTEREST DURING CONSTRUCTION (COMPOUNDED MONTHLY)				40,315,474
98	TOTAL PROJECT COST				412,206,253

H:\INFODIV\PROJECTS\Nebraska Public Power District\Gerald G EXCEL VERSION 012711

ESTIMATE NO. : 31250A
PROJECT NO. : 12681-006
ISSUE DATE : 09/01/2011
PREP/REV : AT/BJD
APPROVED : MON

SARGENT & LUNDY

NPPD
GERALD GENTLEMAN STATION UNIT 1&2 COMMON FACILITIES
WET FGD
CONCEPTUAL COST ESTIMATE

PRICE LEVEL: 2011 LOCATION: Omaha, NE WAGE RATE: 11NEOMA PRODUCTIVITY FACTOR: 1.1

CODE OF ACCOUNT	DESCRIPTION A	DESCRIPTION B	QTY	UM	EQUIPMENT COST	MATERIAL COST	MAN-HOURS	CREW WAGE RATE	LABOR COST	TOTAL COST
11	**DEMOLITION**		1.1							
11-21	CIVIL WORK									
11-21-1	DISPOSAL, LOAD AND HAUL DEBRIS OFF SITE	DEMOLISH WAREHOUSE NO. 1 100'X120'X15'	2,000	CY			242	107.89	26,109	26,109
	11-21 Total						242		26,109	26,109
11-22	CONCRETE									
11-22-1	FOUNDATION DEMOLITION, REBAR REINFORCED	DEMOLISH WAREHOUSE NO. 1 100'X120'X15'	12,000	SF			1,122	107.89	121,053	121,053
	11-22 Total						1,122		121,053	121,053
11-23	STEEL									
11-23-1	STEEL BUILDING DEMOLITION, NO SALVAGE ALLOWANCE, NO DUMP FEES	DEMOLISH WAREHOUSE NO. 1 100'X120'X15'	180,000	CF			594	107.89	64,087	64,087
	11-23 Total						594		64,087	64,087
11-24	ARCHITECTURAL									
11-24-1	RELOCATION OF HYDROGEN BUILDING (40'X20'X15')		800	SF			1,144	100.22	114,652	114,652
11-24-2	RELOCATION OF TRANSFORMER OIL INTERCEPTORS (OIL/WATER SEPARATOR, BURRIED)		1	EA			110	83.48	9,183	9,183
	11-24 Total						1,254		123,834	123,834
	11 Total						3,212		335,083	335,083
21	**CIVIL WORK**									
21-13	CLEARING & GRUBBING									
21-13-1	CLEARING & GRUBBING	STRIP 12" TOPSOIL & STOCKPILE	9	AC			324	163.00	52,786	52,786
21-13-2	CLEARING & GRUBBING	CUT, STOCKPILE & FILL	40,000	CY			5,060	163.00	824,780	824,780
	21-13 Total						5,384		877,566	877,566
21-23	EARTHWORK, EXCAVATION, MASS									
21-23-1	EXCAVATION, BACKFILL AND COMPACTION	TRACK HOPPER	4,000	CY			660	68.73	45,362	45,362
21-23-2	EXCAVATION, BACKFILL AND COMPACTION	CONVEYOR TUNNELS	6,000	CY			990	68.73	68,043	68,043
21-23-3	EXCAVATION, BACKFILL AND COMPACTION	RECLAIM HOPPER	4,880	CY			805	68.73	55,341	55,341
	21-23 Total						2,455		168,746	168,746
21-51	MISCELLANEOUS									
21-51-1	PIPE TRENCH	6" PIPE, 4' BURIAL AND BEDDING	1,530	LF		8,522	522	68.73	35,859	44,381
21-51-2	PIPE TRENCH	12" PIPE, 4' BURIAL AND BEDDING	8,130	LF		64,064	3,398	68.73	233,568	297,632
21-51-3	PIPE TRENCH	3" PIPE, 4' BURIAL AND BEDDING	3,030	LF		13,635	900	68.73	61,851	75,486
21-51-4	PIPE TRENCH	2" PIPE, 4' BURIAL AND BEDDING	100	LF		415	29	68.73	1,966	2,381

ESTIMATE NO. : 31250A
PROJECT NO. : 12681-006
ISSUE DATE : 09/01/2011
PREP/REV : AT/BJD
APPROVED : MON

NPPD
GERALD GENTLEMAN STATION UNIT 1&2 COMMON FACILITIES
WET FGD
CONCEPTUAL COST ESTIMATE

SARGENT & LUNDY

PRICE LEVEL: 2011 LOCATION: Omaha, NE WAGE RATE: 11NEOMA PRODUCTIVITY FACTOR: 1.1

CODE OF ACCOUNT	DESCRIPTION A	DESCRIPTION B	QTY	UM	EQUIPMENT COST	MATERIAL COST	MAN-HOURS	CREW WAGE RATE	LABOR COST	TOTAL COST
21-51-5	PIPE TRENCH	1.5" PIPE, 4' BURIAL AND BEDDING	700	LF		2,786	200	68.73	13,760	16,546
21-51-6	DRAINAGE TRENCH	CAR THAWING SHED	600	LF		82,500	264	66.22	17,482	99,982
21-51-7	SUMP	DRAINAGE SYSTEM	10	CY		2,200	132	66.22	8,741	10,941
	21-51 Total					174,123	5,445		373,226	547,348
21-53	PILING & CAISSON									
21-53-1	AUGER CAST PILES 18" DIA. X 70' LONG, SUBCONTRACTOR COST INCLUDES LABOR	REAGENT PREP BUILDING	90	EA	288,000			102.76		288,000
21-53-2	AUGER CAST PILES 18" DIA. X 70' LONG, SUBCONTRACTOR COST INCLUDES LABOR	DEWATERING BUILDING	75	EA	240,000			102.76		240,000
21-53-3	AUGER CAST PILES 18" DIA. X 70' LONG, SUBCONTRACTOR COST INCLUDES LABOR	ZLD BUILDING	90	EA	288,000			102.76		288,000
21-53-4	AUGER CAST PILES 18" DIA. X 70' LONG, SUBCONTRACTOR COST INCLUDES LABOR	TANK FOUNDATIONS	180	EA	576,000			102.76		576,000
21-53-5	AUGER CAST PILES 18" DIA. X 70' LONG, SUBCONTRACTOR COST INCLUDES LABOR	TRACK HOPPER	30	EA	96,000			102.76		96,000
21-53-6	AUGER CAST PILES 18" DIA. X 70' LONG, SUBCONTRACTOR COST INCLUDES LABOR	LH RECLAIM HOPPER	30	EA	96,000			102.76		96,000
21-53-7	AUGER CAST PILES 18" DIA. X 70' LONG, SUBCONTRACTOR COST INCLUDES LABOR	LH CONVEYOR FOUNDATIONS	75	EA	240,000			102.76		240,000
21-53-8	AUGER CAST PILES 18" DIA. X 70' LONG, SUBCONTRACTOR COST INCLUDES LABOR	GH CONVEYOR FOUNDATIONS	23	EA	72,000			102.76		72,000
21-53-9	PILE TEST		1	EA	81,500			102.76		81,500
21-53-10	MOB/DEMOB		1	EA	100,000			102.76		100,000
	21-53 Total				2,077,500					2,077,500
21-57	ROAD, PARKING AREA, & SURFACED AREA									
21-57-1	CRUSHED ROCK SURFACING, 12", COMPACTED		44,450	SY		520,065	978	90.75	88,744	608,809
	21-57 Total					520,065	978		88,744	608,809
	21 Total				2,077,500	694,188	14,262		1,508,282	4,279,970
22	**CONCRETE**									
22-13	CONCRETE									
22-13-1	CONCRETE (INCLUDES REBAR, FORMWORK, EMBEDMENTS & EARTHWORK)	REAGENT PREP BUILDING	3,400	CY		731,000	26,180	66.22	1,733,640	2,464,640
22-13-2	CONCRETE (INCLUDES REBAR, FORMWORK, EMBEDMENTS & EARTHWORK)	DEWATERING BUILDING	2,700	CY		580,500	20,790	66.22	1,376,714	1,957,214
22-13-3	CONCRETE (INCLUDES REBAR, FORMWORK, EMBEDMENTS & EARTHWORK)	ZLD BUILDING	1,200	CY		258,000	11,880	66.22	786,694	1,044,694
22-13-4	CONCRETE (INCLUDES REBAR, FORMWORK, EMBEDMENTS & EARTHWORK)	DIESEL GENERATOR FOUNDATION	70	CY		15,050	693	66.22	45,890	60,940
22-13-5	CONCRETE (INCLUDES REBAR, FORMWORK, EMBEDMENTS & EARTHWORK)	TANK FOUNDATIONS	600	CY		129,000	4,620	66.22	305,936	434,936
22-13-6	CONCRETE (INCLUDES REBAR, FORMWORK, EMBEDMENTS & EARTHWORK)	NEW WAREHOUSE FOUNDATIONS	700	CY		150,500	5,390	66.22	356,926	507,426

ESTIMATE NO. : 31250A
PROJECT NO. : 12681-006
ISSUE DATE : 09/01/2011
PREP/REV : AT/BJD
APPROVED : MON

SARGENT & LUNDY

NPPD
GERALD GENTLEMAN STATION UNIT 1&2 COMMON FACILITIES
WET FGD
CONCEPTUAL COST ESTIMATE

PRICE LEVEL: 2011 LOCATION: Omaha, NE WAGE RATE: 11NEOMA PRODUCTIVITY FACTOR: 1.1

CODE OF ACCOUNT	DESCRIPTION A	DESCRIPTION B	QTY	UM	EQUIPMENT COST	MATERIAL COST	MAN-HOURS	CREW WAGE RATE	LABOR COST	TOTAL COST
22-13-7	CONCRETE (INCLUDES REBAR, FORMWORK, EMBEDMENTS & EARTHWORK)	TRACK HOPPER	1,700	CY		365,500	16,830	66.22	1,114,483	1,479,983
22-13-8	CONCRETE (INCLUDES REBAR, FORMWORK, EMBEDMENTS & EARTHWORK)	LH RECLAIM HOPPER	1,500	CY		322,500	19,800	66.22	1,311,156	1,633,656
22-13-9	CONCRETE (INCLUDES REBAR, FORMWORK, EMBEDMENTS & EARTHWORK)	LH CONVEYOR TUNNELS	1,260	CY		270,900	16,632	66.22	1,101,371	1,372,271
22-13-10	CONCRETE (INCLUDES REBAR, FORMWORK, EMBEDMENTS & EARTHWORK)	LH CONVEYOR FOUNDATIONS	300	CY		64,500	3,960	66.22	262,231	326,731
22-13-11	CONCRETE (INCLUDES REBAR, FORMWORK, EMBEDMENTS & EARTHWORK)	GH CONVEYOR FOUNDATIONS	100	CY		21,500	1,320	66.22	87,410	108,910
22-13-12	CONCRETE (INCLUDES REBAR, FORMWORK, EMBEDMENTS & EARTHWORK)	MAINTENANCE GARAGE	178	CY		38,270	1,371	66.22	90,761	129,031
22-13-13	CONCRETE (INCLUDES REBAR, FORMWORK, EMBEDMENTS & EARTHWORK)	CAR THAWING SHED FOUNDATION	320	CY		68,800	3,168	66.22	209,785	278,585
22-13-14	CONCRETE FLOORS	LH CONVEYOR GALLERY FLOORS	140	CY		30,100	1,078	66.22	71,385	101,485
22-13-15	CONCRETE FLOORS	GH CONVEYOR GALLERY FLOORS	40	CY		8,600	308	66.22	20,396	28,996
22-13-16	CONCRETE (INCLUDES REBAR, FORMWORK, EMBEDMENTS & EARTHWORK)	RELOCATED HYDROGEN BUILDING	60	CY		12,900	594	66.22	39,335	52,235
	22-13 Total					3,067,620	134,614		8,914,113	11,981,733
	22 Total					3,067,620	134,614		8,914,113	11,981,733
23	**STEEL**									
23-17	GALLERY									
23-17-1	GALLERY	GALLERY&STAIRS REAGENT PREP BUILDING	28,400	SF		965,600	10,309	80.14	826,179	1,791,779
23-17-2	GALLERY	GALLERY&STAIRS DEWATERING BUILDING	22,200	SF		754,800	8,059	80.14	645,816	1,400,616
23-17-3	GALLERY	GALLERY&STAIRS ZLD BUILDING	5,000	SF		170,000	1,815	80.14	145,454	315,454
23-17-3	GALLERY	TRACK CROSS-OVER UNLOADING AREA	500	SF				80.14		
	23-17 Total					1,890,400	20,183		1,617,450	3,507,850
23-25	ROLLED SHAPE							100.22		
23-25-1	ROLLED SHAPE	REAGENT PREP BUILDING	1,800	TN		4,428,000	31,680	100.22	3,174,970	7,602,970
23-25-2	ROLLED SHAPE	DEWATERING BUILDING	1,200	TN		2,952,000	21,120	100.22	2,116,646	5,068,646
23-25-3	ROLLED SHAPE	ZLD BUILDING	260	TN		639,600	4,576	100.22	458,607	1,098,207
23-25-4	ROLLED SHAPE	CAR THAWING SHED	81	TN		199,260	1,426	100.22	142,874	342,134
23-25-5	ROLLED SHAPE	FROZEN LIMESTONE CRACKERS SUPPORT STEEL	17	TN		40,836	292	100.22	29,280	70,116
	23-25 Total					8,259,696	59,094		5,922,377	14,182,073
	23 Total					10,150,096	79,277		7,539,826	17,689,922

ESTIMATE NO. : 31250A
PROJECT NO. : 12681-006
ISSUE DATE : 09/01/2011
PREP/REV : AT/BJD
APPROVED : MON

SARGENT & LUNDY

NPPD
GERALD GENTLEMAN STATION UNIT 1&2 COMMON FACILITIES
WET FGD
CONCEPTUAL COST ESTIMATE

PRICE LEVEL: 2011 LOCATION: Omaha, NE WAGE RATE: 11NEOMA PRODUCTIVITY FACTOR: 1.1

CODE OF ACCOUNT	DESCRIPTION A	DESCRIPTION B	QTY	UM	EQUIPMENT COST	MATERIAL COST	MAN-HOURS	CREW WAGE RATE	LABOR COST	TOTAL COST
24	**ARCHITECTURAL**									
24-15	DOOR (INCL. FRAME & HARDWARE)									
24-15-1	MANDOORS	CAR THAWING SHED	4	EA		5,980	35	58.89	2,073	8,053
24-15-2	ROLLUP DOORS MOTORIZED	CAR THAWING SHED	2	EA		33,000	88	58.89	5,182	38,182
24-15-1	MANDOORS	REAGENT PREP BUILDING	3	EA		4,485	26	58.89	1,555	6,040
24-15-2	ROLLUP DOORS MOTORIZED	REAGENT PREP BUILDING	1	EA		16,500	44	58.89	2,591	19,091
24-15-1	MANDOORS	DEWATERING BUILDING	3	EA		4,485	26	58.89	1,555	6,040
24-15-2	ROLLUP DOORS MOTORIZED	DEWATERING BUILDING	1	EA		16,500	44	58.89	2,591	19,091
24-15-1	MANDOORS	ZLD BUILDING	3	EA		4,485	26	58.89	1,555	6,040
24-15-2	ROLLUP DOORS MOTORIZED	ZLD BUILDING	1	EA		16,500	44	58.89	2,591	19,091
	24-15 Total					101,935	334		19,693	121,628
24-35	PRE-ENGINEERED BUILDING									
24-35-1	PRE-ENGINEERED BUILDING	NEW WAREHOUSE BLDG 100' X 120' X 15' HIGH	12,000	SF		472,560	5,861	100.22	587,369	1,059,929
24-35-2	PRE-ENGINEERED BUILDING	MAINTENANCE GARAGE 40'X40'X20'	1,600	SF		132,000	1,408	100.22	141,110	273,110
24-35-3	PRE-ENGINEERED BUILDING	EXPAND MAIN ELECTRICAL BUILDING, CAR THAWING SHED	2	EA		60,000	440	100.22	44,097	104,097
24-35-4	PRE-ENGINEERED BUILDING	PUMP HOUSES 2 X 10'X14', MAKEUP WATER WELL PUMP HOUSE	280	SF		28,000	308	100.22	30,868	58,868
	24-35 Total					692,560	8,017		803,444	1,496,004
24-37	ROOFING									
24-37-1	ROOFING	INSULATED METAL ROOFING, REAGENT PREP BUILDING	28,400	SF		419,752	2,780	67.38	187,341	607,093
24-37-2	ROOFING	INSULATED METAL ROOFING, DEWATERING BUILDING	22,200	SF		328,116	2,173	67.38	146,442	474,558
24-37-3	ROOFING	INSULATED METAL ROOFING, ZLD BUILDING	10,000	SF		147,800	979	67.38	65,965	213,765
24-37-4	ROOFING	INSULATED ROOFING, NEW WAREHOUSE	12,000	SF		177,360	1,175	67.38	79,158	256,518
24-37-5	UNINSULATED ROOFING & SIDING	CAR THAWING SHED	25,200	SF		96,768	1,137	67.38	76,579	173,347
	24-37 Total					1,169,796	8,244		555,485	1,725,281
24-41	SIDING							88.05		
24-41-1	SIDING	INSULATED SIDING, REAGENT PREP BUILDING	67,600	SF		999,128	6,618	88.05	582,718	1,581,846
24-41-2	SIDING	INSULATED SIDING, DEWATERING BUILDING	50,700	SF		749,346	4,964	88.05	437,039	1,186,385
24-41-3	SIDING	INSULATED SIDING, ZLD BUILDING	18,000	SF		266,040	1,762	88.05	155,162	421,202
24-41-4	SIDING	INSULATED SIDING, NEW WAREHOUSE	6,600	SF		97,548	646	88.05	56,893	154,441

ESTIMATE NO. : 31250A
PROJECT NO. : 12681-006
ISSUE DATE : 09/01/2011
PREP/REV : AT/BJD
APPROVED : MON

NPPD
GERALD GENTLEMAN STATION UNIT 1&2 COMMON FACILITIES
WET FGD
CONCEPTUAL COST ESTIMATE

SARGENT & LUNDY

PRICE LEVEL: 2011 LOCATION: Omaha, NE WAGE RATE: 11NEOMA PRODUCTIVITY FACTOR: 1.1

CODE OF ACCOUNT	DESCRIPTION A	DESCRIPTION B	QTY	UM	EQUIPMENT COST	MATERIAL COST	MAN-HOURS	CREW WAGE RATE	LABOR COST	TOTAL COST
	24-41 Total					2,112,062	13,990		1,231,812	3,343,874
	24 Total					4,076,353	30,585		2,610,433	6,686,786
27	**PAINTING & COATING**									
27-17	PAINTING									
27-17-1	PAINTING	TOUCH-UP PAINTING ALLOWANCE, REAGENT PREP BUILDING	56,800	SF		56,800	1,250	65.85	82,286	139,086
27-17-2	PAINTING	TOUCH-UP PAINTING ALLOWANCE, DEWATERING BUILDING	88,704	SF		88,704	1,951	65.85	128,505	217,209
27-17-3	PAINTING	TOUCH-UP PAINTING ALLOWANCE, ZLD BUILDING	15,000	SF		15,000	330	65.85	21,731	36,731
27-17-4	PAINTING	TOUCH-UP PAINTING ALLOWANCE, NEW WAREHOUSE	12,000	SF		12,000	264	65.85	17,384	29,384
	27-17 Total					172,504	3,795		249,907	422,411
	27 Total					172,504	3,795		249,907	422,411
31	**MECHANICAL EQUIPMENT**									
31-17	COMPRESSOR & ACCESSORIES									
31-17-1	AIR COMPRESSOR, 650 SCFM/EA @ 100 PSIG		3	EA	462,000		1,320	83.48	110,194	572,194
31-17-2	RECEIVERS, 1000 GAL/EA		2	EA	11,000		66	83.48	5,510	16,510
31-17-3	IA DRYERS W/FILTERS, 1300 NET SCFM/EA		2	EA	33,000		70	83.48	5,877	38,877
	31-17 Total				506,000		1,456		121,580	627,580
31-41	FIRE PROTECTION EQUIPMENT & SYSTEM									
31-41-1	FIRE PROTECTION EQUIPMENT & SYSTEM	ALLOWANCE, REAGENT PREP BUILDING	1	LS	412,500		5,554	90.17	500,795	913,295
31-41-2	FIRE PROTECTION EQUIPMENT & SYSTEM	ALLOWANCE, DEWATERING BUILDING	1	LS	250,800		3,369	90.17	303,810	554,610
31-41-3	FIRE PROTECTION EQUIPMENT & SYSTEM	ALLOWANCE, ZLD BUILDING	15,000	SF		90,000	330	90.17	29,756	119,756
31-41-4	FIRE PROTECTION EQUIPMENT & SYSTEM	ALLOWANCE, NEW WAREHOUSE	12,000	SF		72,000	264	90.17	23,805	95,805
	31-41 Total				663,300	162,000	9,517		858,166	1,683,466
31-45	FLUE GAS CLEANUP, FGD EQUIPMENT									
31-45-1	REAGENT PREP SYSTEM	SYSTEM BASED ON BABCOCK POWER BUGETARY PRICE	1	LS	18,512,000		114,400	83.48	9,550,112	28,062,112
31-45-2	DEWATERING SYSTEM	SYSTEM BASED ON BABCOCK POWER BUGETARY PRICE	1	LS	13,884,000		85,690	83.48	7,153,401	21,037,401
	31-45 Total				32,396,000		200,090		16,703,513	49,099,513

ESTIMATE NO. : 31250A
PROJECT NO. : 12681-006
ISSUE DATE : 09/01/2011
PREP/REV : AT/BJD
APPROVED : MON

SARGENT & LUNDY

NPPD
GERALD GENTLEMAN STATION UNIT 1&2 COMMON FACILITIES
WET FGD
CONCEPTUAL COST ESTIMATE

PRICE LEVEL: 2011 LOCATION: Omaha, NE WAGE RATE: 11NEOMA PRODUCTIVITY FACTOR: 1.1

CODE OF ACCOUNT	DESCRIPTION A	DESCRIPTION B	QTY	UM	EQUIPMENT COST	MATERIAL COST	MAN-HOURS	CREW WAGE RATE	LABOR COST	TOTAL COST
31-63	GENERATOR									
31-63-1	EMERGENGY DIESEL GENERATOR		1	EA	264,000		880	70.93	62,418	326,418
	31-63 Total				264,000		880		62,418	326,418
31-75	PUMP									
31-75-1	PUMP	MAKEUP WATER PUMPS, 3000 GPM X 200 TDH	2	EA	95,260		552	82.12	45,347	140,607
31-75-2	PUMP	MAKEUP WELL PUMPS, 2600 GPM	2	EA	95,260		552	82.12	45,347	140,607
31-75-3	PUMP	REAGENT PREP SUMP PUMP, 200GPM, 150TDH - SUPPLY OF PUMP INCLUDED IN FGD SUPPLIER QUOTE	2	EA			132	82.12	10,840	10,840
31-75-4	PUMP	DEWATERING BUILDING SUMP PUMP, 200GPM, 150TDH - SUPPLY OF PUMP INCLUDED IN FGD SUPPLIER QUOTE	2	EA			132	82.12	10,840	10,840
31-75-5	PUMP	LIMESTONE TRACK HOPPER SUMP PUMP, 120GPM, 150TDH - SUPPLY OF PUMP INCLUDED IN R&S, LH SUPPLIER QUOTE	2	EA			88	82.12	7,227	7,227
31-75-6	PUMP	LIMESTONE RECLAIM HOPPER SUMP PUMP, 200GPM, 150TDH - SUPPLY OF PUMP INCLUDED IN R&S, LH SUPPLIER QUOTE	2	EA			132	82.12	10,840	10,840
31-75-7	PUMP	WASTEWATER FORWARDING PUMP, 100GPM, 150TDH	2	EA	14,300		141	82.12	11,562	25,862
31-75-8	PUMP	SUMP PUMP DRAINAGE SYSTEM	2	EA	6,600		53	82.12	4,336	10,936
	31-75 Total				211,420		1,782		146,338	357,758
31-83	TANK									
31-83-1	TANK	REAGENT SLURRY TANK, 44' DIA X 63' TALL	1	EA	458,900		6,597	100.75	664,606	1,123,506
31-83-2	TANK	FILTER FEED TANK, 21' DIA X 33' TALL	1	EA	133,100		1,880	100.75	189,400	322,500
31-83-3	TANK	RECLAIM WATER TANK, 41' DIA X 66' TALL	1	EA	434,000		6,000	100.75	604,524	1,038,524
31-83-4	TANK	MAKE-UP WATER TANK, 28.5' DIA X 43' TALL	1	EA	247,500		2,765	100.75	278,614	526,114
31-83-5	TANK	INFLUENT STORAGE TANK, 20' DIA X 15' TALL, CS	1	EA	150,700		2,074	100.75	208,905	359,605
31-83-6	TANK	WASTE WATER STORAGE TANK, 16' DIA X 24' TALL, FRP	1	EA	50,930		255	82.67	21,097	72,027
	31-83 Total				1,475,130		19,571		1,967,147	3,442,277

ESTIMATE NO. : 31250A
PROJECT NO. : 12681-006
ISSUE DATE : 09/01/2011
PREP/REV : AT/BJD
APPROVED : MON

SARGENT & LUNDY

NPPD
GERALD GENTLEMAN STATION UNIT 1&2 COMMON FACILITIES
WET FGD
CONCEPTUAL COST ESTIMATE

PRICE LEVEL: 2011 LOCATION: Omaha, NE WAGE RATE: 11NEOMA PRODUCTIVITY FACTOR: 1.1

CODE OF ACCOUNT	DESCRIPTION A	DESCRIPTION B	QTY	UM	EQUIPMENT COST	MATERIAL COST	MAN-HOURS	CREW WAGE RATE	LABOR COST	TOTAL COST
31-93	WATER TREATING									
31-93-1	FGD ZLD SYSTEM EQUIPMENT	QUOTE FROM AQUATECH	1	LT	4,900,000		38,153	83.48	3,185,000	8,085,000
31-93-2	FGD ZLD SYSTEM INTER-CONNECTING PIPE	QUOTE FROM AQUATECH	1	LT	480,000		3,737	83.48	312,000	792,000
	31-93 Total				5,380,000		41,890		3,497,000	8,877,000
	31 Total				40,895,850	162,000	275,187		23,356,162	64,414,012
33	**MATERIAL HANDLING EQUIPMENT**									
33-37	REAGENT HANDLING SYSTEM									
33-37-1	REAGENT HANDLING SYSTEM EQUIPMENT	BUGETARY QUOTE FROM R&S FOR ENGINEERING, PROCUREMENT, AND DELIVERY OF THE ITEMS LISTED BELOW	1	LS	7,090,000		56,100	80.35	4,507,635	11,597,635
33-37-2	FROZEN LIMESTONE CRACKERS	1000 TPH	2	EA	330,000		1,027	80.35	82,500	412,500
33-37-3	FROZEN LIMESTONE CRACKERS	400 TPH	2	EA	310,000		965	80.35	77,500	387,500
	33-37 Total				7,730,000		58,091		4,667,635	12,397,635
	33 Total				7,730,000		58,091		4,667,635	12,397,635
34-37-4	FROZEN LIMESTONE CRACKER MOTORS	75 HP MOTOR - INSTALLATION INCLUDED WITH THE CRACKERS	4	EA	40,000			68.77		40,000
	34-37 Total				40,000					40,000
	34 Total				40,000					40,000
33-38	GYPSUM HANDLING SYSTEM									
33-38-1	GYPSUM HANDLING SYSTEM EQUIPMENT	BUGETARY QUOTE FROM R&S FOR ENGINEERING, PROCUREMENT, AND DELIVERY OF THE ITEMS LISTED BELOW	1	LS	2,900,000		29,869	80.35	2,400,000	5,300,000
	33-38 Total				2,900,000		29,869		2,400,000	5,300,000
33-47	CAR THAWING EQUIPMENT									
33-47-1	CAR THAWING EQUIPMENT		1	LS	770,000		4,070	83.48	339,764	1,109,764
33-47-2	VENTILATION ALLOWANCE		1	LS	55,000		110	83.48	9,183	64,183
	33-47 Total				825,000		4,180		348,946	1,173,946
33-53	RAILROAD									
33-53-1	NEW RAILROAD TRAKS & SWITCHES, AND MODIFICATIONS OF EXISTING TRACKS	BUDGETARY QUOTE FROM NPPD	1	LS	10,672,260			83.48		10,672,260
33-53-2	CONSTRUCTION COST FOR REAGENT TRACK BRIDGE	BUDGETARY QUOTE FROM NPPD	1	LS	1,055,596			83.48		1,055,596
	33-53 Total				11,727,856					11,727,856
33-99	MAINTENANCE EQUIPMENT									

ESTIMATE NO. : 31250A
PROJECT NO. : 12681-006
ISSUE DATE : 09/01/2011
PREP/REV : AT/BJD
APPROVED : MON

NPPD
GERALD GENTLEMAN STATION UNIT 1&2 COMMON FACILITIES
WET FGD
CONCEPTUAL COST ESTIMATE

SARGENT & LUNDY

PRICE LEVEL: 2011 LOCATION: Omaha, NE WAGE RATE: 11NEOMA PRODUCTIVITY FACTOR: 1.1

CODE OF ACCOUNT	DESCRIPTION A	DESCRIPTION B	QTY	UM	EQUIPMENT COST	MATERIAL COST	MAN-HOURS	CREW WAGE RATE	LABOR COST	TOTAL COST
33-99-1	BULLDOZER		1	EA	1,100,000			83.48		1,100,000
33-99-2	FRONT END LOADER		1	EA	1,650,000			83.48		1,650,000
	33-99 Total				2,750,000					2,750,000
	33 Total				18,202,856		34,049		2,748,946	20,951,802
34	**HVAC**									
34-99	HVAC									
34-99-1	HVAC	ALLOWANCE, REAGENT PREP BUILDING	1	LS	825,000		12,354	75.59	933,846	1,758,846
34-99-2	HVAC	ALLOWANCE, DEWATERING BUILDING	1	LS	495,000		7,413	75.59	560,341	1,055,341
34-99-3	HVAC	ALLOWANCE, ZLD BUILDING	15,000	SF		150,000	2,475	75.59	187,085	337,085
34-99-4	HVAC	ALLOWANCE, NEW WAREHOUSE	12,000	SF		120,000	132	75.59	9,978	129,978
	34-99 Total				1,320,000	270,000	22,374		1,691,251	3,281,251
	34 Total				1,320,000	270,000	22,374		1,691,251	3,281,251
35	**PIPING**									
35-13	LARGE BORE PIPING									
35-13-1	12" CS SCH 40 PIPING	ABOVE GROUND PIPING	160	LF		26,608	493	90.17	44,432	71,040
35-13-2	12" CS SCH 40 PIPING	BURIED PIPING	12,030	LF		2,130,513	18,923	90.17	1,706,304	3,836,817
35-13-3	6" HDPE SDR 9 PIPING	BURIED PIPING	1,530	LF		12,393	1,161	85.55	99,347	111,740
35-13-4	4" CS SCH 40 PIPING	ABOVE GROUND PIPING	60	LF		1,554	98	90.17	8,808	10,362
35-13-5	3" CS SCH 80 PIPING	ABOVE GROUND PIPING	680	LF		22,000	1,462	90.17	131,800	153,800
35-13-6	3" CS SCH 40 PIPING	ABOVE GROUND PIPING	1,460	LF		28,616	2,152	90.17	194,049	222,665
35-13-7	3" CS/RL PIPING	ABOVE GROUND PIPING	260	LF		10,192	97	90.17	8,768	18,960
35-13-8	3" FRP PIPING	ABOVE GROUND PIPING	130	LF		6,513	47	90.17	4,255	10,768
35-13-9	3" CS SCH 40 PIPING	BURIED PIPING	1,760	LF		46,992	1,297	90.17	116,961	163,953
35-13-10	3" HDPE SDR 9 PIPING	BURIED PIPING	1,630	LF		4,075	1,363	85.55	116,577	120,652
35-13-11	2.5" FRP PIPING	ABOVE GROUND PIPING	320	LF		16,032	116	90.17	10,474	26,506
35-13-12	VALVES	10" GATE VALVE , FLANGED, 150LB	1	EA		4,400	15	90.17	1,369	5,769
35-13-13	VALVES	6" CS GATE VALVE , FLANGED, 150LB	2	EA		3,700	19	90.17	1,726	5,426
35-13-14	VALVES	4" CS GATE VALVE , FLANGED, 150LB	3	EA		3,750	24	90.17	2,142	5,892
35-13-15	VALVES	3" CS GATE VALVE	1	EA		1,000	9	90.17	774	1,774
35-13-16	VALVES	3" FOR SERVICE WATER ISOLATION	40	EA		40,000	343	90.17	30,946	70,946
35-13-17	VALVES	3" FOR SERVICE AIR ISOLATION	40	EA		40,000	343	90.17	30,946	70,946
	35-13 Total					2,398,338	27,962		2,509,679	4,908,017

ESTIMATE NO. : 31250A
PROJECT NO. : 12681-006
ISSUE DATE : 09/01/2011
PREP/REV : AT/BJD
APPROVED : MON

NPPD
GERALD GENTLEMAN STATION UNIT 1&2 COMMON FACILITIES
WET FGD
CONCEPTUAL COST ESTIMATE

SARGENT & LUNDY

PRICE LEVEL: 2011 LOCATION: Omaha, NE WAGE RATE: 11NEOMA PRODUCTIVITY FACTOR: 1.1

CODE OF ACCOUNT	DESCRIPTION A	DESCRIPTION B	QTY	UM	EQUIPMENT COST	MATERIAL COST	MAN-HOURS	CREW WAGE RATE	LABOR COST	TOTAL COST
35-15	SMALL BORE PIPING									
35-15-1	2" CS SCH 80 PIPING	ABOVE GROUND PIPING	4,020	LF		106,932	5,572	90.17	502,402	609,334
35-15-4	2" SS 304 SCH 40 PIPING	ABOVE GROUND PIPING	600	LF		30,900	950	90.17	85,698	116,598
35-15-5	2" CS SCH 80 PIPING	BURIED PIPING	100	LF		2,660	79	90.17	7,141	9,801
35-15-6	1.5" SS 304 PIPING	ABOVE GROUND PIPING	1,400	LF		50,260	2,033	90.17	183,298	233,558
35-15-7	1.5" SS 304 PIPING	BURIED PIPING	700	LF		25,130	1,016	90.17	91,649	116,779
35-15-8	1" SS 304 SCH 40 PIPING	ABOVE GROUND PIPING	650	LF		13,130	808	90.17	72,853	85,983
35-15-9	VALVES	2" SS VALVES FOR INSTRUMENT AIR ISOLATION	200	EA		169,000	1,716	90.17	154,732	323,732
35-15-10	VALVES	2" CS GATE VALVE , 150LB	2	EA		1,420	17	90.17	1,547	2,967
35-15-11	DRAINAGE PIPING		600	LF		18,480	660	85.55	56,463	74,943
35-15-12	MAKE-UP WELL PIPING			LF				85.55		
	35-15 Total					417,912	12,852		1,155,782	1,573,694
	35 Total					2,816,250	40,814		3,665,461	6,481,711
36	**INSULATION**									
36-15	INSULATION, PIPE									
36-15-1	INSULATION, PIPE	1" CALSIL INSULATION WITH COVER, FOR 3" PIPE	880	LF		6,402	301	58.25	17,508	23,910
36-15-2	INSULATION, PIPE	1" CALSIL INSULATION WITH COVER, FOR 2" PIPE	1,500	LF		9,360	473	58.25	27,536	36,896
	36-15 Total					15,762	773		45,044	60,806
	36 Total					15,762	773		45,044	60,806
41	**ELECTRICAL EQUIPMENT**									
41-33	HEAT TRACING									
41-33-1	HEAT TRACING	HEAT TRACE SYSTEM, 10 WATT/FT, FOR 3" PIPE	880	LF	9,592		232	87.40	20,305	29,897
41-33-2	HEAT TRACING	HEAT TRACE SYSTEM, 10 WATT/FT, FOR 2" PIPE	1,500	LF	15,600		347	87.40	30,284	45,884
	41-33 Total					25,192	579		50,589	75,781
41-37	LIGHTING ACCESSORY (FIXTURE)									
41-37-1	LIGHTING ACCESSORY (FIXTURE)	ALLOWANCE, REAGENT PREP BUILDING	1	LS	385,000		11,153	87.40	974,763	1,359,763
41-37-2	LIGHTING ACCESSORY (FIXTURE)	ALLOWANCE, DEWATERING BUILDING	1	LS	495,000		6,692	87.40	584,916	1,079,916
41-37-3	LIGHTING ACCESSORY (FIXTURE)	ALLOWANCE, ZLD BUILDING	15,000	SF		150,000	2,475	87.40	216,315	366,315
41-37-4	LIGHTING ACCESSORY (FIXTURE)	ALLOWANCE, NEW WAREHOUSE	12,000	SF		120,000	132	87.40	11,537	131,537
41-37-5	LIGHTING ACCESSORY (FIXTURE)	ALLOWANCE, CAR THAWING SHED	1	LT		30,000	550	87.40	48,070	78,070
	41-37 Total				880,000	300,000	21,002		1,835,601	3,015,601

ESTIMATE NO. : 31250A
PROJECT NO. : 12681-006
ISSUE DATE : 09/01/2011
PREP/REV : AT/BJD
APPROVED : MON

SARGENT & LUNDY

NPPD
GERALD GENTLEMAN STATION UNIT 1&2 COMMON FACILITIES
WET FGD
CONCEPTUAL COST ESTIMATE

PRICE LEVEL: 2011 LOCATION: Omaha, NE WAGE RATE: 11NEOMA PRODUCTIVITY FACTOR: 1.1

CODE OF ACCOUNT	DESCRIPTION A	DESCRIPTION B	QTY	UM	EQUIPMENT COST	MATERIAL COST	MAN-HOURS	CREW WAGE RATE	LABOR COST	TOTAL COST
41-41	ELECTRICAL MISCELLANEOUS	ALL OTHER ELECTRICAL WORK INCLUDED IN AUX POWER & FAN ESTIMATE	1	EA				87.40		
	41-41 Total									
	41 Total				880,000	325,192	21,581		1,886,190	3,091,382
44	**CONTROL & INSTRUMENTATION**									
44-13	CONTROL SYSTEM									
44-13-1	DCS I/O POINTS		400	EA	400,000		594	76.60	45,500	445,500
44-13-2	BOP INSTRUMENTS & RACKS		1	LT	150,000		2,475	76.60	189,585	339,585
44-13-3	CEMS		2	EA	700,000		2,200	76.60	168,520	868,520
	44-13 Total				1,250,000		5,269		403,605	1,653,605
	44 Total				1,250,000		5,269		403,605	1,653,605
60	**CONSTRUCTION EQUIPMENT SUPPLEMENT**									
60-10	CONSTRUCTION EQUIPMENT SUPPLEMENT		1	EA				83.48		
	60-10 Total									
	60 Total									
90	SUBTOTAL DIRECT & CONSTRUCTION INDIRECT COST				72,396,206	21,749,965	723,883		59,621,938	153,768,108
91	OTHER DIRECT & CONSTRUCTION INDIRECT COST									
91-1	SCAFFOLDING - % of ACCT NO. 90		2.5	%					2,034,298	2,034,298
91-2	COST DUE TO OVERTIME WORKING 5 -10 HOUR DAYS		1.0	EA			62,946		8,619,454	8,619,454
91-3	PER DIEM		10.0	$/HR					7,238,826	7,238,826
91-4	CONSUMABLES - % of ACCT NO. 90		0.5	%					406,860	406,860
91-5	FREIGHT ON MATERIAL - % of ACCT NO. 90		5.0	%		1,087,498				1,087,498
91-6	FREIGHT ON EQUIPMENT - % of ACCT NO. 90		5.0	%	3,619,810					3,619,810
91-7	SALES TAX - % of ACCT NO. 90 MATERIAL & EQUIPMENT SHOWN ON MATERIAL COLUMN		5.5	%		5,178,039				5,178,039
91-8	MOBILIZATION/DEMOBILIZATION - % OF ACCT NO. 90		1.0	%					596,219	596,219
91-9	CONTRACTOR'S GENERAL AND ADMINISTRATION EXPENSE - % of ACCT NO. 90, 91-1 TO 91-8		10.0	%		2,801,550			7,851,759	10,653,310
91-10	CONTRACTOR'S PROFIT - % of ACCT NO. 90, 91-1 TO 91-8		5.0	%		1,400,775			3,925,880	5,326,655
	91 - SUBTOTAL				3,619,810	10,467,863			30,673,295	44,760,968
92	TOTAL DIRECT & CONSTRUCTION INDIRECT COST				76,016,016	32,217,827	786,829		90,295,233	198,529,076
93	INDIRECT COST									

ESTIMATE NO. : 31250A
PROJECT NO. : 12681-006
ISSUE DATE : 09/01/2011
PREP/REV : AT/BJD
APPROVED : MON

SARGENT & LUNDY

NPPD
GERALD GENTLEMAN STATION UNIT 1&2 COMMON FACILITIES
WET FGD
CONCEPTUAL COST ESTIMATE

PRICE LEVEL: 2011 LOCATION: Omaha, NE WAGE RATE: 11NEOMA PRODUCTIVITY FACTOR: 1.1

CODE OF ACCOUNT	DESCRIPTION A	DESCRIPTION B	QTY	UM	EQUIPMENT COST	MATERIAL COST	MAN-HOURS	CREW WAGE RATE	LABOR COST	TOTAL COST
93-1	ENGINEERING, PROCUREMENT, & PROJECT SERVICES - UNIT 1		1.0	LS						12,600,000
93-2	ENGINEERING, PROCUREMENT, & PROJECT SERVICES - UNIT 2		1.0	LS						8,820,000
93-3	ENGINEERING, PROCUREMENT, & PROJECT SERVICES FOR AUX POWER AND ID FANS - UNIT 1		1.0	LS						1,890,000
93-4	ENGINEERING, PROCUREMENT, & PROJECT SERVICES FOR AUX POWER AND ID FANS - UNIT 2		1.0	LS						1,260,000
93-5	CONSTRUCTION MANAGEMENT SUPPORT - % of ACCT NO. 92		1.5	%						2,977,936
93-6	S-U / COMMISSIONING - % of ACCT NO. 92		1.0	%						1,985,291
93-7	SPARE PARTS - % of ACCT NO. 92 EQUIPMENT		3.0	%						2,280,480
93-8	OWNERS ENGINEERING COST - UNIT 1		1.0	LS						1,980,000
93-9	OWNERS ENGINEERING COST - UNIT 2		1.0	LS						1,452,000
93-10	OWNERS BOND FEES @ 2.5% OF $200,000,000		1.0	LS						5,000,000
93-11	OWNERS COST - % of ACCT NOS. 92, 93.1, 93.2, 93.3, 93.4		2.0	%						4,606,856
93-12	EPC FEE - % of ACCT NOS. 92, 93.1, 93.2, 93.3, 93.4		15.0	%						34,551,418
	93 - TOTAL									79,403,981
94	TOTAL ESCALATION									31,975,925
94-1	ESCALATION ON EQUIPMENT - % of ACCT NO. 92		9.5	%	7,227,987					7,227,987
94-2	ESCALATION ON MATERIAL - % of ACCT NO. 92		11.7	%		3,760,584				3,760,584
94-3	ESCALATION ON LABOR - % of ACCT NO. 92		13.0	%					11,712,156	11,712,156
94-4	ESCALATION ON INDIRECT - % of ACCT NO. 93		11.7	%						9,275,198
95	TOTAL CONTINGENCY									61,981,796
95-1	CONTINGENCY ON EQUIPMENT - % of ACCT NO. 92, 94.1		20.0	%	16,648,801					16,648,801
95-2	CONTINGENCY ON MATERIAL - % of ACCT NO. 92, 94.2		20.0	%		7,195,682				7,195,682
95-3	CONTINGENCY ON LABOR - % of ACCT NO. 92, 94.3		20.0	%					20,401,478	20,401,478
95-4	CONTINGENCY ON INDIRECT - % of ACCT NO. 93, 94.4		20.0	%						17,735,836
96	TOTAL CONSTRUCTION COST									371,890,778
97	INTEREST DURING CONSTRUCTION (COMPOUNDED MONTHLY)									40,315,474
98	TOTAL PROJECT COST									412,206,253

H:\INFODIV\PROJECTS\Nebraska Public Power District\Gerald Gentlemen - Wet FGD\[31250A2 - Gerald Gentleman Stati EXCEL VERSION 012711

ESTIMATE NO. : 31250A
PROJECT NO. : 12681-006
ISSUE DATE : 09/01/2011
PREP/REV : AT/BJD
APPROVED : MON

SARGENT & LUNDY

NPPD
GERALD GENTLEMAN STATION UNIT 1&2 COMMON FACILITIES
WET FGD
CASH FLOW REPORT

PRICE LEVEL 2011

CASH FLOW BY MONTH

		JAN-2011	FEB-2011	MAR-2011	APR-2011	MAY-2011	JUN-2011	JUL-2011	AUG-2011	SEP-2011	OCT-2011	NOV-2011	DEC-2011
TOTAL CONSTRUCTION COST	M	0	0	0	0	0	0	0	0	0	0	0	0
TOTAL CONSTRUCTION COST	C	0	0	0	0	0	0	0	0	0	0	0	0
INTEREST DURING CONSTRUCTION	M	0	0	0	0	0	0	0	0	0	0	0	0
INTEREST DURING CONSTRUCTION	C	0	0	0	0	0	0	0	0	0	0	0	0
TOTAL	M	0	0	0	0	0	0	0	0	0	0	0	0
TOTAL	C	0	0	0	0	0	0	0	0	0	0	0	0

		JAN-2012	FEB-2012	MAR-2012	APR-2012	MAY-2012	JUN-2012	JUL-2012	AUG-2012	SEP-2012	OCT-2012	NOV-2012	DEC-2012
TOTAL CONSTRUCTION COST	M	32,903,999	0	0	0	0	0	0	0	0	0	0	0
TOTAL CONSTRUCTION COST	C	32,903,999	32,903,999	32,903,999	32,903,999	32,903,999	32,903,999	32,903,999	32,903,999	32,903,999	32,903,999	32,903,999	32,903,999
INTEREST DURING CONSTRUCTION	M	137,210	137,782	138,356	138,933	139,513	140,094	140,679	141,265	141,854	142,446	143,040	143,636
INTEREST DURING CONSTRUCTION	C	137,210	274,992	413,348	552,281	691,794	831,888	972,567	1,113,832	1,255,687	1,398,133	1,541,172	1,684,809
TOTAL	M	33,041,209	137,782	138,356	138,933	139,513	140,094	140,679	141,265	141,854	142,446	143,040	143,636
TOTAL	C	33,041,209	33,178,991	33,317,347	33,456,280	33,595,793	33,735,888	33,876,566	34,017,831	34,159,686	34,302,132	34,445,172	34,588,808

		JAN-2013	FEB-2013	MAR-2013	APR-2013	MAY-2013	JUN-2013	JUL-2013	AUG-2013	SEP-2013	OCT-2013	NOV-2013	DEC-2013
TOTAL CONSTRUCTION COST	M	97,032,517	0	0	0	0	0	0	0	0	0	0	0
TOTAL CONSTRUCTION COST	C	129,936,516	129,936,516	129,936,516	129,936,516	129,936,516	129,936,516	129,936,516	129,936,516	129,936,516	129,936,516	129,936,516	129,936,516
INTEREST DURING CONSTRUCTION	M	548,861	551,150	553,448	555,756	558,073	560,401	562,737	565,084	567,440	569,807	572,183	574,569
INTEREST DURING CONSTRUCTION	C	2,233,670	2,784,819	3,338,267	3,894,023	4,452,097	5,012,497	5,575,234	6,140,318	6,707,759	7,277,566	7,849,748	8,424,317
TOTAL	M	97,581,378	551,150	553,448	555,756	558,073	560,401	562,737	565,084	567,440	569,807	572,183	574,569
TOTAL	C	132,170,186	132,721,335	133,274,783	133,830,539	134,388,613	134,949,013	135,511,750	136,076,834	136,644,275	137,214,081	137,786,264	138,360,833

		JAN-2014	FEB-2014	MAR-2014	APR-2014	MAY-2014	JUN-2014	JUL-2014	AUG-2014	SEP-2014	OCT-2014	NOV-2014	DEC-2014
TOTAL CONSTRUCTION COST	M	156,342,049	0	0	0	0	0	0	0	0	0	0	0
TOTAL CONSTRUCTION COST	C	286,278,565	286,278,565	286,278,565	286,278,565	286,278,565	286,278,565	286,278,565	286,278,565	286,278,565	286,278,565	286,278,565	286,278,565
INTEREST DURING CONSTRUCTION	M	1,228,911	1,234,036	1,239,182	1,244,349	1,249,538	1,254,748	1,259,981	1,265,235	1,270,511	1,275,809	1,281,129	1,286,471
INTEREST DURING CONSTRUCTION	C	9,653,228	10,887,264	12,126,445	13,370,794	14,620,332	15,875,080	17,135,061	18,400,296	19,670,807	20,946,615	22,227,744	23,514,216
TOTAL	M	157,570,960	1,234,036	1,239,182	1,244,349	1,249,538	1,254,748	1,259,981	1,265,235	1,270,511	1,275,809	1,281,129	1,286,471
TOTAL	C	295,931,793	297,165,829	298,405,010	299,649,359	300,898,897	302,153,645	303,413,626	304,678,861	305,949,372	307,225,181	308,506,310	309,792,781

		JAN-2015	FEB-2015	MAR-2015	APR-2015	MAY-2015	JUN-2015	JUL-2015	AUG-2015	SEP-2015	OCT-2015	NOV-2015	DEC-2015
TOTAL CONSTRUCTION COST	M	85,612,213	0	0	0	0	0	0	0	0	0	0	0
TOTAL CONSTRUCTION COST	C	371,890,778	371,890,778	371,890,778	371,890,778	371,890,778	371,890,778	371,890,778	371,890,778	371,890,778	371,890,778	371,890,778	371,890,778
INTEREST DURING CONSTRUCTION	M	1,648,639	1,655,714	1,662,619	1,669,552	1,676,514	1,683,505	1,690,525	1,697,575	1,704,654	1,711,762	0	0
INTEREST DURING CONSTRUCTION	C	25,163,055	26,818,769	28,481,388	30,150,940	31,827,454	33,510,959	35,201,484	36,899,059	38,603,712	40,315,474	40,315,474	40,315,474
TOTAL	M	87,261,052	1,655,714	1,662,619	1,669,552	1,676,514	1,683,505	1,690,525	1,697,575	1,704,654	1,711,762	0	0
TOTAL	C	397,053,833	398,709,547	400,372,166	402,041,718	403,718,232	405,401,737	407,092,262	408,789,837	410,494,491	412,206,253	412,206,253	412,206,253

ESTIMATE NO. : 31250A
PROJECT NO. : 12681-006
ISSUE DATE : 09/01/2011
PREP/REV : AT/BJD
APPROVED : MON

SARGENT & LUNDY

NPPD
GERALD GENTLEMAN STATION UNIT 1&2 COMMON FACILITIES
WET FGD
CASH FLOW REPORT

PRICE LEVEL 2011

CASH FLOW BY MONTH

		JAN-2016	FEB-2016	MAR-2016	APR-2016	MAY-2016	JUN-2016	JUL-2016	AUG-2016	SEP-2016	OCT-2016	NOV-2016	DEC-2016
TOTAL CONSTRUCTION COST	M	0	0	0	0	0	0	0	0	0	0	0	0
TOTAL CONSTRUCTION COST	C	371,890,778	371,890,778	371,890,778	371,890,778	371,890,778	371,890,778	371,890,778	371,890,778	371,890,778	371,890,778	371,890,778	371,890,778
INTEREST DURING CONSTRUCTION	M	0	0	0	0	0	0	0	0	0	0	0	0
INTEREST DURING CONSTRUCTION	C	40,315,474	40,315,474	40,315,474	40,315,474	40,315,474	40,315,474	40,315,474	40,315,474	40,315,474	40,315,474	40,315,474	40,315,474
TOTAL	M	0	0	0	0	0	0	0	0	0	0	0	0
TOTAL	C	412,206,253	412,206,253	412,206,253	412,206,253	412,206,253	412,206,253	412,206,253	412,206,253	412,206,253	412,206,253	412,206,253	412,206,253

		JAN-2017	FEB-2017	MAR-2017	APR-2017	MAY-2017	JUN-2017	JUL-2017	AUG-2017	SEP-2017	OCT-2017	NOV-2017	DEC-2017
TOTAL CONSTRUCTION COST	M	0	0	0	0	0	0	0	0	0	0	0	0
TOTAL CONSTRUCTION COST	C	371,890,778	371,890,778	371,890,778	371,890,778	371,890,778	371,890,778	371,890,778	371,890,778	371,890,778	371,890,778	371,890,778	371,890,778
INTEREST DURING CONSTRUCTION	M	0	0	0	0	0	0	0	0	0	0	0	0
INTEREST DURING CONSTRUCTION	C	40,315,474	40,315,474	40,315,474	40,315,474	40,315,474	40,315,474	40,315,474	40,315,474	40,315,474	40,315,474	40,315,474	40,315,474
TOTAL	M	0	0	0	0	0	0	0	0	0	0	0	0
TOTAL	C	412,206,253	412,206,253	412,206,253	412,206,253	412,206,253	412,206,253	412,206,253	412,206,253	412,206,253	412,206,253	412,206,253	412,206,253

		JAN-2018	FEB-2018	MAR-2018	APR-2018	MAY-2018	JUN-2018	JUL-2018	AUG-2018	SEP-2018	OCT-2018	NOV-2018	DEC-2018
TOTAL CONSTRUCTION COST	M	0	0	0	0	0	0	0	0	0	0	0	0
TOTAL CONSTRUCTION COST	C	371,890,778	371,890,778	371,890,778	371,890,778	371,890,778	371,890,778	371,890,778	371,890,778	371,890,778	371,890,778	371,890,778	371,890,778
INTEREST DURING CONSTRUCTION	M	0	0	0	0	0	0	0	0	0	0	0	0
INTEREST DURING CONSTRUCTION	C	40,315,474	40,315,474	40,315,474	40,315,474	40,315,474	40,315,474	40,315,474	40,315,474	40,315,474	40,315,474	40,315,474	40,315,474
TOTAL	M	0	0	0	0	0	0	0	0	0	0	0	0
TOTAL	C	412,206,253	412,206,253	412,206,253	412,206,253	412,206,253	412,206,253	412,206,253	412,206,253	412,206,253	412,206,253	412,206,253	412,206,253

		JAN-2019	FEB-2019	MAR-2019	APR-2019	MAY-2019	JUN-2019	JUL-2019	AUG-2019	SEP-2019	OCT-2019	NOV-2019	DEC-2019
TOTAL CONSTRUCTION COST	M	0	0	0	0	0	0	0	0	0	0	0	0
TOTAL CONSTRUCTION COST	C	371,890,778	371,890,778	371,890,778	371,890,778	371,890,778	371,890,778	371,890,778	371,890,778	371,890,778	371,890,778	371,890,778	371,890,778
INTEREST DURING CONSTRUCTION	M	0	0	0	0	0	0	0	0	0	0	0	0
INTEREST DURING CONSTRUCTION	C	40,315,474	40,315,474	40,315,474	40,315,474	40,315,474	40,315,474	40,315,474	40,315,474	40,315,474	40,315,474	40,315,474	40,315,474
TOTAL	M	0	0	0	0	0	0	0	0	0	0	0	0
TOTAL	C	412,206,253	412,206,253	412,206,253	412,206,253	412,206,253	412,206,253	412,206,253	412,206,253	412,206,253	412,206,253	412,206,253	412,206,253

		JAN-2020	FEB-2020	MAR-2020	APR-2020	MAY-2020	JUN-2020	JUL-2020	AUG-2020	SEP-2020	OCT-2020	NOV-2020	DEC-2020
TOTAL CONSTRUCTION COST	M	0	0	0	0	0	0	0	0	0	0	0	0
TOTAL CONSTRUCTION COST	C	371,890,778	371,890,778	371,890,778	371,890,778	371,890,778	371,890,778	371,890,778	371,890,778	371,890,778	371,890,778	371,890,778	371,890,778
INTEREST DURING CONSTRUCTION	M	0	0	0	0	0	0	0	0	0	0	0	0
INTEREST DURING CONSTRUCTION	C	40,315,474	40,315,474	40,315,474	40,315,474	40,315,474	40,315,474	40,315,474	40,315,474	40,315,474	40,315,474	40,315,474	40,315,474
TOTAL	M	0	0	0	0	0	0	0	0	0	0	0	0
TOTAL	C	412,206,253	412,206,253	412,206,253	412,206,253	412,206,253	412,206,253	412,206,253	412,206,253	412,206,253	412,206,253	412,206,253	412,206,253

ESTIMATE NO. : 31250A
PROJECT NO. : 12681-006
ISSUE DATE : 09/01/2011
PREP/REV : AT/BJD
APPROVED : MON

SARGENT & LUNDY

NPPD
GERALD GENTLEMAN STATION UNIT 1&2 COMMON FACILITIES
WET FGD
CASH FLOW REPORT

PRICE LEVEL 2011

CASH FLOW BY YEAR

		2011	2012	2013	2014	2015	2016	2017	2018	2019	2020
TOTAL CONSTRUCTION COST	A	0	32,903,999	97,032,517	156,342,049	85,612,213	0	0	0	0	0
TOTAL CONSTRUCTION COST	C	0	32,903,999	129,936,516	286,278,565	371,890,778	371,890,778	371,890,778	371,890,778	371,890,778	371,890,778
INTEREST DURING CONSTRUCTION	A	0	1,684,809	6,739,508	15,089,899	16,801,259	0	0	0	0	0
INTEREST DURING CONSTRUCTION	C	0	1,684,809	8,424,317	23,514,216	40,315,474	40,315,474	40,315,474	40,315,474	40,315,474	40,315,474
TOTAL	A	0	34,588,808	103,772,025	171,431,948	102,413,472	0	0	0	0	0
TOTAL	C	0	34,588,808	138,360,833	309,792,781	412,206,253	412,206,253	412,206,253	412,206,253	412,206,253	412,206,253

H:\INFOD\V\PROJECTS\Nebraska Public Power District\Gerald Gentlemen - Wet FGD\[31250A2 - Gerald Gentleman Station Unit 1&2 Common Facilities.xls]Summary Report

ESTIMATE NO. : 31251A
PROJECT NO. : 12681-006
ISSUE DATE : 09/01/2011
PREP/REV : AT, FFS/
APPROVED :MON

SARGENT & LUNDY

NPPD GERALD GENTLEMAN STATION
WET FGD - AUX POWER AND BOOSTER FANS
CONCEPTUAL COST ESTIMATE

CODE OF ACCOUNT	DESCRIPTION A	EQUIPMENT COST	MATERIAL COST	LABOR COST	TOTAL COST
21 Total	CIVIL WORK	384,000	49,333	71,778	505,111
22 Total	CONCRETE		969,481	1,984,589	2,954,070
23 Total	STEEL		107,450	165,186	272,636
24 Total	ARCHITECTURAL	3,115,190		295,779	3,410,969
31 Total	MECHANICAL EQUIPMENT	10,840,000		1,285,592	12,125,592
41 Total	ELECTRICAL EQUIPMENT	14,378,500	121,898	3,885,525	18,385,923
42 Total	RACEWAY, CABLE TRAY, & CONDUIT		1,933,139	4,608,426	6,541,565
43 Total	CONTROL & INSTRUMENTATION	80,000	1,675,927	5,948,427	7,704,354
51 Total	SUBSTATION, SWITCHYARD & TRANSMISSION LINE	1,491,844	61,425	403,933	1,957,202
60 Total	CONSTRUCTION EQUIPMENT SUPPLEMENT	297,000		150,598	447,598
90	SUBTOTAL DIRECT & CONSTRUCTION INDIRECT COST	30,586,534	4,918,653	18,799,833	54,305,020
91	OTHER DIRECT & CONSTRUCTION INDIRECT COST				
91-1	SCAFFOLDING - % of ACCT NO. 90			592,962	592,962
91-2	COST DUE TO OVERTIME WORKING 5 -10 HOUR DAYS			2,748,140	2,748,140
91-3	PER DIEM			2,630,711	2,630,711
91-4	CONSUMABLES - % of ACCT NO. 90			118,592	118,592
91-5	FREIGHT ON MATERIAL - % of ACCT NO. 90		245,933		245,933
91-6	FREIGHT ON EQUIPMENT - % of ACCT NO. 90	1,529,327			1,529,327
91-7	SALES TAX - % of ACCT NO. 90 MATERIAL & EQUIPMENT SHOWN ON MATERIAL COLUMN		1,952,785		1,952,785
91-8	MOBILIZATION/DEMOBILIZATION - % OF ACCT NO. 90			187,998	187,998
91-9	CONTRACTOR'S GENERAL AND ADMINISTRATION EXPENSE - % of ACCT NO. 90, 91-1 TO 91-8		711,737	2,507,824	3,219,561
91-10	CONTRACTOR'S PROFIT - % of ACCT NO. 90, 91-1 TO 91-8		355,869	1,253,912	1,609,780
	91 - SUBTOTAL	1,529,327	3,266,324	10,040,140	14,835,790
92	TOTAL DIRECT & CONSTRUCTION INDIRECT COST	32,115,861	8,184,976	28,839,973	69,140,810
93	INDIRECT COST				
93-1	ENGINEERING, PROCUREMENT, & PROJECT SERVICES - NOT INCLUDED				
93-2	CONSTRUCTION MANAGEMENT SUPPORT - % of ACCT NO. 92				1,037,112
93-3	S-U / COMMISSIONING - % of ACCT NO. 92				691,408
93-4	SPARE PARTS - % of ACCT NO. 92 EQUIPMENT				963,476
93-5	OWNERS COST - % of ACCT NOS. 92, 93.1, 93.2, 93.3, 93.4				1,436,656
93-6	EPC FEE - % of ACCT NOS. 92, 93.1, 93.2, 93.3, 93.4				10,774,921
	93 - TOTAL				14,903,573
94	TOTAL ESCALATION				9,490,830
94-1	ESCALATION ON EQUIPMENT - % of ACCT NO. 92	3,053,738			3,053,738
94-2	ESCALATION ON MATERIAL - % of ACCT NO. 92		955,381		955,381
94-3	ESCALATION ON LABOR - % of ACCT NO. 92			3,740,820	3,740,820
94-4	ESCALATION ON INDIRECT - % of ACCT NO. 93				1,740,890
95	TOTAL CONTINGENCY				18,707,043
95-1	CONTINGENCY ON EQUIPMENT - % of ACCT NO. 92, 94.1	7,033,920			7,033,920
95-2	CONTINGENCY ON MATERIAL - % of ACCT NO. 92, 94.2		1,828,071		1,828,071
95-3	CONTINGENCY ON LABOR - % of ACCT NO. 92, 94.3			6,516,159	6,516,159
95-4	CONTINGENCY ON INDIRECT - % of ACCT NO. 93, 94.4				3,328,893
96	TOTAL CONSTRUCTION COST				112,242,255
97	INTEREST DURING CONSTRUCTION (COMPOUNDED MONTHLY)				12,470,423
98	TOTAL PROJECT COST				124,712,679

ESTIMATE NO. : 31251A
PROJECT NO. : 12681-006
ISSUE DATE : 09/01/2011
PREP/REV : AT, FFS/
APPROVED :MON

SARGENT & LUNDY

NPPD GERALD GENTLEMAN STATION
WET FGD - AUX POWER AND BOOSTER FANS
CONCEPTUAL COST ESTIMATE

CODE OF ACCOUNT	DESCRIPTION A	EQUIPMENT COST	MATERIAL COST	LABOR COST	TOTAL COST

H:\INFODIV\PROJECTS\Nebraska Public Power District\Gerald Gentlem EXCEL VERSION 012711

ESTIMATE NO. : 31251A
PROJECT NO. : 12681-006
ISSUE DATE : 09/01/2011
PREP/REV : AT, FFS/
APPROVED : MON

SARGENT & LUNDY

NPPD GERALD GENTLEMAN STATION
WET FGD - AUX POWER AND BOOSTER FANS
CONCEPTUAL COST ESTIMATE

PRICE LEVEL: 2011 LOCATION: Omaha, NE WAGE RATE: 11NEOMA PRODUCTIVITY FACTOR: 1.1

CODE OF ACCOUNT	DESCRIPTION A	DESCRIPTION B	QTY	UM	EQUIPMENT COST	MATERIAL COST	MAN-HOURS	CREW WAGE RATE	LABOR COST	TOTAL COST
21	**CIVIL WORK**									
21-53	PILING & CAISSON									
21-53-1	AUGER CAST PILES 18" DIA. X 70' LONG	BOOSTER FAN FOUNDATION	120	EA	384,000			102.76		384,000
21-53-2	CAISSONS	4'W X 30'L- "H" FRAME STRUCTURE(2 LEGGED)	4	EA		16,148	242	102.76	24,868	41,016
21-53-3	CAISSONS	4'W X 30'L- 70' STEEL POLE (1 LEGGED)	1	EA		4,037	61	102.76	6,217	10,254
21-53-4	CAISSONS	4'W X 15'L- 3 PHASE DISCONNECT SWITCHES (2) LEGGED	4	EA		8,072	119	102.76	12,208	20,280
21-53-5	CAISSONS	3'W X 12'L- SINGLE PHASE DISCONNECT SWITCHES	4	EA		4,276	57	102.76	5,878	10,154
21-53-6	CAISSONS	2'W X 7'L- 5" ALUMINUM BUS	50	EA		16,800	220	102.76	22,607	39,407
	21-53 Total				384,000	49,333	699		71,778	505,111
	21 Total				384,000	49,333	699		71,778	505,111
22	**CONCRETE**									
22-13	CONCRETE									
22-13-1	CONCRETE FOUNDATIONS FOR MAIN ELECTRICAL EQUIPMENT BUILDING	15' X 95' =1425 SF	2	EA		48,056	1,250	66.22	82,749	130,805
22-13-2	CONCRETE FOUNDATIONS FOR REAG. PREP ELECTRICAL EQUIPMENT BUILDING	15'W X 40'LX15' H	1	EA		24,665	614	66.22	40,646	65,311
22-13-3	CONCRETE	BOOSTER FAN FOUNDATIONS	1,200	CY		300,000	9,900	66.22	655,578	955,578
22-13-4	CONCRETE	UNLOADING BUILDING ELECTRICAL ROOM	1,200	CY		300,000	9,900	66.22	655,578	955,578
22-13-5	CONCRETE FOUNDATIONS FOR 230KV BREAKERS	12'W X 14'LX 3'D	6	EA		29,502	924	102.76	94,950	124,452
22-13-6	FOUNDATION FOR 45/60MVA -230KV TRANSFORMERS	32'W X 60'L X 3'D	2	EA		100,286	2,704	56.12	151,737	252,023
22-13-7	FOUNDATION FOR 45/60MVA -24KV TRANSFORMERS	24'W X 52'L X 3'D	2	EA		66,508	1,894	56.12	106,303	172,811
22-13-8	FOUNDATION FOR 1000/1500KVA TRANSFORMER	12'W X 14'L X 2'D	8	EA		29,408	1,074	56.12	60,250	89,658
22-13-9	FOUNDATION FOR 2000/2666KVA TRANSFORMER	15'W X 20'L X 3'D	8	EA		71,056	2,438	56.12	136,798	207,854
	22-13 Total					969,481	30,697		1,984,589	2,954,070
	22 Total					969,481	30,697		1,984,589	2,954,070
23	**STEEL**									
23-25	ROLLED SHAPE									
23-25-1	ROLLED SHAPE (SERVICE PLATFORM WITH HANDRAIL & PAINTING) FOR REAG REP BLDG	75'+390'+265'=730 SF	730	SF		32,850	683	80.14	54,700	87,550
23-25-2	ROLLED SHAPE (SERVICE PLATFORM WITH HANDRAIL & PAINTING) FOR MAIN ELEC BLDG	100'+300'=400 SF	400	SF		18,000	374	80.14	29,972	47,972
23-25-3	ROLLED SHAPE (10' W STAIRS & PAINTING) FOR REAG REP BLDG	10'W STAIRS (9 STEPS)	9	EA		4,500	50	80.14	3,967	8,467
23-25-4	ROLLED SHAPE (10' W STAIRS & PAINTING) FOR MAIN ELEC BLDG	10'W STAIRS (9 STEPS)	9	EA		4,500	50	80.14	3,967	8,467

ESTIMATE NO. : 31251A
PROJECT NO. : 12681-006
ISSUE DATE : 09/01/2011
PREP/REV : AT, FFS/
APPROVED : MON

SARGENT & LUNDY

NPPD GERALD GENTLEMAN STATION
WET FGD - AUX POWER AND BOOSTER FANS
CONCEPTUAL COST ESTIMATE

PRICE LEVEL: 2011 LOCATION: Omaha, NE WAGE RATE: 11NEOMA PRODUCTIVITY FACTOR: 1.1

CODE OF ACCOUNT	DESCRIPTION A	DESCRIPTION B	QTY	UM	EQUIPMENT COST	MATERIAL COST	MAN-HOURS	CREW WAGE RATE	LABOR COST	TOTAL COST
23-25-5	ROLLED SHAPE (5' W STAIRS & PAINTING) FOR REAG REP BLDG	5'W STAIRS (9 STEPS)	9	EA		3,600	30	80.14	2,380	5,980
23-25-6	ROLLED SHAPE (5' W STAIRS & PAINTING) FOR MAIN ELEC BLDG	5'W STAIRS (9 STEPS)	9	EA		3,600	30	80.14	2,380	5,980
23-25-7	SIGN & FOR NEW PRE-ENGINEERED BUILDINGS	ALLOWANCE	1	LT		5,000	26	80.14	2,116	7,116
23-25-8	STRUCTURE STEEL SUPPORT FOR DISCONNECT SWITCHES	SINGLE PHASE	4	EA		3,000	53	100.22	5,292	8,292
23-25-9	STRUCTURE STEEL SUPPORT FOR 5" ALUMINUM BUS		50	EA		30,000	550	100.22	55,121	85,121
23-25-10	STRUCTURE STEEL SUPPORT FOR DISCONNECT SWITCHES	3 PHASE	2	EA		2,400	53	100.22	5,292	7,692
	23-25 Total					107,450	1,897		165,186	272,636
	23 Total					107,450	1,897		165,186	272,636
24	**ARCHITECTURAL**									
24-35	PRE-ENGINEERED BUILDING (PREFABRICATED)									
24-35-1	MAIN ELECTRICAL BUILDING W/ HVAC, LIGHTING (MOC, SWGR, CONTROL PANELS PRICED SEPARATELY)	15' X 95' =1425 SF	2	EA	2,035,750		1,568	100.22	157,095	2,192,845
24-35-2	REAGENT PREP ELECTRICAL BUILDING W/ HVAC, LIGHTING, UPS W/BATTERY & CHARGER, PHONE JACK, AUXILIARY POWER MODIFICATION	22'W X 68' L=1496SF	1	EA	770,440		823	100.22	82,461	852,901
24-35-3	UNLOADING BUILDING ELECTRICAL ROOM	15'W X 40'LX15' H	600	SF	309,000		561	100.22	56,223	365,223
	24-35 Total				3,115,190		2,951		295,779	3,410,969
	24 Total				3,115,190		2,951		295,779	3,410,969
31	**MECHANICAL EQUIPMENT**									
31-35	FANS & ACCESSORIES (EXCL HVAC)									
31-35-1	BOOSTER FANS - (4 FANS) 2 FANS PER UNIT. (4 MOTORS) 2 MOTOR PER UNIT	2X100% AXIAL FANS, INCLUDING MOTORS 7.2KV 3 PHASE - VENDOR QUOTE FROM TLT-BABCOCK	4	EA	10,840,000		15,400	83.48	1,285,592	12,125,592
31-35-2	MECHANICAL EQUIPMENT COST FOR FGD ZLD SYSTEM INCLUDED IN ESTIMATE 31250A	(ELECTRICAL CONNECTION TO VARIOUS COMPONENTS LISTED UNDER AQUATECH QUOTE INCLDED IN ELECTRICAL SECTION								
	31-35 Total				10,840,000		15,400		1,285,592	12,125,592
	31 Total				10,840,000		15,400		1,285,592	12,125,592
41	**ELECTRICAL EQUIPMENT**									
41-13	BUS DUCT									
41-13-1	ISOLATED PHASE BUS DUCT	24KV, 2000AMP	300	LF	227,100		1,848	87.40	161,515	388,615
41-13-2	3000A - 15KV CABLE BUS	8 (1500')	12,000	LF	3,600,000		42,768	56.12	2,400,140	6,000,140
	41-13 Total				3,827,100		44,616		2,561,655	6,388,755

ESTIMATE NO. : 31251A
PROJECT NO. : 12681-006
ISSUE DATE : 09/01/2011
PREP/REV : AT, FFS/
APPROVED : MON

SARGENT & LUNDY

NPPD GERALD GENTLEMAN STATION
WET FGD - AUX POWER AND BOOSTER FANS
CONCEPTUAL COST ESTIMATE

PRICE LEVEL: 2011 LOCATION: Omaha, NE WAGE RATE: 11NEOMA PRODUCTIVITY FACTOR: 1.1

CODE OF ACCOUNT	DESCRIPTION A	DESCRIPTION B	QTY	UM	EQUIPMENT COST	MATERIAL COST	MAN-HOURS	CREW WAGE RATE	LABOR COST	TOTAL COST
41-31	GROUNDING									
41-31-1	3/4"- 20' LONG COPPER GND ROD		46	EA		9,200	101	87.40	8,845	18,045
41-31-2	# 500 BARE COPPER WIRE		2,300	LF		20,608	438	87.40	38,254	58,862
41-31-3	# 4/0 BARE COPPER WIRE		4,600	LF		18,906	607	87.40	53,069	71,975
41-31-4	CADWELD SPLICE & TO #500 & #4/0 GND WIRE			EA				87.40		
41-31-5	GROUNDING	500 KCM BARE COPPER GNV CAR THAWING SHED	400	LF	3,584		304	87.40	26,535	30,119
41-31-6	TESTING	TEST & DOCUMENTATION	1	LT			159	87.40	13,937	13,937
	41-31 Total					52,298	1,609		140,640	192,938
41-37	LIGHTING ACCESSORY (FIXTURE)									
41-37-1	PERIMETER & ROADWAY LIGHTING	400W, 277V + POLE & CONCRETE BASE	20	EA	100,000		176	87.40	15,382	115,382
41-37-2	LIGHTING TRANSFORMER	45KVA, 3PHASE, 480V-277/120V	4	EA	30,000		141	87.40	12,306	42,306
41-37-3	LIGHTING & RECEPTACLE PANELS	200A, 277/120V + 42 C BREAKERS	4	EA	4,800		70	87.40	6,153	10,953
41-37-4	CONDUIT & WIRE	ALLOWANCE	1	LT		50,000	2,200	87.40	192,280	242,280
41-37-5	MISCELLANEOUS LIGHTING HDWR	PHOTO CELL/LTG CONTACTORS	1	LT		10,000	550	87.40	48,070	58,070
	41-37 Total				134,800	60,000	3,137		274,191	468,991
41-45	MOTOR CONTROL CENTER (MCC)									
41-45-1	MCC-1200A, 480V, 7VER. SEC. WITH AUXILIARY POWER MODIFICATIONS		4	EA	238,000			87.40		238,000
41-45-2	MCC-600A, 480V, 7VER. SEC. WITH AUXILIARY POWER MODIFICATIONS		6	EA	294,000			87.40		294,000
41-45-3	MCC-600A, 480V, 7VER. SEC. WITH AUXILIARY POWER MODIFICATIONS		2	EA	98,000		123	87.40	10,768	108,768
41-45-4	TESTING & DEBUG /STARTUP	TEST & DOCUMENTATION	1	LT			26	87.40	2,307	2,307
	41-45 Total				630,000		150		13,075	643,075
41-47	PANEL: CONTROL, DISTRIBUTION, & RELAY									
41-47-1	CIRCUIT BREAKER	7.2 KV CT, CAR THAWING SHED	4	EA	180,000		352	68.77	24,207	204,207
	41-47 Total				180,000		352		24,207	204,207
41-51	POWER TRANSFORMER									
41-51-1	RATs (START UP XFMR)	45/60MVA, 230KV-7.2/7.2KV	2	EA	3,000,000		4,840	64.73	313,293	3,313,293
41-51-2	UAT (UNIT AUX XFMR)	45/60MVA, 24KV-7.2/7.2KV	2	EA	2,200,000		3,850	64.73	249,211	2,449,211
41-51-3	7.2KV-480V- 1000/1500KVA , W/AUXILIARY POWER	1000/1500KVA- 7200/480V XFMR	8	EA	680,000		1,760	64.73	113,925	793,925
41-51-4	7.2KV-480V- 2000/2666KVA , W/AUXILIARY POWER	2000/2666KVA- 7200/480V XFMR	2	EA	300,000		660	64.73	42,722	342,722
41-51-5	TESTING	TEST & DOCUMENTATION	1	LT			493	87.40	43,071	43,071

ESTIMATE NO. : 31251A
PROJECT NO. : 12681-006
ISSUE DATE : 09/01/2011
PREP/REV : AT, FFS/
APPROVED : MON

SARGENT & LUNDY

NPPD GERALD GENTLEMAN STATION
WET FGD - AUX POWER AND BOOSTER FANS
CONCEPTUAL COST ESTIMATE

PRICE LEVEL: 2011 LOCATION: Omaha, NE WAGE RATE: 11NEOMA PRODUCTIVITY FACTOR: 1.1

CODE OF ACCOUNT	DESCRIPTION A	DESCRIPTION B	QTY	UM	EQUIPMENT COST	MATERIAL COST	MAN-HOURS	CREW WAGE RATE	LABOR COST	TOTAL COST
41-51-6	POWER TRANSFORMER	7.2 KV/ 480 V OIL FILLED TRANSFORMERS 1500/2000 KVA, CAR THAWING SHED	4	EA	360,000		660	68.77	45,388	405,388
	41-51 Total				6,540,000		12,263		807,609	7,347,609
41-55	SWITCHGEAR									
41-55-1	SWITCHGEAR	7.2KV, PRE-INSTALLED IN NEW 15'W X 95'L MAIN BLDG	4	EA	1,760,000			64.73		1,760,000
41-55-3	SWITCHGEAR	480V, FGD PRE INSTALLED - IN NEW 15'W X 95'L MAIN BLDG	2	EA	330,000			64.73		330,000
41-55-4	SWITCHGEAR	7.2KV, PRE- INSTALLED IN 22'W X 68'L REAGENT BUILDING	1	EA	440,000			64.73		440,000
41-55-5	SWITCHGEAR	480V, INSTALLED IN 22'W X 68'L REAGENT BUILDING	1	EA	165,000			64.73		165,000
41-55-6	SWITCHGEAR	480V, WASTE DIS INSTALLED IN 22'W X 68'L REAGENT BUILDING	1	EA	165,000			64.73		165,000
41-55-7	SWITCHGEAR	480V, INSTALLED IN LIME STONE RAIL CAR UNLOADING ELECTRICAL ROOM	1	EA	165,000		220	64.73	14,241	179,241
41-55-8	TEST	TEST & DOCUMENTATION	1	EA			158	64.73	10,253	10,253
	41-55 Total				3,025,000		378		24,494	3,049,494
41-99	MISCELLANEOUS ELECTRICAL									
41-99-1	SUPPORT POLES	CAR THAWING SHED	6	EA	36,600		297	68.77	20,425	57,025
41-99-2	MISCELLANEOUS BUILDING ELECTRICAL	HYDROGEN BUILDING (40'X20'X15')	800	SF		9,600	220	87.40	19,228	28,828
41-99-3	MISCELLANEOUS BUILDING ELECTRICAL	TRANSFORMER OIL INTERCEPTORS ALLOWANCE	1	LT	5,000			87.40		5,000
	41-99 Total				41,600	9,600	517		39,653	90,853
	41 Total				14,378,500	121,898	63,022		3,885,525	18,385,923
42	**RACEWAY, CABLE TRAY, & CONDUIT**									
42-13	CABLE TRAY									
42-13-1	ALUMINUM CABLE TRAY	12" ALUMINUM CABLE TRAY	2,925	LF		69,703	3,571	63.00	225,000	294,703
42-13-2	ALUMINUM CABLE TRAY	18" ALUMINUM CABLE TRAY	2,475	LF		67,766	3,948	63.00	248,700	316,466
42-13-3	ALUMINUM CABLE TRAY	24" ALUMINUM CABLE TRAY	2,925	LF		92,225	5,631	63.00	354,729	446,955
42-13-4	ALUMINUM CABLE TRAY	30" ALUMINUM CABLE TRAY	2,250	LF		78,120	4,826	63.00	304,054	382,174
42-13-5	ALUMINUM CABLE TRAY	36" ALUMINUM CABLE TRAY	3,825	LF		143,476	8,836	63.00	556,652	700,128
	42-13 Total					451,289	26,812		1,689,136	2,140,425
42-15	CONDUIT									
42-15-1	RGS CONDUIT	3/4" RGS CONDUIT	28,800	LF		99,360	6,146	63.00	387,193	486,553
42-15-2	RGS CONDUIT	1" RGS CONDUIT	22,500	LF		110,700	5,915	63.00	372,661	483,361
42-15-3	RGS CONDUIT	2" RGS CONDUIT	13,500	LF		147,825	5,227	63.00	329,314	477,139

ESTIMATE NO. : 31251A
PROJECT NO. : 12681-006
ISSUE DATE : 09/01/2011
PREP/REV : AT, FFS/
APPROVED : MON

SARGENT & LUNDY

NPPD GERALD GENTLEMAN STATION
WET FGD - AUX POWER AND BOOSTER FANS
CONCEPTUAL COST ESTIMATE

PRICE LEVEL: 2011 LOCATION: Omaha, NE WAGE RATE: 11NEOMA PRODUCTIVITY FACTOR: 1.1

CODE OF ACCOUNT	DESCRIPTION A	DESCRIPTION B	QTY	UM	EQUIPMENT COST	MATERIAL COST	MAN-HOURS	CREW WAGE RATE	LABOR COST	TOTAL COST
42-15-4	RGS CONDUIT	3" RGS CONDUIT	9,900	LF		226,215	7,024	63.00	442,515	668,730
42-15-5	RGS CONDUIT	4" RGS CONDUIT	13,500	LF		436,050	11,984	63.00	754,989	1,191,039
42-15-6	RGS CONDUIT	5" RGS CONDUIT	8,100	LF		461,700	10,042	63.00	632,619	1,094,319
	42-15 Total					1,481,850	46,338		2,919,290	4,401,140
42-99	UNDERGROUND DUCT BANKS	NOT REQUIRED								
	42-99 Total									
	42 Total					1,933,139	73,150		4,608,426	6,541,565
43	**CONTROL & INSTRUMENTATION**									
43-13	CONTROL & INSTRUMENT CABLE									
43-13-1	6 STRAND FIBER OPTIC CABLE		7,500	LF		18,150	578	87.40	50,474	68,624
43-13-2	CAT5e CABLE		24,000	LF		3,120	713	87.40	62,299	65,419
43-13-3	1 PR #16 SHLD CABLE		18,000	LF		11,340	535	87.40	46,724	58,064
43-13-4	2 PR #16 SHLD CABLE		18,000	LF		16,380	634	87.40	55,377	71,757
43-13-5	8 PR #16 SHLD CHROM/CONST CABLE		18,000	LF		65,520	1,782	87.40	155,747	221,267
43-13-6	7/C # 14 AWG SH		10,000	LF		13,700	583	87.40	50,954	64,654
43-13-7	9/C # 14 AWG SH		12,000	LF		19,560	845	87.40	73,836	93,396
43-13-8	3/C # 14 AWG		22,000	LF		14,080	726	87.40	63,452	77,532
43-13-9	2/C # 14 AWG		25,000	LF		14,250	743	87.40	64,895	79,145
43-13-10	1/C # 14 AWG		35,000	LF		4,900	924	87.40	80,758	85,658
43-13-11	37/C # 16 AWG SH		15,000	LF		94,350	8,580	87.40	749,892	844,242
43-13-12	INSTRUMENT & CONTROL WIRE TERMINATIONS		1	LT		3,401	182	87.40	15,903	19,305
43-13-13	TEST	TEST & DOCUMENTATION	1	LT			562	87.40	49,152	49,152
	43-13 Total					278,751	17,385		1,519,461	1,798,212
43-15	HIGH VOLTAGE POWER CABLE & TERMINATION									
43-15-1	HIGH VOLTAGE POWER CABLE	3/C 4/0 15 KV CABLE, CAR THAWING SHED	2,500	LF		46,025		87.40		46,025
	43-15 Total					46,025				46,025
43-17	LOW VOLTAGE POWER CABLE & TERMINATION									
43-17-1	3/C # 750KCMIL - 600V		3,500	LF		150,535	2,657	87.40	232,178	382,713
43-17-2	3/C TRI # 500KCMIL - 600V		1,300	LF		38,558	987	87.40	86,238	124,796
43-17-3	3/C # 250KCMIL - 600V		3,500	LF		72,730	2,657	87.40	232,178	304,908
43-17-4	3/C # 4/0 AWG - 600V		3,700	LF		59,348	2,116	87.40	184,973	244,321
43-17-5	3/C # 1/0 AWG - 600V		3,700	LF		30,340	2,116	87.40	184,973	215,313
43-17-6	3/C # 6 AWG - 600V		12,100	LF		41,503	705	87.40	61,655	103,158
43-17-7	3/C # 8 AWG W/GND - 600V		13,200	LF		35,376	770	87.40	67,260	102,636
43-17-8	3/C # 10 AWG W/GND 600V		16,000	LF		32,960	792	87.40	69,221	102,181
43-17-9	3/C # 12 AWG 600V		37,000	LF		31,450	1,221	87.40	106,715	138,165
43-17-10	1/C # 12 AWG W/GND 600V		61,600	LF		11,704	1,016	87.40	88,833	100,537
43-17-11	600 VOLT POWER WIRE TERMINATION		1	LT		7,020	253	87.40	22,112	29,132

ESTIMATE NO. : 31251A
PROJECT NO. : 12681-006
ISSUE DATE : 09/01/2011
PREP/REV : AT, FFS/
APPROVED : MON

SARGENT & LUNDY

NPPD GERALD GENTLEMAN STATION
WET FGD - AUX POWER AND BOOSTER FANS
CONCEPTUAL COST ESTIMATE

PRICE LEVEL: 2011 LOCATION: Omaha, NE WAGE RATE: 11NEOMA PRODUCTIVITY FACTOR: 1.1

CODE OF ACCOUNT	DESCRIPTION A	DESCRIPTION B	QTY	UM	EQUIPMENT COST	MATERIAL COST	MAN-HOURS	CREW WAGE RATE	LABOR COST	TOTAL COST
43-17-12	LOW VOLTAGE POWER CABLE	3/C #6 600V CABLE, CAR THAWING SHED	1,000	LF		3,430		87.40		3,430
43-17-13	TEST	TEST & DOCUMENTATION	1	LT			431	87.40	37,639	37,639
	43-17 Total					514,954	15,721		1,373,975	1,888,930
43	MEDIUM VOLTAGE POWER CABLE & TERMINATION									
43-21	18KV WIRE AND TERMINATION									
43-21-1	WIRE	1/C #750 KCMIL 8KV	24,000	LF		383,760	6,072	87.40	530,693	914,453
43-21-2	WIRE	1/C #500 KCMIL 8KV POWER FEEDS	15,600	LF	182,520		3,947	87.40	344,950	527,470
43-21-3	WIRE	1/C #4/0 KCMIL 8KV POWER FEEDS	18,000	LF	111,780		2,317	87.40	202,471	314,251
43-21-4	WIRE TERMINATION	# 750- 8KV WIRE TERMINTION	96	EA		31,200	753	87.40	65,806	97,006
43-21-5	WIRE TERMINATION	# 500 - 8KV WIRE TERMINTION	72	EA		18,504	455	87.40	39,802	58,306
43-21-6	WIRE TERMINATION	# 4/0 - 8KV WIRE TERMINTION	432	EA		108,432	1,426	87.40	124,597	233,029
43-21-7	TESTING	TEST & DOCUMENTATION	1	LT			19,985	87.40	1,746,672	1,746,672
	43-21 Total					836,196	34,954		3,054,991	3,891,187
43-99	FROZEN LIMESTONE CRACKERS ELECTRICAL WORK	INCLUDING CABLES, CONDUITS, MCCS, ETC.	1	LS	80,000			87.40		80,000
	43-99 Total				80,000					80,000
	43 Total				80,000	1,675,927	68,060		5,948,427	7,704,354
51	**SUBSTATION, SWITCHYARD & TRANSMISSION LINE**									
51-13	CONDUCTOR & WIRE									
51-13-1	954 MCM ACSR		7,000	LF		20,650	2,695	60.86	164,018	184,668
51-13-2	# 954 ACSR TERMINATION		12	EA		30,000	106	60.86	6,427	36,427
51-13-3	TEST	TEST & DOCUMENTATION	1	LT			13	60.86	803	803
	51-13 Total					50,650	2,814		171,248	221,898
51-15	ELECTRICAL EQUIPMENT (EXCL. POWER TRANSFORMER)									
51-15-1	2000A, 230KV BREAKERS, 3PHASE- SF6		6	EA	990,000		990	87.40	86,526	1,076,526
51-15-2	2000A, 230KV DISCONNECT SWITCH, 3 PHASE	VERTICAL BREAK	2	EA	96,800		264	87.40	23,074	119,874
51-15-3	2000A, 230KV DISCONNECT SWITCH, 3 PHASE	CENTER BREAK	4	EA	130,944		440	87.40	38,456	169,400
51-15-4	230KV CTs		9	EA	89,100		59	87.40	5,192	94,292
51-15-5	5" ALUMINUM TUBULAR BUS		500	LF		9,875	220	87.40	19,228	29,103
51-15-6	5" TUBULAR BUS TERMINATION TO OH WIRE & TRANSFORMER		12	EA		900	33	87.40	2,884	3,784
	51-15 Total				1,306,844	10,775	2,006		175,359	1,492,978
51-27	TRANSMISSION TOWER, HARDWARE ASSEMBLY									
51-27-1	62.5FT "H" FRAME WITH 230KV, DOUBLE CIRCUIT INSULATORS	2 LEGGED STRUCTURE STEEL	2	EA	130,000		440	100.22	44,097	174,097

ESTIMATE NO. : 31251A
PROJECT NO. : 12681-006
ISSUE DATE : 09/01/2011
PREP/REV : AT, FFS/
APPROVED : MON

SARGENT & LUNDY

NPPD GERALD GENTLEMAN STATION
WET FGD - AUX POWER AND BOOSTER FANS
CONCEPTUAL COST ESTIMATE

PRICE LEVEL: 2011 LOCATION: Omaha, NE WAGE RATE: 11NEOMA PRODUCTIVITY FACTOR: 1.1

CODE OF ACCOUNT	DESCRIPTION A	DESCRIPTION B	QTY	UM	EQUIPMENT COST	MATERIAL COST	MAN-HOURS	CREW WAGE RATE	LABOR COST	TOTAL COST
51-27-2	70' FT STEEL POLE WITH 230KV INSULATORS (DOUBLE CIRCUIT CONDUCTORS)	STEEL POLE	1	EA	55,000		132	100.22	13,229	68,229
	51-27 Total				185,000		572		57,326	242,326
	51 Total				1,491,844	61,425	5,392		403,933	1,957,202
60	**CONSTRUCTION EQUIPMENT SUPPLEMENT**									
60-10-1	CONSTRUCTION EQUIPMENT SUPPLEMENT	MAN LIFT & CRAIN WITH OPERATOR (18 MONTHS @ 25000)	1	LT	270,000		1,804	83.48	150,598	420,598
60-10-2	CONSTRUCTION TEMPORARY POWER COST	ALLOWANCE (18 MONTHS @ $1500)	1	LT	27,000			83.48		27,000
	60-10 Total				297,000		1,804		150,598	447,598
	60 Total				297,000		1,804		150,598	447,598
90	SUBTOTAL DIRECT & CONSTRUCTION INDIRECT COST				30,586,534	4,918,653	263,071		18,799,833	54,305,020
91	OTHER DIRECT & CONSTRUCTION INDIRECT COST									
91-1	SCAFFOLDING - % of ACCT NO. 90		2.5	%					592,962	592,962
91-2	COST DUE TO OVERTIME WORKING 5 -10 HOUR DAYS		1.0	EA			22,876		2,748,140	2,748,140
91-3	PER DIEM		10.0	$/HR					2,630,711	2,630,711
91-4	CONSUMABLES - % of ACCT NO. 90		0.5	%					118,592	118,592
91-5	FREIGHT ON MATERIAL - % of ACCT NO. 90		5.0	%		245,933				245,933
91-6	FREIGHT ON EQUIPMENT - % of ACCT NO. 90		5.0	%	1,529,327					1,529,327
91-7	SALES TAX - % of ACCT NO. 90 MATERIAL & EQUIPMENT SHOWN ON MATERIAL COLUMN		5.5	%		1,952,785				1,952,785
91-8	MOBILIZATION/DEMOBILIZATION - % OF ACCT NO. 90		1.0	%					187,998	187,998
91-9	CONTRACTOR'S GENERAL AND ADMINISTRATION EXPENSE - % of ACCT NO. 90, 91-1 TO 91-8		10.0	%		711,737			2,507,824	3,219,561
91-10	CONTRACTOR'S PROFIT - % of ACCT NO. 90, 91-1 TO 91-8		5.0	%		355,869			1,253,912	1,609,780
	91 - SUBTOTAL				1,529,327	3,266,324			10,040,140	14,835,790
92	TOTAL DIRECT & CONSTRUCTION INDIRECT COST				32,115,861	8,184,976	265,947		28,839,973	69,140,810
93	INDIRECT COST									
93-1	ENGINEERING, PROCUREMENT, & PROJECT SERVICES - NOT INCLUDED	INCLUDED IN UNIT 1&2 COMMON FACILITIES								
93-2	CONSTRUCTION MANAGEMENT SUPPORT - % of ACCT NO. 92		1.5	%						1,037,112
93-3	S-U / COMMISSIONING - % of ACCT NO. 92		1.0	%						691,408
93-4	SPARE PARTS - % of ACCT NO. 92 EQUIPMENT		3.0	%						963,476
93-5	OWNERS COST - % of ACCT NOS. 92, 93.1, 93.2, 93.3, 93.4		2.0	%						1,436,656

ESTIMATE NO. : 31251A
PROJECT NO. : 12681-006
ISSUE DATE : 09/01/2011
PREP/REV : AT, FFS/
APPROVED : MON

SARGENT & LUNDY

NPPD GERALD GENTLEMAN STATION
WET FGD - AUX POWER AND BOOSTER FANS
CONCEPTUAL COST ESTIMATE

PRICE LEVEL: 2011 LOCATION: Omaha, NE WAGE RATE: 11NEOMA PRODUCTIVITY FACTOR: 1.1

CODE OF ACCOUNT	DESCRIPTION A	DESCRIPTION B	QTY	UM	EQUIPMENT COST	MATERIAL COST	MAN-HOURS	CREW WAGE RATE	LABOR COST	TOTAL COST
93-6	EPC FEE - % of ACCT NOS. 92, 93.1, 93.2, 93.3, 93.4		15.0	%						10,774,921
	93 - TOTAL									14,903,573
94	TOTAL ESCALATION									9,490,830
94-1	ESCALATION ON EQUIPMENT - % of ACCT NO. 92		9.5	%	3,053,738					3,053,738
94-2	ESCALATION ON MATERIAL - % of ACCT NO. 92		11.7	%		955,381				955,381
94-3	ESCALATION ON LABOR - % of ACCT NO. 92		13.0	%					3,740,820	3,740,820
94-4	ESCALATION ON INDIRECT - % of ACCT NO. 93		11.7	%						1,740,890
95	TOTAL CONTINGENCY									18,707,043
95-1	CONTINGENCY ON EQUIPMENT - % of ACCT NO. 92, 94.1		20.0	%	7,033,920					7,033,920
95-2	CONTINGENCY ON MATERIAL - % of ACCT NO. 92, 94.2		20.0	%		1,828,071				1,828,071
95-3	CONTINGENCY ON LABOR - % of ACCT NO. 92, 94.3		20.0	%					6,516,159	6,516,159
95-4	CONTINGENCY ON INDIRECT - % of ACCT NO. 93, 94.4		20.0	%						3,328,893
96	TOTAL CONSTRUCTION COST									112,242,255
97	INTEREST DURING CONSTRUCTION (COMPOUNDED MONTHLY)									12,470,423
98	TOTAL PROJECT COST									124,712,679

H:\INFODIV\PROJECTS\Nebraska Public Power District\Gerald Gentlemen - Wet FGD\[31251A2 - Gerald Gentleman Station AUX EXCEL VERSION 012711

ESTIMATE NO. : 31251A
PROJECT NO. : 12681-006
ISSUE DATE : 09/01/2011
PREP/REV : AT, FFS/
APPROVED : MON

SARGENT & LUNDY

NPPD GERALD GENTLEMAN STATION
WET FGD - AUX POWER AND BOOSTER FANS
CASH FLOW REPORT

PRICE LEVEL 2011

CASH FLOW BY MONTH

		JAN-2011	FEB-2011	MAR-2011	APR-2011	MAY-2011	JUN-2011	JUL-2011	AUG-2011	SEP-2011	OCT-2011	NOV-2011	DEC-2011
TOTAL CONSTRUCTION COST	M	0	0	0	0	0	0	0	0	0	0	0	0
TOTAL CONSTRUCTION COST	C	0	0	0	0	0	0	0	0	0	0	0	0
INTEREST DURING CONSTRUCTION	M	0	0	0	0	0	0	0	0	0	0	0	0
INTEREST DURING CONSTRUCTION	C	0	0	0	0	0	0	0	0	0	0	0	0
TOTAL	M	0	0	0	0	0	0	0	0	0	0	0	0
TOTAL	C	0	0	0	0	0	0	0	0	0	0	0	0

		JAN-2012	FEB-2012	MAR-2012	APR-2012	MAY-2012	JUN-2012	JUL-2012	AUG-2012	SEP-2012	OCT-2012	NOV-2012	DEC-2012
TOTAL CONSTRUCTION COST	M	10,897,570	0	0	0	0	0	0	0	0	0	0	0
TOTAL CONSTRUCTION COST	C	10,897,570	10,897,570	10,897,570	10,897,570	10,897,570	10,897,570	10,897,570	10,897,570	10,897,570	10,897,570	10,897,570	10,897,570
INTEREST DURING CONSTRUCTION	M	45,443	45,632	45,823	46,014	46,206	46,398	46,592	46,786	46,981	47,177	47,374	47,571
INTEREST DURING CONSTRUCTION	C	45,443	91,075	136,898	182,912	229,117	275,516	322,107	368,893	415,874	463,052	510,425	557,997
TOTAL	M	10,943,013	45,632	45,823	46,014	46,206	46,398	46,592	46,786	46,981	47,177	47,374	47,571
TOTAL	C	10,943,013	10,988,645	11,034,466	11,080,481	11,126,687	11,173,085	11,219,677	11,266,463	11,313,444	11,360,621	11,407,995	11,455,566

		JAN-2013	FEB-2013	MAR-2013	APR-2013	MAY-2013	JUN-2013	JUL-2013	AUG-2013	SEP-2013	OCT-2013	NOV-2013	DEC-2013
TOTAL CONSTRUCTION COST	M	31,120,523	0	0	0	0	0	0	0	0	0	0	0
TOTAL CONSTRUCTION COST	C	42,018,093	42,018,093	42,018,093	42,018,093	42,018,093	42,018,093	42,018,093	42,018,093	42,018,093	42,018,093	42,018,093	42,018,093
INTEREST DURING CONSTRUCTION	M	177,542	178,283	179,026	179,773	180,522	181,275	182,031	182,790	183,552	184,318	185,086	185,858
INTEREST DURING CONSTRUCTION	C	735,539	913,822	1,092,848	1,272,620	1,453,143	1,634,418	1,816,449	1,999,239	2,182,791	2,367,109	2,552,195	2,738,053
TOTAL	M	31,298,065	178,283	179,026	179,773	180,522	181,275	182,031	182,790	183,552	184,318	185,086	185,858
TOTAL	C	42,753,632	42,931,914	43,110,941	43,290,713	43,471,235	43,652,510	43,834,541	44,017,331	44,200,884	44,385,201	44,570,288	44,756,146

		JAN-2014	FEB-2014	MAR-2014	APR-2014	MAY-2014	JUN-2014	JUL-2014	AUG-2014	SEP-2014	OCT-2014	NOV-2014	DEC-2014
TOTAL CONSTRUCTION COST	M	46,041,127	0	0	0	0	0	0	0	0	0	0	0
TOTAL CONSTRUCTION COST	C	88,059,220	88,059,220	88,059,220	88,059,220	88,059,220	88,059,220	88,059,220	88,059,220	88,059,220	88,059,220	88,059,220	88,059,220
INTEREST DURING CONSTRUCTION	M	378,625	380,203	381,789	383,381	384,980	386,585	388,197	389,816	391,441	393,074	394,713	396,359
INTEREST DURING CONSTRUCTION	C	3,116,678	3,496,881	3,878,670	4,262,051	4,647,031	5,033,616	5,421,813	5,811,629	6,203,070	6,596,144	6,990,857	7,387,216
TOTAL	M	46,419,752	380,203	381,789	383,381	384,980	386,585	388,197	389,816	391,441	393,074	394,713	396,359
TOTAL	C	91,175,898	91,556,101	91,937,890	92,321,271	92,706,251	93,092,836	93,481,033	93,870,849	94,262,290	94,655,364	95,050,077	95,446,436

		JAN-2015	FEB-2015	MAR-2015	APR-2015	MAY-2015	JUN-2015	JUL-2015	AUG-2015	SEP-2015	OCT-2015	NOV-2015	DEC-2015
TOTAL CONSTRUCTION COST	M	24,163,035	0	0	0	0	0	0	0	0	0	0	0
TOTAL CONSTRUCTION COST	C	112,242,255	112,242,255	112,242,255	112,242,255	112,242,255	112,242,255	112,242,255	112,242,255	112,242,255	112,242,255	112,242,255	112,242,255
INTEREST DURING CONSTRUCTION	M	498,655	500,935	503,024	505,122	507,228	509,343	511,467	513,600	515,742	517,892	0	0
INTEREST DURING CONSTRUCTION	C	7,886,071	8,387,006	8,890,030	9,395,151	9,902,379	10,411,723	10,923,190	11,436,790	11,952,531	12,470,423	12,470,423	12,470,423
TOTAL	M	24,681,890	500,935	503,024	505,122	507,228	509,343	511,467	513,600	515,742	517,892	0	0
TOTAL	C	120,128,326	120,629,261	121,132,285	121,637,407	122,144,635	122,653,978	123,165,445	123,679,045	124,194,786	124,712,679	124,712,679	124,712,679

ESTIMATE NO. : 31251A
PROJECT NO. : 12681-006
ISSUE DATE : 09/01/2011
PREP/REV : AT, FFS/
APPROVED : MON

SARGENT & LUNDY

NPPD GERALD GENTLEMAN STATION
WET FGD - AUX POWER AND BOOSTER FANS
CASH FLOW REPORT

PRICE LEVEL 2011

CASH FLOW BY MONTH

		JAN-2016	FEB-2016	MAR-2016	APR-2016	MAY-2016	JUN-2016	JUL-2016	AUG-2016	SEP-2016	OCT-2016	NOV-2016	DEC-2016
TOTAL CONSTRUCTION COST	M	0	0	0	0	0	0	0	0	0	0	0	0
TOTAL CONSTRUCTION COST	C	112,242,255	112,242,255	112,242,255	112,242,255	112,242,255	112,242,255	112,242,255	112,242,255	112,242,255	112,242,255	112,242,255	112,242,255
INTEREST DURING CONSTRUCTION	M	0	0	0	0	0	0	0	0	0	0	0	0
INTEREST DURING CONSTRUCTION	C	12,470,423	12,470,423	12,470,423	12,470,423	12,470,423	12,470,423	12,470,423	12,470,423	12,470,423	12,470,423	12,470,423	12,470,423
TOTAL	M	0	0	0	0	0	0	0	0	0	0	0	0
TOTAL	C	124,712,679	124,712,679	124,712,679	124,712,679	124,712,679	124,712,679	124,712,679	124,712,679	124,712,679	124,712,679	124,712,679	124,712,679

		JAN-2017	FEB-2017	MAR-2017	APR-2017	MAY-2017	JUN-2017	JUL-2017	AUG-2017	SEP-2017	OCT-2017	NOV-2017	DEC-2017
TOTAL CONSTRUCTION COST	M	0	0	0	0	0	0	0	0	0	0	0	0
TOTAL CONSTRUCTION COST	C	112,242,255	112,242,255	112,242,255	112,242,255	112,242,255	112,242,255	112,242,255	112,242,255	112,242,255	112,242,255	112,242,255	112,242,255
INTEREST DURING CONSTRUCTION	M	0	0	0	0	0	0	0	0	0	0	0	0
INTEREST DURING CONSTRUCTION	C	12,470,423	12,470,423	12,470,423	12,470,423	12,470,423	12,470,423	12,470,423	12,470,423	12,470,423	12,470,423	12,470,423	12,470,423
TOTAL	M	0	0	0	0	0	0	0	0	0	0	0	0
TOTAL	C	124,712,679	124,712,679	124,712,679	124,712,679	124,712,679	124,712,679	124,712,679	124,712,679	124,712,679	124,712,679	124,712,679	124,712,679

		JAN-2018	FEB-2018	MAR-2018	APR-2018	MAY-2018	JUN-2018	JUL-2018	AUG-2018	SEP-2018	OCT-2018	NOV-2018	DEC-2018
TOTAL CONSTRUCTION COST	M	0	0	0	0	0	0	0	0	0	0	0	0
TOTAL CONSTRUCTION COST	C	112,242,255	112,242,255	112,242,255	112,242,255	112,242,255	112,242,255	112,242,255	112,242,255	112,242,255	112,242,255	112,242,255	112,242,255
INTEREST DURING CONSTRUCTION	M	0	0	0	0	0	0	0	0	0	0	0	0
INTEREST DURING CONSTRUCTION	C	12,470,423	12,470,423	12,470,423	12,470,423	12,470,423	12,470,423	12,470,423	12,470,423	12,470,423	12,470,423	12,470,423	12,470,423
TOTAL	M	0	0	0	0	0	0	0	0	0	0	0	0
TOTAL	C	124,712,679	124,712,679	124,712,679	124,712,679	124,712,679	124,712,679	124,712,679	124,712,679	124,712,679	124,712,679	124,712,679	124,712,679

		JAN-2019	FEB-2019	MAR-2019	APR-2019	MAY-2019	JUN-2019	JUL-2019	AUG-2019	SEP-2019	OCT-2019	NOV-2019	DEC-2019
TOTAL CONSTRUCTION COST	M	0	0	0	0	0	0	0	0	0	0	0	0
TOTAL CONSTRUCTION COST	C	112,242,255	112,242,255	112,242,255	112,242,255	112,242,255	112,242,255	112,242,255	112,242,255	112,242,255	112,242,255	112,242,255	112,242,255
INTEREST DURING CONSTRUCTION	M	0	0	0	0	0	0	0	0	0	0	0	0
INTEREST DURING CONSTRUCTION	C	12,470,423	12,470,423	12,470,423	12,470,423	12,470,423	12,470,423	12,470,423	12,470,423	12,470,423	12,470,423	12,470,423	12,470,423
TOTAL	M	0	0	0	0	0	0	0	0	0	0	0	0
TOTAL	C	124,712,679	124,712,679	124,712,679	124,712,679	124,712,679	124,712,679	124,712,679	124,712,679	124,712,679	124,712,679	124,712,679	124,712,679

		JAN-2020	FEB-2020	MAR-2020	APR-2020	MAY-2020	JUN-2020	JUL-2020	AUG-2020	SEP-2020	OCT-2020	NOV-2020	DEC-2020
TOTAL CONSTRUCTION COST	M	0	0	0	0	0	0	0	0	0	0	0	0
TOTAL CONSTRUCTION COST	C	112,242,255	112,242,255	112,242,255	112,242,255	112,242,255	112,242,255	112,242,255	112,242,255	112,242,255	112,242,255	112,242,255	112,242,255
INTEREST DURING CONSTRUCTION	M	0	0	0	0	0	0	0	0	0	0	0	0
INTEREST DURING CONSTRUCTION	C	12,470,423	12,470,423	12,470,423	12,470,423	12,470,423	12,470,423	12,470,423	12,470,423	12,470,423	12,470,423	12,470,423	12,470,423
TOTAL	M	0	0	0	0	0	0	0	0	0	0	0	0
TOTAL	C	124,712,679	124,712,679	124,712,679	124,712,679	124,712,679	124,712,679	124,712,679	124,712,679	124,712,679	124,712,679	124,712,679	124,712,679

ESTIMATE NO. : 31251A
PROJECT NO. : 12681-006
ISSUE DATE : 09/01/2011
PREP/REV : AT, FFS/
APPROVED : MON

SARGENT & LUNDY

NPPD GERALD GENTLEMAN STATION
WET FGD - AUX POWER AND BOOSTER FANS
CASH FLOW REPORT

PRICE LEVEL 2011

CASH FLOW BY YEAR

		2011	2012	2013	2014	2015	2016	2017	2018	2019	2020
TOTAL CONSTRUCTION COST	A	0	10,897,570	31,120,523	46,041,127	24,183,035	0	0	0	0	0
TOTAL CONSTRUCTION COST	C	0	10,897,570	42,018,093	88,059,220	112,242,255	112,242,255	112,242,255	112,242,255	112,242,255	112,242,255
INTEREST DURING CONSTRUCTION	A	0	557,997	2,180,056	4,649,163	5,083,208	0	0	0	0	0
INTEREST DURING CONSTRUCTION	C	0	557,997	2,738,053	7,387,216	12,470,423	12,470,423	12,470,423	12,470,423	12,470,423	12,470,423
TOTAL	A	0	11,455,566	33,300,579	50,690,290	29,266,243	0	0	0	0	0
TOTAL	C	0	11,455,566	44,756,146	95,446,436	124,712,679	124,712,679	124,712,679	124,712,679	124,712,679	124,712,679

H:\INFOD\V\PROJECTS\Nebraska Public Power District\Gerald Gentlemen - Wet FGD\[31251A - Gerald Gentleman Station AUX Power and Fans.xls]Summary Report

Vendor Budgetary Quotes

Fw: Proposal #502097 - Gerald Gentleman Units 1 & 2 WFGD

WAYSHALEE A PATEL to: CHRISTOPHER D HORNISH 08/03/2011 02:31 PM
Cc: STEVEN R PASIMENI, PAUL HOORNAERT, DAVID G SLOAT

Chris-

Pricing from Babcock Power on the FGD. Again, same scope as B&W, however the cost is a bit higher. We are basing the estimate on the use of the tile absorber, not the flake glass.

Please let me know if you have any questions.

Wayshalee A. Patel
Fossil Power Technologies
Sargent & Lundy, LLC
55 E. Monroe
Chicago, IL 60603-5780
P: (312) 269-6619
F: (312) 269-2499
wayshalee.a.patel@sargentlundy.com

----- Forwarded by WAYSHALEE A PATEL/Sargentlundy on 08/03/2011 02:30 PM -----

{In Archive} Fw: Proposal #502097 - Gerald Gentleman Units 1 & 2 WFGD

JWaller to: WAYSHALEE A PATEL 08/02/2011 03:37 PM

Cc: "Mario"

Archive:

```
    ----- Original Message -----
    From: Karen Frank
    Sent: 08/02/2011 02:15 PM EDT
    To: Jack Waller
    Cc: Barry Basile
    Subject: Proposal #502097 - Gerald Gentleman Units 1 & 2 WFGD
Jack,

Per S & L's request for the absorber shell erection only - excluding
erection of all internals etc., the total revised pricing for 2 units is:

   Stebbins tile-lined concrete absorber vessel:  $115,700,000

   Carbon steel flake glass lined absorber vessel:  $109,800,000  (includes
   erection of vessel shell only with flake glass lining applied)

Please advise if you need any additional information.
```

Regards,

Karen

(Embedded image moved to file: pic08616.gif)

Karen Frank
Manager - Proposal Estimating
Babcock Power Environmental Inc.
5 Neponset Street
Worcester, MA 01606

T: 508-854-3667 F: 508-854-3800
M: 508-340-9678

kfrank@babcockpower.com
http://www.babcockpower.com

********** Think Before You Print **********
This e-mail and any attachments are intended only for the named recipient(s) and may contain information that is legally privileged, confidential and/or exempt from disclosure under applicable law. If you have received this message in error and are not the intended recipient(s), you may not retain, copy or use this e-mail or any attachment for any purpose or disclose all or any part of the contents to any other person or entity. Any such dissemination, distribution or copying of this e-mail or its attachments is strictly prohibited. If you are not the intended recipient(s), please immediately notify the sender and permanently delete this e-mail and any attachments from your computer.
http://www.babcockpower.com
****

pic08616.gif

Fw: NPPD, Gerald Gentleman 1 & 2 , Wet FGD Budget Price

WAYSHALEE A PATEL to: CHRISTOPHER D HORNISH 08/03/2011 02:30 PM
Cc: STEVEN R PASIMENI, DAVID G SLOAT, PAUL HOORNAERT

Chris-

Here is the updated pricing from B&W. Please let me know if you have any questions.

Note, that the scope didn't change just the material used for the internals to the absorber. Also note that installation of the concrete shell and tile is included in the proposal, however installation of the absorber internals (trays, sprays, headers, etc) is not included.

Wayshalee A. Patel
Fossil Power Technologies
Sargent & Lundy, LLC
55 E. Monroe
Chicago, IL 60603-5780
P: (312) 269-6619
F: (312) 269-2499
wayshalee.a.patel@sargentlundy.com

----- Forwarded by WAYSHALEE A PATEL/Sargentlundy on 08/03/2011 02:28 PM -----

{In Archive} NPPD, Gerald Gentleman 1 & 2 , Wet FGD Budget Price

Telesz, Robert W to: wayshalee.a.patel, walter.j.rymarczyk 08/01/2011 01:54 PM

Cc: "Johnson, Brandy", "Nischt, Walter", "Huryn, John B", "Hickerson, John S", "Biehl, Greg W", "Smith, Jeffrey M"

Archive:

Dear Wayshalee and Walter,

Reference previous budget price dated July 27, 2011 attached.

Per your request B&W has upgraded all the Al6XN components of the proposed absorbers for Gerald Gentleman Units 1 & 2 from Al6XN to C-276 material. The changes affect the absorber tray, supports (

tray, headers, mist eliminators, and mist eliminator wash headers), wall connections, and absorber outlet hood (including turning vanes). The budget price increase is $14.6 million for these changes for two absorbers. The revised total budgetary price is $105.6 million. Please refer to the July 27,2011 budgetary proposal for the complete scope.

We also wish to advise that, since the execution schedule is unknown to us at this time, no provisions have been made for winter shelter, heating equipment, or fuel for the heating equipment in conjunction with construction of the Stebbins absorber.

If we can be of further service, please advise.

Bob Telesz
Sr. Environmental Consultant
The Babcock & Wilcox Co.
Ph 330-860-2381

This message is intended only for the individual or entity to which it is addressed and contains information that is proprietary to The Babcock & Wilcox Company and/or its affiliates, or may be otherwise confidential. If the reader of this message is not the intended recipient, or the employee agent responsible for delivering the message to the intended recipient, you are hereby notified that any dissemination, distribution or copying of this communication is strictly prohibited. If you have received this communication in error, please notify the sender immediately by return e-mail and delete this message from your computer. Thank you. W Patel ltr 072711.doc

babcock & wilcox power generation group
» 20 south van buren avenue » p.o. box 351 » barberton, oh 44203-0351 usa
» phone 330.753.4511 » fax 330.860.1886 » www.babcock.com

July 27, 2011

Ms. Wayshalee Patel
Wayshalee.a.patel@sargentlundy.com
Sargent & Lundy
Nebraska Public Power District – Gerald Gentleman, Units 1 & 2

Dear Ms. Patel,

The Babcock and Wilcox Power Generation Group (B&W PGG) is pleased to provide the following pricing analysis per Mr. Rymarczyk's request dated July 14, 2011.

SCOPE OF SUPPLY

The following is a summary of the major scope included in the WFGD budget cost estimate:

- Absorber towers, including inlet nozzle (2 modules)
- Tower internals, including spray headers, tray, agitators, mist eliminators
- Absorber recirculation (AR) pumps
- Oxidation air blowers
- Common reagent preparation system (ball mills and associated equipment)
- Dewatering Hydroclones for solids recovery
- Common secondary dewatering system (vacuum belt filters and associated equipment)
- Chloride purge equipment
- Miscellaneous pumps, tanks, agitators, etc.
- AR piping
- Piping and valves internal to common reagent prep/dewatering building
- Local instrumentation and controls
- B&W design engineering and arrangement drawings
- Installation of Stebbins vertical shell by Stebbins, not including hood and absorber internals

The following is a summary of the major scope not included in the WFGD budget cost estimate and are assumed to be provided by the Owner:

- Foundations, elevated slabs, civil work and chemical clean
- Site preparation, development and maintenance (parking lots, laydown areas, roads), security
- Architectural (building siding, roofing, doors, louvers, HVAC, enclosure panels, etc.)
- All electrical equipment (other than supplied equipment motors) and wiring/cabling
- Electrical/Temporary electrical
- Service water and instrument air piping external to buildings and enclosures, plant air system
- Plumbing or potable water systems
- Acoustical enclosures or insulation
- All Hydro static testing (other than code required) as well as supply and disposal of hydro water
- Structural steel for the reagent preparation building
- Flues
- Structural steel
- Heat tracing
- Elevators
- CEMS
- Controls (including DCS, wiring, and cabinets)

- Water treatment (if required)
- Masonry walls or building
- Model study
- NDE (other than code required)
- Fans (ID or booster)
- Painting
- Stack
- Existing plant design review and/or verification
- Testing and calibration of devices
- Performance testing
- Start-up and commissioning of equipment
- Pipe labeling
- Warehouse space for storage of major equipment and materials that require indoor storage
- Long term storage and maintenance
- Construction (except for Stebbins vertical shell)

B&W has designed the equipment for 30,000 ppm chlorides per your request. The absorber tower (one per unit) vertical walls are Stebbins reinforced concrete with SEMPLATE lining, and includes installation of that portion of the scope by Stebbins. The absorber outlet hood, as well as some of the absorber internals (tray, tray and header supports, and support wall connections) are estimated based on AL6XN material. The headers are FRP material, and the mist eliminators are based on polypropylene. Installation of the hood and internals is not currently included, per your request.

The current budgetary, engineering and material price for the above scope for Gerald Gentlemen Station, Units 1 & 2 on a delivered basis is $91,000,000.

We are in receipt of your additional request dated July 26, 2011 for an option for a flakeglass lined absorber. We can respond to this request by August 2, 2011. We trust this meets your needs, but if not, please let us know.

Thank you for considering Babcock and Wilcox for this important environmental project.

Yours truly,

BABCOCK & WILCOX POWER GENERATION GROUP, INC.

Bob Telesz
Senior Environmental Consultant
330-860-2381

BT/tlc

cc: Walter Rymarczyk
Brandy Johnson
John Hickerson
John Huryn
Greg Biehl
Ted Budner

ADVATECH™

A company of URS and Mitsubishi Heavy Industries America

August 5, 2011

Mr. Walter Rymarczyk
Sargent & Lundy LLC
55 East Monroe Street
Chicago, IL 60603

Subject: Advatech Response to a Budgetary Price Request for the Study of Wet FGD, Project No. 12681-006

Dear Mr. Rymarczyk,

Advatech is pleased to submit the following pricing information to assist Sargent & Lundy (S&L) in developing a total installed cost (TIC) estimate for wet flue gas desulfurization (WFGD) systems capable of achieving a guaranteed SO_2 removal rate of 98%. The budgetary estimate provided is for engineering and procurement associated with the specified equipment vendor's scope of supply. The only exception is the Stebbins absorber vessel, which is priced as furnish and erect.

Advatech's Double Contact Flow Scrubber (DCFS) is a highly reliable and efficient WFGD technology that has been implemented on approximately 75 GW worldwide and over 16 GW in the United States alone. The technology has proven capable of continuously removing greater than 98% of the boiler-generated SO_2 without the use of performance additives, even when fluctuations in SO_2 loading occur as a result of variations in fuel composition. It is designed to operate at essentially 100% availability without the need for a spare module.

We sincerely hope that this analysis provides you with the necessary information that you require for your assessment. Please do not hesitate to call if any additional information is needed. We look forward to having the opportunity to work with you on this important project.

Regards,

George Sacco
VP Business Development
Advatech
770-335-3559 [mobile]
678-808-8841 [office]

Conceptual Design Overview

For this application, where the design is based on burning a Powder River Basin (PRB) fuel, Advatech is proposing the use of our Single Tower Double Contact Flow Scrubber (DCFS) design. The proposed Absorber design is a concrete Stebbins semplate-lined vessel. **Exhibit 1-1** provides a graphical representation of the Single Tower DCFS.

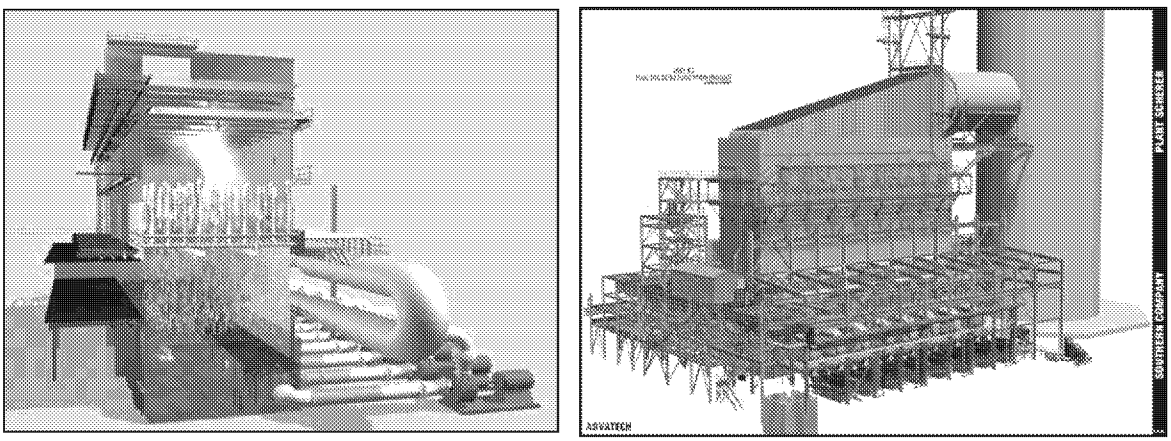

Exhibit 1-1 Single Tower DCFS

The proposed Single Tower DCFS is designed with two, close-coupled stages of nozzles located approximately mid-way up the absorber vessel. These two stages are supplied by a single, external spray header, and are designed to spray upwards (co-current with the flue gas flow) in a fountain-like manner, forming a fluidized bed. Flue gas is introduced to the DCFS from the side of the vessel, just below the spray header elevation. The gas comes into intimate contact with the slurry both as it rains down into the integrated reaction tank, as well as where it is sprayed upwards, traveling co-current with the gas flow (hence the term "double contact"). This double contact provides for efficient absorption of SO_2, excellent utilization of the limestone reagent, and a very high level of removal of incoming fly ash.

Recycle Spray Header Design

The Single Tower DCFS is equipped with a single-level, FRP spray header that supplies the internal FRP spray pipes. Since only a single external spray header is required for this design, the spare recycle pump is simply tied into the header rather than having to be designed to supply its own header like with the competing open spray tower technologies.

Low-pressure silicon carbide nozzles are used to generate a fountain-like spray reaching approximately 30 feet in height under full-load operation. The proprietary MHI nozzle has no internals and a large free passage, so the potential for plugging is negligible. They also are designed for very low pressure drop, which decreases wear and tear of the nozzles, allowing for them to be constructed from silicone carbide.

The recycle slurry shoots upward from the spray nozzle much like a liquid rod that gradually disintegrates into very large spray droplets as the slurry decelerates due to

gravity. The larger droplets (as compared to those generated by nozzles employed in open spray tower designs) minimize the slurry loading on the mist eliminators, dramatically reducing the potential for carryover.

Reaction Tank Agitation and Oxidation

Adequate oxidation is critical to scale-free operation. The Single Tower DCFS has the added advantage of employing Jet Air Spargers (JAS) to both oxidize and agitate the slurry. The JAS represents another of MHI's proprietary designs that is unique to the DCFS, and makes use of the existing recycle pump capacity and an eductor to induce air into the recycled slurry to produce gypsum. The JAS produces very fine air bubbles, which result in efficient mass transfer and require the use of significantly less oxidation air than required by side-entry agitators or a fixed-grid sparger system. The JAS saves on capital cost by reducing or eliminating the need for oxidation air blowers, reducing agitator requirements, and eliminating the need for expensive, fixed-grid sparger piping.

At elevated SO_2 loading (> approximately 1.2 lb/MMBtu), low-pressure blowers are required to "enhance" the induced air so that the O to SO_2 ratio required for oxidation can be obtained. Hence, for the design fuel specified herein, the Advatech offering includes oxidation air blowers.

Reagent Preparation

Our budgetary price includes the equipment required to store the as-received, unground limestone; grind it to 90% pass 325 mesh, slurry and store the ground limestone at 30 wt% solids, and convey the slurry to the absorber vessels. Two ball mills are included in the estimate, each sized for the capacity required for both units. All required support steel, instrumentation, and interconnecting piping are included, with the exception of the piping connecting the limestone feed pumps to the absorber vessels. Also excluded is the conveyor system required to transfer the limestone from the unloading area to the day silos.

Dewatering

The DCFS is unique in that it is designed to operate at 30 wt% solids. As a result, the slurry can be sent directly to the belt filters for dewatering, without first having to go through a thickener or hydrocyclones. For the dewatering island we have provided 100% redundancy by including 2x100 horizontal belt filters. The interconnecting piping and solids handling equipment from belt filter discharge to stackout are included, as is the associated structural steel and platform requirements.

Design Basis

Our budgetary price is based on the design information presented in **Exhibit 1-2**, below.

Exhibit 1-2. Process Design Data

	Unit 1	Unit 2
Gross Power, MW	705	745
Total Heat Input, MM Btu/hr	7,538	7,538
SO_2, lb/MMBtu	2.2	2.2
SO_2 Removal, %	98	98
FGD Inlet Temperature, °F	364	353
FGD Inlet Pressure, PSIA	15.0	15.0
FGD Inlet Flow Rate, acfm	3,337,411	3,503,814
FGD Inlet SO_2 Flow Rate, lb/hr	16,911	16,911
FGD Inlet Particulate Loading[1], lb/MMBtu	0.03	0.03
FGD Inlet NOx Concentration, lb/MMBtu	0.05	0.05
FGD Inlet HF Concentration, ppm	0	0
Limestone Purity, % C_aCO_3 by weight dry	93.5	93.5
Limestone Utilization, %	91	91
Delivered Limestone Bulk Density, lb/ft^3		
For sizing	98	98
For structural load	85	85
Delivered Limestone Bond Work Index, kW/short-ton	12	12
Ground Limestone Size, % minus 325 mesh	90	90
Limestone Reactivity, m^3/kg-mol/h 100,000		100,000
Gypsum Purity, %	90	90
Gypsum Moisture Content, %	<15	<15
Design Coal Composition		
Moisture, wt%	27.1	
Carbon, wt%	51.46	
Hydrogen, wt%	3.14	
Nitrogen, wt%	0.73	
Sulfur, wt%	1.00	
Chlorine, wt%	0.01	
Oxygen, wt%	10.50	
Ash, wt%	5.80	
HHV, Btu/lb	8,900	

[1] Particulate Size Distribution is assumed 50D=3 micrometer

AQCS System Configuration and Description

Equipment capacities, sizes and counts specific to Advatech's budgetary estimate are included in the equipment list, and process flow diagram (PFD) and material balance that are attached as Appendices A and B, respectively. The process data requested for the proposed FGD system are included in **Exhibit 1-3**, below.

Exhibit 1-3. Preliminary Technical Process Data

Technical & Process Data	Unit 1	Unit 2	Total
L/G Ratio, gpm/kacfm	146	138	NA
Total Make-up Water [1], gpm	Max. 2500 / Avg. 1250	Max. 2500 / Avg. 1250	Max.5000 / Avg. 2500
Vendor Scope Pressure Drop [2], IWCG	6.3	6.5	NA
Max. Equilibrium Cl^- for Stebbins Tile, ppmw	20,000	20,000	NA
Additional Cl^- Blowdown Rate [3], gpm	0	0	0
Limestone Use, dry tons/hr	30		30
Gypsum Production [4], wet tons/hr	54		54

[1] Includes all sources of fresh water.
[2] Pressure drop includes inlet transition duct, absorber, mist eliminator and outlet hood.
[3] All water is purged with the gypsum solids.
[4] Gypsum moisture content of 10 wt%

Advatech Estimated Pricing

The following Estimated Pricing is based on Current Day Pricing.

TOTAL UINSTALLED EQUIPMENT COST [1]	
- Reagent Preparation	$12,446,862
- Absorber Area	$96,358,567
- By-Product Dewatering	$ 3,998,688
TOTAL FGD COST	**$112,804,117**

[1] Uninstalled cost with the exception of the Stebbins vessel, which is furnish and erect.

Technical Clarifications and Assumptions

1. The estimated costs presented are based on present day services, material, and equipment pricing. No allowance has been included for escalation. These costs would need to be adjusted to account for this escalation at the time of execution.

2. The scope of supply for this estimate includes Engineering, Design, and Procurement of Engineered materials and equipment in accordance with Advatech's standard specifications

3. Advatech Existing Designs – Based on the flue gas data provided, Advatech was able to use existing designs for the absorber islands, reagent preparation, and dewatering system. Changes to the as-designed components will have an impact on Advatech's price.

    a. Absorber Island vs. S&L Budget Proposal – Advatech is further clarifying the project where the design is complete against the scope of work indicated in the S&L DOR and technical data. The absorber island would be identical to the completed project except for the following in this estimate:

        i. Large diameter butterfly valves were used in lieu of knife gate valves.

        ii. Coated carbon steel was used in lieu of galvanized steel

        iii. No recycle pump enclosures have been provided

        iv. No outlet ductwork, ductwork support, or performance testing access has been provided

        v. No monorail, hoists, or jib cranes have been provided

        vi. No absorber sump, sump pump, or mixers have been provided

    b. Ball Mill System – The completed conceptual design has been modified to the S&L defined scope of supply. The ball mills were slightly larger than would be required for this project.

    c. Dewatering System – The completed conceptual design scope has been modified to the S&L defined scope of supply. The dewatering system is identical to what would be required for this project.

4. The equipment sizes and the estimate are based on the process design basis and scope of work defined herein. The process was sized based on the flue gas volumetric flow rate and the SO_2 mass flow rate provided by S&L. Any design basis information that was contradictory to this was not used

5. After the process design was completed, it was discovered that the plant is located at a significant elevation. Advatech has not included costs to account for any implications due to plant elevation.

6. Equipment costs are based on the capacities, quantities, and system redundancies as defined in the Equipment List included as Appendix A.

7. Structural steel and access scope of supply – Advatech clarifies the scope of supply by area as follows:

    a. Absorber Island – Advatech has included support steel for the absorber inlet ductwork transition and recycle piping. Support steel, handrail, and grating have been provided for standard access to the absorber.

    b. Reagent Preparation – Advatech has included support steel and access for the day bins and ball mill system. Only building steel has been excluded.

    c. Dewatering System - Advatech has included support steel and access for the dewatering system. Only building steel has been excluded.

8. Piping, pipe supports, valves, and instrument scope of supply – Advatech as included piping, pipe support, valves, and instruments to the building boundary as required by the specification. The piping is prefabricated and all other items will be shipped loose.

9. Existing 3D models and design – Advatech has a completed 3D model and design for the absorber island.

10. Project reporting by Advatech with updates on cost, schedule, and progress will be performed periodically at agreed upon milestones.

11. The Owner will provide geotechnical and survey information for use in the civil/structural engineering on the project.

12. A two-coat painting system has been included for all carbon steel material supplied by Advatech. Touchup painting for equipment and material following installation has not been included.

13. Advatech assumes the plant has sufficient capacity for utility water and air supplies to accommodate the consumption needed for this new equipment. Modifications and/or additional equipment to enhance the existing systems are not included in the estimate.

14. Permanent or temporary lifting devices (jib cranes, monorails, hoists) are not included in the cost estimate.

15. It is assumed all permits will be secured by Owner.

16. Ductwork expansion joints have been included at the absorber inlet transition and at the absorber outlet ductwork interface.

17. Advatech has not included cost for a filter feed tank, however, we recommended that one be included for the benefit of belt filter flow control, and also absorber emergency drainaige.

18. No start-up or operations spare parts have been included.

19. Costs have been included for periodic site technical assistance during construction and start-up, and performance testing.

20. It is assumed the Owner will perform commissioning and startup activities and provide labor to verify completed mechanical/electrical/controls work and to operate the new equipment.

21. Fire protection is not included.

22. Heat tracing and insulation for exterior piping has not been included.

23. Ductwork insulation is not included for the absorber inlet transition.

24. Limestone reactivity has the maximum influence on the desulfurization performance. However, since reactivity is currently unknown, the process was sized based on an assumed limestone reactivity of 100,000m^3/kmol/h. After contract award, the actual limestone and fly ash used in the plant shall be provided by the Owner for analysis by Advatech. Any resulting design changes due to reactivity are not included in this estimate.

25. Advatech has had past experience with makeup water containing an oxidation inhibitor. This will adversely affect oxidation performance. After Contract award, the actual makeup water used in the plant shall be provided by the Owner for analysis by Advatech. Based upon the results, Advatech could potentially request a new makeup water sources or a change in oxidation equipment design.

26. The absorber reaction tank is sized based on solid retention time. Because the inlet SO2 loadimg is low, the calculated liquid retention time is 1.3 minutes, but the solids retention time is 33 hours. This is adequate for avoilding a negative impact on gypsum quality.

27. Acid resistance block lining is included for the wet/dry interface.

28. Advatech design requires an O/SO2 ratio of only 1.8:1. This is consistent with Advatech's experience with the use of the Jet Air Sparger(JAS) system.

29. No hydrocyclones are included for primary dewatering. The Advatech design allows for operation at 30 wt% in the reaction tank and, as a result, absorber blowdown can be supplied directly to the vacuum belt filter system without the need for pre-thickening

30. Product gypsum is disposal grade (10 wt% moisture without cake washing); however,the moisture content could be as high as 15 wt% moisture due to lower limestone purity.

Appendix A. Equipment List

Proprietary and Confidential

Issue for Budgetary Estimate

REV	Project	APP'D	CHE'D	DWN	DATE	DESCRIPTION	REF. NO.
B		for N.I	N.I	J. H	7/25/2011	Gypsum Feed Tank system/Reclaim water sump system are deleted.	
		Section					

Si Section	gnature	Project	Date	
Approved by	S.Sugita		07/22/11	**Sargent & Lundy**
Checked by	M.Ito		07/22/11	
Drawn by	J.Hashimoto		07/22/11	EDP

Wet Flue Gas Desulfurization Project

Description

Equipment List

ADVATECH™

Partner DWG Number	Revision
B242-00100	B

PE	
Process	1
Mech.	1
Piping	1
Civil/Str.	1
I&C	1
Schedule	
DD	
PM	
PE	

Major Equipment List

Absorption System (200)

Number	Service	Number	Specification
(1/2-T-200)	Absorber	1 x 2	Type : Double Contact Flow Scrubber (DCFS) Single Tower Dimensions Tank : 32'-2 1/2"L x 125'-9"W Tower : 32'-2 1/2"L x 125'-9"W Material of Construction : W/D Zone : Finalized by Stebbins Tower and Reaction Tank : Finalized by Stebbins Spray Pipes : FRP (with Super AR Liner) DCFS Nozzle : SiC
(1/2-M-210A/R)	Jet Air Sparger	18 x 2	Material : External FRP holder with Ceramic Liner
(1/2-P-210A/H)	Absorber Recycle Pump	(7+1) x 2 16	Type : Centrifugal Pump Capacity : 70,600 GPM Head : 64.0 ftH Motor : 2,000 HP *(Finalized by vendor)* Material Impeller : Special Alloy (Finalized by supplier) Casing : C.S. with Rubber Lining Shaft : Carbon Steel Accessory Cooling Air Fan (Finalized by supplier)
(1/2-B-210A/B)	Oxidation Air Blower	(1+1) x 2 4	Type : Turbo Flow : 7,300 SCFM(w) (at 68F, 14.7psia) Head : 10.6 PSI (Finalized by supplier) Motor: 700 HP (Finalized by vendor) Material Impeller : Stainless Steel (Finalized by supplier) Casing : Carbon Steel (Finalized by supplier) Shaft : Carbon Steel Accessory Intake filters, Intake silencer, Blow off silencer, Lubrication oil unit , Cooling air fan
(1/2-A-200A/F)	Absorber Tank Agitator	6 x 2 12	Type : Marine Propeller (Finalized by supplier) Motor : 40 HP *(Finalized by vendor)* Material Shaft : 6 % Mo Impeller : 6 % Mo
(1/2-E-210)	Absorber Mist Eliminator	1 x 2 (2 stage)	Type : Chevron (Vertical Flow) - 2 stages Size : 32'-2 1/2"W x 125'-9"L Material Element : FRP Washing Pipe : FRP Washing Nozzle : PVDF
(1/2-P-220A/B)	Absorber Bleed Pump	(1+1) x 2 4	Type : Centrifugal Pump Capacity : 310 GPM Head : 110 ftH Motor : 25 HP *(Finalized by vendor)* Material Impeller : Special Alloy Casing : C.S. with Rubber Lining Shaft : Carbon Steel

Major Equipment List

Gypsum Dewatering Handling System (400)

Number	Service	Number	Specification
(M-430A/B)	Gypsum Belt Filter (Finalized by Vendor Info.)	1+1 2	Type : Vacuum Belt Filter Capacity : 54.2 ston/h-w (Wet Cake) Filtration Area : 640 ft2/unit (Finalized by Vendor) Motor : 40 HP (Finalized by vendor) Material Frame : Carbon Steel Belt : Rubber
(V-430A/B)	Belt Filter Filtrate Receiver (Finalized by Vendor Info.)	1+1	Type : Cylindrical Size : TBD ft dia. x TBD ft H Material : FRP Total Volume : TBD gal
(P-430A/B)	Vacuum Pump (Finalized by Vendor Info.)	1+1 2	Type : Water Ring Capacity : 10,500 acfm (Finalized by vendor) Head : 10 in.Hg(A) (Finalized by vendor) Motor : 700 HP (Finalized by vendor) Material Impeller : Carbon Steel Casing : Carbon Steel Shaft : Carbon Steel
(P-431A/B)	Belt Filter Filtrate Receiver Pump (Finalized by Vendor Info.)	1+1 2	Type : Centrifugal Capacity : TBD GPM Head : TBD ftH Motor : TBD HP (Finalized by vendor) Material Impeller : Special Alloy Casing : C.S. with Rubber Lining Shaft : Carbon Steel

Major Equipment List

Gypsum Dewatering Handling System (400)

Number	Service	Number	Specification
(V-440A/B)	Cloth Wash Tank (Finalized by Vendor Info.)	1+1	Type : Cylindrical Size : 9 ft dia. x 9 ft H Material : Carbon Steel Effective Volume : 950 gal (5 mins) Total Volume : 4,280 gal
(P-440A/B)	Cloth Wash Pump (Finalized by Vendor Info.)	1+1 2	Type : Centrifugal Capacity : 190 GPM Head : 180 ftH Motor : 25 HP (Finalized by vendor) Material Impeller : Carbon Steel Casing : Carbon Steel Shaft : Carbon Steel
(C-470)	Gypsum Collecting Conveyor (Finalized by Vendor Info.)	1 1	Type : Belt Conveyor Capacity : 54.2 ston/h Motor : TBD HP (Finalized by vendor)

Major Equipment List

Limestone Receive, Storage,Transfer and Grinding System (500)

Number	Service	Number	Specification
(V-530A/B)	Limestone Storage Bin (Finalized by Vendor Info.)	1+1	Type : Cylindrical Silo Capacity : 760 ston available (24 hours) Size : 23 ft dia. x 34 ft H (Cylindrical Section) 16 ft H (60 deg. Cone Section) Volume : 16,900 ft3 Material Carbon steel shell, 304SS liners on conical bottom Accessory Vent Dust Collector Mass Flow Silo (Note) Limestone Bulk Density : 98 lb/ft3 for sizing 85 lb/ft3 for structural load
(C-530A/B)	Limestone Weigh Feeder (Finalized by Vendor Info.)	1+1 2	Type : Belt Conveyor Capacity : 32 ston/h(w) Motor : TBD HP
(G-540A/B)	Limestone Ball Mill (Finalized by Vendor Info.)	1+1 2	Type : Horiziontal Ball Mill Media : Limestone Feed Size : 3/4" x 0" Product : 325 mesh, 90 %pass Capacity : 30 ston/h(d) Motor : 1,250 HP (Finalized by vendor) Accessory Inching Drive : 1+0 per mill Lub. Oil Unit : 1+0 per mill Gear Spray : 1+0 per mill Distribution Box : 1+0 per mill
(V-560A/B)	Mill Product Tank (Finalized by Vendor Info.)	1+1	Type : Cylindrical Tank Size : TBD ft dia. x TBD ft. H Material : C.S. with Rubber Lining
(A-560A/B)	Mill Product Tank Agitator (Finalized by Vendor Info.)	1+1 2	Type : Paddle Mixer or Eq. Motor : TBD HP *(Finalized by vendor)* Material : Rubber Coated Carbon Steel
(P-560A/B)	Mill Product Pump (Finalized by Vendor Info.)	1+1 2	Type : Centrifugal Pump Capacity : TBD GPM Head : TBD ftH Motor : TBD HP *(Finalized by vendor)* Material Impeller : Special Alloy Casing : Special Alloy Shaft : Carbon Steel
(M-550A/B)	Ball Mill Hydrocyclone (Finalized by Vendor Info.)	1+1	Type : Vertical Hydrocyclone Capacity : TBD GPM Product Slurry : 325 mesh 90% pass, 30 wt% Material : TBD

Major Equipment List

Limestone Receive, Storage,Transfer and Grinding System (500)

Number	Service	Number	Specification
(V-570)	Limestone Slurry Storage Tank	1	Type : Cylindrical Tank Size : 53 ft dia. x 48 ft H Material : C.S. with Resin Lining Effective Volume : 461,890 gal (24 hours) Total Volume : 791,810 gal
(A-570)	Limestone Slurry Storage Tank Agitator	1 1	Type : Paddle Mixer or Eq. Motor : 200 HP *(Finalized by vendor)* Material : Rubber Coated Carbon Steel
(P-570A/B)	Limestone Slurry Feed Pump	1+1 2	Type : Centrifugal Pump Capacity : 640 GPM Head : 90 ftH Motor : 40 HP *(Finalized by vendor)* Material Impeller : Special Alloy Casing : C.S. with Rubber Lining Shaft : Carbon Steel

Major Equipment List

Utility System (800)

Number	Service	Number	Specification
(P-800A/B)	Mist Eliminator Wash Pump	1+1	Type : Centrifugal Pump Capacity : 1,600 GPM Head : 260 ftH Motor : 200 HP *(Finalized by vendor)*
		2	
			Material Impeller : Carbon Steel Casing : Carbon Steel Shaft : Carbon Steel

Appendix B. Process Flow Diagram and Material Balance

Proprietary and Confidential

Issue for Budgetary Estimate

REV	Project	APP'D	CHE'D	DWN	DATE	DESCRIPTION	REF. NO.
B		for N.I	N.I	J. H	7/25/2011	Gypsum Feed Tank system/Reclaim water sump system are changed to "by others".	

Section	Signature	Project	Date
Approved by	S.Sugita		07/22/11
Checked by	M.Ito		07/22/11
Drawn by	J.Hashimoto		07/22/11

Sargent & Lundy

EDP

Wet Flue Gas Desulfurization Project

Description

Process Flow Diagram

ADVATECH™

Partner DWG Number	Revision
B231-00100	B

PE	
Process	1
Mech.	1
Piping	1
Civil/Str.	1
I&C	1
Schedule	
DD	
PM	
PE	

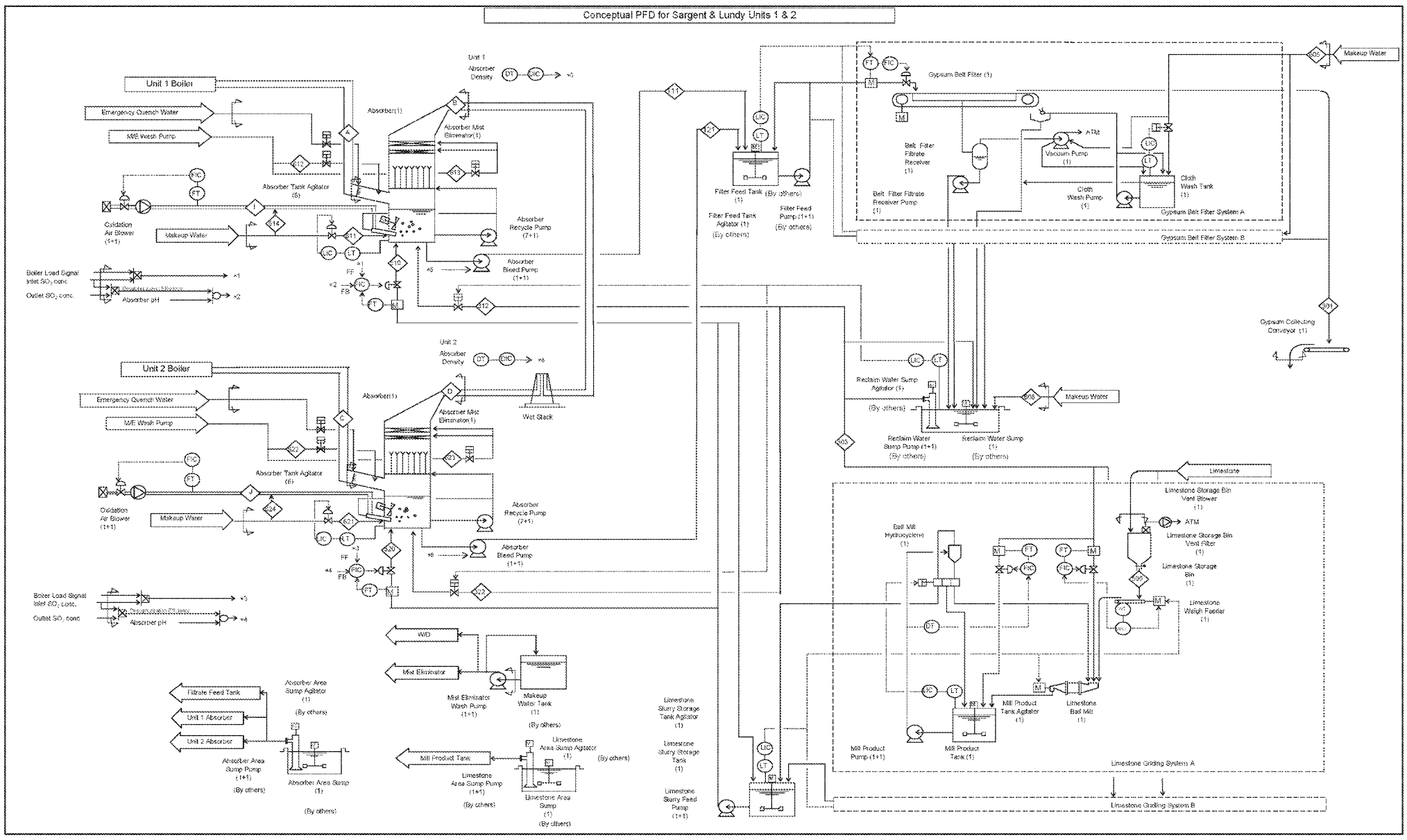
Conceptual PFD for Sargent & Lundy Units 1 & 2
Unit 1 Boiler
Emergency Quench Water
M/E Wash Pump
Absorber(1)
Absorber Mist Eliminator(1)
Absorber Tank Agitator (6)
Oxidation Air Blower (1+1)
Makeup Water
Absorber Recycle Pump (7+1)
Absorber Bleed Pump (1+1)
Boiler Load Signal
Inlet SO2 conc.
Outlet SO2 conc.
Absorber pH
Unit 1 Absorber Density
Unit 2 Boiler
Unit 2 Absorber Density
Wet Stack
WFD
Mist Eliminator
Mist Eliminator Wash Pump (1+1)
Makeup Water Tank (1) (By others)
Filtrate Feed Tank
Unit 1 Absorber
Unit 2 Absorber
Absorber Area Sump Agitator (1) (By others)
Absorber Area Sump Pump (1+1) (By others)
Absorber Area Sump (1) (By others)
Mill Product Tank
Limestone Area Sump Agitator (1) (By others)
Limestone Area Sump Pump (1+1) (By others)
Limestone Area Sump (1) (By others)
Filter Feed Tank (1) (By others)
Filter Feed Tank Agitator (1) (By others)
Filter Feed Pump (1+1) (By others)
Limestone Slurry Storage Tank Agitator (1)
Limestone Slurry Storage Tank (1)
Limestone Slurry Feed Pump (1+1)
Gypsum Belt Filter (1)
Belt Filter Filtrate Receiver (1)
Belt Filter Filtrate Receiver Pump (1)
Vacuum Pump (1)
Cloth Wash Pump (1)
Cloth Wash Tank (1)
Gypsum Belt Filter System A
Gypsum Belt Filter System B
Gypsum Collecting Conveyor (1)
Reclaim Water Sump Agitator (1) (By others)
Reclaim Water Sump Pump (1+1) (By others)
Reclaim Water Sump (1) (By others)
Limestone
Limestone Storage Bin Vent Blower (1)
Limestone Storage Bin Vent Filter (1)
Limestone Storage Bin (1)
Limestone Weigh Feeder (1)
Ball Mill Hydrocyclone (1)
Mill Product Tank Agitator (1)
Limestone Ball Mill (1)
Mill Product Pump (1+1)
Mill Product Tank (1)
Limestone Grinding System A
Limestone Grinding System B

PREDICTED FGD SYSTEM MATERIAL BALANCE Rev.A 2011/7/21

Utility:	Sargent & Lundy	Boiler Load:	100.0 %	Limestone Purity:	93.0 %
Station:	Units 1&2	Gross MWatts:	Unit 1 705MW, Unit 2 745MW	Utilization:	1.10
Fuel:	PRB Coal	Heat Input	Unit 1 7,538 MMBtu/hr	SO_2 Removal:	98.0 %
			Unit 2 7.538 MMBtu/hr	Cl concentration	< 20,000 ppm

STREAM NUMBERS	A	B	I	C	D	J		
IDENTIFICATION	Unit 1 Absorber Inlet	Unit 1 Absorber Outlet	Unit 1 Oxidation Air	Unit 2 Absorber Inlet	Unit 2 Absorber Outlet	Unit 2 Oxidation Air		
VOLUME - ACFM x 1000	3,337	2,699	5.4	3,504	2,863	5.4		
VOLUME-SCFM(wet) x 1000 (at 68F)	2,165	2,392	7.3	2,325	2,543	7.3		
TEMPERATURE - °F	364	140	212	353	138	212		
PRESSURE - IN. W.G. (PSI)	9.0	2.7	(10.5)	9.0	2.5	(10.5)		
TOTAL GAS x 1000 LB/HR	9,833	10,445	32.2	10,453	11,104	32.2		
DRY GAS - x1000 LB/HR	9,134	9,163	31.3	9,738	9,796	31.3		
H_2O VAPOR x1000 LB/HR	699	1,282	0.8	715	1,308	0.8		
SO_2 - LB/HR	16,911	338	0	16,911	338	0		
SO_2 - ppm-dry	875	18	0	818	16	0		
SO_3 - ppm-dry	0	0	0	0	0	0		
CO_2 - vol.%	10.7	9.8	0.0	10.0	9.2	0.0		
O_2 - vol.%	6.9	6.2	20.2	7.7	7.0	20.2		
HCl - LB/HR	87	< 9	0	87	< 8	0		
HF - LB/HR	0	0	0	0	0	0		
ENTRAINED H_2O - LB/HR	0	676	0	0	725	0		
FLYASH -LB/HR	226	< 226	0	226	< 226	0		

LIQUID STREAMS

STREAM NUMBERS	111	121	301	312	322	303		
IDENTIFICATION	Unit 1Absorber Bleed slurry	Unit 2 Absorber Bleed slurry	By product Gypsum (Common)	Filtrate slurry to Unit 1 Absorber	Filtrate slurry to Unit 2 Absorber	Filtrate slurry to Ball Mill Make-up (Common)		
FLOW - GPM	256	256	-	135	135	271		
TEMPERATURE - °F	140	138	139	125	125	125		
Cl- (ppmw)	< 20,000	< 20,000	< 20,000	< 20,000	< 20,000	< 20,000		
TOTAL WEIGHT - T/HR	81	81	54	35	35	71		
WATER - T/HR	52	52	5	33	33	66		
SUSPENDED SOLIDS-T/HR	24	24	48	0	0	0		
SUSPENDED SOLIDS-WT%	30	30	90	0	0	0		
DISSOLVED SOLIDS-T/HR	5	5	0	2	2	4		
SPECIFIC GRAVITY	1.26	1.27	-	1.04	1.04	1.04		
Gypsum Purity	-	-	91	-	-	-		

LIQUID STREAMS

STREAM NUMBERS	500	510	520		611	612	613	614
IDENTIFICATION	LS to B/M (Common)	LS Slurry to Unit 1 Absorber	LS Slurry to Unit 2 Absorber		Unit 1 Absorber Make up	Unit 1 W/D wash	Unit 1 Mist Eliminator wash	Unit 1 Oxidation Air line wash
FLOW - GPM	-	159	159		700	80	333	9
TEMPERATURE - °F	90	122	122		90	90	90	90
Cl- (ppmw)	NA	< 20,000	< 20,000		30	30	30	30
TOTAL WEIGHT - T/HR	30	50	50		174	20	83	2
WATER - T/HR	0	33	33		174	20	83	2
SUSPENDED SOLIDS-T/HR	30	15	15		0	0	0	0
SUSPENDED SOLIDS-WT%	100	30	30		-	-	-	-
DISSOLVED SOLIDS-T/HR	0	2	2		-	-	-	-
SPECIFIC GRAVITY	2.71	1.27	1.27		1.00	1.00	1.00	1.00

LIQUID STREAMS

STREAM NUMBERS	621	622	623	624	605	606		
IDENTIFICATION	Unit 2 Absorber Make up	Unit 2 W/D wash	Unit 2 Mist Eliminator wash	Unit 2 Oxidation Air line wash	Gypsum Filter wash (Common)	Ball Mill Make-up (Common)		
FLOW - GPM	720	80	333	9	156	0		
TEMPERATURE - °F	90	90	90	90	90	90		
Cl- (ppmw)	30	30	30	30	30	30		
TOTAL WEIGHT - T/HR	179	20	83	2	39	0		
WATER - T/HR	179	20	83	2	39	0		
SUSPENDED SOLIDS-T/HR	0	0	0	0	0	0		
SUSPENDED SOLIDS-WT%	-	-	-	-	-	-		
DISSOLVED SOLIDS-T/HR	-	-	-	-	-	-		
SPECIFIC GRAVITY	1.00	1.00	1.00	1.00	1.00	1.00		

NOTES:
(1) LS = LIMESTONE, W/D = WET AND DRY

Fw: Advatech responses
WAYSHALEE A PATEL to: CHRISTOPHER D HORNISH 08/11/2011 02:52 PM

Advatech part 2

Wayshalee A. Patel
Fossil Power Technologies
Sargent & Lundy, LLC
55 E. Monroe
Chicago, IL 60603-5780
P: (312) 269-6619
F: (312) 269-2499
wayshalee.a.patel@sargentlundy.com

----- Forwarded by WAYSHALEE A PATEL/Sargentlundy on 08/11/2011 02:52 PM -----

{In Archive} Advatech responses

George_Sacco to: wayshalee.a.patel 08/10/2011 03:32 PM

Cc: scott.d.miller

Archive:

Wayshalee,
Please find below our responses to the questions that you had sent to us.

Please call or e-mail any additional questions you may have.

Regards,

Our responses follow:

1. Please update your proposal to include C-276 for all internals, including the wet/dry interface.

Advatech response: The materials of construction we proposed in our design (C276 wrapped supports, FRP headers and ME supports, lined pumps, etc.) are capable of handling chloride levels of 50,000 ppm, as you requested we consider. All materials reflect the same design we are currently executing for a system designed to operate at 44,000 ppm Cl-. These elevated chloride levels will have some impact on SO2 removal that was not taken into consideration in our proposed design. Decreased removal efficiency could result in the need for larger pumps and possibly a larger vessel.

2. Please include 2 x 100% hydroclones for primary dewatering.

Advatech response: A price adder to design/furnish hydrocyclones with associated support steel and piping is $500,000. The cost shown is for 2 clusters (4 cyclones each)
3 @ 100 GPM = 300 (256) gpm with one (1) cyclone in each cluster as a spare). As previously mentioned, in the vast majority of the cases, hydroclones are not required to achieve effective dewatering, especially when wallboard-grade gypsum isn't a requirement. Whether or not hydrocyclones will actually be required will depend upon limestone quality. If the composition of SiO_2 and Fe_2O_3 are greater than the Advatech specification of 1 wt% and 0.2 wt%, respectively, then hydroclones could possibly be needed. If the intent of the hydroclones is to allow for fines to be removed from the system, a slipstream from the overflow would have to be purged in some manner.

3. Please do not include painting.

Advatech response: Painting was not included in our budgetary estimate. The carbon steel piping in our scope is shop primed though.

4. Please do not include expansion joints.

Advatech response: The deduct for removal of the expansion joints from our scope of supply is $145,000
.

5. Please verify that no buildings, foundations, site/civil work, flues, electrical work, insulation, controls, elevator, model study have been included.

Advatech response: Confirmed.

6. Please verify that the only installation included is the shell and does not include any of the internals.

Advatech response: Confirmed.

George Sacco

VP Business Development
Advatech
400 Northpark Town Center
1000 Abernathy Road, NE
Suite 900
Atlanta, Ga 30328
Tel: 678-808-8841
Fax: 678-808-8400
Cell: 770-335-3559
george.sacco@wgint.com

This e-mail and any attachments contain URS Corporation confidential information that may be proprietary or privileged. If you receive this message in er
information and you should destroy the e-mail and any attachments or copies.

Owner: Nebraska Public Power District
Station: Gerald Gentlemen Station - Sutherland, NE
Engineer: Sargent & Lundy
RFQ: Electronic Dated September 11, 2007
Hamon Custodis Budget Proposal No. OE-7549 Rev.1
Chimney Geometry / Budget Price / Construction Schedule
Date: July 15, 2010

Description	Base Bid Each of (2) Chimneys	Option 1 (1) Chimney w/(2) Liners
Overall Chimney Height (ft)	550	550
Shell Height (ft)	530	530
Shell Top O.D. (ft)	45	77
Shell Bottom O.D. (ft)	67	77
Number of Liners	1	2
Liner Height (ft)	450	450
Liner Material	FRP	FRP
Liner Top I.D. (ft)	30	30
Liner Bottom I.D. (ft)	30	30
Column Construction Method	Jumpform	Slipform
Number of Platforms	3	3
Elevator (Interior/Exterior)	Interior	Interior
Number of Levels of Obstruction Lighting	2	2
Concrete Roof or Rain Hood	Concrete Roof	Concrete Roof
Budget Estimate	$12,843,000	$22,841,000
Construction Duration (mths.)	27	34

This proposal is based upon the attached Scope of Work and Pricing Notes

The information contained herein is confidential and proprietary information of Hamon Custodis, Inc. and is not to be disclosed to any third party without the express written consent of Hamon Custodis. This information is submitted solely for the purpose of enabling the client to evaluate Hamon Custodis budget prices for the Owner, Station, and/or Engineer identified above, and shall be retuned to Hamon Custodis or destroyed if so requested by Hamon Custodis.

ROBERTS & SCHAEFER Company
ENGINEERS AND CONTRACTORS
A KBR Company

222 SOUTH RIVERSIDE PLAZA
CHICAGO, ILLINOIS 60606-3986
SUITE 1800
TELEPHONE: 312.236.7292
FAX: 312.726.2872

August 31, 2011

Bhupendra Shah
Email: bhupendra.j.shah@sargentlundy.com
Phone: 312-269-3441

Re: Sargent & Lundy – Request Budgetary Quotation
Limestone & Gypsum Handling Systems
Roberts & Schaefer Company Proposal No. 07068

Dear Bhupendra,

Roberts and Schaefer Company is pleased to submit our budgetary proposal for the design and supply of the Limestone & Gypsum Handling Systems.

Our proposal is based on the provided technical specifications and preliminary drawings with your inquiry dated 7/21/11. Please refer to the enclosed scope of supply and budgetary pricing.

Thank you for the opportunity to be of service to Sargent & Lundy. Please do not hesitate to contact us should you have any questions.

Very Truly Yours,

ROBERTS & SCHAEFER COMPANY

Ramesh Amin
Vice President – Estimating

Cc: Wayne Kirkpatrick

Scope of Supply

Limestone Handling System:

- Rail unloading hopper enclosure 25'w x 60'L x 30'H Insulated siding and roofing
- Car shaker
- Two (2) Steel track hoppers, 100T capacity each. Grizzly on top 12"x12" clear opening. Two 110# Rails each 60' long with supports on top of hoppers
- 72" Belt Feeder, 2000TPH, 50' Long LHBF-1
- Conveyor LH-1,48" wide, 2000 TPH, 550' Long, insulated siding and roofing for enclosed gallery
- Rail unloading vault and tunnel ventilation and heating
- Rail unloading vault sump pumps
- Belt scale on conveyor LH-1
- Telescope chute, 50' Travel
- Reclaim hopper, one (1), 30 ton capacity, platform steel, stairs in pit area and emergency escape hatch area
- Pin gate, one (1)
- Belt feeder, one (1), LHBF-2B, 36" wide, 100 to 400 TPH, 15' long
- Reclaim hoppers vault sump pumps
- Reclaim hoppers vault ventilation & heating
- Emergency reclaim feeder, LHBF-2B, 36" wide, 400 TPH, 8'-0 long
- Conveyors LH-2A & LH-2B, 30" wide, 400 TPH, 650' long, walk through enclosed gallery with insulated siding & roofing
- Belt scales, ± .55% accuracy, on conveyors LH-2A & LH-2B
- Cross belt, self cleaning magnetic separators on conveyors LH-2A & LH-2B
- Two silo feed reversible conveyors LH-3A & LH-3B, 30" wide, 40' long, 400 TPH
- Hoists & trolleys
- Fog type dust suppression system
    - At track hopper
    - Track hopper feeder discharge chute
    - Reclaim feeders discharge chute

  - Conveyors LH-2A & LH-2B discharge chute
- Conveyor Safety Devices
  - Pull cord switches
  - Zero speed switches
  - Belt misalignment switches
  - Start up horns
- Lighting fixtures for conveyor galleries, and track hopper building
- Conveyors LH-1 and LH-2A/2B gallery heating and ventilation system
- Fire protection (conveyors of belt feeders drives only)
- Service water piping
- Service air piping

Gypsum Handling System:

- Diverter gates, two (2)
- Conveyors GH-1A & GH-1B, 24" wide, 75' long, 75 TPH, deck type truss with 2'-6 wide walkway
- Conveyors, GH-2A & GH-2B, 24" wide, 200' long, 75 TPH, walk through enclosed gallery with insolated siding and roofing
- Telescopic chutes, two (2), 45' travel
- Conveyors GH-2A/2B gallery heating & ventilation system
- Fire protection system for conveyor drives only
- Service water piping
- Service air piping
- Safety Devices
  - Pull cord switches
  - Zero speed switches
  - Plug chute switches
  - Belt misalignment switches
  - Startup horns

Furnished by Others:

- Foundations – Design and install
- Electricals – Transformers, MCCs, permanent wiring, lighting, grounding, communication, etc.
- Control system – DCS
- Erection, commissioning and testing
- Field technical assistance
- Concrete floor for conveyor galleries
- Limestone day silos with bin vent filters
- Reagent prep building with ventilation
- Compressed air
- Service Air
- Site prep & site drainage

Budget Pricing

Engineering, procurement, and delivery of the Limestone handling system per enclosed scope of supply:	$ **7,090,000**
Engineering, procurement, and delivery of the Gypsum handling system per enclosed scope of supply:	$ **2,900,000**

Note: This price is a non-binding, indicative estimate submitted for budget purposes, and is not a quote for a lump sum or firm, fixed price. Taxes are not included.

RE: Axial ID Booster Fan Budget Request

Theodore P. Hollo to: CHRISTOPHER.D.HORNISH 07/26/2011 03:32 PM

Cc: "Theodore P. Hollo", "Robert Miles", "roger blomquist", "Daniel Anderson"

History: This message has been forwarded.

Christopher,

I have attached initial general arrangement drawings, fan curves and sound data for the fans you would need for those conditions listed.

I have also attached a typical schedule for a similar scope project recently bid to S&L. The fan sizes and scope are comparable, and the schedule can be considered accurate for this project also.

4 fans systems this size would sell for around $10,840,000. That would include the following scope:

1. AXIAL BOOSTER FANS, COMPLETE (BLADES, ROTORS HOUSINGS, DIFFUSER, INLET ETC)
2. STALL WARNING SYSTEMS
3. DRIVE MOTORS (HYUNDAI OR SIMILAR)
4. LUBE UNITS (W/ENCLOSURE)
5. Dampers are NOT included, but would typically run $50-55K each with an additional $22-25K each for actuators (Beck or equal).

Note that the blades would generally be forged steel (with wear coating) which have been shown to be far superior in ID application to nodular iron. Cost difference between those blade types is minimal.

We hope this meets your immediate needs.

Best regards,

Theodore P. Hollo

Director - North American Sales

TLT-Babcock, Inc.
260 Springside Drive
Akron, OH 44333
Phone: (330) 869-4779
Cell: (330) 995-6099

Fax: (330) 869-4719
E-mail: thollo@tltbabcock.com

The information transmitted in this correspondence is intended only for the person or entity to which it is addressed and contains confidential and/or privileged information. Any review, retransmission, dissemination or other use of, or taking of any action in reliance upon, this information by persons or entities other than the intended recipient is strictly prohibited. If you received this in error, please contact the sender and delete the material from any computer.

From: CHRISTOPHER.D.HORNISH@sargentlundy.com [mailto:CHRISTOPHER.D.HORNISH@sargentlundy.com]
Sent: Friday, July 22, 2011 3:57 PM
To: Theodore P. Hollo
Cc: STEVEN.R.PASIMENI@sargentlundy.com; PAUL.HOORNAERT@sargentlundy.com; WAYSHALEE.A.PATEL@Sargentlundy.com
Subject: Axial ID Booster Fan Budget Request

Ted,

S&L is supporting a project investigating new FGD and SCR installations. Please provide a budget quotation for axial ID booster fans for a PRB coal fired generating station, and estimated lead time for delivery (weeks after receipt of order, allowing 10 weeks for initial drawings submittal, review and approval). The budget quotations are required by July 29, 2011.

Scope of supply and design criteria:

Two (2) Unit 1 and two (2) Unit 2 single speed, two-stage axial flow fans (four total) with cast nodular iron blades, hydraulic and lubricating oil skids furnished with ventilated walk-in enclosures, and 2 x 100% seal air fan skid with interconnecting duct and air dampers. Fans shall be installed downstream of existing baghouses and ID fans and upstream of a new FGD system. Fans shall be designed for two operating conditions: 1) FGD only and 2) FGD with SCR. The fan stall line values shall not be greater than 90% of the volume flow (horizontal axis) of any operating condition nor less than 110% of the pressure rise (vertical axis) of any operating condition.

Two (2) 7.2 kv 3-phase, 60 hz squirrel cage induction motors with copper rotor bars, Type II enclosure, space heaters, 1.0 service factor, Class F non-hygroscopic, sealed winding insulation. Motor shall be capable of starting and accelerating to full speed at 80% of rated voltage without overheating.

Maximum load and test block performance requirements are as follows.

Fan inlet temperature at Test Block is 330F. Fan inlet temperature at max load conditions (SCR/FGD) is 320F.

Unit 1 Fans	Fan inlet pressure	Fan total pressure	Low Flow	High Flow
	inches w.g.	inches w.g.	acfm	acfm

Test Block	-21	**36**	1,380,000 *	**1,830,000**
SCR + FGD	-15	26	1,150,000	1,540,000
FGD only	-4	15	1,150,000	1,540,000

*Stall criteria only

Unit 2 Fans	Fan inlet pressure inches w.g.	Fan total pressure inches w.g.	Low Flow acfm	High Flow acfm
Test Block	-21	**36**	1,460,000 *	**1,930,000**
SCR + FGD	-15	27	1,250,000	1,600,000
FGD only	-6	18	1,250,000	1,600,000

*Stall criteria only

I appreciate your help. Let me know if you need further clarification.

Thank you,
Chris Hornish
Fossil Power Technologies
Sargent & Lundy, LLC
55 E. Monroe St.
Chicago, IL 60603

Phone: (312) 269-3794

SAF42.5-21.2-2 Curve-Unit 1.pdf SAF42.5-21.2-2 Curve-Unit 2.pdf

SAF42.5-21.2-2 GAD.pdf SAF42.5-21.2-2 Sound-Unit 1.pdf SAF42.5-21.2-2 Sound-Unit 2.pdf

SAF42.5-21.2-2 Unit 1 of speed-torque.pdf SAF42.5-21.2-2 Unit 2 of speed-torque.pdf

Prelim Schedule - GenOn Conemaugh Units1and2 R1.pdf

Question 1

Activity Description	Early Start	Late Finish	Orig Dur	Resp.	Predecessors	Total Float
CONTRACT START - FORMAL RELEASE	06JUL11		0	MKT		0
RELEASE TO PROCURE / FAB	03OCT11*		0	MKT		8
GAD & FOUNDATION PLAN - PRELIMINARY	06JUL11	16AUG11	30	ENG	G200000001*	0
GAD & FOUNDATION PLAN - FINAL	17AUG11	16FEB12	20	ENG	G200500000*	110
GAD - CUSTOMER APPROVAL	17AUG11	13SEP11	20	CUS	G200500000*	0
GENERAL INFORMATION PAGES	17AUG11	30AUG11	10	ENA	G200500000*	0
ROTOR ASSEMBLY DWG - ENG	22SEP11	01MAR12	10	ENA	G200500000, G200500002, G201200100*, G201300100,	104
ROTOR ASSEMBLY DWG - CUSTOMER REVIEW	06OCT11	29MAR12	20	ENA	G201000025*	104
ROTOR ASSEMBLY PARTS (MISC) - PLACE P.O.S	03NOV11	12APR12	10	PUR	G201000025, G201000030*	104
ROTOR ASSEMBLY PARTS (MISC) - VENDOR FAB	17NOV11	07JUN12	40	VEN	G201000050*	104
ROTOR ASSEMBLY - RELEASE WORK ORDER	06OCT11	07JUN12	10	PRC	G201000025*	164
HOUSING TO ROTOR ASSEMBLY DWG - ENG	06OCT11	12APR12	10	ENA	G201000025*	124
HOUSING TO ROTOR ASSEMBLY PARTS (MISC)-PLACE POs	27OCT11	03MAY12	10	PUR	G201000125*	124
HOUSING TO ROTOR ASSEMBLY PARTS (MISC) -VEND FAB	10NOV11	28JUN12	40	VEN	G201000150*	124

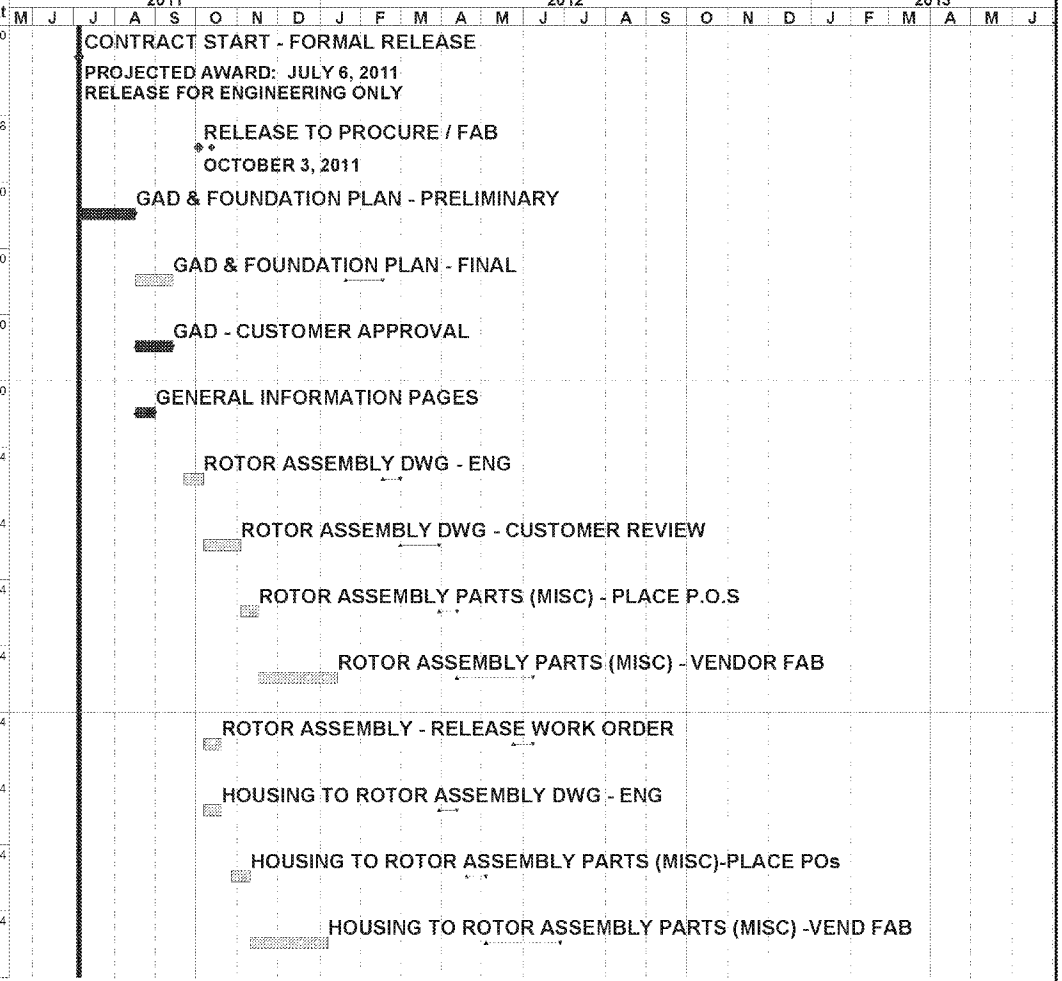

Data Date	06JUL11
Finish Date	31OCT12
Must Finish Date	10MAY13
Run Date	23MAY11 10:13

Early Bar
Late Bar
Progress Bar
Critical Activity

© Primavera Systems, Inc.

PROP - GEN2 TLT-BABCOCK, INC. Sheet 1 of 17
PROPOSAL SCHEDULE
GenOn Conemaugh -- Units 1 and 2
Engineering First
Hold on Procurement / Fab
Proposal #11-01443

Date	Revision	Checke	Approve

Activity Description	Early Start	Late Finish	Orig Dur	Resp.	Predecessors	Total Float
HOUSING TO ROTOR ASSEMBLY - RELEASE WORK ORDER	20OCT11	28JUN12	10	PRC	G201000125*	169
ROTOR ASSEMBLY - UNIT 2 - FAN 1	06FEB12	21JUN12	10	RTA	G201000075, G201000100, G201200200, G201400200,	89
SEND BLADES OUT FOR COATING - UNIT 2 - FAN 1	02MAY12	21JUN12	15	SHP	G201300101, G201300216*	22
ROTOR ASSEMBLY BALANCE - UNIT 2 - FAN 1	23MAY12	26JUN12	3	BAL	G201000200, G201000201*, G201300101	22
BLADE CYCLING - UNIT 2 - FAN 1	28MAY12	28JUN12	2	RTA	G201000202*	22
ROTOR TO HOUSING ASSEMBLY - UNIT 2 - FAN 1	30MAY12	20JUL12	15	RTH	G201000175, G201000195, G201000202, G201000203*,	22
ROTOR ASSEMBLY - PREPARE TO SHIP - UNIT 2 -FAN 1	20JUN12	10AUG12	5	SHP	G201000204*, G209400150	32
ROTOR ASSEMBLY - UNIT 2 - FAN 2	20FEB12	13JUL12	10	RTA	G201000200*, G201200205*, G201400200, G2014A0200,	94
SEND BLADES OUT FOR COATING - UNIT 2 - FAN 2	16MAY12	13JUL12	15	SHP	G201300101, G201300216*	27
ROTOR ASSEMBLY BALANCE - UNIT 2 - FAN 2	06JUN12	18JUL12	3	BAL	G201000202, G201000211, G201000212*, G201300101	27
BLADE CYCLING - UNIT 2 - FAN 2	11JUN12	20JUL12	2	RTA	G201000213*	27
ROTOR TO HOUSING ASSEMBLY - UNIT 2 - FAN 2	20JUN12	10AUG12	15	RTH	G201000204*, G201000211, G201000213, G201000215,	22
ROTOR ASSEMBLY - PREPARE TO SHIP - UNIT 2 -FAN 2	12JUL12	17AUG12	5	SHP	G201000205, G201000216*, G209400150	22
ROTOR ASSEMBLY - UNIT 1 - FAN 1	28MAR12	04FEB13	10	RTA	G201000211, G201100285, G201100286*, G201200150,	211

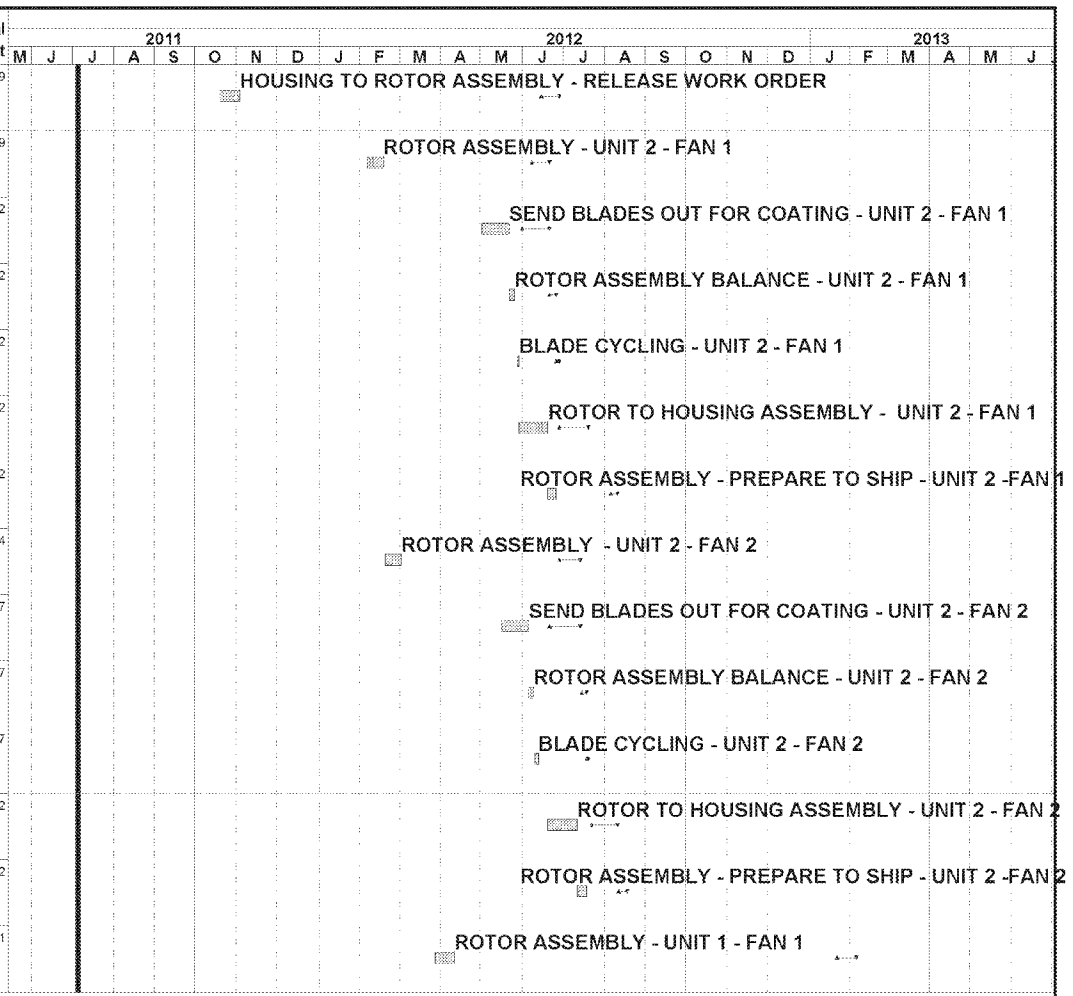

Data Date	06JUL11
Finish Date	31OCT12
Must Finish Date	10MAY13
Run Date	23MAY11 10:13

Early Bar
Late Bar
Progress Bar
Critical Activity

© Primavera Systems, Inc.

PROP - GEN2 TLT-BABCOCK, INC. Sheet 2 of 17
PROPOSAL SCHEDULE
GenOn Conemaugh -- Units 1 and 2
Engineering First
Hold on Procurement / Fab
Proposal #11-01443

Date	Revision	Checke	Approve

Activity Description	Early Start	Late Finish	Orig Dur	Resp.	Predecessors	Total Float
SEND BLADES OUT FOR COATING - UNIT 1 - FAN 1	30MAY12	04FEB13	15	SHP	G201300101, G201300230*	161
ROTOR ASSEMBLY BALANCE - UNIT 1 - FAN 1	20JUN12	07FEB13	3	BAL	G201000238, G201000240*	161
BLADE CYCLING - UNIT 1 - FAN 1	25JUN12	11FEB13	2	RTA	G201000242*	161
ROTOR TO HOUSING ASSEMBLY - UNIT 1 - FAN 1	13AUG12	04MAR13	15	RTH	G201000211, G201000213, G201000216, G201000242,	129
ROTOR ASSEMBLY - PREPARE TO SHIP - UNIT 1 -FAN 1	03SEP12	25MAR13	5	SHP	G201000211, G201000213, G201000216, G201000217,	139
ROTOR ASSEMBLY - UNIT 1 - FAN 2	11APR12	26FEB13	10	RTA	G201000238*, G201100285, G201100286*, G201200245,	216
SEND BLADES OUT FOR COATING - UNIT 1 - FAN 2	13JUN12	26FEB13	15	SHP	G201300101, G201300232*	166
ROTOR ASSEMBLY BALANCE - UNIT 1 - FAN 2	05JUL12	28FEB13	3	BAL	G201000242, G201000248, G201000250*	166
BLADE CYCLING - UNIT 1 - FAN 2	10JUL12	04MAR13	2	RTA	G201000250*	166
ROTOR TO HOUSING ASSEMBLY - UNIT 1 - FAN 2	10SEP12	25MAR13	15	RTH	G201000244, G201000248, G201000260, G201000261,	124
ROTOR ASSEMBLY - PREPARE TO SHIP - UNIT 1 -FAN 2	01OCT12	01APR13	5	SHP	G201000246, G201000262*, G209400200	124
MAIN BEARING - ENG	17AUG11	26JAN12	10	ENA	G200500000*	105
MAIN BEARING - MEDINA TO CONFIM TOOLING	31AUG11	23FEB12	5	MBG	G201100000*	120
MAIN BEARING - PLACE PURCHASE ORDERS	03OCT11	23FEB12	15	PUR	G200000010*, G201100000, G201100050	87

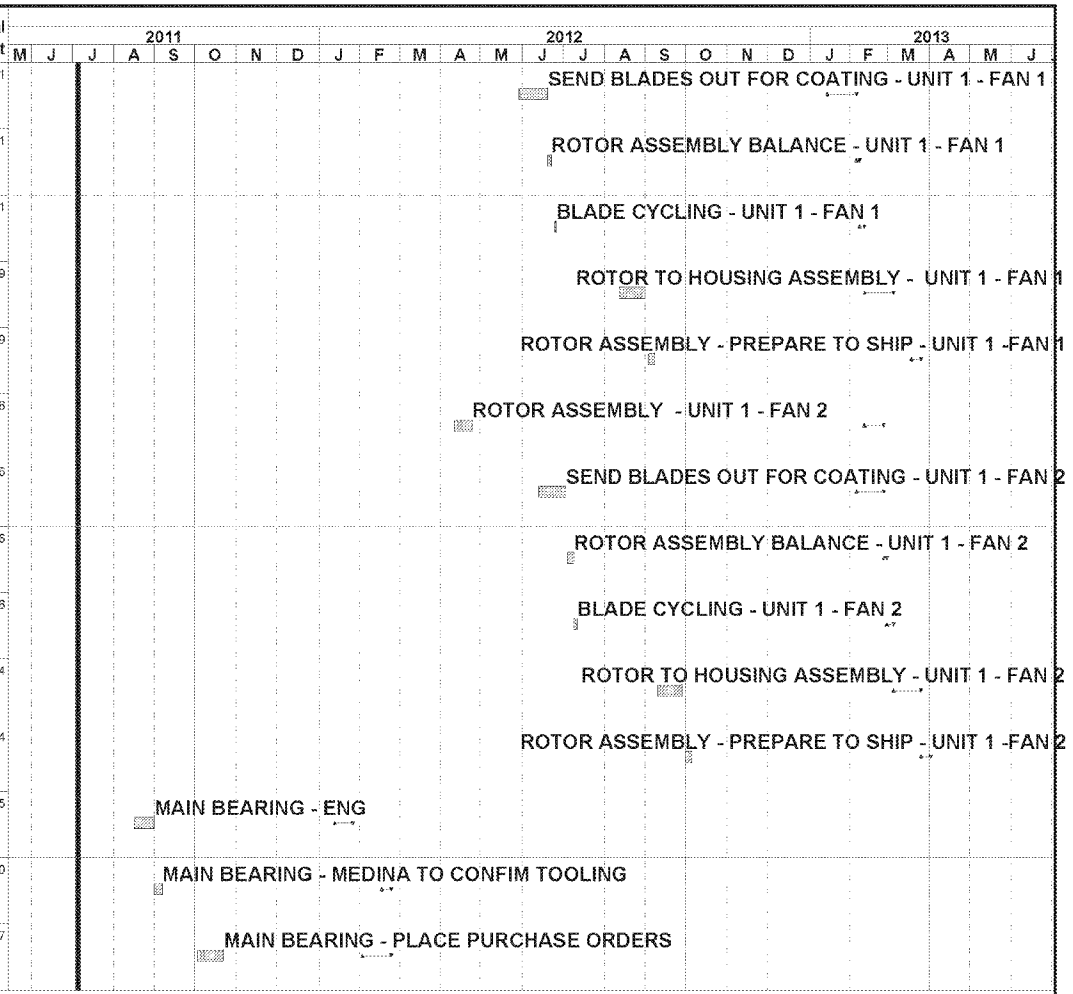

Data Date	06JUL11
Finish Date	31OCT12
Must Finish Date	10MAY13
Run Date	23MAY11 10:13

Early Bar
Late Bar
Progress Bar
Critical Activity

© Primavera Systems, Inc.

PROP - GEN2 TLT-BABCOCK, INC. Sheet 3 of 17
PROPOSAL SCHEDULE
GenOn Conemaugh -- Units 1 and 2
Engineering First
Hold on Procurement / Fab
Proposal #11-01443

Date	Revision	Checke	pprove

Question 1

Activity Description	Early Start	Late Finish	Orig Dur	Resp.	Predecessors	Total Float
MAIN BEARING - FAB - PARTS - UNIT 2- FAN 1	24OCT11	14JUN12	80	VEN	G201100100*	87
MAIN BEARING - ASSY IN MEDINA - UNIT 2- FAN 1	15FEB12	26JUN12	8	MBG	G201100200*	87
MAIN BEARING - SIX HOUR TEST - UNIT 2 - FAN 1	27FEB12	28JUN12	2	MBG	G201100205*	87
MAIN BEARING - FAB - PARTS - UNIT 2 - FAN 2	24OCT11	06JUL12	80	VEN	G201100100*, G201100200*	102
MAIN BEARING - ASSY IN MEDINA - UNIT 2 - FAN 2	29FEB12	18JUL12	8	MBG	G201100205, G201100206*, G201100210	92
MAIN BEARING - SIX HOUR TEST - UNIT 2 - FAN 2	12MAR12	20JUL12	2	MBG	G201100215*	92
MAIN BEARING - FAB - PARTS - UNIT 1 - FAN 1	24OCT11	07JAN13	80	VEN	G201100100*, G201100210*	231
MAIN BEARING - ASSY IN MEDINA - UNIT 1 - FAN 1	14MAR12	17JAN13	8	MBG	G201100100, G201100210, G201100215, G201100216*,	211
MAIN BEARING - SIX HOUR TEST - UNIT 1 - FAN 1	26MAR12	21JAN13	2	MBG	G201100265*	211
MAIN BEARING - FAB - PARTS - UNIT 1 - FAN 2	24OCT11	28JAN13	80	VEN	G201100100*, G201100255*	246
MAIN BEARING - ASSY IN MEDINA - UNIT 1 - FAN 2	28MAR12	07FEB13	8	MBG	G201100265, G201100266*, G201100275	216
MAIN BEARING - SIX HOUR TEST - UNIT 1 - FAN 2	09APR12	11FEB13	2	MBG	G201100265*	216
ROTOR & HUB - PRELIMINARY ENGINEERING	13JUL11	19DEC11	20	ENA	G201300000*	94
REVIEW SPEC FOR FEA - ROTOR	10AUG11	20DEC11	1	ENA	G201200000*	94

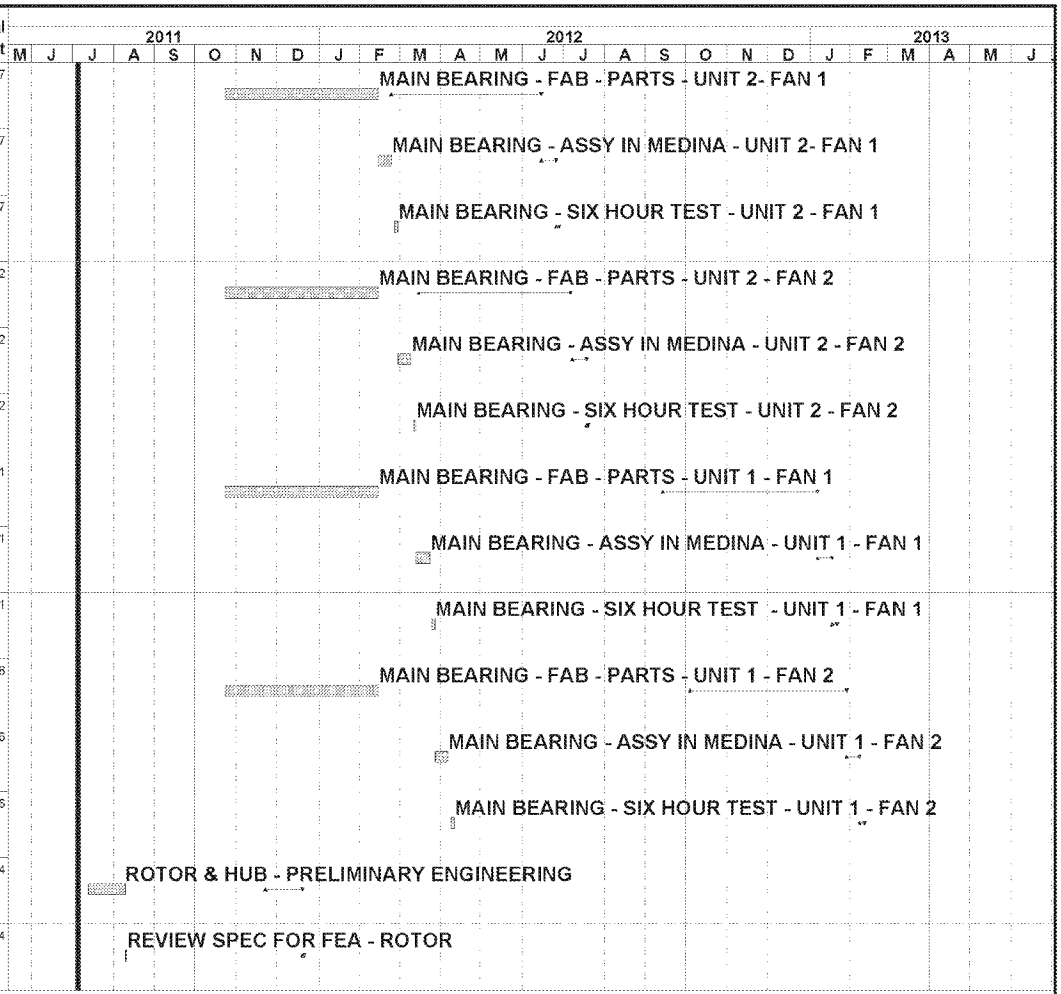

Data Date	06JUL11
Finish Date	31OCT12
Must Finish Date	10MAY13
Run Date	23MAY11 10:13

Early Bar
Late Bar
Progress Bar
Critical Activity

© Primavera Systems, Inc.

PROP - GEN2 **TLT-BABCOCK, INC.** **Sheet 4 of 17**
PROPOSAL SCHEDULE
GenOn Conemaugh -- Units 1 and 2
Engineering First
Hold on Procurement / Fab
Proposal #11-01443

Date	Revision	Checke	Approve

Activity Description	Early Start	Late Finish	Orig Dur	Resp.	Predecessors	Total Float
FINITE ELEMENT ANALYSIS - ROTOR	11AUG11	19JAN12	20	ENA	G201200025*	94
ROTOR & HUB - FINAL ENG	08SEP11	02FEB12	10	ENA	G200500000, G201200050*	94
ROTOR & HUB - NESTING	22SEP11	16FEB12	10	ENA	G201200100*	94
ROTOR & HUB - PLACE P.O.	06OCT11	01MAR12	10	PUR	G200000010, G200650000, G201200150, G201200110*	94
ROTOR & HUB - FAB / MACHINE - UNIT 2 - FAN 1	20OCT11	07JUN12	70	LEI	G201200150*	94
ROTOR & HUB - FAB / MACHINE - UNIT 2 - FAN 2	10NOV11	28JUN12	70	LEI	G201200150, G201200200*	94
ROTOR & HUB - FAB / MACHINE - UNIT 1- FAN 1	01DEC11	21JAN13	70	LEI	G201200150, G201200205*	223
ROTOR & HUB - FAB / MACHINE - UNIT 1 - FAN 2	22DEC11	11FEB13	70	LEI	G201200150, G201200235*	223
BLADE - PRELIMINARY ENGINEERING	06JUL11	12SEP11	5	ENA	G200000001*	44
REVIEW SPEC FOR FEA - BLADE	13JUL11	13SEP11	1	ENA	G201300000*	44
FINITE ELEMENT ANALYSIS - BLADE	14JUL11	27SEP11	10	ENA	G201300025*	44
BLADE - FINAL ENG	28JUL11	11OCT11	10	ENA	G201300050*	44
BLADE - NESTING	11AUG11	25OCT11	10	ENA	G201300095*	44
BLADE MACHINING - PLACE SUBCONTRACT PO	03OCT11	09FEB12	10	PUR	G200000010*, G201300100	82

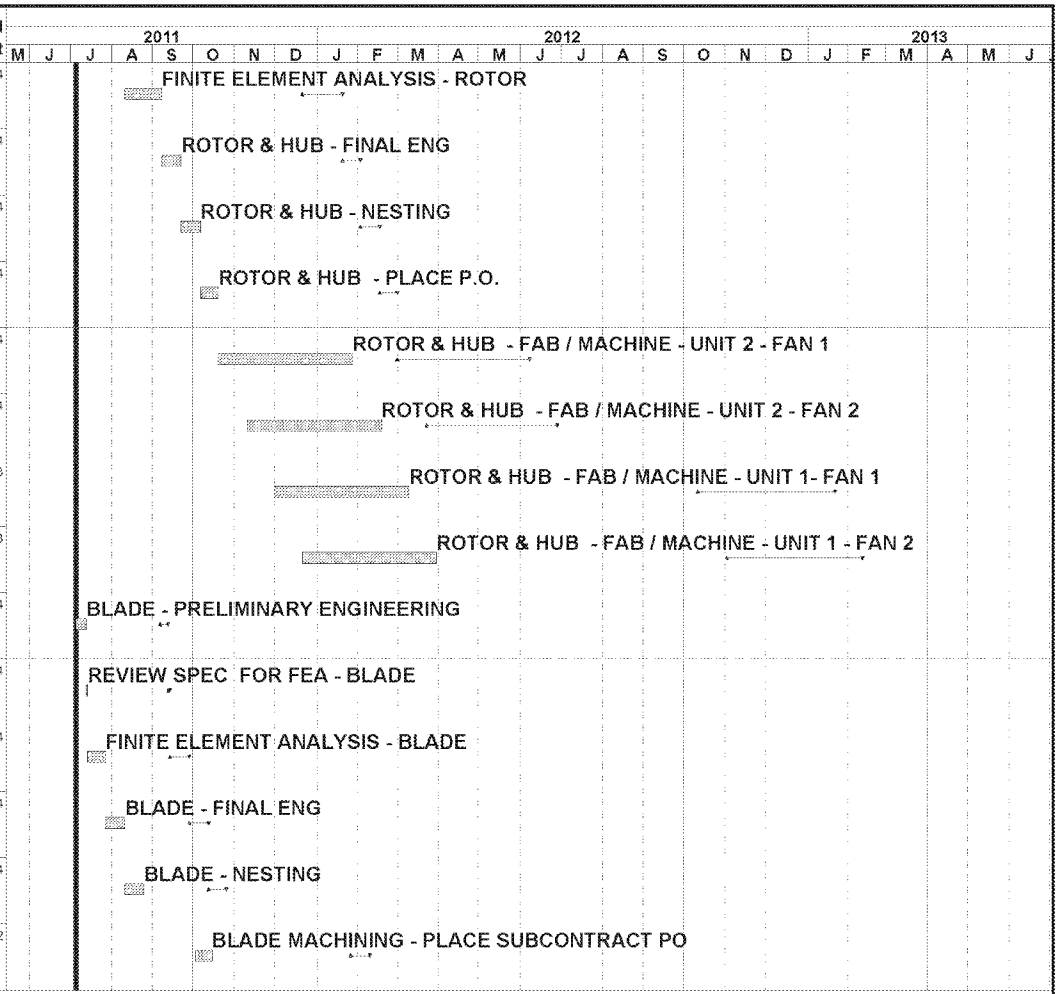

Data Date	06JUL11
Finish Date	31OCT12
Must Finish Date	10MAY13
Run Date	23MAY11 10:13

Early Bar
Late Bar
Progress Bar
Critical Activity

© Primavera Systems, Inc.

PROP - GEN2 TLT-BABCOCK, INC. Sheet 5 of 17
PROPOSAL SCHEDULE
GenOn Conemaugh -- Units 1 and 2
Engineering First
Hold on Procurement / Fab
Proposal #11-01443

Date	Revision	Checke	Approve

Activity Description	Early Start	Late Finish	Orig Dur	Resp.	Predecessors	Total Float
BLADE - PLACE PURCHASE ORDER	03OCT11	15NOV11	10	PUR	G200000010*, G201300100	22
BLADE BOXES - PLACE PURCHASE ORDER	03OCT11	12JAN12	10	PUR	G200000010*, G201300100	62
BLADE - NEW PATTERN (IF REQUIRED)	17OCT11	09FEB12	50	PUR	G201300150*	32
BLADE - NEW DIE (IF REQUIRED)	17OCT11	28DEC11	30	PUR	G201300150*	22
BLADE BOXES - FAB	17OCT11	23FEB12	30	PUR	G201300155*	62
BLADE BASE FORGINGS	28NOV11	08MAR12	50	PUR	G201300150, G201300190*, G201300195	22
BLADE - FAB & MACHINING - UNIT 2 - FAN 1	11JAN12	31MAY12	80	LEI	G201300101, G201300150, G201300175, G201300200*	22
BLADE - FAB & MACHINING- UNIT 2 - FAN 2	25JAN12	21JUN12	80	LEI	G201300150, G201300215*	27
BLADE - FAB & MACHINING - UNIT 1 - FAN 1	08FEB12	14JAN13	80	LEI	G201300150, G201300216*	161
BLADE - FAB & MACHINING - UNIT 1 - FAN 2	22FEB12	04FEB13	80	LEI	G201300150, G201300230*	186
ROTOR INTERNALS - MACHINED PARTS - ENG	28JUL11	12JAN12	30	ENA	G201300050*	89
ROTOR INTERNALS - MACHINED PARTS - PLACE PO'S	03OCT11	15MAR12	20	PUR	G200000010*, G201400000	97
ROTOR INTERNALS - MACH PARTS-FAB-UNIT 2-FANS 1&2	31OCT11	07JUN12	60	VEN	G201400100*	97
ROTOR INTERNALS -MACH PARTS- FAB-UNIT 1-FAN 1&2	31OCT11	21JAN13	60	VEN	G201400100*	256

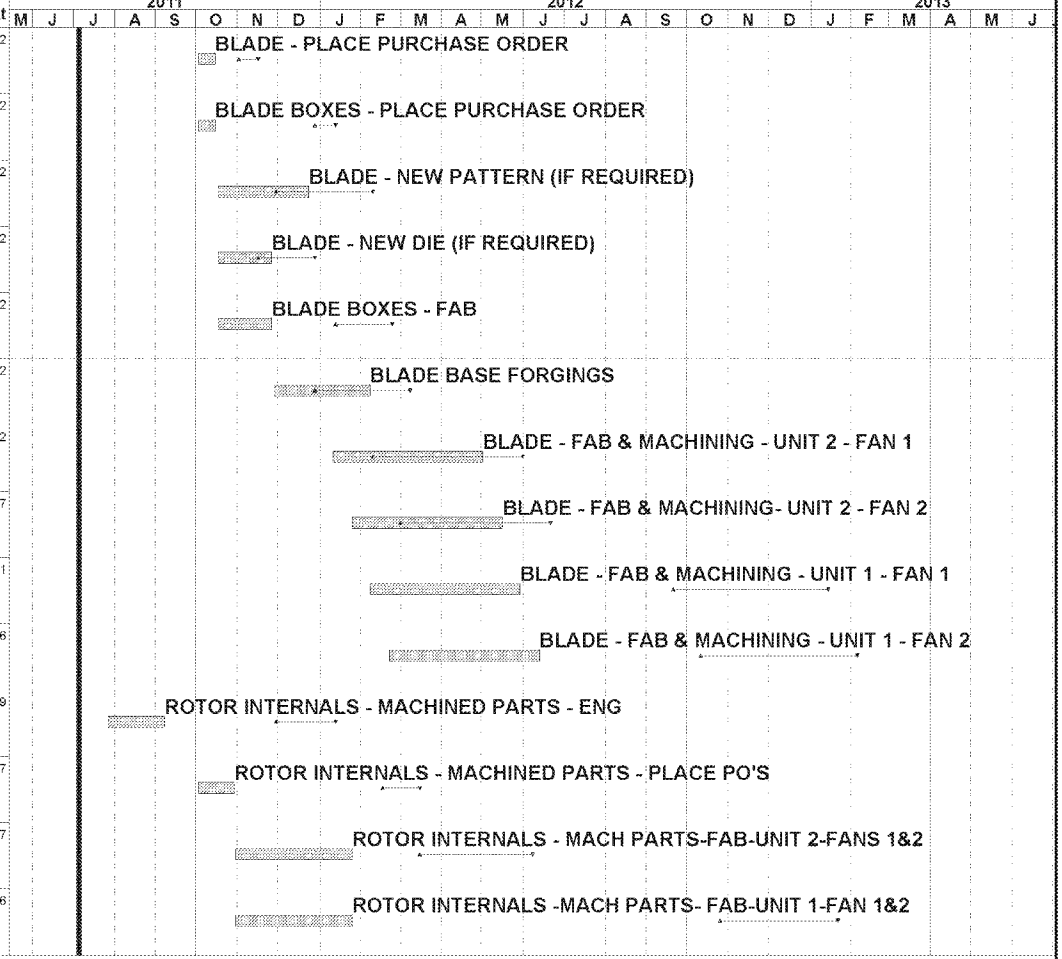

Data Date	06JUL11
Finish Date	31OCT12
Must Finish Date	10MAY13
Run Date	23MAY11 10:13

Early Bar
Late Bar
Progress Bar
Critical Activity

© Primavera Systems, Inc.

PROP - GEN2 TLT-BABCOCK, INC. Sheet 6 of 17
PROPOSAL SCHEDULE
GenOn Conemaugh -- Units 1 and 2
Engineering First
Hold on Procurement / Fab
Proposal #11-01443

Date	Revision	Checke	Approve

Activity Description	Early Start	Late Finish	Orig Dur	Resp.	Predecessors	Total Float
ROTOR INTERNALS -SEALS,O-RINGS,FASTE ENG	08SEP11	29MAR12	20	ENA	G201400000*	124
ROTOR INTERNALS -SEALS,O-RINGS,FAST - PLACE PO'S	13OCT11	26APR12	15	PUR	G200000010, G2014A0000*	124
ROTOR INTERNALS -SEALS,O-RINGS -UNIT 2-FANS 1&2	03NOV11	07JUN12	30	VEN	G2014A0100*	124
ROTOR INTERNALS -SEALS,O-RINGS- UNIT 1 - FAN 1&2	03NOV11	21JAN13	30	VEN	G2014A0100*	283
ROTORS - THRUST PARTS - ENG	08SEP11	09FEB12	20	ENA	G201400000*	89
ROTORS - THRUST PARTS - PLACE PO'S	13OCT11	15MAR12	20	PUR	G200000010, G2014B0000*	89
ROTORS - THRUST PARTS- FAB - UNIT 2 - FANS 1 & 2	10NOV11	07JUN12	60	VEN	G2014B0100*	89
ROTORS - THRUST PARTS- FAB - UNIT 1 - FAN 1 & 2	10NOV11	21JAN13	60	VEN	G2014B0100*	248
ROTOR/DRIVE COVERS / HYD SUPPORT - ENG	08SEP11	09FEB12	20	ENA	G201400000*	89
ROTOR/DRIVE COVERS / HYD SUPPORT - NESTING	06OCT11	16FEB12	5	ENA	G2014C0000*	89
ROTOR/DRIVE COVERS / HYD SUPPORT- PLACE PO'S	13OCT11	15MAR12	20	PUR	G200000010, G2014C0000*, G2014C0010*	89
ROTOR/DRIVE COVERS/HYD SUP - FAB-UNIT 2-FANS 1&2	10NOV11	07JUN12	60	LEI	G2014C0100*	89
ROTOR/DRIVE COVERS/HYD SUP - FAB-UNIT 1-FANS 1&2	10NOV11	21JAN13	60	LEI	G2014C0100*	248
HYDRAULIC BLADE ADJ UNIT - ENG	08SEP11	02FEB12	15	ENA	G201400000*	89

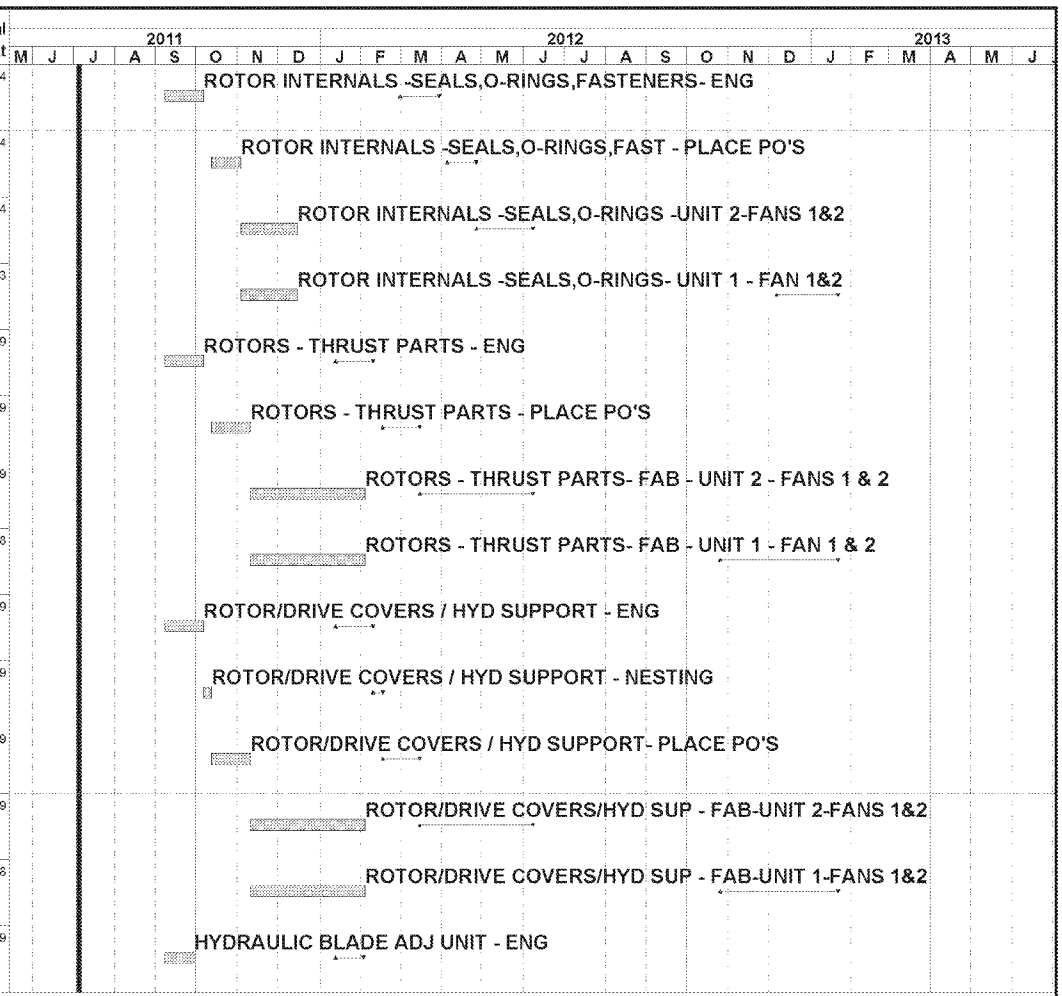

Data Date	06JUL11
Finish Date	31OCT12
Must Finish Date	10MAY13
Run Date	23MAY11 10:13

Early Bar
Late Bar
Progress Bar
Critical Activity

© Primavera Systems, Inc.

PROP - GEN2 TLT-BABCOCK, INC. Sheet 7 of 17
PROPOSAL SCHEDULE
GenOn Conemaugh -- Units 1 and 2
Engineering First
Hold on Procurement / Fab
Proposal #11-01443

Date	Revision	Checke	Approve

Activity Description	Early Start	Late Finish	Orig Dur	Resp.	Predecessors	Total Float
HYDRAULIC BLADE ADJ UNIT -MEDINA CONFIRM TOOLING	29SEP11	23FEB12	5	HYD	G201800000*	99
HYDRAULIC BLADE ADJ UNITS - PLACE P.O.	06OCT11	23FEB12	10	PUR	G200000010, G201800000*, G201800100	89
HYDRAULIC UNIT - FAB -PARTS -UNIT 2 -FAN 1	20OCT11	14JUN12	80	VEN	G201800105*	89
HYDRAULIC UNIT - ASSY IN MEDINA - UNIT 2 - FAN 1	13FEB12	26JUN12	8	HYD	G201800200*	89
HYDRAULIC UNIT - SIX HOUR TEST - UNIT 2 - FAN 1	23FEB12	28JUN12	2	HYD	G201800210*	89
HYDRAULIC UNIT - FAB - PARTS - UNIT 2 - FAN 2	20OCT11	06JUL12	80	VEN	G201800105*	104
HYDRAULIC UNIT - ASSY IN MEDINA - UNIT 2 -FAN 2	27FEB12	18JUL12	8	HYD	G201800210, G201800211*, G201800212	94
HYDRAULIC UNIT - SIX HOUR TEST - UNIT 2 - FAN 2	08MAR12	20JUL12	2	HYD	G201800214*	94
HYDRAULIC UNIT - FAB - PARTS - UNIT 1 - FAN 1	20OCT11	07JAN13	80	VEN	G201800105*	233
HYDRAULIC UNIT - ASSY IN MEDINA - UNIT 1 -FAN 1	12MAR12	17JAN13	8	HYD	G201800105, G201800214, G201800215*, G201800224	213
HYDRAULIC UNIT - SIX HOUR TEST - UNIT 1 -FAN 1	22MAR12	21JAN13	2	HYD	G201800226*	213
HYDRAULIC UNIT - FAB - PARTS - UNIT 1 - FAN 2	20OCT11	28JAN13	80	VEN	G201800105*, G201800224*	248
HYDRAULIC UNIT - ASSY IN MEDINA - UNIT 1 -FAN 2	26MAR12	07FEB13	8	HYD	G201800226, G201800227*, G201800228	218
HYDRAULIC UNIT - SIX HOUR TEST - UNIT 1 -FAN 2	05APR12	11FEB13	2	HYD	G201800230*	218

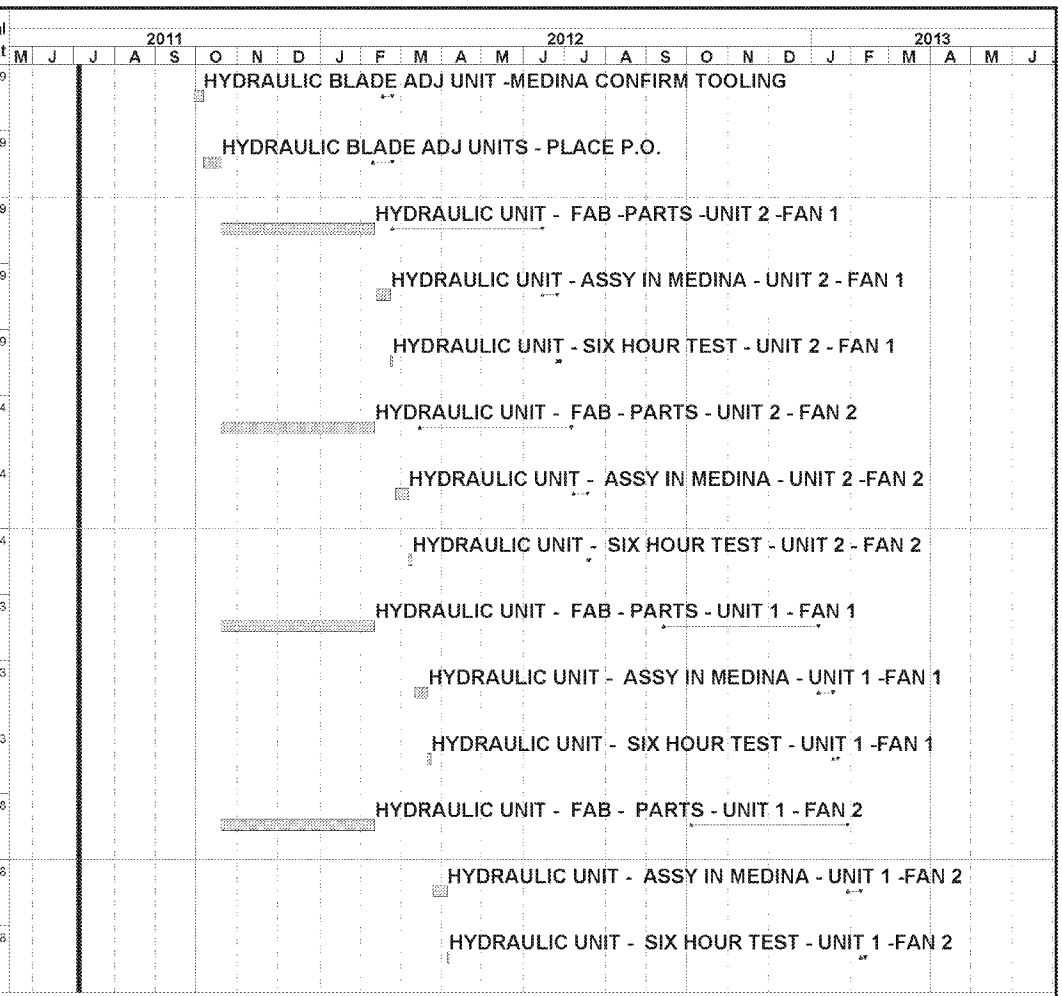

Data Date	06JUL11
Finish Date	31OCT12
Must Finish Date	10MAY13
Run Date	23MAY11 10:13

© Primavera Systems, Inc.

Early Bar
Late Bar
Progress Bar
Critical Activity

PROP - GEN2 TLT-BABCOCK, INC. Sheet 8 of 17
PROPOSAL SCHEDULE
GenOn Conemaugh -- Units 1 and 2
Engineering First
Hold on Procurement / Fab
Proposal #11-01443

Date	Revision	Checke	Approve

Activity Description	Early Start	Late Finish	Orig Dur	Resp.	Predecessors	Total Float
ACTUATOR - ENG	08SEP11	08MAR12	10	ENA	G201400000*	119
ACTUATOR - PLACE P.O.	03OCT11	05APR12	10	PUR	G200000010*, G202200000	122
ACTUATOR - FAB - UNIT 2 - FANS 1 & 2	17OCT11	28JUN12	60	BEC	G202200105*	122
ACTUATOR- FAB - UNIT 1 - FANS 1 & 2	17OCT11	11FEB13	60	BEC	G202200105*	281
CONTROL / IND SHAFT PARTS - ENG	22SEP11	29MAR12	15	ENA	G202200000*	119
CONTROL / IND SHAFT PARTS - PLACE P.O.	20OCT11	19APR12	10	PUR	G200000010, G2022A0000*	119
CONTROL / IND SHAFT PARTS - FAB -UNIT 2 - 1 & 2	03NOV11	28JUN12	50	VEN	G2022A0105*	119
CONTROL / IND SHAFT PARTS - FAB -UNIT 1 - 1 & 2	03NOV11	11FEB13	50	VEN	G2022A0105*	278
COUPLING GUARD - ENG	01DEC11	19APR12	10	ENA	G202500105*	89
COUPLING GUARD - PLACE PO	22DEC11	10MAY12	10	PUR	G200000010, G2024A0000*	89
COUPLING GUARD - FAB - UNIT 2 - 1 & 2	09JAN12	17AUG12	70	VEN	G2024A0100*	89
COUPLING GUARD - FAB - UNIT 1 - 1 & 2	09JAN12	01APR13	70	VEN	G2024A0100*	248
COUPLING W/ INTERMEDIATE SHAFT - ENG	06OCT11	23FEB12	10	ENA	G2014C0000*	89
COUPLING W/ INTERMEDIATE SHAFT - PLACE PO	27OCT11	15MAR12	10	PUR	G200000010, G202500000*	89

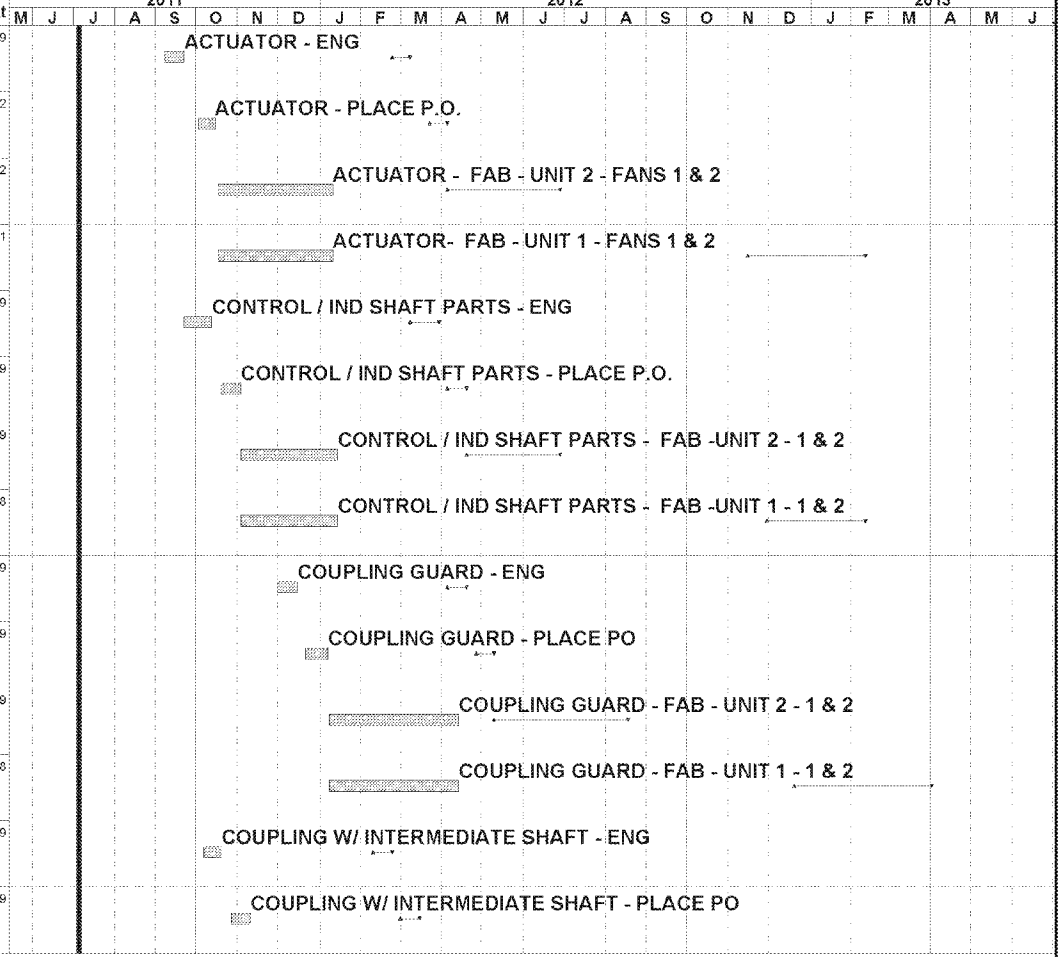

Data Date	06JUL11
Finish Date	31OCT12
Must Finish Date	10MAY13
Run Date	23MAY11 10:13

Early Bar
Late Bar
Progress Bar
Critical Activity

© Primavera Systems, Inc.

PROP - GEN2 TLT-BABCOCK, INC. Sheet 9 of 17
PROPOSAL SCHEDULE
GenOn Conemaugh -- Units 1 and 2
Engineering First
Hold on Procurement / Fab
Proposal #11-01443

Date	Revision	Checke	Approve

Activity Description	Early Start	Late Finish	Orig Dur	Resp.	Predecessors	Total Float
COUPLING W/ INTERMEDIATE SHAFT - VENDOR DRAWING	10NOV11	05APR12	15	VEN	G202500100*	89
COUPLING W/ INTERMEDIATE SHAFT - VENDOR DWG APPR	01DEC11	19APR12	10	ENA	G202500105*	89
COUPLING W/ INTERMEDIATE SHAFT -FAB-UNIT 2 - 1&2	15DEC11	17AUG12	85	VEN	G202500110*	89
COUPLING W/ INTERMEDIATE SHAFT -FAB-UNIT 1 - 1&2	15DEC11	01APR13	85	VEN	G202500110*	248
MOTORS - ENG	17AUG11	05OCT11	10	ENA	G200500000*	26
MOTORS - PLACE PURCHASE ORDER	03OCT11	26OCT11	10	PUR	G200000010*, G202900000	8
MOTORS - VENDOR DRAWING	17OCT11	23NOV11	20	VEN	G202900100*	8
MOTORS - VENDOR DRAWING APPROVAL	14NOV11	21DEC11	20	ENA	G202900105*	8
MOTORS - CUSTOMER DRAWING REVIEW	12DEC11	20JAN12	20	ENA	G202900110*	8
MOTORS - FAB - UNIT 2 - 1 & 2	07NOV11	29OCT12	245	VEN	G202900105, G202900110, G202900115*	8
MOTORS - FAB - UNIT 1 - 1 & 2	07NOV11	01APR13	245	VEN	G202900105, G202900115*	116
LUBE UNITS - ENG	17AUG11	13DEC11	10	ENA	G200500000*	75
LUBE UNITS- PLACE PURCHASE ORDER	03OCT11	05JAN12	10	PUR	G200000010*, G203100000	57
LUBE UNITS - VENDOR DRAWING	17OCT11	16FEB12	30	VEN	G203100100*	57

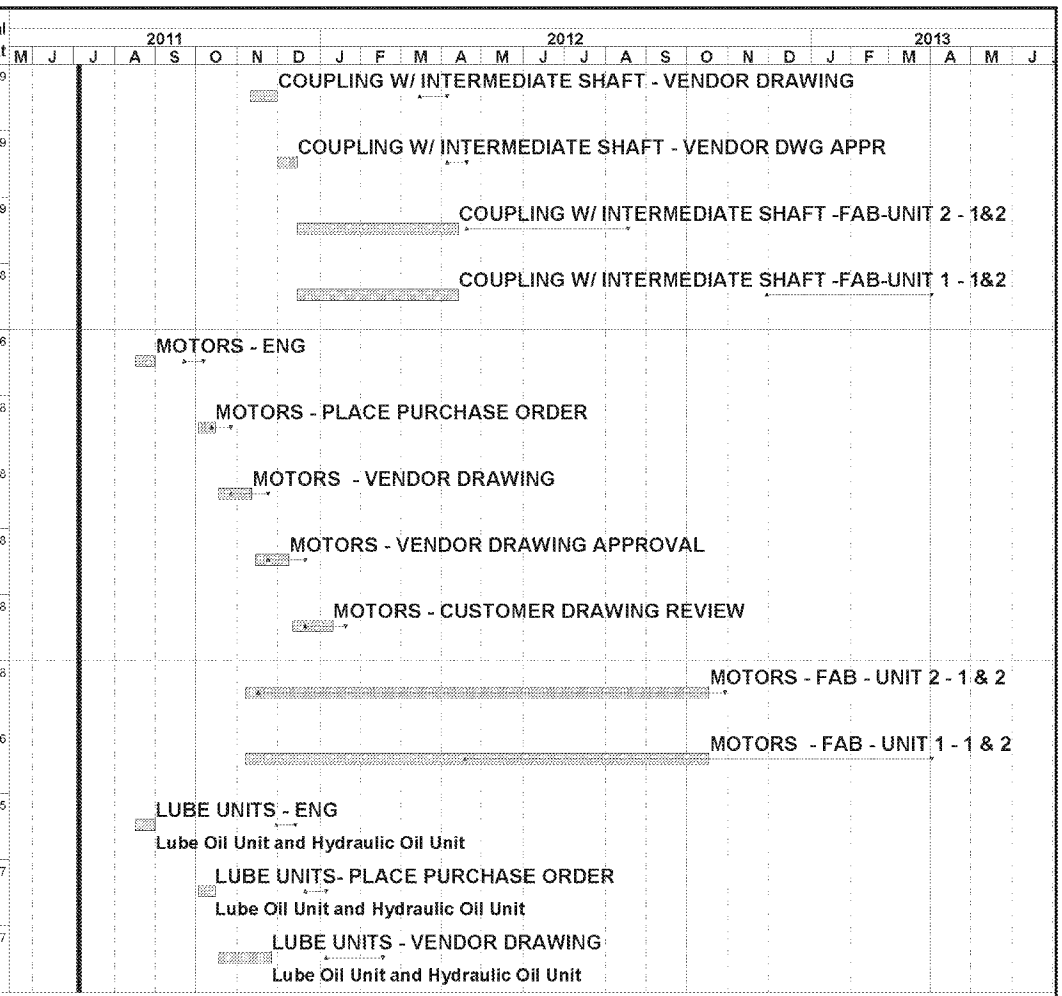

Data Date	06JUL11
Finish Date	31OCT12
Must Finish Date	10MAY13
Run Date	23MAY11 10:13

Early Bar
Late Bar
Progress Bar
Critical Activity

© Primavera Systems, Inc.

PROP - GEN2 TLT-BABCOCK, INC. Sheet 10 of 17
PROPOSAL SCHEDULE
GenOn Conemaugh -- Units 1 and 2
Engineering First
Hold on Procurement / Fab
Proposal #11-01443

Date	Revision	Checke	Approve

Activity Description	Early Start	Late Finish	Orig Dur	Resp.	Predecessors	Total Float
LUBE UNITS - VENDOR DRAWING APPROVAL	28NOV11	15MAR12	20	ENA	G203100105*	57
LUBE UNITS - CUSTOMER DRAWING REVIEW	27DEC11	12APR12	20	ENA	G203100110*	57
LUBE UNITS- FAB - UNIT 2 - 1 & 2	25JAN12	17AUG12	90	VEN	G203100110, G203100112*	57
LUBE UNITS - FAB - UNIT 1 - 1 & 2	25JAN12	01APR13	90	VEN	G203100110, G203100112*	216
COOLING AIR SYSTEM - ENGINEERING	14SEP11	29MAR12	20	ENA	G200500005*	120
COOLING AIR SYSTEM - PLACE PURCHASE ORDER	19OCT11	26APR12	15	PUR	G200000010, G2039A0000*	120
COOLING AIR SYSTEM - FAB - UNIT 2 - 1 & 2	09NOV11	17AUG12	80	VEN	G2039A0100*	120
COOLING AIR SYSTEM - FAB - UNIT 1 - 1 & 2	09NOV11	01APR13	80	VEN	G2039A0100*	279
INSTRUMENTATION - ENG	17AUG11	08MAR12	20	ENA	G200500000*	125
INSTRUMENTATION - CUSTOMER APPROVAL	14SEP11	05APR12	20	ENA	G204100000*	125
INSTRUMENTATION - PLACE PO'S	19OCT11	26APR12	10	PUR	G200000010, G204100050*	125
INSTRUMENTATION - FAB - UNIT 2 - 1 & 2	02NOV11	28JUN12	45	VEN	G204100100*	125
INSTRUMENTATION - FAB - UNIT 1 - 1 & 2	02NOV11	11FEB13	45	VEN	G204100100*	284

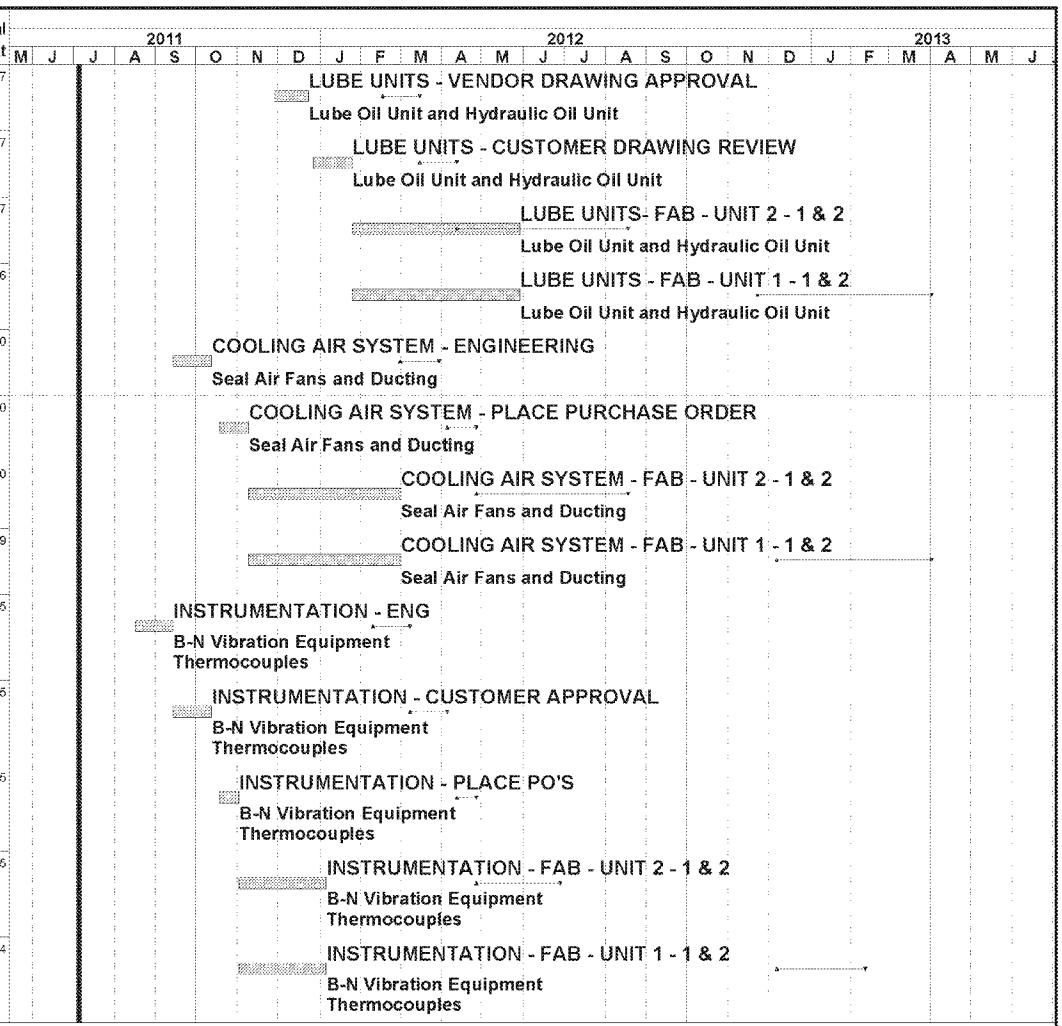

Data Date	06JUL11
Finish Date	31OCT12
Must Finish Date	10MAY13
Run Date	23MAY11 10:13

Early Bar
Late Bar
Progress Bar
Critical Activity

© Primavera Systems, Inc.

PROP - GEN2 TLT-BABCOCK, INC. Sheet 11 of 17
PROPOSAL SCHEDULE
GenOn Conemaugh -- Units 1 and 2
Engineering First
Hold on Procurement / Fab
Proposal #11-01443

Date	Revision	Checke	Approve

Activity Description	Early Start	Late Finish	Orig Dur	Resp.	Predecessors	Total Float
STALL / MONITOR SYSTEM - ENG	17AUG11	05APR12	20	ENG	G200500000*	145
STALL / MONITOR SYSTEM - CUSTOMER APPROVAL	14SEP11	03MAY12	20	ENG	G2041A0000*	145
STALL / MONITOR SYSTEM - PLACE PO'S	19OCT11	24MAY12	10	PUR	G200000010, G2041A0005*	145
STALL / MONITOR SYSTEM - FAB - UNIT 2 - 1 & 2	02NOV11	17AUG12	60	VEN	G2041A0010*	145
STALL / MONITOR SYSTEM - FAB - UNIT 1 - 1 & 2	02NOV11	01APR13	60	VEN	G2041A0010*	304
HOUSING - ENGINEERING	17AUG11	29NOV11	40	ENA	G200500000*	35
HOUSING - CUSTOMER DRAWING REVIEW	12OCT11	28DEC11	20	ENA	G205100000*	35
HOUSING - NESTING	09NOV11	05JAN12	5	ENA	G205100000, G205100005*	35
HOUSING - PLACE PURCHASE ORDER	16NOV11	19JAN12	10	PUR	G200000010, G200650000, G205100000, G205100010*	35
HOUSING - VENDOR FAB - UNIT 2 - FAN 1	30NOV11	21JUN12	110	LEI	G205100100*	35
HOUSING - VENDOR FAB - UNIT 2 - FAN 2	29DEC11	20JUL12	110	LEI	G205100100, G205100200*	35
HOUSING - VENDOR FAB - UNIT 1 - FAN 1	09MAR12	04FEB13	110	LEI	G205100100, G205100201*	124
HOUSING - VENDOR FAB - UNIT 1 - FAN 2	06APR12	04MAR13	110	LEI	G205100100, G205100208*	124
INLET BOX - ENGINEERING	17AUG11	25OCT11	40	ENA	G200500000*	10

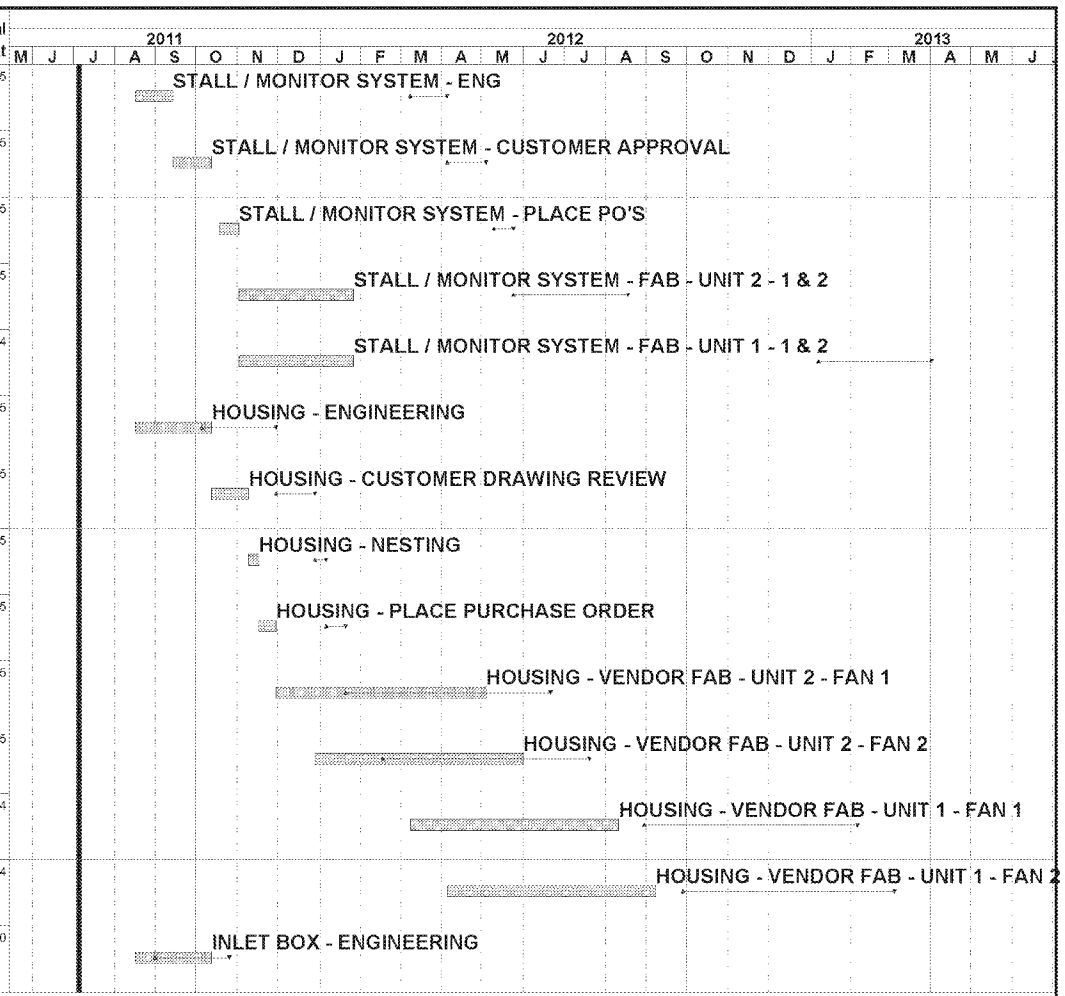

Data Date	06JUL11
Finish Date	31OCT12
Must Finish Date	10MAY13
Run Date	23MAY11 10:13

Early Bar
Late Bar
Progress Bar
Critical Activity

© Primavera Systems, Inc.

PROP - GEN2 TLT-BABCOCK, INC. Sheet 12 of 17
PROPOSAL SCHEDULE
GenOn Conemaugh -- Units 1 and 2
Engineering First
Hold on Procurement / Fab
Proposal #11-01443

Date	Revision	Checke	Approve

Activity Description	Early Start	Late Finish	Orig Dur	Resp.	Predecessors	Total Float
INLET BOX - CUSTOMER DRAWING REVIEW	12OCT11	22NOV11	20	ENA	G2052A0000*	10
INLET BOX - PLACE P.O.	09NOV11	06DEC11	10	PUR	G200000010, G200650000, G2052A0000, G2052A0005*	10
INLET BOX - VENDOR FAB - UNIT 2 - 1 & 2	23NOV11	17AUG12	180	VEN	G2052A0100*	10
INLET BOX - VENDOR FAB - UNIT 1- 1 & 2	21DEC11	01APR13	180	VEN	G2052A0100, G2052A0220*	149
BELLMOUTH/NOSE - ENGINEERING	17AUG11	25OCT11	40	ENA	G200500000*	10
BELLMOUTH - CUSTOMER DRAWING REVIEW	12OCT11	22NOV11	20	ENA	G2052B0000*	10
BELLMOUTH/NOSE - PLACE PO	09NOV11	06DEC11	10	PUR	G200000010, G2052B0000, G2052B0005*	10
BELLMOUTH/NOSE - VENDOR FAB - UNIT 2 - 1 & 2	23NOV11	17AUG12	180	VEN	G2052B0100*	10
BELLMOUTH/NOSE - VENDOR FAB - UNIT 1 - 1 & 2	21DEC11	01APR13	180	VEN	G2052B0100, G2052B0202*	149
SHAFT COVER - ENG	17AUG11	15NOV11	15	ENA	G200500000*	50
SHAFT COVER - PLACE P.O.	03OCT11	06DEC11	10	PUR	G200000010*, G205300000	37
SHAFT COVER - VENDOR FAB - UNIT 2 - 1 & 2	17OCT11	17AUG12	180	VEN	G205300100*	37
SHAFT COVER - VENDOR FAB - UNIT 1 - 1 & 2	14NOV11	01APR13	180	VEN	G205300100, G205300220*	176
FAN DIFFUSER - ENG	17AUG11	25OCT11	20	ENA	G200500000*	30

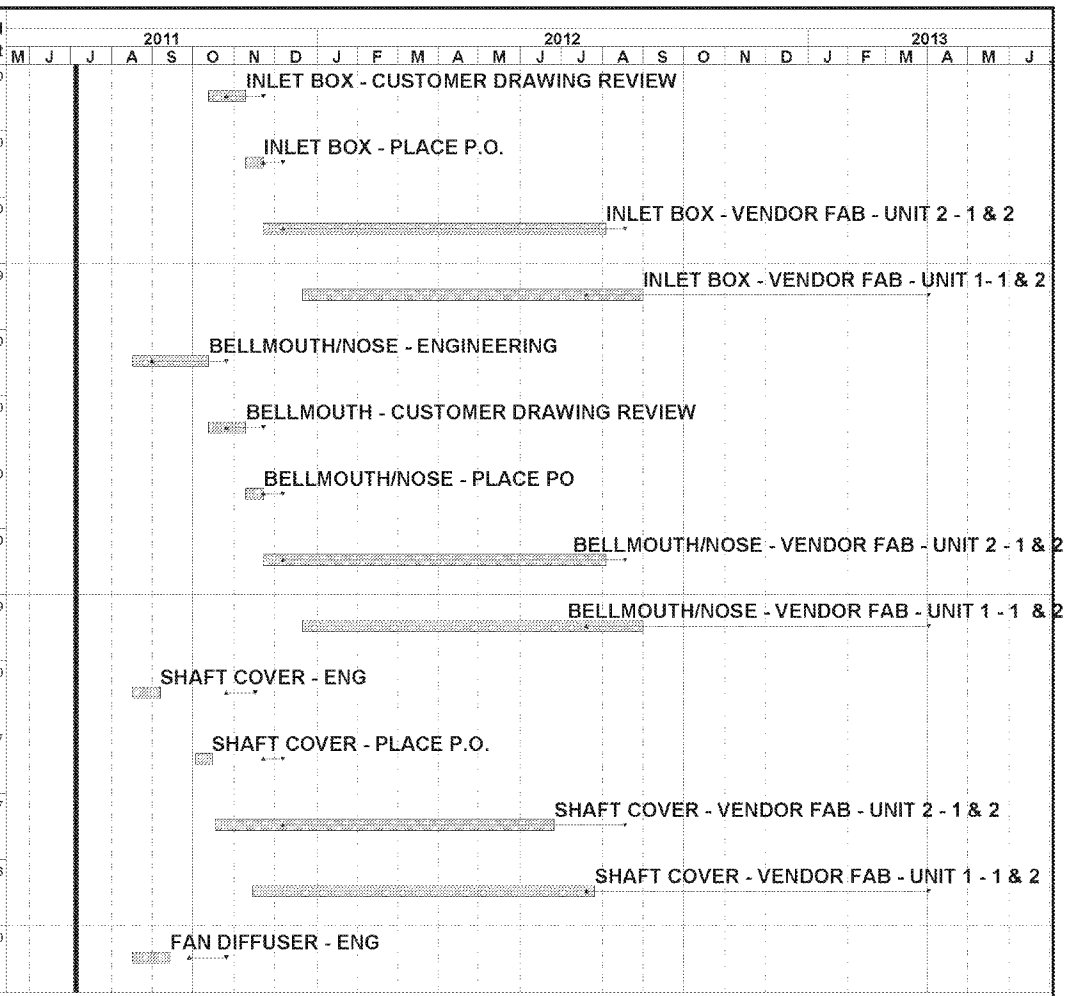

Data Date	06JUL11
Finish Date	31OCT12
Must Finish Date	10MAY13
Run Date	23MAY11 10:13

Early Bar
Late Bar
Progress Bar
Critical Activity

© Primavera Systems, Inc.

PROP - GEN2 TLT-BABCOCK, INC. Sheet 13 of 17
PROPOSAL SCHEDULE
GenOn Conemaugh -- Units 1 and 2
Engineering First
Hold on Procurement / Fab
Proposal #11-01443

Date	Revision	Checke	Approve

Activity Description	Early Start	Late Finish	Orig Dur	Resp.	Predecessors	Total Float
FAN DIFFUSER - CUSTOMER DRAWING REVIEW	14SEP11	22NOV11	20	ENA	G205500000*	30
FAN DIFFUSER - PLACE PO	12OCT11	06DEC11	10	PUR	G200000010, G205500000, G205500005*	30
FAN DIFFUSER - VENDOR FAB - UNIT 2 - 1 & 2	26OCT11	17AUG12	180	VEN	G205500100*	30
FAN DIFFUSER - VENDOR FAB - UNIT 1 - 1 & 2	23NOV11	01APR13	180	VEN	G205500100, G205500220*	169
LIFT FRAME - ENG	17AUG11	25OCT11	20	ENA	G200500000*	30
LIFT FRAME - CUSTOMER DRAWING REVIEW	14SEP11	22NOV11	20	ENA	G2055B0000*	30
LIFT FRAME - PLACE PO	12OCT11	06DEC11	10	PUR	G2055B0000, G2055B0005*	30
LIFT FRAME - VENDOR FAB - UNIT 2 - 1 & 2	26OCT11	17AUG12	180	VEN	G2055B0100*	30
LIFT FRAME - VENDOR FAB - UNIT 1 - 1 & 2	23NOV11	01APR13	180	VEN	G2055B0100, G2055B0220*	169
TRANSITIONS - ENG	17AUG11	16NOV11	20	ENA	G200500000*	45
TRANSITIONS - PLACE PO	03OCT11	06DEC11	10	PUR	G200000010*, G205800000	37
TRANSITIONS - VENDOR FAB - UNIT 2 - 1 & 2	17OCT11	17AUG12	180	VEN	G205800100*	37
TRANSITIONS - VENDOR FAB - UNIT 1 - 1 & 2	14NOV11	01APR13	180	VEN	G205800100, G205800220*	176
SHAFT BRAKE - ENG	17AUG11	05APR12	20	ENA	G200500000*	145

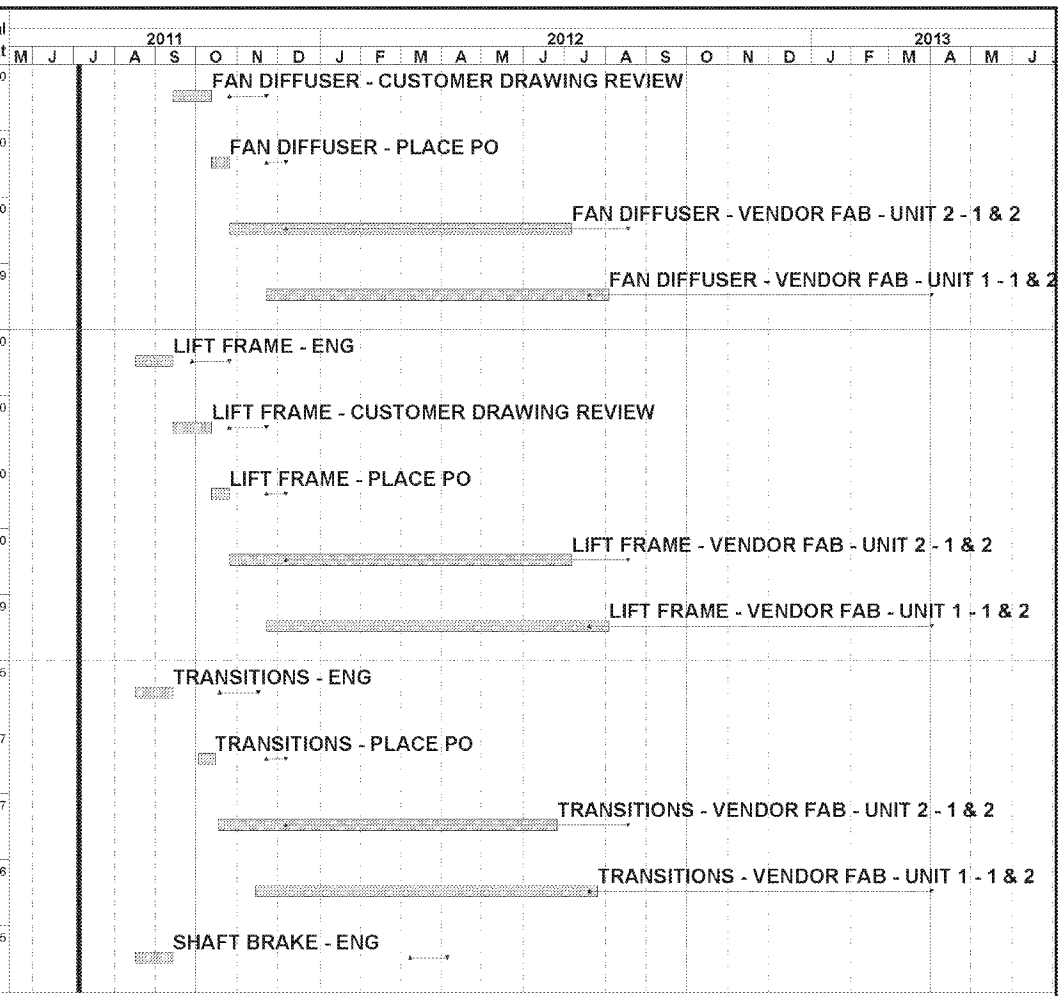

Data Date	06JUL11
Finish Date	31OCT12
Must Finish Date	10MAY13
Run Date	23MAY11 10:13

Early Bar
Late Bar
Progress Bar
Critical Activity

© Primavera Systems, Inc.

PROP - GEN2 TLT-BABCOCK, INC. Sheet 14 of 17
PROPOSAL SCHEDULE
GenOn Conemaugh -- Units 1 and 2
Engineering First
Hold on Procurement / Fab
Proposal #11-01443

Date	Revision	Checke	Approve

Activity Description	Early Start	Late Finish	Orig Dur	Resp.	Predecessors	Total Float
SHAFT BRAKE - PLACE P.O.	03OCT11	10MAY12	20	PUR	G200000010*, G206200110	137
SHAFT BRAKE - VENDOR FAB -UNIT 2 -1 & 2	31OCT11	17AUG12	70	VEN	G206200120*	137
SHAFT BRAKE - VENDOR FAB -UNIT 1 -1 & 2	31OCT11	01APR13	70	VEN	G206200120*	296
ANCHOR BOLT TEMPLATE - ENG	17AUG11	19APR12	20	ENA	G200500000*	155
ANCHOR BOLT TEMPLATE - PLACE P.O.	03OCT11	24MAY12	20	PUR	G200000010*, G206900110	147
ANCHOR BOLT TEMPLATE - VENDOR FAB -UNIT 2 -1 & 2	31OCT11	17AUG12	60	VEN	G206900120*	147
ANCHOR BOLT TEMPLATE - VENDOR FAB -UNIT 1 -1 & 2	31OCT11	01APR13	60	VEN	G206900120*	306
INSULATION & LAGGING - ENG	17AUG11	19APR12	20	ENA	G200500000*	155
INSULATION & LAGGING - PLACE P.O.	03OCT11	24MAY12	20	PUR	G200000010*, G207100110	147
INSULATION & LAGGING - VENDOR FAB -UNIT 2 -1 & 2	31OCT11	17AUG12	60	VEN	G207100120*	147
INSULATION & LAGGING - VENDOR FAB -UNIT 1 -1 & 2	31OCT11	01APR13	60	VEN	G207100120*	306
EXPANSION JOINTS - ENG	17AUG11	09FEB12	10	ENA	G200500000*	115
EXPANSION JOINTS - PLACE PURCHASE ORDER	03OCT11	01MAR12	10	PUR	G200000010*, G207700000	97
EXPANSION JOINTS - VENDOR DRAWING	17OCT11	12APR12	30	VEN	G207700100*	97

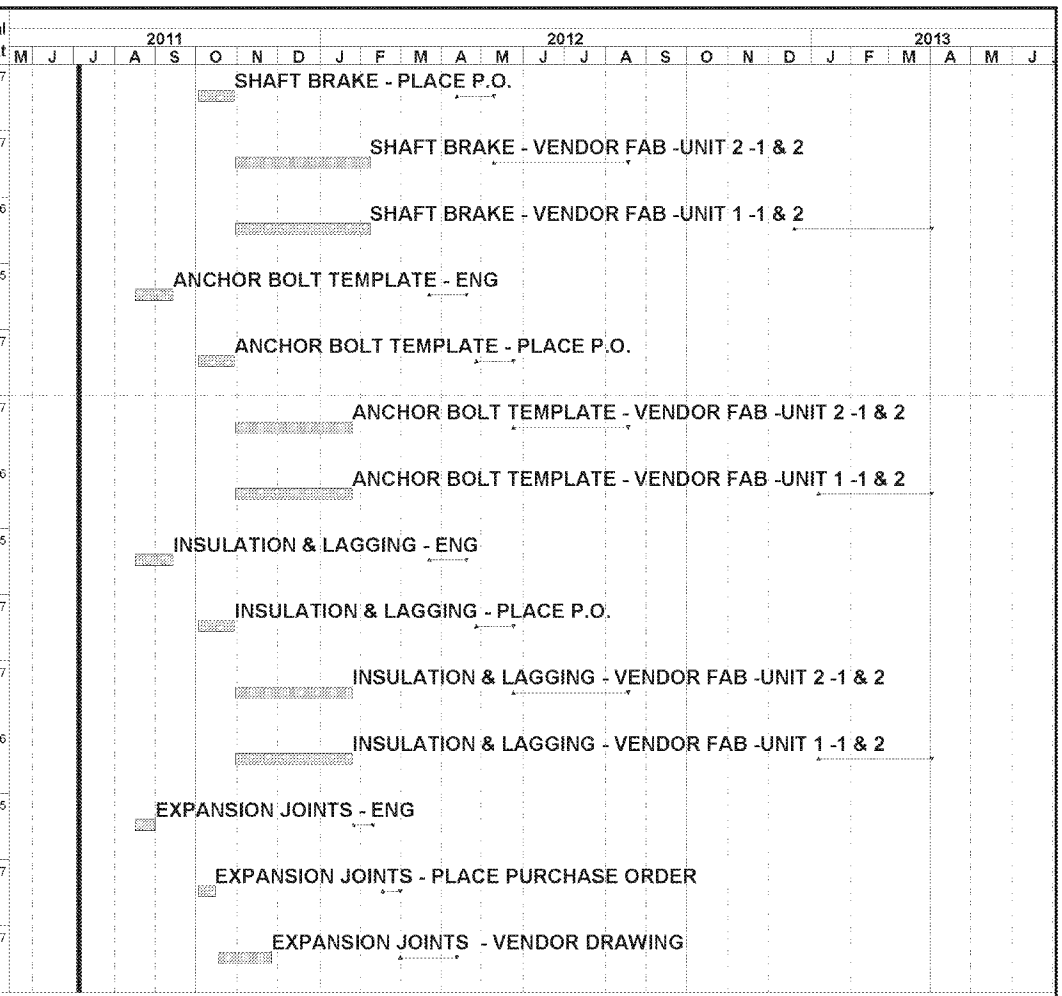

Data Date	06JUL11
Finish Date	31OCT12
Must Finish Date	10MAY13
Run Date	23MAY11 10:13

Early Bar
Late Bar
Progress Bar
Critical Activity

© Primavera Systems, Inc.

PROP - GEN2 TLT-BABCOCK, INC. Sheet 15 of 17
PROPOSAL SCHEDULE
GenOn Conemaugh -- Units 1 and 2
Engineering First
Hold on Procurement / Fab
Proposal #11-01443

Date	Revision	Checke	Approve

Activity Description	Early Start	Late Finish	Orig Dur	Resp.	Predecessors	Total Float
EXPANSION JOINTS - VENDOR DRAWING APPROVAL	28NOV11	10MAY12	20	ENA	G207700105*	97
EXPANSION JOINTS - FAB - UNIT 2 - 1 & 2	27DEC11	17AUG12	70	VEN	G207700105, G207700110*	97
EXPANSION JOINTS - FAB - UNIT 1 - 1 & 2	27DEC11	01APR13	70	VEN	G207700105, G207700110*	256
FLEXIBLE JOINT - ENG	12OCT11	19APR12	15	ENA	G205100000*	120
FLEXIBLE JOINTS - PLACE PURCHASE ORDER	09NOV11	21JUN12	10	PUR	G200000010, G207800001*	150
FLEXIBLE JOINTS - FABRICATION - UNIT 2 - 1 & 2	23NOV11	17AUG12	40	VEN	G207800100*	150
FLEXIBLE JOINTS - FABRICATION - UNIT 1 - 1 & 2	23NOV11	01APR13	40	VEN	G207800100*	309
FIELD ASSY DRAWING	02NOV11	17MAY12	20	ENA	G200500000, G201000025, G205100000, G205500000,	120
FIELD ASSY PARTS - PLACE P.O.	07DEC11	07JUN12	10	ENA	G200000010, G209000005*	120
FIELD ASSY PARTS - VENDOR FAB	21DEC11	03AUG12	40	ENA	G209000007*	120
EOM MANUALS	01DEC11	03AUG12	20	ENA	G201000025, G202500105*, G203100105, G209000005	154
SHIPPING SKIDS - ENG	20OCT11	31MAY12	15	ENA	G201000025, G201000125*	144
SHIPPING SKIDS - PLACE PURCHASE ORDER	17NOV11	21JUN12	10	PUR	G200000010, G209400100*	144
SHIPPING SKIDS - FABRICATION - UNIT 2 - 1 & 2	01DEC11	03AUG12	30	VEN	G209400125*	144

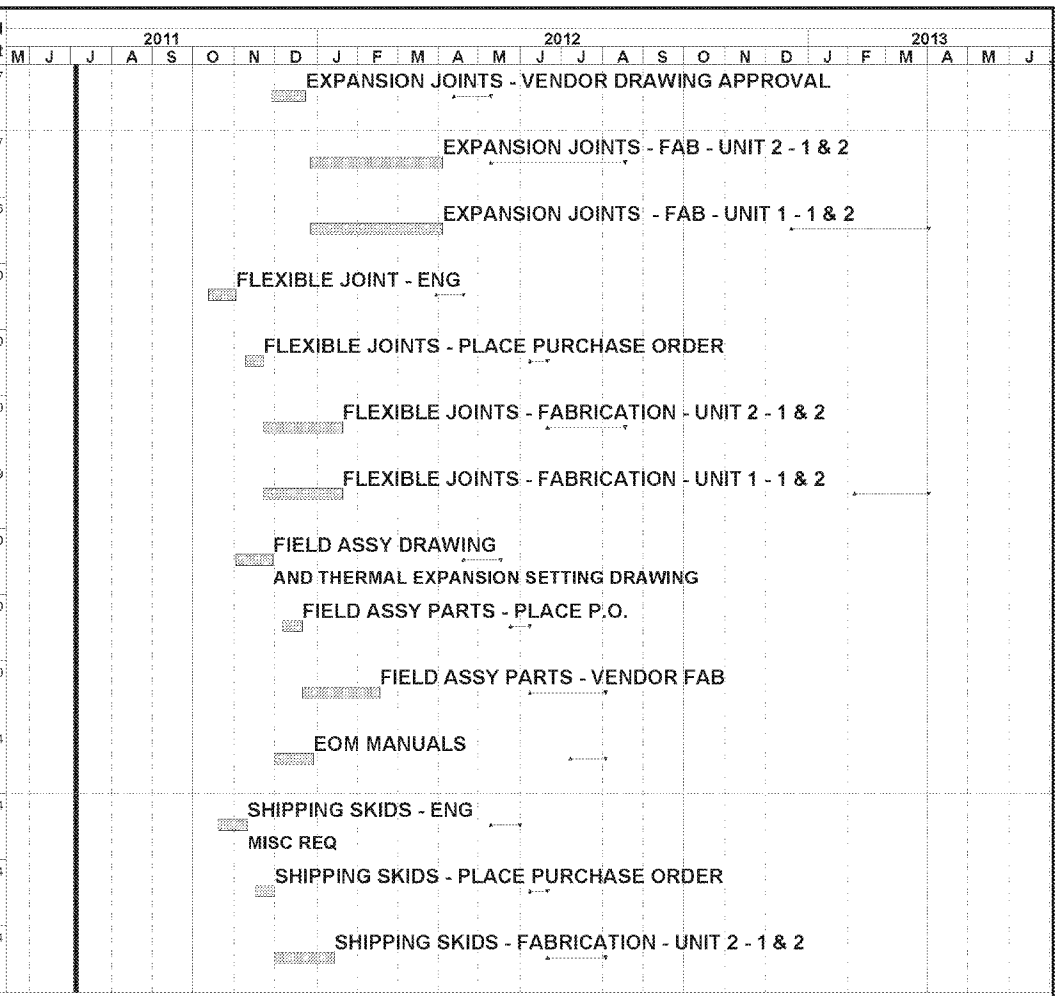

Data Date	06JUL11
Finish Date	31OCT12
Must Finish Date	10MAY13
Run Date	23MAY11 10:13

Early Bar
Late Bar
Progress Bar
Critical Activity

© Primavera Systems, Inc.

PROP - GEN2 TLT-BABCOCK, INC. Sheet 16 of 17
PROPOSAL SCHEDULE
GenOn Conemaugh -- Units 1 and 2
Engineering First
Hold on Procurement / Fab
Proposal #11-01443

Date	Revision	Checke	Approve

Activity Description	Early Start	Late Finish	Orig Dur	Resp.	Predecessors	Total Float
SHIPPING SKIDS - FABRICATION - UNIT 1 - 1 & 2	01DEC11	18MAR13	30	VEN	G209400125*	303
SHIP FANS FROM MEDINA - UNIT #2	19JUL12	31AUG12*	10	SHP	G201000205, G201000211, G201000213, G201000216,	22
SHIP FROM VENDORS - UNIT #2	06AUG12	31AUG12*	10	SHV	G2024A0100, G2024A0200, G203100110, G203100200,	10
SHIP FROM MOTOR VENDOR - UNIT #2	18OCT12	12NOV12*	10	SHV	G202900200*	8
SHIP FANS FROM MEDINA - UNIT #1	08OCT12	15APR13*	10	SHP	G201000200, G201000246, G201000248, G201000252,	124
SHIP FROM VENDORS - UNIT #1	03SEP12	15APR13*	10	SHV	G2024A0100, G2024A0203, G203100110, G203100203,	149
SHIP FROM MOTOR VENDOR - UNIT #1	18OCT12	15APR13*	10	SHV	G202900203*	116

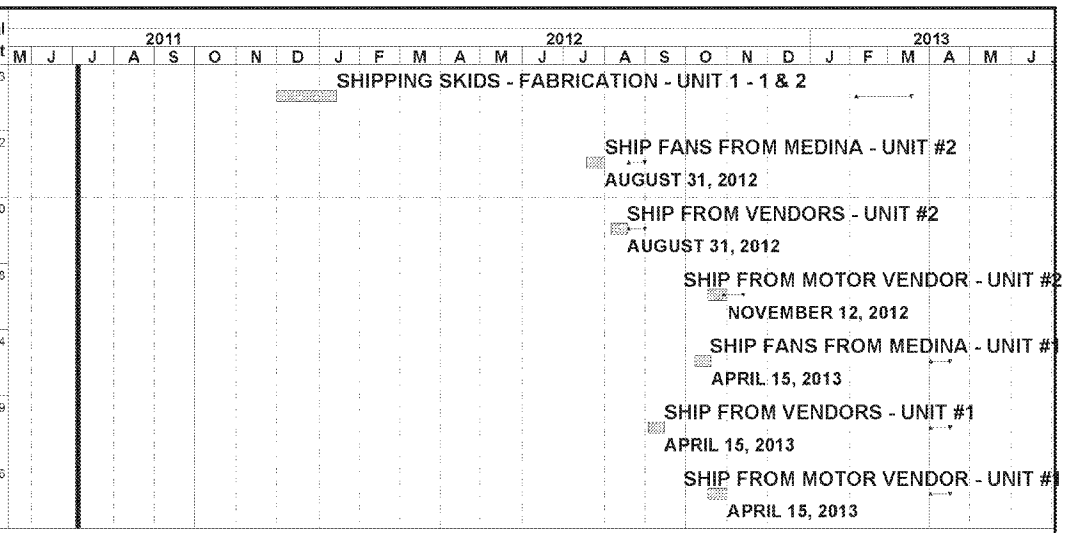

Data Date	06JUL11
Finish Date	31OCT12
Must Finish Date	10MAY13
Run Date	23MAY11 10:13

© Primavera Systems, Inc.

Early Bar
Late Bar
Progress Bar
Critical Activity

PROP - GEN2 TLT-BABCOCK, INC. Sheet 17 of 17
PROPOSAL SCHEDULE
GenOn Conemaugh -- Units 1 and 2
Engineering First
Hold on Procurement / Fab
Proposal #11-01443

Date	Revision	Checke	Approve

Question 1

NPPDRH114_0002182
ED_005798_00000461-00124

REVISIONS			
REVISION NO.	DESCRIPTION	DATE	APPROVAL

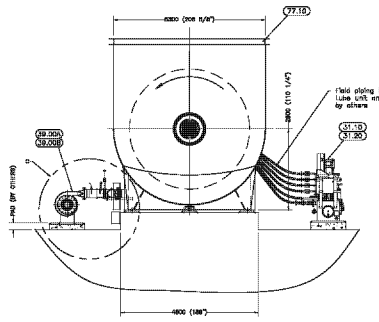

SECTION VIEW A–A
(SAME MOTOR SEISMIC FOR D-ARM)

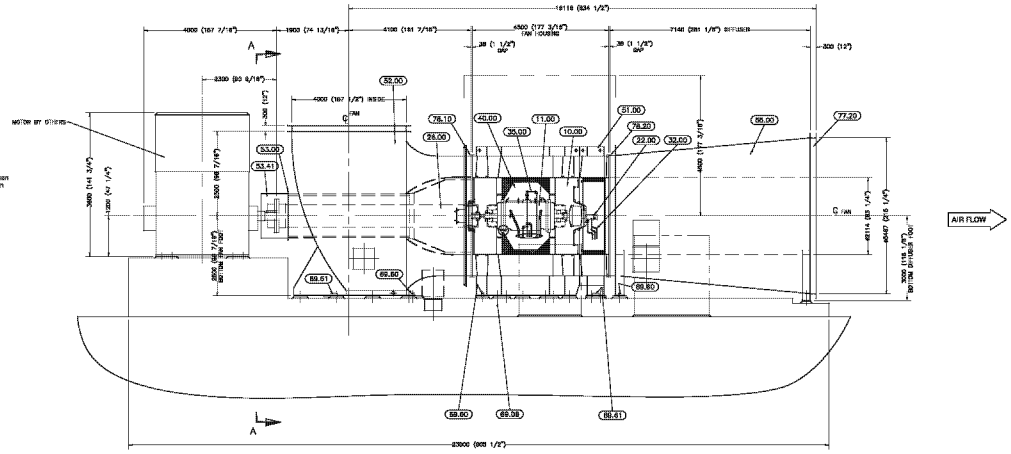

ELEVATION
(COOLING AIR ASSY AND HYDRAULIC & LUBE UNITS REMOVED FOR CLARITY)

BILL OF MATERIALS						
PART NUMBER	MK. NO.	QTY.	U/M	DESCRIPTION	DRAWING /MAT'L	WT. (Lb)
	82.00	1	EA.	I.D. FAN ARRANGEMENT CONSISTING OF:		
	10.00	1	EA.	ROTOR ASSEMBLY		47000
	11.00	1	EA.	COMPACT ROLLER BEARING ASSM		
	52.00	1	EA.	CONTROL & MOUNTING SHAFT ASSEMBLY		
	26.00	1	EA.	INTERMEDIATE SHAFT & COUPLING		
	31.10	1	EA.	HYDRAULIC OIL SYSTEM		
	31.30	1	EA.	OIL LUBRICATION SYSTEM		
	32.00	1	EA.	ARRANGEMENT OF OIL LINES FOR HYDRAULIC UNIT		
	35.00	1	EA.	ARRANGEMENT OF OIL LINES FOR BRG LUBRICATION		
	39.00	1	EA.	COOLING AIR ASSEMBLY		
	39.03	2	EA.	FLOW SWITCH "FLOWSIM" SSC		
	40.00	1	EA.	INSTRUMENTATION ASSEMBLY		
	51.00	1	EA.	FAN HOUSING ASSEMBLY		71480
	52.00	1	EA.	BELLMOUTH, INLET BOX & MOBIC FAIRING ASSEMBLY		23684
	53.00	1	EA.	INTERMEDIATE SHAFT COVER ASSEMBLY		
	53.41	1	EA.	COUPLING GUARD		
	56.00	1	EA.	DIFFUSER ASSEMBLY		23684
	69.01	30	EA.	WASHER-BELVILLE, 4" O.D. X 2.062" I.D. X 0.312 THK.		
	69.42	3	EA.	ANCHOR BEARING PLATE – DOUBLE ANCHOR		
	69.43	3	EA.	ANCHOR BEARING PLATE – DOUBLE ANCHOR		
	69.58	16	EA.	ANCHOR BEARING PLATE – SINGLE ANCHOR		
	69.60	3	EA.	NON EXPANSION PIN TYPE ANCHOR BEARING PLATE		
	69.61	3	EA.	GUIDE TYPE ANCHOR BEARING PLATE		
	77.10	1	EA.	INLET EXPANSION JOINT		
	77.30	1	EA.	OUTLET EXPANSION JOINT		
	76.10	1	EA.	FLEXIBLE JOINT (BELLMOUTH TO HOUSING)		
	76.30	1	EA.	FLEXIBLE JOINT (HOUSING TO DIFFUSER)		

NOTES:

1. FOR GENERAL INSTALLATION SEQUENCE, ALIGNMENT AND SHIMMING INSTRUCTIONS, SEE I.O&M MANUAL.
2. SEE COMPONENT DRAWINGS FOR FASTENERS NOT SHOWN.
3. ALIGN THE FAN HOUSING PER THE COMPONENT ALIGNMENT DWG. ALIGN ALL OTHER COMPONENTS SO MAXIMUM SHIMS FROM INTO AND OUT OF THE ARRANGEMENT ARE MINIMAL.
4. ROTOR SHELL AND COVER MATERIAL: ASTM A588.
5. REMOVE SHIPPING RESTRAINTS, AS NECESSARY.
6. MK-Nos: 10.00, 11.00, 22.00, 32.00, 35.00, AND 40.00 ARE SHOP-INSTALLED.

REFERENCE DRAWING:
GENERAL ARRANGEMENT AND FOUNDATION DWG. 430205E

PRELIMINARY
WORK IN PROGRESS

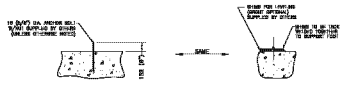

FOUNDATION PREPARATION
FOR AIRFLOW CONTROL
SECTION C-C

FINAL FOUNDATION
SECTION C-C

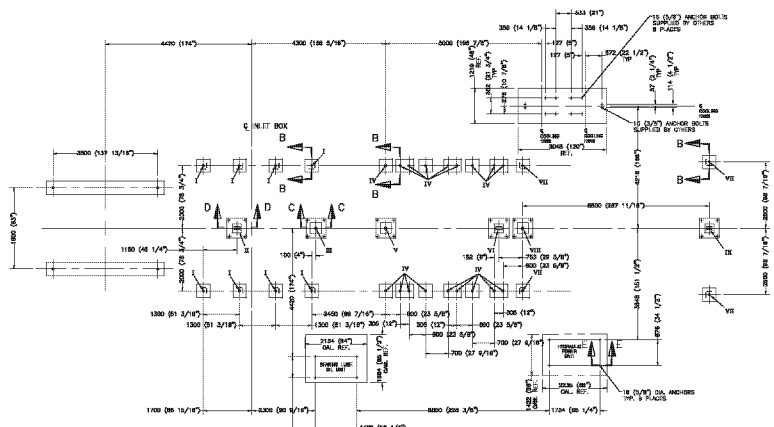

FOUNDATION PLAN

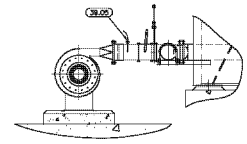

DETAIL C
2:1

FOUNDATION PREPARATION
FOR FAN SECTION A-A
FINAL FOUNDATION
SECTION A-A

FOUNDATION PREPARATION
FOR FAN SECTION B-B
TYPICAL FOR PEDESTAL & FLOW EXPANSION BLOCK POINTS

FINAL FOUNDATION
SECTION B-B

FOUNDATION PREPARATION
TYPICAL FOR SECTION C-C
EXPANSION BLOCK POINTS

FINAL FOUNDATION
SECTION C-C

THIS IS A CAD DRAWING
DO NOT REVISE MANUALLY

TLT–BABCOCK, INC.

DRAWN BY:
CHK'D BY:
PASSED BY:
APPVD. BY:
COMP. No. DATE:

SAF42.5/21.2–2
I.D. FAN

PART NO.:

THIS DRAWING IS THE PROPERTY OF: TLT–BABCOCK, INC. AND IS HERE SUBMITTED FOR INFORMATION ONLY. THIS DRAWING MAY NOT BE REPRODUCED OR DISCLOSED TO OTHERS WITHOUT WRITTEN PERMISSION. THIS DRAWING, AND ALL OTHER DRAWINGS, DATA AND INFORMATION IS THE PROPERTY OF TLT–BABCOCK, INC. AND WILL BE RETURNED UPON REQUEST.

DWG. No. PROPOSAL E
REV

DO NOT SCALE–USE DIMENSIONS ONLY SCALE: NTS

DATE STARTED:

TLT-Babcock, Inc.
260 Springside Drive.
Akron, Ohio 44333

TLT-BABCOCK

TEL: (330) 867-8540
FAX: (330)-869-4819
www.tltbabcock.com

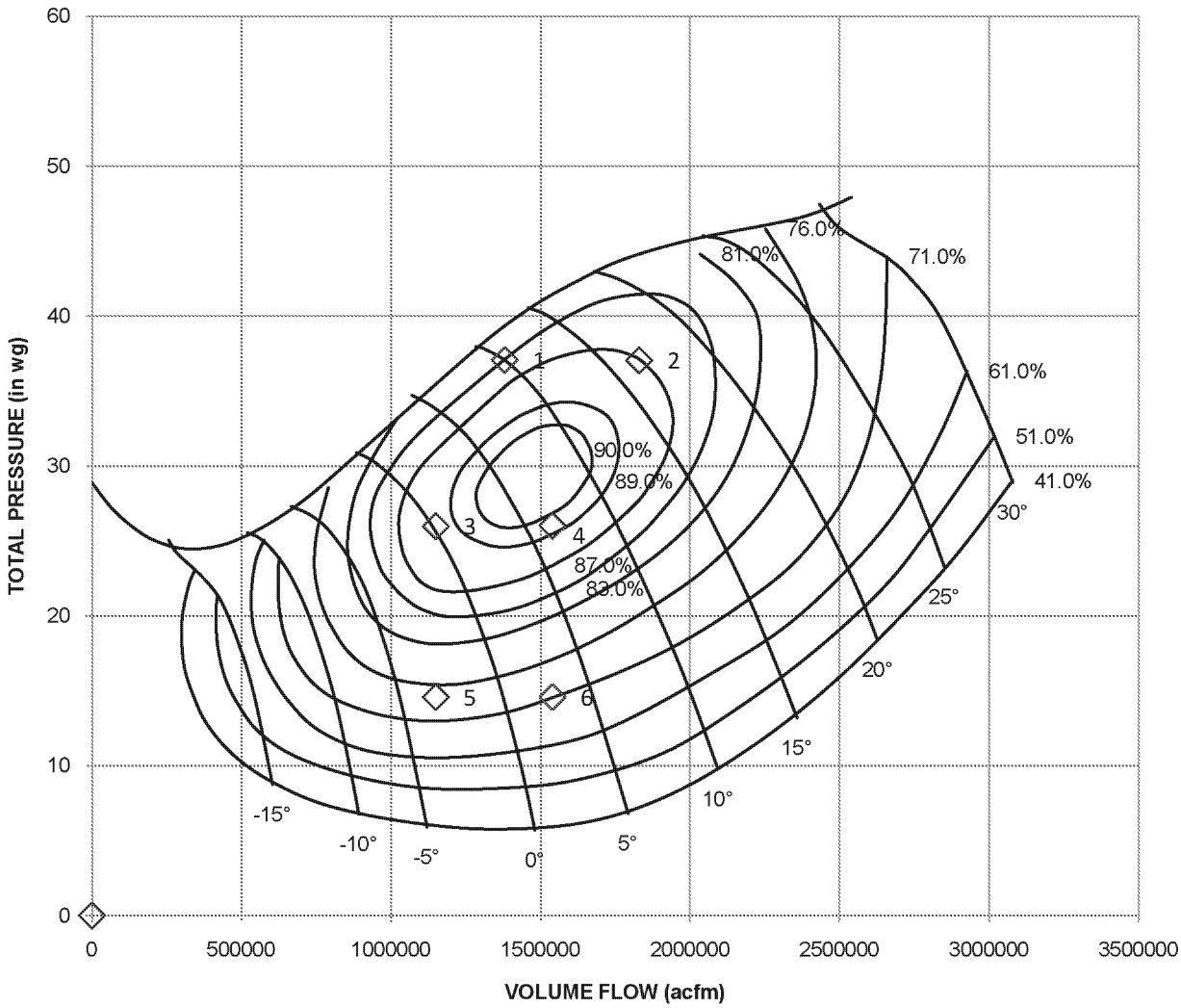

POINT	VOLUME FLOW (acfm)	INLET PRESSURE (in wg)	STATIC PRES. RISE (in wg)	TOTAL PRES. RISE (in wg)	DENSITY (lb/ft3)	TEMP (deg F)	TOTAL EFFICIENCY (%)	POWER (hp)	SPEED (rpm)
1	1,380,000	-21.00	36.00	36.00	0.0476	330	83	9110	710
2	1,830,000	-21.00	36.00	36.00	0.0476	330	87	11525	710
3	1,150,000	-15.00	26.00	26.00	0.0490	320	87	5278	710
4	1,540,000	-15.00	26.00	26.00	0.0490	320	89	6910	710
5	1,150,000	-4.00	15.00	15.00	0.0504	320	71	3769	710
6	1,540,000	-4.00	15.00	15.00	0.0504	320	71	5047	710

PROJECT NUMBER:	PROJECT NUMBER	FAN MODEL:	SAF 42.5/21.2-2
CUSTOMER:	Fossil Power (Unit 1)	BLADING:	16NA16+5%
DATE:	07/25/11	REFERENCE:	368

NOTE: Operating points adjusted to a base density of 0.0490 lb/ft3 and an operating speed of 710 rpm.

Data shown is predicted. Performance is only guaranteed as defined in the proposal.

TLT-BABCOCK

SPEED-TORQUE CURVE

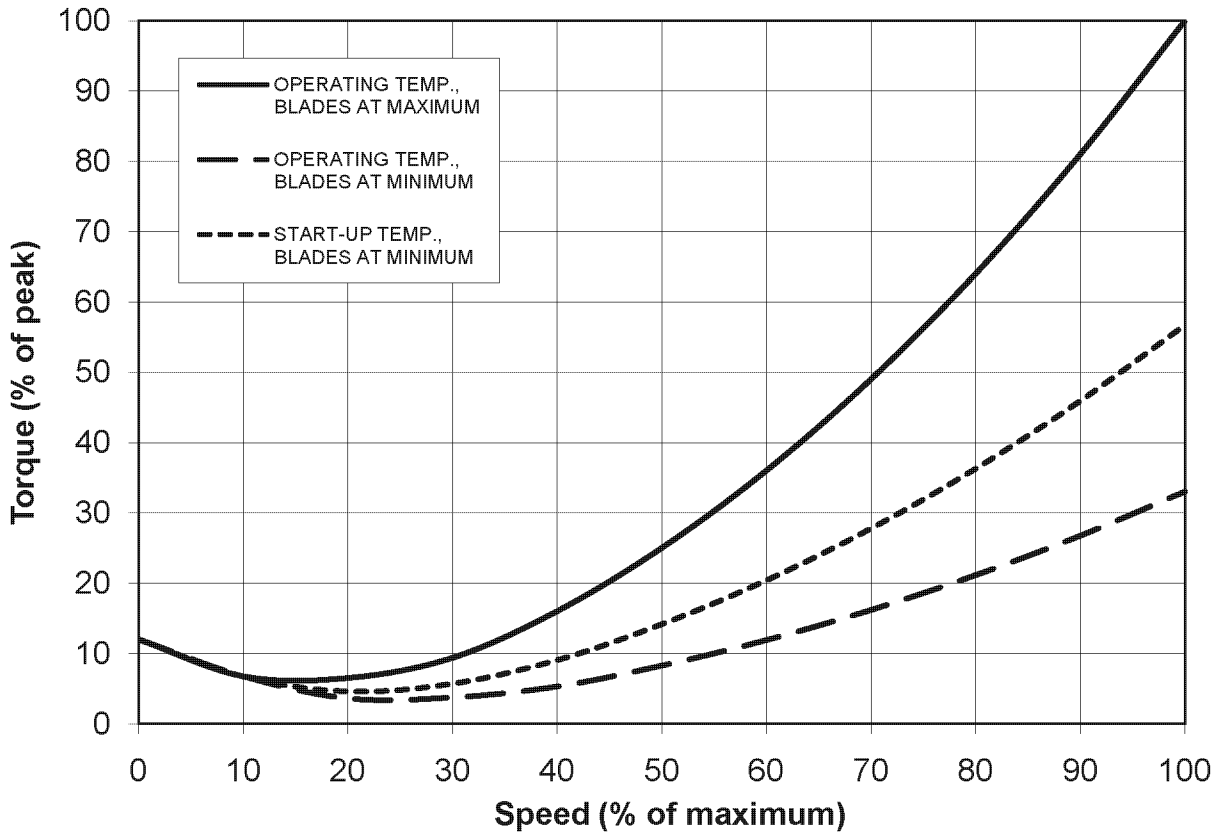

CUSTOMER / PROJECT NAME:	Fossil Power (Unit 1)	
PROJECT NUMBER:	project	
BY:	Pei	
FAN MODEL:	SAF42.5-21.2-2	
MOMENT OF INERTIA:	360,000 lb ft^2	15170.4 kg m^2
FAN OPERATING SPEED:	710 rpm	
ANGLE OF BLADES AT MINIMUM SETTING:	-30 °	
OPERATING GAS TEMPERATURE:	330.0 °F	165.6 °C
OPERATING GAS INLET DENSITY:	0.0476 lb/ft^3	0.7625 kg/m^3
OPERATING PEAK POWER REQUIREMENT, BLADES AT MAXIMUM:	11525 hp	8594 kW
OPERATING PEAK FAN TORQUE, BLADES AT MAXIMUM:	85254 ft lb	115589 N m
OPERATING POWER REQUIREMENT, BLADES AT MINIMUM:	3803 hp	2836 kW
OPERATING FAN TORQUE, BLADES AT MINIMUM:	28134 ft lb	38145 N m
START-UP GAS TEMPERATURE:	0.0 °F	-17.8 °C
START-UP GAS INLET DENSITY:	0.0818 lb/ft^3	1.3099 kg/m^3
START-UP POWER REQUIREMENT, BLADES AT MINIMUM:	6534 hp	4872 kW
START-UP FAN TORQUE, BLADES AT MINIMUM:	48331 ft lb	65529 N m

11-10 r5

TLT-BABCOCK

SOUND ANALYSIS, Version 6.4c

PROJECT NUMBER:	0
CUSTOMER / PROJECT NAME:	Fossil Power (Unit 1)
FAN MODEL:	SAF42.5-21.2-2
VOLUME FLOW RATE:	1540000 acfm
TOTAL PRESSURE:	26 in wg
INLET DENSITY:	0.049 lbm/ft3
TEMPERATURE:	320 °F
FAN POWER:	6910 hp
SPEED:	710 rpm
BLADE PASSING FREQUENCY:	189 Hz
ESTIMATED FAN PULSATION:	3.12 in wg p-p

NOTES:

1. L_W = SOUND POWER (ref: 10^{-12}W), L_P = SOUND PRESSURE (ref: 20×10^{-6} Pa).
2. DUCT AND CASING SOUND PRESSURE LEVELS ARE 1 METER FROM THE SURFACE.
3. BASED ON A DUCTED INLET AND DUCTED OUTLET.
4. RESULTS ARE FOR THE FREE FIELD CONDITION. SOUND LEVEL INCREASES FROM MULTIPLE FANS, OTHER SOUND SOURCES, REVERBERATION OR REFLECTION ARE NOT INCLUDED UNLESS OTHERWISE NOTED.
5. PULSATION IS GIVEN FOR BLADE PASSING FREQUENCY NEAR TERMINATION FLANGES. DUCTWORK DESIGN MAY AFFECT MAGNITUDE.

TWO STAGE AXIAL UNATTENUATED FAN NOISE LEVELS:

TOTAL SOUND POWER LEVEL OF THE FAN (for reference only)

	31.5 Hz	63 Hz	125 Hz	250 Hz	500 Hz	1000 Hz	2000 Hz	4000 Hz	8000 Hz	16000 Hz	TOTAL
L_W (dB):	134	136	137	143	143	137	135	131	127	120	148
L_W (dBA):	95	110	121	134	140	137	136	132	126	113	144

SOUND LEVELS OUTSIDE THE FAN INLET DUCT

	31.5 Hz	63 Hz	125 Hz	250 Hz	500 Hz	1000 Hz	2000 Hz	4000 Hz	8000 Hz	16000 Hz	TOTAL
L_W (dB):	120	120	117	122	121	107	96	99	86	71	127
L_W (dBA):	81	94	101	113	118	107	97	100	85	64	119
L_P (dB):	92	92	89	94	93	78	68	70	58	42	99
L_P (dBA):	53	66	73	85	90	78	69	71	57	35	91

SOUND LEVELS OUTSIDE THE FAN DISCHARGE DUCT

	31.5 Hz	63 Hz	125 Hz	250 Hz	500 Hz	1000 Hz	2000 Hz	4000 Hz	8000 Hz	16000 Hz	TOTAL
L_W (dB):	121	121	118	123	122	108	97	100	87	72	128
L_W (dBA):	82	95	102	114	119	108	98	101	86	65	120
L_P (dB):	93	93	90	95	94	79	69	71	59	43	100
L_P (dBA):	54	67	74	86	91	79	70	72	58	36	92

SOUND LEVELS FROM THE FAN CASING

	31.5 Hz	63 Hz	125 Hz	250 Hz	500 Hz	1000 Hz	2000 Hz	4000 Hz	8000 Hz	16000 Hz	TOTAL
L_W (dB):	139	133	134	137	134	130	122	109	98	87	143
L_W (dBA):	100	107	118	128	131	130	123	110	97	80	135
L_P (dB):	111	105	106	109	106	102	94	81	70	59	116
L_P (dBA):	72	79	90	100	103	102	95	82	69	52	107

TLT-BABCOCK

SOUND ANALYSIS, Version 6.4c

INSULATED SOUND LEVELS FOR THE FAN CASING:

NOTES:

1. L_W = SOUND POWER (ref: 10^{-12}W), L_P = SOUND PRESSURE (ref: $20x10^{-5}$ mbar).
2. SOUND PRESSURE LEVELS ARE 3 FEET FROM THE SURFACE.
3. VALUES VALID FOR INSULATION TO HAVING DENSITY OF 6 TO 8 lb/ft3 DENSITY WITH 20 ga GALVANIZED STEEL LAGGING. VALUES 3 dB HIGHER IF USING ALUMINUM LAGGING.

SOUND LEVELS FOR THE INSULATED FAN CASING

		31.5 Hz	63 Hz	125 Hz	250 Hz	500 Hz	1000 Hz	2000 Hz	4000 Hz	8000 Hz	16000 Hz	TOTAL
2 A	L_W (dB):	144	136	133	132	124	116	104	90	78	67	145
4 A	L_W (dB):	143	131	128	125	115	105	93	78	66	55	143
6 A	L_W (dB):	140	129	124	119	111	100	89	74	63	52	140
10 A	L_W (dB):	139	128	121	117	108	100	89	75	62	47	139
4 AR	L_W (dB):	139	129	123	118	109	100	89	75	62	47	139
6 AR	L_W (dB):	139	127	120	115	106	98	87	71	60	48	139
10 AR	L_W (dB):	136	123	116	111	102	90	79	63	50	37	136
2 T	L_W (dB):	144	136	134	133	127	122	113	100	88	77	145
4 T	L_W (dB):	143	133	130	128	121	115	105	91	79	68	143
6 T	L_W (dB):	140	130	126	123	114	107	96	81	69	57	140
2 A	L_W (dBA):	105	110	117	123	121	116	105	91	77	60	126
4 A	L_W (dBA):	104	105	112	116	112	105	94	79	65	48	119
6 A	L_W (dBA):	101	103	108	110	108	100	90	75	62	45	114
10 A	L_W (dBA):	100	102	105	108	105	100	90	76	61	40	112
4 AR	L_W (dBA):	100	103	107	109	106	100	90	76	61	40	113
6 AR	L_W (dBA):	100	101	104	106	103	98	88	72	59	41	110
10 AR	L_W (dBA):	97	97	100	102	99	90	80	64	49	30	106
2 T	L_W (dBA):	105	110	118	124	124	122	114	101	87	70	129
4 T	L_W (dBA):	104	107	114	119	118	115	106	92	78	61	123
6 T	L_W (dBA):	101	104	110	114	111	107	97	82	68	50	117
2 A	L_P (dB):	116	108	105	104	96	88	76	62	50	39	118
4 A	L_P (dB):	115	103	100	97	87	77	65	50	38	27	116
6 A	L_P (dB):	112	101	96	91	83	72	61	46	35	24	113
10 A	L_P (dB):	111	100	93	89	80	72	43	47	34	19	112
4 AR	L_P (dB):	111	101	95	90	81	72	61	47	34	19	112
6 AR	L_P (dB):	111	99	92	87	78	70	59	43	32	20	112
10 AR	L_P (dB):	108	95	88	83	74	62	51	35	22	9	109
2 T	L_P (dB):	116	108	106	105	100	95	86	72	61	49	118
4 T	L_P (dB):	115	105	102	100	93	87	77	63	51	40	116
6 T	L_P (dB):	112	102	98	95	86	79	68	53	41	29	113
2 A	L_P (dBA):	77	82	89	95	93	88	77	63	49	32	99
4 A	L_P (dBA):	76	77	84	88	84	77	66	51	37	20	92
6 A	L_P (dBA):	73	75	80	82	80	72	62	47	34	17	87
10 A	L_P (dBA):	72	74	77	80	77	72	62	48	33	12	85
4 AR	L_P (dBA):	72	75	79	81	78	72	62	48	33	12	86
6 AR	L_P (dBA):	72	73	76	78	75	70	60	44	31	13	83
10 AR	L_P (dBA):	69	69	72	74	71	62	52	36	21	2	79
2 T	L_P (dBA):	77	82	90	96	97	95	87	73	60	42	102
4 T	L_P (dBA):	76	79	86	91	90	87	78	64	50	33	96
6 T	L_P (dBA):	73	76	82	86	83	79	69	54	40	22	90

KEY:

2 A:	2 in MINERAL WOOL	2 T:	2 in FIBERGLASS / THERMAL INSULATION
4 A:	4 in MINERAL WOOL	4 T:	4 in FIBERGLASS / THERMAL INSULATION
6 A:	6 in MINERAL WOOL	6 T:	6 in FIBERGLASS / THERMAL INSULATION
10 A:	10 in MINERAL WOOL		
4 AR:	4 in MINERAL WOOL AND 1/16 in RUBBER BONDED ON LAGGING		
6 AR:	6 in MINERAL WOOL AND 1/16 in RUBBER BONDED ON LAGGING		
10 AR:	10 in MINERAL WOOL AND 1/16 in RUBBER BONDED ON LAGGING		

This document is the property of TLT-Babcock and is confidential and proprietary to TLT-Babcock.

TLT-Babcock, Inc.
260 Springside Drive.
Akron, Ohio 44333

TLT-BABCOCK

TEL: (330) 867-8540
FAX: (330)-869-4819
www.tltbabcock.com

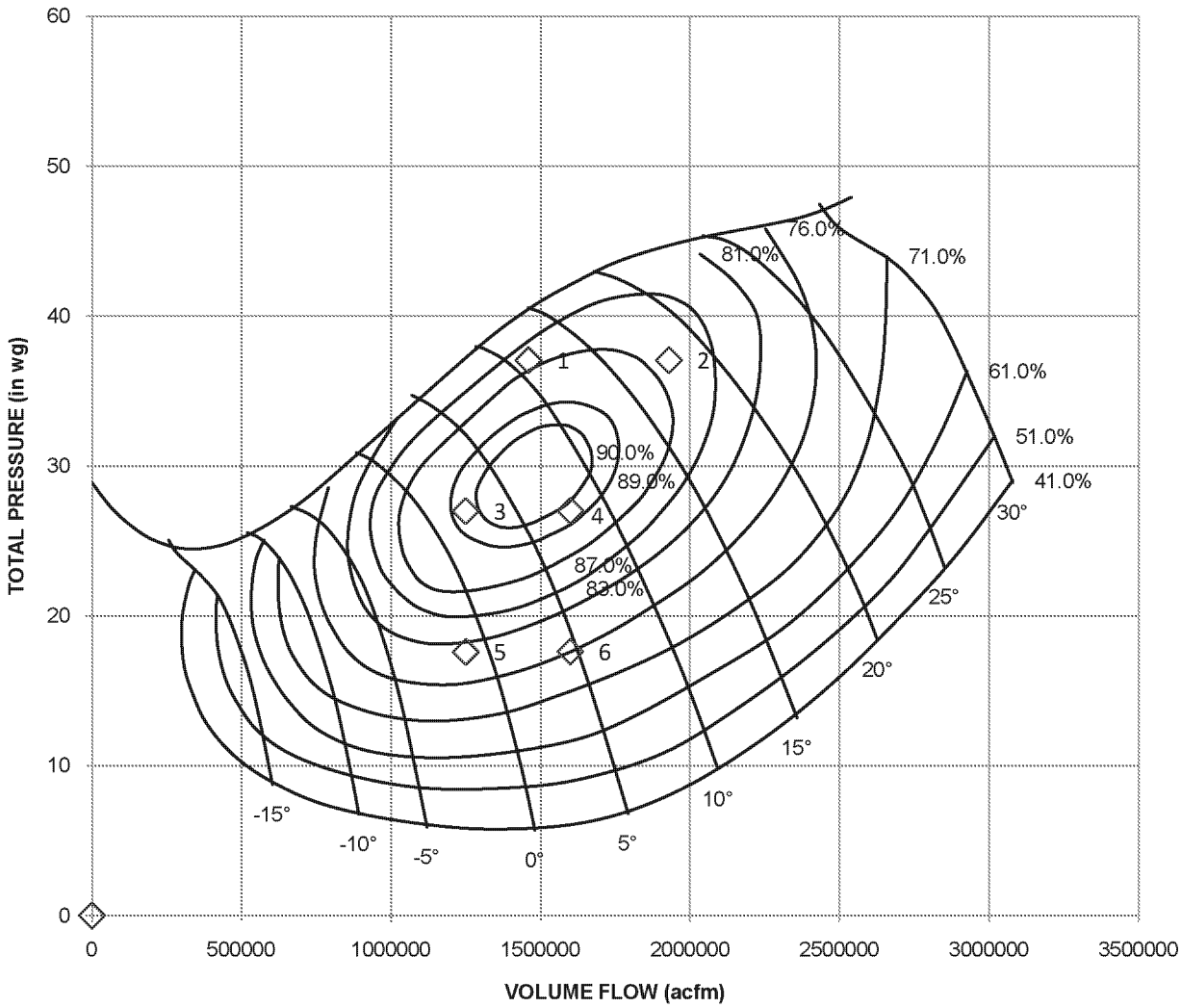

POINT	VOLUME FLOW (acfm)	INLET PRESSURE (in wg)	STATIC PRES. RISE (in wg)	TOTAL PRES. RISE (in wg)	DENSITY (lb/ft3)	TEMP (deg F)	TOTAL EFFICIENCY (%)	POWER (hp)	SPEED (rpm)
1	1,460,000	-21.00	36.00	36.00	0.0476	330	83	9638	710
2	1,930,000	-21.00	36.00	36.00	0.0476	330	83	12741	710
3	1,250,000	-15.00	27.00	27.00	0.0490	320	89	5819	710
4	1,600,000	-15.00	27.00	27.00	0.0490	320	89	7448	710
5	1,250,000	-6.00	18.00	18.00	0.0501	320	76	4580	710
6	1,600,000	-6.00	18.00	18.00	0.0501	320	76	5863	710

PROJECT NUMBER:	PROJECT NUMBER	FAN MODEL:	SAF 42.5/21.2-2
CUSTOMER:	Fossil Power (Unit 2)	BLADING:	16NA16+5%
DATE:	07/25/11	REFERENCE:	368

NOTE: Operating points adjusted to a base density of 0.0490 lb/ft3 and an operating speed of 710 rpm.

Data shown is predicted. Performance is only guaranteed as defined in the proposal.

TLT-BABCOCK

SPEED-TORQUE CURVE

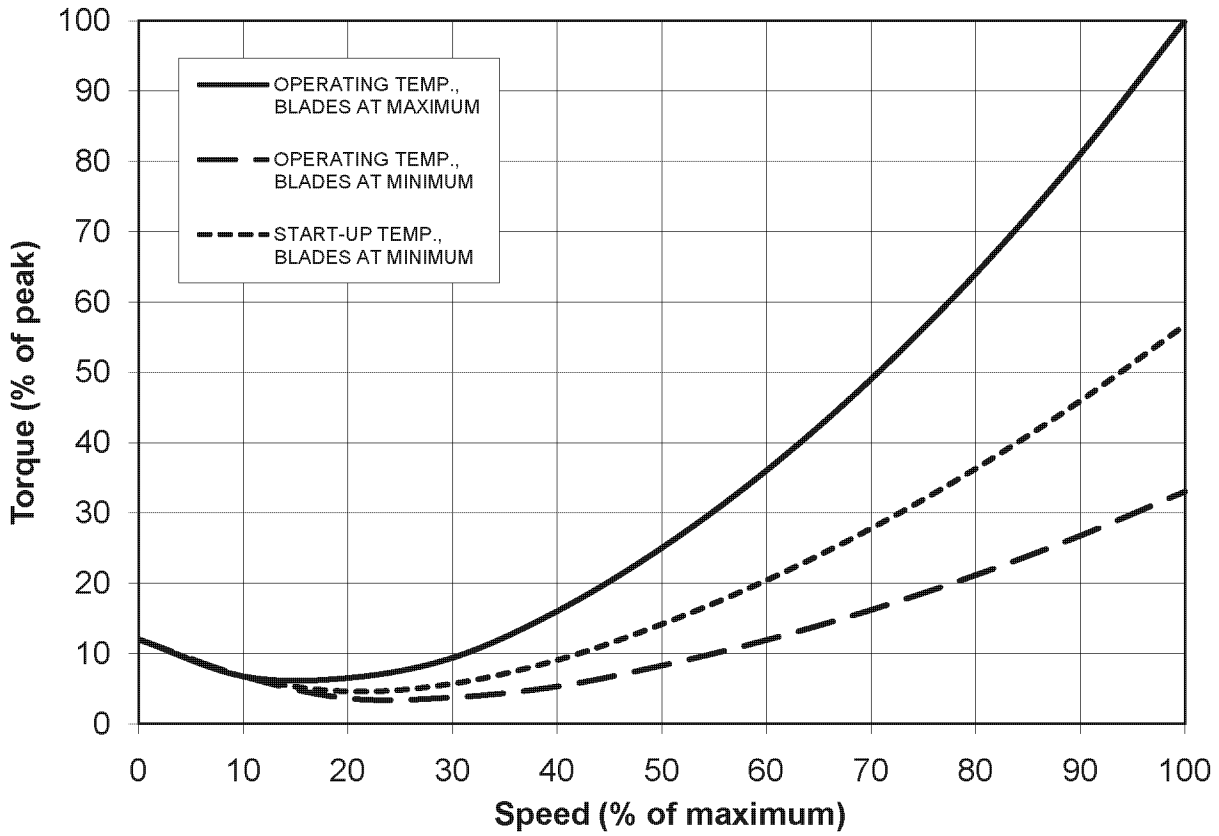

CUSTOMER / PROJECT NAME:	Fossil Power (Unit 2)	
PROJECT NUMBER:	project	
BY:	Pei	
FAN MODEL:	SAF42.5-21.2-2	
MOMENT OF INERTIA:	360,000 lb ft^2	15170.4 kg m^2
FAN OPERATING SPEED:	710 rpm	
ANGLE OF BLADES AT MINIMUM SETTING:	-30 °	
OPERATING GAS TEMPERATURE:	330.0 °F	165.6 °C
OPERATING GAS INLET DENSITY:	0.0476 lb/ft^3	0.7625 kg/m^3
OPERATING PEAK POWER REQUIREMENT, BLADES AT MAXIMUM:	12741 hp	9501 kW
OPERATING PEAK FAN TORQUE, BLADES AT MAXIMUM:	94250 ft lb	127785 N m
OPERATING POWER REQUIREMENT, BLADES AT MINIMUM:	4205 hp	3135 kW
OPERATING FAN TORQUE, BLADES AT MINIMUM:	31102 ft lb	42169 N m
START-UP GAS TEMPERATURE:	0.0 °F	-17.8 °C
START-UP GAS INLET DENSITY:	0.0818 lb/ft^3	1.3099 kg/m^3
START-UP POWER REQUIREMENT, BLADES AT MINIMUM:	7223 hp	5386 kW
START-UP FAN TORQUE, BLADES AT MINIMUM:	53431 ft lb	72443 N m

11-10 r5

TLT-BABCOCK

SOUND ANALYSIS, Version 6.4c

PROJECT NUMBER:	0
CUSTOMER / PROJECT NAME:	Fossil Power (Unit 2)
FAN MODEL:	SAF42.5-21.2-2
VOLUME FLOW RATE:	1600000 acfm
TOTAL PRESSURE:	27 in wg
INLET DENSITY:	0.049 lbm/ft3
TEMPERATURE:	320 °F
FAN POWER:	7448 hp
SPEED:	710 rpm
BLADE PASSING FREQUENCY:	189 Hz
ESTIMATED FAN PULSATION:	3.31 in wg p-p

NOTES:

1. L_W = SOUND POWER (ref: 10^{-12}W), L_P = SOUND PRESSURE (ref: $20x10^{-6}$ Pa).
2. DUCT AND CASING SOUND PRESSURE LEVELS ARE 1 METER FROM THE SURFACE.
3. BASED ON A DUCTED INLET AND DUCTED OUTLET.
4. RESULTS ARE FOR THE FREE FIELD CONDITION. SOUND LEVEL INCREASES FROM MULTIPLE FANS, OTHER SOUND SOURCES, REVERBERATION OR REFLECTION ARE NOT INCLUDED UNLESS OTHERWISE NOTED.
5. PULSATION IS GIVEN FOR BLADE PASSING FREQUENCY NEAR TERMINATION FLANGES. DUCTWORK DESIGN MAY AFFECT MAGNITUDE.

TWO STAGE AXIAL UNATTENUATED FAN NOISE LEVELS:

TOTAL SOUND POWER LEVEL OF THE FAN (for reference only)

	31.5 Hz	63 Hz	125 Hz	250 Hz	500 Hz	1000 Hz	2000 Hz	4000 Hz	8000 Hz	16000 Hz	TOTAL
L_W (dB):	135	137	138	144	144	138	136	132	128	121	148
L_W (dBA):	96	111	122	135	141	138	137	133	127	114	144

SOUND LEVELS OUTSIDE THE FAN INLET DUCT

	31.5 Hz	63 Hz	125 Hz	250 Hz	500 Hz	1000 Hz	2000 Hz	4000 Hz	8000 Hz	16000 Hz	TOTAL
L_W (dB):	120	121	117	122	121	107	97	99	87	71	128
L_W (dBA):	81	95	101	113	118	107	98	100	86	64	120
L_P (dB):	92	93	89	94	93	79	68	71	58	43	99
L_P (dBA):	53	67	73	85	90	79	69	72	57	36	92

SOUND LEVELS OUTSIDE THE FAN DISCHARGE DUCT

	31.5 Hz	63 Hz	125 Hz	250 Hz	500 Hz	1000 Hz	2000 Hz	4000 Hz	8000 Hz	16000 Hz	TOTAL
L_W (dB):	121	122	118	123	122	108	98	100	88	72	129
L_W (dBA):	82	96	102	114	119	108	99	101	87	65	121
L_P (dB):	93	94	90	95	94	80	69	72	59	44	100
L_P (dBA):	54	68	74	86	91	80	70	73	58	37	93

SOUND LEVELS FROM THE FAN CASING

	31.5 Hz	63 Hz	125 Hz	250 Hz	500 Hz	1000 Hz	2000 Hz	4000 Hz	8000 Hz	16000 Hz	TOTAL
L_W (dB):	139	133	134	137	134	130	122	109	98	87	143
L_W (dBA):	100	107	118	128	131	130	123	110	97	80	135
L_P (dB):	112	106	107	110	107	103	95	82	71	60	116
L_P (dBA):	73	80	91	101	104	103	96	83	70	53	108

TLT-BABCOCK

SOUND ANALYSIS, Version 6.4c

INSULATED SOUND LEVELS FOR THE FAN CASING:

NOTES:

1. L_W = SOUND POWER (ref: 10^{-12}W), L_P = SOUND PRESSURE (ref: $20x10^{-5}$ mbar).
2. SOUND PRESSURE LEVELS ARE 3 FEET FROM THE SURFACE.
3. VALUES VALID FOR INSULATION TO HAVING DENSITY OF 6 TO 8 lb/ft3 DENSITY WITH 20 ga GALVANIZED STEEL LAGGING. VALUES 3 dB HIGHER IF USING ALUMINUM LAGGING.

SOUND LEVELS FOR THE INSULATED FAN CASING

		31.5 Hz	63 Hz	125 Hz	250 Hz	500 Hz	1000 Hz	2000 Hz	4000 Hz	8000 Hz	16000 Hz	TOTAL
2 A	L_W (dB):	144	136	133	132	124	116	104	90	78	67	145
4 A	L_W (dB):	143	131	128	125	115	105	93	78	66	55	143
6 A	L_W (dB):	140	129	124	119	111	100	89	74	63	52	140
10 A	L_W (dB):	139	128	121	117	108	100	89	75	62	47	139
4 AR	L_W (dB):	139	129	123	118	109	100	89	75	62	47	139
6 AR	L_W (dB):	139	127	120	115	106	98	87	71	60	48	139
10 AR	L_W (dB):	136	123	116	111	102	90	79	63	50	37	136
2 T	L_W (dB):	144	136	134	133	127	122	113	100	88	77	145
4 T	L_W (dB):	143	133	130	128	121	115	105	91	79	68	144
6 T	L_W (dB):	140	130	126	123	114	107	96	81	69	57	140
2 A	L_W (dBA):	105	110	117	123	121	116	105	91	77	60	126
4 A	L_W (dBA):	104	105	112	116	112	105	94	79	65	48	119
6 A	L_W (dBA):	101	103	108	110	108	100	90	75	62	45	114
10 A	L_W (dBA):	100	102	105	108	105	100	90	76	61	40	112
4 AR	L_W (dBA):	100	103	107	109	106	100	90	76	61	40	113
6 AR	L_W (dBA):	100	101	104	106	103	98	88	72	59	41	110
10 AR	L_W (dBA):	97	97	100	102	99	90	80	64	49	30	106
2 T	L_W (dBA):	105	110	118	124	124	122	114	101	87	70	129
4 T	L_W (dBA):	104	107	114	119	118	115	106	92	78	61	123
6 T	L_W (dBA):	101	104	110	114	111	107	97	82	68	50	117
2 A	L_P (dB):	117	109	106	105	97	89	77	63	51	40	118
4 A	L_P (dB):	116	104	101	98	88	78	66	51	39	28	116
6 A	L_P (dB):	113	102	97	92	84	73	62	47	36	25	113
10 A	L_P (dB):	112	101	94	90	81	73	44	48	35	20	112
4 AR	L_P (dB):	112	102	96	91	82	73	62	48	35	20	112
6 AR	L_P (dB):	112	100	93	88	79	71	60	44	33	21	112
10 AR	L_P (dB):	109	96	89	84	75	63	52	36	23	10	109
2 T	L_P (dB):	117	109	107	106	100	95	86	73	61	50	118
4 T	L_P (dB):	116	106	103	101	94	88	78	64	52	41	116
6 T	L_P (dB):	113	103	99	96	87	80	69	54	42	30	113
2 A	L_P (dBA):	78	83	90	96	94	89	78	64	50	33	99
4 A	L_P (dBA):	77	78	85	89	85	78	67	52	38	21	92
6 A	L_P (dBA):	74	76	81	83	81	73	63	48	35	18	87
10 A	L_P (dBA):	73	75	78	81	78	73	63	49	34	13	85
4 AR	L_P (dBA):	73	76	80	82	79	73	63	49	34	13	86
6 AR	L_P (dBA):	73	74	77	79	76	71	61	45	32	14	83
10 AR	L_P (dBA):	70	70	73	75	72	63	53	37	22	3	79
2 T	L_P (dBA):	78	83	91	97	97	95	87	74	60	43	102
4 T	L_P (dBA):	77	80	87	92	91	88	79	65	51	34	96
6 T	L_P (dBA):	74	77	83	87	84	80	70	55	41	23	90

KEY:

2 A:	2 in MINERAL WOOL	2 T:	2 in FIBERGLASS / THERMAL INSULATION
4 A:	4 in MINERAL WOOL	4 T:	4 in FIBERGLASS / THERMAL INSULATION
6 A:	6 in MINERAL WOOL	6 T:	6 in FIBERGLASS / THERMAL INSULATION
10 A:	10 in MINERAL WOOL		
4 AR:	4 in MINERAL WOOL AND 1/16 in RUBBER BONDED ON LAGGING		
6 AR:	6 in MINERAL WOOL AND 1/16 in RUBBER BONDED ON LAGGING		
10 AR:	10 in MINERAL WOOL AND 1/16 in RUBBER BONDED ON LAGGING		

This document is the property of TLT-Babcock and is confidential and proprietary to TLT-Babcock.

FlaktWoods
1110 Main Place Tower
Buffalo, NY 14202-3711

t 716-845-0500
f 716-845-5055
e jim.t.greenzweig@flaktwoods.com
w www.flaktwoods.com

July 22, 2011`

Sargent & Lundy
55 E. Monroe St.
Chicago, IL 60603

Attention: Steven Passimeni

Subject: Confidential Client
Units 1 & 2
ID Fans
FlaktWoods Quote Number 410781

Steve:

Enclosed is FW's budgetary quote for ID Fans and accessories per your 7-18-11 e-mail.

Per your request, FW is quoting the following:

(2) PFTV-355-190-65 Two Stage, Single Speed Axial ID Fans at 900 RPM for Unit 1
(2) PFTV-355-190-65 Two Stage, Single Speed Axial ID Fans at 900 RPM for Unit 2

We have selected the same fans for both Units to allow for commonality of spare parts but with different sized motors to accommodate the different ratings for each fan. Identical motors could also be supplied at little difference in price.

Highlights of our proposal are as follows:

Axial Fans:

FlaktWoods simplified axial fan design offers several features that lower maintenance cost over the lifetime of the Unit:

- Lower number of moving parts to maintain
- Blades are removable through and access port in the fan casing
- Blade bearings are replaceable with the impeller in place in the fan
- Simplified Control system with low hysteresis and all major components located outside the fan.

GA Drawing Times for all Options are 6-8 weeks ARO for all equipment quoted

Shipment Times are as follows: All Fans – 14 to 16 months ARO

The Utility market is one of the primary markets served by FlaktWoods. FlaktWoods' experience and expertise in this market is unparalleled. We know how to handle major Utility projects and our vast organization of manufacturing facilities, technical centers, service locations and sales locations assures you of a successful project. For more information about FlaktWoods, please visit our Web site at www.flaktwoods.com.

We thank you for the opportunity of submitting this proposal, and look forward to being able to discuss its merits personally with you. If you have any questions concerning our proposal, please feel free to contact any of the following individuals:

FlaktWoods
1110 Main Place Tower
Buffalo, NY 14202-3711

t 716-845-0500
f 716-845-5055
e jim.t.greenzweig@flaktwoods.com
w www.flaktwoods.com

NAME	LOCATION	TELEPHONE	FAX	E MAIL
Jim Greenzweig	Buffalo, NY	716-845-0500	716-845-5055	jim.t.greenzweig@flaktwoods.com
John King	Chicago, IL	630-922-7200	630-922-7275	jking@epco-llc.com

Sincerely,

Jim Greenzweig
Director – Market Development and Application Engineering

cc: John King

FläktWoods

Buffalo Office
1110 Main Place Tower
Buffalo, NY 14202
PH 716-845-0500
Fax 716-845-5055

E-mail jim.t.greenzweig@flaktwoods.com

Customer: Sargent & Lundy
End User: Confidential Client
Project: Unit 1
Reference: FlaktWoods Proposal 410781
Fan Service: Induced Draft
Unit Tag #: (2) Single Speed Axial ID Fans per Unit

Quote No.: 410781
Date: 7/22/2011

FAN DESCRIPTION

PFTV-355-190-65

Bearing Type:	Sleeve	Housing	0.375 A-36
Inboard:	Renk ERZL 28-280mm	Impeller Casing	0.625 A-36
Outboard:	Renk ERZL 28-280mm	Flanged Inlet	Yes
Bearing Supports:	Fan Casing	Flanged Outlet	Yes
Soleplate for Ped.:	NA	Drain Connection(s)	Yes
Shaft Seal(s):	Gasket	Inspection Door(s)	Yes

PRICING

No. Fan(s) Required:	**2**	**Net Each**	**Net Total**	**Wt. Each (lb)**
Base Fan		$2,252,224	$4,504,449	112,832
Each fan includes the following:				---
- 2 Impellers with built-in hydraulic cylinder for blade pitch control.				---
- 21 Nodular Iron Blades Per Impeller				---
- 2 Circulating Oil Lubricated Main Bearings - Sleeve Type				---
- Separate Hydraulic blade-pitch control and Lubrication Systems each including the following:				---
- oil tank with 2 circulation pumps(1 stand-by) and 2 oil filters				---
- oil/water or air cooler				---
- temperature and pressure sensors and instruments for monitoring and alarm				---
- proportional valve for flow control				---
- rotary union at impeller				---
- blade position sensor on diffuser				---
- control cabinet				---
- 2 Impeller casings				---
- 1 Intermediate section				---
- 1 inlet box				---
- 1 diffuser				---
- 1 drive coupling and guard				---
- 1 set of inlet and discharge expansion joints				---
- 2 sealing / cooling air fans				---
- 1 stall warning system with probes				---
- 1 special tool box, containing hand tools for mounting and dismounting of the impeller.				---
- assembly details				---
- instruction and operating manuals				---
- Enclousure for Lube Oil and Hydraulic Oil systems				
13000 HP, 900 RPM, Motor, WPII Enclosure 6.6 kV		Included	Included	---

Design Rating:

CFM	FTP (in. WG)	RPM	Temp. (Deg F)	Density (lb/ft3)	HP
1,830,000	36.00	890	330	0.0477	11894
1,540,000	26.00	890	320	0.0491	7463

Rotor Inertia:
198,293 lb-ft2

Rotor Weight:
29,095 lb

FOB: **Manufacturing Point Not Freight Allowed**

Flakt Woods Americas

Duty Point Datasheet

PF PFTV - Two Stage

Date:	: Tuesday, July 19, 2011	Project Name	: Unit 1
Fan Code	: PFTV-355-190-65	Quotation Number	: 410781
Item Reference:	:	Customer	: Sargent & Lundy

Customer Input Data

Fan Inlet Given As	Total Pressure	Inlet Area (Section A)	170.60 ft²	Fan Designation	Nodular Iron
Fan Outlet Given As	Total Pressure	Suction Box Inlet Area (Section B)	170.60 ft²	Fan Speed	890 rpm
Barometric Pressure	407.48 inwg	Diffuser Outlet Area (Section C)	138.68 ft²	Blade Tip Speed	32547 fpm
Elevation over sea level	0 ft	Outlet Area (Section D)	240.97 ft²	Fan Diameter / Size	3548 mm
				Blades	22

Duty Point Designation	Unit 1 Test Block - Hi Flow	Unit 1 SCR + FGD - Hi Flow	Unit 1 FGD Only - Hi Flow	Unit 1 Test Block - Low Flow
Blade Angle	77°	66°	63°	69°
Customer Input Data				
Actual Flow	1830000 cfm	1540000 cfm	1540000 cfm	1380000 cfm
Inlet Pressure @ "A"	-21.00 inwg total	-15.00 inwg total	-4.00 inwg total	-21.00 inwg total
Outlet Pressure @ "D"	15.00 inwg total	11.00 inwg total	11.00 inwg total	15.00 inwg total
Pressure Rise between "A" and "D"	36.00 inwg total	26.00 inwg total	15.00 inwg total	36.00 inwg total
Fan Selection Data				
Gas Inlet Temperature	330 °F	320 °F	320 °F	330 °F
Standard Density	0.075 lb/ft³	0.075 lb/ft³	0.075 lb/ft³	0.075 lb/ft³
Actual Density	0.0477 lb/ft³	0.0491 lb/ft³	0.0505 lb/ft³	0.0477 lb/ft³
Inlet Ancillary Loss "A" to "B"	0.00 inwg	0.00 inwg	0.00 inwg	0.00 inwg
Dynamic Pressure @ "B"	4.56 inwg	3.32 inwg	3.42 inwg	2.59 inwg
Total Pressure @ "B"	-21.00 inwg	-15.00 inwg	-4.00 inwg	-21.00 inwg
Total Pressure @ "C"	16.24 inwg	11.91 inwg	11.93 inwg	15.71 inwg
Connection Loss	1.24 inwg	0.91 inwg	0.93 inwg	0.71 inwg
Outlet Ancillary Loss	0.00 inwg	0.00 inwg	0.00 inwg	0.00 inwg
Outlet Static Pressure @ "D"	12.72 inwg	9.34 inwg	9.29 inwg	13.70 inwg
Outlet Total Pressure @ "D"	15.00 inwg	11.00 inwg	11.00 inwg	15.00 inwg
Outlet Dynamic Pressure @ "D"	2.28 inwg	1.66 inwg	1.71 inwg	1.30 inwg
Fan Pressure Rise (FP), "B" to "C"	37.24 inwg	26.91 inwg	15.93 inwg	36.71 inwg
Fan Efficiency (FE), "B" to "C"	87.6 %	85.6 %	69.2 %	89.1 %
Total Pressure Rise (FTP), "A" to "D"	36.00 inwg	26.00 inwg	15.00 inwg	36.00 inwg
Fan Total Efficiency (FTE), "A" to "D"	84.7 %	82.7 %	65.1 %	87.4 %
Fan Static Pressure (FSP), "A" to "D"	33.72 inwg	24.34 inwg	13.29 inwg	34.70 inwg
Fan Static Efficiency (FSE)	79.3 %	77.4 %	57.7 %	84.3 %
Static Pressure Rise (SPR)	38.27 inwg	27.66 inwg	16.70 inwg	37.29 inwg
Duty Shaft Power	11894 HP	7463 HP	5522 HP	8689 HP
Compressibility Factor	0.972	0.979	0.989	0.972

1110 Main Place Tower
Buffalo, NY , , 14202
Tel: 716-845-0500, Cell 716-536-8019 Fax: 716-845-5055

Website: www.flaktwoods.com
Email: jim.t.greenzweig@flaktwoods.com
Copyright Fläkt Woods Group 2003 - 2011

Flakt Woods Americas

Duty Point Datasheet

PF PFTV - Two Stage

Date:	: Tuesday, July 19, 2011	Project Name	: Unit 1
Fan Code	: PFTV-355-190-65	Quotation Number	: 410781
Item Reference:	:	Customer	: Sargent & Lundy

Customer Input Data

Fan Inlet Given As	Total Pressure	Inlet Area (Section A)	170.60 ft²	Fan Designation	Nodular Iron
Fan Outlet Given As	Total Pressure	Suction Box Inlet Area (Section B)	170.60 ft²	Fan Speed	890 rpm
Barometric Pressure	407.48 inwg	Diffuser Outlet Area (Section C)	138.68 ft²	Blade Tip Speed	32547 fpm
Elevation over sea level	0 ft	Outlet Area (Section D)	240.97 ft²	Fan Diameter / Size	3548 mm
				Blades	22

Duty Point Designation	Unit 1 SCR + FGD - Low Flow	Unit 1 FGD Only - Low Flow
Blade Angle	58°	55°
Customer Input Data		
Actual Flow	1150000 cfm	1150000 cfm
Inlet Pressure @ "A"	-15.00 inwg total	-4.00 inwg total
Outlet Pressure @ "D"	11.00 inwg total	11.00 inwg total
Pressure Rise between "A" and "D"	26.00 inwg total	15.00 inwg total
Fan Selection Data		
Gas Inlet Temperature	320 °F	320 °F
Standard Density	0.075 lb/ft³	0.075 lb/ft³
Actual Density	0.0491 lb/ft³	0.0505 lb/ft³
Inlet Ancillary Loss "A" to "B"	0.00 inwg	0.00 inwg
Dynamic Pressure @ "B"	1.85 inwg	1.91 inwg
Total Pressure @ "B"	-15.00 inwg	-4.00 inwg
Total Pressure @ "C"	11.51 inwg	11.52 inwg
Connection Loss	0.51 inwg	0.52 inwg
Outlet Ancillary Loss	0.00 inwg	0.00 inwg
Outlet Static Pressure @ "D"	10.07 inwg	10.05 inwg
Outlet Total Pressure @ "D"	11.00 inwg	11.00 inwg
Outlet Dynamic Pressure @ "D"	0.93 inwg	0.95 inwg
Fan Pressure Rise (FP), "B" to "C"	26.51 inwg	15.52 inwg
Fan Efficiency (FE), "B" to "C"	89.0 %	73.0 %
Total Pressure Rise (FTP), "A" to "D"	26.00 inwg	15.00 inwg
Fan Total Efficiency (FTE), "A" to "D"	87.3 %	70.6 %
Fan Static Pressure (FSP), "A" to "D"	25.07 inwg	14.05 inwg
Fan Static Efficiency (FSE)	84.2 %	66.1 %
Static Pressure Rise (SPR)	26.92 inwg	15.95 inwg
Duty Shaft Power	5278 HP	3804 HP
Compressibility Factor	0.979	0.989

1110 Main Place Tower
Buffalo, NY , , 14202
Tel: 716-845-0500, Cell 716-536-8019 Fax: 716-845-5055

Website: www.flaktwoods.com
Email: jim.t.greenzweig@flaktwoods.com
Copyright Fläkt Woods Group 2003 - 2011

Flakt Woods Americas

Performance Chart

PF PFTV - Two Stage

Project Name	: Unit 1	Date:	: Tuesday, July 19, 2011
Quotation Number	: 410781	Fan Code	: PFTV-355-190-65
Customer	: Sargent & Lundy	Item Reference:	:

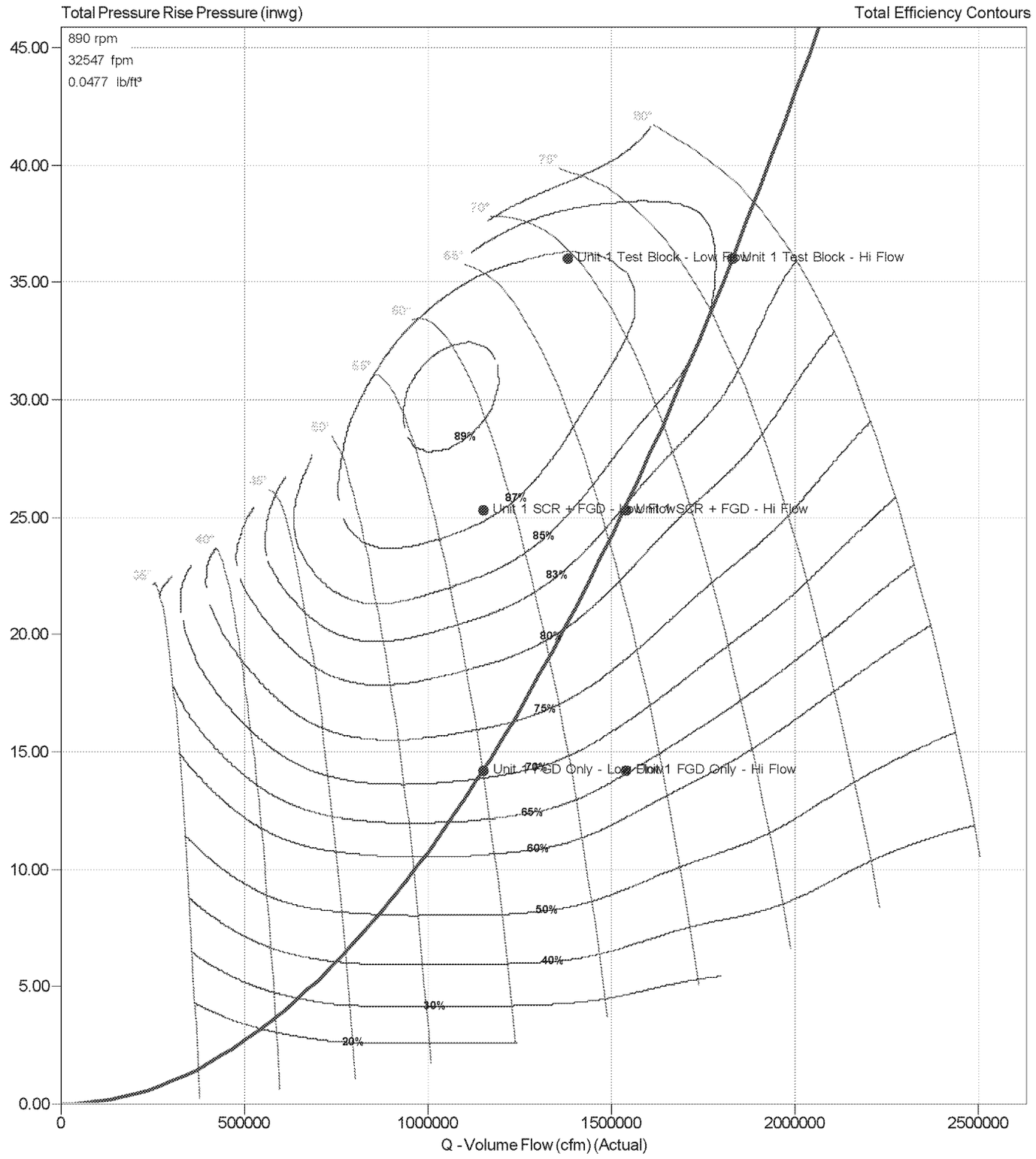

1110 Main Place Tower
Buffalo, NY , , 14202
Tel: 716-845-0500, Cell 716-536-8019 Fax: 716-845-5055
Website: www.flaktwoods.com
Email: jim.t.greenzweig@flaktwoods.com
Copyright Fläkt Woods Group 2003 - 2011

Flakt Woods Americas

Sound Datasheet

PF PFTV - Two Stage

Project Name	: Unit 1	Date:	: Tuesday, July 19, 2011
Quotation Number	: 410781	Fan Code	: PFTV-355-190-65
Customer	: Sargent & Lundy	Item Reference:	:

Duty Point Designation		**Unit 1 Test Block - Hi Flow**
Flow	1830000	cfm
Total Pressure Rise	36.00	inwg
Density	0.0477	lb/ft³
Compressibility	0.972	
Measuring Distance	10	ft
Requirement	85	dB(A)
Operating speed	890	rpm
Lws	37	dB

Sound power levels (dB re 10^{-12} W):

Sound Spectrum (Hz)	63	125	250	500	1k	2k	4k	8k	dB	dB(A)
Lwa	131	125	130	142	139	132	124	120	144	142
Lwc	116	116	116	126	118	111	99	83	128	124

Where:

Lwa - sound power level to outlet or inlet duct
Lwc - sound power level from fan connected to inlet and outlet ducts (motor not included)

Sound pressure levels (dB re $2*10^{-5}$ Pa):

Sound Spectrum (Hz)	63	125	250	500	1k	2k	4k	8k	dB	dB(A)
Lpc	92	92	92	102	93	87	75	59	104	100
250+al.1mm	-7	-8	-10	-16	-21	-23	-21	-20		
Lpc(isol)	85	84	82	86	72	64	54	39	91	84

Where:

Lpc - sound pressure level at the distance specified as measuring distance above from a ducted fan in free field over reflecting plane (motor sound and sound from sound reducing equipment are not included).

250 is the thickness in mm of the mineral wool of density 65-80kg/m3, and al means 1mm aluminium cover sheet

N.B. Octive band levels are linear (dB).

1110 Main Place Tower
Buffalo, NY , , 14202
Tel: 716-845-0500, Cell 716-536-8019 Fax: 716-845-5055
Website: www.flaktwoods.com
Email: jim.t.greenzweig@flaktwoods.com
Copyright Fläkt Woods Group 2003 - 2011

Flakt Woods Americas

Drawing and Dimensions

PF PFTV - Two Stage

Project Name	: Unit 1	Date:	: Tuesday, July 19, 2011
Quotation Number	: 410781	Fan Code	: PFTV-355-190-65
Customer	: Sargent & Lundy	Item Reference:	:

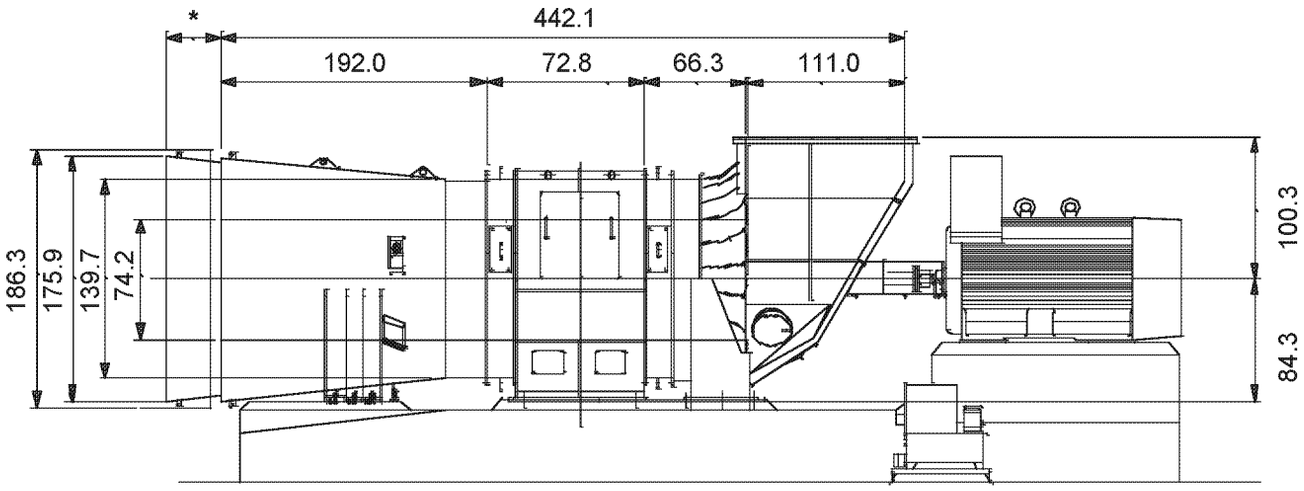

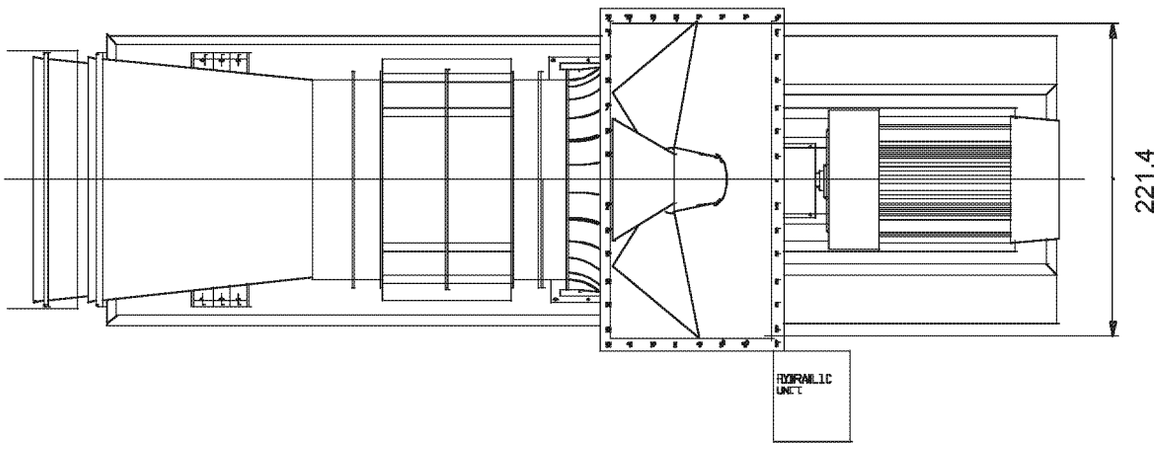

* 700 mm withdrawal space required.

Weights and dimensions are preliminary. Total Weight excludes motor and concrete.

1110 Main Place Tower
Buffalo, NY , , 14202
Tel: 716-845-0500, Cell 716-536-8019 Fax: 716-845-5055
Website: www.flaktwoods.com
Email: jim.t.greenzweig@flaktwoods.com
Copyright Fläkt Woods Group 2003 - 2011

FlaktWoods Americas

Fan Denomination Datasheet

PF PFTV - Two Stage

Date: : Tuesday, July 19, 2011
Fan Code : PFTV-355-190-65
Item Reference: :

Project Name : Unit 1
Quotation Number : 410781
Customer : Sargent & Lundy

Denomination	*Explanation*	*Legend/Formula*
Inlet area	Standard or user specified area at section A	$Area_A$
Outlet area	Standard or user specified area at section D	$Area_D$
Inlet pressure	User specified pressure at section A.	The user specifies static or total pressure
Outlet pressure	User specified pressure at section D.	The user specifies static or total pressure
Fan inlet static pressure	Static pressure at section A	Ps_A
Fan inlet dynamic (velocity) pressure	Dynamic pressure at section A	Pd_A
Fan inlet total pressure	Total pressure at section A	Pt_A
Fan outlet static pressure	Static pressure at section D	Ps_D
Fan outlet dynamic (velocity) pressure	Dynamic pressure at section D	Pd_D
Fan outlet total pressure	Total pressure at section D	Pt_D
Connection loss	Carnot loss between C and D	Connection loss
Diffuser outlet dynamic pressure	Dynamic pressure at section C	Pd_C
Diffuser outlet total pressure	Total pressure at section C	Pt_C
Inlet ancillary loss	User specified extra loss between section A and B e.g. an inlet sound absorber.	ΔP_{inlet}
Outlet ancillary loss	User specified extra loss between section C and D.	ΔP_{outlet}
Total pressure rise, FTP	Total pressure rise between section A and D.	$Pt_D - Pt_A$
Fan pressure rise, FP	Total pressure rise between section B and C.	$Pt_C - Pt_B$
Fan static pressure, FSP	Static pressure at section D - total pressure at section A.	$Ps_D - Pt_A$
Static pressure rise, SPR	Static pressure rise between section A and D.	$Ps_D - Ps_A$
Shaft power	Fan shaft power required to rotate the fan.	
Fan efficiency, FE	Fan efficiency based on FP	Flow * FP * CF / Shaft Power
Fan total efficiency, FTE	Fan efficiency based on FTP	Flow * FTP * CF / Shaft Power
Fan static efficiency, FSE	Fan efficiency based on FSP	Flow * FSP * CF / Shaft Power
Compressibility factor, CF	Factor used to compensate for gas compressibility.	

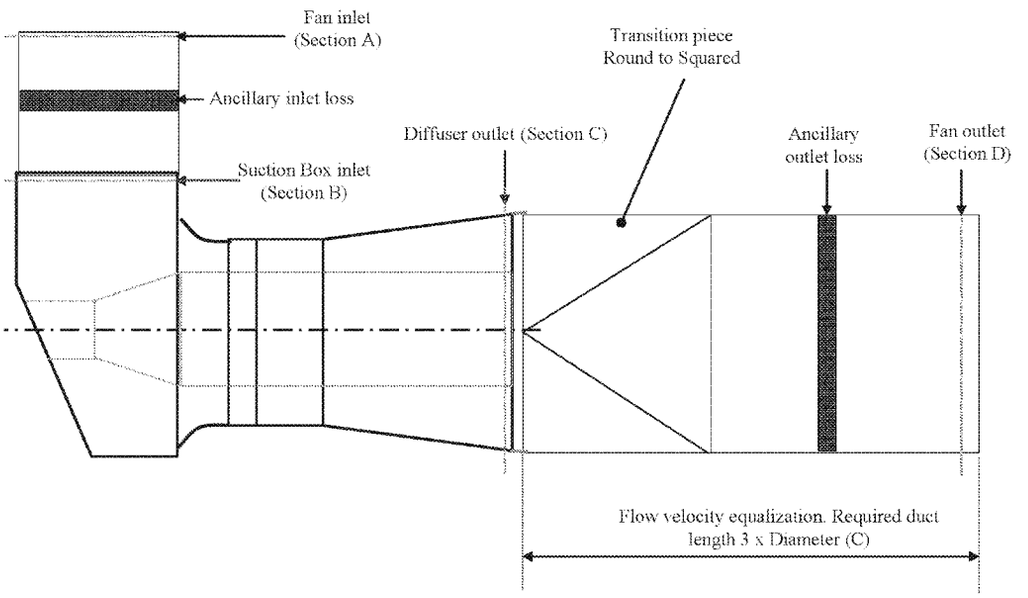

1110 Main Place Tower
Buffalo, NY , , 14202
Tel: 716-845-0500, Cell 716-536-8019 Fax: 716-845-5055

Website: www.flaktwoods.com
Email: jim.t.greenzweig@flaktwoods.com
Copyright Fläkt Woods Group 2003 - 2011

FläktWoods

Speed vs. Torque Curve

Customer: Sargent & Lundy
Project: Unit 1
Reference: FlaktWoods Proposal 410781
Unit Tag #: (2) Single Speed Axial ID Fans per Unit
Fan : PFTV-355-190-65
Stages: Two Stage Axial Fan
Blade Type: Nodular Iron Blades
Drawing Number : 410781 ST

		RPM	HP	Torque ft-lb	Temp.	
Blades	Closed	890	1,322	7,797	330	ºF
Blades	Closed	890	2,270	13,391	0	ºF

Fan WK² : 198,293 lb-ft2
Bearing Type : Sleeve

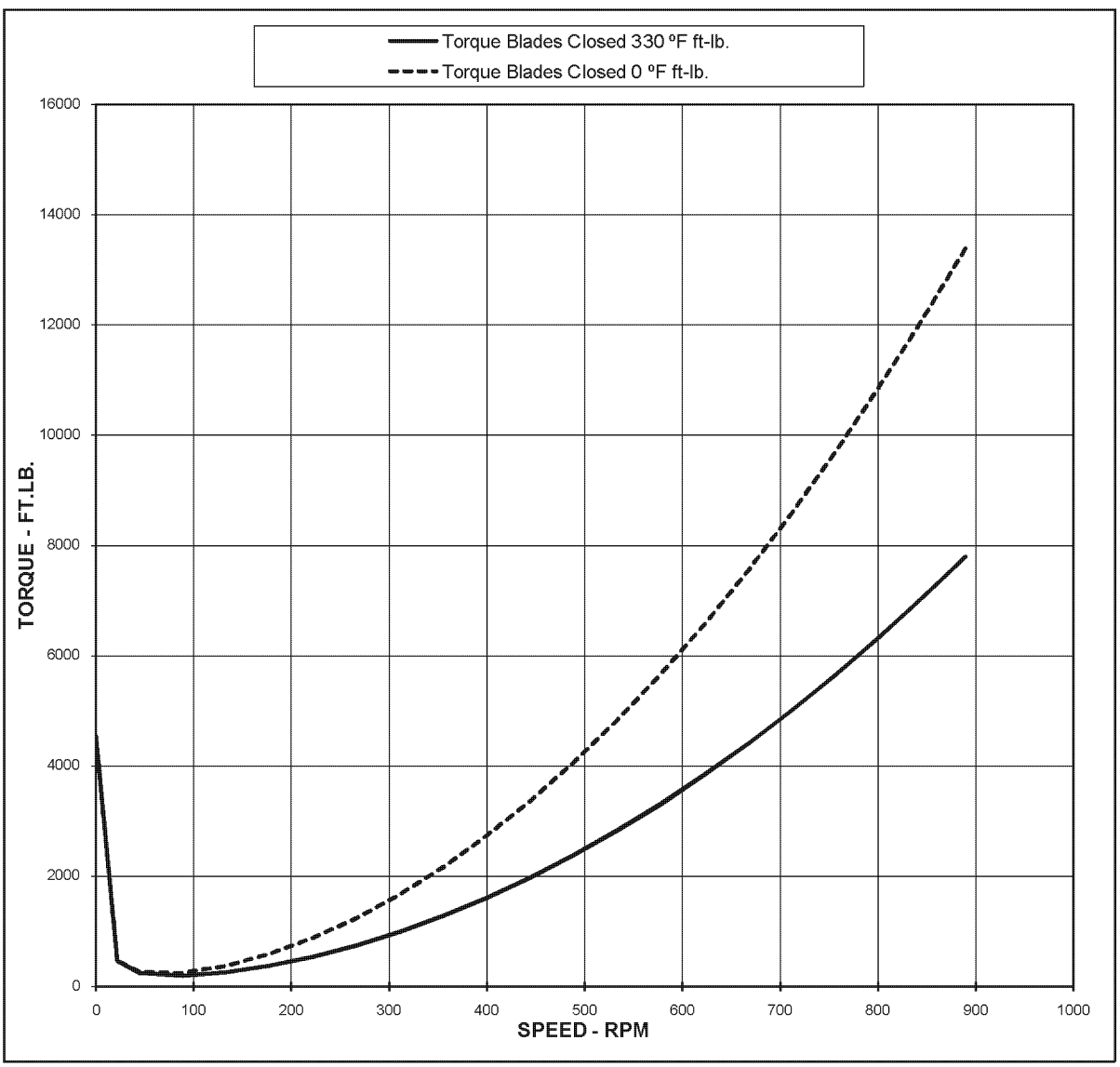

Axial-Spd Torq
7/22/2011

Buffalo Office
1110 Main Place Tower
Buffalo, NY 14202
PH 716-845-0500
Fax 716-845-5055

E-mail jim.t.greenzweig@flaktwoods.com

Customer: Sargent & Lundy
End User: Confidential Client
Project: Unit 2
Reference: FlaktWoods Proposal 410781
Fan Service: Induced Draft
Unit Tag #: (2) Single Speed Axial ID Fans per Unit

Quote No.: 410781
Date: 7/22/2011

FAN DESCRIPTION

PFTV-355-190-65

Bearing Type:	Sleeve	Housing	0.375 A-36
Inboard:	Renk ERZL 28-280mm	Impeller Casing	0.625 A-36
Outboard:	Renk ERZL 28-280mm	Flanged Inlet	Yes
Bearing Supports:	Fan Casing	Flanged Outlet	Yes
Soleplate for Ped.:	NA	Drain Connection(s)	Yes
Shaft Seal(s):	Gasket	Inspection Door(s)	Yes

PRICING

No. Fan(s) Required:	**2**	**Net Each**	**Net Total**	**Wt. Each (lb)**
Base Fan		$2,270,330	$4,540,659	112,840
Each fan includes the following:				---
- 2 Impellers with built-in hydraulic cylinder for blade pitch control.				---
- 21 Nodular Iron Blades Per Impeller				---
- 2 Circulating Oil Lubricated Main Bearings - Sleeve Type				---
- Separate Hydraulic blade-pitch control and Lubrication Systems each including the following:				---
- oil tank with 2 circulation pumps(1 stand-by) and 2 oil filters				---
- oil/water or air cooler				---
- temperature and pressure sensors and instruments for monitoring and alarm				---
- proportional valve for flow control				---
- rotary union at impeller				---
- blade position sensor on diffuser				---
- control cabinet				---
- 2 Impeller casings				---
- 1 Intermediate section				---
- 1 inlet box				---
- 1 diffuser				---
- 1 drive coupling and guard				---
- 1 set of inlet and discharge expansion joints				---
- 2 sealing / cooling air fans				---
- 1 stall warning system with probes				---
- 1 special tool box, containing hand tools for mounting and dismounting of the impeller.				---
- assembly details				---
- instruction and operating manuals				---
- Enclousure for Lube Oil and Hydraulic Oil systems				
14000 HP, 900 RPM, Motor, WPII Enclosure 6.6 kV		Included	Included	---

Design Rating:

CFM	FTP (in. WG)	RPM	Temp. (Deg F)	Density (lb/ft3)	HP
1,930,000	36.00	890	330	0.0477	12688
1,600,000	26.00	890	320	0.0491	8057

Rotor Inertia:
198,294 lb-ft2

Rotor Weight:
29,104 lb

FOB: **Manufacturing Point Not Freight Allowed**

Flakt Woods Americas

Duty Point Datasheet

PF PFTV - Two Stage

Date:	: Tuesday, July 19, 2011	Project Name	: Unit 2
Fan Code	: PFTV-355-190-65	Quotation Number	: 410781
Item Reference:	:	Customer	: Sargent & Lundy

Customer Input Data

Fan Inlet Given As	Total Pressure	Inlet Area (Section A)	170.60 ft²	Fan Designation	Nodular Iron
Fan Outlet Given As	Total Pressure	Suction Box Inlet Area (Section B)	170.60 ft²	Fan Speed	890 rpm
Barometric Pressure	407.48 inwg	Diffuser Outlet Area (Section C)	138.68 ft²	Blade Tip Speed	32547 fpm
Elevation over sea level	0 ft	Outlet Area (Section D)	240.97 ft²	Fan Diameter / Size	3548 mm
				Blades	22

Duty Point Designation	Unit 2 Test Block - Hi Flow	Unit 2 SCR + FGD - Hi Flow	Unit 2 FGD Only - Hi Flow	Unit 2 Test Block - Low Flow
Blade Angle	79°	68°	64°	71°
Customer Input Data				
Actual Flow	1930000 cfm	1600000 cfm	1600000 cfm	1460000 cfm
Inlet Pressure @ "A"	-21.00 inwg total	-15.00 inwg total	-4.00 inwg total	-21.00 inwg total
Outlet Pressure @ "D"	15.00 inwg total	12.00 inwg total	11.00 inwg total	15.00 inwg total
Pressure Rise between "A" and "D"	36.00 inwg total	27.00 inwg total	15.00 inwg total	36.00 inwg total
Fan Selection Data				
Gas Inlet Temperature	330 °F	320 °F	320 °F	330 °F
Standard Density	0.075 lb/ft³	0.075 lb/ft³	0.075 lb/ft³	0.075 lb/ft³
Actual Density	0.0477 lb/ft³	0.0491 lb/ft³	0.0505 lb/ft³	0.0477 lb/ft³
Inlet Ancillary Loss "A" to "B"	0.00 inwg	0.00 inwg	0.00 inwg	0.00 inwg
Dynamic Pressure @ "B"	5.07 inwg	3.59 inwg	3.69 inwg	2.90 inwg
Total Pressure @ "B"	-21.00 inwg	-15.00 inwg	-4.00 inwg	-21.00 inwg
Total Pressure @ "C"	16.38 inwg	12.98 inwg	12.01 inwg	15.79 inwg
Connection Loss	1.38 inwg	0.98 inwg	1.01 inwg	0.79 inwg
Outlet Ancillary Loss	0.00 inwg	0.00 inwg	0.00 inwg	0.00 inwg
Outlet Static Pressure @ "D"	12.46 inwg	10.20 inwg	9.15 inwg	13.55 inwg
Outlet Total Pressure @ "D"	15.00 inwg	12.00 inwg	11.00 inwg	15.00 inwg
Outlet Dynamic Pressure @ "D"	2.54 inwg	1.80 inwg	1.85 inwg	1.45 inwg
Fan Pressure Rise (FP), "B" to "C"	37.38 inwg	27.98 inwg	16.01 inwg	36.79 inwg
Fan Efficiency (FE), "B" to "C"	87.0 %	85.6 %	68.0 %	89.2 %
Total Pressure Rise (FTP), "A" to "D"	36.00 inwg	27.00 inwg	15.00 inwg	36.00 inwg
Fan Total Efficiency (FTE), "A" to "D"	83.7 %	82.6 %	63.7 %	87.3 %
Fan Static Pressure (FSP), "A" to "D"	33.46 inwg	25.20 inwg	13.15 inwg	34.55 inwg
Fan Static Efficiency (FSE)	77.8 %	77.1 %	55.9 %	83.8 %
Static Pressure Rise (SPR)	38.53 inwg	28.79 inwg	16.84 inwg	37.45 inwg
Duty Shaft Power	12688 HP	8057 HP	5864 HP	9205 HP
Compressibility Factor	0.972	0.979	0.990	0.972

1110 Main Place Tower
Buffalo, NY , , 14202
Tel: 716-845-0500, Cell 716-536-8019 Fax: 716-845-5055

Website: www.flaktwoods.com
Email: jim.t.greenzweig@flaktwoods.com
Copyright Fläkt Woods Group 2003 - 2011

Flakt Woods Americas

Duty Point Datasheet

PF PFTV - Two Stage

Date:	: Tuesday, July 19, 2011	Project Name	: Unit 2
Fan Code	: PFTV-355-190-65	Quotation Number	: 410781
Item Reference:	:	Customer	: Sargent & Lundy

Customer Input Data

Fan Inlet Given As	Total Pressure	Inlet Area (Section A)	170.60 ft²	Fan Designation	Nodular Iron
Fan Outlet Given As	Total Pressure	Suction Box Inlet Area (Section B)	170.60 ft²	Fan Speed	890 rpm
Barometric Pressure	407.48 inwg	Diffuser Outlet Area (Section C)	138.68 ft²	Blade Tip Speed	32547 fpm
Elevation over sea level	0 ft	Outlet Area (Section D)	240.97 ft²	Fan Diameter / Size	3548 mm
				Blades	22

Duty Point Designation	Unit 2 SCR + FGD - Low Flow	Unit 2 FGD Only - Low Flow
Blade Angle	61°	57°
Customer Input Data		
Actual Flow	1250000 cfm	1250000 cfm
Inlet Pressure @ "A"	-15.00 inwg total	-4.00 inwg total
Outlet Pressure @ "D"	12.00 inwg total	11.00 inwg total
Pressure Rise between "A" and "D"	27.00 inwg total	15.00 inwg total
Fan Selection Data		
Gas Inlet Temperature	320 °F	320 °F
Standard Density	0.075 lb/ft³	0.075 lb/ft³
Actual Density	0.0491 lb/ft³	0.0505 lb/ft³
Inlet Ancillary Loss "A" to "B"	0.00 inwg	0.00 inwg
Dynamic Pressure @ "B"	2.19 inwg	2.25 inwg
Total Pressure @ "B"	-15.00 inwg	-4.00 inwg
Total Pressure @ "C"	12.60 inwg	11.61 inwg
Connection Loss	0.60 inwg	0.61 inwg
Outlet Ancillary Loss	0.00 inwg	0.00 inwg
Outlet Static Pressure @ "D"	10.90 inwg	9.87 inwg
Outlet Total Pressure @ "D"	12.00 inwg	11.00 inwg
Outlet Dynamic Pressure @ "D"	1.10 inwg	1.13 inwg
Fan Pressure Rise (FP), "B" to "C"	27.60 inwg	15.61 inwg
Fan Efficiency (FE), "B" to "C"	89.1 %	72.8 %
Total Pressure Rise (FTP), "A" to "D"	27.00 inwg	15.00 inwg
Fan Total Efficiency (FTE), "A" to "D"	87.2 %	69.9 %
Fan Static Pressure (FSP), "A" to "D"	25.90 inwg	13.87 inwg
Fan Static Efficiency (FSE)	83.6 %	64.6 %
Static Pressure Rise (SPR)	28.09 inwg	16.12 inwg
Duty Shaft Power	5962 HP	4175 HP
Compressibility Factor	0.978	0.989

1110 Main Place Tower
Buffalo, NY , , 14202
Tel: 716-845-0500, Cell 716-536-8019 Fax: 716-845-5055

Website: www.flaktwoods.com
Email: jim.t.greenzweig@flaktwoods.com
Copyright Fläkt Woods Group 2003 - 2011

Flakt Woods Americas

Performance Chart

PF PFTV - Two Stage

Project Name	: Unit 2	Date:	: Tuesday, July 19, 2011
Quotation Number	: 410781	Fan Code	: PFTV-355-190-65
Customer	: Sargent & Lundy	Item Reference:	:

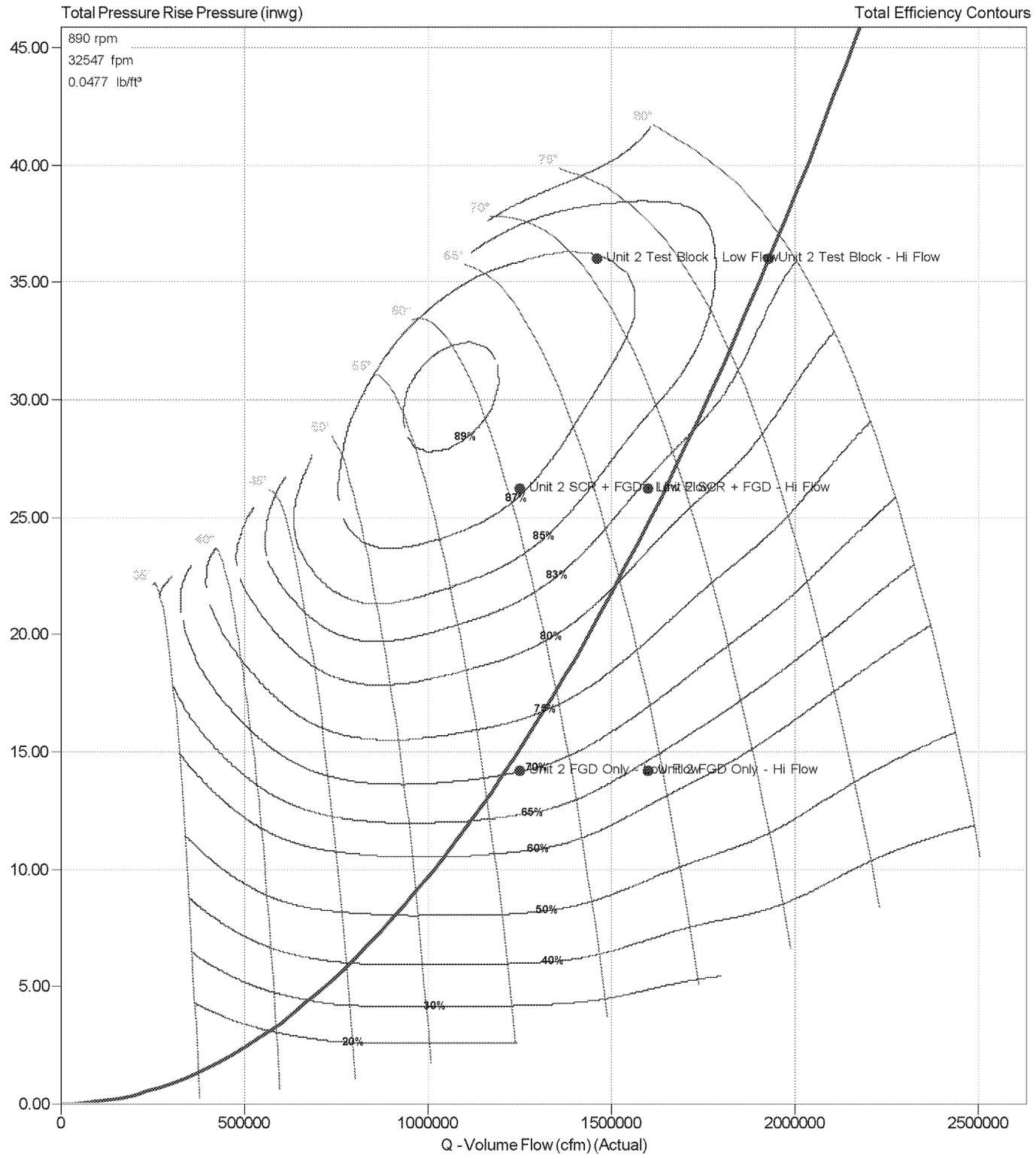

1110 Main Place Tower
Buffalo, NY , , 14202
Tel: 716-845-0500, Cell 716-536-8019 Fax: 716-845-5055

Website: www.flaktwoods.com
Email: jim.t.greenzweig@flaktwoods.com
Copyright Fläkt Woods Group 2003 - 2011

Flakt Woods Americas

Sound Datasheet

PF PFTV - Two Stage

Project Name	: Unit 2	Date:	: Tuesday, July 19, 2011
Quotation Number	: 410781	Fan Code	: PFTV-355-190-65
Customer	: Sargent & Lundy	Item Reference:	:

Duty Point Designation		**Unit 2 Test Block - Hi Flow**
Flow	1930000	cfm
Total Pressure Rise	36.00	inwg
Density	0.0477	lb/ft³
Compressibility	0.972	
Measuring Distance	10	ft
Requirement	85	dB(A)
Operating speed	890	rpm
Lws	38	dB

Sound power levels (dB re 10^{-12} W):

Sound Spectrum (Hz)	63	125	250	500	1k	2k	4k	8k	dB	dB(A)
Lwa	133	126	131	143	140	133	125	121	146	144
Lwc	118	117	117	127	119	112	100	84	129	126

Where:

Lwa - sound power level to outlet or inlet duct
Lwc - sound power level from fan connected to inlet and outlet ducts (motor not included)

Sound pressure levels (dB re $2*10^{-5}$ Pa):

Sound Spectrum (Hz)	63	125	250	500	1k	2k	4k	8k	dB	dB(A)
Lpc	94	93	93	103	95	88	76	60	105	101
300+al.1mm	-7	-9	-12	-18	-24	-24	-22	-21		
Lpc(isol)	87	84	81	85	71	64	54	39	91	83

Where:

Lpc - sound pressure level at the distance specified as measuring distance above from a ducted fan in free field over reflecting plane (motor sound and sound from sound reducing equipment are not included).

300 is the thickness in mm of the mineral wool of density 65-80kg/m3, and al means 1mm aluminium cover sheet

N.B. Octive band levels are linear (dB).

1110 Main Place Tower
Buffalo, NY , , 14202
Tel: 716-845-0500, Cell 716-536-8019 Fax: 716-845-5055
Website: www.flaktwoods.com
Email: jim.t.greenzweig@flaktwoods.com
Copyright Fläkt Woods Group 2003 - 2011

Flakt Woods Americas

Drawing and Dimensions

PF PFTV - Two Stage

Project Name	: Unit 2	Date:	: Tuesday, July 19, 2011
Quotation Number	: 410781	Fan Code	: PFTV-355-190-65
Customer	: Sargent & Lundy	Item Reference:	:

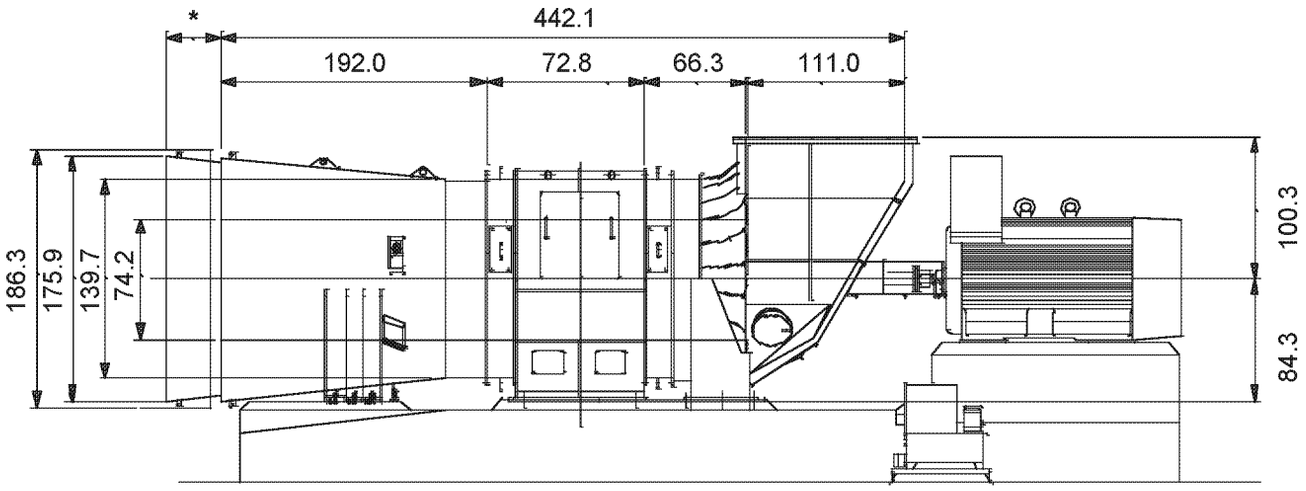

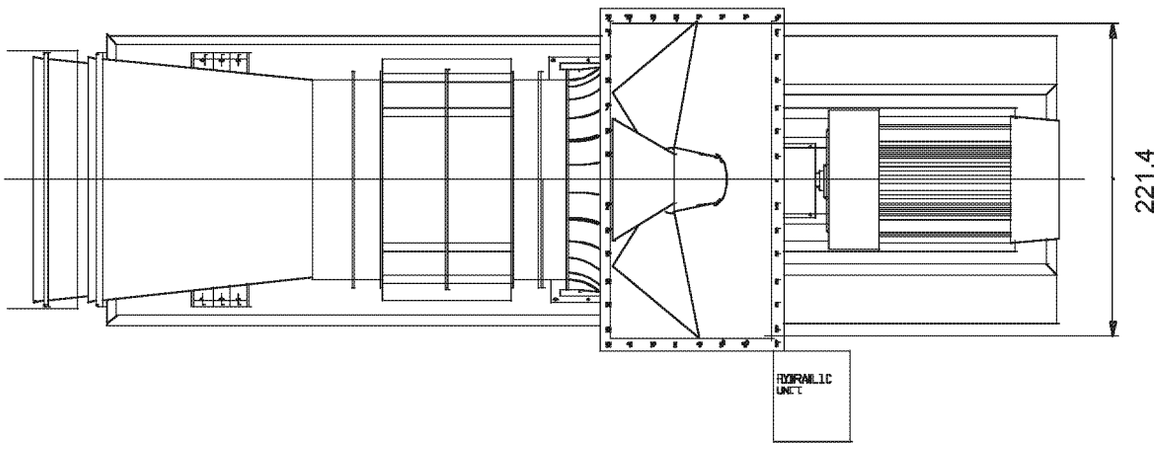

* 700 mm withdrawal space required.

Weights and dimensions are preliminary. Total Weight excludes motor and concrete.

1110 Main Place Tower
Buffalo, NY , , 14202
Tel: 716-845-0500, Cell 716-536-8019 Fax: 716-845-5055
Website: www.flaktwoods.com
Email: jim.t.greenzweig@flaktwoods.com
Copyright Fläkt Woods Group 2003 - 2011

FlaktWoods Americas

Fan Denomination Datasheet

PF PFTV - Two Stage

Date: : Tuesday, July 19, 2011
Fan Code : PFTV-355-190-65
Item Reference: :

Project Name : Unit 2
Quotation Number : 410781
Customer : Sargent & Lundy

Denomination	*Explanation*	*Legend/Formula*
Inlet area	Standard or user specified area at section A	$Area_A$
Outlet area	Standard or user specified area at section D	$Area_D$
Inlet pressure	User specified pressure at section A.	The user specifies static or total pressure
Outlet pressure	User specified pressure at section D.	The user specifies static or total pressure
Fan inlet static pressure	Static pressure at section A	Ps_A
Fan inlet dynamic (velocity) pressure	Dynamic pressure at section A	Pd_A
Fan inlet total pressure	Total pressure at section A	Pt_A
Fan outlet static pressure	Static pressure at section D	Ps_D
Fan outlet dynamic (velocity) pressure	Dynamic pressure at section D	Pd_D
Fan outlet total pressure	Total pressure at section D	Pt_D
Connection loss	Carnot loss between C and D	Connection loss
Diffuser outlet dynamic pressure	Dynamic pressure at section C	Pd_C
Diffuser outlet total pressure	Total pressure at section C	Pt_C
Inlet ancillary loss	User specified extra loss between section A and B e.g. an inlet sound absorber.	ΔP_{inlet}
Outlet ancillary loss	User specified extra loss between section C and D.	ΔP_{outlet}
Total pressure rise, FTP	Total pressure rise between section A and D.	$Pt_D - Pt_A$
Fan pressure rise, FP	Total pressure rise between section B and C.	$Pt_C - Pt_B$
Fan static pressure, FSP	Static pressure at section D - total pressure at section A.	$Ps_D - Pt_A$
Static pressure rise, SPR	Static pressure rise between section A and D.	$Ps_D - Ps_A$
Shaft power	Fan shaft power required to rotate the fan.	
Fan efficiency, FE	Fan efficiency based on FP	Flow * FP * CF / Shaft Power
Fan total efficiency, FTE	Fan efficiency based on FTP	Flow * FTP * CF / Shaft Power
Fan static efficiency, FSE	Fan efficiency based on FSP	Flow * FSP * CF / Shaft Power
Compressibility factor, CF	Factor used to compensate for gas compressibility.	

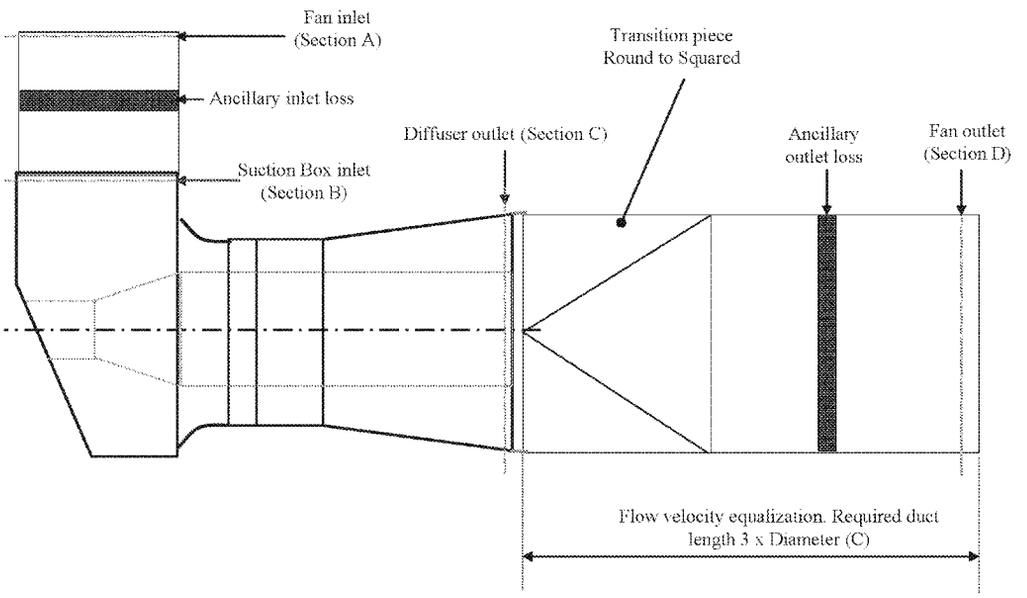

1110 Main Place Tower
Buffalo, NY , , 14202
Tel: 716-845-0500, Cell 716-536-8019 Fax: 716-845-5055

Website: www.flaktwoods.com
Email: jim.t.greenzweig@flaktwoods.com
Copyright Fläkt Woods Group 2003 - 2011

FläktWoods

Speed vs. Torque Curve

Customer: Sargent & Lundy
Project: Unit 2
Reference: FlaktWoods Proposal 410781
Unit Tag #: (2) Single Speed Axial ID Fans per Unit
Fan : PFTV-355-190-65
Stages: Two Stage Axial Fan
Blade Type: Nodular Iron Blades
Drawing Number : 410781 ST

		RPM	HP	Torque ft-lb	Temp.	
Blades	Closed	890	1,322	7,797	330	ºF
Blades	Closed	890	2,270	13,391	0	ºF

Fan WK² : 198,294 lb-ft2
Bearing Type : Sleeve

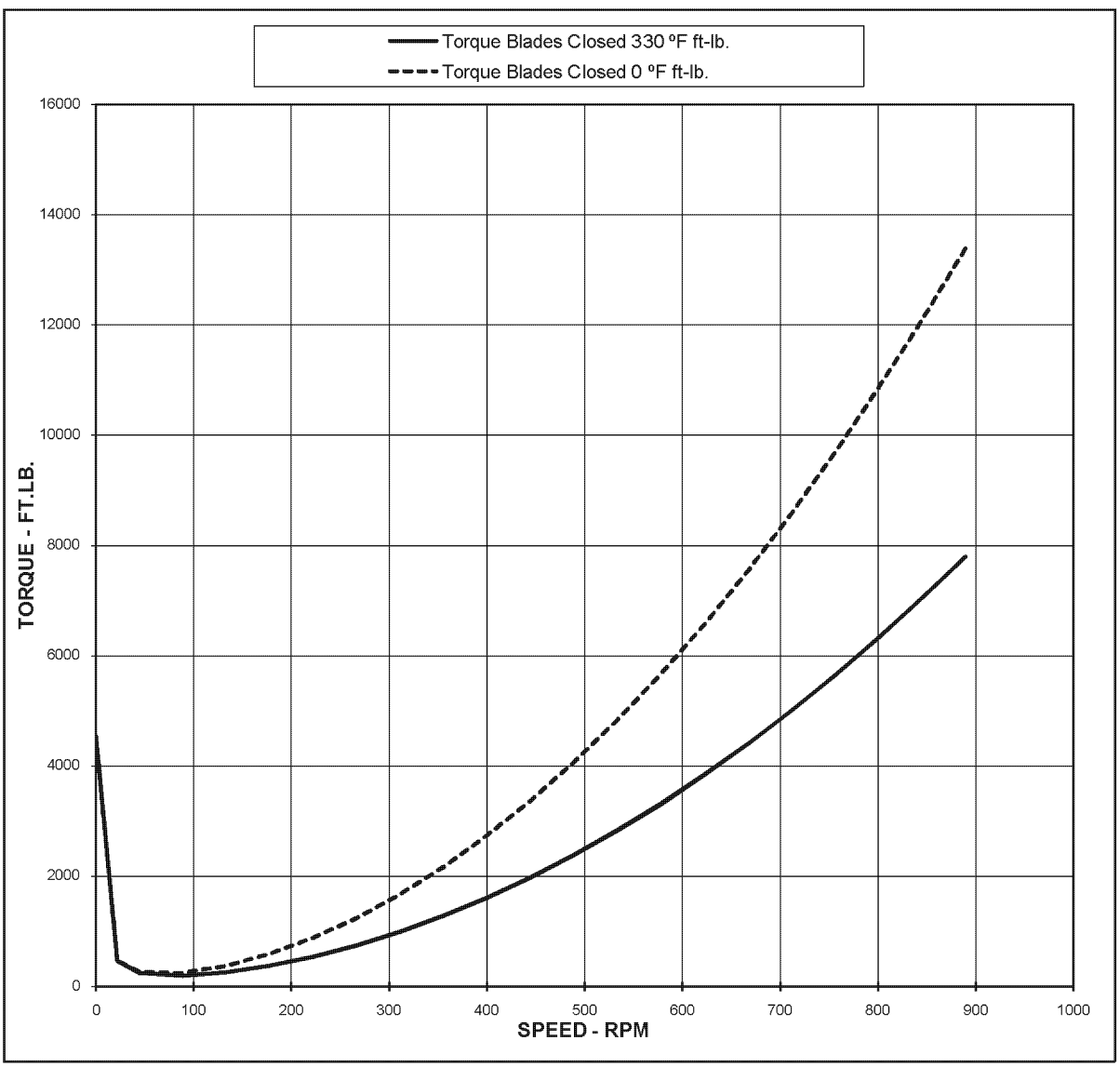

Axial-Spd Torq
7/22/2011

Buffalo Office
1110 Main Place Tower
Buffalo, NY 14202

FOB
Prices quoted are in US dollars and are FOB Manufacturing Point, Not Freight Allowed

Terms of Payment

Quotation is valid for 30 days. Pricing on this proposal is firm for delivery as quoted.
FlaktWoods offers "net 30" day terms based on progress payments described (percent of contract Price) as follows:

Value	Milestone
10%	With Purchase Order
10%	On delivery of Drawings for Approval
20%	On release for fabrication by Purchaser
40%	On purchase of raw materials as evidenced by unpriced copies of our suborders
20%	On Seller's shipment of equipment as evidenced by Seller's invoice, packing list, and inland bill of lading.

Confidentiality and Proprietary Information

Notice To Recipient of Proposal:

In consideration of FlaktWoods (hereinafter "FW") preparation of this proposal and disclosure of certain proprietary information, its recipient agrees to treat as confidential all FW proprietary information disclosed herein. Such proprietary information includes, but is not limited to, all technical requirements, specification, prints, and information relating to the description and operation of the system which is the subject of this proposal, its components, equipment, options and related services, designs, processes, techniques, documentation, pricing, installation, and safety. The recipient further acknowledges that FW proprietary information is unique and valuable, was developed or acquired by FW at substantial expense, and is the subject of efforts by FW to maintain the secrecy thereof.
The recipient agrees not to reverse engineer, to use or to disclose this proprietary information to any person or party without the prior written consent of FW. This agreement is effective between the recipient and FW regardless of whether the parties enter into a contract for sale of the goods or services that are the subject matter of this proposal.

© Copyright 2011, FlaktWoods. An unpublished work. All rights reserved.
This document may be reproduced as required only for the internal use of its recipient in evaluation of this proposal.

Additional terms and conditions are on the attached FlaktWoods Conditions of Sale, form FWTC013002.

FLAKTWOODS
GENERAL TERMS AND CONDITIONS OF SALE

1. General. The terms and conditions contained herein, together with any additional or different terms contained in FW's Proposal, if any, submitted to Purchaser (which Proposal shall control over any conflicting terms), constitute the entire agreement (the "Agreement") between the parties with respect to the order and supersede all prior communications and agreements regarding the order. Acceptance by FW of the order, or Purchaser's acceptance of FW's Proposal, is expressly limited to and conditioned upon Purchaser's acceptance of these terms and conditions, payment for or acceptance of any performance by FW being acceptance. These terms and conditions may not be changed or superseded by any different or additional terms and conditions proposed by Purchaser to which terms FW hereby objects. Unless the context otherwise requires, the term "Equipment" as used herein means all of the equipment, parts, accessories sold, and all software and software documentation, if any, licensed to Purchaser by FW ("Software") under the order. Unless the context otherwise requires, the term "Services" as used herein means all labor, supervisory, technical and engineering, installation, repair, consulting or other services provided by FW under the order. As used herein, the term "Purchaser" shall include the initial end use of the Equipment and/or services; provided, however, that Paragraph 13(a) shall apply exclusively to the initial end user.

2. Prices.
(a) Unless otherwise specified in writing, all Proposals expire thirty (30) days from the date thereof.
(b) Unless otherwise stated herein, Services prices are based on normal business hours (8 a.m. to 5 p.m. Monday through Friday). Overtime and Saturday hours will be billed at one and one-half (1 1/2) times the hourly rate; and Sunday hours will be billed at two (2) times the hourly rate; holiday hours will be billed at three (3) times the hourly rate. If a Services rate sheet is attached hereto, the applicable Services rates shall be those set forth in the rate sheet. Rates are subject to change without notice.
(c) The price does not include any federal, state or local property, license, privilege, sales, use, excise, gross receipts, or other like taxes which may now or hereafter be applicable. Purchaser agrees to pay or reimburse any such taxes which FW or its suppliers are required to pay or collect. If Purchaser is exempt from the payment of any tax or holds a direct payment permit, Purchaser shall, upon order placement, provide FW a copy, acceptable to the relevant governmental authorities of any such certificate or permit.
(d) The price includes customs duties and other importation or exportation fees, if any, at the rates in effect on the date of FW's Proposal. Any change after that date in such duties, fees, or rates, shall increase the price by FW's additional cost.

3. Payment.
(a) Unless specified to the contrary in writing by FW, payment terms are net cash, payable without offset, in United States Dollars, 30 days from date of invoice by wire transfer to the account designated by FW in the Proposal.
(b) If in the judgment of FW the financial condition of Purchaser at any time prior to delivery does not justify the terms of payment specified, FW may require payment in advance, payment security satisfactory to FW, or may terminate the order, whereupon FW shall be entitled to receive reasonable cancellation charges. If delivery is delayed by Purchaser, payment shall be due on the date FW is prepared to make delivery. Delays in delivery or nonconformities in any installments delivered shall not relieve Purchaser of its obligation to accept and pay for remaining installments.
(c) Purchaser shall pay, in addition to the overdue payment, a late charge equal to the lesser of 1 1/2% per month or any part thereof or the highest applicable rate allowed by law on all such overdue amounts plus FW's attorneys' fees and court costs incurred in connection with collection.

4. Changes.
(a) Any changes requested by Purchaser affecting the ordered scope of work must be accepted by FW and resulting adjustments to affected provisions, including price, schedule, and guarantees mutually agreed in writing prior to implementation of the change.
(b) FW may, at its expense, make such changes in the Equipment or Services as it deems necessary, in its sole discretion, to conform the Equipment or Services to the applicable specifications. If Purchaser objects to any such changes, FW shall be relieved of its obligation to conform to the applicable specifications to the extent that conformance may be affected by such objection.

5. Delivery.
(a) All Equipment manufactured, assembled or warehoused in the continental United States is delivered F.O.B. point of shipment. Equipment shipped from outside the continental United States is delivered F.O.B. United States port of entry. Purchaser shall be responsible for any and all demurrage or detention charges.
(b) If the scheduled delivery of Equipment is delayed by Purchaser or by Force Majeure, FW may move the Equipment to storage for the account of and at the risk of Purchaser whereupon it shall be deemed to be delivered.
(c) Shipping and delivery dates are contingent upon Purchaser's timely approvals and delivery by Purchaser of any documentation required for FW's performance hereunder.
(d) Claims for shortages or other errors in delivery must be made in writing to FW within ten days of delivery. Equipment may not be returned except with the prior written consent of and subject to terms specified by FW. Claims for damage after delivery shall be made directly by Purchaser with the common carrier

6. Title & Risk of Loss. Except with respect to Software (for which title shall not pass, use being licensed) title to Equipment shall remain in FW until fully paid for. Notwithstanding any agreement with respect to delivery terms or payment of transportation charges, risk of loss or damage shall pass to Purchaser upon delivery.

7. Inspection, Testing and Acceptance.
(a) Any inspection by Purchaser of Equipment on FW's premises shall be scheduled in advance to be performed during normal working hours.
(b) If the order provides for factory acceptance testing, FW shall notify Purchaser when FW will conduct such testing prior to shipment. Unless Purchaser states specific objections in writing within ten (10) days after completion of factory acceptance testing, completion of the acceptance test constitutes Purchaser's factory acceptance of the Equipment and its authorization for shipment.
(c) If the order provides for site acceptance testing, testing will be performed by FW personnel to verify that the Equipment has arrived at site complete, without physical damage, and in good operating condition. Completion of site acceptance testing constitutes full and final acceptance of the Equipment. If, through no fault of FW, acceptance testing is not completed within thirty (30) days after arrival of the Equipment at the site, the site acceptance test shall be deemed completed and the Equipment shall be deemed accepted.

8. Warranties and Remedies.
(a) Equipment and Services Warranty. FW warrants that Equipment (excluding Software, which is warranted as specified in paragraph (d) below) shall be delivered free of defects in material and workmanship and that Services shall be free of defects in workmanship. The Warranty Remedy Period for Equipment (excluding Software, Spare Parts and Refurbished or Repaired Parts) shall end twelve (12) months after installation or eighteen (18) months after date of shipment, whichever first occurs. The Warranty Remedy Period for new spare parts shall end twelve (12) months after date of shipment. The Warranty Remedy Period for refurbished or repaired parts shall end ninety (90) days after date of shipment. The Warranty Remedy Period for Services shall end ninety (90) days after the date of completion of Services.
(b) Equipment and Services Remedy. If a nonconformity to the foregoing warranty is discovered in the Equipment or Services during the applicable Warranty Remedy Period, as specified above, under normal and proper use and provided the Equipment has been properly stored, installed, operated and maintained and written notice of such nonconformity is provided to FW promptly after such discovery and within the applicable Warranty Remedy Period, FW shall, at its option, either (i) repair or replace the nonconforming portion of the Equipment or re-perform the nonconforming Services or (ii) refund the portion of the price applicable to the nonconforming portion of Equipment or Services. If any portion of the Equipment or Services so repaired, replaced or re-performed fails to conform to the foregoing warranty, and written notice of such nonconformity is provided to FW promptly after discovery and within the original Warranty Remedy Period applicable to such Equipment or Services or 30 days from completion of such repair, replacement or re-performance, whichever is later, FW will repair or replace such nonconforming Equipment or re-perform the nonconforming Services. The original Warranty Remedy Period shall not otherwise be extended.
(c) Exceptions. FW shall not be responsible for providing working access to the nonconforming Equipment, including disassembly and re-assembly of non-FW supplied equipment, or for providing transportation to or from any repair facility, all of which shall be at Purchaser's risk and expense. FW shall have no obligation hereunder with respect to any Equipment which (i) has been improperly repaired or altered; (ii) has been subjected to misuse, negligence or accident; (iii) has been used in a manner contrary to FW's instructions; (iv) is comprised of materials provided by or a design specified by Purchaser; or (v) has failed as a result of ordinary wear and tear. Equipment supplied by FW but manufactured by others is warranted only to the extent of the manufacturer's warranty, and only the remedies, if any, provided by the manufacturer will be allowed.
(d) Software Warranty and Remedies. FW warrants that, except as specified below, the Software will, when properly installed, execute in accordance with FW's published specification. If a nonconformity to the foregoing warranty is discovered during the period ending one (1) year after the date of shipment and written notice of such nonconformity is provided to FW promptly after such discovery and within that period, including a description of the nonconformity and complete information about the manner of its discovery, FW shall correct the nonconformity by, at its option, either (i) modifying or making available to the Purchaser instructions for modifying the Software; or (ii) making available at FW's facility necessary corrected or replacement programs. FW shall have no obligation with respect to any nonconformities resulting from (i) unauthorized modification of the Software or (ii) Purchaser-supplied software or interfacing. FW does not warrant that the functions contained in the software will operate in combinations which may be selected for use by the Purchaser, or that the software products are free from errors in the nature of what is commonly categorized by the computer industry as "bugs".
(e) THE FOREGOING WARRANTIES ARE EXCLUSIVE AND IN LIEU OF ALL OTHER WARRANTIES OF QUALITY AND PERFORMANCE, WHETHER WRITTEN, ORAL OR IMPLIED, AND ALL OTHER WARRANTIES INCLUDING ANY IMPLIED WARRANTIES OF MERCHANTABILITY OR FITNESS FOR A PARTICULAR PURPOSE OR USAGE OF TRADE ARE HEREBY DISCLAIMED. THE REMEDIES STATED HEREIN CONSTITUTE PURCHASER'S EXCLUSIVE REMEDIES AND FW'S ENTIRE LIABILITY FOR ANY BREACH OF WARRANTY.

9. Patent Indemnity.
(a) FW shall defend at its own expense any action brought against Purchaser alleging that the Equipment or the use of the Equipment to practice any process for which such Equipment is specified by FW (a "Process") directly infringes any claim of a patent of the United States of America and to pay all damages and costs finally awarded in any such

action, provided that Purchaser has given FW prompt written notice of such action; all necessary assistance in the defense thereof and the right to control all aspects of the defense thereof including the right to settle or otherwise terminate such action in behalf of Purchaser.
(b) FW shall have no obligation hereunder and this provision shall not apply to: (i) any other equipment or processes, including Equipment or Processes which have been modified or combined with other equipment or process not supplied by FW; (ii) any Equipment or Process supplied according to a design, other than an FW design, required by Purchaser; (iii) any products manufactured by the Equipment or Process; (iv) any patent issued after the date hereof; or (v) any action settled or otherwise terminated without the prior written consent of FW.
(c) If, in any such action, the Equipment is held to constitute an infringement, or the practice of any Process using the Equipment is finally enjoined, FW shall, at its option and its own expense, procure for Purchaser the right to continue using said Equipment; or modify or replace it with non-infringing equipment or, with Purchaser's assistance, modify the Process so that it becomes non-infringing; or remove it and refund the portion of the price allocable to the infringing Equipment. THE FOREGOING PARAGRAPHS STATE THE ENTIRE LIABILITY OF FW AND EQUIPMENT MANUFACTURER FOR ANY PATENT INFRINGEMENT.
(d) To the extent that said Equipment or any part thereof is modified by Purchaser, or combined by Purchaser with equipment or processes not furnished hereunder (except to the extent that FW is a contributory infringer) or said Equipment or any part thereof is used by Purchaser to perform a process not furnished hereunder by FW or to produce an article, and by reason of said modification, combination, performance or production, an action is brought against FW, Purchaser shall defend and indemnify FW in the same manner and to the same extent that FW would be obligated to indemnify Purchaser under this "Patent Indemnity" provision.

10. Limitation of Liability.
(a) In no event shall FW, its suppliers or subcontractors be liable for special, indirect, incidental or consequential damages, whether in contract, warranty, tort, negligence, strict liability or otherwise, including, but not limited to, loss of profits or revenue, loss of use of the Equipment or any associated equipment, cost of capital, cost of substitute equipment, facilities or services, downtime costs, delays, and claims of customers of the Purchaser or other third parties for any damages. FW's liability for any claim whether in contract, warranty, tort, negligence, strict liability, or otherwise for any loss or damage arising out of, connected with, or resulting from this Agreement or the performance or breach thereof, or from the design, manufacture, sale, delivery, resale, repair, replacement, installation, technical direction of installation, inspection, operation or use of any equipment covered by or furnished under this Agreement, or from any services rendered in connection therewith, shall in no case (except as provided in the section entitled "Patent Indemnity") exceed one-half (1/2) of the purchase price allocable to the Equipment or part thereof or Services which gives rise to the claim.
(b) All causes of action against FW arising out of or relating to this Agreement or the performance or breach hereof shall expire unless brought within one year of the time of accrual thereof.
(c) In no event, regardless of cause, shall FW be liable for penalties or penalty clauses of any description or for indemnification of Purchaser or others for costs, damages, or expenses arising out of or related to the Equipment and/Services.

11. Laws and Regulations. FW does not assume any responsibility for compliance with federal, state or local laws and regulations, except as expressly set forth herein, and compliance with any laws and regulations relating to the operation or use of the Equipment or Software is the sole responsibility of the Purchaser. All laws and regulations referenced herein shall be those in effect as of the Proposal date. In the event of any subsequent revisions or changes thereto, FW assumes no responsibility for compliance therewith. If Purchaser desires a modification as a result of any such change or revision, it shall be treated as a change per Article 4. Nothing contained herein shall be construed as imposing responsibility or liability upon FW for obtaining any permits, licenses or approvals from any agency required in connection with the supply, erection or operation of the Equipment. This Agreement shall be governed by the laws of the State of New York, but excluding the provisions of the United Nations Convention on Contracts for the International Sale of Goods and excluding New York law with respect to conflicts of law. Purchaser agrees that all causes of action against FW under this Agreement shall be brought in the State Courts of the State of New York, or the U.S. District Court for the Southern District of New York. If any provision hereof, partly or completely, shall be held invalid or unenforceable, such invalidity or unenforceability shall not affect any other provision or portion hereof and these terms shall be construed as if such invalid or unenforceable provision or portion thereof had never existed.

12. OSHA. FW warrants that the Equipment will comply with the relevant standards of the Occupational Safety and Health Act of 1970 ("OSHA") and the regulations promulgated thereunder as of the date of the Proposal. Upon prompt written notice from the Purchaser of a breach of this warranty, FW will replace the affected part or modify it so that it conforms to such standard or regulation. FW's obligation shall be limited to such replacement or modification. In no event shall FW be responsible for liability arising out of the violation of any OSHA standards relating to or caused by Purchaser's design, location, operation, or maintenance of the Equipment, its use in association with other equipment of Purchaser, or the alteration of the Equipment by any party other than FW.

13. Software License.
(a) FW owns all rights in or has the right to sublicense all of the Software, if any, to be delivered to Purchaser under this Agreement. As part of the sale made hereunder Purchaser hereby obtains a limited license to use the Software, subject to the following: (i) The Software may be used only in conjunction with equipment specified by FW; (ii) The Software shall be kept strictly confidential; (iii) The Software shall not be copied, reverse engineered, or modified; (iv) The Purchaser's right to use the Software shall terminate immediately when the specified equipment is no longer used by the Purchaser or when otherwise terminated, e.g. for breach, hereunder, and (v) the rights to use the Software are non-exclusive and non-transferable, except with FW's prior written consent.
(b) Nothing in this Agreement shall be deemed to convey to Purchaser any title to or ownership in the Software or the intellectual property contained therein in whole or in part, nor to designate the Software a "work made for hire" under the Copyright Act, nor to confer upon any person who is not a named party to this Agreement any right or remedy under or by reason of this Agreement. In the event of termination of this License, Purchaser shall immediately cease using the Software and, without retaining any copies, notes or excerpts thereof, return to FW the Software and all copies thereof and shall remove all machine readable Software from all of Purchaser's storage media.

14. Inventions and Information. Unless otherwise agreed in writing by FW and Purchaser, all right, title and interest in any inventions, developments, improvements or modifications of or for Equipment and Services shall remain with FW. Any design, manufacturing drawings or other information submitted to the Purchaser remains the exclusive property of FW. Purchaser shall not, without FW's prior written consent, copy or disclose such information to a third party. Such information shall be used solely for the operation or maintenance of the Equipment and not for any other purpose, including the duplication thereof in whole or in part.

15. Force Majeure. FW shall neither be liable for loss, damage, detention or delay nor be deemed to be in default for failure to perform when prevented from doing so by causes beyond its reasonable control including but not limited to acts of war (declared or undeclared), Acts of God, fire, strike, labor difficulties, acts or omissions of any governmental authority or of Purchaser, compliance with government regulations, insurrection or riot, embargo, delays or shortages in transportation or inability to obtain necessary labor, materials, or manufacturing facilities from usual sources or from defects or delays in the performance of its suppliers or subcontractors due to any of the foregoing enumerated causes. In the event of delay due to any such cause, the date of delivery will be extended by period equal to the delay plus a reasonable time to resume production, and the price will be adjusted to compensate FW for such delay.

16. Cancellation. Any order may be cancelled by Purchaser only upon prior written notice and payment of termination charges, including but not limited to, all costs identified to the order incurred prior to the effective date of notice of termination and all expenses incurred by FW attributable to the termination, plus a fixed sum of ten (10) percent of the final total price to compensate for disruption in scheduling, planned production and other indirect costs.

17. Termination. No termination by Purchaser for default shall be effective unless, within fifteen (15) days after receipt by FW of Purchaser's written notice specifying such default, FW shall have failed to initiate and pursue with due diligence correction of such specified default.

18. Export Control.
(a) Purchaser represents and warrants that the Equipment and Services provided hereunder and the "direct product" thereof are intended for civil use only and will not be used, directly or indirectly, for the production of chemical or biological weapons or of precursor chemicals for such weapons, or for any direct or indirect nuclear end use. Purchaser agrees not to disclose, use, export or re-export, directly or indirectly, any information provided by FW or the "direct product" thereof as defined in the Export Control Regulations of the United States Department of Commerce, except in compliance with such Regulations.
(b) If applicable, FW shall file for a U.S. export license, but only after appropriate documentation for the license application has been provided by Purchaser. Purchaser shall furnish such documentation within a reasonable time after order acceptance. Any delay in obtaining such license shall suspend performance of this Agreement by FW. If an export license is not granted or, if once granted, is thereafter revoked or modified by the appropriate authorities, this Agreement may be canceled by FW without liability for damages of any kind resulting from such cancellation. At FW's request, Purchaser shall provide to FW a Letter of Assurance and End-User Statement in a form reasonably satisfactory to FW.

19. Assignment. Any assignment of this Agreement or of any rights or obligations under the Agreement without prior written consent of FW shall be void.

20. Nuclear Insurance – Indemnity. For applications in nuclear projects, the Purchaser and/or its end user customer shall have complete insurance protection against liability and property damage resulting from a nuclear incident to and shall indemnify FW, its subcontractors, suppliers and vendors against all claims resulting from a nuclear incident.

21. Resale. If Purchaser resells any of the Equipment, the sale terms shall limit FW's liability to the buyer to the same extent that FW's liability to Purchaser is limited hereunder.

22. Entire Agreement. This Agreement constitutes the entire agreement between FW and Purchaser. There are no agreements, understandings, restrictions, warranties, or representations between FW and Purchaser other than those set forth herein or herein provided.

FWTC013002

Aquatech
International Corporation
One-Four Coins Drive
Canonsburg, PA 15317 USA
t) 724 746 5300
f) 724 746 5359
www.aquatech.com

August 15, 2011

Sargent & Lundy
55 East Monroe Street
Chicago, IL 60603-5780

ATTENTION: **Mr. Mike Rosen**

SUBJECT: **NPPD Gerald Gentleman Station FGD ZLD System**
AIC # 11-1104

Dear Mike,

Aquatech appreciates the request for quotation on this FGD ZLD system for the NPPD Gerald Gentleman Station. Here is the budget proposal per your request.

FGD ZLD System:

Since the FGD wastewater flow rate is very low (10 gpm), we recommend the following process: Lime Soda Softening Clarifier – followed by a – FCC (Forced Circulation Crystallizer).

Following is the preliminary scope of supply:

Description	Qty	Capacity	Design Criteria[2]	Detail Design	Supply
Pre-Treatment					
Lime Soda Softening Clarifier	1	100%	X	X	X
Lime Silo	1	100%	X	X	X
Lime dosing system	1	100%	X	X	X
Soda Ash Silo	1	100%	X	X	X
Soda Ash dosing system	1	100%	X	X	X
Coagulant dosing system	1	100%	X	X	X
Coagulant tank	1	100%	X	X	X

Aquatech
International Corporation
One-Four Coins Drive
Canonsburg, PA 15317 USA
t) 724 746 5300
f) 724 746 5359
www.aquatech.com

Description	Qty	Capacity	Design Criteria[2]	Detail Design	Supply
Flocculant dosing system	1	100%	X	X	X
Flocculant tank	1	100%	X	X	X
Sludge Transfer Pumps	2	100%	X	X	X
Sludge Thickener	1	100%	X	X	X
Filter Press Feed Pumps	2	100%	X	X	X
Plate & Frame Filter Press	1	100%	O	O	O
Forced Circulation Crystallizer					
FC Feed Tank and Mixer	1	100%	X	X	X
FC Feed Pump	1	100%	X	X	X
Flash Tank	1	100%	X	X	X
Foam Separator	1	100%	X	X	X
FC Heat Exchanger	1	100%	X	X	X
FC Vapor Compressor	1	100%	X	X	X
FC Recirculation Pump	1	100%	X	X	X
FC Distillate Hotwells	1	100%	X	X	X
FC Distillate Pump	2	100%	X	X	X
FC Antifoam Dosing Pumps (Skid Mounted)	2	100%	X	X	X
Process Piping, & Ducting within Battery Limit	Lot		X	X	X
Instruments	Lot		X	X	X
Manual, Control, and Relief Valves within Battery Limits	Lot		X	X	X
Belt Filter Press (BFP)					
BFP Feed Tank and Mixer	1	100%	X	X	X
BFP Feed Pump	1	100%	X	X	X

Aquatech
International Corporation
One-Four Coins Drive
Canonsburg, PA 15317 USA
t) 724 746 5300
f) 724 746 5359
www.aquatech.com

Description	Qty	Capacity	Design Criteria[2]	Detail Design	Supply
Belt Filter Press	1	100%	X	X	X
Electrical Equipment					
Motors (Compressor, Pumps, Mixers)	Lot	---	X	X	X
MV Switchgear	Lot	---	O	O	O
MV-LV Transformer	Lot	---	O	O	O
LV Motor Starters/VFD/MCC	Lot	---	O	O	O
L V Power Panel	Lot	---	O	O	O
Transformers	Lot	---	O	O	O
Aux Panel for MV Switchgear	Lot	---	O	O	O
Single Phase Power panel	Lot	---	O	O	O
Electric Lighting Equipment	Lot	---	O	O	O
Lightning Protection System	Lot	--	O	O	O
Electrical and Pneumatic Installation-On Skids	Lot	---	X	X	X
Control & Instrument Wiring, Conduit,	Lot		O	O	O
Power Wiring > 120 V, Cable, Conduit	Lot		X	X	X
Skid Mounted Junction Boxes	Lot		X	X	X
Pneumatic Tubing, Fittings, Trays					
Electrical and Pneumatic Installation-Outside Skids	Lot	---	O	O	O
Instrument Wiring, Cables, Trays	Lot		O	O	O
Power Wiring, Cable, Conduit	Lot		O	O	O

Aquatech
International Corporation
One-Four Coins Drive
Canonsburg, PA 15317 USA
t) 724 746 5300
f) 724 746 5359
www.aquatech.com

Description	Qty	Capacity	Design Criteria[2]	Detail Design	Supply
Control wiring/ cabling, trays, raceways Junction Boxes Pneumatic Tubing, Fittings, Trays	Lot Lot		O O	O O	O O
Structural Supports	Lot	---	X	X	X
Access Ladders, Platforms	Lot	---	X	X	X
Thermal Insulation	Lot	---	X	O	O
Heat Tracing	Lot	---	X	O	O
Prime Painting of Equipment	Lot	---	X	X	X
Manual, Control, and Relief Valves	Lot		X	X	X
Control System					
Control Cabinet/Panel	1	---	X	X	X
PLC System (c/w CPU, HW & SW etc)	Lot	---	X	X	X
Desk Top HMI (C/w Software)	1	---	X	X	X
HMI Operator Console	1	---	X	X	X
Printer for HMI Computer	1	---	O	O	O
Uninterrupted Power Supply (Panel Mounted)	1	---	O	O	O
Data Highway Communication to DCS	1	---	O	O	O
TESTING, SURVEYS, INSPECTION					
Shop Hydrostatic Testing	Lot				X
Vessel Certification to ASME Section VIII	Lot				X[3]
QC Inspections	Lot				X
Non-destructive Examination	N/A				
Shop Performance Testing	N/A				
Field Performance Testing	Lot				X

Aquatech
International Corporation
One-Four Coins Drive
Canonsburg, PA 15317 USA
t) 724 746 5300
f) 724 746 5359
www.aquatech.com

Description	Qty	Capacity	Design Criteria[2]	Detail Design	Supply
CONSTRUCTION					
Temporary Facilities	Lot		O	O	O
Site Grading	Lot		O	O	O
Civil/Foundation Work	Lot		O	O	O
Buildings, Architectural, HVAC	Lot		O	O	O
Job Site Unloading, Storage, and Protection	Lot		O	O	O
Installation/Erection Labor, Materials, and Equipment	Lot		O	O	O
Electrical Installation Labor, Materials, and Equipment	Lot		O	O	O
SERVICES					
Packing and Marking for Shipment	Lot				X
Installation Supervision	Lot				Option
Start-up and Performance Testing Supervision	Lot				Option
Training of Permanent O & M Personnel	Lot				Option
Permits	Lot				O
Drawings and Manuals (10 Sets)	Lot				X
CONSUMABLES					
Commissioning, Testing Spare Parts	Lot				X
First Fill of Permanent Lubricants and Chemicals	Lot				O
MV and LV Electric Power, Cooling Water, Steam, demin water, for Construction, Checkout and Testing, Start-up, Performance Testing, and Operation	Lot				O

Aquatech
International Corporation
One-Four Coins Drive
Canonsburg, PA 15317 USA
t) 724 746 5300
f) 724 746 5359
www.aquatech.com

Notes:

1. Design criteria do not include detail drawings or Bills of Material. Design criteria may be specified in the Technical Manual. They do not incorporate local laws, codes, or regulations not known to Aquatech.
2. Scope of supply indicated above is for supply proposal only. Please refer another section for detail scope of work pertaining to the construction/installation part.
3. Please refer to Aquatech inspection & test plan (ITP) for inspection and test details included in the scope.
4. Only pressure vessels with design ratings above 15 psig will be stamped in accordance with Section VIII of the ASME Code.

BUDGET PRICE (Equipment supply only): US $ 4,900,000
Ex-works Supply

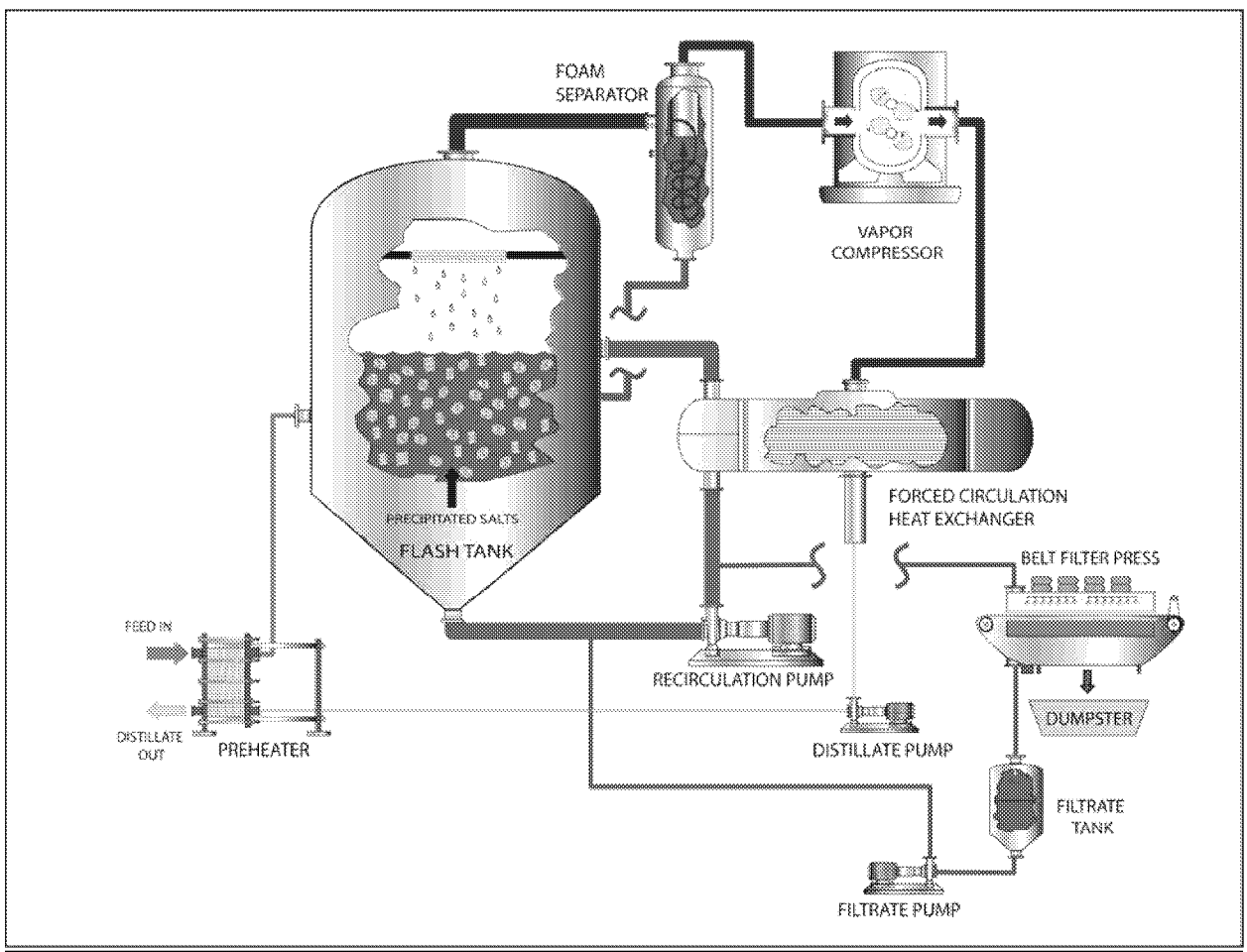

From Innovation Flows Leadership

Aquatech
International Corporation
One-Four Coins Drive
Canonsburg, PA 15317 USA
t) 724 746 5300
f) 724 746 5359
www.aquatech.com

EXCLUSIONS:

The scope of supply by Aquatech International Corporation is as defined in this proposal. The work to be performed in the field by others is:

1) Receive, unload, store and install the equipment to be supplied by Aquatech International Corporation.
2) Supply & Install inter-connecting piping and pipe supports outside skid envelopes.
3) Install electric power supply connections and feeders to all junction boxes and the control panel / Motor terminals, heaters.
4) Supply of MCC. VFD or soft start for pumps. Single phase local starters would be provided by Aquatech.
5) Carry out field erection, installation and construction.
6) Furnish and install heat tracing and/or insulation, where and if required.
7) Perform necessary civil or structural work such as foundations, embedded steel, anchor bolts, clips, etc.
8) Furnish and delivery the following utilities to each of the necessary skids:
9) 460/3/60 Hz electrical power
   120/1/60 electrical power
   80 psig, dry, oil-free plant air
10) The equipment has been factory tested and proven leak proof prior to shipment. However, during transportation, connections may loosen and leak when first started up. It is the installer's responsibility to check such connections prior to start up and tighten as necessary.
11) All buildings, sun sheds, and weather protection shelters for housing various equipment.
12) Any item not specifically included in our proposal.

Aquatech
International Corporation
One-Four Coins Drive
Canonsburg, PA 15317 USA
t) 724 746 5300
f) 724 746 5359
www.aquatech.com

Aquatech's preference is to provide our equipment ex-works. If freight is required in our scope we request it be paid at actual. Typical equipment deliveries for this type of system are 52 to 60 weeks from PO depending on the final scope.

The pricing information supplied is based on recent proposals and represents an accuracy of +/- 15%. The above pricing is based on Aquatech standard equipment including design, documentation, component selection, quality control and terms and conditions. Technical Support services at site are not included in our above offer and can be provided at per diem rates. Please see a copy of those rates attached.

I look forward to your questions, concerns and/or comments.

Best Regards,

Ashwin Thakkar
Regional Sales Manager
T) 905-831-4441
C) 416-820-2567
thakkara@aquatech.com

Aquatech
International Corporation
One-Four Coins Drive
Canonsburg, PA 15317 USA
t) 724 746 5300
f) 724 746 5359
www.aquatech.com

Domestic Rates and Terms – Field Services

Straight Time Rate

Field erection/Construction supervisor	**$ 1,000.00 for an 8 hour work day**
Startup supervisor	$ 1,100.00 for an 8 hour work day
Training engineer	$ 1,400.00 for an 8 hour work day

Expenses

Air ticket from current location to the site	Actual cost of ticket (economy class)
Hotel room rent and tax at site	Actual cost
Rental car/ Taxi at site for engineer to commute to work	Actual cost
Food, incidental/sundry expenses	$ 100.00 per day.

Terms:

1. Tickets/invoices will be attached to the invoice for air ticket, room rent and rental car.
2. Bills/receipts not required to be produced for food and incidental/sundry expenses.
3. The purchaser will not be responsible to reimburse expenses related to entertainment.
4. The above rates will be paid for travel time (8 hours each way) and standby time. Whereas the time worked in excess of 8 hours and for time worked on holidays, the basis of calculations will be as per Clause "B" (Definitions) of Appendix A to Section III.

{In Archive} RE: Aquatech ZLD Proposal for Gerald Gentleman

MICHAEL D ROSEN to: Ashwin Thakkar 08/24/2011 08:46 AM

Cc: CHRISTOPHER.D.HORNISH, PAUL.HOORNAERT, "Patrick Randall", "Roger Blomquist", "Scott Blomquist", STEVEN.R.PASIMENI, WAYSHALEE.A.PATEL

Archive: This message is being viewed in an archive.

Hi Ashwin,

Thank you for the attached clarification regarding the interconnecting piping costs.

From: "Ashwin Thakkar" <thakkara@aquatech.com>

To: <MICHAEL.D.ROSEN@sargentlundy.com>

Cc: <CHRISTOPHER.D.HORNISH@sargentlundy.com>, <STEVEN.R.PASIMENI@sargentlundy.com>, <PAUL.HOORNAERT@sargentlundy.com>, <WAYSHALEE.A.PATEL@Sargentlundy.com>, "Patrick Randall" <randallp@aquatech.com>, "Scott Blomquist" <sblomquist@rmbsales.com>, "Roger Blomquist" <rblomquist@rmbsales.com>

Date: 08/23/2011 10:07 PM

Subject: RE: Aquatech ZLD Proposal for Gerald Gentleman

Mike:

I got your voicemail as well regarding this request.
I would recommend to add roughly ~ $ 480k to include the IC piping.

Regards,
Ashwin

From: MICHAEL.D.ROSEN@sargentlundy.com [mailto:MICHAEL.D.ROSEN@sargentlundy.com]
Sent: Tuesday, August 23, 2011 1:38 PM
To: Ashwin Thakkar
Cc: CHRISTOPHER.D.HORNISH@sargentlundy.com; STEVEN.R.PASIMENI@sargentlundy.com; PAUL.HOORNAERT@sargentlundy.com; WAYSHALEE.A.PATEL@Sargentlundy.com
Subject: Aquatech ZLD Proposal for Gerald Gentleman
Importance: High

Hi Ashwin,

Our project team briefly reviewed your budgetary proposal for the ZLD system and noticed in the list of exclusions that interconnecting piping and supports between skids was not in your scope of supply. We are currently preparing our estimate for the overall project and would prefer that you included all interconnecting piping within the battery limits of your process in your scope of supply. Can you advise what the cost adder would be to include all of the interconnecting piping in your scope of supply? Thank you.

Fw: Sargent & Lundy/Nebraska Public Power District - Gerald Gentleman FGD/Budget Pricing (2) UAT's and (2) RAT's
RUSSELL KALINS to: CHRISTOPHER D HORNISH 08/30/2011 11:15 AM

----- Forwarded by RUSSELL KALINS/Sargentlundy on 08/30/2011 11:14 AM -----

From: "Tom Lubniewski" <tlubniewski@tdproducts.com>
To: <RUSSELL.KALINS@sargentlundy.com>
Cc: <RICHARD.STANEK@sargentlundy.com>, <tpolk@pdsinc.biz>
Date: 07/28/2011 10:30 AM
Subject: Sargent & Lundy/Nebraska Public Power District - Gerald Gentleman FGD/Budget Pricing (2) UAT's and (2) RAT's

Russ,

Budget price for the UAT's rated 45/60MVA, 23kV – 7.2x7.2kV is $1.1 MUSD/unit. Lead-time is approx. 32 weeks.

Still waiting on the RAT's.

Let me know if you have questions.

Best Regards,
Tom Lubniewski
T&D Products, Inc.-ABB Rep.
4200 Cantera Drive, Suite 216
Warrenville, IL 60555
www.tdproducts.com
| ☎: 630-791-9260 |🖷: 630-791-9263 | ✉: tlubniewski@tdproducts.com

-----Original Message-----
From: RUSSELL.KALINS@sargentlundy.com [mailto:RUSSELL.KALINS@sargentlundy.com]
Sent: Monday, July 25, 2011 2:43 PM
To: tlubniewski@tdproducts.com
Cc: RICHARD.STANEK@sargentlundy.com
Subject: request for ABB transformer budgetary quote

Tom,

Per my voicemail, we are restarting the NPPD Gerald Gentleman FGD project. Required for this project will be two UATs and two RATs. We are currently revisiting the conceptual cost estimate, updating it with current equipment pricing. Please provide budgetary estimates for the four transformers by Friday, July 29th.

The ratings are as follows:

UATs:
3 winding
45/60 MVA OA/FA (22.5/30 in each secondary)
23 - 7.2 - 7.2 kV
approx impedance is 6.6% (H-X,H-Y)

RATs:
3 winding
45/60 MVA OA/FA (22.5/30 in each secondary)
230 - 7.2 - 7.2 kV
approx impedance is 7.5% (H-X,H-Y)

If you have any questions, please give me a call.

Regards,
Russell W. Kalins, P.E.
(Licensed in Illinois)
Electrical Project Engineer
Fossil Power Technologies
Sargent & Lundy LLC
312-269-2406

Fw: ABB Budget Pricing (2) UAT's and (2) RAT's/Sargent & Lundy/Nebraska Public Power District - Gerald Gentleman FGD/

RUSSELL KALINS to: CHRISTOPHER D HORNISH 08/30/2011 11:14 AM

----- Forwarded by RUSSELL KALINS/Sargentlundy on 08/30/2011 11:14 AM -----

From: "Tom Lubniewski" <tlubniewski@tdproducts.com>
To: "Russell Kalins" <RUSSELL.KALINS@sargentlundy.com>
Cc: <tpolk@pdsinc.biz>
Date: 08/01/2011 04:41 PM
Subject: ABB Budget Pricing (2) UAT's and (2) RAT's/Sargent & Lundy/Nebraska Public Power District - Gerald Gentleman FGD/

Russell,

The ABB factory budgetary estimate for the RAT's = $1.5M each.
Lead time based on current backlog = 42-44 weeks.

Still working on budgets for the UAT.

Best Regards,

Tom Lubniewski
T&D Products, Inc.-ABB Rep.
4200 Cantera Drive, Suite 216
Warrenville, IL 60555
www.tdproducts.com
| ☎: 630-791-9260 |🖷: 630-791-9263 | ✉: tlubniewski@tdproducts.com

-----Original Message-----
From: RUSSELL.KALINS@sargentlundy.com [mailto:RUSSELL.KALINS@sargentlundy.com]
Sent: Monday, July 25, 2011 2:43 PM
To: tlubniewski@tdproducts.com
Cc: RICHARD.STANEK@sargentlundy.com
Subject: request for ABB transformer budgetary quote

Tom,

Per my voicemail, we are restarting the NPPD Gerald Gentleman FGD project. Required for this project will be two UATs and two RATs. We are currently revisiting the conceptual cost estimate, updating it with current equipment pricing. Please provide budgetary estimates for the four transformers by

Friday, July 29th.

The ratings are as follows:

UATs:
3 winding
45/60 MVA OA/FA (22.5/30 in each secondary)
23 - 7.2 - 7.2 kV
approx impedance is 6.6% (H-X,H-Y)

RATs:
3 winding
45/60 MVA OA/FA (22.5/30 in each secondary)
230 - 7.2 - 7.2 kV
approx impedance is 7.5% (H-X,H-Y)

If you have any questions, please give me a call.

Regards,
Russell W. Kalins, P.E.
(Licensed in Illinois)
Electrical Project Engineer
Fossil Power Technologies
Sargent & Lundy LLC
312-269-2406

NPPD Budgetary Quotes

NPPD
GERALD GENTLEMAN STATION

SUMMARY OF QUANTITIES - PLAN 3 (44'-6" Aggregate Cars)

DESCRIPTION	QUANTITY	UNIT	PRICE / UNIT	TOTAL PRICE
MOBILIZATION	1	LS	$ 125,000.00	$ 125,000.00
CLEARING AND GRUBBING	1	LS	$ 60,000.00	$ 60,000.00
EXCAVATION	86,000	CY	$ 3.00	$ 258,000.00
EMBANKMENT (BALANCE FACTOR = 1.25)	488,000	CY	$ 6.00	$ 2,928,000.00
18" CMP (14 GAGE)	0	LF	$ 50.00	$ -
24" CMP (14 GAGE)	20	LF	$ 75.00	$ 1,500.00
36" CMP (14 GAGE)	1,165	LF	$ 100.00	$ 116,500.00
48" CMP (12 GAGE)	0	LF	$ 125.00	$ -
66" CMP (14 GAGE)	0	LF	$ 150.00	$ -
72" CMP (12 GAGE)	235	LF	$ 180.00	$ 42,300.00
18" FES	0	EA	$ 220.00	$ -
24" FES	0	EA	$ 240.00	$ -
36" FES	11	EA	$ 510.00	$ 5,610.00
48" FES	0	EA	$ 1,600.00	$ -
66" FES	0	EA	$ 2,000.00	$ -
72" FES	2	EA	$ 2,600.00	$ 5,200.00
GRATE INLET (NDOR TYPE C) (9'-6")	0	EA	$ 2,500.00	$ -
GRATE INLET (NDOR TYPE D) (5'-0")	10	EA	$ 2,000.00	$ 20,000.00
GRATE INLET (NDOR TYPE D) (5'-6")	8	EA	$ 2,200.00	$ 17,600.00
GRATE INLET (NDOR TYPE D) (7'-0")	1	EA	$ 2,500.00	$ 2,500.00
CONCRETE PLUG (24")	1	EA	$ 250.00	$ 250.00
GROUT	6	CY	$ 150.00	$ 900.00
REMOVE EXISTING CMP	0	LF	$ 20.00	$ -
REMOVE EXISTING GRATE INLET	1	EA	$ 200.00	$ 200.00
RIP RAP	50	TONS	$ 120.00	$ 6,000.00
SUBBALLAST	14,000	CY	$ 60.00	$ 840,000.00
TRACK CONSTRUCTION - NEW TRACK	19,100	TF	$ 200.00	$ 3,820,000.00
REALIGN EXISTING TRACK	2,500	TF	$ 50.00	$ 125,000.00
REMOVE TRACK	0	TF	$ 50.00	$ -
REMOVE EXISTING TURNOUT	0	EA	$ 5,000.00	$ -
RELOCATE EXISTING TURNOUT	1	EA	$ 30,000.00	$ 30,000.00
INSTALL NO. 9 TURNOUT	6	EA	$ 75,000.00	$ 450,000.00
INSTALL NO. 11 TURNOUT	0	EA	$ 90,000.00	$ -
INSTALL NO. 15 TURNOUT	1	EA	$ 100,000.00	$ 100,000.00
WATER MAIN CASING	155	LF	$ 300.00	$ 46,500.00
TIMBER CROSSING	12	EA	$ 6,000.00	$ 72,000.00
GRAVEL FOR ROAD	0	CY	$ 40.00	$ -
CHAIN LINK FENCE	4,250	LF	$ 18.00	$ 76,500.00
REMOVE EXISTING FENCE	2,950	LF	$ 6.00	$ 17,700.00
EROSION CONTROL MATTING***	58,000	SY	$ 2.50	$ 145,000.00
INSTALL SILT FENCE	10,000	LF	$ 4.50	$ 45,000.00
MAINTAIN SILT FENCE	10,000	LF	$ 2.00	$ 20,000.00
INSTALL BALE CHECK	50	EA	$ 70.00	$ 3,500.00
MAINTAIN BALE CHECK	50	EA	$ 30.00	$ 1,500.00
COVER CROP SEEDING	20	ACRE	$ 1,500.00	$ 30,000.00
SEEDING	20	ACRE	$ 2,000.00	$ 40,000.00
BRIDGE	70	LF	$ 10,000.00	$ 700,000.00
RETAININAG WALL	1,500	SF	$ 30.00	$ 45,000.00
EXTEND TUNNEL	95	LF	$ 5,000.00	$ 475,000.00
CONVEYOR SYSTEM		LS		$ -
Total				$ 10,672,260.00

Nebraska Public Power District

Gerald Gentleman Station, Sutherland, NE

Summary of Engineers' Estimate of Construction Cost for Reagent Track Bridge

Prepared By: JHG 12/21/2009

Checked By: MFH/MJO 12/31/2009

Spec. No.	Description	Unit	Unit Cost	Quantity	Cost
02052	CONCRETE REMOVAL	C.Y.	$ 1,500.00	40	$ 60,471
02162	TEMPORARY EARTH RETENTION	S.F.	$ 34.37	1,442	$ 49,556
02201	EXCAVATION FOR STRUCTURES	C.Y.	$ 50.00	656	$ 32,815
02203	POROUS GRANULAR BACKFILL	C.Y.	$ 60.00	283	$ 16,980
04200	PERMANENT SHEET PILES	S.F.	$ 45.00	5,065	$ 227,925
04200	STEEL PILES	L.F.	$ 70.00	1,474	$ 103,180
04200	TEST PILES	EACH	$ 10,500.00	2	$ 21,000
04400	REINFORCEMENT BARS	LB.	$ 1.10	19,500	$ 21,450
04400	C.I.P. CONCRETE	C.Y.	$ 700.00	132	$ 92,400
04500	PRECAST PRESTRESSED CONCRETE BEAMS	L.F.	$ 400.00	475	$ 190,000
04700	STEEL POST HANDRAIL	L.F.	$ 50.00	57	$ 2,850
07101	DECK WATERPROOFING	S.F.	$ 30.00	1,642	$ 49,253
	4" UTILITY RELOCATE	L.S.	$ 20,000.00	1	$ 20,000
	4" DIA. PERFORATED PIPE DRAIN	L.F.	$ 50.00	118	$ 5,900
	ANCHOR BOLTS	EACH	$ 120.00	20	$ 2,400
04900	ELASTOMERIC BEARING ASSEMBLY, TYPE 1	EACH	$ 1,500.00	5	$ 7,500
	CONTINGENCY 10%				$ 90,368

Project Subtotal **$ 995,000**

The estimate does not include the following: track construction (ballast, ties, rails and OTM), signal work, railroad force account, embankment, subballast, erosion control, grading, and construction management.