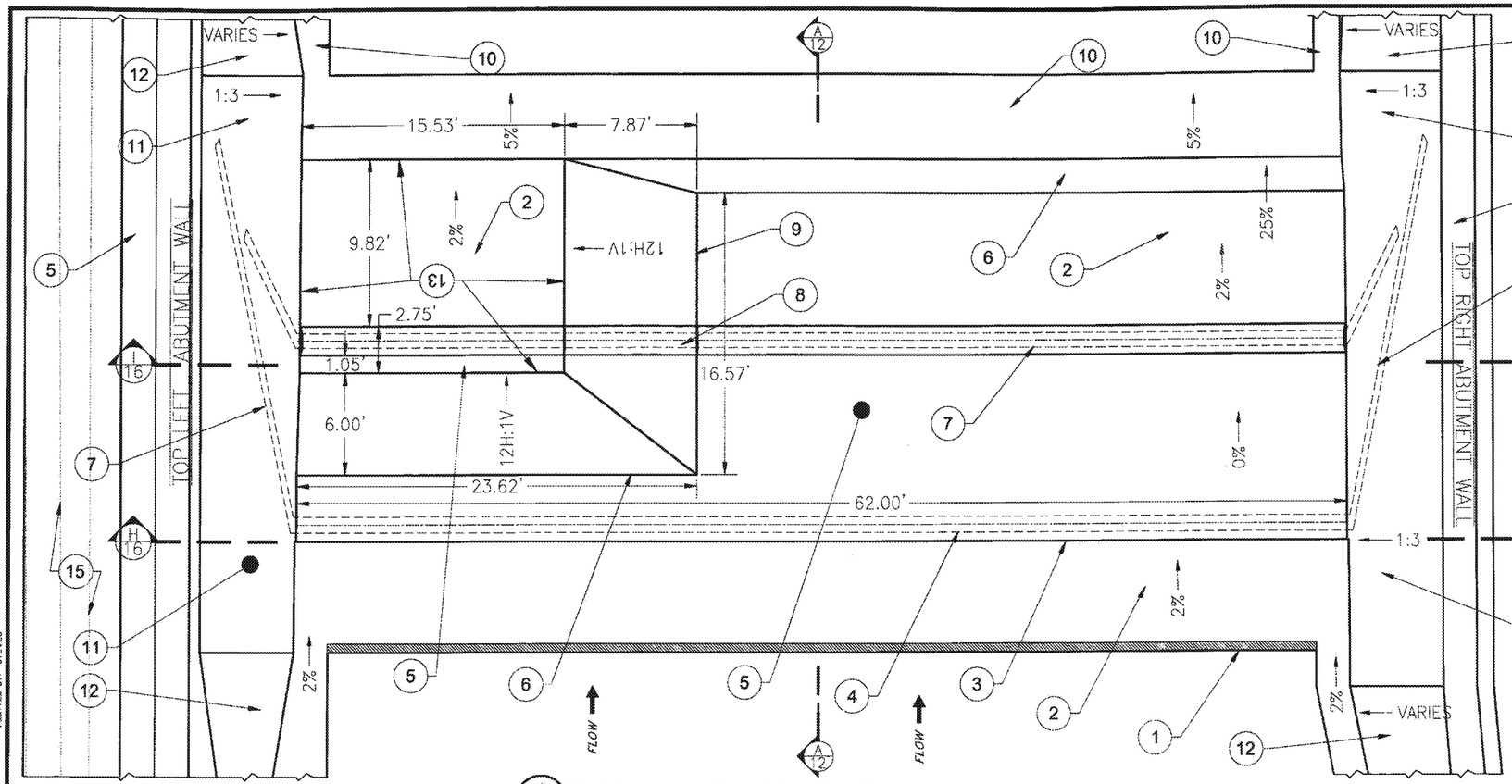

1 / 15 **Bladder Concrete Foundation - Plan View**
PLAN VIEW SCALE: 1"= 4 (FULL SIZE 22X34 SHEET)

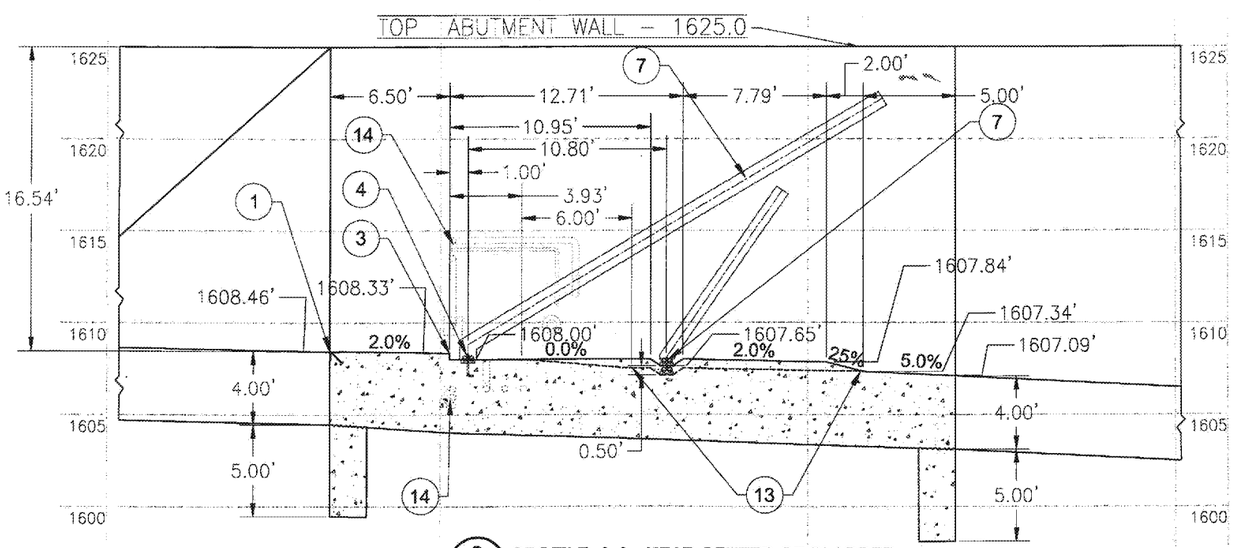

2 / 15 **PROFILE A-A - NEAR CENTER OF BLADDER**
SECTION VIEW SCALE: 1"= 4' (FULL SIZE 22X34 SHEET)

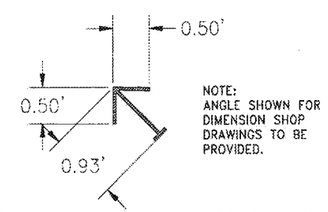

3 / 15 **DETAIL - UPSTREAM ANCHOR ANGLE**
SECTION VIEW SCALE: 1"= 1' (FULL SIZE 22X34 SHEET)

HORIZONTAL SCALE
4 0 4 8
FEET

VERTICAL SCALE
4 0 4 8
FEET

NOTES:

1. UPSTREAM ANCHORED ANGLE ALONG EDGE OF CONCRETE, SEE DETAIL
2. SLOPE CONCRETE AT 2%
3. 4" CONCRETE STEP TO ELEVATION 1608.0, UPPER CLAMP
4. UP-STREAM BLADDER CLAMP
5. SLOPE CONCRETE AT 0%
6. EDGE OF CONCRETE SLOPE TO FORMED 0.5' DEPRESSION UNDER BLADDER, SLOPE CONCRETE AT 4.17% (12H:1V)
7. BLADDER CLAMP RECESSED INTO CONCRETE
8. DOWNSTREAM BLADDER CLAMP TO SLOPE INTO 0.5' DEPRESSION
9. SLOPE CONCRETE AT 25% (2H:0.5V) TO FORM BLADDER OVERLAP LAYDOWN AREA
10. SLOPE CONCRETE AT 5% TO DOWNSTREAM EDGE OF CONCRETE
11. ABUTMENT CONCRETE WALLS SLOPE AT 1H:3V ADJACENT TO BLADDER CONCRETE FOUNDATION
12. ABUTMENT CONCRETE WALLS SLOPE VARIES WITH LOCATION
13. FORMED 0.5' DEPRESSION IN BLADDER CONCRETE FOUNDATION
14. CONDUIT FOR BLADDER DRAINS, SENSORS, PRESSURIZED AIR, COMMUNICATIONS, POWER AND FUTURE EXPANSION ACTUAL LOCATIONS TO BE DETERMINED
15. APPROXIMATE LOCATION OF EXISTING BURIED CONCRETE ABUTMENT WITH BATTERED SLOPES.

OWNER TO SUPPLY BLADDER, BLADDER CLAMPS AND OTHER RELATED APPURTENANCES NECESSARY FOR INSTALLATION AND OPERATION OF BLADDER.

THE FRAME, ANCHORS, CONDUITS AND OTHER FEATURES WILL BE MODIFIED UPON THE SELECTION AND ENGINEERING DONE BY THE BLADDER MANUFACTURER. DETAILS WILL REQUIRED COORDINATE FOR CORRECT INSTALLATION.

MUCH OF THE EXISTING STRUCTURES PRESENT AT THE DIVERSION ARE NOT FULLY UNDERSTOOD OR KNOWN AND WILL REQUIRE MODIFICATIONS FOR CONSTRUCTION OF FACILITIES.

NO.	DATE	REVISION	BY	CK
1	12/8/19	Intake_Bid_Set	SpG	

Electron HYDRO

DIVERSION REPAIR, SPILLWAY REPLACEMENT AND BANK PROTECTION

BLADDER FOUNDATION PLAN & PROFILE

PIERCE COUNTY WASHINGTON

DESIGN: TS
DRAWN: SpG
CHECKED: .
DATE: 12/8/2019
JOB#: 11011900

SHEET 15 OF 41

DRAWING 15

DATE & TIME: December 10, 2019 10:24
PLOTTED BY: STEVEB

FILE NAME & LOCATION
E:\Projects\ELECTRON\DWG\Design\Intake_Phase-II\V.E._BLADDER-CONC_2020.dwg

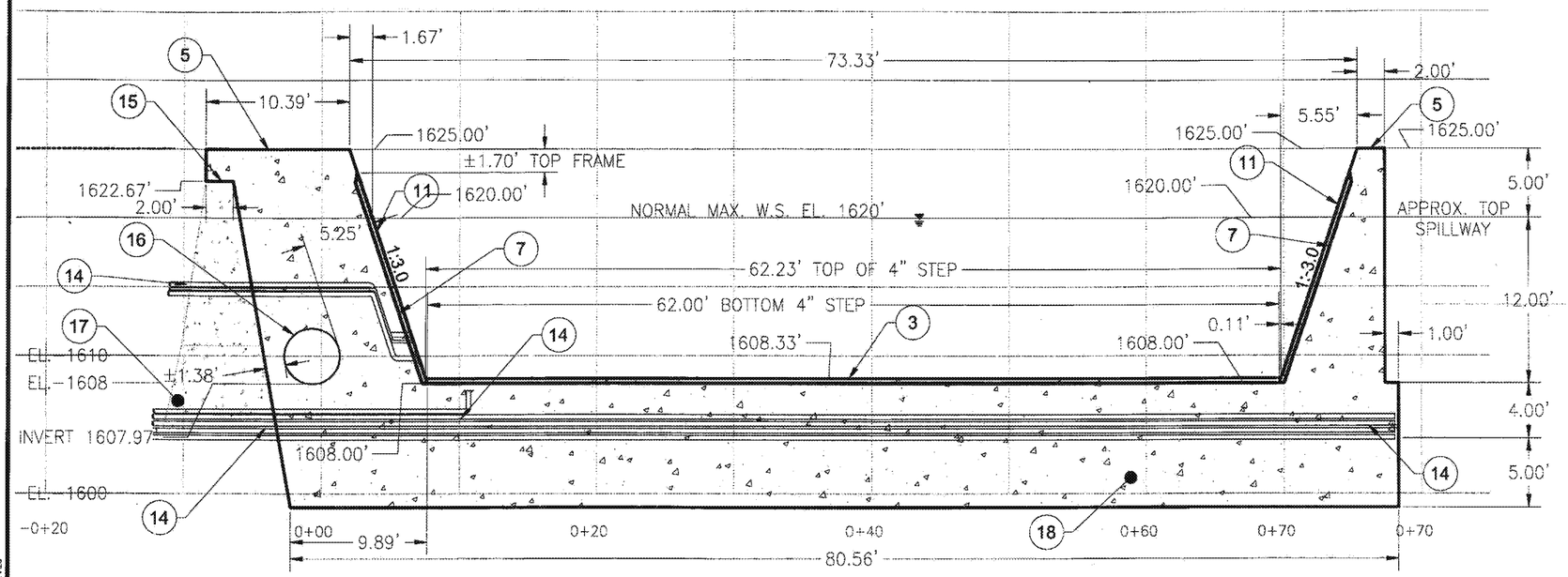

H/16 SECTION B-B - ± 10+00.5 AT 4" CONCRETE STEP
SECTION
SCALE: 1"= 5' (FULL SIZE 22X34 SHEET)

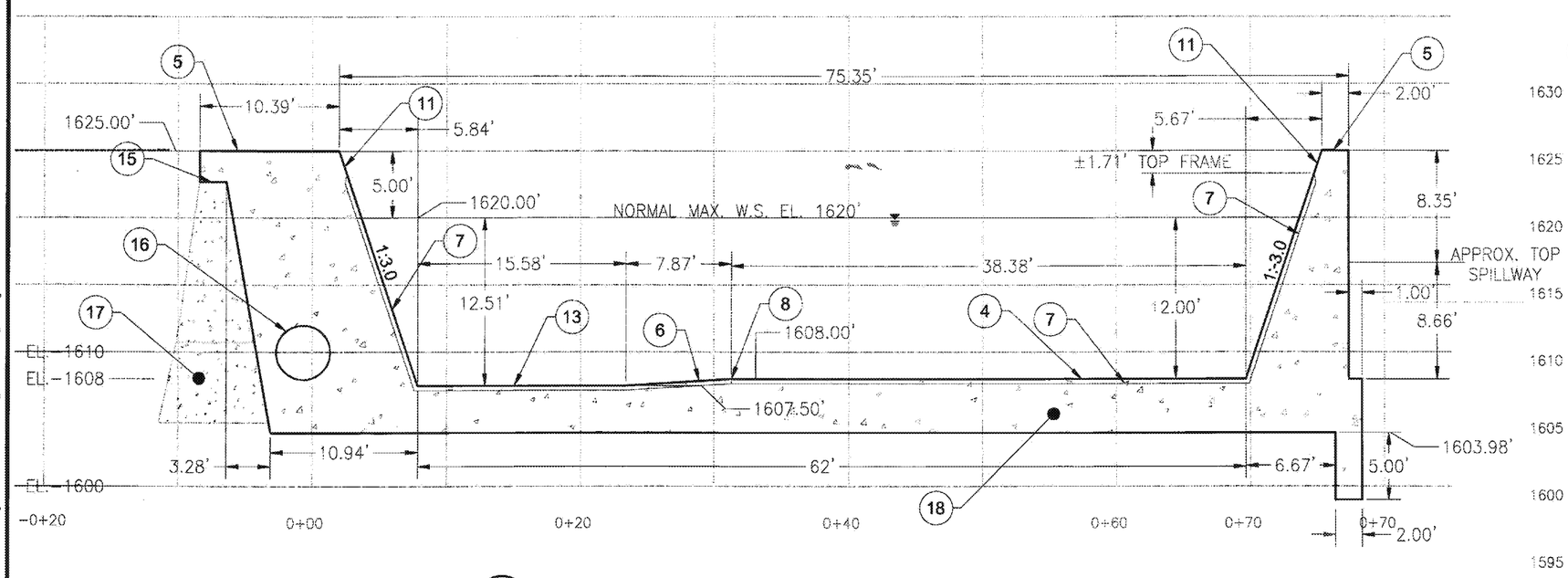

I/16 SECTION C-C - ± 10+11 ±10.5' DOWNSTREAM OF 4" CONCRETE STEP
SECTION
SCALE: 1"= 5' (FULL SIZE 22X34 SHEET)

NOTES:

3. 4" CONCRETE STEP TO ELEVATION 1608.0, UPPER CLAMP
4. UP-STREAM BLADDER CLAMP
5. SLOPE CONCRETE AT 0%
6. EDGE OF CONCRETE SLOPE TO FORMED 0.5' DEPRESSION UNDER BLADDER, SLOPE CONCRETE AT 4.17% (12H:1V)
7. BLADDER CLAMP RECESSED INTO CONCRETE
8. DOWNSTREAM BLADDER CLAMP TO SLOPE INTO 0.5' DEPRESSION
11. ABUTMENT CONCRETE WALLS SLOPE AT 1H:3V ADJACENT TO BLADDER CONCRETE FOUNDATION
13. FORMED 0.5' DEPRESSION IN BLADDER CONCRETE FOUNDATION
14. CONDUIT FOR BLADDER DRAINS, SENSORS, PRESSURIZED AIR, COMMUNICATIONS, POWER AND FUTURE EXPANSION.
15. APPROXIMATE LOCATION OF EXISTING BURIED CONCRETE ABUTMENT WITH BATTERED SLOPES.
16. SLUICE PIPE 48"ø EMBEDDED IN CONCRETE
17. ACTUAL DEPTH AND FACE OF THE EXISTING CONCRETE ABUTMENT IS NOT KNOWN AND WILL REQUIRE FIELD VERIFICATION.
18. FOR TYPICAL REINFORCEMENT REFER TO SHEET 25 FOR THE BLADDER FOUNDATION AND ABUTMENT PLACEMENT FOR USE IN BIDDING QUANTITIES.

NO.	DATE	REVISION	BY	CK
1	12/10/19	Intake_Bid_Set	SpG	

Electron HYDRO

DIVERSION REPAIR, SPILLWAY REPLACEMENT AND BANK PROTECTION

BLADDER FOUNDATION SECTIONS H & I

PIERCE COUNTY WASHINGTON

SCALE: 1"=5'

DESIGN: TS
DRAWN: SpG
CHECKED: .
DATE: 12/8/2019
JOB#: 11011900

SHEET 16 OF 28

DRAWING 16

DATE & TIME: December 10, 2019 10:34
PLOTTED BY: STEVEG

FILE NAME & LOCATION:
D:\Projects\ELECTRON\DWG\Design\Intake_Phase-II\FILE_BLADDER-CONC_2020.dwg

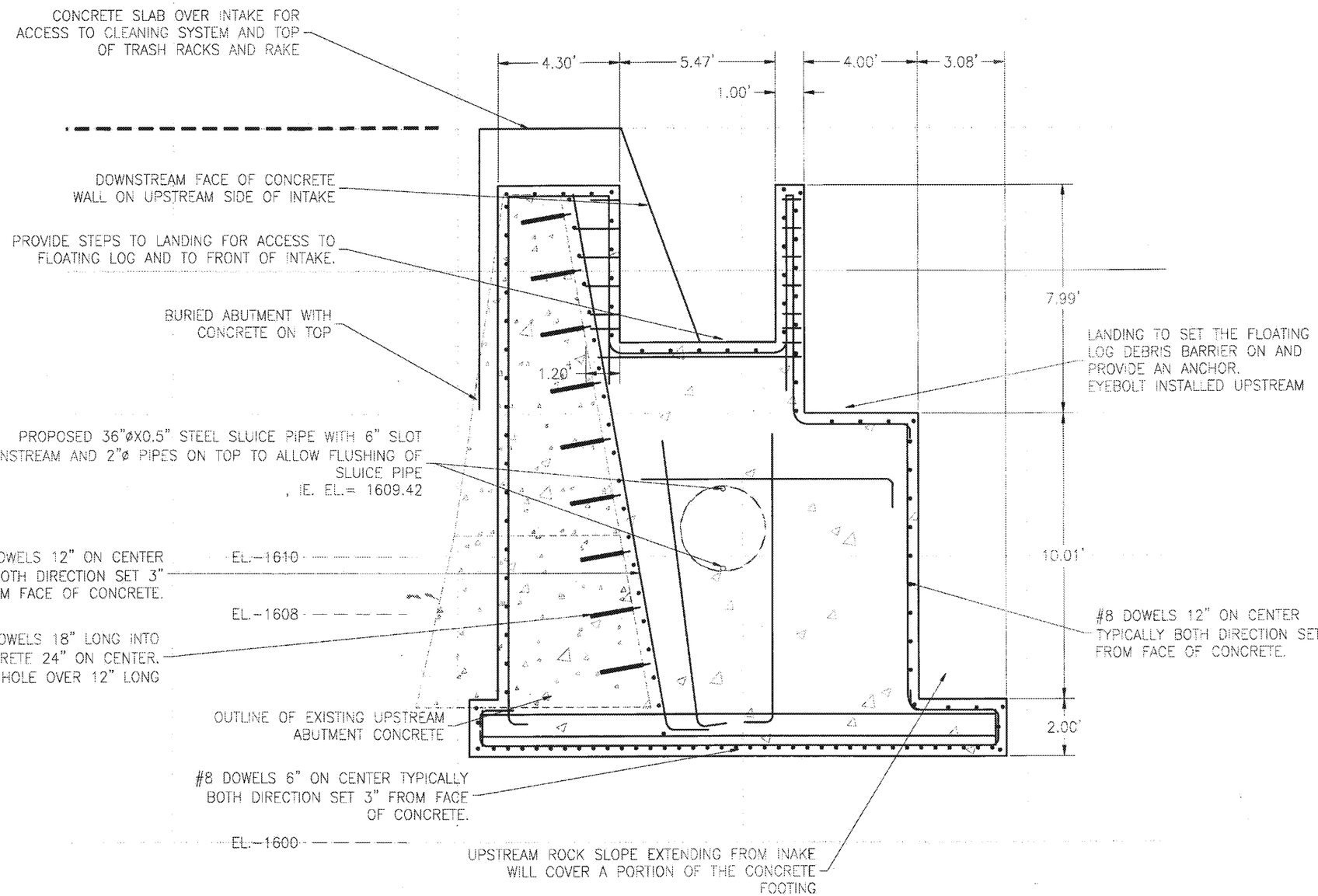

A / 11 SECTION **SECTION N -09+07.72 - UPPER END RACK & SLUICE SYSTEM**

1"= 2' (FOR 22X34 SHEET)

HORIZONTAL SCALE

2 0 2 4

FEET

NO.	DATE	REVISION	BY	CK
1	12/6/19	Intake_Bid_Set	SpG	

Electron HYDRO

DIVERSION REPAIR, SPILLWAY REPLACEMENT AND BANK PROTECTION

INTAKE SECTION N UPSTREAM OF INTAKE

PIERCE COUNTY WASHINGTON

Scale: 1"=4' (Full Size 22x34)

DESIGN: TS
DRAWN: SpG
CHECKED: .
DATE: 12/8/2019
JOB#: 11011900

SHEET 17 OF 28

DRAWING 17

DATE & TIME PLOTTED BY: December 10, 2019 12:04
FILE NAME & LOCATION: E:\Projects\ELECTRON\DWG\Design\Intake_Phase-IC\ELE_BLA0SER-CONC_2020.dwg

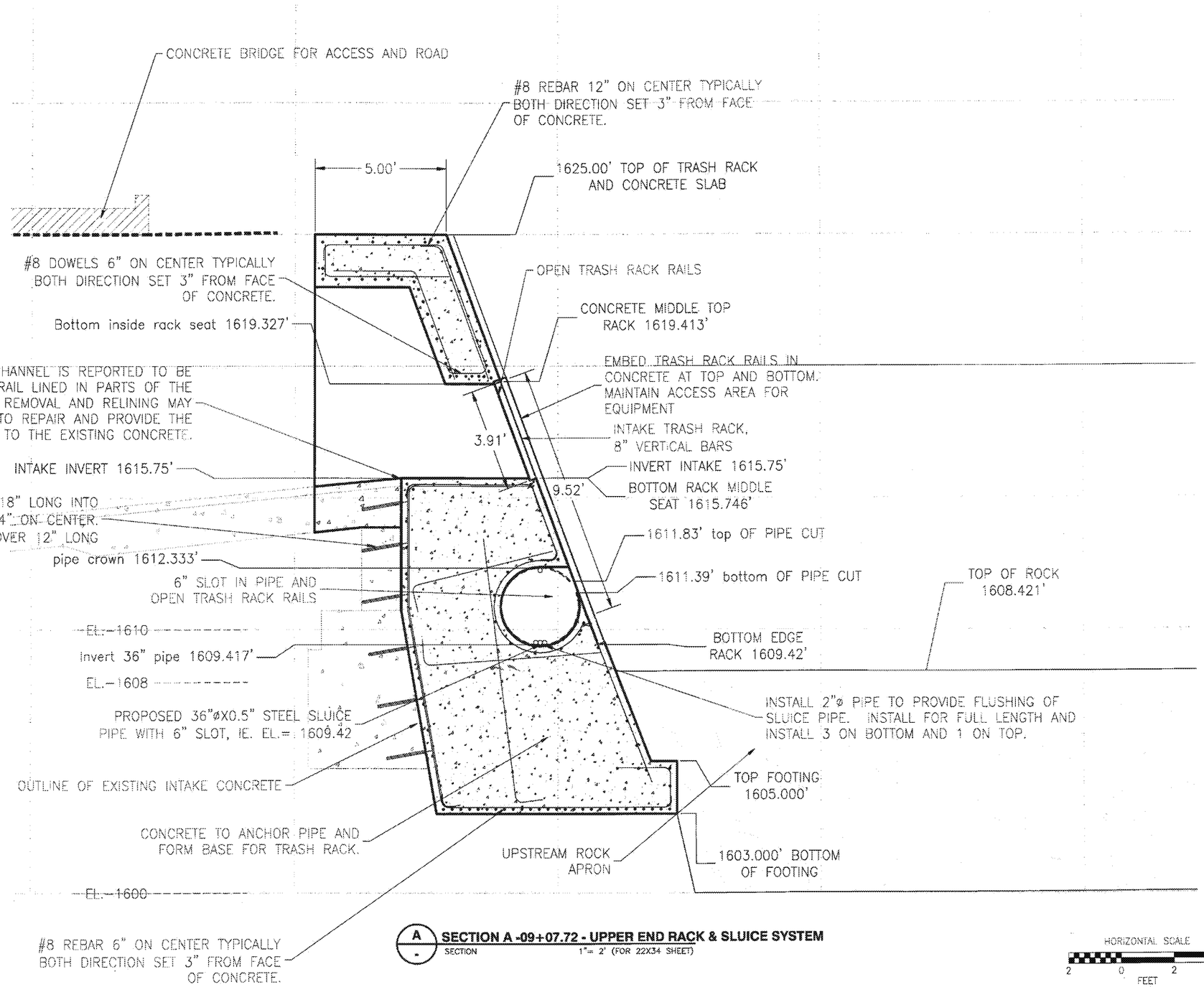

NO.	DATE	REVISION	BY	CK
1	12/8/19	Intake_Bld_Sat	SpG	

Electron HYDRO

DIVERSION REPAIR, SPILLWAY REPLACEMENT AND BANK PROTECTION

INTAKE SECTION A

PIERCE COUNTY WASHINGTON

Scale: 1"=4' (Full Size 22x34)

DESIGN: TS
DRAWN: SpG
CHECKED:
DATE: 12/8/2019
JOB#: 11011900

SHEET 18 OF 28

DRAWING 18

DATE & TIME: December 10, 2019 14:54
PLOTTED BY: STEVEGB

FILE NAME & LOCATION:
E:\Projects\ELECTRON\DWG\Design\Intake_Phase-1C\ELE_BLADDER-CONC_2020L.dwg

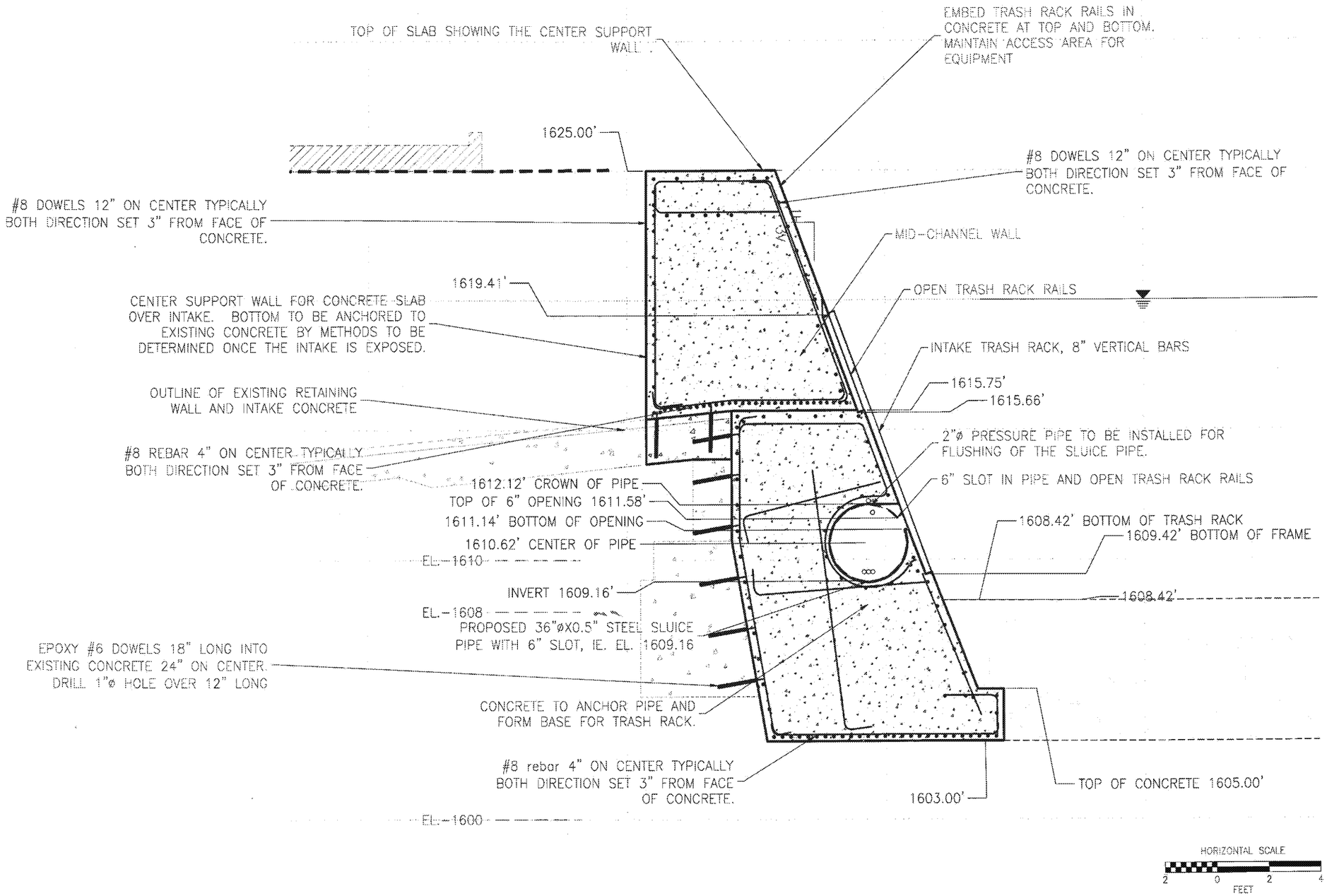

B / 11 **SECTION B - 09+33.04 - CENTER INTAKE WALL**
SECTION 1"= 2' (FOR 22X34 SHEET)

NO.	DATE	REVISION	BY	CK
1	12/8/19	Intake_Bld_Set	SpG	

Electron HYDRO

DIVERSION REPAIR, SPILLWAY REPLACEMENT AND BANK PROTECTION

INTAKE SECTIONS B

PIERCE COUNTY WASHINGTON

Scale: 1"=4' (Full Size 22x34)

DESIGN: TS
DRAWN: SpG
CHECKED:
DATE: 12/8/2019
JOB#: 11011900

SHEET 19 OF 28

DRAWING 19

DATE & TIME: December 10, 2019 14:54
PLOTTED BY: STEVEG

FILE NAME & LOCATION
E:\Projects\ELECTRON\DWG\Design\Intake_Phase-IC\ELE_BLADDER CONC_2020.dwg

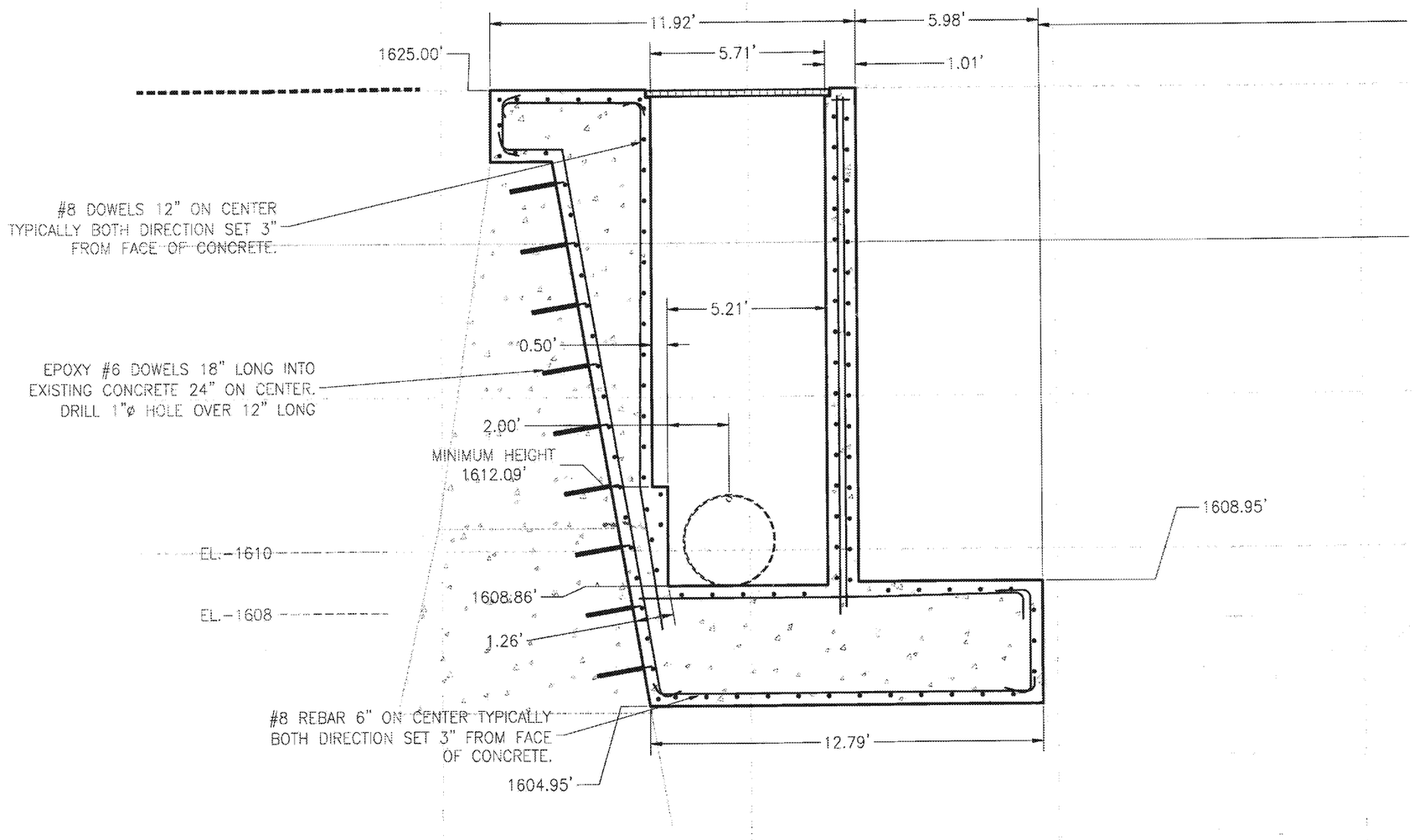

D
SECTION

SECTION D - 09+63.70 - UPSTREAM SLUICE VALVE PIT

1"= 2' (FOR 22X34 SHEET)

HORIZONTAL SCALE
5 0 5 10
FEET

NO.	DATE	REVISION	BY	CK
1	12/8/19	Intake_Bld_Set	SpG	

Electron HYDRO

DIVERSION REPAIR, SPILLWAY REPLACEMENT AND BANK PROTECTION

DIVERSION SECTIONS D

PIERCE COUNTY WASHINGTON

SCALE: 1"=2' (full size 22X34)

DESIGN: TS
DRAWN: SpG
CHECKED: .
DATE: 12/8/2019
JOB#: 11011900

SHEET 20 OF 28

DRAWING 20

DATE & TIME: December 10, 2019 1301
PLOTTED BY: STEVEE

FILE NAME & LOCATION:
S:\Projects\ELECTRON\DWG\Design\Intake_Phase-IC\ELE_BLADDER-CONC_2020.dwg

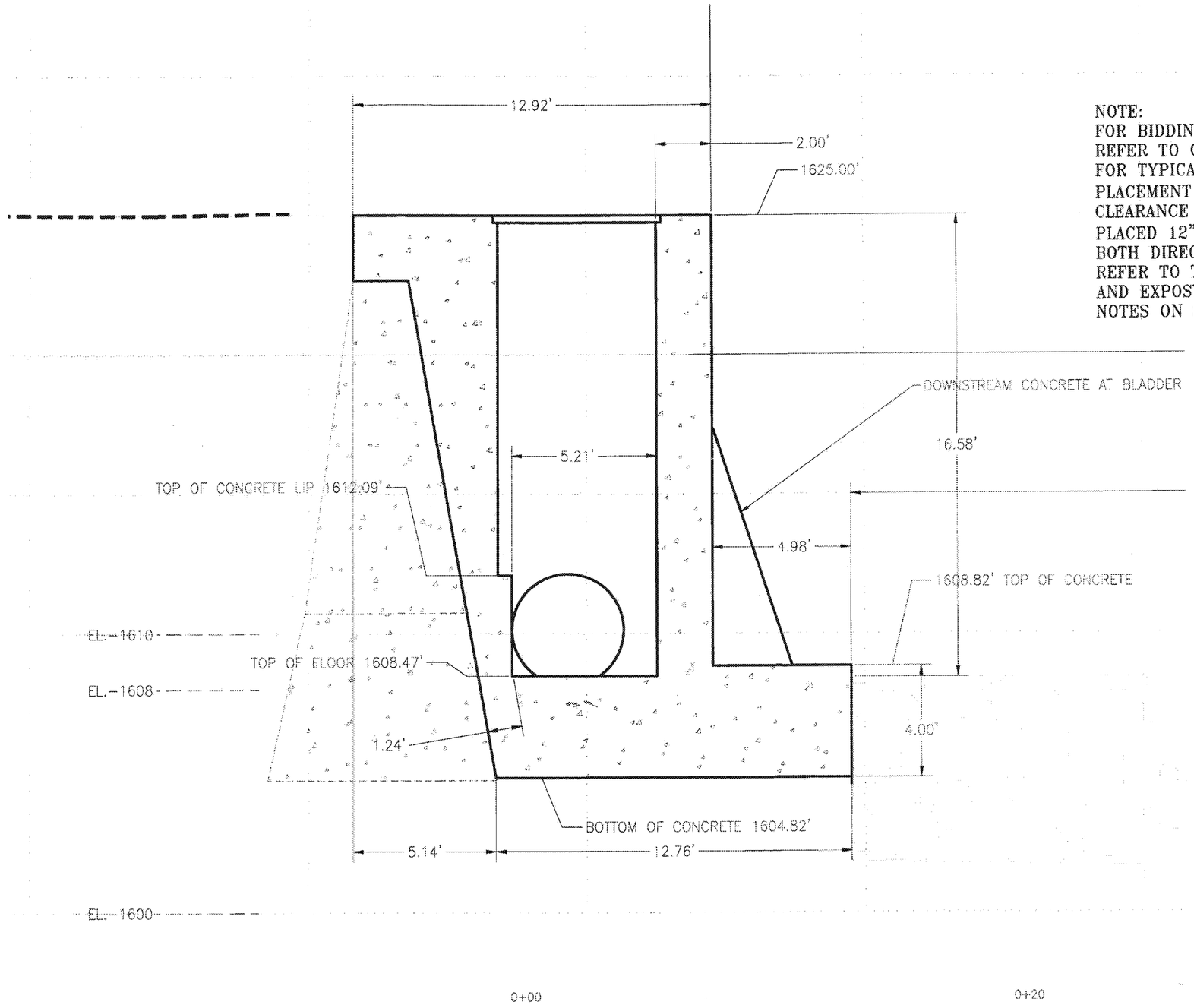

NOTE:
FOR BIDDING PURPOSES REFER TO OTHER SHEETS FOR TYPICAL REBAR PLACEMENT PROVIDING 3" CLEARANCE AND #8 REBAR PLACED 12" ON CENTER IN BOTH DIRECTIONS. ALSO REFER TO TYPICAL REBAR AND EXPOSY ANCHOR NOTES ON SHEET 25.

E
-
SECTION E - 09+69.80 - MIDDLE VALVE PIT
SECTION 1"= 5' (FOR 22X34 SHEET)

HORIZONTAL SCALE
5 0 5 10
FEET

NO.	DATE	REVISION	BY	CK
1	12/8/19	Intake_Bid_Set	SpG	

Electron HYDRO

DIVERSION REPAIR, SPILLWAY REPLACEMENT AND BANK PROTECTION

DIVERSION SECTION E

PIERCE COUNTY WASHINGTON

Scale: 1"=2' (full size (22X34)

DESIGN: TS
DRAWN: SpG
CHECKED: .
DATE: 12/8/2019
JOB#: 11011900

SHEET 21 OF 28

DRAWING 21

DATE & TIME: December 10, 2019 1:30:5
PLOTTED BY: STEVEG

FILE NAME & LOCATION:
E:\Project\ELECTRON\DWG\Design\Intake_Phase-IC\ELE_BLADDER-CONC_2020.dwg

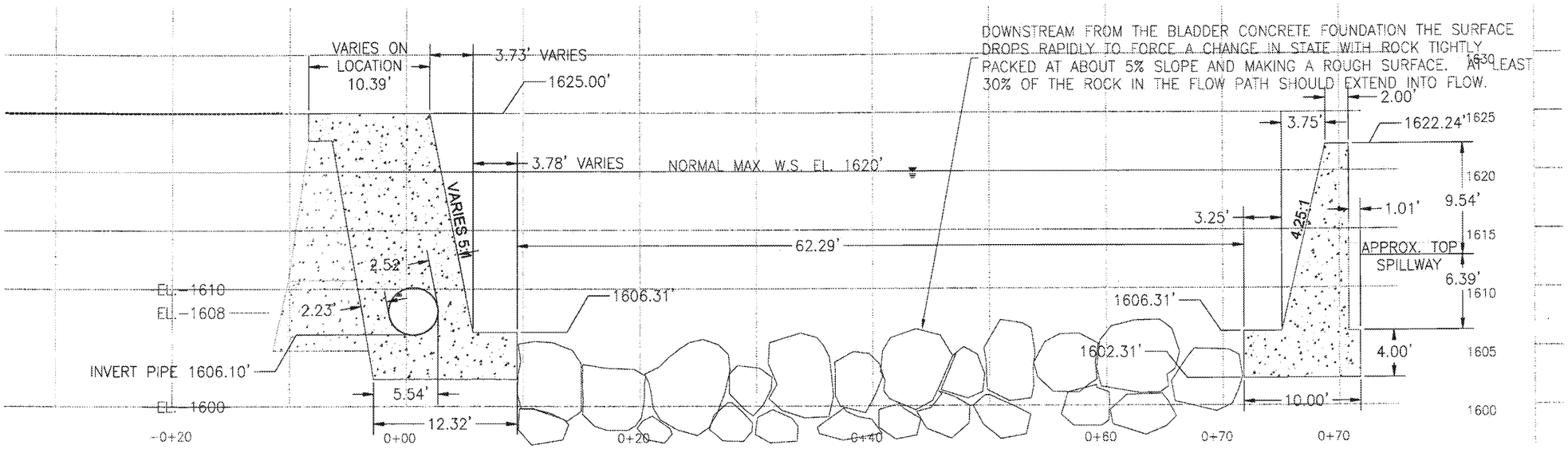

J2 SECTION J2 - 10+49.00 - (± 32') DOWNSTREAM OF WEIR FACE
SECTION 1"= 5' (FOR 22X34 SHEET)

HORIZONTAL SCALE
5 0 5 10
FEET

NOTE:
FOR BIDDING PURPOSES REFER TO TYPICAL REINFORCEMENT PLACING SHOWN ON SHEET 25.

PRELIMINARY - 2019 - 2/1 REVIEW

NO.	DATE	REVISION	BY	CK
1	12/8/19	Intake_Bld_Set	SPG	

Electron HYDRO

DIVERSION REPAIR, SPILLWAY REPLACEMENT AND BANK PROTECTION

DIVERSION SECTIONS-J2

PIERCE COUNTY WASHINGTON

Scale: 1"=5' (full size 22x34)

DESIGN: TS
DRAWN: SpG
CHECKED: .
DATE: 12/8/2019
JOB#: 11011900

SHEET 22 OF 28

DRAWING 22

DATE & TIME: December 10, 2019 16:44
PLOTTED BY: STEVEG

FILE NAME & LOCATION
E:\Projects\ELECTRON\DWG\Design\Intake_Phase-1D\ELE_BLADDER-CONC_2020.dwg

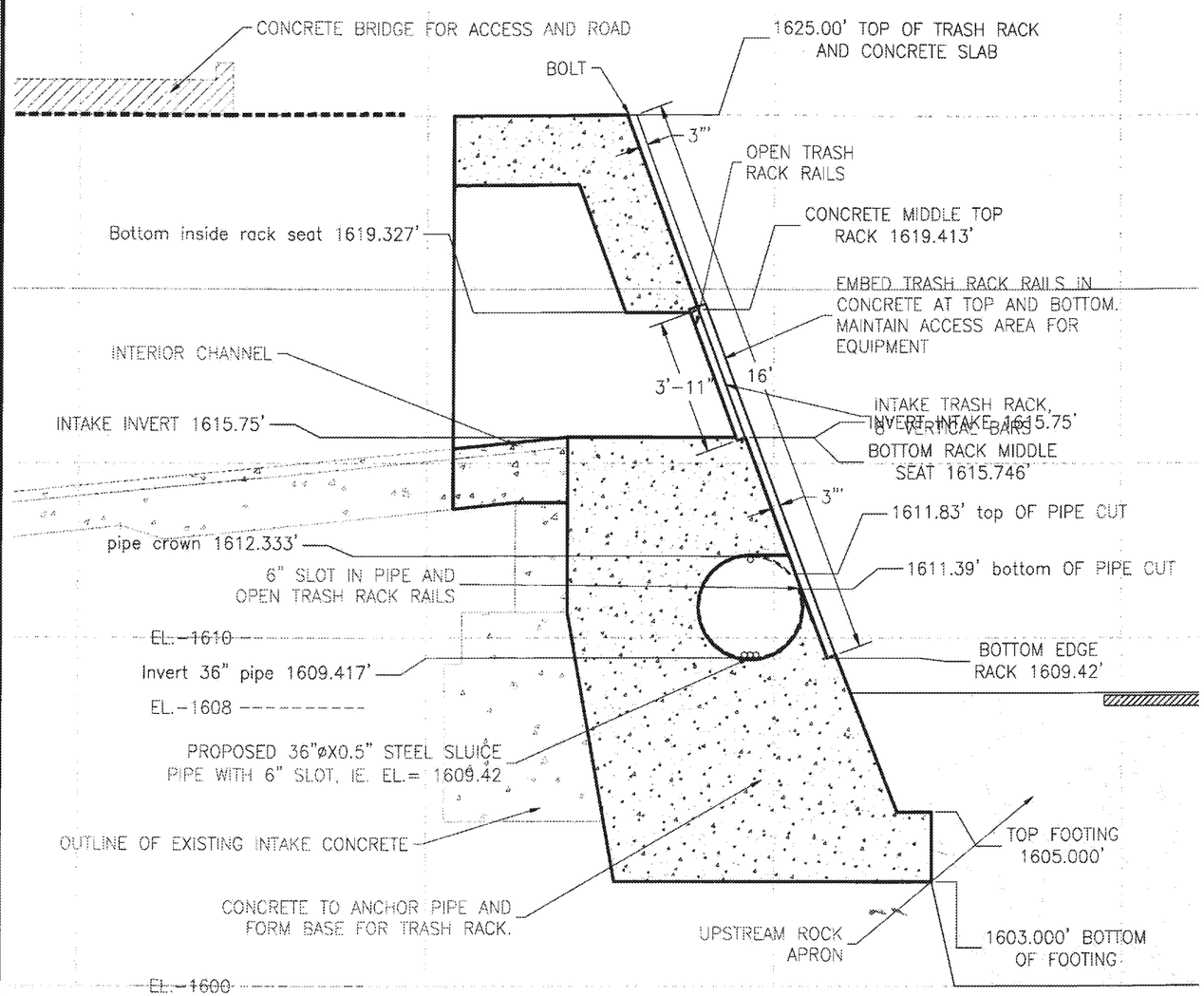

A - SECTION A -09+07.72 - UPPER END RACK & SLUICE SYSTEM
SECTION 1"= 2' (FOR 22X34 SHEET)

HORIZONTAL SCALE
2 0 2 4
FEET

NOTE:
TRASH RACK TO BE SUPPLIED BY OWNER WITH CONTRACTOR INSTALLING.

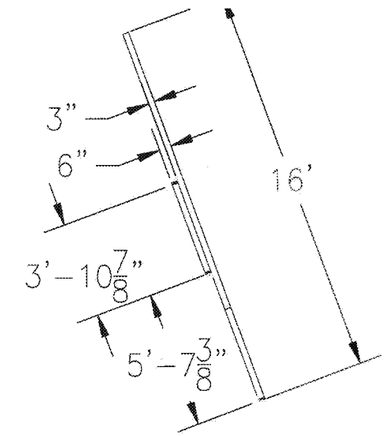

B - TRASH RACK SIDE VIEW
SECTION 1"= 3' (FOR 22X34 SHEET)

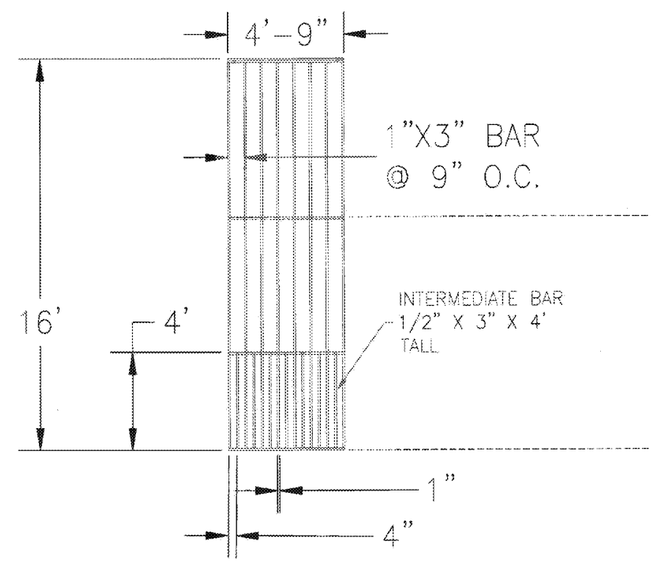

B - TRASH RACK FRONT VIEW
SECTION 1"= 3' (FOR 22X34 SHEET)

HORIZONTAL SCALE
3 0 3 6
FEET

NO.	DATE	REVISION	BY	CK
1	12/8/19	Intake_Bid_Set	SPG	

Electron HYDRO

DIVERSION REPAIR, SPILLWAY REPLACEMENT AND BANK PROTECTION

INTAKE SECTION

PIERCE COUNTY WASHINGTON

Varies

DESIGN: TS
DRAWN: SpG
CHECKED: .
DATE: 12/8/2019
JOB#: 11011900

SHEET 23 OF 28

DRAWING 23

FILE NAME & LOCATION: EX:\Projects\ELECTRON\DWG\Design\Intake_Phase-1C\ELE_BLADDER-CONC_2020.dwg

DATE & TIME: December 10, 2019 14:03
PLOTTED BY: STEVEG

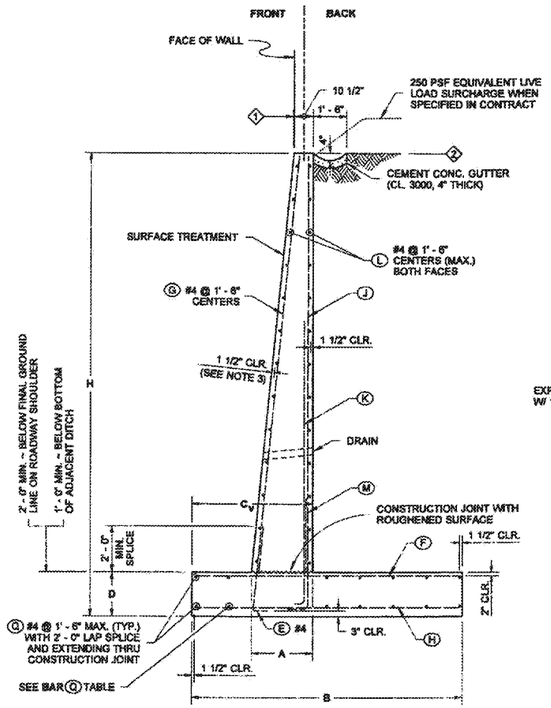

TYPICAL SECTION

BAR G #4		
LOCATION	WALL HEIGHT (H)	QTY.
TOP OF FOOTING	≤ 12'	5
	13' ≤ 16'	6
	17' ≤ 22'	7
	23' ≤ 28'	9
	29' ≤ 35'	11
BOTTOM OF FOOTING	≤ 12'	5
	13' ≤ 16'	6
	17' ≤ 22'	7
	23' ≤ 28'	9
	29' ≤ 35'	11

1. OFFSET ~ SET TOP OF WALL BACK:
   H ≤ 20' ..... OFFSET = 1/2"
   H ≥ 20' ..... OFFSET (inches) = $\frac{H(ft)}{8} - 2$
2. WHEN THE CONTRACT SPECIFIES CABLE FENCE, BACKFILL AND THE CEMENT CONCRETE GUTTER SHALL BE PLACED 6" MIN. FROM THE TOP OF THE WALL

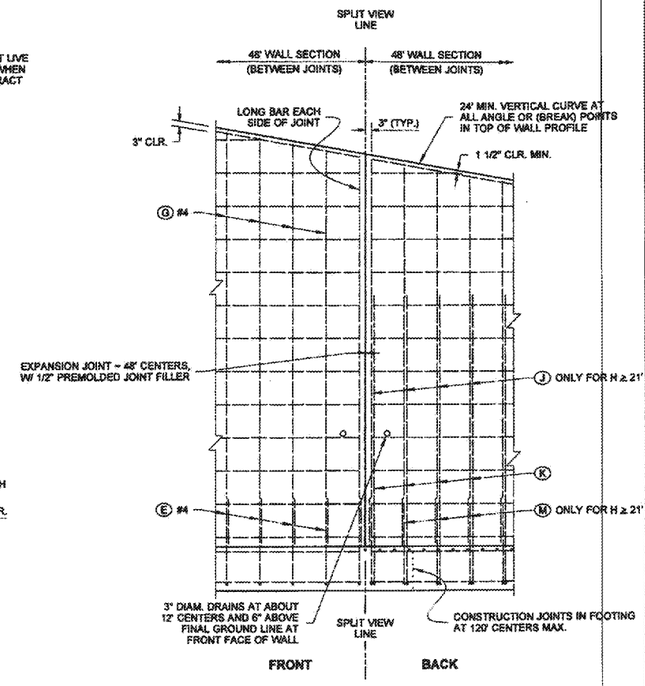

SPLIT ELEVATION VIEW
(SHOWING SEPARATE REBAR LAYERS)

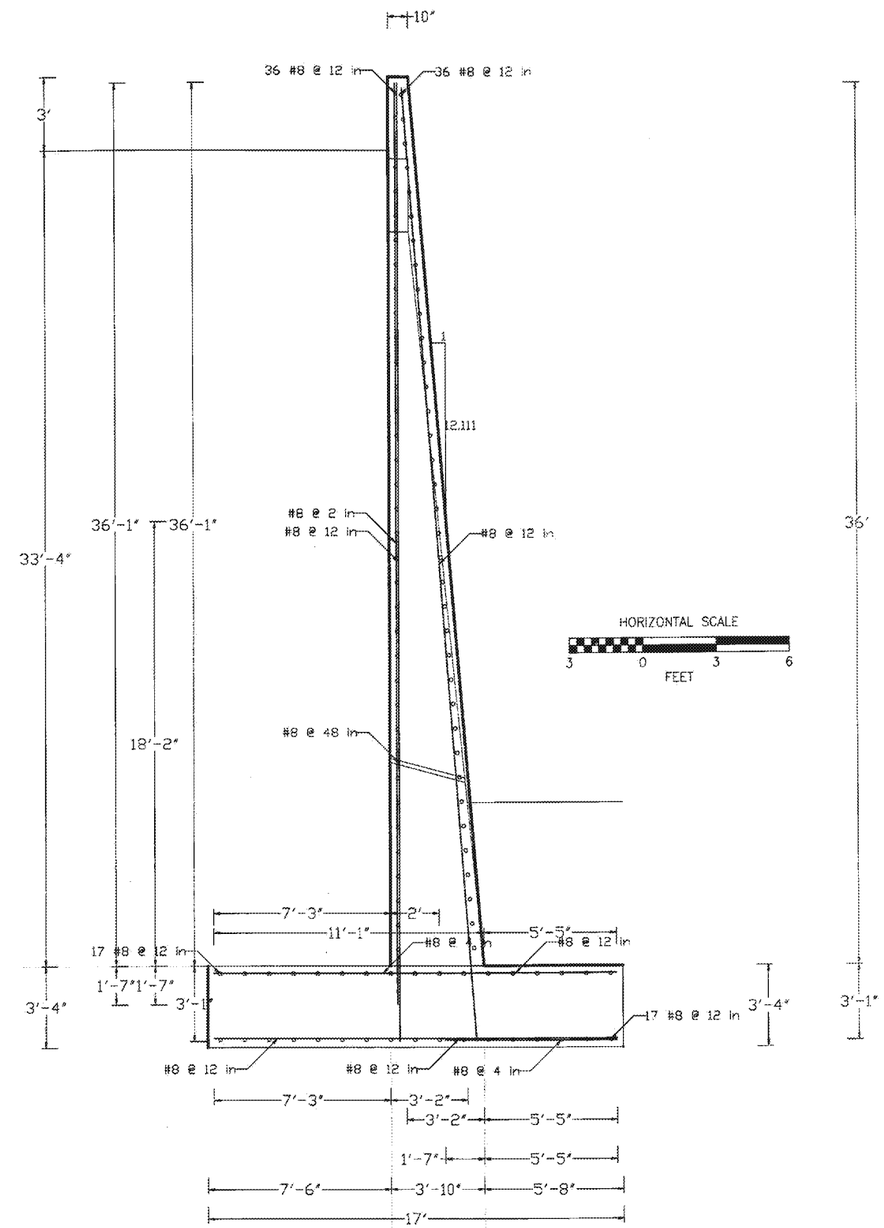

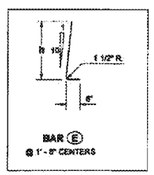

BAR E
@ 1' - 6" CENTERS

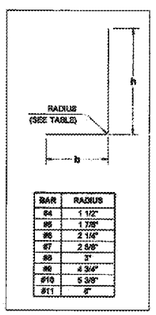

BAR	RADIUS
#4	1 1/2"
#5	1 7/8"
#6	2 1/4"
#7	2 5/8"
#8	3"
#9	4 3/4"
#10	5 3/8"
#11	6"

BAR	MIN. SPLICE
#4	2' - 0"
#5	2' - 0"
#6	2' - 0"
#7	2' - 6"
#8	3' - 5"
#9	4' - 2"
#10	5' - 3"

REINFORCED CONCRETE RETAINING WALL TYPE 2 AND 2SW STANDARD PLAN D-10.15-0

SHEET 1 OF 2 SHEETS

WALL HT H	DIMENSIONS				FOOTING REINFORCEMENT																		STEM REINFORCEMENT				MATERIAL QUANTITY		MAXIMUM SOIL PRESSURE (PSF)			
					BAR E #4		BAR F			BAR H			BAR K					BAR M					BAR J			G #4						
	B	C_v	D	A	LENGTH	h	SIZE	SPA.	LENGTH	SIZE	SPA.	LENGTH	SIZE	SPA.	LENGTH	h	b	SIZE	SPA.	LENGTH	h	b	SIZE	SPA.	LENGTH	LENGTH	CONC. (CY/LF)	STEEL (LB/LF)	SERVICE	STRENGTH	EXTREME SERVICE 1	EXTREME SERVICE 2
32	19' - 3"	8' - 9"	4' - 0"	3' - 10"	5' - 7"	6' - 0"	#6	6"	19' - 0"	#6	6"	19' - 0"	#6	1' - 6"	19' - 2"	18' - 1 1/2"	1' - 3"	#8	1' - 0"	9' - 1"	7' - 11"	1' - 3"	#6	1' - 0"	29' - 4"	29' - 0"	5.36	361.5	4095	3727	7790	5867
34	19' - 9"	9' - 0"	4' - 3"	3' - 11"	5' - 10"	6' - 3"	#6	6"	19' - 6"	#6	7"	19' - 6"	#9	10"	17' - 4 1/2"	18' - 1 1/2"	1' - 5"	#9	10"	10' - 6"	9' - 3 1/2"	1' - 6"	#9	10"	30' - 1"	29' - 9"	5.74	464.5	4214	3992	8012	5632
39	20' - 3"	9' - 3"	4' - 6"	4' - 0"	6' - 1"	6' - 6"	#6	6"	20' - 0"	#6	7"	20' - 0"	#10	1' - 0"	18' - 9"	17' - 4 1/2"	1' - 8"	#10	1' - 0"	12' - 3 1/2"	10' - 9 1/2"	1' - 6"	#10	1' - 0"	37' - 10"	32' - 6"	6.13	487.8	4532	4057	8288	5978

FOR BIDDING PURPOSES THE 35' HIGH RETAINING WALL FROM WASHINGTON STATE DEPARTMENT OF TRANSPORTION STANDARD PLANS D-10.15-01 SHOULD BE USED, REINFORCED CONCRETE RETAINING WALL TYPE 2 AND 2SW.

NO.	DATE	REVISION	BY	CK
1	12/9/19	Intake_Bid_Set	SpG	
2				
3				
4				
5				
6				
7				
8				
9				

Electron HYDRO

DIVERSION REPAIR, SPILLWAY REPLACMENT AND BANK PROTECTION

DIVERSION RETAINING WALL

PIERCE COUNTY WASHINGTON

DESIGN: TAF
DRAWN: VYE
CHECKED: TAF
DATE: 12/9/2019
JOB#: 11011900

SHEET 24 OF 28

DRAWING 24

DATE & TIME: December 16, 2019 15:18
PLOTTED BY: STEVEGS

FILE NAME & LOCATION: E:\Project\ELECTRON\DWG\Design\Intake_Phase-1D\ELE_INTAKE_Steel_Wall_Detail_2020.dwg

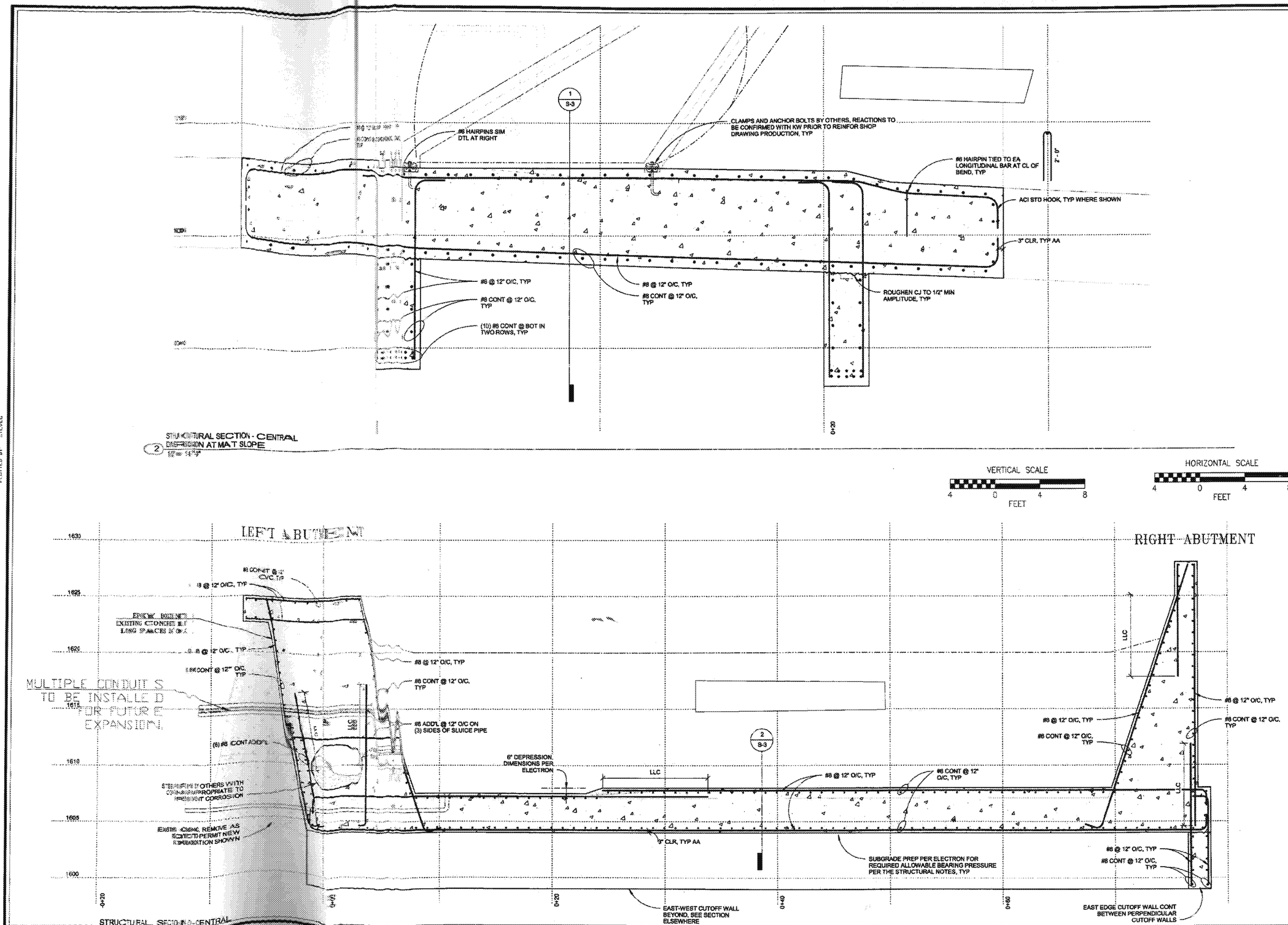

NO.	DATE	REVISION	BY	CK
1	12/9/19	Intake_Bid_Set	SpG	
2				
3				
4				
5				
6				
7				
8				
9				

Electron HYDRO

DIVERSION REPAIR, SPILLWAY REPLACEMENT AND BANK PROTECTION

BLADDER FOUNDATION TYPICAL REINFORCEMENT

PIERCE COUNTY WASHINGTON

SCALE: 1"=4'

DESIGN: TAF
DRAWN: SpG
CHECKED: TAF
DATE: 12/9/2019
JOB#: 11011900

SHEET 25 OF 28

DRAWING 25

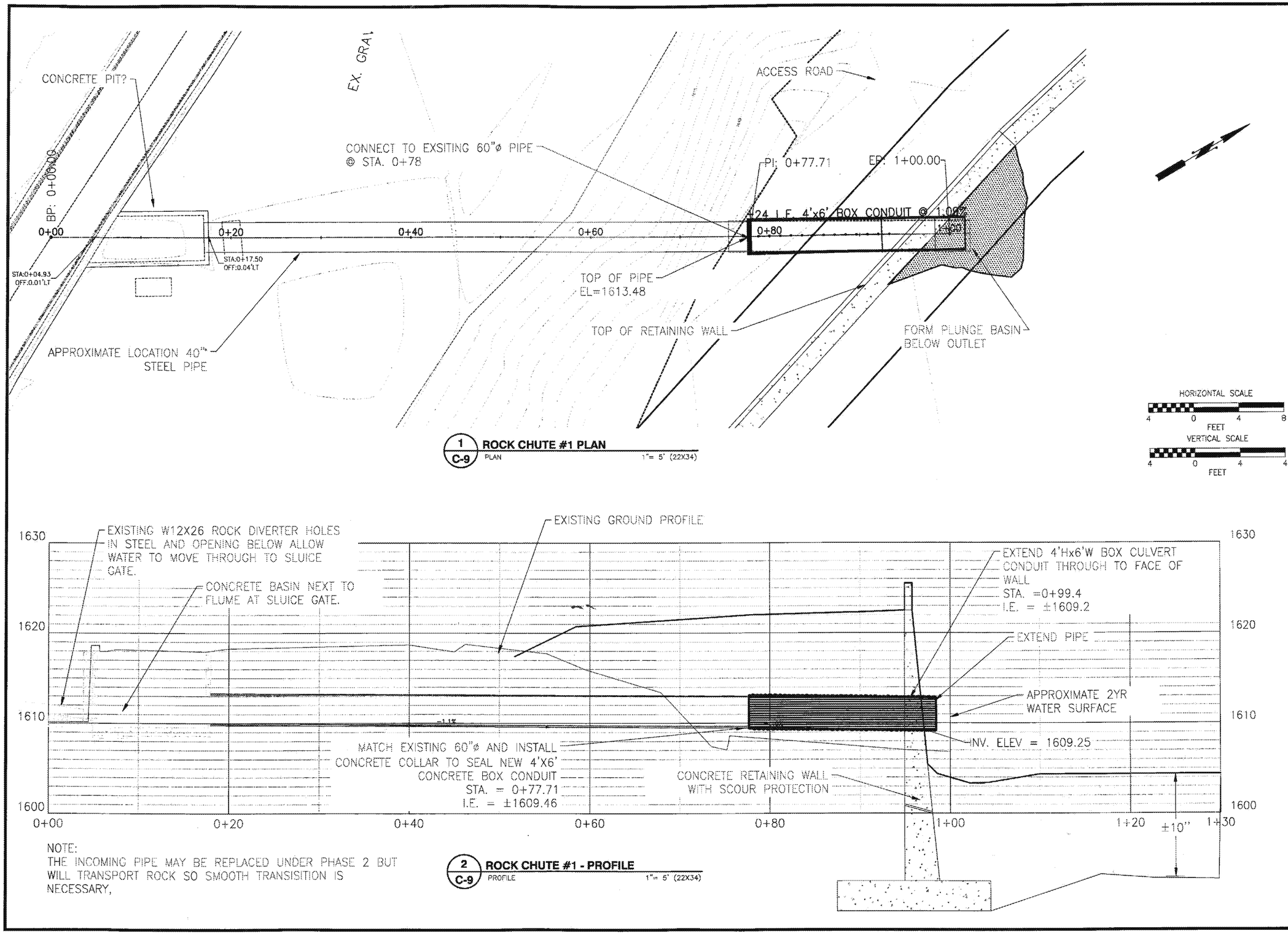

1 C-9 **ROCK CHUTE #1 PLAN**
PLAN 1"= 5' (22X34)

2 C-9 **ROCK CHUTE #1 - PROFILE**
PROFILE 1"= 5' (22X34)

NOTE:
THE INCOMING PIPE MAY BE REPLACED UNDER PHASE 2 BUT WILL TRANSPORT ROCK SO SMOOTH TRANSISITION IS NECESSARY,

NO.	DATE	REVISION	BY	CK
1	12/8/19	Intake_Bld_Set	SpG	
2				
3				
4				
5				
6				
7				
8				
9				

Electron HYDRO EST. 1994

DIVERSION REPAIR, SPILLWAY REPLACEMENT AND BANK PROTECTION

ROCK CHUTE 1
PLAN AND PROFILE

PIERCE COUNTY WASHINGTON

DESIGN: spg
DRAWN: SpG
CHECKED: TAF
DATE: 12/10/2019
JOB#: 11011900

SHEET 26 OF 28

DRAWING 26

DATE & TIME: December 10, 2019 15:33
PLOTTED BY: STEVEG

FILE NAME & LOCATION: E:\Project\ELECTRON\DWG\Design\Intake_Phase-1E\ELE_Intake_Rock_Chute_REV3_2020.dwg

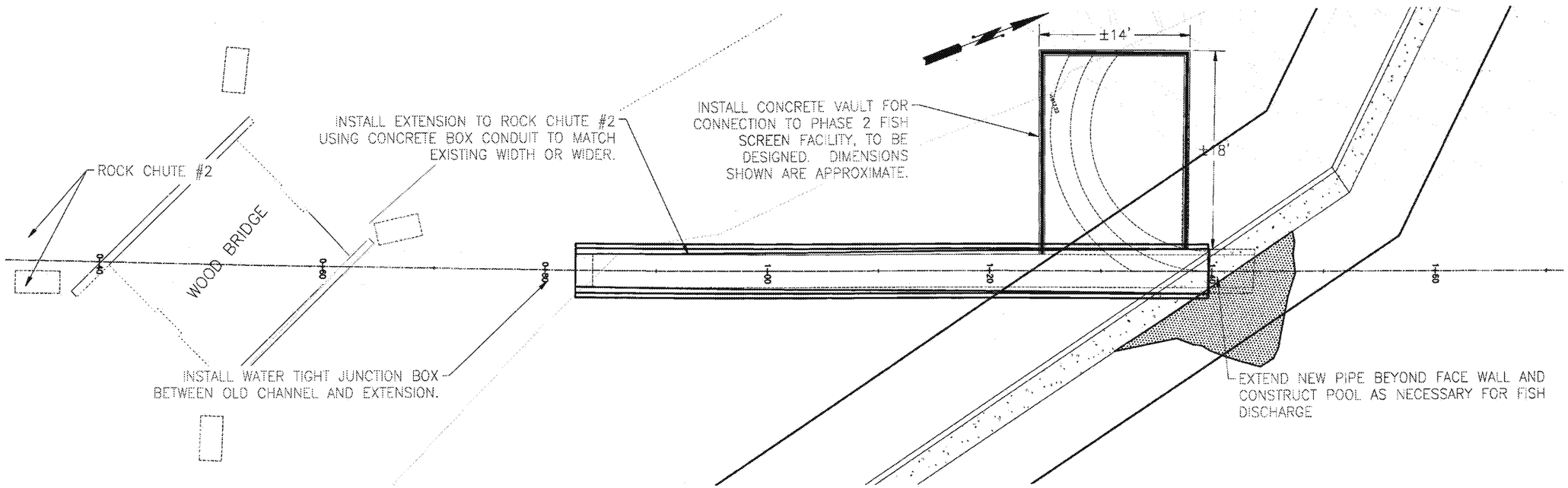

1 / C-10 **ROCK CHUTE #2 - PLAN**
PLAN 1"= 5' (22x34)

HORIZONTAL SCALE
5 0 5 10
FEET

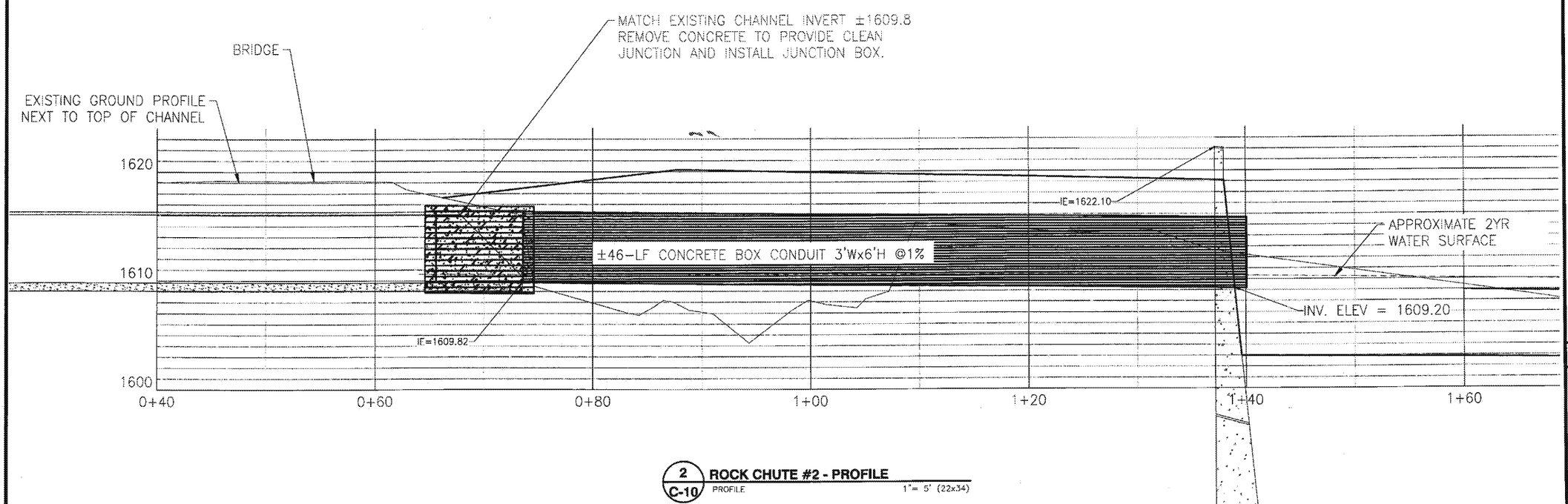

2 / C-10 **ROCK CHUTE #2 - PROFILE**
PROFILE 1"= 5' (22x34)

NO.	DATE	REVISION	BY	CK
1	12/6/19	ROCK CHUTE 2 PLAN AND PROFILE	SPG	
2				
3				
4				
5				
6				
7				
8				
9				

Electron HYDRO

DIVERSION REPAIR, SPILLWAY REPLACEMENT AND BANK PROTECTION

ROCK CHUTE 2 PLAN AND PROFILE

PIERCE COUNTY WASHINGTON

DESIGN: SPG
DRAWN: SpG
CHECKED: TAF
DATE: 12/8/2019
JOB#: 11011900

SHEET 27 OF 28

DRAWING 27

DATE & TIME: December 11, 2019 15:58
PLOTTED BY: STEVEG

FILE NAME & LOCATION: E:\Projects\ELECTRON\DWG\Design\Intake_Phase-1D\DLE_Intake_Rock_Chute_REV3_2020.dwg

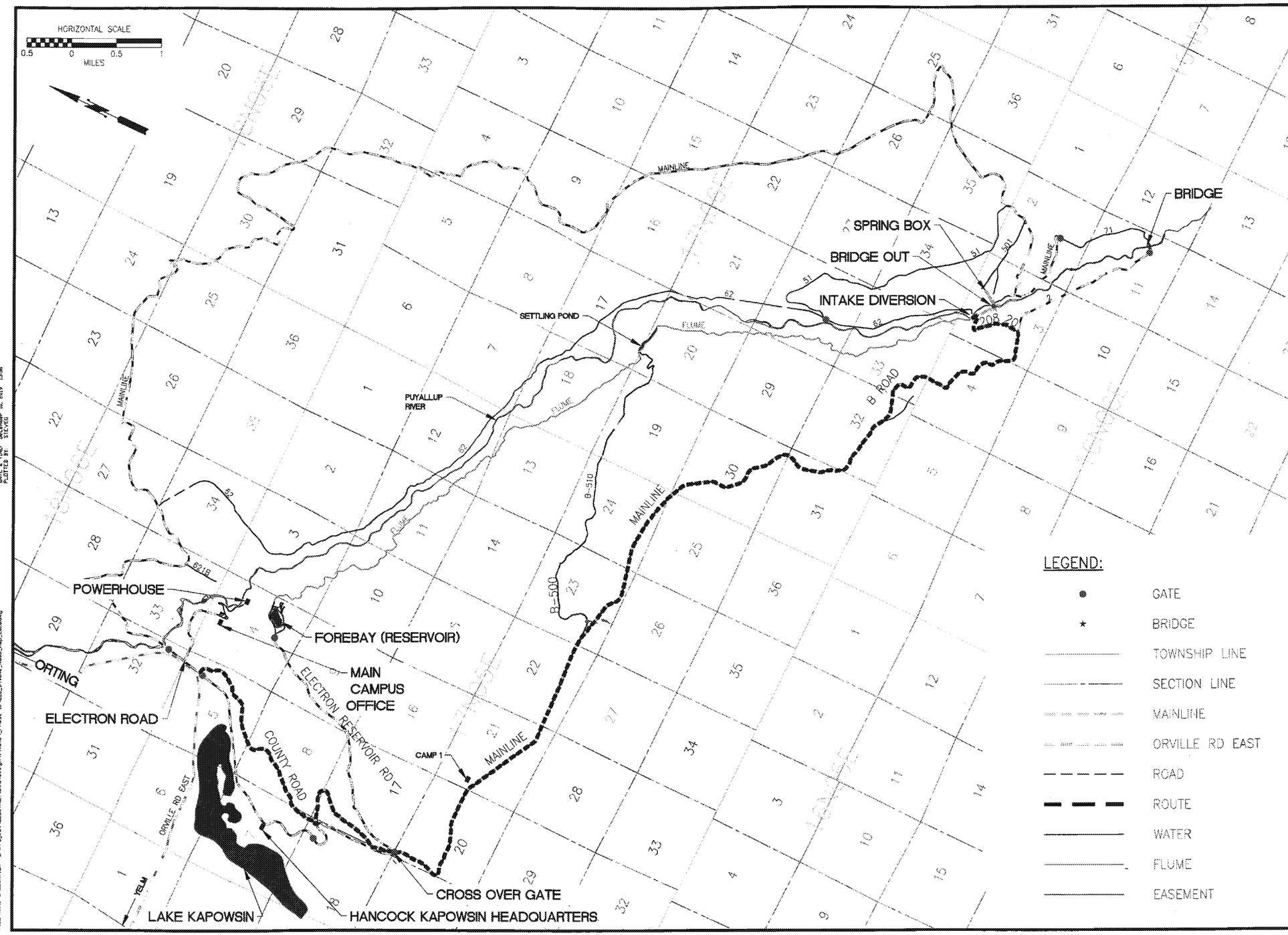

NO.	DATE	REVISION	BY	CK
1	12/9/19	Intake_Bid_Set	Spd	
2				
3				
4				
5				
6				
7				
8				
9				

Electron HYDRO

FLOOD PROTECTION REPAIR, SPILLWAY REPLACMENT AND BANK PROTECTION

ROAD ACCESS MAP

PIERCE COUNTY WASHINGTON

DESIGN: TAF
DRAWN: VYE
CHECKED: TAF
DATE: 12/9/2019
JOB #: 11011900

SHEET 28 OF 28

DRAWING 28

DATE & TIME: December 10, 2019 15:56
PLOTTED BY: STEVEE

FILE NAME & LOCATION: E:\Project\ELECTRON\DWG\Design\Intake_Prose-IEVELE_Intake_Road_Map_2020.dwg