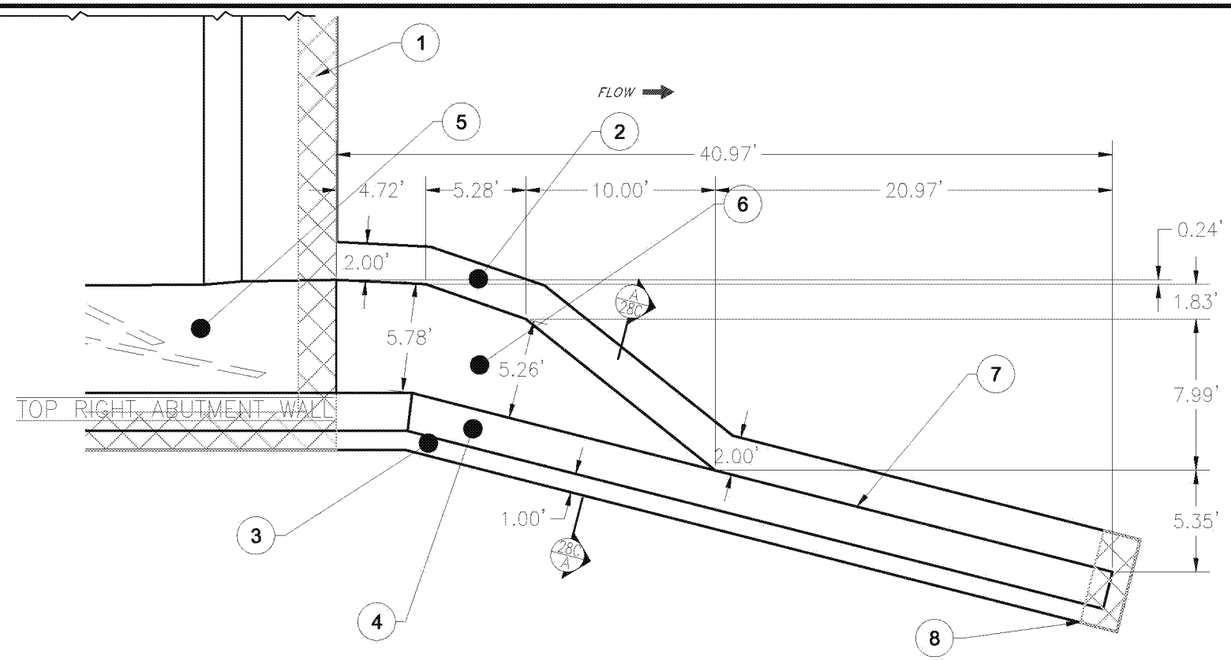

1 / 28C **DOWNSTREAM RIGHT ABUTMENT - Plan View**
PLAN VIEW SCALE: 1"= 4 (FULL SIZE 22X34 SHEET)

NOTES:

1. CUTOFF WALL ALONG DOWNSTREAM EDGE OF BLADDER CONCRETE FOUNDATION.
2. TOP OF CONCRETE FOOTING SLOPED AT 5%, 2' WIDTH TYPICALLY ON INSIDE OF DOWNSTREAM RIGHT ABUTMENT WALL.
3. TOP OF CONCRETE TYPICALLY 1' WIDE AND 5% SLOPE.
4. TOP OF CONCRETE 2' WIDE SLOPED FROM 1625.0 TO 1618.0.
5. CONCRETE FACE SLOPE 1H:3V
6. CONCRETE FACE SLOPE TRANSION FROM 1H:3 TO VERTICAL.
7. CONCRETE FACE IS VERTICAL.
8. CUTOFF WALL AT END OF ABUTMENT
9. WOOD SPILLWAY TO BE REMOVED AND REATTACHED CUTOFF WALLS TO BE INTERGRADED TO ACT WITH EXISTING DIVERSION SPILLWAY CUTOFF STRUCTURES.

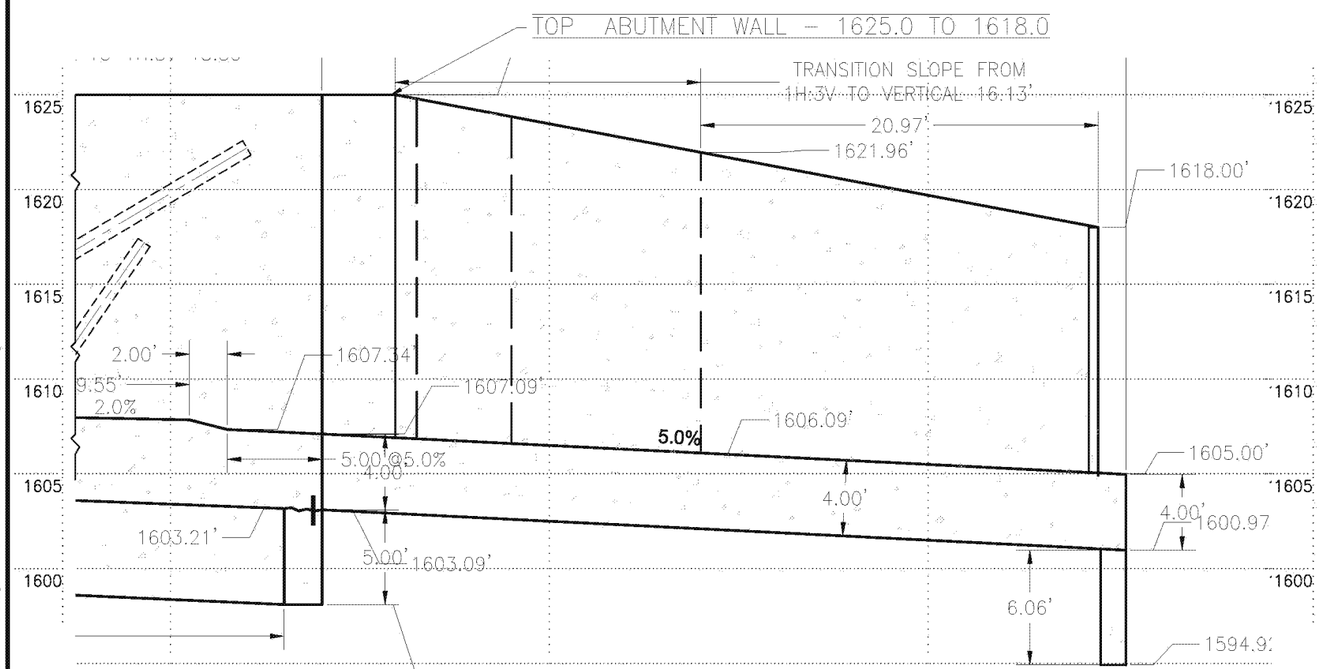

2 / 28C **PROFILE A-A - NEAR CENTER OF BLADDER**
SECTION VIEW SCALE: 1"= 4' (FULL SIZE 22X34 SHEET)

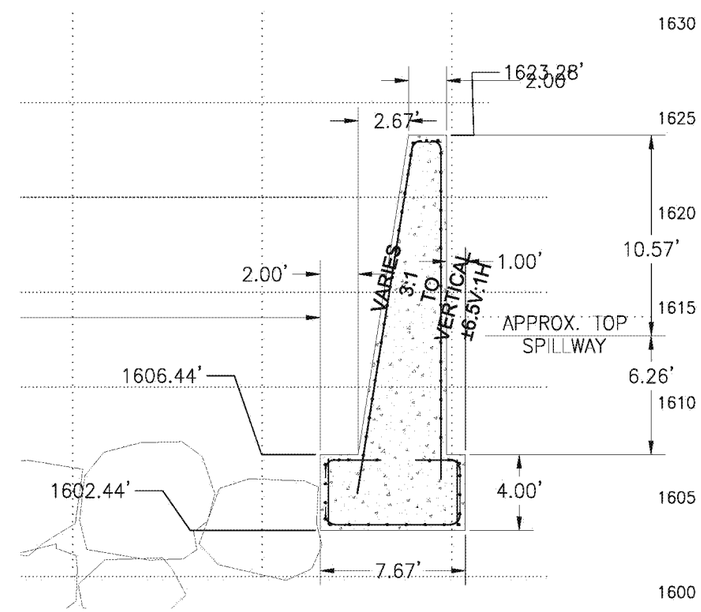

2 / 28C **SECTION A-A - DOWNSTREAM RIGHT ABUTMENT**
SECTION VIEW SCALE: 1"= 4' (FULL SIZE 22X34 SHEET)

HORIZONTAL SCALE
4 0 4 8
FEET
VERTICAL SCALE
4 0 4 8
FEET

NO.	DATE	REVISION	BY	CK
2	12/29/19	ADDENDUM 1	SpG	
1	12/8/19	Intake_Bid_Set	SpG	

Electron HYDRO

DIVERSION REPAIR, SPILLWAY REPLACEMENT AND BANK PROTECTION
28C–DOWNSTREAM RIGHT ABUTMENT
PIERCE COUNTY WASHINGTON

DESIGN: TS
DRAWN: SpG
CHECKED:
DATE: 12/8/2019
JOB#: 11011900

SHEET 28C OF 41

DRAWING 28C

DATE & TIME: December 30, 2019 12:56
PLOTTED BY: STEVEG

FILE NAME & LOCATION: E:\Project\ELECTRON\DWG\Design\Intake_Phase-1C\ELE_BLADDER-CONC_2020.dwg