Bacteria, Sulfate-reducing

DOC316.53.01326

Visual determination

Semi-quantitative

SRB-BART™[1]

Scope and application: For the determination of sulfate-reducing bacteria in brine solutions, produced waters and hydraulic fracturing waters.

[1] SRB-BART is a trademark of Droycon Bioconcepts Inc.

Test preparation

Before starting

Do not touch the inner surface of the tube or lid. Keep contamination out of the tube and lid. Use the aseptic technique.
Set the caps on a clean surface with the flat surface down.
Sulfate-reducing bacteria (SRB) grow primarily deep within biofilms and not directly in water. Make sure to get a representative sample.
Review the Safety Data Sheets (MSDS/SDS) for the chemicals that are used. Use the recommended personal protective equipment.
Dispose of reacted solutions according to local, state and federal regulations. Refer to the Safety Data Sheets for disposal information for unused reagents. Refer to the environmental, health and safety staff for your facility and/or local regulatory agencies for further disposal information.
Sterilize the reacted sample before disposal. Refer to Disposal on page 3.

Items to collect

Description	Quantity
BART Test for sulfate-reducing bacteria (SRB)	1

Refer to Consumables and replacement items on page 4 for order information.

Test procedure

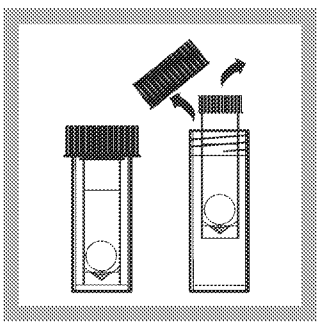

1. Remove the inner tube from the outer tube.

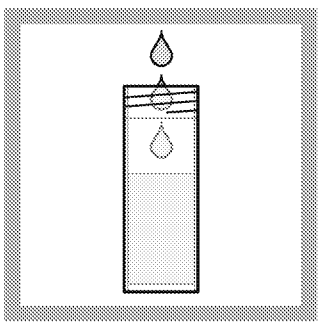

2. Pour at least 20 mL of sample in the outer tube.

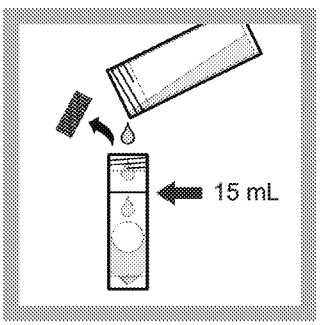

3. Fill the inner tube to the fill line with the sample that is in the outer tube. Tighten the cap on the inner tube.

Discard the unused sample in the outer tube.

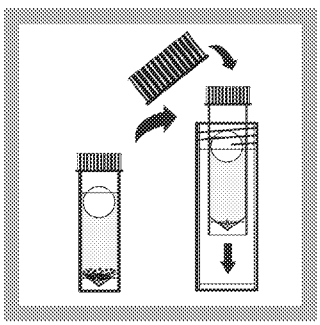

4. Put the inner tube in the empty outer tube. Tighten the cap on the outer tube.

Do not shake or swirl the tubes after the sample is added. Let the ball float to the top with no help.

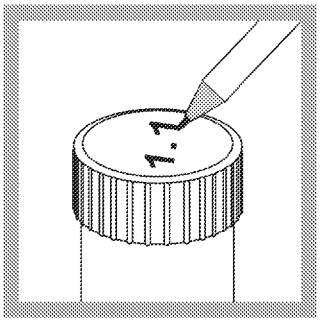

5. Write the date and sample name on the outer tube.

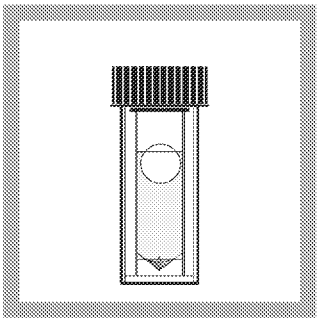

6. Keep the tube at room temperature and away from direct sunlight for 8 days.

Do not move the tube.

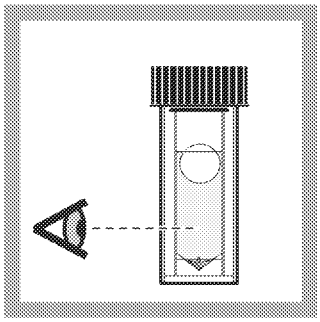

7. Examine the tube each day. Record the date when a reaction is first seen. Refer to Test results on page 2.

Interferences

Interfering substance	Interference level
Hydrogen Sulfide (H_2S)	More than 20 ppm can give a false positive. Remove hydrogen gas from the sample as follows: Add 30 mL of sample to the outer tube. Put the outer tube cap on the tube. Shake the tube for 10 seconds. Do not move the tube for 20 seconds. Use this sample in the test procedure.

Test results

Presence/Absence

When sulfate-reducing bacteria are in the sample, a black slime forms in the tube. Refer to Figure 1.

Figure 1 Negative versus positive test results

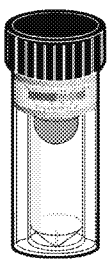

Negative (absent/non-aggressive)

The solution has no black slime.

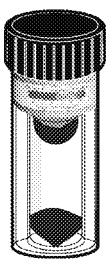

Positive (present/aggressive)

A black slime ring forms around the ball and/or there is a black slime growth at the bottom of the tube.

Make an estimate of the bacteria population

If the test result is positive, make an estimate of the bacteria population and the aggressivity. Refer to Table 1. A faster reaction occurs when the bacteria population is high.

Table 1 Approximate bacteria population

Days to reaction	Approximate SRB population (cfu/mL)	Aggressivity
1	2,200,000	Very high
2	500,000	High
3	115,000	High
4	27,000	High

ED_005025_00011052-00002

Table 1 Approximate bacteria population (continued)

Days to reaction	Approximate SRB population (cfu/mL)	Aggressivity
5	6000	Moderate
6	1400	Moderate
7	325	Moderate
8	75	Low

Advanced test information

If the test result is positive, examine the tubes for dominant bacteria. Refer to Figure 2.

Figure 2 Dominant bacteria

Dense anaerobic bacteria dominated by Desulfovibrio	Aerobic SRB with aerobic slime forming heterotrophs	Aerobic and anaerobic SRB	Anaerobic bacteria
Black slime on the bottom only	Black slime around the ball only	Black slime on the bottom and around the ball	Cloudy solution

Summary of method

When sulfate-reducing bacteria (SRB) are in the sample, sulfate is reduced to hydrogen sulfide (H_2S) in the SRB-BART tube during incubation. The H_2S reacts with the ferrous iron in the tube to form black iron sulfides. This sulfide commonly forms in the base as a black slime and/or around the ball as an irregular black ring.

Sulfate-reducing bacteria typical grow in anaerobic conditions deep within biofilms (slimes) as a part of a microbial community. Sulfate-reducing bacteria may not be in the free-flowing water over the site of the fouling. Sulfate-reducing bacteria can cause problems such as strong odors, blackening of equipment, slime formations and the start of corrosive processes.

Disposal

Sterilize the reacted sample before disposal. Refer to Figure 3.

ED_005025_00011052-00003

Figure 3 Disposal

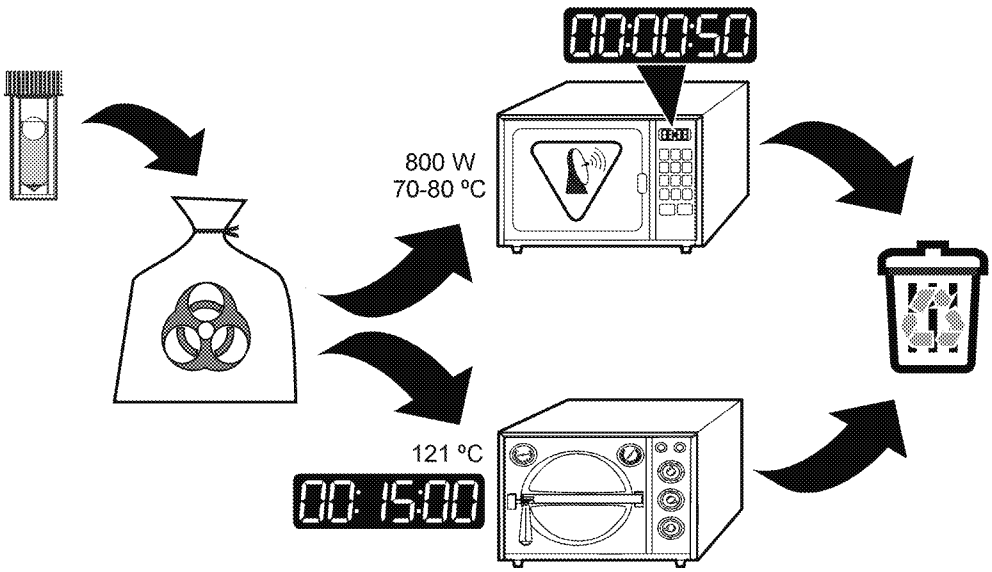

Consumables and replacement items

Required reagents

Description	Quantity/Test	Unit	Item no.
BART Test for sulfate-reducing bacteria (SRB)	1	9/pkg	2432409
BART Test for sulfate-reducing bacteria (SRB)	1	27/pkg	2432427

FOR TECHNICAL ASSISTANCE, PRICE INFORMATION AND ORDERING:
In the U.S.A. – **Call toll-free 800-227-4224**
Outside the U.S.A. – **Contact the HACH office or distributor serving you.**
On the Worldwide Web – **www.hach.com**; E-mail – **techhelp@hach.com**

HACH COMPANY
WORLD HEADQUARTERS
Telephone: (970) 669-3050
FAX: (970) 669-2932

© Hach Company/Hach Lange GmbH, 2012–2016. All rights reserved.

07/2016, Edition 4