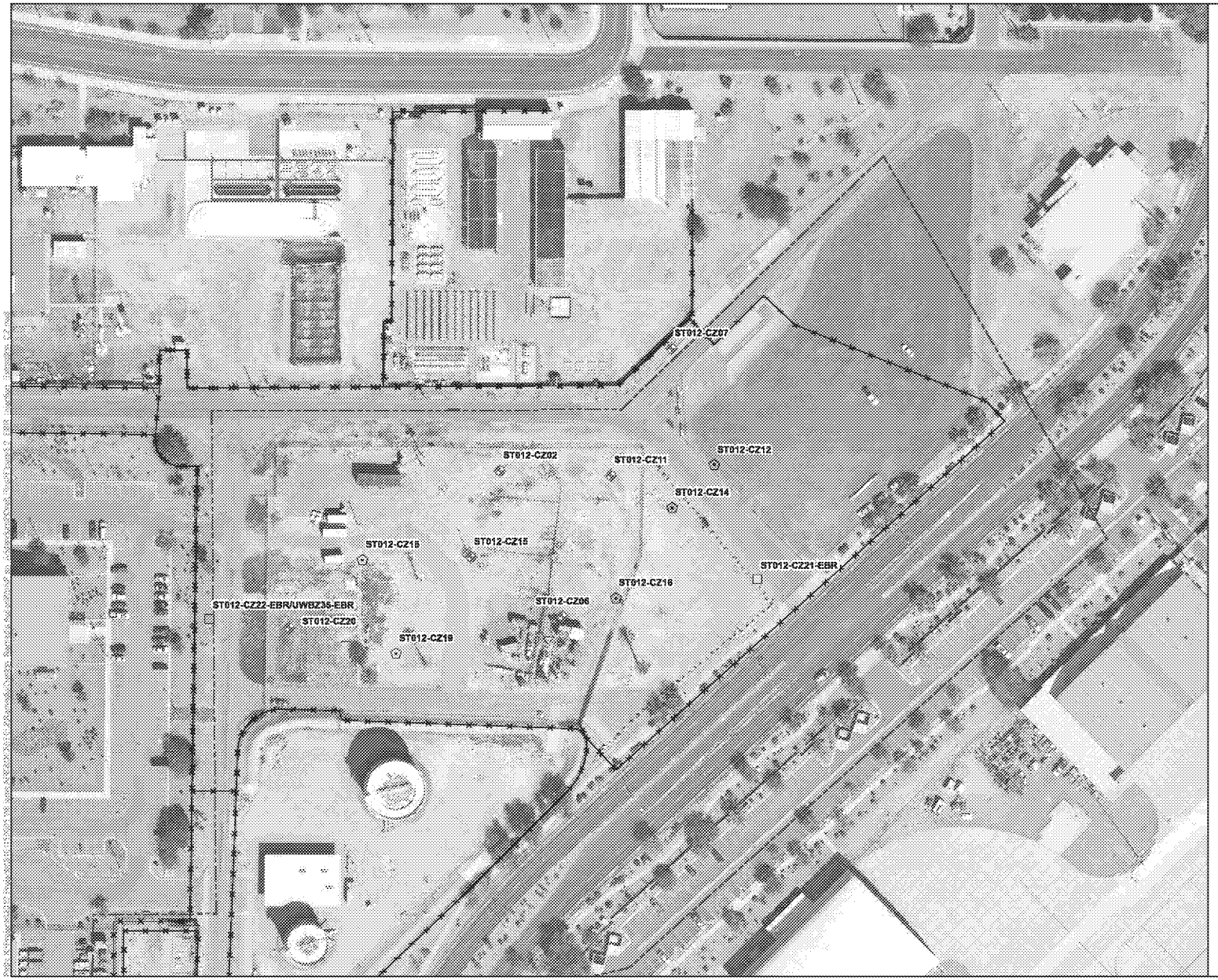

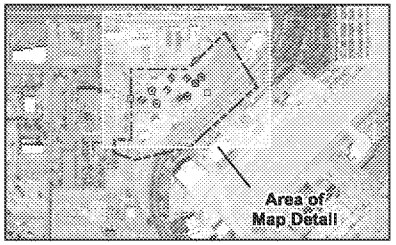

Legend

- Proposed Extraction Well Location
- Proposed Injection Well Location
- Extraction Well Location
- Injection Well Location
- Groundwater Monitoring Well Location
- Fence Line
- ST012 Site Boundary

Notes:

ST012-MW12	Monitoring Well Identification
CZ	Cobble Zone
EBR	Enhanced Bioremediation

0 25 50 100 Feet

N

Draft Final Addendum #2
Remedial Design/Remedial Action
Work Plan
Site ST012 - Former Williams Air Force Base
Mesa, Arizona

EBR Injection, Extraction, and Monitoring Well Locations - CZ

FIGURE 3-2

Job No.:	9101110001
PM:	DS
Date:	3/8/2016
Scale:	1" = 100'

The map shown here has been created with all due and reasonable care and is strictly for use with Amec Foster Wheeler Project Number 9101110001. This map has not been modified by a licensed land surveyor, and any third party use of this map comes without warranties of any kind. Amec Foster Wheeler assumes no liability, direct or indirect, whatsoever for any such third party or unintended use.

amec foster wheeler

ED_005025_00008245-00001

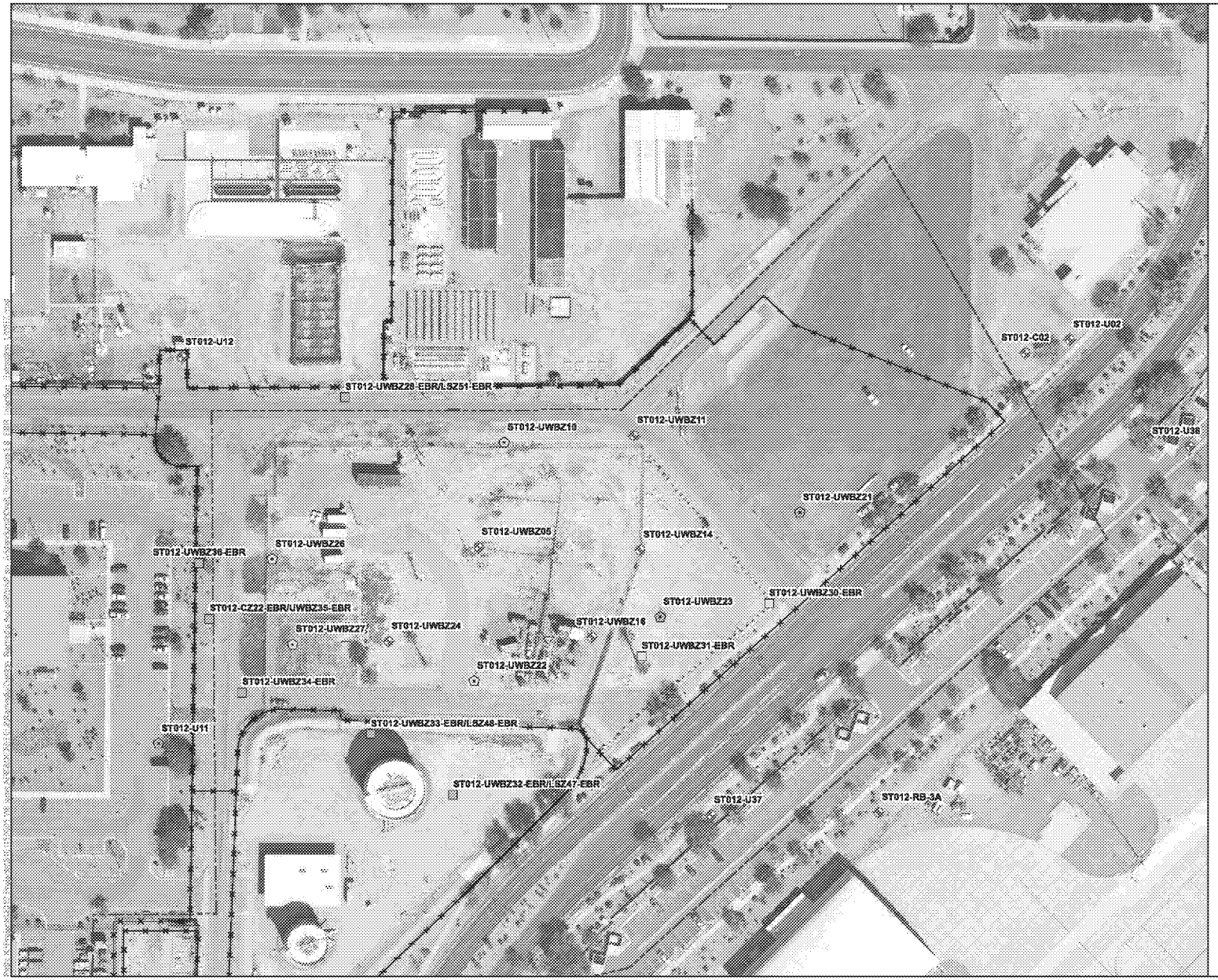

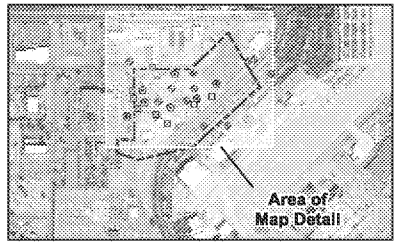

Legend

- Proposed Extraction Well Location
- Proposed Injection Well Location
- Extraction Well Location
- Injection Well Location
- Groundwater Monitoring Well Location
- Fence Line
- ST012 Site Boundary

Notes:

ST012-MW12	Monitoring Well Identification
EBR	Enhanced Bioremediation
UWBZ	Upper Water Bearing Zone

0 25 50 100 Feet

N

Draft Final Addendum #2
Remedial Design/Remedial Action
Work Plan
Site ST012 - Former Williams Air Force Base
Mesa, Arizona

EBR Injection, Extraction, and Monitoring Well Locations - UWBZ

FIGURE 3-3

Job No.:	9101110001
PM:	DS
Date:	3/8/2016
Scale:	1" = 100'

amec foster wheeler

The map shown here has been created with all due and reasonable care and is strictly for use with Amec Foster Wheeler Project Number 9101110001. It has neither not been verified by a licensed land surveyor, and any third party use of this map comes without warranties of any kind. Amec Foster Wheeler assumes no liability, direct or indirect, whatsoever for any such third party or unintended use.

ED_005025_00008245-00002

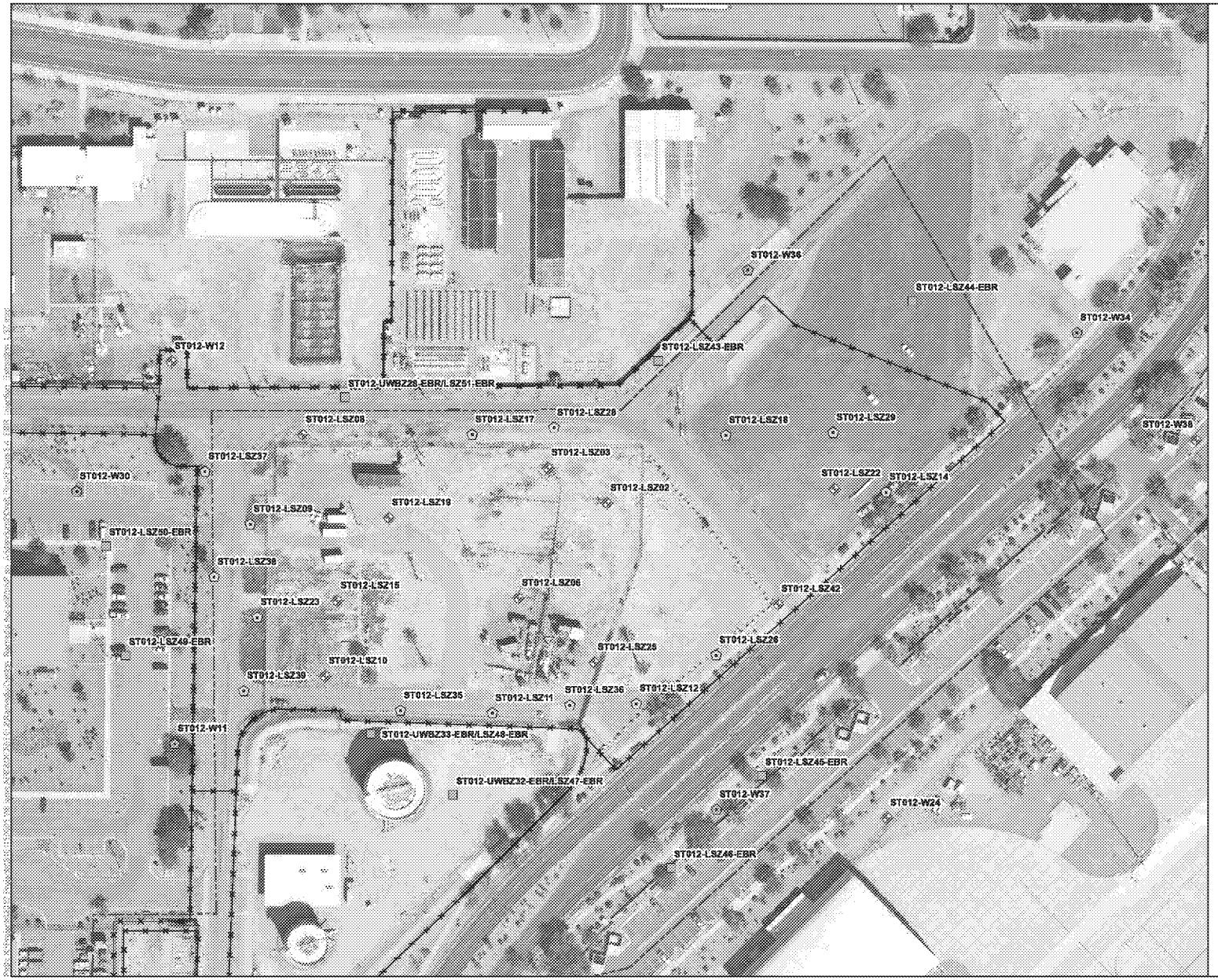

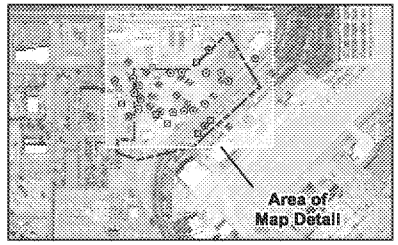

Legend

- Proposed Extraction Well Location
- Proposed Injection Well Location
- Extraction Well Location
- Injection Well Location
- Groundwater Monitoring Well Location
- Fence Line
- ST012 Site Boundary

Notes:

ST012-MW12	Monitoring Well Identification
EBR	Enhanced Bioremediation
LSZ	Lower Saturated Zone

0 25 50 100 Feet

N

Draft Final Addendum #2
Remedial Design/Remedial Action
Work Plan
Site ST012 - Former Williams Air Force Base
Mesa, Arizona

EBR Injection, Extraction, and Monitoring Well Locations - LSZ

FIGURE 3-3

Job No.:	9101110001
PM:	DS
Date:	3/8/2016
Scale:	1" = 100'

amec foster wheeler

The map shown here has been created with all due and reasonable care and is strictly for use with Amec Foster Wheeler Project Number 9101110001. This map has not been certified by a licensed land surveyor, and any third party use of this map comes without warranties of any kind. Amec Foster Wheeler assumes no liability, direct or indirect, whatsoever for any such third party or unintended use.

ED_005025_00008245-00003

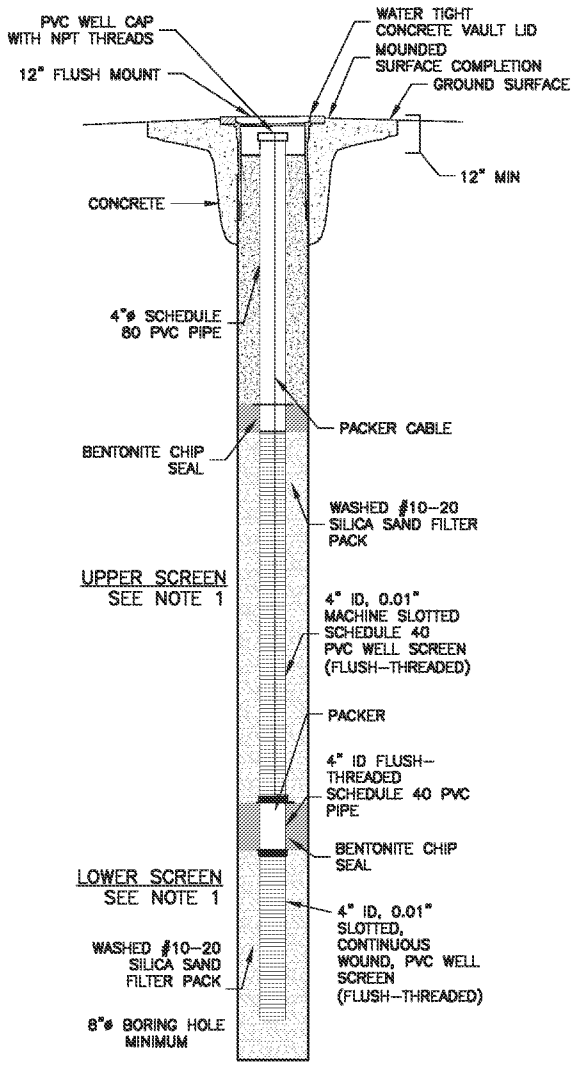

DOUBLE-SCREENED INJECTION WELL

NTS

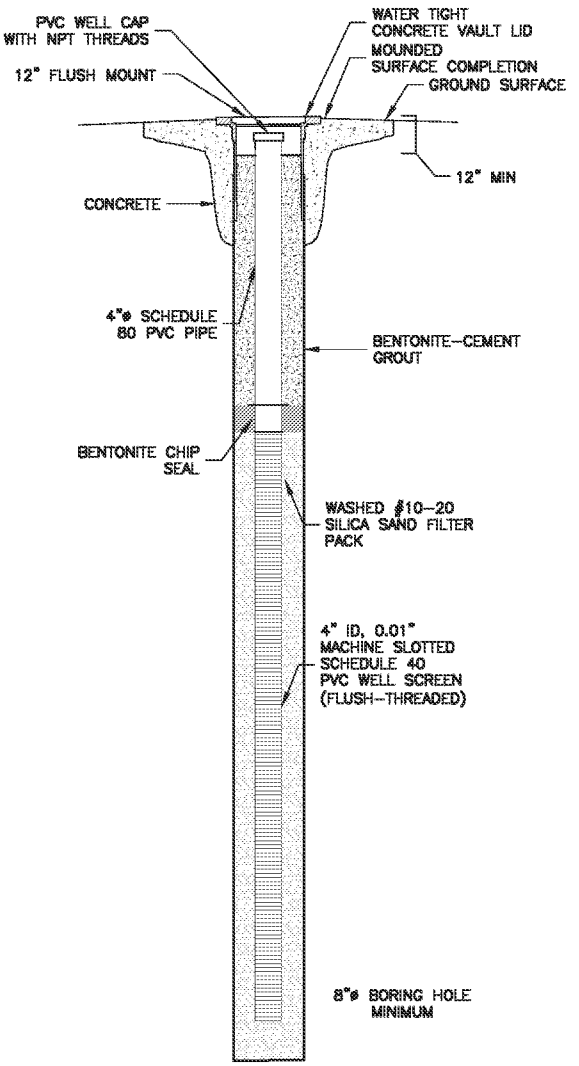

SINGLE-SCREENED INJECTION
OR EXTRACTION WELL

NTS

NOTE:

1. Screened intervals as specified in Table 4-1.

Abbreviations

BGS - below ground surface
ID - inner diameter
PVC - polyvinyl chloride
HDPE - high density polyethylene
NPT - national pipe thread
NTS - not to scale
VFD - variable frequency drive
' - feet
Ø - diameter
" - inches

Draft Final, Addendum #2
Remedial Design/Remedial Action Work Plan
Site ST012-Former Williams Air Force Base
Mesa, Arizona

Injection and Extraction Well Details

FIGURE		
4-1	Job No.	9101110001
	PM:	DS
	Date:	09/23/2015
	Scale:	NTS

amec foster wheeler

The map shown here has been created with all due and reasonable care and is strictly for use with Amec Foster Wheeler project number 91-0111-0001. This map has not been certified by a licensed and surveyor, and any third party use of this map comes without warranties of any kind. Amec Foster Wheeler assumes no liability, direct or indirect, whatsoever for any such third party or unintended use.