World Water Day
2010
Clean Water for a Healthy World

Africa's Water Quality

A Chemical Science Perspective

A report by the **Pan Africa Chemistry Network**
March 2010

RSC | Advancing the Chemical Sciences

syngenta

ED_004926A_00025370-00001

THE ROYAL SOCIETY OF CHEMISTRY

The RSC is an international learned society for advancing the chemical sciences and also the UK's professional body for chemical scientists. Supported by over 46,000 members worldwide and by an internationally acclaimed publishing business, RSC's activities span education and training, contributing to national and international science policy, conference organization and promotion of the chemical sciences to the wider public. RCS's relationships with leading national chemical societies and international companies place the RSC at the heart of a global network of 300,000 chemical scientists.

The RSC's headquarters are in London with a further office based in Cambridge. Other RSC offices are located in China (Beijing and Shanghai), in the USA in Philadelphia and in 2010 an office will be opened in Bangalore, India.

www.rsc.org

SYNGENTA

Syngenta is one of the world's leading companies with more than 25,000 employees in over 90 countries dedicated to our purpose: Bringing plant potential to life. Through world-class science, global reach and commitment to our customers we help to increase crop productivity, protect the environment and improve health and quality of life.

www.syngenta.com

PAN AFRICA CHEMISTRY NETWORK

The Pan Africa Chemistry Network (PACN) was set up by the Royal Society of Chemistry, with a special focus on the Millennium Development Goals aimed at advancing the chemical sciences across Africa, and represents an innovative approach to working with universities, schools, scientists, teachers, and students. The PACN is engaging with chemical societies throughout Africa, together with the Federation of African Chemical Societies. A coordinated approach is crucial to success. The PACN, with the support of Syngenta has established regional hubs in Ethiopia and Kenya, and the RSC has increased the existing collaboration with universities and other partners in South Africa. These can respond to the local needs of scientists whilst building extensive relationships across the continent.

The PACN seeks to create a self-sustaining science base in Africa, and it is encouraging the application of best practices to solving local challenges and enabling contributions to global scientific knowledge. It aims to:

- enhance collaboration between governments, universities, industry and communities;
- support the establishment of a sustainable science base across the continent, which attracts students to scientific careers and promotes public appreciation of the role of chemical science in Africa's future;
- disseminate information to researchers and entrepreneurs about available funding opportunities;
- coordinate support for education at all levels, from low-cost practical school teaching to training researchers in the use of modern research instruments;
- encourage the development of 'Centres of Excellence' through the installation of modern analytical technologies and coordinated training.

www.rsc.org/pacn

ED_004926A_00025370-00002

Contents

Background 4

Foreword by H.E. Joaquim Alberto Chissano 5

Key messages 6

1. Water, food and poverty: the context 7

2. Provision of water resources in Africa 8

3. Water and food production 10

4. Water quality: monitoring environmental health 12

5. Technologies to protect and improve water quality 14

6. Building scientific and human capacity 18

7. Building a sustainable water security system 19

8. References 21

ED_004926A_00025370-00003

BACKGROUND

On 26th - 29th August 2009 the Pan Africa Chemistry Network (PACN) held the *Sustainable Water Conference*, hosted by the University of Nairobi, Kenya, and sponsored by the RSC and Syngenta. The findings and recommendations contained within this report represent the views of the 180 scientists and practitioners that attended this conference from 14 different countries in Africa, as well as the UK, Switzerland, Colombia and Uruguay.

During this three-day meeting, delegates addressed the scientific issues surrounding sustainable water. The concluding open forum called for an increased understanding of the role of scientific research in finding solutions to issues relating to water, especially water quality, in Africa. It also called for an increased scientific voice within African Governments, together with a shift towards fostering a science-based water management culture.

This report is unique in that it summarises the conclusions and recommendations emerging from the *PACN Sustainable Water Conference*, representing the opinions and knowledge of some of Africa's best scientists in the field of sustainable water research and development. It also includes the feedback received at the high level workshop organized at RSC headquarters in London, where experts on water and African issues were invited to discuss a draft of this report.

The report will be launched in Nairobi at the United Nations World Water Day 2010 "*Communicating Water Quality Challenges and Opportunities*", with the intention of alerting the governments of the African nations for which water quality remains an urgent issue. The document also serves as a roadmap for the numerous scientists in African academia, government and industry who will ultimately be tasked with undertaking the recommendations outlined herein.

The recommendations presented in this report specify '*fit for purpose*' solutions for water wherever it is used: for drinking, for growing food, and to satisfy domestic and industrial needs. It is recognised that biological, physical and chemical contaminants are all major contributors to sub-standard water quality in Africa, and special attention is given to the latter. This report emphasises the central role that the chemical sciences will play, in particular through 'Centres of Excellence' in analytical chemistry, in the evaluation and monitoring of water quality.

In the light of climate change and massive population expansion, the vital role that Africa's scientists must play in meeting water quality challenges cannot be overestimated. These challenges present the opportunity for genuine partnership and collaboration between scientific communities and governments, both across the African states and internationally. The ultimate goal of this report is to raise the profile of water quality in policy agenda, so that water quality is always considered alongside water quantity.

Report steering committee

Dr John Clough, Syngenta

Dr Simon Cook, CGIAR, Colombia

Professor Eric Odada, University of Nairobi, Kenya

Dr Elizabeth Milsom, Royal Society of Chemistry

Mr Steve Ntifo, Water UK

Dr Alejandra Palermo, Royal Society of Chemistry

Ms Alison Sapiets, Syngenta

Professor Shem O. Wandiga, University of Nairobi, Kenya

Professor Paul Worsfold, University of Plymouth, UK

Report contributors

Professor Anthony Gachanja, Jomo Kenyatta University of Agriculture and Technology, Kenya

Eng. Pedro Mastrangelo, CSI Ingenieros, Uruguay

Professor Kevin McGuigan, The Royal College of Surgeons in Ireland, Ireland

Ms Presthantie Naicker, University of KwaZulu-Natal, South Africa

Professor Feleke Zewge, Addis Ababa University, Ethiopia

Many others also made valuable contributions including participants at the open forum and the workshop.

ED_004926A_00025370-00004

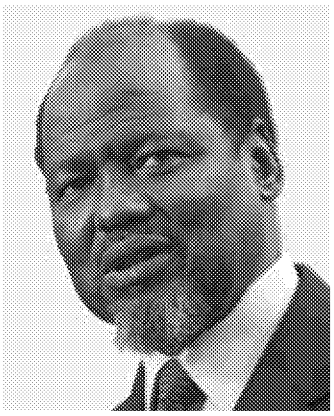

FOREWORD

Water is essential for life. Safe, abundant water is vital to our ability to prosper and to fulfil our potential. Without it, we face a continual decline in our well-being, poverty and hunger, and increasing levels of conflict.

Across Africa, a third of us have no access to clean water, and almost two thirds no access to clean sanitation, causing widespread suffering from malaria, typhoid, dysentery and many other diseases. Apart from this effect upon our health, the loss of productivity that results from water-related illnesses holds back our progress.

The population in many African countries is growing rapidly each year, averaging 2.5% across sub-Saharan African, but the lack of safe water and sanitation reduces our economic growth at twice that rate. And a growing population must be properly fed. We need to increase our food production by half in the next twenty years. How will we achieve this without reducing the amount and quality of the remaining water resources which we will need for drinking and sanitation? Clearly, the provision of sustainable, clean water for our people is of the highest priority.

The effects of climate change make the challenge of conserving our precious water resources even more difficult. The people of Africa that are responsible for less than 5% of the pollution which has changed the planet's atmosphere, will feel the worst of its impact in terms of increased flooding and drought. Climate change is a global problem, and it places the onus upon the global community to live up to their commitments to reduce by half the proportion of people without access to safe drinking water and basic sanitation.

Yet despite all the obstacles we face, I remain an optimist when it comes to Africa's agricultural development and to water sustainability.

The introduction of new forms of irrigation pioneered by African scientists and research institutions has the potential to transform the way staple foods are cultivated. Today, only 10% of Africa's cultivated land is irrigated. Imagine what we can do if this percentage is increased in a way which also does not overburden our water supplies.

We need to make more use of fertilizers to feed nutrient deficient soils, and of modern crop varieties and new farming techniques to improve yields. We can see already what can be achieved with determination, vision and partnership.

With the right policies and commitment, Africa has the chance to match, indeed better the Asian agricultural miracle of the last generation. Better because we can do so in an environmentally sustainable way, which takes fully into account the fact that 80% of Africans are dependent in some way on agriculture.

Sustainable supplies of water, its better management and protection are the key to this success – just as increased agricultural productivity holds the key to spreading prosperity and our other development goals.

This report relies upon the collective knowledge of scientists from across Africa, detailing how we can improve our capacity to tackle these challenges by establishing new centres of scientific excellence and by bringing together the best minds in science with governments to ensure water sustainability.

I have no doubt of the scale of the challenge, but I am also optimistic that with vision and will, we can encourage governments across Africa to adopt these solutions and put them into practice.

H.E. Joaquim Alberto Chissano
Former President of Mozambique
Chairperson, Africa Forum for Former African Heads of State and Government
Chairperson, Joaquim Chissano Foundation

ED_004926A_00025370-00005

KEY MESSAGES

1. Scientists working within Africa have the knowledge, expertise and potential to help formulate and implement sustainable water strategies. Sound policy is based on the best available scientific evidence, so it is essential that scientists make their voices heard within Government. Institutions must support a dialogue between scientists and policy makers to ensure that recommendations can be adopted and that a culture of science-based water management is established.

2. Increasing Africa's capacity in analytical chemistry is imperative in order to support chemical monitoring and water management activities. The creation of centres of excellence in analytical chemistry, with the appropriate level of funding, will be essential to achieve a critical mass of scientifically qualified and technically trained personnel. These centres should also play a role in facilitating networking activities between African and non-African scientists in water research and management, and ensuring that water quality data is shared.

3. Improving water quality is a vital requirement for better public health, productivity and economic prosperity. Even though Africa has abundant water resources, these are not evenly distributed across the continent, and rainfall patterns are becoming increasingly unpredictable due to climate change. A growing number of African countries are water stressed, with relatively low water resources per capita. Where there is water its quality is often deteriorating. This must be addressed through innovative water management and water treatment technologies, which are appropriate for local needs, coupled with adequate monitoring systems.

4. Food production accounts for a large proportion of total water use. Any comprehensive strategy to address water scarcity and quality must also address sustainable food production. The conversion rates of water to food in Africa are amongst the lowest in the world, but there is enormous potential for improvement in the efficiency of water use as well as land productivity. Africa has the potential to become the bread basket for the world, but the challenge of providing adequate supplies of water for agriculture, whilst maintaining a sufficient source of good quality water for other purposes, must be addressed for this potential to be realised.

5. Governments must be responsible and accountable for providing sustainable water strategies and a framework to provide clean drinking water, sanitation services, and food. In order for management strategies to be effectively implemented, water must be viewed as a valuable, scarce resource. To ensure delivery, water data should be shared across jurisdictions and, if appropriate, new institutions, regulatory bodies and organisations should be established.

ED_004926A_00025370-00006

1. WATER, FOOD AND POVERTY: THE CONTEXT

African heads of state joined the global consensus in agreeing to reduce by half the proportion of people "without sustainable access to safe drinking water" by 2015.[1] This is within the framework of the Millennium Development Goals 1 and 7 ("Eradicate extreme hunger and poverty" and "Ensure environmental sustainability", respectively). They further agreed, at the World Summit on Sustainable Development in Johannesburg, to reduce by half the proportion of people living without access to improved sanitation by 2015, compared to 1990 levels. The provision of water of suitable quality and in sufficient quantity forms the cornerstone for achieving these Millennium Development Goals.

In 2009, Africa's population exceeded 1 billion[2] and continues to increase at a rate of 2.4% annually. Of this population, 341 million lack access to clean drinking water,[3] and a further 589 million have no access to adequate sanitation.[4] In both cases, increases in coverage are not keeping pace with population growth, which means it will be unlikely that the 2015 Millennium Development Goals will be met.

It is estimated that around half of all patients occupying African hospital beds suffer from water-borne illnesses due to lack of access to clean water and sanitation. This is reducing the overall health and productivity of the adult workforce.[5] Water-borne diseases like typhoid, cholera and dysentery are among the major causes of mortality and morbidity in Africa. Lack of safe water and sanitation costs sub-Saharan Africa around 5% of its Gross Domestic Product (GDP) each year.[6] Households in rural Africa spend an average of 26% of their time fetching water; generally women are burdened with this task.

The number of people experiencing starvation has increased due to prolonged drought between 2007 and 2009 in many countries. In 2005, at least 280 million people were undernourished, with most of these living in Sub-Saharan Africa.[7] Demand for water to grow food has increased as a result of the increasing population and Africa has not been able to produce enough food. Over the past 50 years, cereal yields in Africa have stagnated whilst population has increased.[8] A lack of investment in irrigation infrastructure and new technologies means that Africa has some of the lowest water-to-food conversion rates in the world.

The water resources that Africa has are being degraded due to high demand and untreated waste water entering the environment from industry and domestic sources. Adaptation and planning of water resources is difficult, as many African countries have no established water quality monitoring programmes. Most of the rivers and water courses are non-gauged and the rural and peri-urban water supply is not considered to be an essential part of most water treatment systems. Water pollution statistics are limited as adequate analytical laboratories are scarce. There has been a lack of focus on water as a critical resource and therefore this sector has seen substantial under-investment. Above all, the absence of a structured framework for water governance is hindering effective water management.

ED_004926A_00025370-00007

2. PROVISION OF WATER RESOURCES IN AFRICA

2.1 Where is the water?

Africa as a continent appears to have an abundance of water; it has 17 rivers, each with catchments over 100,000 km^2, more than 160 lakes larger than 27 km^2, vast wetlands and limited, but widespread, groundwater. Rainfall similarly is plentiful, with Africa's annual average precipitation being at a level comparable to that of Europe and North America.[9] Withdrawals of water in Africa for its three main uses – agriculture, domestic, and industry – is low, estimated to be only 3.8% of total annual renewable water resources.[10]

However, Africa is a continent with large disparities in water availability between sub-regions. About 50% of Africa's total surface water is concentrated within a single basin – the Congo river basin – and 75% of total water resources are concentrated in just eight major river basins.[11] The countries with the highest available freshwater per capita include the Democratic Republic of Congo, with around 250,000 m^3 per capita per year. In contrast, Burundi and Kenya have only around 840 and 950 m^3 freshwater per capita per year, respectively.

Figure 1 shows the extreme spatial variability of rainfall across the continent, from the humid tropics to the arid Sahara. There are, of course, substantial differences in rainfall at different times of the year and, in some regions, it also varies from year to year and from one decade to the next.

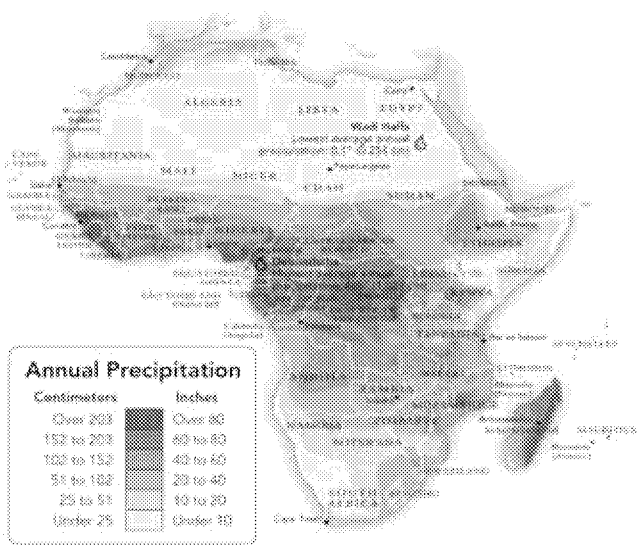

Figure 1. Map of annual rainfall across Africa[12]

Climate change is also likely to exacerbate this situation. The 4th Intergovernmental Panel on Climate Change Report states that climate change and variability have the potential to impose additional pressures on water availability in Africa.[13] It is also thought that the incidence of extreme weather events, such as droughts and floods, will further impact on the access that communities have to water. However, the vulnerability of water supply cannot be solely attributed to climate change. Other factors, such as population increase and changes in land use, can also contribute to water scarcity and the degradation of its quality.

2.2 Water stress and scarcity

The disparity in water resources across Africa means that a quarter of all people are experiencing water stress (defined as between 1000 and 1500 m^3 per capita per year).[14] With populations increasing, water scarcity (less than 1,000 m^3 per capita per year) is emerging as a major development challenge for many African countries.

Water scarcity was experienced in 10 African countries in 1995: Algeria, Burundi, Cape Verde, Djibouti, Egypt, Kenya, Libya, Malawi, Rwanda and Tunisia. Projections indicate that the situation will worsen by 2025, 14 countries will suffer water scarcity and a further 11 countries will suffer water stress.[15] In a few years, at the current rate of water demand, almost all sub-Saharan African countries will be below the level at which water supply is enough for all. Even worse, most of them will be in a state of water-stress or scarcity.

The amount of water available is a key concern in countries racing towards their physical limit of available fresh water. In other countries, the rapid population growth and the expansion of urban settlements, industry and commercialised agriculture, is adding extra pressure on water resources that are also degrading in quality.

2.3 Water quality

Water quality is impacted both by natural processes, such as seasonal trends, underlying geology and hydrology, weather and climate, and by human activities, including domestic, agriculture, industry and environmental engineering. 75% of Africa's drinking water comes from groundwater[16] and is often used with little or no purification. Water contaminated by microbiological pollutants spread diseases such as dysentery, cholera and typhoid. Chemical contaminants, including those naturally found in the underlying bed rock, can also cause disease and developmental problems, and can adversely affect agricultural yields and industrial processes. A detailed knowledge of water quality is essential so that drinking water can be adequately treated and the contamination of its sources can be prevented.

The United Nations Environment Programme (UNEP) has recently set up GEMStat database, dedicated to water

ED_004926A_00025370-00008

quality.[17] The database includes data for all regions in the world including Africa, and contains information about physico-chemical parameters (e.g. pH), nutrients, major ions (including metals), organic matter and organic contaminants, together with microbiological and hydrological data. However, the data collected for Africa is only limited to specific regions and in many cases does not give a detailed assessment of the sources of ground and surface water.

Improvement in coverage is needed in parts of the globe, particularly in Africa. Where the quality of water is being measured, a worrying picture is emerging. Many important water bodies, which provide water for drinking, washing and irrigation for many thousands of local inhabitants, are showing unacceptable levels of potentially toxic substances. These include heavy metals, persistent organic pollutants (POPs) and biological contaminants. These pollutants originate from a variety of sources, including local industries and domestic waste water. It is clear that, without increased monitoring, it will be difficult to protect water quality and implement preventative policies and practices.

2.4 Drinking water and sanitation

Access to clean drinking water and basic sanitation, including toilets, waste water treatment and recycling, affects a country's developmental progress in terms of human health, education and gender equality. The provision of sustainable drinking water and sanitation are inadequate across many parts of Africa and, where available, water supply and sanitation services are differentiated according to urban, rural or informal settlements.

Provision of potable water varies amongst urban, rural and peri-urban dwellers. The middle- and upper-class urban dwellers receive water from major rivers, dams and deep well sources. Most of Africa's rural and peri-urban water-needy depend on smaller tributaries and catchments and seasonal rivers. They also have access to shallow bore holes and rain water catchment. Most of the ground water resources have not been quantified, nor studied to assess the withdrawal and recharge rates, and in fact, when properly utilized, Africa's aquifers may provide enough water for the growing population as long as the water withdrawal and recharge rates are stabilized.

Not surprisingly, African towns and cities have better water supplies and sanitation services than rural areas, yet two-thirds of the African population live in the countryside. An estimated 82% of urban residents in Sub-Saharan Africa have access to safe water and 55% to sanitation facilities. Developed water supply and sanitation services in the urban areas are concentrated in the upper and middle class areas. The urban poor have the least access to these services and pay the highest price for their water. Further differentiation is made between urban centres with declining water distribution systems, due to inadequate, aging and overloaded networks and the situation of peri-urban dwellers.

The lack of an adequate water supply at home or in its immediate vicinity is a particular problem for women and girls, who are often responsible for fetching water, often from sources which are a long way from home. In rural regions of Africa, they spend, on average, three hours a day engaged in the collection of water for a family of six. This restricts their opportunities for education, to say nothing of the physical burden to which they are thereby exposed.

IN SUMMARY

- Africa has plentiful water resources but these are unevenly distributed across the continent; rainfall can also vary substantially from one year to the next. Climate change is likely to increase this variability still further, and will make it harder to provide a reliable supply of water.
- The available data suggests that water quality is declining, but there is a pressing need for more data to be collected.

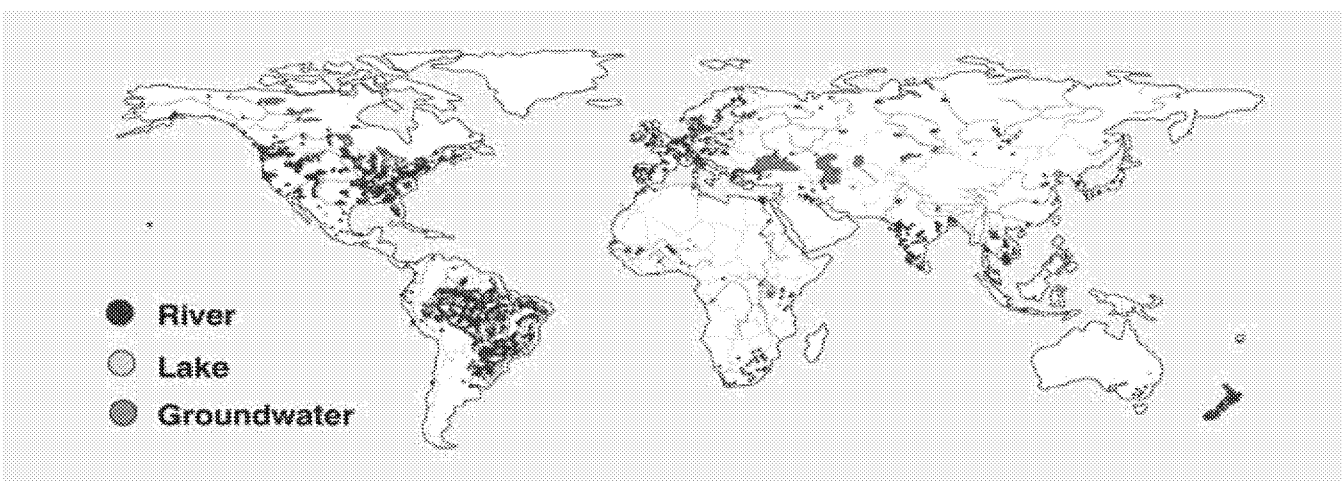

Figure 2. UNEP GEMS/ Water global Network worldwide distribution of over 2,800 monitoring stations

ED_004926A_00025370-00009

3. WATER AND FOOD PRODUCTION

Food production comprises a large proportion of Africa's economy, bringing in, on average, 20% of the GDP for each country. In sub-Saharan Africa, it accounts for 67% of jobs.[18] Africa has the highest rate of rural poverty in the world, and the poorest remain in agriculture, with women taking the leading role in agricultural activities. Improving and sustaining agriculture in Africa will therefore be fundamental to economic development and the alleviation of poverty.

In its Global Environmental Outlook 4, the UNEP said that, 'to meet the Millennium Development Goals on hunger, a doubling of global food production will be required by 2050'. Sub-Saharan Africa in particular is currently a net-importer of grain but, with Africa's population expected to at least double to 2 billion by 2050,[19] it is essential that food production increases, ideally to the point where the region evolves to become a net-exporter of food.

Crop-yields in sub-Saharan Africa are particularly low, with the result that food production has not kept pace with increases in the population. Cereal yields, for example, have not increased over the last 50 years, whereas yields in developed countries have more than doubled in the same period of time. Calls have been made for a 'Green Revolution in Africa' to address low use of inputs and the use of improved crop varieties and to put in place the robust institutional frameworks required to support change. The call is even more urgent given recent evidence that climate change is likely to make a heavy impact on agricultural production and food security in many African countries.[20]

It is essential that food production increases dramatically over coming decades, yet in doing so it cannot consume more water in regions already stressed, nor can it risk compromising water quality. Taking Africa as a whole, agriculture accounts for 70% of water withdrawal but in sub-Saharan Africa this figure is higher, approaching 90%.[21] With water scarcity facing several African countries, and the demand of rapidly growing urban areas increasing the pressure on water supplies, a green revolution will be an enormous challenge. But it is a challenge that Africa can meet by taking a holistic view of food and water systems and by innovation through science and technology.

3.1 An integrated picture of water and food systems

Water flowing through African landscapes provides a range of supportive services, from water for direct consumption and sanitation, through to water that supports food production and maintains environmental function. Water benefits are integrated throughout the landscape, and hence parallel approaches are required to manage them so that the environment benefits all.

Agricultural intensification, if mismanaged, can cause environmental problems relating to reduced biodiversity, over-exploitation of water resources, and agrochemical pollution, including the misuse of pesticides. However, the increase in agricultural activity required in Africa can be made sustainable if modern practices are adapted for local conditions, and are coupled to good training and stewardship.

Firstly, the objectives of food security and environmental security must be integrated, and the relationship between many Africans – particularly the poorest – and the lands on which they rely for their livelihoods must be recognised. The co-development of food and water systems will need institutions that cross normal sector boundaries. New policies on water that also include food are needed, and any food policies must recognise the reliance of food production on water. Poverty alleviation programs need to recognise that changes in agriculture needs will subsequently affect the environment. It will be essential to coordinate the activities of institutions concerned with water, food and the alleviation of poverty with all those who use water.

The land and environment should be looked on as a provider of services to its inhabitants. A review of the status of any agricultural land will be needed (including for example the ecology, water availability and potential to produce food); then plans must be developed at different scales, from national and river basin/catchment levels down to individual fields, on how best to provide the desired outcomes. Recognition and payment to farmers or land owners for environmental services can help protect watershed and forestry environments, which in turn provide clean drinking water, stable water flows to irrigation systems, carbon sequestration, and protection of biodiversity. Compensation of this type, however, will rely on appropriate subsidy policies and measurement of the services supplied (see Chapter 4 - Measuring Environmental Health).

3.2 Increasing water efficiency

Access to water is a major determinant of land productivity and the stability of crop yields. Increasing productivity from rain-fed agricultural land should initially be a priority, as existing knowledge and technologies can be applied to aid areas where crop yields are still below average.

Approaches that require minimal external inputs, by exploiting biological and ecological processes, include: conservation tillage, green manure cover crops, and the

ED_004926A_00025370-00010

introduction of crop varieties that are more tolerant of pests, diseases and drought. Since the introduction of cover crops, no-till acreage has increased by nearly 40%. This approach reduces the demand for energy and water by reducing evaporation of moisture from the soil, raising its carbon content and improving its structure, increasing earthworm populations and combating wind and water erosion. However, lack of information on agro-ecology and the high demand for management skills are major barriers to the adoption of sustainable agricultural techniques in Africa.

Where appropriate, an increase in the area of irrigated land is also desirable, as irrigated land productivity can be more than double that of rain-fed land.[22] In sub-Saharan Africa, only 4% of the area in production is under irrigation, compared with 39% in South Asia and 60% in India. With climate change leading to rising uncertainties in rain-fed agriculture, investment in water storage infrastructure and irrigation systems could ensure crop yields should rainfall become more erratic.

The introduction of improved crop varieties generated through conventional breeding or genetic modification could also help to boost yields and improve the quality of many foodstuffs, as it has in other parts of the world. The higher crop yields obtained through genetic modification are believed to have saved millions of square miles of wildlife habitat from conversion to agricultural use. In the past, most biotechnology research occurring outside Africa was driven by commercial interest, which was of little benefit to small or poor consumers and did not suit Africa's wide ranging ecosystems. This is beginning to change, with work being carried out, for example, on cowpea[23] and maize,[24] plus a number of other varieties of crop that are nutritionally important to African communities.

3.3 Water quality and agrochemicals

While low-input farming systems have valuable resilience in the face of climatic or economic uncertainty, it is clear that, to an extent, use of agrochemical inputs to cropping systems must increase to achieve the levels of water productivity necessary to meet the twin goals of food and water security. Since their introduction, crop protection products have played a significant role in increasing yields; without them there would be approximately 40% loss in agricultural productivity.[25]

In the context of agriculture, the most significant water pollutants are excess nitrogen- and phosphorus-containing compounds discharged via effluent from livestock production, fertilizers and agrochemicals incorrectly disposed of, and eroded soil. All these potential contaminants should be managed carefully to minimize their movement into water. Growers should be encouraged to use Integrated Pest Management (IPM) programs recommended for their crops and local areas, and when using any product the label should be read and closely followed to minimize any residues escaping from the field and entering the local watershed.

RECOMMENDATIONS

- A strong focus on developing and improving technologies to conserve and reuse water for agriculture is required; including optimising water use, treatment of contaminated water, recycling water, desalinating water and harvesting water for irrigation.
- Modern biotechnology should be used to develop crops that are resistant to attack by pests and to environmental stresses, including drought and salinity. Nutritionally enhanced crops also hold tremendous potential to provide significant benefits for human and livestock nutrition, health, welfare, and growth.
- Higher yields from crops should be sought through enhanced responsiveness to fertilisers and pesticides.
- Farmer education in the use and storage of plant protection products should be continued.
- The impact of agriculture on the entire cycle of water use and water governance should be recognised. Water in agriculture is both a source of water pollution (return flows, groundwater contamination and surface water eutrophication and salinization) and is impacted by poor quality water – especially in the use of untreated wastewater in vegetable production and in the impact on farmers' health through exposure to water-borne pathogens.

ED_004926A_00025370-00011

4. WATER QUALITY: MONITORING ENVIRONMENTAL HEALTH

Environmental monitoring is essential if we are to identify sources of contaminants and build strategies to avoid these entering water resources that may be used for human consumption. Good environmental monitoring, operating within a robust legislative framework, is an essential prerequisite to achieve this. The first step is an assessment of the present status of the aquatic environment. Effort can then be focused on the restoration and protection of environmental health.

In order to build the capacity to protect environmental health, investment needs to be made in suitable hardware (technology that is fit for purpose including low technology options). However, the training of suitable personnel, together with the development of systems for data validation and quality assurance, are equally important. This requires people to operate and maintain the instrumentation and others to interpret the data, formulate policy and implement strategy. This is achievable through the identification and support of 'Centres of Excellence' within the region in question.

In determining a strategy for the protection of environmental health of the African continent, it is essential to involve and engage the communities who will benefit most from the rewards of a healthy environment. The equipment will need to be robust, low-cost and easy to maintain. The use of local or indigenous knowledge, where appropriate, will increase the probability of acceptance and success in the drive for the protection of the health of both humans and ecosystem in Africa.

4.1 Environmental monitoring networks

The establishment or improvement of monitoring networks should:

- ascertain where water quality and quantity is a problem;
- identify when remedial action is required;
- allow for short and long term planning and actions to take place.

Fit For Purpose Rapid Analytical Techniques: The Requirements

Analytical sampling is expensive and time consuming and sample integrity may be lost even before it reaches a laboratory. Monitoring needs to occur *in situ*, so that high quality data with excellent resolution can be collected for process studies and mapping. For this we require:

- robust, portable, automated instrumentation;
- contamination-free environment (includes reagents, containers, sampling apparatus, transportation);
- sensitive and selective detection;
- removal of matrix interferences e.g. sea salts;
- system stability (reagents, standards, pumps, detector);
- on-board filtration and prevention of bio-fouling;
- remote calibration, validation and maintenance.

4.2 Increasing analytical capacity in Africa

The increasing growth in the African population, combined with a lack of stringent environmental safeguards, has given rise to serious concern about water quality, and the associated threats to human health and the environment. If Africa and its research scientists are to embrace the recommendations of this report, increasing Africa's capabilities and capacity in analytical chemistry is imperative. In order to support chemical monitoring and management activities such as those discussed here, there is an urgent need for more personnel who are scientifically qualified and technically trained in relevant advanced analytical techniques. These include, for example, modern capillary gas chromatography (GC) methods incorporating detection either by electron capture (EC) or mass spectrometry (MS). Thus, it is essential to create and support centres of excellence in analytical chemistry, with a critical mass of experts, in African universities.

The status of instrumentation in African Higher Education institutions is a grave problem which urgently requires addressing. Governments need to provide funds to enable universities to access and maintain the required equipment, and also to facilitate continued

ED_004926A_00025370-00012

training of researchers. Optimisation of resources is crucial if funds are to be used wisely, and national and regional centres of excellence, with shared research facilities, should be established as part of this effort.

Underlying issues related to equipment donated to Africa should be considered, including:

1. Procurement: clearance problems at the port of entry with consequent costs and delays;
2. Installation: engineers' expenses difficult to source;
3. Maintenance and repairs: lack of trained personnel, engineers' expenses;
4. Experimental hardware: lack of specialized instrumentation (e.g. GC/MS) in African universities, as well as a shortage of trained personnel able to use and maintain such equipment;
5. Decommissioning: lack of knowledge of procedures involved.

The Pan Africa Chemistry Network coordinates and supports activities aimed at building capability and capacity in this area. Examples are the commissioning and installation of gas chromatography-mass spectrometry instrumentation at Jomo Kenyatta University of Agriculture and Technology, Kenya, and more recently at Addis Ababa University, Ethiopia, and the provision of analytical training courses for researchers across Africa. The ultimate aim is to develop well-equipped chemical research communities by supporting regional centres of excellence. It is important that these centres are supported, promoted and continuously funded.

RECOMMENDATIONS

- Increase networking and capacity-building activities in analytical chemistry by providing, transporting and commissioning equipment in good condition to African research centres.
- Develop centres of excellence in experimental techniques (at least one per country or region). These, operating under the auspices of PACN for instance, could run training courses to facilitate instrument usage by other universities in the region.
- Strengthen the already successful 'centre of excellence' at Jomo Kenyatta University of Agriculture and Technology and develop shared facilities at new regional centres of excellence in other countries.
- Governments and universities should examine possible funding schemes that could be viable in Africa to facilitate creation of centres of excellence in the chemical sciences.
- Facilitate networking activities of African and non-African scientists in the area of water research and management.
- Networking among African scientists both within and outside Africa is vital if African R&D is to be engaged in the international arena: the PACN should be seen as an example of this.

ED_004926A_00025370-00013

5. TECHNOLOGIES TO PROTECT AND IMPROVE WATER QUALITY

Water quality is defined by its chemical, physical, and biological characteristics and needs to be considered in the context of whether it is *fit for purpose*. This will depend on its intended use. Key processes that impact on water quality include:

- Eutrophication, i.e. elevated nutrient concentrations leading to excessive algal growth and deoxygenation due to diffuse run-off from agricultural land and point source discharges from wastewater treatment plants;
- Diffuse and point source discharges/drainage from mining activities;
- Localised discharges of organic micropollutants and metals from specific industries and domestic wastewater;
- Saline intrusion into groundwater in coastal areas;
- Erosion and sedimentation from, for example, deforestation, rainfall events (which are temporally and spatially highly variable) and engineering projects.

5.1 Clean drinking water

Methods to produce clean drinking water differ across the globe but, in general, involve the removal of suspended solids and bulk organics by coagulation, sedimentation and filtration, followed by chemical disinfection where necessary.

Many rural communities in Africa use ground-, surface- or rain-water for drinking. Many cannot afford the expensive chemicals required to disinfect water, so they have to take it as it is, or simply leave it to settle to remove sediments. It is therefore essential to provide low-cost methods for testing water quality.

Problems associated with drinking untreated water include:

- contamination of surface water by bio-organisms;
- contamination of groundwater by fluoride, arsenic, nitrate, iron and of more recently, chromium from natural geological sources or agricultural and industrial activities;
- excess salinity due to sea water infiltration.

For communities connected to a water supply network, it is the responsibility of the service provider to produce water that is suitable for drinking when it reaches the consumer; it is essential that governments set up monitoring systems to ensure this is the case. However,

Case Study 1 – EPA Compact Water Plants utilised in Africa for small and remote communities

EPA (Estación Potabilizadora de Agua) Compact Water Plants use a conventional treatment system (coagulation, flocculation, sedimentation, rapid filtration and disinfection process) with no need of pumps; instead they use hydraulic flocculation, a settling tank and rapid sand filters. Erection of the plant, training and the necessary intake and distribution works are standardized, achieving a whole product solution. Operation of the plant requires only a low energy input (*e.g.* 4 hp - EPA 20, delivering 20 m^3/hr), when compared with other conventional solutions or more sophisticated technologies. In addition, operation of the plant is straightforward and can be carried out by one person. Local personnel can easily be trained to operate the plant and take charge of its maintenance.

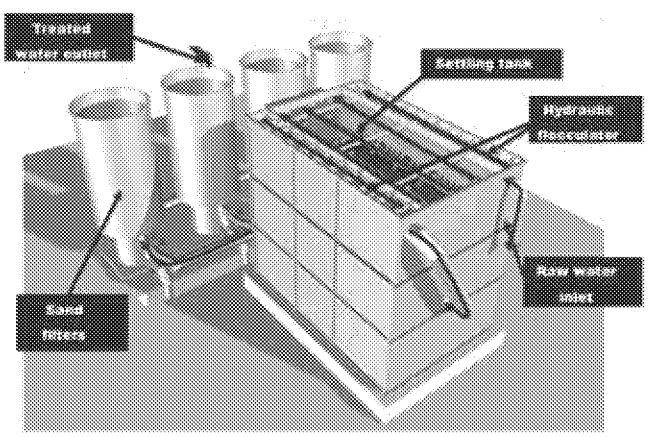

EPA General Technical Specifications
(Dimensions: 4 m length, 2 m width, 3.5 m height)

In the case of four communities served by EPA Compact Water Plants, it was noted that they developed a feeling of "ownership". They agreed to charge a fixed sum of money per litre of treated water, assuring the funding for proper operation of the plant. Anticipating the needs of remote communities without access to an electricity supply or other fuel source, a new model of the Compact Water Plant has recently been introduced. This new model includes a solar panel which covers all the energy requirements (1 hp), while delivering half the flow rate of the original model (10 m^3/hr). Erection of this model is also easier, reducing the overall cost of the plant, and allowing communities to recover their costs more quickly.

P. Mastrangelo, *CSI Ingenieros, Montevideo, Uruguay.*
pmastrangelo@csi.com.uy

ED_004926A_00025370-00014

for many smaller, poor or rural African communities, no drinking water supply network is available. In these cases, technologies that produce water suitable for drinking need to be cheap, easy to use, robust and suitable for maintenance by the local population. They should produce water that is free from suspended particles and, most importantly, microbial contaminants, without the need for monitoring water quality output.

5.1.1 Point of entry treatment

Point of entry treatment refers to water treatment carried out at the source of distribution. It is economical, convenient and suitable for urban or small rural communities where the costs of water supply can be shared (see Case Study 1). This type of project has shown itself to be successful when water is seen as a valued commodity by the local population.

5.1.2 Point of use treatment

Point of use treatment refers to water treatment at the user end of supply; point of use devices have to be operated and maintained by the individual. Quality of supply is assured subject to the device operating properly and an adequate supply of water obtained, but the per capita capital expenditure may be greater compared with community treatment plants. Point of use devices should be simple and wherever possible should be suitable for household operation, with minimum chemical or physical intervention. The device should also be less dependent on external energy sources. Examples of point of use water purification methods and devices include: mechanical filtration, disinfection with natural plant extracts (see Case Study 2), and solar disinfection.[26] Devices for the specific removal of fluorides (see Case Study 3) and arsenic have been designed for areas contaminated by these naturally-occurring chemicals.[27]

5.2 Waste water treatment

The principle function of wastewater treatment is to remove solid, organic and microbiological components that cause unacceptable levels of pollution to the receiving water body. Depending on the source of waste, consideration also needs to be given to ammonia, nitrate, phosphorus, microorganisms, specific organic pollutants and metals.

The processes most commonly encountered in wastewater treatment include: (1) screens, (2) coarse solids reduction, (3) grit removal, (4) sedimentation,

Case Study 2: Water purification using natural plant coagulants (*Moringa oleifera* seeds and *Maerua decumbens* root)

Sources of water in the water-scarce areas of the Kitui and Mwingi districts of Kenya include seasonal rivers, shallow dug wells on dry river beds, sand dams and wells, and open pans. These water sources have been reported to be turbid and contaminated with micro-organisms, especially during the rainy season.

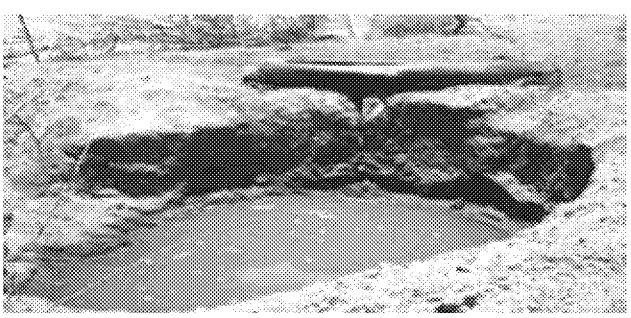

Shallow dug well on a river bed

The indigenous people of the Kitui district improve the quality of water available to them by using powdered *Moringa oleifera* seed and ground *Maerua decumbens* root to clarify the turbid water. In order to test this method of water purification, seeds of *M. oleifera* and root of *M. decumbens* were washed, oven-dried and then ground and stored in sterile, air-tight glass jars. Turbidity and microbiological analysis were then carried out on test water, before and after treatment with the plant coagulants.

The root of *M. decumbens* reduced the turbidity of slightly turbid water by 95% and highly turbid water by 50% but was found to impart colour to the water. The seeds of *M. oleifera* reduced the turbidity of slightly turbid water by 98%, and of highly turbid water by 77% and impacted no colour and odour on the water. In addition, the root of *M. decumbens* and seeds of *M. oleifera* reduced the pathogenic microbial count by 99% and 100%, respectively.

In conclusion, both *M. oleifera* seed and *M. decumbens* taproot extracts have been shown to clarify and disinfect water; however, the former is superior. As such, communities living in arid areas should be encouraged to grow the plant *M. oleifera* both for food and to use the seeds for water purification.

A. Gachanja, *Department of Chemistry, Jomo Kenyatta University of Agriculture and Technology, Nairobi, Kenya*

ED_004926A_00025370-00015

(5) biological treatment and (6) filtration. The majority of the processes work through the application of a physical force and are collectively known as physical processes.

There is a vibrant field of research developing within the African scientific community investigating emerging water treatment technologies that utilise locally available biomaterials and resources. Promising bioresource candidates, including examples presented at the PACN Sustainable Water conference, include:

- Seeds of the *Moringa olefeira* tree, and roots from the *Maerua documbens*, can be used as flocculating agents (see Case Study 2).
- *African water hyacinth*: recent comparisons of the maximum sorption capacity of several untreated biomaterial based residues showed that African water hyacinth (*Eichhornia crassipes*) is a suitable candidate for use as biosorbent in the removal of heavy metal ions from aqueous solutions in water distribution systems in Kenya and Ethiopia.[28]
- *Activated carbon from agricultural waste*: water treatment using activated carbon made from locally grown agricultural waste (maize, cobs, bagasse, coconut shells, macadamia nut shells, coffee husks, sawdust) is an emerging field of sustainable remediation under examination in Kenya.[29]
- *Fishbone adsorption*: the adsorption of Pb from Nairobi river using multi-layer fishbone beds is emerging as a useful candidate for future development by the University of Nairobi, Kenya.[30]
- *Plant bio-accumulation: Zea mays* (maize), *Commelina bengelensis* (tropical spiderwort), *Helianthus annuus* (sunflower) and *Amaranthus hybridus* (amaranthus) have been the subject of much study for their ability to bioaccumulate the metals Pb, Cu, Cd and Zn and have promising potential for removal metals from wastewater.[31 32 33]
- *Lignocellulose/clay nano-composites*: the University of Fort Hare in South Africa is taking a leading role in the development of PMMA-grafted lignocellulose/clay nano-composites for the removal of heavy metals and chlorinated organics from water.[34]
- *Raw bauxite*: the removal of fluoride contamination from ground water using raw bauxite is being examined by a group from Botswana, with promising early results.[35]

Case Study 3 – Development of a household water de-fluoridation process for developing countries

High levels of fluoride in groundwater has been reported parts of in Ethiopia, Malawi, Kenya and Tanzania and can lead to health problems including dental fluorosis, osteosclerosis, thyroid problems, growth retardation and even kidney failure. Most of the methods currently available for the removal of fluoride from drinking water are either too expensive, are technically unfeasible for household use or change the water quality. In this study, the removal of fluoride from water using aluminium hydroxide has been investigated and a household defluoridation unit (HDU) has been designed and tested.

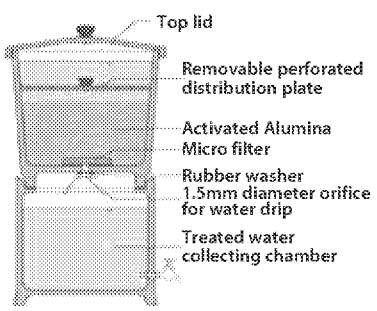

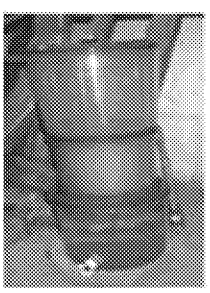

The surface area and pore volume of the prepared adsorbent were 110 m^2/g and 0.29 cm^3/g, respectively.

A series of batch adsorption tests were carried out to evaluate the effects of operational parameters such as contact time, adsorbent dose, thermal treatment of adsorbent, initial fluoride concentration, pH and other ions which commonly exist in groundwater. Results showed that fluoride removal efficiency exceeding 90% was achieved within 1 hour contact time at an optimum adsorbent dose of 1.6 g/L, treating water containing an initial fluoride concentration of 20 mg/L.

A HDU packed with 0.9 kg of adsorbent with 28.3 cm bed depth resulted in a specific safe water yield of 823.79 L under the optimum operating conditions used in this study. Regeneration of the exhausted media using 1% NaOH and 0.1 M HCl showed that the adsorbent could be reused. The estimated running cost of the unit was 28 USD/m^3 of treated water, which can be minimized further. Hence, it is concluded that this proposed method is simple and has superior performance for the treatment of fluoride-contaminated water with potential application in both household and community water treatment systems.

Z. Feleke, E. Mulugeta, A. Alemu and B. S. Chandravanshi, *Department of Chemistry, Faculty of Science, Addis Ababa University, Ethiopia*

ED_004926A_00025370-00016

Other processes operate through a biological reaction, coupled to an adsorption step. In these cases, microorganisms utilise water components as part of their growth cycle, converting dissolved organic components into solids for removal in downstream physical processes.

For communities serviced with a sewerage system, it is the responsibility of the service provider to clean the water to a standard where it can be discharged back into the environment. This water is returned to the water table or receiving body, such as a river or a lake. In these instances, it is essential that governments, or the appropriate regulatory bodies, monitor the effluent discharged. In rural communities that are not connected to sewerage systems, the most common latrine is a pit latrine, which should be kept well away from local drinking water supplies.

Rural communities can have domestic waste water (from cooking, washing and laundry), which could be a valuable resource for irrigation if some basic filtration is undertaken (see Case Study 4). Methods to recycle domestic waste water must be cheap, easy to maintain and capable of removing potential sources of environmental pollution through the removal of salts and fats commonly found in detergents.

RECOMMENDATIONS

- Water supply and sanitation services need to be tailored to meet the needs of the local population. In general, technologies that are developed for use by local populations need to provide water that is fit for purpose, are cheap and easy to use and require low maintenance.

Case Study 4 – Ecological Greywater Treatment Systems

Greywater is the term used to define domestic wastewater, which comes from a variety of sources including the shower/bath, laundry and kitchen. The composition is usually variable and includes suspended solids, greases and fats, pathogens and chemicals derived from soaps and detergents. Common disposal practices in Africa include reuse for garden irrigation, or simple disposal into storm water servitudes or the surrounding environment. In the long term, these practices are unsustainable and cause pollution for the environment, which is usually directly inhabited. Therefore, there is an urgent need for low cost, small scale, household level greywater treatment systems.

One potential system is the ecological greywater treatment system.

This simple and cheap system treats effluent to meet South African effluent standards and produces water suitable either for irrigation or for release to the environment.

P. Naickeri, *School of Biological and Conservation Sciences, Pollution Research Group, University of KwaZulu-Natal, Durban, South Africa*

Mulch tower (primary treatment)

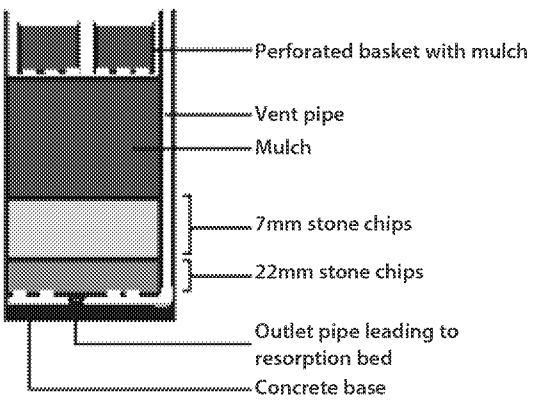

Sub-surface resorption bed with infiltration zone (secondary treatment)

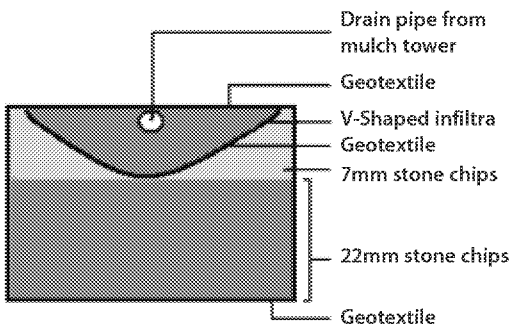

ED_004926A_00025370-00017

6. BUILDING SCIENTIFIC AND HUMAN CAPACITY

For Africa to achieve its potential it should invest in human capital and reduce its dependence on increasingly vulnerable natural resources. It should develop a common vision with science, technology and innovation indicators for the continent and integrate these into decision making and policy spheres and increase substantially the investment in Africa from influential bodies.

It is essential that scientific networks are created with common agendas and investment is made in infrastructure. These networks will help to focus higher education and research and will create a culture of science. However, Africa should not emulate existing foreign models but invent ones that will work in Africa and foster research that goes beyond research ***about*** Africa to research ***for*** Africa and ***by*** Africans.

6.1 A vision of scientific excellence in Africa

The structure of scientific research is changing with the rise of the new 'invisible college' and with a shift from 'international' to 'global' science.[36] Researchers are able to join a specific community, regardless of where they are in the world, driven purely by the desire to do original and creative research. Therefore, science policy makers should change their thinking as research migrates away from the national science models of the 20th century towards a global system.

Global science is a network that greatly enhances the value of individual researchers or research groups, as scientists form links with each other in order to benefit from the resources and knowledge of others. It is a balance between perceived risks (such as sharing ideas and unpublished data), against perceived benefits (such as receiving new ideas that can take research into unexpected outcomes) ultimately resulting in the publication of new data. The most important initiators of these networks are leaders in certain research fields, and these subject-specific networks present an important opportunity for researchers in the developing world. Identifying priority areas in which researchers can develop their own unique and impactful research will give them a bargaining tool, enabling entry to these networks and the benefits of global collaboration. Water research is an example of such a priority area for African researchers.

> *"A newcomer to the research arena cannot hope to rival the United States or Europe in high-cost discipline…, but by focusing on a unique resource or a uniquely compelling problem, …may be able to build a new hub within the new invisible college"*
>
> **Caroline Wagner** in "The New Invisible College: Science for Development"[36]

Learned societies and networks such as the Pan Africa Chemistry Network (PACN) already help foster these global collaborations. By providing access to societies such as the Royal Society of Chemistry (RSC), a world-wide network of scientists, including African scientists, is being created. Equally, financial support by the RSC, Syngenta and PACN enables collaborations, fosters local learned societies, provides fellowships, supports attendance at conferences and workshops and helps to sustain HE research.

Strategies to develop the science base should encourage the development of a mixed system that allows investment in infrastructure, formal education and research training, while at the same time facilitating and fostering networking between African scientists and the rest of the world.

6.2 Increasing scientific dialogue with governments

African scientists have the knowledge and potential to help formulate and implement sustainable water strategies. It is essential that their voices are heard within government, by entering into dialogue with relevant policy makers. However, for change to occur, the appropriate institutions must of course exist and be willing and able to implement the required regulatory change.

RECOMMENDATIONS

- Learned societies such as the RSC have a key role to play in forging scientific links between the developed and the developing world, thus their efforts should continue and increase.
- Engagement with governments and policy makers is essential in order to increase awareness of the role of science and technology in social and economic development and to create an innovative culture in African universities. The latter includes the need for (i) African researchers to work more closely with industry and (ii) both international and African companies to support research and development at African universities.
- Scientists should become role models in Africa, communicating with the non-scientific public about the role of science in society, raising the profile of science and attracting into the scientific domain the brightest and best of the next generation.

ED_004926A_00025370-00018

7. BUILDING A SUSTAINABLE WATER SECURITY SYSTEM

Water is needed for domestic use, in businesses and industry, and for agriculture, and it is also key to ensuring a healthy and diverse natural environment. Too much water is a threat to national security and property, and too little water affects a country's prosperity, and can be a threat to the health of its citizens and to its natural environment. The value of water to all users varies throughout the year and is generally at a premium when it is least available due to competing demands. The true value and benefit of water cannot be realised unless all its key uses are managed in a holistic way.

7.1 A national water strategy

All governments must have a national water strategy that captures the value of water as an economic good, alongside the policies to deliver it. The strategy must first deliver the correct quantity of water (linked to catchment protection) and identify any new infrastructure that may be required, and then address the supply of water for food, health, drinking water and sanitation. The strategy must provide a long term framework that enables all sectors of the economy to contribute to the provision of water and sanitation services.

The direct and indirect contributions of water and sanitation to GDP must be clearly identified and communicated to government departments responsible for economy, health, agriculture, environment and security. Their respective roles and contributions must be clear with all relevant instruments put in place for delivery. Institutional barriers must be identified and steps taken to remove them. Where necessary, new institutions, regulatory bodies and organisations must be established as part of the institutional framework to ensure the correct strategy is delivered.

In addition, the true value of water must be communicated to the local population so as to get buy-in and support for any new infrastructure. Charges to customers must also reflect the value of the service they are being provided with. However, it is essential that a distinction is made between rural, urban and peri-urban policy initiatives and that support is available for poorer communities.

A sustainable water strategy should include:

- a long term economic framework for water and agriculture;
- a review of existing institutions to ensure changes are enforced and delivered, and the establishment of new ones where necessary;
- paying for the services, tariffs, government subsidies and taxes;
- water resources and demand management;
- water quality management;
- flood management and security;
- water and sanitation services (ownership and service delivery);
- addressing how water contributes to economic development;
- proposals for improving health;
- recognition of construction and operation of water infrastructure to the economy;
- education and social change;
- plans for capacity building for all players;
- policies for emancipation particularly for women and children for self-development;
- communication.

7.2 Water institutions

National water institutions are needed to deliver national water strategies. They must include parliament, cross-government departments, regulators (such as economic, environment, drinking water), rural water and community schemes, regional planning and development, NGOs, stakeholder groups, centres of water research, and government water policy including think-tanks and consumers. For rural water supply it is critical that local institutions are set up and empowered to operate at community levels, whilst being coordinated nationally.

Issues to consider include:

1. That water institutions tend to focus on either water, or agriculture, or development. They do not tend to cross sectors. It is important that activities put in place in one sector are monitored to avoid inadvertent effects on another sector.

2. Water institutions occur at community, national and trans-national scales, but they are not linked. Linkage must occur at two scales or more to be sustainable.

3. Water institutions are generally lacking instruments of change: policy, enforced law. Innovative solutions are required to support change.

At both the national and international level, the lack of institutions is the greatest obstacle to development.

ED_004926A_00025370-00019

Institution building must therefore form the basis for any change process. It is clear that existing structures cannot meet demand yet it is also clear that in many parts of Africa, many institutions exist at community and local levels that could support the national and international effort.

7.3 Cross-border water institutions

Many of Africa's water resources and catchment areas are trans-boundary, and in some cases more than one country can rely on a single resource such as the Nile. It is therefore essential that any national water strategy takes into account the requirement for international coordination. African cooperation on water issues already occurs through intergovernmental river and lake basin organizations, and includes agreements between countries where resources are shared. Some of these organizations harness water for irrigation, energy production, and water supplies for communities and mining operations, and in their early years they drew up ambitious plans for developing natural resources, including shared water resources. However, most organizations have encountered serious problems including: a lack of strong and sustained political commitment from member states, overly ambitious programmes, a lack of focus on priority areas, and political and social instability. Revitalizing Africa's river basin organizations is an urgent priority, requiring political and financial support.

7.4 Policy owners and leadership

Every government must make its sustainable national water strategy an economic, health and social priority. Central government must take overall ownership of the policy and strategy, and must take responsibility for its delivery and coordination at regional and local levels, including within rural communities. National cross-border agreement and coordination must also be addressed. Examples of good practices are already available in a number of countries in Africa, Europe and Asia to use as models.

RECOMMENDATIONS

- Every country must have a national water strategy and develop the policies to deliver it. The strategy must first deliver the correct quantity of water (linked to catchment protection) and must then also address the essential elements of water for food, health, drinking and sanitation.
- It is essential that all relevant national and international institutions necessary for delivery of the strategy and policies are established.
- The economic impact of water and sanitation services must be communicated, with particular emphasis on their contribution to GDP, in order to drive change.
- The true value of water must be communicated to ensure the buy-in and support from society.

ED_004926A_00025370-00020

8. REFERENCES

1 *Millennium Development Goal 7c: Reduce by half the proportion of people without sustainable access to safe drinking water and basic sanitation*, United Nations Development Programme

2 *State of World Population 2009*, United Nations Population Fund, 2009

3 *A Snapshot of Drinking Water and Sanitation in Africa*, WHO/UNICEF Joint Monitoring Programme for Water Supply and Sanitation, 2008

4 *A Snapshot of Sanitation in Africa*, WHO/UNICEF Joint Monitoring Programme for Water Supply and Sanitation, 2008

5 *Factsheet on Water and Sanitation*, UN-Water, 2008

6 United Nations Development Programme, 2007

7 *The State of Food Insecurity in the World*, FAO, 2008

8 *Agriculture's performance, diversity and uncertainties*, World Development Report, 2008

9 *The Africa Water Vision for 2025: Equitable and Sustainable use of water for socioeconomic development*, UN Water/Africa

10 *The Africa Water Vision for 2025: Equitable and Sustainable use of water for socioeconomic development*, UN Water/Africa, pg 8

11 *Freshwater trends and projections: focus on Africa*, WWF International 2005

12 http://maps.howstuffworks.com/africa-annual-precipitation-map.htm

13 *Climate Change 2007: Impacts, Adaptation and Vulnerability*, IPCC 4th Assessment report, Chapter 9: Africa, 2007

14 *Climate Change 2007: Impacts, Adaptation and Vulnerability*, IPCC 4th Assessment report, Chapter 9: Africa, pg 435, 2007

15 *The Africa Water Vision for 2025: Equitable and Sustainable use of water for socioeconomic development*, UN Water/Africa, pg 11

16 *The Africa Water Vision for 2025: Equitable and Sustainable use of water for socioeconomic development*, UN Water/Africa, pg 8

17 http://www.gemswater.org/

18 *Mapping food, poverty and agriculture in Sub-Saharan Africa*, FAO, 2007

19 *World Population Prospects*, UN Department of Economic and Social Affairs 2001

20 *Climate Change 2007: Impacts, Adaptation and Vulnerability*, IPCC 4th Assessment report, Chapter 9: Africa, pg 435, 2007

21 *Climate change, water and food security*, Food and Agriculture Organisation of the United Nations, 2008

22 *Overview*, World Development Report 2008: Agriculture for Development

23 http://www.monsanto.com/responsibility/our_pledge/stronger_society/partners.asp

24 http://www.syngentafoundation.org/index.cfm?pageID=172

25 Oerke E-C. Crop Losses to Pests; Journal of Agricultural Science (2006), 144, 31-43

26 *Solar disinfection of drinking water (SODIS): an investigation of the effect of UV-A dose on inactivation efficiency*, Eunice Ubomba-Jaswa, Christian Navntoft, M. Inmaculada Polo-López, Pilar Fernandez-Ibáñez and Kevin G. McGuigan, Journal of Photochemical and Photobiological Sciences, 2009

27 Feleke Z, Mulugeta E, Alemu A, Chandravanshi BS. Department of Chemistry, Faculty of Science, Addis Ababa University, Ethiopia. "*Development of a household water de-fluoridation process for developing countries*". Oral presentation at PACN, Sustainable Water Conference 26th – 28th August 2009, University of Nairobi, Nairobi, September 2009

28 Onindo CO, Muthakia GK, Murithi G., "*The Water Hyacinth* Eichhornia Crassipies *as a Biosorbent for Lead (II) Removal: Kinetic and Equilibrium Studies*." Oral presentation at PACN, Sustainable Water Conference 26th – 28th August 2009, University of Nairobi, Nairobi, September 2009

ED_004926A_00025370-00021

29 Gachigi K., Kithinji J.P. Department of Mechanical and Manufacturing Engineering, University of Nairobi, Kenya, "*Characterisation and Evaluation of Activated Carbon Produced from Various Agricultural Wastes in Kenya for Water Treatment*", Oral presentation at PACN, Sustainable Water Conference 26th – 28th August 2009, University of Nairobi, Nairobi, September 2009

30 Odero O., Oduor FO., Wafula GA. 2009. Department of Chemistry, University of Nairobi, Kenya. "*Investigation of Lead Concentrations in Nairobi River and Adsorption Properties of Fish Bone*". Oral presentation at PACN, Sustainable Water Conference 26th – 28th August 2009, University of Nairobi, Nairobi, September 2009

31 Oyaro, N., Kimenyu, P.N., Chacha, J. S., Tsanuo, M. K. 2009. Department of Chemistry, Jomo Kenyatta University of Agriculture and Technology, Kenya. "*The Potential of Zea mays, Commelina bengelensis, Helianthus annuus and Amaranthus hybridus for Phytoremediation of Waste Water*". Oral presentation at PACN, Sustainable Water Conference 26th – 28th August 2009, University of Nairobi, Nairobi, September 2009

32 Gachanja A., Mwachiro E., Maina A.W. 2009. Department of Chemistry, Jomo Kenyatta University of Agriculture and Technology, Kenya. "*Water Purification Using Natural Plant Coagulants (Moringa oleifera Seeds and Maerua decumbens Root)*". Oral presentation at PACN, Sustainable Water Conference 26th – 28th August 2009, University of Nairobi, Nairobi, September 2009

33 Mavura W. J. Chemistry Department, Egerton University, Kenya. "*The Use of a Local Plant,* Maerua subcordata *Extract as a Water Clarifying Agent: Investigation of Chemical and Biochemical Properties*." Oral presentation at PACN, Sustainable Water Conference 26th – 28th August 2009, University of Nairobi, Nairobi, September 2009

34 Bunhu T, Tichagwa L. Department of Chemistry, University of Fort Hare, South Africa "*Development of PMMA-Grafted Lignocellulose/Clay Nano-Composites for the Removal of Heavy Metals and Chlorinated Organics from Water*". Oral presentation at PACN, Sustainable Water Conference 26th – 28th August 2009, University of Nairobi, Nairobi, September 2009

35 Kayira C, Masamba W, Mwatseteza J, Sajidu S. 2009. Department of Chemistry, University of Botswana. "*Defluoridation of Groundwater Using Raw Bauxite*" Oral presentation at PACN, Sustainable Water Conference 26th – 28th August 2009, University of Nairobi, Nairobi, September 2009

36 *The New Invisible College*, Caroline S. Wagner, Brookings Institution Press, 2008

ED_004926A_00025370-00022

This publication uses paper produced with recycled fibre together with virgin FSC (Forest Stewardship Council) fibre from sustainable forests.
The laminate used on this publication is produced from refined wood pulp from timber harvested from SFI managed forests. This laminate is sustainable, compostable and can be recycled.

Royal Society of Chemistry

Burlington House
Piccadilly, London
W1J 0BA, UK
Tel: +44 (0)20 7437 8656
Fax: +44 (0)20 7437 8883

Thomas Graham House
Science Park, Milton Road
Cambridge CB4 0WF, UK
Tel: +44 (0)1223 420066
Fax: +44 (0)1223 423623

Email: info@rsc.org
www.rsc.org

Registered Charity Number: 207890

© Royal Society of Chemistry 2010