Base Realignment and Closure
Program Management Office West
1455 Frazee Road, Suite 900
San Diego, California 92108-4310

CONTRACT NO. N62473-07-D-3211
CTO NO. 0018

FINAL

SURVEY UNIT 119 PROJECT REPORT

March 10, 2011

DCN: ECSD-3211-0018-0159

PARCEL G SANITARY SEWER
AND STORM DRAIN REMOVAL PROJECT
HUNTERS POINT SHIPYARD
SAN FRANCISCO, CALIFORNIA

Base Realignment and Closure
Program Management Office West
1455 Frazee Road, Suite 900
San Diego, California 92108-4310

CONTRACT NO. N62473-07-D-3211
CTO NO. 0018

FINAL

SURVEY UNIT 119 PROJECT REPORT

March 10, 2011

PARCEL G SANITARY SEWER AND STORM DRAIN REMOVAL PROJECT HUNTERS POINT SHIPYARD SAN FRANCISCO, CALIFORNIA

DCN: ECSD-3211-0018-0159

Prepared by:

TETRA TECH EC, INC.
1230 Columbia Street, Suite 750
San Diego, California 92101-8536

George Chiu
Technical Lead

Erik Abkemeier, CHP, PE, CSP, CHMM
Radiation Safety Officer

Bill Dougherty
Project Manager

TABLE OF CONTENTS

PAGE

ABBREVIATIONS AND ACRONYMS iii

1.0 INTRODUCTION 1-1
1.1 PURPOSE 1-1
1.2 BACKGROUND 1-1

2.0 RELEASE CRITERIA 2-1

3.0 FINAL STATUS SURVEYS 3-1
3.1 OBJECTIVE OF THE FINAL STATUS SURVEY 3-1
3.2 SURVEY UNIT 3-1
3.2.1 Trench Survey Unit 3-1
3.2.2 Import Fill Material 3-4
3.3 REFERENCE AREA 3-4

4.0 LABORATORY ANALYSIS 4-1

5.0 STATISTICAL TESTS 5-1

6.0 DOSE MODELING 6-1
6.1 MODELING INPUT PARAMETERS USING LARGER OF MDL OR REPORTED ACTIVITY 6-1
6.2 DOSE AND RISK MODELING RESULTS 6-2

7.0 RECOMMENDATION OF FINAL UNRESTRICTED RELEASE 7-1
7.1 DERIVED CONCENTRATION GUIDELINES 7-1
7.2 DCGL MODELING 7-1
7.3 AS LOW AS REASONABLY ACHIEVABLE 7-1
7.4 ENVIRONMENTAL ALARA PROCESS 7-1
7.4.1 Identification of Potential Radiological Impacts 7-2
7.4.2 Review of Radiological Impacts 7-2
7.4.3 Performance of Qualitative ALARA Analyses 7-2
7.4.4 Performance of Quantitative ALARA Analyses 7-3
7.5 ALARA ANALYSIS RESULTS 7-4
7.6 RECOMMENDATIONS 7-4

8.0 REFERENCES 8-1

TABLE OF CONTENTS
(Continued)

PAGE

TABLES

Table 3-1 Class 1 Soil Measurements – Trench Unit 119 3-3

Table 4-1 Survey Unit 119 Laboratory Results Comparison (pCi/g) 4-2

Table 6-1 Modeling Parameters Using Larger of MDL or Reported Activity Concentrations 6-1

Table 6-2 Dose and Risk Modeling Summary 6-2

FIGURES

Figure 1-1 Parcel G Survey Unit Key Plan

Figure 3-1 Parcel G Survey Unit 119, Area 18

ATTACHMENTS

Attachment 1 Trench Unit 119 Radiation/Contamination Survey Form (on CD only)

Attachment 2 Laboratory Analysis Reports for Trench Unit 119 (on CD only)

Attachment 3 Quality Assurance Sample Results (on CD only)

Attachment 4 Backfill Material RESRAD Report (on CD only)

Attachment 5 Trench Unit RESRAD Report (on CD only)

Attachment 6 Response to Comments

ABBREVIATIONS AND ACRONYMS

ALARA	as low as reasonably achievable
AM	Action Memorandum
^{214}Bi	bismuth-214
COC	chemical of concern
^{137}Cs	cesium-137
DCGL	derived concentration guideline level
EPA	U.S. Environmental Protection Agency
FSS	Final Status Survey
HPS	Hunters Point Shipyard
IR	Installation Restoration (Program)
keV	kiloelectron volt
MDA	minimum detectable activity
MDL	method detection limit
mrem/y	millirems per year
PAH	polynuclear aromatic hydrocarbon
PCB	polychlorinated biphenyl
pCi/g	picocuries per gram
^{226}Ra	radium-226
RASO	Radiological Affairs Support Office
ROC	radionuclide of concern
RPD	relative percent difference
^{90}Sr	strontium-90
SUPR	Survey Unit Project Report
SVOC	semivolatile organic compound
TPH	total petroleum hydrocarbons
TPH-d	total petroleum hydrocarbons quantified as diesel
TPH-extractable	total extractable petroleum hydrocarbons
TPH-g	total petroleum hydrocarbons quantified as gasoline
TPH-mo	total petroleum hydrocarbons quantified as motor oil

ABBREVIATIONS AND ACRONYMS
(Continued)

VOC	volatile organic compound
VSP	Visual Sample Plan

1.0 INTRODUCTION

1.1 PURPOSE

This Survey Unit Project Report (SUPR) documents the work performed in Survey Unit 119 (inclusive of the trench and import fill material used as backfill). The work was conducted under the final Base-wide Storm Drain and Sanitary Sewer Removal Work Plan, Revision 4 (TtEC 2010a). This SUPR summarizes the scope, approach, and radiological surveys resulting from the removal of the sanitary sewer and storm drains located within Area 18 in Parcel G at Hunters Point Shipyard (HPS), San Francisco, California.

Information that was provided in the SUPRs Abstract (TtEC 2010b) will be repeated only if there were exceptions to the information specific to Survey Unit 119.

1.2 BACKGROUND

Survey Unit 119 is the net sum of Trench Unit 119 and a volume of import fill material, which was used for backfill. Survey Unit 119 is located in Parcel G within Area 18 as identified on Figure 1-1.

Seven trench segments are associated with Trench Unit 119, five of which are located within Installation Restoration (IR) Site 9 and two of which are located within IR Site 33. The chemicals of concern (COCs) associated with IR Site 9 include metals, pesticides, polynuclear aromatic hydrocarbons (PAHs), semivolatile organic compounds (SVOCs), total petroleum hydrocarbons (TPH), and volatile organic compounds (VOCs). The COCs associated with IR Site 33 include cyanide, metals, PAHs, pesticides, polychlorinated biphenyls (PCBs), SVOCs, total extractable petroleum hydrocarbons (TPH-extractable), total oil and grease, TPH, TPH quantified as diesel (TPH-d), TPH quantified as gasoline (TPH-g), TPH quantified as motor oil (TPH-mo), and VOCs. Additionally, there are three manholes associated with Trench Unit 119.

Trench Unit 119 is located on Cochrane Street, running west toward Hussey Street, adjacent to Buildings 419 and 420. The footprint of Trench Unit 119 was 374 linear feet in length (114 meters). The total surface area was 6,232.30 square feet (579 square meters) of actual excavated trench, in varying depths up to 7 feet below ground surface.

This page intentionally left blank.

2.0 RELEASE CRITERIA

Release criteria information for Survey Unit 119 is presented in Section 2.0 of the SUPRs Abstract (TtEC 2010b). No additional radionuclides of concern (ROCs) were identified.

This page intentionally left blank.

3.0 FINAL STATUS SURVEYS

3.1 OBJECTIVE OF THE FINAL STATUS SURVEY

The objective of the Final Status Survey (FSS) was to demonstrate that identified residual radioactivity levels inside the excavated trench and within the import fill material used as backfill met the release criteria.

3.2 SURVEY UNIT

Survey Unit 119 is located in Parcel G within Area 18 and consists of only one trench unit. Survey Unit 119 is the net sum of Trench Unit 119 and a volume of import fill material, which was used for backfill. Import fill material was used for backfill because the spoils of the excavation of Trench Unit 119 had chemical analytical results for some of the COCs associated with IR Sites 9 and 33 that were above the reuse criteria. The COCs associated with IR Site 9 include metals, pesticides, PAHs, SVOCs, TPH, and VOCs. The COCs associated with IR Site 33 include cyanide, metals, PAHs, pesticides, PCBs, SVOCs, TPH-extractable, total oil and grease, TPH, TPH-d, TPH-g, TPH-mo, and VOCs.

3.2.1 Trench Survey Unit

Scan surveys and systematic sampling were performed in Trench Unit 119. Figure 3-1 shows the approximate systematic sampling locations, and provides the lengths of piping segments and locally assigned identification for each trench segment. Trench Unit 119 had a total surface area of 579 square meters. Systematic postexcavation samples were collected after a grid was established using Visual Sample Plan (VSP).

No measurements above the investigation level were identified during the performance of gamma scans in Trench Unit 119. Therefore, no additional surveys were performed. The trench unit gamma scan ranges, investigation level, and static measurement values are provided in Attachment 1.

One pipe sediment sample collected from Trench Unit 119 identified cesium-137 (^{137}Cs) activity to be present above the release criteria at 0.177 picocurie per gram (pCi/g). Based on this information, 51 biased samples were collected along the bottom of the trench. Five of the sample results identified radium-226 (^{226}Ra) activity to be present ranging from 1.8136 to 3.2420 pCi/g. In addition, one sample result identified ^{137}Cs activity at 0.11563 pCi/g. Approximately 12 cubic yards of soil was remediated from the areas identified as having contamination present that exceeded the release criteria for ^{226}Ra and ^{137}Cs. Nine postremediation samples were collected. Postremediation sample results indicated that all

contamination had been removed and no activity above the release criteria for any ROC was present.

VSP was used to generate 18 systematic sample locations (samples 61 to 78) based on a random start point and a triangular grid. One of the sample results identified ^{226}Ra activity to be present at 2.5556 pCi/g. An additional 3.75 cubic yards of soil was remediated from the area identified as having contamination present that exceeded the release criteria for ^{226}Ra, and two postremediation samples were collected. Postremediation sample results indicated that all contamination had been removed and no activity above the release criteria for any ROC was present.

VSP was used to generate a second set of 18 systematic sample locations (sample 81 to 98) based on a random start point and a triangular grid. Two of the sample results identified ^{226}Ra activity to be present at 1.7818 and 2.3052 pCi/g. An additional 8.25 cubic yards of soil was remediated from the areas identified as having contamination present that exceeded the release criteria for ^{226}Ra, and six postremediation samples were collected. Postremediation sample results indicated that all contamination had been removed and no activity above the release criteria for any ROC was present.

VSP was used to generate the final 18 systematic sample locations (samples 105 to 122) based on a random start point and a triangular grid. None of the sample results identified activity above the release criteria for any ROC. A summary of the 18 systematic sample results is provided in Table 3-1.

The ^{137}Cs results show 5 of the 18 values less than the reported minimum detectable activity (MDA). Additionally, two results above the MDA indicated flags that will require the values to be considered less than the MDA. However, the reported activity will be utilized for dose modeling purposes. The ^{226}Ra results show 10 of 18 values less than the MDA. Additionally, four results above the MDA indicated flags that will require the values to be considered less than the MDA. However, the reported activity will be utilized for dose modeling purposes.

The "#" flag indicates that "All peaks for activity calculation had bad shape." The "B" flag indicates "Activity <MDA and failed test." The "A" flag indicates "Activity is reported but the activity is <MDA." The "F" flag indicates "Failed fraction or key line test." These flag indications are printed on the on-site laboratory reports in Attachment 2. Section 4.3 of the SUPRs Abstract (TtEC 2010b) also discusses these flags in more detail. For the "#" flag, the SUPRs Abstract (TtEC 2010b) indicates that the peak did not have a proper Poisson shape and that these peaks are suspect. For the "B" flag, the SUPRs Abstract (TtEC 2010b) notes that the peak was not statistically differentiable from the background value and the background value was considered valid; activities reported with these codes should only be considered as <MDA

TABLE 3-1

Class 1 Soil Measurements - Trench Unit 119

	Results (pCi/g)											
Sample No.	^{137}Cs	Flags	MDA	≥MDA	^{90}Sr	Flags	MDA	≥MDA	^{226}Ra	Flags	MDA	≥MDA
105	0.031	B	0.038	0.038					0.052	B	0.769	0.769
106	0.059		0.026	0.059					0.065	B	0.975	0.975
107	0.079		0.031	0.079					0.856	B	0.942	0.942
108	0.016	B	0.022	0.022					1.131		0.770	1.131
109	0.058		0.040	0.058					1.200	F	1.070	1.200
110	0.082		0.026	0.082					1.397		0.768	1.397
111	0.028	F	0.026	0.028					0.520	B	0.777	0.777
112	0.052		0.022	0.052	-0.020	U	0.270	0.270	1.136		0.850	1.136
113	0.055		0.022	0.055					0.813	F	0.684	0.813
114	0.067	#F	0.055	0.067					0.300	B	0.985	0.985
115	0.045		0.019	0.045					-0.105	#B	0.846	0.846
116	0.007	B	0.029	0.029					0.202	B	0.771	0.771
117	-0.055	#B	0.058	0.058					1.040	B	1.170	1.170
118	0.042		0.027	0.042					1.041	F	0.861	1.041
119	0.055		0.026	0.055					0.208	B	0.986	0.986
120	0.064		0.020	0.064					0.706	F	0.662	0.706
121	0.038		0.025	0.038	-0.190	U	0.180	0.180	0.825		0.603	0.825
122	0.008	B	0.019	0.019					0.223	B	0.711	0.711
mean				**0.049**				**0.225**				**0.954**
std dev				**0.018**				**0.064**				**0.195**
median				**0.054**				**0.225**				**0.959**

Notes:
Information concerning flags associated with the on-site laboratory data can be found in Section 4.3 and a discussion of uncertainty can be found in Section 4.8 of the SUPRs Abstract (TtEC 2010b).

Abbreviations and Acronyms:
^{137}Cs – cesium-137
MDA – minimum detectable activity
pCi/g – picocuries per gram
^{226}Ra – radium-226
^{90}Sr – strontium-90
std dev – standard deviation
SUPR – Survey Unit Project Report

values. For the "A" flag, the SUPRs Abstract (TtEC 2010b) specifies that the activity calculation performed on the peaks for the ROC yields a lower value than the calculation for the MDA. This identifies that a calculation was performed and the peaks were found, but the resulting activity was lower than the MDA. For the "F" flag, the SUPRs Abstract (TtEC 2010b) notes that the most abundant peak for the particular isotope was not observed in the correct proportions relative to other peaks, either high or low. The activity was determined using the most conservative estimate relative to using either the primary peak only or the secondary peaks only. The "F" flag also occurs if the key-line abundant centroid does not meet the criteria to be a real peak based on the library. Therefore, if the centroid for a peak is too wide or too narrow, an

ED_004747_00002085-00013

"F" flag would be assigned to the peak because the software is forced to provide a concentration for the ROC.

Table 3-1 also contains a summary of the analytical results for radionuclides analyzed by methods other than gamma spectroscopy. The strontium-90 (^{90}Sr) results indicate that for both samples the results are less than the sample detection limit. The "J" flag indicates that "Results greater than sample detection limit but less than stated reporting limit." The "U" flag indicates "Result is less than the sample detection limit."

Summary statistics (standard deviation, median, and the mean activity greater than or equal to the MDA) are calculated and reported at the bottom of Table 3-1 for all radioanalytical results.

Complete laboratory analytical reports for each Trench Unit 119 soil sample, including biased and duplicate samples, are presented in Attachment 2.

3.2.2 Import Fill Material

Approximately 582 cubic yards of import fill material was used to complete backfilling activities. Import fill sample information is presented in Section 3.2.6 of the SUPRs Abstract (TtEC 2010b).

3.3 REFERENCE AREA

Reference area sample information for Survey Unit 119 is presented in Section 3.3 of the SUPRs Abstract (TtEC 2010b).

4.0 LABORATORY ANALYSIS

Information concerning laboratory analysis is presented in Section 4.0 of the SUPRs Abstract (TtEC 2010b). Specifically, the information concerning flags associated with the on-site laboratory data can be found in Section 4.3 and a discussion of uncertainty can be found in Section 4.8 of the SUPRs Abstract (TtEC 2010b). The average count time for the off-site laboratory was 57.69 minutes, while the average count time for the on-site laboratory was 58.85 minutes. Off-site laboratory method detection limits (MDLs) averaged 0.042 pCi/g for ^{137}Cs and 0.066 pCi/g for ^{226}Ra, while the on-site laboratory MDAs averaged 0.034 pCi/g for ^{137}Cs and 0.862 pCi/g for ^{226}Ra.

Results of the HPS and off-site laboratory data were reviewed to ensure that the activities for all ROCs were below the release criteria. These data were then evaluated by the Laboratory Manager. The on-site laboratory analyzed the samples directly for ^{226}Ra using the U.S. Environmental Protection Agency (EPA) 901.1 MOD method and calculating the ^{226}Ra activity from the 3.6 percent abundant 186.2 kiloelectron-volt (keV) gamma spectrum line for ^{226}Ra. The off-site laboratories counted the samples using the EPA 901.1 MOD method, and the ^{226}Ra results were calculated and reported from the 46.09 percent abundant 609.31 keV gamma spectrum line of bismuth-214 (^{214}Bi) after an in-growth period of greater than 21 days to allow the ^{214}Bi to approach secular equilibrium with ^{226}Ra.

To perform a detailed comparison, analytical results for the samples that were analyzed by both the on-site and off-site laboratories were placed into a spreadsheet so that data could be compared directly. The review consisted of identifying sample results that reported activity above the MDA/MDL for any ROC. Once identified, the next step was to determine if either laboratory reported results above the MDA/MDL for the same samples. The on-site laboratory reported ^{137}Cs activity above the MDA for 2 of the 13 samples, while the off-site laboratory did not report ^{137}Cs activity above the MDL for any sample. Therefore, no direct comparison could be made.

The on-site and off-site laboratories reported ^{226}Ra activity above the MDA/MDL for all 13 samples. As a result, the ^{226}Ra activities for 13 samples were compared directly for precision. The results of the comparison showed relative percent differences (RPDs) from 7.56 to 126.59. One off-site laboratory sample reported higher activity than the on-site laboratory by 0.102 pCi/g with an RPD of 7.56. Since both laboratories reported activity below the release criteria and the RPD was within 30, no additional comparison was made for this sample. Since the remaining on-site laboratory samples reported higher ^{226}Ra activity than the off-site laboratory and the RPDs were not within 30, as stated in the Sampling and Analysis Plan (TtEC 2010a), no additional comparison was required. However, as an added comparison for informational purposes, the daughter isotopes of ^{226}Ra (^{214}Bi and lead-214) were compared.

The highest ^{226}Ra activity reported by the off-site laboratory was 1.650 pCi/g, which is well below the activity for the same sample processed in the on-site laboratory. In addition, the ^{226}Ra activities reported for the final 18 systematic samples from either laboratory were well below the release criteria. As a result, no further laboratory comparisons were made.

Table 4-1 presents a comparison summary of the on-site and off-site laboratory sample results. On-site laboratory sample result reports are provided in Attachment 2; quality assurance sample result reports from the off-site laboratory are provided in Attachment 3.

TABLE 4-1

SURVEY UNIT 119 LABORATORY RESULTS COMPARISON (pCi/g)

Sample ID	On-site Laboratory							Off-site Laboratory (QA)						
	Count Time (min)	^{137}Cs			^{226}Ra			Count Time (min)	^{137}Cs			^{226}Ra		
		Activity	MDA	2σ Error	Activity	MDA	2σ Error		Activity	MDL	2σ Error	Activity	MDL	2σ Error
70-PDT-119-01	45	-0.036	0.035	0.174	2.289	1.080	1.402	90	-0.024	0.040	0.050	1.180	0.070	0.210
70-PDT-119-03	90	-0.011	0.037	0.069	2.373	0.796	1.032	90	0.005	0.036	0.042	1.380	0.070	0.210
70-PDT-119-38	45	-0.042	0.027	0.027	1.308	0.713	0.920	90	-0.004	0.030	0.042	0.294	0.057	0.099
70-PDT-119-45	90	-0.003	0.026	0.033	1.298	0.754	0.942	90	0.000	0.044	0.053	1.400	0.060	0.180
70-PDT-119-48	45	-0.038	0.050	0.577	3.242	1.670	2.126	90	-0.021	0.041	0.052	1.650	0.060	0.200
70-PDT-119-53	45	-0.013	0.029	0.051	1.138	0.728	0.919	90	-0.002	0.026	0.032	0.440	0.050	0.110
70-PGT-119-61	90	-0.026	0.047	0.069	1.293	0.779	0.968	30	0.017	0.042	0.055	0.530	0.060	0.180
70-PGT-119-75	45	0.044	0.026	0.039	1.076	0.743	0.948	30	0.036	0.040	0.056	0.530	0.050	0.150
70-PGT-119-82	90	-0.019	0.032	0.063	0.961	0.603	0.759	30	-0.020	0.060	0.150	0.280	0.090	0.150
70-PGT-119-94	45	0.007	0.039	0.048	2.305	0.987	1.295	30	0.012	0.055	0.069	1.340	0.070	0.260
70-PGT-119-103	45	-0.025	0.039	0.083	1.183	0.815	1.037	30	0.013	0.041	0.052	0.360	0.080	0.150
70-PGT-119-108	45	0.016	0.022	0.030	1.131	0.770	0.977	30	-0.013	0.038	0.049	0.380	0.060	0.120
70-PGT-119-110	45	0.082	0.026	0.053	1.397	0.768	0.990	30	-0.020	0.058	0.074	0.670	0.080	0.210

Sample ID	On-site Laboratory							Off-site Laboratory (QA)						
	Count Time (min)	^{214}Bi			^{214}Pb			Count Time (min)	^{214}Bi			^{214}Pb		
		Activity	MDA	2σ Error	Activity	MDA	2σ Error		Activity	MDL	2σ Error	Activity	MDL	2σ Error
70-PDT-119-01	45	1.210	0.063	0.218	0.953	0.121	0.254	90	1.180	0.070	0.210	1.140	0.060	0.160
70-PDT-119-03	90	1.386	0.084	0.226	1.347	0.076	0.179	90	1.380	0.070	0.210	1.520	0.070	0.190
70-PDT-119-38	45	0.448	0.039	0.125	0.467	0.037	0.112	90	0.294	0.057	0.099	0.384	0.050	0.097
70-PDT-119-45	90	1.131	0.057	0.141	1.295	0.056	0.161	90	1.400	0.060	0.180	1.380	0.060	0.150
70-PDT-119-48	45	1.848	0.106	0.268	2.251	0.144	0.354	90	1.650	0.060	0.200	1.850	0.080	0.210
70-PDT-119-53	45	0.527	0.054	0.144	0.454	0.035	0.105	90	0.440	0.050	0.110	0.570	0.040	0.100
70-PGT-119-61	90	0.750	0.053	0.145	0.782	0.066	0.152	30	0.530	0.060	0.180	0.700	0.060	0.160
70-PGT-119-75	45	0.336	0.035	0.106	0.527	0.068	0.165	30	0.530	0.050	0.150	0.430	0.070	0.120
70-PGT-119-82	90	0.440	0.052	0.121	0.309	0.048	0.076	30	0.280	0.090	0.150	0.480	0.060	0.140
70-PGT-119-94	45	1.234	0.080	0.231	1.255	0.087	0.197	30	1.340	0.070	0.260	1.410	0.080	0.260
70-PGT-119-103	45	0.535	0.062	0.154	0.427	0.078	0.180	30	0.360	0.080	0.150	0.480	0.100	0.170
70-PGT-119-108	45	0.521	0.047	0.124	0.395	0.063	0.132	30	0.380	0.060	0.120	0.470	0.060	0.130
70-PGT-119-110	45	0.833	0.063	0.174	0.707	0.067	0.157	30	0.670	0.080	0.210	0.760	0.080	0.200

Notes:
Information concerning flags associated with the on-site laboratory data can be found in Section 4.3 and a discussion of uncertainty can be found in Section 4.8 of the SUPRs Abstract (TtEC 2010b).
Values in red exceed the release criteria for that radionuclide of concern.

Abbreviations and Acronyms:

^{214}Bi – bismuth-214
^{137}Cs – cesium-137
MDA – minimum detectable activity
MDL – method detection limit
min – minute
^{214}Pb – lead-214
pCi/g – picocuries per gram
QA – quality assurance
^{226}Ra – radium-226
SUPR – Survey Unit Project Report

ED_004747_00002085-00016

5.0 STATISTICAL TESTS

Because the majority of the data in Table 3-1 were interpreted to be less than the MDA and all sample results were less than the release criteria for the ROCs, there was no basis for performing statistical tests for Survey Unit 119.

This page intentionally left blank.

6.0 DOSE MODELING

6.1 MODELING INPUT PARAMETERS USING LARGER OF MDL OR REPORTED ACTIVITY

Table 6-1 shows the mean concentrations of ^{137}Cs, ^{226}Ra, and ^{90}Sr from using the actual activity and replacing it with the MDL value if the reported activity was less than the MDL. The activity used to model each radionuclide is based on the isotopic net concentration.

TABLE 6-1

MODELING PARAMETERS USING LARGER OF MDL OR REPORTED ACTIVITY CONCENTRATIONS

Survey Unit 119	Residual Activity MDL (pCi/g)			Volume of Material (yd^3)	Percent of Fill	Weighted Sum (pCi/g)		
	^{137}Cs	^{90}Sr	^{226}Ra			^{137}Cs	^{90}Sr	^{226}Ra
Import Fill	0.053	0.070	1.094	582	100.00%	0.053	0.070	1.094
Backfill Material Average Activity	0.053	0.070	1.094	Weighted Sum Activity		0.053	0.070	1.094
Trench Unit Average Activity	0.050	0.225	0.955	Backfill Net Activity		0.053	0.070	0.373
Reference Area Average Activity	0.040	0.194	0.721	Trench Unit Net Activity		0.050	0.225	0.234

Abbreviations and Acronyms:
^{137}Cs – cesium-137
MDL – method detection limit
pCi/g – picocuries per gram
^{226}Ra – radium-226
^{90}Sr – strontium-90
yd^3 – cubic yard

Using the data provided in Table 6-1, the average net concentrations of material used as backfill in Survey Unit 119 were 0.053 pCi/g for ^{137}Cs, 0.070 pCi/g for ^{90}Sr, and 0.373 pCi/g for ^{226}Ra. The trench unit average net concentrations were 0.050 pCi/g for ^{137}Cs, 0.225 pCi/g for ^{90}Sr, and 0.234 pCi/g for ^{226}Ra.

6.2 DOSE AND RISK MODELING RESULTS

Modeling resulted in a net residual dose of 4.898 millirems per year (mrem/y) with an increased cancer risk of 8.290×10^{-5} for the backfill material and 3.530 mrem/y with an increased cancer risk of 5.790×10^{-5} for the trench unit.

These results are summarized in Table 6-2. Based on these results, no further dose modeling is determined to be reasonable or prudent. The RESRAD reports can be found in Attachments 4 and 5.

TABLE 6-2

DOSE AND RISK MODELING SUMMARY

Dose and Risk Modeling Summary - Trench Unit 119										
Survey Unit	Modeling Parameter	Survey Area	Average Activity (pCi/g)			Net Activity (pCi/g)			Dose (mrem/y)	Cancer Risk
			^{137}Cs	^{90}Sr	^{226}Ra	^{137}Cs	^{90}Sr	^{226}Ra		
Backfill	Activity MDA	582 cy	0.053	0.070	1.094	0.053	0.070	0.373	4.898	8.290E-05
Trech Unit	Activity MDA	579 m^2	0.050	0.225	0.955	0.050	0.225	0.234	3.530	5.790E-05

Abbreviations and Acronyms:
^{137}Cs – cesium-137
cy – cubic yard
m^2 – square meter
MDA – minimum detectable activity
mrem/y – millirems per year
pCi/g – picocuries per gram
^{226}Ra – radium-226
^{90}Sr – strontium-90

ED_004747_00002085-00020

7.0 RECOMMENDATION OF FINAL UNRESTRICTED RELEASE

7.1 DERIVED CONCENTRATION GUIDELINES

The radionuclide-specific release criteria, referred to as derived concentration guideline levels (DCGLs), used for the FSS are equivalent to the ROC release criteria established in the final Base-wide Radiological Removal Action, Action Memorandum – Revision 2006 (AM) (DON 2006). The DCGLs are presented in terms of mass activity concentrations and refer to average levels of radiation or radioactivity above background levels.

7.2 DCGL MODELING

DCGLs were obtained from the AM and were then modeled using RESRAD Version 6.3, based on the 25 mrem/y total effective dose equivalent or were otherwise risk-based; the final doses are all less than the 15 mrem/y release criterion for HPS. The model for the critical group was based on default RESRAD Version 6.5 parameters. This model shows that with all the DCGLs combined (the ROCs), the dose to the average member of the critical group for this trench unit would be 13.41 mrem/y.

7.3 AS LOW AS REASONABLY ACHIEVABLE

As low as reasonably achievable (ALARA) is a philosophy of striving for excellence in the practice of health physics and is an important aspect of radiation-safety regulations. The National Council on Radiation Protection and Measurements has stated "ALARA is simply the continuation of good radiation-protection programs and practices which traditionally have been effective in keeping the average and individual exposures for monitored workers well below the limits" (NCRP 1993). The application of ALARA clearly includes the consideration of economic and social factors, and thus will inherently be different for different sources or facilities.

The ALARA concept is founded on the professional judgment of radiation-safety managers and personnel and is not, therefore, able to be used as a measure as to whether or not a particular radiation-safety program is adequate in comparison with other programs. Additionally, the ALARA concept does not provide a numerical limit below which the ALARA concept is achieved.

7.4 ENVIRONMENTAL ALARA PROCESS

This section describes the steps taken to implement the environmental ALARA policy:

- Identification of Potential Radiological Impacts
- Review of Radiological Impacts

- Performance of Qualitative ALARA Analyses
- Performance of Quantitative ALARA Analyses

7.4.1 Identification of Potential Radiological Impacts

Each new radiological operation was subjected to ALARA reviews before work began to ensure that radiation exposures to workers, the public, and the environment met ALARA principles. ALARA reviews were conducted for all operations, practices, and procedures that have potential for individual or collective doses to workers. Reviews culminated in changes or additions to work planning documents, standard operating procedures, and radiological work permits.

These documents were used to identify activities that have potential for radiological environmental impacts and could require environmental ALARA analysis. If a radiological impact was identified that could impact the environment significantly, the Radiation Safety Officer communicated the impact to the work staff and the Radiological Affairs Support Office (RASO).

7.4.2 Review of Radiological Impacts

Radiological impacts to the environment, workers, and the public from field operations were assessed for compliance with ALARA principles. Results from radiological survey activities, and air, soil, sediment, and water samples were used to assess the radiological impacts of HPS activities.

Environmental radiological impacts from radiological activities were determined using nine methods: 1) air monitoring stations located around the excavation site perimeter to track radiological impacts; several air-sampling devices monitor radionuclides in the ambient air, and the results of this monitoring are provided to the RASO on a monthly basis; 2) field monitoring and sampling to identify areas requiring additional remediation; 3) remediation of contaminated areas at or above the release criteria; 4) control of radiologically impacted areas and work sites; 5) frisking of personnel and examining equipment leaving a radiologically controlled area; 6) use of release criteria that equate to dose and risk; 7) review of historical radiological operations to allow complete investigation of all areas of radiological concern; 8) characterization of radiologically impacted sites to ensure complete removal of radioactive material above the release criteria; and 9) dosimetry worn by personnel to measure time-averaged doses from gamma radiation.

7.4.3 Performance of Qualitative ALARA Analyses

Laboratory analyses were performed for 19 different isotopes to ensure that any possible radioactive contamination has been identified. After each excavation was completed, the qualitative radiological impacts from operations were evaluated by performing a dose and risk

assessment. The results of analysis and assessments are provided to the RASO and regulatory agencies for review.

7.4.4 Performance of Quantitative ALARA Analyses

Based on qualitative ALARA analyses, excavation projects that could cause the potential dose to the public to exceed 1 millirem (individual) or 10 person-rem (collective) were subjected to quantitative ALARA analyses using the steps described below. To date, no operations at HPS have resulted in an individual dose to the public greater than 1 millirem or a collective dose greater than 10 person-rem.

Quantitative ALARA analyses include societal, technological, economic, and public policy considerations. In addition, these ALARA analyses consider Nuclear Regulatory Commission guidance for performing the following environmental ALARA assessments:

- Identification of possible radiation protection systems, such as alternative operating methods or controls, that are reasonably achievable. The options range from the most rudimentary (base case) to the most technologically sophisticated systems.
- Quantification of exposures and doses to workers and the public in the vicinity of the work through air monitoring and dosimetry.
- Quantification of the economic factors, including the costs of purchasing, installing, operating, and maintaining the radiological equipment, and the potential health effects associated with the exposure of people and any other direct or indirect cost resulting from exposures to radiation during investigations and/or remediations.
- Identification and estimation of other health and nonhealth detriments and benefits, such as equipment loss and accidents.
- Evaluation of process alternatives using a quantitative cost-benefit analysis, when possible. When evaluations included assumptions, judgments, and limitations that could be quantified, and potential doses were well below the dose limit, qualitative analyses were used with full documentation.
- Implementation of the ALARA principles and monitoring of the results.

The following specific factors were used in performing a quantitative ALARA analysis:

- Dose to workers, the public, and the environment before and during work processes
- Residual dose to the local population
- Applicable alternative processes (treatments, operating methods, or controls) for site investigations or remediations
- Costs for each alternative evaluated
- Societal and environmental (positive and negative) impacts associated with alternatives

7.5 ALARA ANALYSIS RESULTS

Based on recent estimates of dose to the public from HPS operations, only qualitative ALARA analyses were required. Much of the data and analyses used for environmental ALARA evaluations were developed as part of the routine work processes.

Qualitative ALARA analyses resulted in no gamma measurements above the investigation levels; none of the sample results identified activity above the release criteria for any ROC; no air sampling results were above 10 percent of the derived air concentration; and no personnel dosimetry badges processed identified gamma dose above background levels.

7.6 RECOMMENDATIONS

Dose modeling using RESRAD determined that the potential dose of Survey Unit 119 due to activity concentrations greater than or equal to the MDL or the MDA has been determined to be 4.898 mrem/y with an increased cancer risk of 8.290×10^{-5} as shown in Table 6-2. These results are less than the EPA criteria of 15 mrem/y with an increased cancer risk of less than 3×10^{-4}, which supports free release. Therefore, no further action is recommended for Survey Unit 119.

8.0 REFERENCES

DON (Department of the Navy). 2006. Final Base-wide Radiological Removal Action, Action Memorandum – Revision 2006, Hunters Point Shipyard, San Francisco, California.

NCRP (National Council on Radiation Protection and Measurements). 1993. The National Council on Radiation Protection and Measurements, Report Number 116.

TtEC (Tetra Tech EC, Inc.). 2010a. Final Project Work Plan, Revision 4. Base-wide Storm Drain and Sanitary Sewer Removal, Hunters Point Shipyard, San Francisco, California. July 30.

——————. 2010b. Final Survey Unit Project Reports Abstract, Revision 2. January 27.

This page intentionally left blank.

FIGURES

This page intentionally left blank.

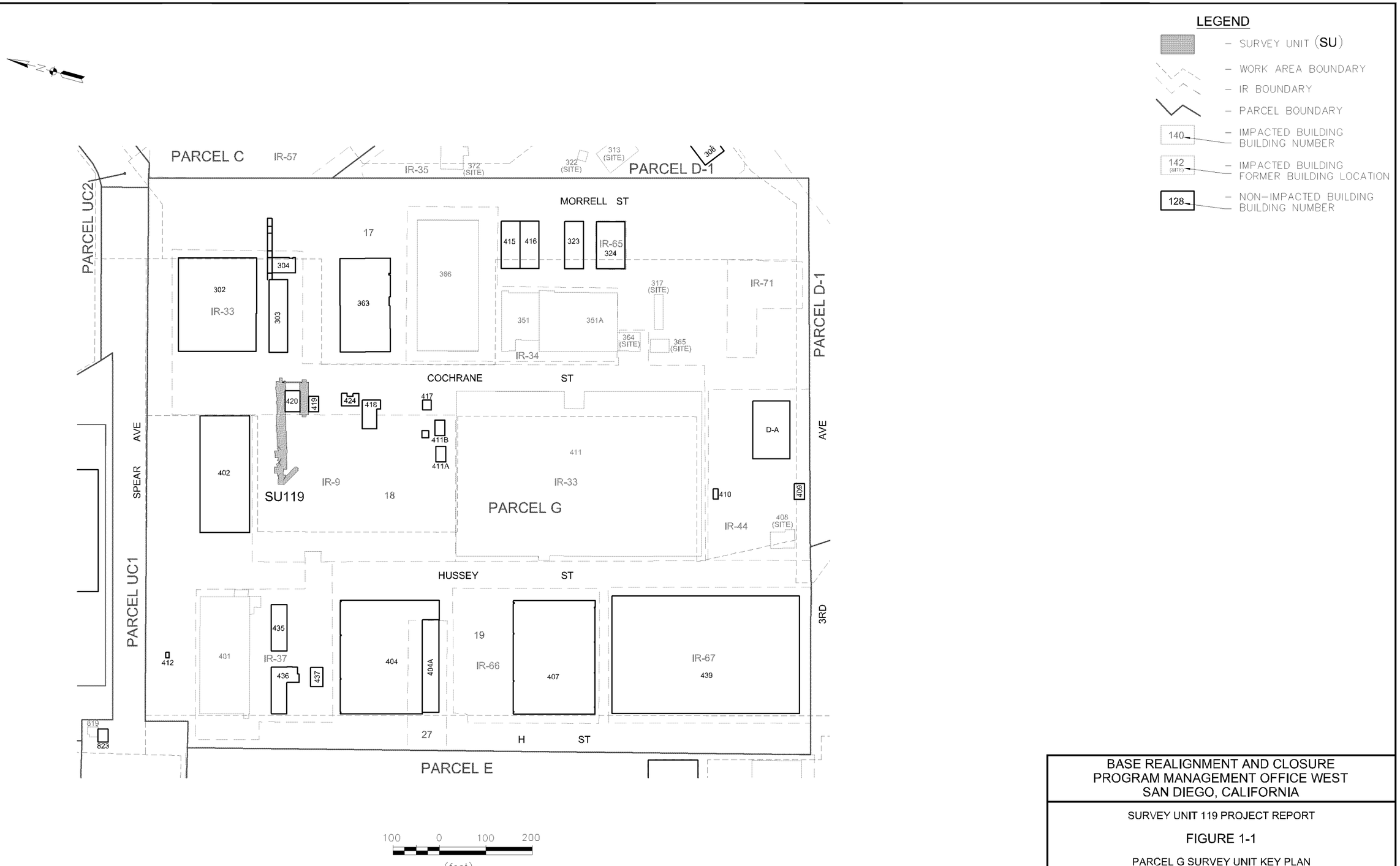

BASE REALIGNMENT AND CLOSURE
PROGRAM MANAGEMENT OFFICE WEST
SAN DIEGO, CALIFORNIA

SURVEY UNIT 119 PROJECT REPORT

FIGURE 1-1

PARCEL G SURVEY UNIT KEY PLAN

HUNTERS POINT SHIPYARD, SAN FRANCISCO, CA

REVISION: A
AUTHOR: KLT
PROJECT NO: 1990-072X
FILE: SEE BELOW

TETRA TECH EC, INC.

J:\CAD DEPT\HUNTERS POINT\CTO 72-FIGURES\FIGURES 1-1 AND 3-1\FINAL\PACKAGE 31\SU119_FIGURE 1-1_12-15-10.DWG

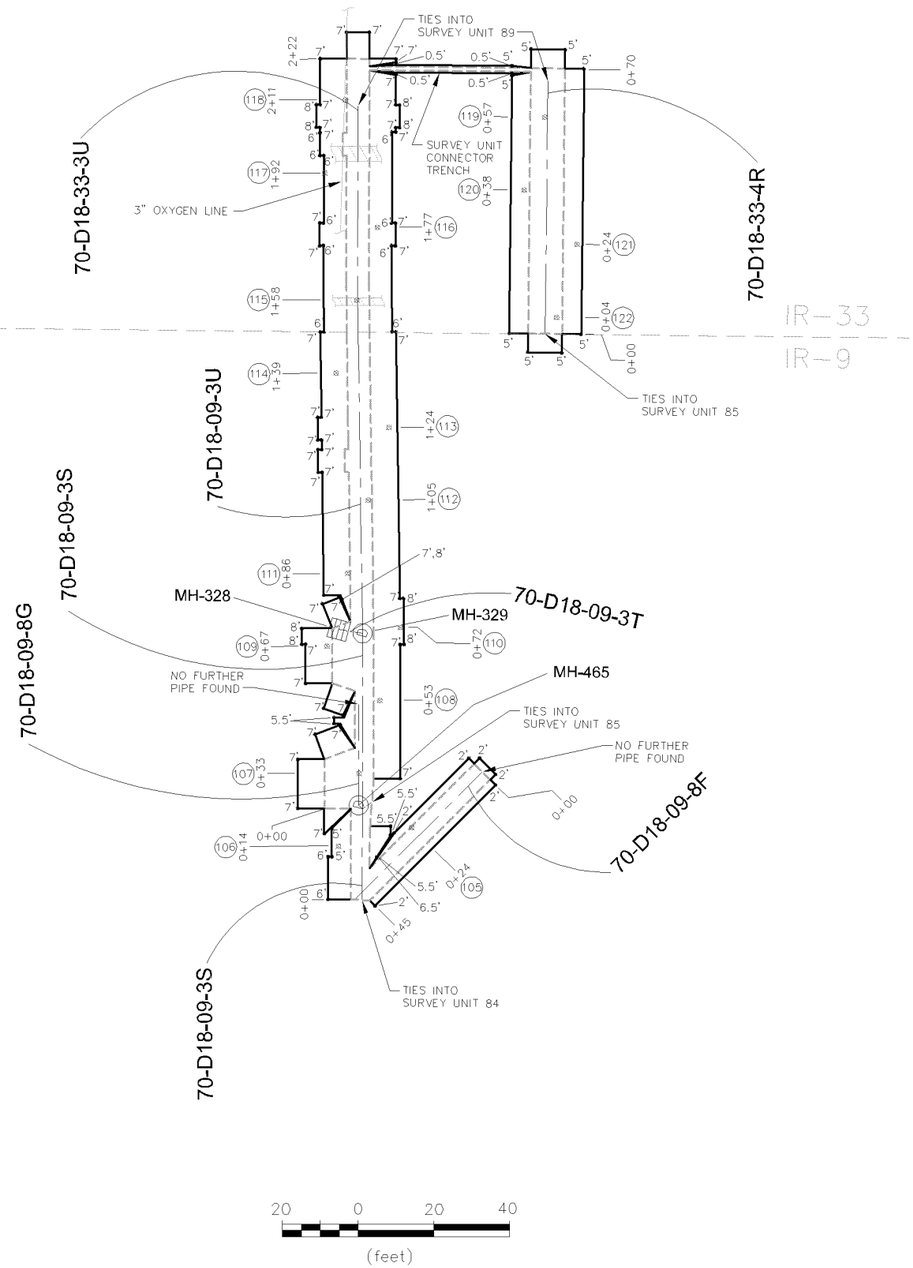

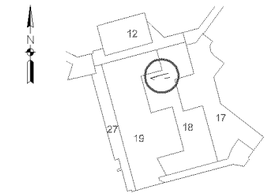

KEY PLAN

LEGEND

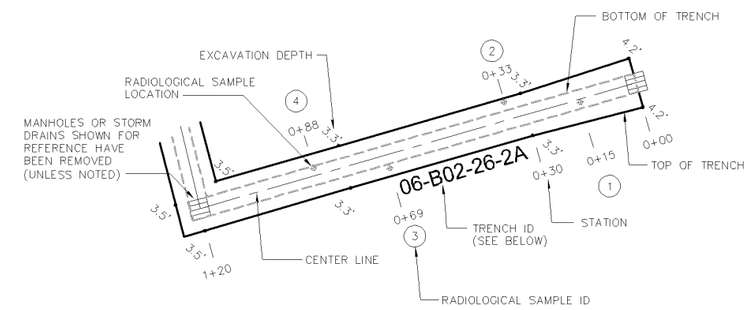

TRENCH ID

XX-XXX-XX-XX

- SEGMENT NO.
- IR SITE ID, 00 IF NON-IR SITE
- WORK/BLDG AREA
- CTO OR TO NUMBER

IR BOUNDARY
PARCEL BOUNDARY
WORK AREA BOUNDARY
EP EXTRANEOUS PIPE
140 BUILDING
CONCRETE
ROCK

SURVEY UNIT SURFACE AREA = 579 SQUARE METERS
TOTAL LENGTH OF TRENCH = 374 LINEAR FEET

BASE REALIGNMENT AND CLOSURE
PROGRAM MANAGEMENT OFFICE WEST
SAN DIEGO, CALIFORNIA

SURVEY UNIT 119 PROJECT REPORT

FIGURE 3-1

PARCEL G SURVEY UNIT 119, AREA 18

HUNTERS POINT SHIPYARD, SAN FRANCISCO, CA

REVISION: A
AUTHOR: K. TODD
PROJECT NO: 1990-072X
FILE: SEE BELOW

TETRA TECH EC, INC.

C:\DOCUMENTS AND SETTINGS\KAREN.TODD\MY DOCUMENTS_HUNTERS POINT 06-04-10\PARCEL G\FINAL\SU119_FIGURE 3-1_06-04-10.DWG

ATTACHMENT 1

TRENCH UNIT 119
RADIATION/CONTAMINATION SURVEY FORM
(on CD only)

This page intentionally left blank.

RADIATION/CONTAMINATION SURVEY SUPPLEMENT

Date: 5/27/2009	Time: 08:20	INSTRUMENTATION USED						
		Model Inst/Det.	Serial Number	Calibration Due Date	Instrument % Efficiency	Total % Efficiency	MDC/MDA + (dpm/100cm2)	Background + (dpm/100cm2)
Survey Number: HPS-SU-119								
Location: Parcel G								
Surveyor: J. Cunningham								
Reviewed By: (Print & Sign)		2350-1 44-10	232936 186956	2/18/2010				

Isotopes of Concern: ^{226}Ra ^{90}Sr ^{137}Cs

Description of drawing: Trench Scan Survey

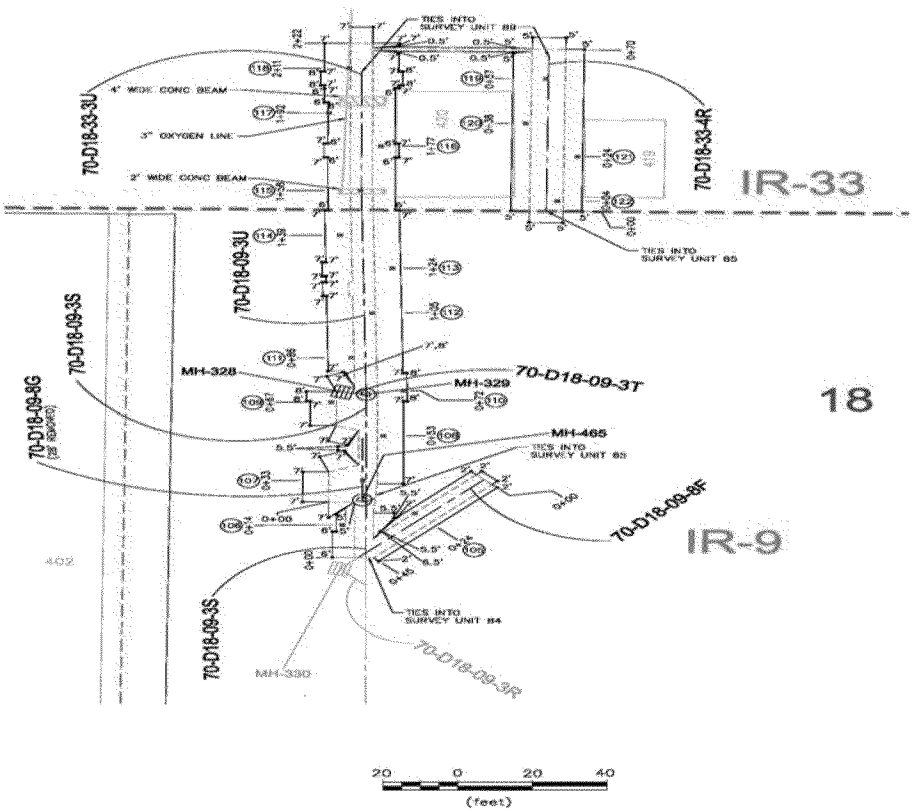

Comments:

Scan range for 2350-1 Instrument is 3.00 - 9.40 Kcpm

3 sigma investigation level for 2350-1 Instrument is 7048 cpm

Picture is representative of material surveyed.

denotes swipe location or fixed α/β readings

# denotes G/A radiation readings

/ # denotes contact / 1 meter radiation readings.

* denotes highest radiation reading on contact

LAW denotes large area masslinn wipe

Δ denotes static location.

\+ Unless Otherwise Noted

All readings in μR/hr unless otherwise noted

K = 1000

RADIATION/CONTAMINATION SURVEY SUPPLEMENT

SURVEY NUMBER: HPS-SU-119

SURVEYOR: J. Cunningham | LOCATION: Parcel G

Location	Exposure Rate (µR/hr)		Fixed + Removable (NET)			Removable (NET)		Comments
	Contact	1 Meter	Gamma (cpm)	Alpha dpm/100cm2	Beta/Gamma dpm/100cm2	Alpha dpm/100cm2	Beta/Gamma dpm/100cm2	
105			5225					
106			5195					
107			5972					
108			5635					
109			5528					
110			5130					
111			5972					
112			5795					
113			5325					
114			5333					
115			5475					
116			5237					
117			5475					
118			5278					
119			5380					
120			5975					
121			5716					
122			5932					

Reviewer: | Date:

ATTACHMENT 2

LABORATORY ANALYSIS REPORTS FOR TRENCH UNIT 119 (on CD only)

This page intentionally left blank.

ORTEC g v - i (3263) Wan32 G53W2.10 22-JAN-2009 20:15:29
New World Technology Spectrum name: 3N000185.An1

Sample description
Parcel D 70-PDT-119-01 339g
1/21/09 13:00

Acquisition information
Start time: 22-Jan-2009 19:30:19
Live time: 2700
Real time: 2703

- -

***** S U M M A R Y O F N U C L I D E S I N S A M P L E *****

Nuclide		Time of Count Activity pCi/g	Uncertainty 2 Sigma Counting pCi/g	Total pCi/g	MDA pCi/g
Ac-228	F	4.3306E-01	1.4508E-01	1.4754E-01	0.415E+00
AM-241	#B	-8.3053E-03	1.8949E-01	1.8949E-01	0.110E+00
Bi-212	F	4.3858E-01	4.5968E-01	4.6047E-01	0.383E+00
BI-214	F	1.2104E+00	2.0493E-01	2.1771E-01	0.634E-01
CO-60	#B	2.5442E-02	1.8773E-01	1.8774E-01	0.601E-01
CS-137	#B	-3.6434E-02	1.7356E-01	1.7357E-01	0.353E-01
EU-152	#B	7.3758E-02	8.4097E-02	8.4258E-02	0.878E-01
EU-154	#F	1.2690E-01	8.0940E-02	8.1433E-02	0.392E-01
K-40		8.9542E+00	1.7688E+00	1.8544E+00	0.942E+00
Pa-234	F	1.8595E-01	9.6323E-02	9.7360E-02	0.152E+00
Pb-210	#B	-1.7402E+00	4.0590E+00	4.0612E+00	0.151E+01
Pb-212		1.5554E+00	1.8366E-01	2.0946E-01	0.103E+00
PB-214		9.5288E-01	2.4636E-01	2.5359E-01	0.121E+00
RA-226		2.2887E+00	1.3947E+00	1.4025E+00	0.108E+01
Th-230	#B	-1.2351E+00	2.7290E+01	2.7290E+01	0.881E+01
Th-234	B	-9.7156E+00	1.0787E+01	1.0837E+01	0.170E+01
Tl-208	F	6.2051E-01	1.2314E-01	1.2875E-01	0.450E-01
U-235	#B	-1.4078E-01	4.2568E-01	4.2578E-01	0.869E-01

- All peaks for activity calculation had bad shape.
* - Activity omitted from total
& - Activity omitted from total and all peaks had bad shape.
< - MDA value printed.
A - Activity printed, but activity < MDA.
B - Activity < MDA and failed test.
C - Area < Critical level.
F - Failed fraction or key line test.
H - Halflife limit exceeded

---------- S U M M A R Y ----------

Total Activity (39.2 to 2494.9 keV) 1.558E+01 pCi/g

Laboratory: New World Technology

ORTEC g v - i (3263) Npp32 G53W3.10 22-JAN-2009 20:28:11
New World Technology Spectrum name: 1N000180.An1

Sample description
Parcel D 70-PDT-119-02 366g
1/21/09 13:02

Acquisition information
Start time: 22-Jan-2009 19:43:02
Live time: 2700
Real time: 2702

- -

***** S U M M A R Y O F N U C L I D E S I N S A M P L E *****

Nuclide		Time of Count Activity pCi/g	Uncertainty 2 Sigma Counting pCi/g	Total pCi/g	MDA pCi/g
Ac-228	F	9.1647E-01	2.1556E-01	2.2293E-01	0.207E+00
AM-241	#A	-2.0638E-02	1.2228E-01	1.2230E-01	0.737E-01
Bi-212	F	1.3864E+00	4.4138E-01	4.4956E-01	0.217E+00
BI-214	F	8.5874E-01	1.7139E-01	1.7918E-01	0.598E-01
CO-60	#F	2.8630E-02	4.3828E-02	4.3863E-02	0.225E-01
CS-137	#B	-8.5315E-03	4.5931E-02	4.5934E-02	0.314E-01
EU-152	C	1.3027E-01	1.2967E-01	1.2999E-01	0.785E-01
EU-154	C	4.8183E-02	5.0790E-02	5.0902E-02	0.421E-01
K-40		1.0480E+01	1.4950E+00	1.6309E+00	0.324E+00
Pa-234	#F	2.1369E-01	1.4028E-01	1.4122E-01	0.829E-01
Pb-210		1.8065E+00	1.2822E+00	1.2897E+00	0.791E+00
Pb-212	F	1.0507E+00	1.3506E-01	1.5123E-01	0.775E-01
Pb-214		1.0764E+00	1.9518E-01	2.0664E-01	0.672E-01
RA-226	B	8.2111E-01	1.0941E+00	1.0953E+00	0.890E+00
Th-230	B	1.6085E+00	9.6312E+00	9.6336E+00	0.804E+01
Th-234		2.4458E+00	8.1960E-01	8.6025E-01	0.818E+00
Tl-208		2.7179E-01	7.3625E-02	7.5450E-02	0.476E-01
U-235	#B	-4.1350E-02	3.2696E-02	3.2804E-02	0.703E-01

- All peaks for activity calculation had bad shape.
* - Activity omitted from total
& - Activity omitted from total and all peaks had bad shape.
< - MDA value printed.
A - Activity printed, but activity < MDA.
B - Activity < MDA and failed test.
C - Area < Critical level.
F - Failed fraction or key line test.
H - Halflife limit exceeded

---------- S U M M A R Y ----------

Total Activity (39.3 to 2491.3 keV) 2.051E+01 pCi/g

Laboratory: New World Technology

ORTEC g v - i (3263) Wan32 G53W2.10 23-JAN-2009 09:04:50
New World Technology Spectrum name: 3N000186.An1

Sample description
Parcel D 70-PDT-119-03 373g
1/21/09 13:10

Acquisition information
Start time: 23-Jan-2009 07:32:41
Live time: 5400
Real time: 5407

- -

***** S U M M A R Y O F N U C L I D E S I N S A M P L E *****

Nuclide		Time of Count Activity pCi/g	Uncertainty 2 Sigma Counting pCi/g	Total pCi/g	MDA pCi/g
Ac-228		1.9776E+00	3.0736E-01	3.3087E-01	0.139E+00
AM-241	#B	-2.3866E-02	2.1550E-01	2.1551E-01	0.703E-01
Bi-212	F	1.2006E+00	3.8547E-01	3.9247E-01	0.263E+00
BI-214	F	1.3865E+00	2.0985E-01	2.2611E-01	0.839E-01
CO-60	#F	2.4249E-02	2.7426E-02	2.7466E-02	0.160E-01
CS-137	#B	-1.1221E-02	6.9019E-02	6.9023E-02	0.369E-01
EU-152	F	8.9615E-02	1.2100E-01	1.2116E-01	0.783E-01
EU-154	F	1.1141E-01	9.3789E-02	9.4118E-02	0.498E-01
K-40	#	1.1695E+01	1.1742E+00	1.3811E+00	0.238E+00
Pa-234	#B	-2.2531E-02	1.0996E-01	1.0997E-01	0.762E-01
Pb-210	#B	-1.7296E+00	3.5159E+00	3.5184E+00	0.939E+00
Pb-212		1.9333E+00	1.2998E-01	1.8047E-01	0.710E-01
PB-214		1.3473E+00	1.5736E-01	1.7884E-01	0.757E-01
RA-226		2.3729E+00	1.0210E+00	1.0325E+00	0.796E+00
Th-230	#B	7.4132E+00	1.3599E+01	1.3635E+01	0.823E+01
Th-234	B	-1.0031E+01	1.1182E+01	1.1234E+01	0.110E+01
Tl-208	F	7.6367E-01	1.0443E-01	1.1422E-01	0.385E-01
U-235	#B	-1.1734E-01	2.5457E-01	2.5469E-01	0.602E-01

- All peaks for activity calculation had bad shape.
* - Activity omitted from total
& - Activity omitted from total and all peaks had bad shape.
< - MDA value printed.
A - Activity printed, but activity < MDA.
B - Activity < MDA and failed test.
C - Area < Critical level.
F - Failed fraction or key line test.
H - Halflife limit exceeded

---------- S U M M A R Y ----------

Total Activity (39.2 to 2494.9 keV) 2.268E+01 pCi/g

Laboratory: New World Technology

ORTEC g v - i (3263) Wan32 G53W2.10 22-JAN-2009 20:37:04
New World Technology Spectrum name: 5N000131.An1

Sample description
Parcel D 70-PDT-119-04 344g
1/21/09 13:20

Acquisition information
Start time: 22-Jan-2009 19:51:50
Live time: 2700
Real time: 2704

- -

***** S U M M A R Y O F N U C L I D E S I N S A M P L E *****

Nuclide		Activity pCi/g	Time of Count Uncertainty Counting pCi/g	2 Sigma Total pCi/g	MDA pCi/g
Ac-228	F	1.0748E+00	2.9391E-01	3.0136E-01	0.166E+00
AM-241		1.7455E-01	1.4788E-01	1.4859E-01	0.118E+00
Bi-212	F	8.5512E-01	4.3632E-01	4.3948E-01	0.280E+00
BI-214	F	1.0461E+00	1.9042E-01	2.0073E-01	0.558E-01
CO-60	#B	1.6037E-02	1.0424E-02	1.0470E-02	0.632E-01
CS-137		9.3944E-02	5.3159E-02	5.3468E-02	0.328E-01
EU-152	F	2.1437E-01	1.3462E-01	1.3547E-01	0.880E-01
EU-154	F	2.4914E-01	1.3439E-01	1.3553E-01	0.836E-01
K-40		1.3534E+01	1.5938E+00	1.8023E+00	0.109E+00
Pa-234	F	1.8781E-01	1.9851E-01	1.9902E-01	0.120E+00
Pb-210		1.9485E+00	1.2258E+00	1.2347E+00	0.966E+00
Pb-212		1.1201E+00	1.4568E-01	1.6274E-01	0.756E-01
Pb-214	F	6.9720E-01	2.6087E-01	2.6455E-01	0.904E-01
RA-226	B	1.2484E-01	1.3258E+00	1.3258E+00	0.111E+01
Th-230	B	2.5950E-01	1.2181E+01	1.2181E+01	0.104E+02
Th-234		3.3610E+00	1.0848E+00	1.1429E+00	0.806E+00
Tl-208	F	3.9908E-01	8.0228E-02	8.3792E-02	0.391E-01
U-235	B	-1.7429E-02	2.8846E-02	2.8868E-02	0.689E-01

- All peaks for activity calculation had bad shape.
* - Activity omitted from total
& - Activity omitted from total and all peaks had bad shape.
< - MDA value printed.
A - Activity printed, but activity < MDA.
B - Activity < MDA and failed test.
C - Area < Critical level.
F - Failed fraction or key line test.
H - Halflife limit exceeded

---------- S U M M A R Y ----------

Total Activity (38.2 to 2445.9 keV) 2.452E+01 pCi/g

Laboratory: New World Technology

ORTEC g v - i (3263) Wan32 G53W2.10 23-JAN-2009 08:46:44
New World Technology Spectrum name: 5N000132.An1

Sample description
Parcel D 70-PDT-119-05 361g
1/21/09 13:17

Acquisition information
Start time: 22-Jan-2009 22:47:49
Live time: 5400
Real time: 5408

- -

***** S U M M A R Y O F N U C L I D E S I N S A M P L E *****

Nuclide		Time of Count Activity pCi/g	Uncertainty Counting pCi/g	2 Sigma Total pCi/g	MDA pCi/g
Ac-228	F	1.6525E+00	2.0817E-01	2.3197E-01	0.107E+00
AM-241	#B	-3.2631E-02	3.9491E-01	3.9492E-01	0.122E+00
Bi-212	F	1.1288E+00	3.4356E-01	3.5050E-01	0.216E+00
BI-214	F	1.3539E+00	1.7385E-01	1.9231E-01	0.606E-01
CO-60	#B	-1.3186E-03	8.1796E-02	8.1796E-02	0.780E-02
CS-137		6.8159E-02	4.0755E-02	4.0967E-02	0.289E-01
EU-152	F	8.2231E-02	8.9608E-02	8.9796E-02	0.767E-01
EU-154	F	1.8088E-01	8.8999E-02	8.9908E-02	0.623E-01
K-40		1.5622E+01	1.1818E+00	1.5298E+00	0.520E-01
Pa-234	F	2.7521E-01	1.7801E-01	1.7924E-01	0.102E+00
Pb-210	#	2.0157E+00	1.2264E+00	1.2359E+00	0.748E+00
Pb-212		1.8147E+00	1.2061E-01	1.6839E-01	0.576E-01
Pb-214		1.2356E+00	1.2984E-01	1.5143E-01	0.656E-01
RA-226	B	4.1419E-01	1.0616E+00	1.0619E+00	0.880E+00
Th-230	#B	-7.2477E+00	6.2488E+01	6.2495E+01	0.825E+01
Th-234		2.1133E+00	7.6864E-01	8.0122E-01	0.742E+00
Tl-208	F	5.5146E-01	7.4251E-02	8.1423E-02	0.318E-01
U-235	B	3.1572E-02	4.3691E-02	4.3738E-02	0.552E-01

- All peaks for activity calculation had bad shape.
* - Activity omitted from total
& - Activity omitted from total and all peaks had bad shape.
< - MDA value printed.
A - Activity printed, but activity < MDA.
B - Activity < MDA and failed test.
C - Area < Critical level.
F - Failed fraction or key line test.
H - Halflife limit exceeded

---------- S U M M A R Y ----------

Total Activity (38.2 to 2445.9 keV) 2.783E+01 pCi/g

Laboratory: New World Technology

ORTEC g v - i (3263) Wan32 G53W2.10 23-JAN-2009 07:35:31
New World Technology Spectrum name: 4N000113.An1

Sample description
Parcel D 70-PDT-119-06 339g
1/21/09 13:18

Acquisition information
Start time: 22-Jan-2009 22:47:35
Live time: 5400
Real time: 5406

- -

***** S U M M A R Y O F N U C L I D E S I N S A M P L E *****

Nuclide		Time of Count Activity pCi/g	Uncertainty Counting pCi/g	2 Sigma Total pCi/g	MDA pCi/g
Ac-228	F	9.4176E-01	2.9028E-01	2.9608E-01	0.181E+00
AM-241	#B	-5.2554E-03	1.4351E-01	1.4351E-01	0.104E+00
Bi-212	F	7.5861E-01	4.0034E-01	4.0304E-01	0.293E+00
BI-214	F	9.7398E-01	1.8336E-01	1.9266E-01	0.817E-01
CO-60	B	8.5000E-03	3.4473E-02	3.4477E-02	0.252E-01
CS-137	#B	-2.5446E-02	1.5795E-01	1.5795E-01	0.446E-01
EU-152	F	7.7123E-02	1.0231E-01	1.0245E-01	0.699E-01
EU-154	B	4.8107E-02	1.0070E-01	1.0076E-01	0.539E-01
K-40		1.8907E+01	1.4134E+00	1.8385E+00	0.236E+00
Pa-234	B	5.7207E-02	9.4444E-02	9.4545E-02	0.116E+00
Pb-210	#B	1.4565E-01	2.3159E+00	2.3159E+00	0.108E+01
Pb-212		1.3026E+00	1.3059E-01	1.5547E-01	0.804E-01
Pb-214		1.0601E+00	1.8159E-01	1.9351E-01	0.897E-01
RA-226		1.4513E+00	1.3374E+00	1.3407E+00	0.108E+01
Th-230	#B	4.8493E+00	7.8718E+00	7.8984E+00	0.651E+01
Th-234		3.3073E+00	8.5237E-01	9.2294E-01	0.844E+00
Tl-208	F	4.1505E-01	8.1002E-02	9.6678E-02	0.378E-01
U-235	B	-3.2979E-02	8.7019E-02	8.7045E-02	0.703E-01

- All peaks for activity calculation had bad shape.
* - Activity omitted from total
& - Activity omitted from total and all peaks had bad shape.
< - MDA value printed.
A - Activity printed, but activity < MDA.
B - Activity < MDA and failed test.
C - Area < Critical level.
F - Failed fraction or key line test.
H - Halflife limit exceeded

---------- S U M M A R Y ----------

Total Activity (41.9 to 3331.9 keV) 2.912E+01 pCi/g

Laboratory: New World Technology

ORTEC g v - i (3263) wan32 G53W2.06 22-JAN-2009 22:42:01
New World Technology Spectrum name: 6N000128.An1

Sample description
Parcel D 70-PDT-119-07 351g
1/21/09 13:21

Acquisition information
Start time: 22-Jan-2009 21:51:17
Live time: 2700
Real time: 2706

- -

***** S U M M A R Y O F N U C L I D E S I N S A M P L E *****

Nuclide		Activity pCi/g	Time of Count Uncertainty Counting pCi/g	2 Sigma Total pCi/g	MDA pCi/g
Ac-228	F	5.4865E-01	1.9458E-01	1.9565E-01	0.143E+00
AM-241	#A	-1.5260E-03	-1.1453E-01	-1.1453E-01	0.875E-01
Bi-212		5.6141E-01	3.3028E-01	3.3093E-01	0.228E+00
BI-214		5.1339E-01	1.3315E-01	1.3450E-01	0.839E-01
CO-60	#B	1.0848E-03	3.6391E-03	3.6393E-03	0.106E-01
CS-137	F	3.7376E-02	4.6814E-02	4.6835E-02	0.348E-01
EU-152	B	-1.3626E-03	-2.0646E-03	-2.0653E-03	0.100E+00
EU-154	F	1.1577E-01	8.1655E-02	8.1768E-02	0.615E-01
K-40		1.4905E+01	1.7206E+00	1.8072E+00	0.305E+00
Pa-234	F	2.0151E-01	1.0830E-01	1.0855E-01	0.110E+00
Pb-210	F	1.0394E+00	1.4216E+00	1.4222E+00	0.945E+00
Pb-212	F	6.7642E-01	1.2967E-01	1.3207E-01	0.824E-01
PB-214		5.6927E-01	1.9142E-01	1.9258E-01	0.101E+00
RA-226	B	8.2277E-01	1.2109E+00	1.2113E+00	0.987E+00
Th-230		1.7209E+01	1.5461E+01	1.5474E+01	0.968E+01
Th-234	F	1.3671E+00	6.7345E-01	6.7535E-01	0.975E+00
Tl-208	F	4.0219E-01	1.3367E-01	1.3450E-01	0.413E-01
U-235	#B	-1.1888E-01	-2.6778E-01	-2.6782E-01	0.682E-01

- All peaks for activity calculation had bad shape.
* - Activity omitted from total
& - Activity omitted from total and all peaks had bad shape.
< - MDA value printed.
A - Activity printed, but activity < MDA.
B - Activity < MDA and failed test.
C - Area < Critical level.
F - Failed fraction or key line test.
H - Halflife limit exceeded

---------- S U M M A R Y ----------

Total Activity (43.5 to 2782.0 keV) 3.5386173E+01 pCi/g

Laboratory: New World Technology

ORTEC g v - i (3263) Npp32 G53W3.10 22-JAN-2009 22:21:54
New World Technology Spectrum name: 1N000181.An1

Sample description
Parcel D 70-PDT-119-08 336g
1/21/09 13:30

Acquisition information
Start time: 22-Jan-2009 21:36:46
Live time: 2700
Real time: 2702

- -

***** S U M M A R Y O F N U C L I D E S I N S A M P L E *****

Nuclide		Activity pCi/g	Uncertainty Counting pCi/g	2 Sigma Total pCi/g	MDA pCi/g
Ac-228	F	6.2404E-01	1.8356E-01	1.8759E-01	0.201E+00
AM-241	#A	-8.4384E-02	5.1086E-01	5.1090E-01	0.699E-01
Bi-212	F	7.3204E-01	3.9142E-01	3.9401E-01	0.207E+00
BI-214	F	5.4952E-01	1.3703E-01	1.4105E-01	0.682E-01
CO-60	#F	4.0298E-02	2.6194E-02	2.6310E-02	0.965E-02
CS-137	#B	-4.5289E-02	3.4714E-01	3.4715E-01	0.281E-01
EU-152	C	7.9113E-02	8.8618E-02	8.8791E-02	0.529E-01
EU-154	C	5.0576E-02	5.5980E-02	5.6092E-02	0.345E-01
K-40		8.7683E+00	1.2641E+00	1.3767E+00	0.106E+00
Pa-234	#F	1.4400E-01	9.0937E-02	9.1592E-02	0.444E-01
Pb-210	#B	5.4200E-01	7.9964E-01	8.0072E-01	0.643E+00
Pb-212	F	5.0779E-01	1.1005E-01	1.1486E-01	0.739E-01
Pb-214		6.6513E-01	1.4307E-01	1.4909E-01	0.539E-01
RA-226	B	8.6244E-01	1.1163E+00	1.1176E+00	0.908E+00
Th-230	#B	4.6609E+00	8.5151E+00	8.5378E+00	0.637E+01
Th-234	#F	1.5899E+00	6.3477E-01	6.5710E-01	0.889E+00
Tl-208	F	2.8175E-01	7.5780E-02	7.7685E-02	0.413E-01
U-235	#B	-1.3893E-01	1.8901E-01	1.8923E-01	0.696E-01

- All peaks for activity calculation had bad shape.
* - Activity omitted from total
& - Activity omitted from total and all peaks had bad shape.
< - MDA value printed.
A - Activity printed, but activity < MDA.
B - Activity < MDA and failed test.
C - Area < Critical level.
F - Failed fraction or key line test.
H - Halflife limit exceeded

---------- S U M M A R Y ----------

Total Activity (39.3 to 2491.3 keV) 1.217E+01 pCi/g

Laboratory: New World Technology

ORTEC g v - i (3263) wan32 G53W2.06 23-JAN-2009 08:38:13
New World Technology Spectrum name: 6N000129.An1

Sample description
Parcel D 70-PDT-119-09 350g
1/21/09 13:35

Acquisition information
Start time: 22-Jan-2009 22:44:27
Live time: 2700
Real time: 2706

- -

***** S U M M A R Y O F N U C L I D E S I N S A M P L E *****

Nuclide		Time of Count Activity pCi/g	Uncertainty Counting pCi/g	2 Sigma Total pCi/g	MDA pCi/g
Ac-228	F	6.6983E-01	2.7420E-01	2.7532E-01	0.169E+00
AM-241	#A	-3.1715E-02	-3.2538E-01	-3.2539E-01	0.101E+00
Bi-212	F	6.8391E-01	3.3227E-01	3.3324E-01	0.214E+00
BI-214		6.4964E-01	1.8661E-01	1.8816E-01	0.866E-01
CO-60	#B	5.1883E-04	3.1201E-03	3.1202E-03	0.874E-02
CS-137	F	4.0878E-02	5.1037E-02	5.1060E-02	0.382E-01
EU-152	#F	1.2061E-01	7.2664E-02	7.2801E-02	0.102E+00
EU-154	F	1.7045E-01	1.0044E-01	1.0064E-01	0.654E-01
K-40		1.1280E+01	1.5787E+00	1.6332E+00	0.612E+00
Pa-234	#F	2.9179E-01	1.5280E-01	1.5319E-01	0.115E+00
Pb-210	#	2.1106E+00	1.5253E+00	1.5273E+00	0.962E+00
Pb-212	F	6.6523E-01	1.3568E-01	1.3791E-01	0.880E-01
PB-214	F	5.8760E-01	1.8895E-01	1.9021E-01	0.117E+00
RA-226	#B	-1.1687E-01	-1.9148E+00	-1.9148E+00	0.105E+01
Th-230	#B	5.1751E+00	9.6556E+00	9.6575E+00	0.751E+01
Th-234	#F	1.5831E+00	5.6756E-01	5.7057E-01	0.105E+01
Tl-208	F	5.0237E-01	1.4786E-01	1.4903E-01	0.414E-01
U-235	B	3.2020E-03	3.3893E-03	3.3914E-03	0.681E-01

- All peaks for activity calculation had bad shape.
* - Activity omitted from total
& - Activity omitted from total and all peaks had bad shape.
< - MDA value printed.
A - Activity printed, but activity < MDA.
B - Activity < MDA and failed test.
C - Area < Critical level.
F - Failed fraction or key line test.
H - Halflife limit exceeded

---------- S U M M A R Y ----------

Total Activity (43.5 to 2782.0 keV) 1.7441027E+01 pCi/g

Laboratory: New World Technology

ORTEC g v - i (3263) Wan32 G53W2.10 23-JAN-2009 09:45:03
New World Technology Spectrum name: 5N000133.An1

Sample description
Parcel D 70-PDT-119-10 363g
1/21/09 13:40

Acquisition information
Start time: 23-Jan-2009 08:48:17
Live time: 2700
Real time: 2703

- -

***** S U M M A R Y O F N U C L I D E S I N S A M P L E *****

Nuclide		Time of Count Activity pCi/g	Uncertainty Counting pCi/g	2 Sigma Total pCi/g	MDA pCi/g
Ac-228	F	5.4346E-01	2.2340E-01	2.2593E-01	0.160E+00
AM-241	#B	-5.2768E-02	9.1429E-01	9.1430E-01	0.113E+00
Bi-212	F	6.2413E-01	3.7613E-01	3.7808E-01	0.251E+00
BI-214	F	6.2209E-01	2.8590E-01	2.8839E-01	0.853E-01
CO-60	#B	4.7486E-03	1.6321E-01	1.6321E-01	0.501E-01
CS-137	B	4.9126E-03	4.5645E-02	4.5646E-02	0.371E-01
EU-152	F	1.8381E-01	1.0847E-01	1.0924E-01	0.105E+00
EU-154	F	1.2817E-01	5.7255E-02	5.7964E-02	0.657E-01
K-40		1.5669E+01	1.6692E+00	1.9328E+00	0.104E+00
Pa-234	F	3.3054E-01	1.9829E-01	1.9988E-01	0.127E+00
Pb-210	#F	2.1079E+00	2.7005E+00	2.7052E+00	0.106E+01
Pb-212	F	6.3191E-01	1.2009E-01	1.2687E-01	0.756E-01
Pb-214		4.8080E-01	1.7660E-01	1.7918E-01	0.910E-01
RA-226	B	1.1535E-01	1.2817E+00	1.2818E+00	0.108E+01
Th-230	#B	-1.4214E+00	1.6233E+01	1.6234E+01	0.104E+02
Th-234	F	1.3979E+00	1.1319E+00	1.1417E+00	0.863E+00
Tl-208	F	1.7672E-01	7.2233E-02	7.3023E-02	0.506E-01
U-235	B	2.1409E-03	1.2092E-02	1.2092E-02	0.667E-01

- All peaks for activity calculation had bad shape.
* - Activity omitted from total
& - Activity omitted from total and all peaks had bad shape.
< - MDA value printed.
A - Activity printed, but activity < MDA.
B - Activity < MDA and failed test.
C - Area < Critical level.
F - Failed fraction or key line test.
H - Halflife limit exceeded

---------- S U M M A R Y ----------

Total Activity (38.2 to 2445.9 keV) 1.908E+01 pCi/g

Laboratory: New World Technology

ORTEC g v - i (3263) Wan32 G53W2.10 27-JAN-2009 09:01:23
New World Technology Spectrum name: 3N000198.An1

Sample description
Parcel D 70-PDT-119-11 325g
1/23/09 09:20

Acquisition information
Start time: 27-Jan-2009 08:16:13
Live time: 2700
Real time: 2702

- -

***** S U M M A R Y O F N U C L I D E S I N S A M P L E *****

Nuclide		Time of Count Activity pCi/g	Uncertainty Counting pCi/g	2 Sigma Total pCi/g	MDA pCi/g
Ac-228	B	9.8369E-02	6.7849E-02	6.8122E-02	0.227E+00
AM-241	#B	-6.7078E-02	3.2977E+00	3.2977E+00	0.534E-01
Bi-212	F	8.4544E-01	5.0087E-01	5.0356E-01	0.285E+00
BI-214	F	4.5376E-01	3.0050E-01	3.0176E-01	0.781E-01
CO-60	#B	1.3022E-02	5.4139E-02	5.4145E-02	0.247E-01
CS-137	B	1.9817E-02	4.1172E-02	4.1190E-02	0.381E-01
EU-152	F	8.1915E-02	5.1808E-02	5.2129E-02	0.697E-01
EU-154	F	1.0705E-01	1.1798E-01	1.1822E-01	0.604E-01
K-40	#	3.8945E+00	1.6232E+00	1.6411E+00	0.416E+00
Pa-234	B	2.9749E-02	7.2221E-02	7.2256E-02	0.126E+00
Pb-210	#B	-2.6355E+00	4.3729E+00	4.3776E+00	0.114E+01
Pb-212	F	2.3536E-01	1.0611E-01	1.0720E-01	0.831E-01
PB-214	F	1.6396E-01	1.6908E-01	1.6939E-01	0.101E+00
RA-226	B	2.8172E-01	1.1042E+00	1.1044E+00	0.919E+00
Th-230	#B	-3.5428E+00	2.8867E+01	2.8871E+01	0.349E+01
Th-234	B	-1.3451E+01	7.1955E+01	7.1970E+01	0.160E+01
Tl-208	F	1.9873E-01	7.2794E-02	7.3783E-02	0.287E-01
U-235	B	-1.6205E-01	3.6447E-01	3.6462E-01	0.686E-01

- All peaks for activity calculation had bad shape.
* - Activity omitted from total
& - Activity omitted from total and all peaks had bad shape.
< - MDA value printed.
A - Activity printed, but activity < MDA.
B - Activity < MDA and failed test.
C - Area < Critical level.
F - Failed fraction or key line test.
H - Halflife limit exceeded

---------- S U M M A R Y ----------

Total Activity (39.2 to 2494.9 keV) 5.628E+00 pCi/g

Laboratory: New World Technology

ORTEC g v - i (3263) wan32 G53W2.06 27-JAN-2009 14:38:56
New World Technology Spectrum name: 6N000141.An1

Sample description
Parcel D 70-PDT-119-12 326g
1/23/09 09:23

Acquisition information
Start time: 27-Jan-2009 13:18:26
Live time: 2700
Real time: 2705

- -

***** S U M M A R Y O F N U C L I D E S I N S A M P L E *****

Nuclide		Time of Count Activity pCi/g	Uncertainty Counting pCi/g	2 Sigma Total pCi/g	MDA pCi/g
Ac-228	B	9.7878E-02	6.0350E-02	6.0459E-02	0.194E+00
AM-241		1.4844E-01	1.4066E-01	1.4076E-01	0.932E-01
Bi-212	F	3.2484E-01	3.7914E-01	3.7933E-01	0.299E+00
BI-214		2.6339E-01	1.4469E-01	1.4502E-01	0.748E-01
CO-60	#B	7.5823E-04	3.8567E-03	3.8568E-03	0.125E-01
CS-137	B	4.7019E-03	3.6169E-02	3.6170E-02	0.293E-01
EU-152	#B	5.5403E-02	5.1368E-02	5.1409E-02	0.830E-01
EU-154	F	4.8267E-02	5.4603E-02	5.4632E-02	0.475E-01
K-40		5.9126E+00	1.1626E+00	1.1831E+00	0.294E+00
Pa-234	#F	3.0323E-01	1.4312E-01	1.4356E-01	0.119E+00
Pb-210	B	5.0813E-01	9.7962E-01	9.7980E-01	0.826E+00
Pb-212	F	1.8049E-01	1.0082E-01	1.0104E-01	0.795E-01
PB-214	F	2.7999E-01	1.4313E-01	1.4351E-01	0.102E+00
RA-226	B	1.1939E-01	1.0473E+00	1.0473E+00	0.886E+00
Th-230	#F	1.0303E+01	1.3224E+01	1.3230E+01	0.877E+01
Th-234	#F	1.3070E+00	5.2417E-01	5.2639E-01	0.973E+00
Tl-208	F	1.6013E-01	9.0584E-02	9.0778E-02	0.444E-01
U-235	#B	-1.3498E-01	-2.8697E-01	-2.8701E-01	0.687E-01

- All peaks for activity calculation had bad shape.
* - Activity omitted from total
& - Activity omitted from total and all peaks had bad shape.
< - MDA value printed.
A - Activity printed, but activity < MDA.
B - Activity < MDA and failed test.
C - Area < Critical level.
F - Failed fraction or key line test.
H - Halflife limit exceeded

---------- S U M M A R Y ----------

Total Activity (43.5 to 2782.0 keV) 6.9682941E+00 pCi/g

Laboratory: New World Technology

ORTEC g v - i (3263) Wan32 G53W2.10 27-JAN-2009 09:13:00
New World Technology Spectrum name: 5N000145.An1

Sample description
Parcel D 70-PDT-119-13 330g
1/23/09 09:28

Acquisition information
Start time: 27-Jan-2009 08:19:56
Live time: 2700
Real time: 2703

- -

***** S U M M A R Y O F N U C L I D E S I N S A M P L E *****

Nuclide		Time of Count Activity pCi/g	Uncertainty Counting pCi/g	2 Sigma Total pCi/g	MDA pCi/g
Ac-228	F	8.4520E-01	2.6418E-01	2.6932E-01	0.182E+00
AM-241	#B	-4.5241E-02	5.3543E-01	5.3544E-01	0.121E+00
Bi-212	B	1.8595E-01	4.8631E-01	4.8644E-01	0.396E+00
BI-214	F	8.0182E-01	1.8905E-01	1.9522E-01	0.620E-01
CO-60	#B	-3.6574E-03	3.2599E-01	3.2599E-01	0.502E-01
CS-137	F	3.7899E-02	5.0521E-02	5.0574E-02	0.372E-01
EU-152	B	7.2066E-02	2.3513E-01	2.3519E-01	0.975E-01
EU-154	B	7.7569E-02	1.1141E-01	1.1154E-01	0.847E-01
K-40		1.0786E+01	1.4528E+00	1.6002E+00	0.114E+00
Pa-234	B	9.5780E-02	1.6617E-01	1.6633E-01	0.134E+00
Pb-210		1.2275E+00	1.2139E+00	1.2175E+00	0.988E+00
Pb-212	F	9.2558E-01	1.3536E-01	1.4803E-01	0.717E-01
Pb-214		7.3607E-01	1.6815E-01	1.7444E-01	0.725E-01
RA-226	B	8.0127E-01	1.3906E+00	1.3916E+00	0.114E+01
Th-230	#B	-1.0803E+01	4.3212E+02	4.3212E+02	0.847E+01
Th-234	F	1.0812E+00	9.4613E-01	9.5318E-01	0.944E+00
Tl-208	F	3.5415E-01	9.5823E-02	9.8196E-02	0.444E-01
U-235	#B	-6.2047E-02	1.7208E-01	1.7213E-01	0.732E-01

- All peaks for activity calculation had bad shape.
* - Activity omitted from total
& - Activity omitted from total and all peaks had bad shape.
< - MDA value printed.
A - Activity printed, but activity < MDA.
B - Activity < MDA and failed test.
C - Area < Critical level.
F - Failed fraction or key line test.
H - Halflife limit exceeded

---------- S U M M A R Y ----------

Total Activity (38.2 to 2445.9 keV) 1.568E+01 pCi/g

Laboratory: New World Technology

ORTEC g v - i (3263) Npp32 G53W3.10 27-JAN-2009 15:27:28
New World Technology Spectrum name: 1N000207.An1

Sample description
Parcel D 70-PDT-119-14 334g
1/23/09 09:32

Acquisition information
Start time: 27-Jan-2009 14:08:44
Live time: 2700
Real time: 2702

- -

***** S U M M A R Y O F N U C L I D E S I N S A M P L E *****

Nuclide		Time of Count Activity pCi/g	Uncertainty 2 Sigma Counting pCi/g	Total pCi/g	MDA pCi/g
Ac-228	B	9.8528E-02	6.4362E-02	6.4652E-02	0.202E+00
AM-241	#A	-6.6586E-02	3.3960E-01	3.3965E-01	0.669E-01
Bi-212	B	3.4637E-02	2.2511E-01	2.2512E-01	0.180E+00
BI-214	F	2.9697E-01	8.9784E-02	9.1583E-02	0.240E-01
CO-60	#F	1.1073E-02	1.4051E-02	1.4067E-02	0.945E-02
CS-137	#B	-3.5543E-02	2.2162E-01	2.2163E-01	0.292E-01
EU-152	C	5.2481E-02	4.5831E-02	4.5978E-02	0.471E-01
EU-154	A	1.9084E-02	3.3662E-02	3.3688E-02	0.298E-01
K-40	#	3.2299E+00	7.5886E-01	7.8500E-01	0.103E+00
Pa-234	#F	6.3758E-02	7.6365E-02	7.6519E-02	0.504E-01
Pb-210	#	1.1841E+00	1.0036E+00	1.0077E+00	0.626E+00
Pb-212	F	2.5600E-01	7.5966E-02	7.7754E-02	0.505E-01
Pb-214	F	3.7249E-01	7.8764E-02	8.2192E-02	0.981E-02
RA-226	B	3.3332E-01	9.4739E-01	9.4763E-01	0.797E+00
Th-230		6.4870E+00	5.6831E+00	5.7485E+00	0.422E+01
Th-234	F	8.9984E-01	4.1725E-01	4.2818E-01	0.622E+00
Tl-208	F	6.8723E-02	4.7681E-02	4.7863E-02	0.371E-01
U-235	B	-1.3604E-01	1.6725E-01	1.6748E-01	0.656E-01

- All peaks for activity calculation had bad shape.
* - Activity omitted from total
& - Activity omitted from total and all peaks had bad shape.
< - MDA value printed.
A - Activity printed, but activity < MDA.
B - Activity < MDA and failed test.
C - Area < Critical level.
F - Failed fraction or key line test.
H - Halflife limit exceeded

---------- S U M M A R Y ----------

Total Activity (39.4 to 2490.9 keV) 1.190E+01 pCi/g

Laboratory: New World Technology

ORTEC g v - i (3263) Npp32 G53W3.10 27-JAN-2009 10:01:36
New World Technology Spectrum name: 1N000202.An1

Sample description
Parcel D 70-PDT-119-15 317g
1/23/09 09:36

Acquisition information
Start time: 27-Jan-2009 08:56:59
Live time: 2700
Real time: 2704

- -

***** S U M M A R Y O F N U C L I D E S I N S A M P L E *****

Nuclide		Time of Count Activity pCi/g	Uncertainty Counting pCi/g	2 Sigma Total pCi/g	MDA pCi/g
Ac-228	B	-6.8200E-02	5.3890E-02	5.4056E-02	0.198E+00
AM-241	#A	-4.9736E-02	1.6245E-01	1.6250E-01	0.600E-01
Bi-212	F	3.8140E-01	2.7775E-01	2.7874E-01	0.164E+00
BI-214	F	2.8305E-01	7.9691E-02	8.1530E-02	0.130E-01
CO-60	#B	5.5557E-04	9.9677E-03	9.9677E-03	0.996E-02
CS-137	#B	-2.3745E-02	9.7556E-02	9.7567E-02	0.342E-01
EU-152	A	1.7092E-02	5.6075E-02	5.6087E-02	0.406E-01
EU-154	A	1.6162E-02	3.5376E-02	3.5394E-02	0.316E-01
K-40	#F	1.1571E+00	4.6791E-01	4.7341E-01	0.109E+00
Pa-234	F	5.0811E-02	5.5652E-02	5.5786E-02	0.393E-01
Pb-210	#B	-2.7295E-01	1.8236E+00	1.8237E+00	0.691E+00
Pb-212	B	4.2662E-02	6.8294E-02	6.8350E-02	0.646E-01
Pb-214	F	9.2147E-02	7.5279E-02	7.5503E-02	0.534E-01
RA-226	B	3.5330E-01	8.5085E-01	8.5116E-01	0.721E+00
Th-230	#B	2.8920E+00	5.0990E+00	5.1136E+00	0.348E+01
Th-234	F	1.1546E+00	4.8395E-01	4.9942E-01	0.659E+00
Tl-208	#B	7.8223E-03	1.5382E-02	1.5390E-02	0.389E-01
U-235	#B	-1.9924E-01	2.7841E-01	2.7871E-01	0.667E-01

- All peaks for activity calculation had bad shape.
* - Activity omitted from total
& - Activity omitted from total and all peaks had bad shape.
< - MDA value printed.
A - Activity printed, but activity < MDA.
B - Activity < MDA and failed test.
C - Area < Critical level.
F - Failed fraction or key line test.
H - Halflife limit exceeded

---------- S U M M A R Y ----------

Total Activity (39.4 to 2490.9 keV) 1.914E+00 pCi/g

Laboratory: New World Technology

ORTEC g v - i (3263) Wan32 G53W2.10 27-JAN-2009 22:14:55
New World Technology Spectrum name: 3N000203.An1

Sample description
Parcel D 70-PDT-119-16 340g
1/23/09 09:41

Acquisition information
Start time: 27-Jan-2009 17:24:54
Live time: 2700
Real time: 2703

- -

***** S U M M A R Y O F N U C L I D E S I N S A M P L E *****

Nuclide		Time of Count Activity pCi/g	Uncertainty 2 Sigma Counting pCi/g	Total pCi/g	MDA pCi/g
Ac-228	F	4.5655E-01	1.5812E-01	1.6063E-01	0.216E+00
AM-241	#B	-3.1857E-02	3.4624E-01	3.4625E-01	0.970E-01
Bi-212	F	5.2896E-01	4.1358E-01	4.1485E-01	0.314E+00
BI-214	F	6.1090E-01	1.6357E-01	1.6773E-01	0.646E-01
CO-60	#B	7.0691E-03	1.6592E-01	1.6592E-01	0.534E-01
CS-137	#B	-7.6841E-03	6.9543E-02	6.9544E-02	0.473E-01
EU-152	B	8.0477E-02	1.0923E-01	1.0938E-01	0.101E+00
EU-154	F	1.5612E-01	1.0028E-01	1.0088E-01	0.634E-01
K-40		1.4513E+01	1.8318E+00	2.0421E+00	0.291E+00
Pa-234	F	1.7880E-01	1.9194E-01	1.9242E-01	0.110E+00
Pb-210	#B	-1.4210E+00	2.7940E+00	2.7961E+00	0.129E+01
Pb-212		4.7085E-01	1.1629E-01	1.2022E-01	0.817E-01
PB-214	F	3.0949E-01	1.7599E-01	1.7707E-01	0.114E+00
RA-226	F	9.8817E-01	1.1337E+00	1.1355E+00	0.907E+00
Th-230	F	9.0184E+00	9.6546E+00	9.7294E+00	0.767E+01
Th-234	B	-1.2358E+01	2.0909E+01	2.0950E+01	0.152E+01
Tl-208	F	2.4921E-01	8.4144E-02	8.5488E-02	0.349E-01
U-235	B	-1.5017E-01	4.2700E-01	4.2711E-01	0.780E-01

- All peaks for activity calculation had bad shape.
* - Activity omitted from total
& - Activity omitted from total and all peaks had bad shape.
< - MDA value printed.
A - Activity printed, but activity < MDA.
B - Activity < MDA and failed test.
C - Area < Critical level.
F - Failed fraction or key line test.
H - Halflife limit exceeded

---------- S U M M A R Y ----------

Total Activity (39.2 to 2494.9 keV) 1.729E+01 pCi/g

Laboratory: New World Technology

ORTEC g v - i (3263) Wan32 G53W2.10 27-JAN-2009 11:23:26
New World Technology Spectrum name: 3N000199.An1

Sample description
Parcel D 70-PDT-119-17 331g
1/23/09 09:46

Acquisition information
Start time: 27-Jan-2009 10:17:26
Live time: 2700
Real time: 2702

- -

***** S U M M A R Y O F N U C L I D E S I N S A M P L E *****

Nuclide		Time of Count Activity pCi/g	Uncertainty Counting pCi/g	2 Sigma Total pCi/g	MDA pCi/g
Ac-228	#B	-2.1692E-01	1.7205E+00	1.7206E+00	0.229E+00
AM-241	#B	-4.6710E-02	7.3558E-01	7.3559E-01	0.101E+00
Bi-212	#B	-2.2578E-01	1.3999E+00	1.4000E+00	0.262E+00
BI-214	F	2.6943E-01	1.2097E-01	1.2207E-01	0.621E-01
CO-60	#B	-2.7183E-03	2.6706E-02	2.6706E-02	0.111E-01
CS-137	B	1.4616E-02	4.3754E-02	4.3763E-02	0.405E-01
EU-152	B	2.9081E-02	1.2327E-01	1.2329E-01	0.934E-01
EU-154	F	5.2307E-02	9.5700E-02	9.5771E-02	0.505E-01
K-40	#	3.0026E+00	1.4358E+00	1.4479E+00	0.372E+00
Pa-234	B	2.0862E-03	5.3436E-03	5.3459E-03	0.786E-01
Pb-210	#B	-2.3814E+00	3.6469E+00	3.6514E+00	0.102E+01
Pb-212	B	2.2020E-02	2.2434E-02	2.2480E-02	0.784E-01
PB-214	B	-3.6160E-02	3.6870E-02	3.6940E-02	0.111E+00
RA-226	B	8.2199E-02	1.1076E+00	1.1076E+00	0.909E+00
Th-230	#B	-3.1386E+00	4.1877E+02	4.1877E+02	0.893E+01
Th-234	#B	-1.2943E+01	2.0641E+01	2.0687E+01	0.147E+01
Tl-208	#F	2.8437E-01	9.6723E-02	9.8246E-02	0.407E-01
U-235	#B	-1.3385E-01	2.2902E-01	2.2918E-01	0.648E-01

- All peaks for activity calculation had bad shape.
* - Activity omitted from total
& - Activity omitted from total and all peaks had bad shape.
< - MDA value printed.
A - Activity printed, but activity < MDA.
B - Activity < MDA and failed test.
C - Area < Critical level.
F - Failed fraction or key line test.
H - Halflife limit exceeded

---------- S U M M A R Y ----------

Total Activity (39.2 to 2494.9 keV) 3.556E+00 pCi/g

Laboratory: New World Technology

ORTEC g v - i (3263) wan32 G53W2.06 27-JAN-2009 20:35:34
New World Technology Spectrum name: 6N000146.An1

Sample description
Parcel D 70-PDT-119-18 329g
1/23/09 09:50

Acquisition information
Start time: 27-Jan-2009 19:29:20
Live time: 2700
Real time: 2706

- -

***** S U M M A R Y O F N U C L I D E S I N S A M P L E *****

Nuclide		Time of Count Activity pCi/g	Uncertainty 2 Sigma Counting pCi/g	Total pCi/g	MDA pCi/g
Ac-228	#B	1.4284E-03	7.6825E-04	7.7007E-04	0.158E+00
AM-241	#A	-3.4685E-02	-2.9950E-01	-2.9951E-01	0.913E-01
Bi-212	B	1.8318E-01	2.9913E-01	2.9921E-01	0.240E+00
BI-214		2.0131E-01	1.0189E-01	1.0216E-01	0.578E-01
CO-60	#B	2.4052E-03	1.2996E-02	1.2996E-02	0.134E-01
CS-137		3.0064E-02	2.7698E-02	2.7721E-02	0.169E-01
EU-152	#B	5.4352E-02	3.2744E-02	3.2806E-02	0.912E-01
EU-154	F	6.7261E-02	6.1649E-02	6.1699E-02	0.595E-01
K-40		6.1176E+00	1.0745E+00	1.0982E+00	0.177E+00
Pa-234	F	2.9525E-01	1.3547E-01	1.3591E-01	0.957E-01
Pb-210	B	9.8831E-02	1.0188E+00	1.0188E+00	0.787E+00
Pb-212	B	1.4975E-02	8.0512E-02	8.0514E-02	0.713E-01
PB-214	F	2.5660E-01	1.4076E-01	1.4108E-01	0.928E-01
RA-226	#B	-1.9186E-01	-2.0750E+00	-2.0751E+00	0.904E+00
Th-230	#B	-2.8863E+00	1.5191E+04	1.5191E+04	0.655E+01
Th-234	F	1.1721E+00	5.1834E-01	5.2015E-01	0.987E+00
Tl-208	#F	2.3995E-01	1.0907E-01	1.0943E-01	0.440E-01
U-235	#B	-1.4005E-01	-2.6491E-01	-2.6496E-01	0.619E-01

- All peaks for activity calculation had bad shape.
* - Activity omitted from total
& - Activity omitted from total and all peaks had bad shape.
< - MDA value printed.
A - Activity printed, but activity < MDA.
B - Activity < MDA and failed test.
C - Area < Critical level.
F - Failed fraction or key line test.
H - Halflife limit exceeded

---------- S U M M A R Y ----------

Total Activity (43.5 to 2782.0 keV) 7.1408124E+00 pCi/g

Laboratory: New World Technology

ORTEC g v - i (3263) Npp32 G53W3.10 27-JAN-2009 10:58:20
New World Technology Spectrum name: 1N000203.An1

Sample description
Parcel D 70-PDT-119-19 327g
1/23/09 09:55

Acquisition information
Start time: 27-Jan-2009 10:13:12
Live time: 2700
Real time: 2702

- -

***** S U M M A R Y O F N U C L I D E S I N S A M P L E *****

Nuclide		Time of Count Activity pCi/g	Uncertainty 2 Sigma Counting pCi/g	Total pCi/g	MDA pCi/g
Ac-228	F	3.3957E-01	1.5561E-01	1.5703E-01	0.222E+00
AM-241	#A	-9.5792E-04	1.3785E-01	1.3785E-01	0.930E-01
Bi-212	F	4.2800E-01	3.3806E-01	3.3908E-01	0.223E+00
BI-214	F	4.8766E-01	1.1951E-01	1.2314E-01	0.371E-01
CO-60	#F	7.3454E-02	3.5154E-02	3.5440E-02	0.965E-02
CS-137	#B	-4.2518E-02	3.4501E-02	3.4501E-02	0.270E-01
EU-152	C	8.5890E-02	7.8841E-02	7.9071E-02	0.545E-01
EU-154	C	4.1693E-02	4.6246E-02	4.6338E-02	0.406E-01
K-40		1.0407E+01	1.4715E+00	1.6075E+00	0.249E+00
Pa-234	#F	9.7921E-02	7.4021E-02	7.4393E-02	0.465E-01
Pb-210		1.3235E+00	9.3898E-01	9.4447E-01	0.656E+00
Pb-212	F	4.1384E-01	1.0019E-01	1.0371E-01	0.695E-01
Pb-214		4.5180E-01	1.3371E-01	1.3671E-01	0.551E-01
RA-226	B	6.8756E-01	1.0399E+00	1.0408E+00	0.854E+00
Th-230	#B	-4.5469E-01	2.7580E+00	2.7587E+00	0.203E+01
Th-234	F	1.3233E+00	5.9337E-01	6.0998E-01	0.739E+00
Tl-208	#F	1.1774E-01	8.6192E-02	8.6488E-02	0.508E-01
U-235	B	-3.9780E-02	2.7729E-02	2.7847E-02	0.710E-01

- All peaks for activity calculation had bad shape.
* - Activity omitted from total
& - Activity omitted from total and all peaks had bad shape.
< - MDA value printed.
A - Activity printed, but activity < MDA.
B - Activity < MDA and failed test.
C - Area < Critical level.
F - Failed fraction or key line test.
H - Halflife limit exceeded

---------- S U M M A R Y ----------

Total Activity (39.4 to 2490.9 keV) 1.370E+01 pCi/g

Laboratory: New World Technology

ORTEC g v - i (3263) Npp32 G53W3.10 27-JAN-2009 20:28:52
New World Technology Spectrum name: 1N000212.An1

Sample description
Parcel D 70-PDT-119-20 325g
1/23/09 10:01

Acquisition information
Start time: 27-Jan-2009 19:38:51
Live time: 2700
Real time: 2701

- -

***** S U M M A R Y O F N U C L I D E S I N S A M P L E *****

Nuclide		Time of Count Activity pCi/g	Uncertainty 2 Sigma Counting pCi/g	Total pCi/g	MDA pCi/g
Ac-228	B	-2.9544E-01	2.0096E-01	2.0180E-01	0.206E+00
AM-241	#A	-3.5661E-02	1.6876E-01	1.6878E-01	0.699E-01
Bi-212	F	3.3976E-01	2.8524E-01	2.8600E-01	0.182E+00
BI-214	#F	2.4810E-01	8.7123E-02	8.8421E-02	0.312E-01
CO-60	#F	3.6390E-02	2.5010E-02	2.5110E-02	0.971E-02
CS-137	#B	-2.1752E-02	9.4014E-02	9.4023E-02	0.345E-01
EU-152	C	9.0168E-02	8.5578E-02	8.5811E-02	0.583E-01
EU-154		5.7661E-02	4.7127E-02	4.7299E-02	0.347E-01
K-40	#	4.2321E+00	8.8025E-01	9.1875E-01	0.106E+00
Pa-234	#F	2.3101E-01	1.0832E-01	1.0973E-01	0.616E-01
Pb-210	#F	8.3344E-01	8.9203E-01	8.9433E-01	0.607E+00
Pb-212	F	1.9997E-01	8.1932E-02	8.2949E-02	0.600E-01
Pb-214		2.9466E-01	1.0350E-01	1.0516E-01	0.465E-01
RA-226	B	1.2932E-01	9.4537E-01	9.4540E-01	0.809E+00
Th-230	#F	4.8269E+00	6.6605E+00	6.6915E+00	0.431E+01
Th-234	F	1.4328E+00	5.0377E-01	5.2651E-01	0.689E+00
Tl-208	F	1.0211E-01	4.5508E-02	4.5928E-02	0.348E-01
U-235	B	-1.6405E-01	2.0467E-01	2.0494E-01	0.662E-01

- All peaks for activity calculation had bad shape.
* - Activity omitted from total
& - Activity omitted from total and all peaks had bad shape.
< - MDA value printed.
A - Activity printed, but activity < MDA.
B - Activity < MDA and failed test.
C - Area < Critical level.
F - Failed fraction or key line test.
H - Halflife limit exceeded

---------- S U M M A R Y ----------

Total Activity (39.4 to 2490.9 keV) 5.684E+00 pCi/g

Laboratory: New World Technology

ORTEC g v - i (3263) Wan32 G53W2.10 27-JAN-2009 11:06:09
New World Technology Spectrum name: 2N000151.An1

Sample description
Parcel D 70-PDT-119-21 348g
1/23/09 10:07

Acquisition information
Start time: 27-Jan-2009 10:12:32
Live time: 2700
Real time: 2704

- -

***** S U M M A R Y O F N U C L I D E S I N S A M P L E *****

Nuclide		Time of Count Activity pCi/g	Uncertainty 2 Sigma Counting pCi/g	Total pCi/g	MDA pCi/g
Ac-228	F	6.1370E-01	2.1202E-01	2.1540E-01	0.237E+00
AM-241	#B	-5.4761E-02	1.1534E+00	1.1534E+00	0.780E+00
Bi-212	F	6.3755E-01	4.3947E-01	4.4121E-01	0.323E+00
BI-214	F	8.9852E-01	1.7489E-01	1.8320E-01	0.645E-01
CO-60	#B	-1.8567E-03	1.8050E-02	1.8051E-02	0.405E-01
CS-137	B	3.1822E-02	6.4700E-02	6.4729E-02	0.552E-01
EU-152	F	2.8840E-01	1.2587E-01	1.2750E-01	0.152E+00
EU-154	F	1.3212E-01	8.9221E-02	8.9706E-02	0.110E+00
K-40		1.0699E+01	1.4965E+00	1.6377E+00	0.122E+00
Pa-234	#B	-1.1825E-01	8.7155E-01	8.7160E-01	0.253E+00
Pb-210	#F	0.0000E+00	4.8387E+00	4.8390E+00	0.000E+00
Pb-212	F	7.9545E-01	1.5888E-01	1.6702E-01	0.111E+00
PB-214	F	7.1722E-01	2.2003E-01	2.2464E-01	0.130E+00
RA-226	B	9.3025E-01	1.6295E+00	1.6306E+00	0.133E+01
Th-230	#B	-4.3899E-01	1.1154E+02	1.1154E+02	0.470E+02
Th-234	#B	-1.0115E+02	2.6655E+02	2.6677E+02	0.108E+02
Tl-208	F	3.5416E-01	9.0017E-02	1.0065E-01	0.369E-01
U-235	B	-1.0549E-01	2.0710E-01	2.0721E-01	0.927E-01

- All peaks for activity calculation had bad shape.
* - Activity omitted from total
& - Activity omitted from total and all peaks had bad shape.
< - MDA value printed.
A - Activity printed, but activity < MDA.
B - Activity < MDA and failed test.
C - Area < Critical level.
F - Failed fraction or key line test.
H - Halflife limit exceeded

---------- S U M M A R Y ----------

Total Activity (43.2 to 2752.7 keV) 1.410E+01 pCi/g

Laboratory: New World Technology

ORTEC g v - i (3263) Npp32 G53W3.10 27-JAN-2009 22:53:35
New World Technology Spectrum name: 1N000214.An1

Sample description
Parcel D 70-PDT-119-22 327g
1/23/09 10:11

Acquisition information
Start time: 27-Jan-2009 22:06:31
Live time: 2700
Real time: 2702

- -

***** S U M M A R Y O F N U C L I D E S I N S A M P L E *****

Nuclide		Activity Time of Count pCi/g	Uncertainty Counting pCi/g	2 Sigma Total pCi/g	MDA pCi/g
Ac-228	B	-6.5312E-01	3.9552E+00	3.9554E+00	0.244E+00
AM-241	#A	-9.9942E-02	1.1337E+00	1.1338E+00	0.578E-01
Bi-212	F	3.7256E-01	2.5046E-01	2.5151E-01	0.136E+00
BI-214	#F	3.5999E-01	1.0816E-01	1.1035E-01	0.340E-01
CO-60	#B	6.9282E-03	1.0910E-02	1.0918E-02	0.128E-01
CS-137	#B	-2.6464E-03	3.3360E-02	3.3360E-02	0.312E-01
EU-152	#A	2.1702E-02	4.0618E-02	4.0647E-02	0.611E-01
EU-154	C	6.2808E-02	4.7001E-02	4.7206E-02	0.382E-01
K-40		4.3151E+00	9.5991E-01	9.9672E-01	0.208E+00
Pa-234	#F	1.8041E-01	1.3071E-01	1.3143E-01	0.458E-01
Pb-210		9.4539E-01	7.9864E-01	8.0194E-01	0.575E+00
Pb-212	F	3.4712E-01	9.1753E-02	9.4466E-02	0.571E-01
Pb-214		2.2683E-01	9.3070E-02	9.4163E-02	0.569E-01
RA-226	B	2.6188E-01	9.3484E-01	9.3499E-01	0.792E+00
Th-230	B	6.6907E-02	4.3890E+00	4.3890E+00	0.362E+01
Th-234	#F	1.6069E+00	5.3973E-01	5.6637E-01	0.649E+00
Tl-208	#F	9.8998E-02	5.8861E-02	5.9167E-02	0.405E-01
U-235	B	-1.9718E-01	3.3582E-01	3.3606E-01	0.693E-01

- All peaks for activity calculation had bad shape.
* - Activity omitted from total
& - Activity omitted from total and all peaks had bad shape.
< - MDA value printed.
A - Activity printed, but activity < MDA.
B - Activity < MDA and failed test.
C - Area < Critical level.
F - Failed fraction or key line test.
H - Halflife limit exceeded

---------- S U M M A R Y ----------

Total Activity (39.4 to 2490.9 keV) 6.666E+00 pCi/g

Laboratory: New World Technology

ORTEC g v - i (3263) wan32 G53W2.06 27-JAN-2009 13:13:30
New World Technology Spectrum name: 6N000140.An1

Sample description
Parcel D 70-PDT-119-23 330g
1/23/09 10:17

Acquisition information
Start time: 27-Jan-2009 10:56:19
Live time: 2700
Real time: 2705

- -

***** S U M M A R Y O F N U C L I D E S I N S A M P L E *****

Nuclide		Time of Count Activity pCi/g	Uncertainty 2 Sigma Counting pCi/g	Total pCi/g	MDA pCi/g
Ac-228	F	4.9246E-01	2.2807E-01	2.2880E-01	0.189E+00
AM-241	#A	-6.0712E-03	-1.4023E-01	-1.4023E-01	0.930E-01
Bi-212	#B	7.6334E-02	2.6762E-01	2.6764E-01	0.233E+00
BI-214		5.9653E-01	1.7392E-01	1.7532E-01	0.766E-01
CO-60	#F	5.4615E-02	4.9041E-02	4.9083E-02	0.232E-01
CS-137		8.5165E-02	5.1431E-02	5.1528E-02	0.334E-01
EU-152	#B	-9.6990E-03	-7.3154E-03	-7.3242E-03	0.842E-01
EU-154	F	1.3461E-01	9.3232E-02	9.3364E-02	0.678E-01
K-40		1.0986E+01	1.4313E+00	1.4882E+00	0.176E+00
Pa-234	F	2.4567E-01	1.4336E-01	1.4364E-01	0.109E+00
Pb-210	F	1.0399E+00	1.3792E+00	1.3797E+00	0.948E+00
Pb-212	F	4.7922E-01	1.1859E-01	1.1991E-01	0.817E-01
PB-214		4.3012E-01	1.6839E-01	1.6914E-01	0.103E+00
RA-226	B	6.2327E-01	1.3030E+00	1.3032E+00	0.107E+01
Th-230	#B	4.3963E+00	9.8802E+00	9.8815E+00	0.789E+01
Th-234	F	1.2716E+00	4.8376E-01	4.8604E-01	0.110E+01
Tl-208	F	3.2675E-01	1.2514E-01	1.2572E-01	0.439E-01
U-235	#B	-1.1918E-01	-2.7446E-01	-2.7450E-01	0.756E-01

- All peaks for activity calculation had bad shape.
* - Activity omitted from total
& - Activity omitted from total and all peaks had bad shape.
< - MDA value printed.
A - Activity printed, but activity < MDA.
B - Activity < MDA and failed test.
C - Area < Critical level.
F - Failed fraction or key line test.
H - Halflife limit exceeded

---------- S U M M A R Y ----------

Total Activity (43.5 to 2782.0 keV) 1.2958157E+01 pCi/g

Laboratory: New World Technology

ORTEC g v - i (3263) Wan32 G53W2.10 27-JAN-2009 18:44:58
New World Technology Spectrum name: 3N000202.An1

Sample description
Parcel D 70-PDT-119-24 327g
1/23/09 10:22

Acquisition information
Start time: 27-Jan-2009 16:04:42
Live time: 2700
Real time: 2703

- -

***** S U M M A R Y O F N U C L I D E S I N S A M P L E *****

Nuclide		Time of Count Activity pCi/g	Uncertainty Counting pCi/g	2 Sigma Total pCi/g	MDA pCi/g
Ac-228	F	5.1659E-01	2.0636E-01	2.0883E-01	0.224E+00
AM-241	F	9.5552E-02	1.2045E-01	1.2071E-01	0.823E-01
Bi-212	#B	-1.5218E-01	1.4259E+00	1.4259E+00	0.287E+00
BI-214	#F	4.8854E-01	2.4320E-01	2.4501E-01	0.819E-01
CO-60	#B	8.9233E-04	1.6925E-01	1.6925E-01	0.546E-01
CS-137	#B	-4.9506E-02	1.9802E+00	1.9802E+00	0.431E-01
EU-152	B	8.3789E-02	1.0433E-01	1.0449E-01	0.939E-01
EU-154	F	7.1751E-02	8.7603E-02	8.7749E-02	0.655E-01
K-40		1.0329E+01	1.4777E+00	1.6112E+00	0.123E+00
Pa-234	#B	5.8385E-02	6.5319E-02	6.5470E-02	0.119E+00
Pb-210	#B	-1.7196E+00	3.1835E+00	3.1862E+00	0.115E+01
Pb-212	F	3.6073E-01	1.1192E-01	1.1434E-01	0.816E-01
PB-214	F	3.8585E-01	1.6185E-01	1.6367E-01	0.103E+00
RA-226	B	7.0534E-01	1.1056E+00	1.1066E+00	0.898E+00
Th-230	#	1.6565E+01	1.4138E+01	1.4310E+01	0.836E+01
Th-234	#B	-1.1980E+01	1.6096E+01	1.6147E+01	0.156E+01
Tl-208	F	2.0468E-01	7.0673E-02	7.1753E-02	0.277E-01
U-235	#B	-1.5961E-01	6.7720E-01	6.7728E-01	0.761E-01

- All peaks for activity calculation had bad shape.
* - Activity omitted from total
& - Activity omitted from total and all peaks had bad shape.
< - MDA value printed.
A - Activity printed, but activity < MDA.
B - Activity < MDA and failed test.
C - Area < Critical level.
F - Failed fraction or key line test.
H - Halflife limit exceeded

---------- S U M M A R Y ----------

Total Activity (39.2 to 2494.9 keV) 2.885E+01 pCi/g

Laboratory: New World Technology

ORTEC g v - i (3263) Npp32 G53W3.10 27-JAN-2009 11:55:54
New World Technology Spectrum name: 1N000204.An1

Sample description
Parcel D 70-PDT-119-25 342g
1/23/09 10:30

Acquisition information
Start time: 27-Jan-2009 11:10:46
Live time: 2700
Real time: 2702

- -

***** S U M M A R Y O F N U C L I D E S I N S A M P L E *****

Nuclide		Activity pCi/g	Time of Count Uncertainty Counting pCi/g	2 Sigma Total pCi/g	MDA pCi/g
Ac-228	F	2.3583E-01	1.1200E-01	1.1295E-01	0.190E+00
AM-241	#A	-9.4069E-02	1.6231E+00	1.6231E+00	0.756E-01
Bi-212	#F	6.6474E-01	4.8746E-01	4.8917E-01	0.205E+00
BI-214	#F	3.9734E-01	1.4585E-01	1.4784E-01	0.616E-01
CO-60	#F	2.6659E-02	2.0961E-02	2.1024E-02	0.923E-02
CS-137	#B	-1.7163E-02	6.6624E-02	6.6632E-02	0.311E-01
EU-152	C	6.4194E-02	6.1685E-02	6.1849E-02	0.527E-01
EU-154	A	3.6643E-02	5.6381E-02	5.6440E-02	0.440E-01
K-40		8.3154E+00	1.2019E+00	1.3084E+00	0.101E+00
Pa-234	F	8.3854E-02	9.3587E-02	9.3803E-02	0.682E-01
Pb-210		1.4176E+00	9.0926E-01	9.1576E-01	0.604E+00
Pb-212	F	2.9649E-01	8.7023E-02	8.9116E-02	0.630E-01
Pb-214		4.1790E-01	1.1461E-01	1.1760E-01	0.597E-01
RA-226	B	2.9507E-01	9.5398E-01	9.5417E-01	0.803E+00
Th-230	#F	5.4704E+00	6.5513E+00	6.5918E+00	0.445E+01
Th-234	F	1.8316E+00	6.4266E-01	6.7179E-01	0.646E+00
Tl-208	F	1.0919E-01	5.1605E-02	5.2029E-02	0.358E-01
U-235	B	-1.6201E-01	2.2682E-01	2.2706E-01	0.655E-01

- All peaks for activity calculation had bad shape.
* - Activity omitted from total
& - Activity omitted from total and all peaks had bad shape.
< - MDA value printed.
A - Activity printed, but activity < MDA.
B - Activity < MDA and failed test.
C - Area < Critical level.
F - Failed fraction or key line test.
H - Halflife limit exceeded

---------- S U M M A R Y ----------

Total Activity (39.4 to 2490.9 keV) 1.165E+01 pCi/g

Laboratory: New World Technology

ORTEC g v - i (3263) Npp32 G53W3.10 27-JAN-2009 17:15:33
New World Technology Spectrum name: 1N000209.An1

Sample description
Parcel D 70-PDT-119-26 318g
1/23/09 10:32

Acquisition information
Start time: 27-Jan-2009 16:21:44
Live time: 2700
Real time: 2702

- -

***** S U M M A R Y O F N U C L I D E S I N S A M P L E *****

Nuclide		Time of Count Activity pCi/g	Uncertainty 2 Sigma Counting pCi/g	Total pCi/g	MDA pCi/g
Ac-228	B	1.5579E-01	1.0583E-01	1.0627E-01	0.197E+00
AM-241	#A	-7.9130E-02	4.1031E-01	4.1037E-01	0.676E-01
Bi-212	F	5.1859E-01	3.2858E-01	3.3013E-01	0.196E+00
BI-214	F	3.2635E-01	1.2107E-01	1.2268E-01	0.563E-01
CO-60	#B	-1.1502E-03	4.6010E-02	4.6010E-02	0.993E-02
CS-137	#B	-2.2704E-03	4.2179E-02	4.2179E-02	0.372E-01
EU-152	A	4.2632E-02	7.5137E-02	7.5196E-02	0.570E-01
EU-154		5.9521E-02	5.2126E-02	5.2292E-02	0.399E-01
K-40	#	5.0249E+00	9.6947E-01	1.0186E+00	0.109E+00
Pa-234	#F	1.2204E-01	7.8607E-02	7.9151E-02	0.441E-01
Pb-210		9.3819E-01	7.1769E-01	7.2130E-01	0.526E+00
Pb-212	F	2.6583E-01	8.8356E-02	9.0017E-02	0.617E-01
Pb-214	F	3.1082E-01	1.2088E-01	1.2246E-01	0.556E-01
RA-226	B	1.3250E-02	9.1330E-01	9.1330E-01	0.792E+00
Th-230	#B	2.8254E-01	3.4457E+00	3.4459E+00	0.296E+01
Th-234	F	2.0418E+00	6.7255E-01	7.0704E-01	0.680E+00
Tl-208	F	7.9082E-02	5.0001E-02	5.0231E-02	0.388E-01
U-235	#B	-1.6614E-01	1.8279E-01	1.8311E-01	0.644E-01

- All peaks for activity calculation had bad shape.
* - Activity omitted from total
& - Activity omitted from total and all peaks had bad shape.
< - MDA value printed.
A - Activity printed, but activity < MDA.
B - Activity < MDA and failed test.
C - Area < Critical level.
F - Failed fraction or key line test.
H - Halflife limit exceeded

---------- S U M M A R Y ----------

Total Activity (39.4 to 2490.9 keV) 7.464E+00 pCi/g

Laboratory: New World Technology

ORTEC g v - i (3263) Wan32 G53W2.10 27-JAN-2009 12:46:37
New World Technology Spectrum name: 2N000152.An1

Sample description
Parcel D 70-PDT-119-27 314g
1/23/09 10:35

Acquisition information
Start time: 27-Jan-2009 11:13:59
Live time: 2700
Real time: 2703

- -

***** S U M M A R Y O F N U C L I D E S I N S A M P L E *****

Nuclide		Time of Count Activity pCi/g	Uncertainty 2 Sigma Counting pCi/g	Total pCi/g	MDA pCi/g
Ac-228	B	-5.0282E-02	9.8815E-02	9.8864E-02	0.224E+00
AM-241	#B	-1.1256E-01	1.0428E+00	1.0428E+00	0.676E+00
Bi-212	B	2.2682E-01	7.3573E-01	7.3586E-01	0.359E+00
BI-214	F	4.1558E-01	1.6244E-01	1.6439E-01	0.650E-01
CO-60	#B	1.1542E-02	1.0335E-01	1.0335E-01	0.367E-01
CS-137	F	5.0965E-02	5.1840E-02	5.1933E-02	0.435E-01
EU-152	B	7.4053E-02	1.7754E-01	1.7762E-01	0.144E+00
EU-154	F	1.3347E-01	1.3340E-01	1.3373E-01	0.890E-01
K-40		7.8613E+00	1.3509E+00	1.4366E+00	0.135E+00
Pa-234	#B	-1.0827E-01	9.6498E-02	9.6850E-02	0.242E+00
Pb-210	#F	0.0000E+00	4.5943E+00	4.5948E+00	0.000E+00
Pb-212	B	5.4966E-02	1.2546E-01	1.2551E-01	0.107E+00
PB-214	B	2.4878E-02	3.0642E-02	3.0682E-02	0.131E+00
RA-226	B	2.7413E-01	1.2676E+00	1.2677E+00	0.107E+01
Th-230	#B	-1.8305E+01	4.2973E+02	4.2973E+02	0.169E+02
Th-234	#B	-1.1345E+02	7.2307E+02	7.2317E+02	0.120E+02
Tl-208	F	3.1248E-01	1.1402E-01	1.2075E-01	0.282E-01
U-235	#B	-2.5864E-01	8.5857E-01	8.5874E-01	0.907E-01

- All peaks for activity calculation had bad shape.
* - Activity omitted from total
& - Activity omitted from total and all peaks had bad shape.
< - MDA value printed.
A - Activity printed, but activity < MDA.
B - Activity < MDA and failed test.
C - Area < Critical level.
F - Failed fraction or key line test.
H - Halflife limit exceeded

---------- S U M M A R Y ----------

Total Activity (43.2 to 2752.7 keV) 8.589E+00 pCi/g

Laboratory: New World Technology

ORTEC g v - i (3263) Npp32 G53W3.10 27-JAN-2009 18:30:38
New World Technology Spectrum name: 1N000210.An1

Sample description
Parcel D 70-PDT-119-28 334g
1/23/09 10:38

Acquisition information
Start time: 27-Jan-2009 17:18:52
Live time: 2700
Real time: 2702

- -

***** S U M M A R Y O F N U C L I D E S I N S A M P L E *****

Nuclide		Time of Count Activity pCi/g	Uncertainty 2 Sigma Counting pCi/g	Total pCi/g	MDA pCi/g
Ac-228	F	1.0835E+00	2.9030E-01	2.9798E-01	0.310E+00
AM-241	#A	-5.9084E-02	2.5381E-01	2.5385E-01	0.702E-01
Bi-212	F	9.6870E-01	4.7476E-01	4.7850E-01	0.280E+00
BI-214	F	1.2828E+00	2.5445E-01	2.6615E-01	0.899E-01
CO-60	#F	2.2555E-02	1.5881E-02	1.5941E-02	0.122E-01
CS-137	#B	-2.4976E-02	9.0029E-02	9.0042E-02	0.297E-01
EU-152	C	2.0222E-01	1.5359E-01	1.5424E-01	0.713E-01
EU-154	C	1.2083E-01	8.4753E-02	8.5173E-02	0.540E-01
K-40		5.9166E+00	1.1555E+00	1.2127E+00	0.249E+00
Pa-234	#F	3.1007E-01	1.1977E-01	1.2206E-01	0.911E-01
Pb-210		1.5588E+00	9.3539E-01	9.4302E-01	0.721E+00
Pb-212	F	1.5095E+00	1.6207E-01	1.8927E-01	0.839E-01
Pb-214		9.8815E-01	1.6618E-01	1.7748E-01	0.821E-01
RA-226	B	9.9172E-01	1.3991E+00	1.4005E+00	0.114E+01
Th-230	#F	7.0774E+00	9.0686E+00	9.1176E+00	0.628E+01
Th-234		2.1106E+00	1.0713E+00	1.0948E+00	0.827E+00
Tl-208	F	4.8434E-01	1.0052E-01	1.0473E-01	0.499E-01
U-235	B	-2.9563E-02	5.0880E-02	5.0916E-02	0.779E-01

- All peaks for activity calculation had bad shape.
* - Activity omitted from total
& - Activity omitted from total and all peaks had bad shape.
< - MDA value printed.
A - Activity printed, but activity < MDA.
B - Activity < MDA and failed test.
C - Area < Critical level.
F - Failed fraction or key line test.
H - Halflife limit exceeded

---------- S U M M A R Y ----------

Total Activity (39.4 to 2490.9 keV) 1.621E+01 pCi/g

Laboratory: New World Technology

ORTEC g v - i (3263) Wan32 G53W2.10 27-JAN-2009 12:47:11
New World Technology Spectrum name: 3N000200.An1

Sample description
Parcel D 70-PDT-119-29 332g
1/23/09 10:41

Acquisition information
Start time: 27-Jan-2009 11:29:37
Live time: 2700
Real time: 2702

- -

***** S U M M A R Y O F N U C L I D E S I N S A M P L E *****

Nuclide		Time of Count Activity pCi/g	Uncertainty 2 Sigma Counting pCi/g	Total pCi/g	MDA pCi/g
Ac-228	F	5.6441E-01	2.3090E-01	2.3353E-01	0.181E+00
AM-241	#B	4.0294E-02	1.3733E-01	1.3737E-01	0.966E-01
Bi-212	F	6.1609E-01	3.9999E-01	4.0178E-01	0.291E+00
BI-214	#F	4.9107E-01	2.1503E-01	2.1709E-01	0.955E-01
CO-60	#B	1.0263E-02	1.1006E-02	1.1024E-02	0.111E-01
CS-137	#B	-2.6418E-02	1.1862E-01	1.1863E-01	0.398E-01
EU-152	B	4.3914E-02	2.3055E-01	2.3057E-01	0.725E-01
EU-154	F	1.2412E-01	8.3511E-02	8.3969E-02	0.662E-01
K-40		8.8744E+00	1.3594E+00	1.4672E+00	0.121E+00
Pa-234	#B	1.0491E-01	1.3231E-01	1.3255E-01	0.132E+00
Pb-210	#B	-2.9481E+00	1.3781E+01	1.3782E+01	0.129E+01
Pb-212	F	4.5283E-01	1.2251E-01	1.2597E-01	0.902E-01
PB-214	F	3.8808E-01	1.4169E-01	1.4379E-01	0.106E+00
RA-226	B	1.6336E-01	1.2991E+00	1.2992E+00	0.108E+01
Th-230	#B	-2.5222E+00	4.9608E+01	4.9609E+01	0.355E+01
Th-234	B	-1.2451E+01	2.1728E+01	2.1768E+01	0.153E+01
Tl-208	F	3.1351E-01	8.8677E-02	9.0689E-02	0.304E-01
U-235	B	-1.3859E-01	3.2437E-01	3.2450E-01	0.763E-01

- All peaks for activity calculation had bad shape.
* - Activity omitted from total
& - Activity omitted from total and all peaks had bad shape.
< - MDA value printed.
A - Activity printed, but activity < MDA.
B - Activity < MDA and failed test.
C - Area < Critical level.
F - Failed fraction or key line test.
H - Halflife limit exceeded

---------- S U M M A R Y ----------

Total Activity (39.2 to 2494.9 keV) 1.170E+01 pCi/g

Laboratory: New World Technology

ORTEC g v - i (3263) Npp32 G53W3.10 27-JAN-2009 19:29:55
New World Technology Spectrum name: 1N000211.An1

Sample description
Parcel D 70-PDT-119-30 327g
1/23/09 10:44

Acquisition information
Start time: 27-Jan-2009 18:43:16
Live time: 2700
Real time: 2701

- -

***** S U M M A R Y O F N U C L I D E S I N S A M P L E *****

Nuclide		Time of Count Activity pCi/g	Uncertainty Counting pCi/g	2 Sigma Total pCi/g	MDA pCi/g
Ac-228	B	2.1212E-02	1.2631E-02	1.2699E-02	0.215E+00
AM-241	#A	-1.0122E-01	8.5414E-01	8.5418E-01	0.508E-01
Bi-212	F	6.8973E-01	2.8989E-01	2.9299E-01	0.109E+00
BI-214	#F	3.7498E-01	1.0535E-01	1.0779E-01	0.358E-01
CO-60	#B	-1.1186E-03	4.4743E-02	4.4743E-02	0.965E-02
CS-137	#B	-4.1258E-02	4.5502E-01	4.5503E-01	0.276E-01
EU-152	A	5.8265E-02	1.1802E-01	1.1809E-01	0.664E-01
EU-154	C	3.5613E-02	3.8723E-02	3.8803E-02	0.350E-01
K-40		4.0338E+00	9.8145E-01	1.0130E+00	0.238E+00
Pa-234	F	8.5003E-02	9.3155E-02	9.3378E-02	0.706E-01
Pb-210	#F	5.9424E-01	6.2142E-01	6.2310E-01	0.495E+00
Pb-212	F	2.8603E-01	8.5096E-02	8.7089E-02	0.548E-01
Pb-214	F	3.1648E-01	1.0143E-01	1.0338E-01	0.477E-01
RA-226	B	3.0572E-01	9.6063E-01	9.6083E-01	0.810E+00
Th-230	#	7.9097E+00	6.6451E+00	6.7282E+00	0.437E+01
Th-234	F	1.5729E+00	7.0825E-01	7.2791E-01	0.607E+00
Tl-208	F	1.2735E-01	6.9689E-02	7.0116E-02	0.457E-01
U-235	#B	-1.9370E-01	3.1456E-01	3.1481E-01	0.686E-01

- All peaks for activity calculation had bad shape.
* - Activity omitted from total
& - Activity omitted from total and all peaks had bad shape.
< - MDA value printed.
A - Activity printed, but activity < MDA.
B - Activity < MDA and failed test.
C - Area < Critical level.
F - Failed fraction or key line test.
H - Halflife limit exceeded

---------- S U M M A R Y ----------

Total Activity (39.4 to 2490.9 keV) 1.531E+01 pCi/g

Laboratory: New World Technology

ORTEC g v - i (3263) Npp32 G53W3.10 27-JAN-2009 12:54:33
New World Technology Spectrum name: 1N000205.An1

Sample description
Parcel D 70-PDT-119-31 331g
1/23/09 10:47

Acquisition information
Start time: 27-Jan-2009 12:04:51
Live time: 2700
Real time: 2702

- -

***** S U M M A R Y O F N U C L I D E S I N S A M P L E *****

Nuclide		Time of Count Activity pCi/g	Uncertainty 2 Sigma Counting pCi/g	Total pCi/g	MDA pCi/g
Ac-228	F	6.0751E-01	2.2533E-01	2.2846E-01	0.228E+00
AM-241	#A	-2.2081E-03	1.0696E-01	1.0696E-01	0.784E-01
Bi-212	F	4.3252E-01	3.2554E-01	3.2662E-01	0.210E+00
BI-214	F	5.3024E-01	1.3953E-01	1.4321E-01	0.510E-01
CO-60	F	3.7216E-02	3.1317E-02	3.1400E-02	0.163E-01
CS-137	B	1.0976E-02	3.8676E-02	3.8682E-02	0.357E-01
EU-152	C	1.1348E-01	9.8083E-02	9.8404E-02	0.795E-01
EU-154	C	5.4771E-02	6.1621E-02	6.1740E-02	0.505E-01
K-40		2.6044E+00	7.8955E-01	8.0599E-01	0.328E+00
Pa-234	F	2.1955E-01	1.0298E-01	1.0432E-01	0.721E-01
Pb-210		1.8798E+00	1.1631E+00	1.1720E+00	0.700E+00
Pb-212	F	6.8280E-01	1.1067E-01	1.1918E-01	0.606E-01
Pb-214		5.3652E-01	1.4238E-01	1.4635E-01	0.642E-01
RA-226	B	8.7289E-02	9.5472E-01	9.5473E-01	0.817E+00
Th-230	#B	3.5143E+00	6.5403E+00	6.5571E+00	0.483E+01
Th-234	F	1.8763E+00	7.2556E-01	7.5274E-01	0.715E+00
Tl-208	F	2.3014E-01	7.2306E-02	7.3643E-02	0.416E-01
U-235	#B	-8.7532E-02	6.0723E-02	6.0985E-02	0.698E-01

- All peaks for activity calculation had bad shape.
* - Activity omitted from total
& - Activity omitted from total and all peaks had bad shape.
< - MDA value printed.
A - Activity printed, but activity < MDA.
B - Activity < MDA and failed test.
C - Area < Critical level.
F - Failed fraction or key line test.
H - Halflife limit exceeded

---------- S U M M A R Y ----------

Total Activity (39.4 to 2490.9 keV) 7.761E+00 pCi/g

Laboratory: New World Technology

ORTEC g v - i (3263) Wan32 G53W2.10 27-JAN-2009 21:04:36
New World Technology Spectrum name: 3N000204.An1

Sample description
Parcel D 70-PDT-119-32 326g
1/23/09 10:51

Acquisition information
Start time: 27-Jan-2009 18:49:32
Live time: 2700
Real time: 2703

- -

***** S U M M A R Y O F N U C L I D E S I N S A M P L E *****

Nuclide		Time of Count Activity pCi/g	Uncertainty 2 Sigma Counting pCi/g	Total pCi/g	MDA pCi/g
Ac-228	F	3.2469E-01	2.1636E-01	2.1729E-01	0.205E+00
AM-241	#F	1.1469E-01	1.8151E-01	1.8176E-01	0.111E+00
Bi-212	B	-3.0753E-01	1.2301E+01	1.2301E+01	0.459E+00
BI-214	F	6.1190E-01	1.5863E-01	1.6292E-01	0.569E-01
CO-60	#F	6.6481E-02	3.6234E-02	3.6462E-02	0.113E-01
CS-137	#B	-4.9658E-02	1.9863E+00	1.9863E+00	0.458E-01
EU-152	B	5.7649E-02	2.1239E-01	2.1243E-01	0.690E-01
EU-154	F	7.1050E-02	8.7001E-02	8.7146E-02	0.631E-01
K-40	#	5.2258E+00	1.7471E+00	1.7771E+00	0.431E+00
Pa-234	F	2.2991E-01	1.5640E-01	1.5738E-01	0.924E-01
Pb-210	#B	-2.9998E+00	5.7981E+00	5.8026E+00	0.113E+01
Pb-212		4.9647E-01	1.1896E-01	1.2323E-01	0.794E-01
PB-214	F	3.4896E-01	1.9483E-01	1.9607E-01	0.106E+00
RA-226	B	2.6386E-01	1.0931E+00	1.0932E+00	0.911E+00
Th-230	#B	1.1238E+00	6.8322E+00	6.8338E+00	0.574E+01
Th-234	#B	-1.3334E+01	7.0496E+01	7.0510E+01	0.163E+01
Tl-208	F	2.1259E-01	7.3315E-02	7.4438E-02	0.421E-01
U-235	#B	-1.9660E-01	1.0284E+00	1.0284E+00	0.763E-01

- All peaks for activity calculation had bad shape.
* - Activity omitted from total
& - Activity omitted from total and all peaks had bad shape.
< - MDA value printed.
A - Activity printed, but activity < MDA.
B - Activity < MDA and failed test.
C - Area < Critical level.
F - Failed fraction or key line test.
H - Halflife limit exceeded

---------- S U M M A R Y ----------

Total Activity (39.2 to 2494.9 keV) 7.192E+00 pCi/g

Laboratory: New World Technology

ORTEC g v - i (3263) Wan32 G53W2.10 27-JAN-2009 14:55:53
New World Technology Spectrum name: 2N000153.An1

Sample description
Parcel D 70-PDT-119-33 325g
1/23/09 10:56

Acquisition information
Start time: 27-Jan-2009 13:00:24
Live time: 2700
Real time: 2704

- -

***** S U M M A R Y O F N U C L I D E S I N S A M P L E *****

Nuclide		Time of Count Activity pCi/g	Uncertainty Counting pCi/g	2 Sigma Total pCi/g	MDA pCi/g
Ac-228	B	2.0175E-01	1.9726E-01	1.9765E-01	0.239E+00
AM-241	#B	-2.4057E-01	1.9108E+00	1.9109E+00	0.858E+00
Bi-212	F	4.7950E-01	3.8656E-01	3.8768E-01	0.299E+00
BI-214	F	8.2623E-01	2.1761E-01	2.2332E-01	0.804E-01
CO-60	#B	-2.6846E-03	1.9677E-02	1.9678E-02	0.676E-01
CS-137	F	5.2217E-02	5.4017E-02	5.4111E-02	0.448E-01
EU-152	B	1.3577E-01	3.3217E-01	3.3231E-01	0.152E+00
EU-154	F	1.0725E-01	1.0901E-01	1.0927E-01	0.892E-01
K-40		1.9626E+01	2.0968E+00	2.4261E+00	0.130E+00
Pa-234	B	-2.0518E-03	1.5476E-03	1.5554E-03	0.207E+00
Pb-210	#F	0.0000E+00	3.0259E+00	3.0272E+00	0.000E+00
Pb-212	F	5.7420E-01	1.4780E-01	1.5240E-01	0.100E+00
PB-214	F	5.3077E-01	1.4903E-01	1.5274E-01	0.110E+00
RA-226	B	1.2770E+00	1.6384E+00	1.6405E+00	0.131E+01
Th-230	#B	-3.8266E+00	5.3983E+01	5.3986E+01	0.262E+02
Th-234	#B	-1.0243E+02	1.3255E+02	1.3300E+02	0.114E+02
Tl-208	F	2.0153E-01	9.0608E-02	9.4162E-02	0.310E-01
U-235	#B	-1.0095E-01	2.0689E-01	2.0700E-01	0.101E+00

- All peaks for activity calculation had bad shape.
* - Activity omitted from total
& - Activity omitted from total and all peaks had bad shape.
< - MDA value printed.
A - Activity printed, but activity < MDA.
B - Activity < MDA and failed test.
C - Area < Critical level.
F - Failed fraction or key line test.
H - Halflife limit exceeded

---------- S U M M A R Y ----------

Total Activity (43.2 to 2752.7 keV) 2.224E+01 pCi/g

Laboratory: New World Technology

ORTEC g v - i (3263) Npp32 G53W3.10 27-JAN-2009 22:04:39
New World Technology Spectrum name: 1N000213.An1

Sample description
Parcel D 70-PDT-119-34 334g
1/23/09 11:00

Acquisition information
Start time: 27-Jan-2009 21:07:09
Live time: 2700
Real time: 2702

- -

***** S U M M A R Y O F N U C L I D E S I N S A M P L E *****

Nuclide		Activity pCi/g	Time of Count Uncertainty Counting pCi/g	2 Sigma Total pCi/g	MDA pCi/g
Ac-228	F	6.5621E-01	1.9152E-01	1.9580E-01	0.194E+00
AM-241	#A	-7.7840E-02	4.1052E-01	4.1057E-01	0.651E-01
Bi-212	F	9.1371E-01	3.2841E-01	3.3319E-01	0.120E+00
BI-214	#F	7.3264E-01	1.5083E-01	1.5728E-01	0.466E-01
CO-60	#F	1.5129E-02	1.6224E-02	1.6251E-02	0.945E-02
CS-137	#B	-3.7436E-03	3.8882E-02	3.8883E-02	0.331E-01
EU-152	A	6.1882E-02	8.6438E-02	8.6547E-02	0.675E-01
EU-154	C	8.3428E-02	6.2378E-02	6.2650E-02	0.370E-01
K-40	#	3.6740E+00	8.0917E-01	8.4081E-01	0.103E+00
Pa-234	F	7.0759E-02	8.3126E-02	8.3299E-02	0.629E-01
Pb-210	B	2.8541E-01	8.5300E-01	8.5328E-01	0.722E+00
Pb-212	F	8.0525E-01	1.1149E-01	1.2308E-01	0.633E-01
Pb-214		4.7826E-01	1.1649E-01	1.2033E-01	0.615E-01
RA-226	B	1.6680E-01	1.1613E+00	1.1613E+00	0.978E+00
Th-230	#B	8.8795E-01	5.0387E+00	5.0401E+00	0.409E+01
Th-234	F	2.3454E+00	8.4868E-01	8.8490E-01	0.738E+00
Tl-208	#F	1.9001E-01	7.9627E-02	8.0457E-02	0.449E-01
U-235	#B	-1.0316E-01	1.3819E-01	1.3835E-01	0.682E-01

- All peaks for activity calculation had bad shape.
* - Activity omitted from total
& - Activity omitted from total and all peaks had bad shape.
< - MDA value printed.
A - Activity printed, but activity < MDA.
B - Activity < MDA and failed test.
C - Area < Critical level.
F - Failed fraction or key line test.
H - Halflife limit exceeded

---------- S U M M A R Y ----------

Total Activity (39.4 to 2490.9 keV) 9.795E+00 pCi/g

Laboratory: New World Technology

ORTEC g v - i (3263) Npp32 G53W3.10 27-JAN-2009 13:53:14
New World Technology Spectrum name: 1N000206.An1

Sample description
Parcel D 70-PDT-119-35 344g
1/23/09 11:04

Acquisition information
Start time: 27-Jan-2009 13:04:06
Live time: 2700
Real time: 2703

- -

***** S U M M A R Y O F N U C L I D E S I N S A M P L E *****

Nuclide		Activity pCi/g	Time of Count Uncertainty Counting pCi/g	2 Sigma Total pCi/g	MDA pCi/g
Ac-228	F	1.3498E+00	2.7918E-01	2.9147E-01	0.192E+00
AM-241	#A	-1.0168E-01	5.4587E+00	5.4587E+00	0.527E-01
Bi-212	F	1.1997E+00	4.9709E-01	5.0255E-01	0.284E+00
BI-214	F	9.3226E-01	1.6498E-01	1.7445E-01	0.519E-01
CO-60	#F	3.8318E-02	2.4907E-02	2.5017E-02	0.918E-02
CS-137	#B	-3.8807E-02	1.5992E+00	1.5992E+00	0.369E-01
EU-152	C	1.4253E-01	9.3796E-02	9.4326E-02	0.868E-01
EU-154	A	3.8340E-02	5.7282E-02	5.7344E-02	0.465E-01
K-40		2.5748E+00	9.2082E-01	9.3463E-01	0.525E+00
Pa-234	F	1.5933E-01	1.5430E-01	1.5478E-01	0.939E-01
Pb-210	F	1.1811E+00	1.1483E+00	1.1519E+00	0.774E+00
Pb-212	F	1.4306E+00	1.4562E-01	1.7260E-01	0.663E-01
Pb-214		1.0011E+00	1.7461E-01	1.8567E-01	0.637E-01
RA-226	B	5.3389E-01	1.1992E+00	1.1997E+00	0.991E+00
Th-230	#B	4.6296E+00	9.1535E+00	9.1743E+00	0.633E+01
Th-234		2.1852E+00	8.4540E-01	8.7704E-01	0.765E+00
Tl-208	F	4.8621E-01	9.6729E-02	1.0113E-01	0.472E-01
U-235	B	-3.3265E-02	3.4212E-02	3.4279E-02	0.727E-01

- All peaks for activity calculation had bad shape.
* - Activity omitted from total
& - Activity omitted from total and all peaks had bad shape.
< - MDA value printed.
A - Activity printed, but activity < MDA.
B - Activity < MDA and failed test.
C - Area < Critical level.
F - Failed fraction or key line test.
H - Halflife limit exceeded

---------- S U M M A R Y ----------

Total Activity (39.4 to 2490.9 keV) 1.254E+01 pCi/g

Laboratory: New World Technology

ORTEC g v - i (3263) Wan32 G53W2.10 28-JAN-2009 19:10:24
New World Technology Spectrum name: 2N000154.An1

Sample description
Parcel D 70-PDT-119-36 337g
1/23/09 11:07

Acquisition information
Start time: 28-Jan-2009 18:24:51
Live time: 2700
Real time: 2726

- -

***** S U M M A R Y O F N U C L I D E S I N S A M P L E *****

Nuclide		Time of Count Activity pCi/g	Uncertainty 2 Sigma Counting pCi/g	Total pCi/g	MDA pCi/g
Ac-228	F	5.2740E-01	2.8968E-01	2.9152E-01	0.189E+00
AM-241	#B	-3.3044E-01	2.6376E+00	2.6377E+00	0.853E+00
Bi-212	#B	-1.2350E-01	1.0494E+00	1.0494E+00	0.435E+00
BI-214	F	6.4415E-01	1.5566E-01	1.6050E-01	0.514E-01
CO-60	#B	1.8813E-02	8.4514E-02	8.4522E-02	0.404E-01
CS-137	#	1.1563E-01	6.2834E-02	6.3229E-02	0.384E-01
EU-152	B	7.2983E-02	1.4716E-01	1.4725E-01	0.138E+00
EU-154	F	1.7099E-01	1.4506E-01	1.4556E-01	0.103E+00
K-40	#	5.9087E+00	1.4792E+00	1.5241E+00	0.330E+00
Pa-234	#B	5.0942E-02	3.7714E-02	3.7913E-02	0.249E+00
Pb-210	#F	0.0000E+00	2.2776E+00	2.2781E+00	0.000E+00
Pb-212	F	6.1553E-01	1.5312E-01	1.5822E-01	0.993E-01
PB-214	F	3.6141E-01	1.7521E-01	1.7668E-01	0.123E+00
RA-226	B	6.4700E-01	1.4459E+00	1.4465E+00	0.119E+01
Th-230	#B	-5.3859E+00	4.5982E+01	4.5988E+01	0.219E+02
Th-234	#B	-1.0201E+02	1.9516E+02	1.9546E+02	0.112E+02
Tl-208	F	2.1615E-01	8.0519E-02	8.5081E-02	0.500E-01
U-235	#B	-2.2664E-01	7.7930E-01	7.7944E-01	0.971E-01

- All peaks for activity calculation had bad shape.
* - Activity omitted from total
& - Activity omitted from total and all peaks had bad shape.
< - MDA value printed.
A - Activity printed, but activity < MDA.
B - Activity < MDA and failed test.
C - Area < Critical level.
F - Failed fraction or key line test.
H - Halflife limit exceeded

---------- S U M M A R Y ----------

Total Activity (43.2 to 2752.7 keV) 8.389E+00 pCi/g

Laboratory: New World Technology

ORTEC g v - i (3263) Wan32 G53W2.10 27-JAN-2009 14:57:36
New World Technology Spectrum name: 3N000201.An1

Sample description
Parcel D 70-PDT-119-37 344g
1/23/09 11:11

Acquisition information
Start time: 27-Jan-2009 13:08:48
Live time: 2700
Real time: 2703

- -

***** S U M M A R Y O F N U C L I D E S I N S A M P L E *****

Nuclide		Time of Count Activity pCi/g	Uncertainty 2 Sigma Counting pCi/g	Total pCi/g	MDA pCi/g
Ac-228	F	1.0395E+00	2.0082E-01	2.1089E-01	0.170E+00
AM-241	#B	-6.1750E-02	2.4700E+00	2.4700E+00	0.882E-01
Bi-212	F	7.6237E-01	4.6095E-01	4.6333E-01	0.331E+00
BI-214	F	1.0392E+00	1.9018E-01	2.0038E-01	0.632E-01
CO-60	#B	-8.2512E-03	1.8434E-01	1.8434E-01	0.439E-01
CS-137	B	4.1897E-02	5.1460E-02	5.1523E-02	0.430E-01
EU-152	B	7.3536E-02	2.0397E-01	2.0404E-01	0.113E+00
EU-154	F	1.1413E-01	1.0731E-01	1.0761E-01	0.759E-01
K-40		6.2826E+00	1.2226E+00	1.2835E+00	0.401E+00
Pa-234	#B	5.8087E-02	8.4447E-02	8.4563E-02	0.135E+00
Pb-210	#B	-2.8810E+00	1.5087E+01	1.5089E+01	0.132E+01
Pb-212		9.6911E-01	1.4887E-01	1.6156E-01	0.928E-01
PB-214	F	7.6318E-01	2.1008E-01	2.1552E-01	0.111E+00
RA-226	F	1.0951E+00	1.2285E+00	1.2306E+00	0.983E+00
Th-230	#B	-2.7385E+00	1.0954E+02	1.0954E+02	0.943E+01
Th-234	B	-1.2333E+01	2.1831E+01	2.1871E+01	0.148E+01
Tl-208	F	3.6791E-01	9.2570E-02	9.5216E-02	0.523E-01
U-235	#B	-9.2791E-02	2.1679E-01	2.1687E-01	0.743E-01

- All peaks for activity calculation had bad shape.
* - Activity omitted from total
& - Activity omitted from total and all peaks had bad shape.
< - MDA value printed.
A - Activity printed, but activity < MDA.
B - Activity < MDA and failed test.
C - Area < Critical level.
F - Failed fraction or key line test.
H - Halflife limit exceeded

---------- S U M M A R Y ----------

Total Activity (39.2 to 2494.9 keV) 1.122E+01 pCi/g

Laboratory: New World Technology

ORTEC g v - i (3263) Npp32 G53W3.10 27-JAN-2009 16:18:06
New World Technology Spectrum name: 1N000208.An1

Sample description
Parcel D 70-PDT-119-38 329g
1/23/09 11:15

Acquisition information
Start time: 27-Jan-2009 15:31:28
Live time: 2700
Real time: 2702

- -

***** S U M M A R Y O F N U C L I D E S I N S A M P L E *****

Nuclide		Time of Count Activity pCi/g	Uncertainty 2 Sigma Counting pCi/g	Total pCi/g	MDA pCi/g
Ac-228	F	2.8644E-01	1.3169E-01	1.3288E-01	0.207E+00
AM-241	#A	-9.0448E-02	6.5865E-01	6.5869E-01	0.634E-01
Bi-212	F	6.5713E-01	3.1597E-01	3.1855E-01	0.158E+00
BI-214	F	4.4817E-01	1.2189E-01	1.2490E-01	0.394E-01
CO-60	#F	1.4088E-02	1.3420E-02	1.3448E-02	0.959E-02
CS-137	#B	-4.2260E-02	2.6562E-02	2.6562E-02	0.268E-01
EU-152	C	1.9183E-01	1.4472E-01	1.4535E-01	0.695E-01
EU-154	C	3.9276E-02	4.1806E-02	4.1896E-02	0.364E-01
K-40	#	3.4142E+00	7.8607E-01	8.1424E-01	0.105E+00
Pa-234	F	9.0067E-02	7.7269E-02	7.7571E-02	0.556E-01
Pb-210	B	5.8795E-01	7.3095E-01	7.3234E-01	0.606E+00
Pb-212	F	4.8741E-01	1.0022E-01	1.0507E-01	0.615E-01
Pb-214		4.6704E-01	1.0809E-01	1.1203E-01	0.366E-01
RA-226		1.3078E+00	9.1647E-01	9.2035E-01	0.713E+00
Th-230	#B	-5.7277E-01	2.4705E+00	2.4717E+00	0.190E+01
Th-234	#F	1.2488E+00	4.8879E-01	5.0667E-01	0.657E+00
Tl-208	#F	4.8450E-02	4.4642E-02	4.4739E-02	0.391E-01
U-235	B	-1.6246E-01	2.4902E-01	2.4924E-01	0.724E-01

- All peaks for activity calculation had bad shape.
* - Activity omitted from total
& - Activity omitted from total and all peaks had bad shape.
< - MDA value printed.
A - Activity printed, but activity < MDA.
B - Activity < MDA and failed test.
C - Area < Critical level.
F - Failed fraction or key line test.
H - Halflife limit exceeded

---------- S U M M A R Y ----------

Total Activity (39.4 to 2490.9 keV) 6.920E+00 pCi/g

Laboratory: New World Technology

ORTEC g v - i (3263) Wan32 G53W2.10 27-JAN-2009 09:12:16
New World Technology Spectrum name: 4N000122.An1

Sample description
Parcel D 70-PDT-119-39 324g
1/23/09 11:19

Acquisition information
Start time: 27-Jan-2009 07:27:43
Live time: 5400
Real time: 5403

- -

***** S U M M A R Y O F N U C L I D E S I N S A M P L E *****

Nuclide		Time of Count Activity pCi/g	Uncertainty 2 Sigma Counting pCi/g	Total pCi/g	MDA pCi/g
Ac-228	F	2.3839E-01	8.9032E-02	9.0248E-02	0.175E+00
AM-241	#B	-6.7879E-02	1.4872E+00	1.4872E+00	0.884E-01
Bi-212	F	4.3246E-01	3.3406E-01	3.3512E-01	0.254E+00
BI-214	F	3.5806E-01	2.2120E-01	2.2227E-01	0.656E-01
CO-60	#B	3.3437E-03	1.1944E-02	1.1946E-02	0.100E-01
CS-137	#B	-3.1151E-02	1.5423E-01	1.5424E-01	0.364E-01
EU-152	B	4.7212E-02	5.5352E-02	5.5452E-02	0.741E-01
EU-154	F	6.3267E-02	6.6440E-02	6.6590E-02	0.599E-01
K-40		6.7742E+00	9.1737E-01	1.0095E+00	0.250E+00
Pa-234	F	1.0340E-01	9.5345E-02	9.5670E-02	0.102E+00
Pb-210		1.2147E+00	9.4637E-01	9.5089E-01	0.765E+00
Pb-212	F	2.4333E-01	9.1164E-02	9.2515E-02	0.699E-01
Pb-214	F	3.1814E-01	9.5127E-02	9.7220E-02	0.640E-01
RA-226	B	4.8856E-01	1.1609E+00	1.1614E+00	0.958E+00
Th-230	#F	9.0085E+00	9.0348E+00	9.1145E+00	0.671E+01
Th-234		2.6265E+00	8.2109E-01	8.6787E-01	0.790E+00
Tl-208	F	2.1672E-01	1.0052E-01	1.0423E-01	0.310E-01
U-235	B	-4.7176E-02	7.5654E-02	7.5716E-02	0.633E-01

- All peaks for activity calculation had bad shape.
* - Activity omitted from total
& - Activity omitted from total and all peaks had bad shape.
< - MDA value printed.
A - Activity printed, but activity < MDA.
B - Activity < MDA and failed test.
C - Area < Critical level.
F - Failed fraction or key line test.
H - Halflife limit exceeded

---------- S U M M A R Y ----------

Total Activity (41.9 to 3331.9 keV) 1.218E+01 pCi/g

Laboratory: New World Technology

ORTEC g v - i (3263) Npp32 G53W3.10 27-JAN-2009 07:17:20
New World Technology Spectrum name: 1N000201.An1

Sample description
Parcel D 70-PDT-119-40 357g
1/23/09 11:23

Acquisition information
Start time: 26-Jan-2009 23:06:18
Live time: 2700
Real time: 2702

- -

***** S U M M A R Y O F N U C L I D E S I N S A M P L E *****

Nuclide		Time of Count Activity pCi/g	Uncertainty Counting pCi/g	2 Sigma Total pCi/g	MDA pCi/g
Ac-228	F	8.0312E-01	2.1836E-01	2.2397E-01	0.188E+00
AM-241	#A	-9.9148E-02	8.3136E-02	8.3136E-02	0.397E-01
Bi-212	B	2.8430E-01	4.4840E-01	4.4875E-01	0.346E+00
BI-214	F	7.7241E-01	1.4819E-01	1.5546E-01	0.477E-01
CO-60	#B	1.0508E-02	1.1488E-02	1.1506E-02	0.118E-01
CS-137	#B	-7.6032E-03	4.1726E-02	4.1729E-02	0.300E-01
EU-152	C	1.0902E-01	1.6481E-01	1.6499E-01	0.775E-01
EU-154	C	7.0533E-02	5.0296E-02	5.0537E-02	0.559E-01
K-40		5.3448E+00	9.9594E-01	1.0500E+00	0.179E+00
Pa-234	#F	2.7670E-01	1.2640E-01	1.2813E-01	0.708E-01
Pb-210	#F	8.9618E-01	9.2987E-01	9.3241E-01	0.654E+00
Pb-212	F	1.0324E+00	1.2310E-01	1.4008E-01	0.760E-01
Pb-214		7.2822E-01	1.1783E-01	1.2647E-01	0.642E-01
RA-226	B	4.6403E-01	1.1583E+00	1.1586E+00	0.959E+00
Th-230	#B	3.1693E+00	6.4373E+00	6.4511E+00	0.478E+01
Th-234		1.6292E+00	8.5170E-01	8.6931E-01	0.711E+00
Tl-208	F	3.6605E-01	8.3477E-02	8.6382E-02	0.418E-01
U-235	B	-3.0643E-02	4.1693E-02	4.1740E-02	0.689E-01

- All peaks for activity calculation had bad shape.
* - Activity omitted from total
& - Activity omitted from total and all peaks had bad shape.
< - MDA value printed.
A - Activity printed, but activity < MDA.
B - Activity < MDA and failed test.
C - Area < Critical level.
F - Failed fraction or key line test.
H - Halflife limit exceeded

---------- S U M M A R Y ----------

Total Activity (39.4 to 2490.9 keV) 1.068E+01 pCi/g

Laboratory: New World Technology

ORTEC g v - i (3263) Npp32 G53W3.10 26-JAN-2009 22:40:38
New World Technology Spectrum name: 1N000200.An1

Sample description
Parcel D 70-PDT-119-41 333g
1/23/09 11:29

Acquisition information
Start time: 26-Jan-2009 21:55:30
Live time: 2700
Real time: 2702

- -

***** S U M M A R Y O F N U C L I D E S I N S A M P L E *****

Nuclide		Time of Count Activity pCi/g	Uncertainty 2 Sigma Counting pCi/g	Total pCi/g	MDA pCi/g
Ac-228	F	6.0042E-01	2.4293E-01	2.4577E-01	0.212E+00
AM-241	#A	2.1949E-03	1.2553E-01	1.2553E-01	0.890E-01
Bi-212	F	7.4012E-01	3.9675E-01	3.9935E-01	0.243E+00
BI-214	F	5.7182E-01	1.3699E-01	1.4134E-01	0.474E-01
CO-60	#F	9.6547E-03	1.2151E-02	1.2166E-02	0.948E-02
CS-137	#B	-2.6097E-02	9.6425E-02	9.6438E-02	0.301E-01
EU-152	C	1.6187E-01	1.3574E-01	1.3621E-01	0.755E-01
EU-154	A	2.9584E-02	6.0586E-02	6.0622E-02	0.449E-01
K-40		5.2440E+00	9.6771E-01	1.0212E+00	0.104E+00
Pa-234	#F	2.4933E-01	1.1753E-01	1.1905E-01	0.776E-01
Pb-210		1.3675E+00	9.9333E-01	9.9887E-01	0.664E+00
Pb-212	F	5.9597E-01	1.1383E-01	1.2020E-01	0.741E-01
Pb-214		6.6000E-01	1.4657E-01	1.5236E-01	0.585E-01
RA-226	#B	-2.4324E-01	2.5376E+00	2.5376E+00	0.964E+00
Th-230	#B	4.2573E+00	6.3455E+00	6.3709E+00	0.463E+01
Th-234	F	2.3945E+00	7.1256E-01	7.5709E-01	0.779E+00
Tl-208	F	1.9086E-01	8.5709E-02	8.6488E-02	0.489E-01
U-235	#B	-4.5079E-02	3.4904E-02	3.5025E-02	0.687E-01

- All peaks for activity calculation had bad shape.
* - Activity omitted from total
& - Activity omitted from total and all peaks had bad shape.
< - MDA value printed.
A - Activity printed, but activity < MDA.
B - Activity < MDA and failed test.
C - Area < Critical level.
F - Failed fraction or key line test.
H - Halflife limit exceeded

---------- S U M M A R Y ----------

Total Activity (39.4 to 2490.9 keV) 1.261E+01 pCi/g

Laboratory: New World Technology

ORTEC g v - i (3263) Wan32 G53W2.10 27-JAN-2009 07:29:40
New World Technology Spectrum name: 5N000144.An1

Sample description
Parcel D 70-PDT-119-42 370g
1/23/09 11:32

Acquisition information
Start time: 26-Jan-2009 22:50:47
Live time: 2700
Real time: 2703

- -

***** S U M M A R Y O F N U C L I D E S I N S A M P L E *****

Nuclide		Time of Count Activity pCi/g	Uncertainty Counting pCi/g	2 Sigma Total pCi/g	MDA pCi/g
Ac-228	F	1.6090E+00	2.6433E-01	2.8249E-01	0.101E+00
AM-241	B	3.0523E-03	1.4767E-01	1.4767E-01	0.124E+00
Bi-212	F	7.1884E-01	5.4387E-01	5.4566E-01	0.402E+00
BI-214	F	1.2219E+00	1.8384E-01	1.9825E-01	0.704E-01
CO-60	#B	1.6980E-02	1.5031E-01	1.5031E-01	0.459E-01
CS-137	B	6.6336E-03	3.6985E-02	3.6988E-02	0.297E-01
EU-152	F	1.8066E-01	9.2118E-02	9.2997E-02	0.990E-01
EU-154	F	1.5432E-01	7.4251E-02	7.5044E-02	0.849E-01
K-40		1.1058E+01	1.3891E+00	1.5500E+00	0.102E+00
Pa-234	F	3.1103E-01	2.2912E-01	2.3034E-01	0.127E+00
Pb-210		3.5339E+00	1.8433E+00	1.8627E+00	0.102E+01
Pb-212	F	1.4328E+00	1.5262E-01	1.7861E-01	0.785E-01
Pb-214		1.0606E+00	2.2891E-01	2.3848E-01	0.967E-01
RA-226	B	8.9149E-01	1.4416E+00	1.4428E+00	0.118E+01
Th-230	#B	-3.0827E+00	2.4788E+01	2.4791E+01	0.109E+02
Th-234		2.6838E+00	1.2174E+00	1.2509E+00	0.924E+00
Tl-208	F	5.0352E-01	9.5611E-02	1.0036E-01	0.415E-01
U-235	B	5.1036E-02	6.5371E-02	6.5454E-02	0.772E-01

- All peaks for activity calculation had bad shape.
* - Activity omitted from total
& - Activity omitted from total and all peaks had bad shape.
< - MDA value printed.
A - Activity printed, but activity < MDA.
B - Activity < MDA and failed test.
C - Area < Critical level.
F - Failed fraction or key line test.
H - Halflife limit exceeded

---------- S U M M A R Y ----------

Total Activity (38.2 to 2445.9 keV) 2.413E+01 pCi/g

Laboratory: New World Technology

ORTEC g v - i (3263) Npp32 G53W3.10 26-JAN-2009 21:47:43
New World Technology Spectrum name: 1N000199.An1

Sample description
Parcel D 70-PDT-119-43 344g
1/23/09 11:30

Acquisition information
Start time: 26-Jan-2009 20:53:37
Live time: 2700
Real time: 2702

- -

***** S U M M A R Y O F N U C L I D E S I N S A M P L E *****

Nuclide		Time of Count Activity pCi/g	Uncertainty 2 Sigma Counting pCi/g	Total pCi/g	MDA pCi/g
Ac-228	F	7.4897E-01	1.8274E-01	1.8855E-01	0.201E+00
AM-241	#A	-6.3740E-02	3.4980E-01	3.4984E-01	0.735E-01
Bi-212	F	6.6736E-01	3.3039E-01	3.3294E-01	0.180E+00
BI-214	F	7.6912E-01	1.7570E-01	1.8183E-01	0.646E-01
CO-60	#B	-1.0633E-03	4.2532E-02	4.2532E-02	0.103E-01
CS-137	#B	-9.0545E-03	5.2412E-02	5.2415E-02	0.339E-01
EU-152	A	6.3048E-02	8.1699E-02	8.1818E-02	0.729E-01
EU-154	C	7.4984E-02	6.0767E-02	6.0993E-02	0.505E-01
K-40	#	5.8352E+00	1.1897E+00	1.2438E+00	0.343E+00
Pa-234	#F	1.4075E-01	1.2499E-01	1.2544E-01	0.769E-01
Pb-210		1.1432E+00	8.2105E-01	8.2574E-01	0.645E+00
Pb-212	F	8.2577E-01	1.2095E-01	1.3225E-01	0.703E-01
Pb-214		7.2807E-01	1.3928E-01	1.4666E-01	0.545E-01
RA-226	B	6.5095E-01	1.1860E+00	1.1867E+00	0.975E+00
Th-230	#B	2.0178E+00	5.0850E+00	5.0921E+00	0.404E+01
Th-234	F	1.8240E+00	6.5919E-01	6.8738E-01	0.643E+00
Tl-208	F	2.9933E-01	7.5832E-02	7.7977E-02	0.394E-01
U-235	B	-1.5331E-01	2.6266E-01	2.6284E-01	0.739E-01

- All peaks for activity calculation had bad shape.
* - Activity omitted from total
& - Activity omitted from total and all peaks had bad shape.
< - MDA value printed.
A - Activity printed, but activity < MDA.
B - Activity < MDA and failed test.
C - Area < Critical level.
F - Failed fraction or key line test.
H - Halflife limit exceeded

---------- S U M M A R Y ----------

Total Activity (39.4 to 2490.9 keV) 1.116E+01 pCi/g

Laboratory: New World Technology

ORTEC g v - i (3263) Wan32 G53W2.10 27-JAN-2009 07:11:14
New World Technology Spectrum name: 3N000197.An1

Sample description
Parcel D 70-PDT-119-44 338g
1/23/09 11:35

Acquisition information
Start time: 26-Jan-2009 22:37:40
Live time: 5400
Real time: 5406

- -

***** S U M M A R Y O F N U C L I D E S I N S A M P L E *****

Nuclide		Time of Count Activity pCi/g	Uncertainty 2 Sigma Counting pCi/g	Total pCi/g	MDA pCi/g
Ac-228	F	1.4889E+00	3.0074E-01	3.1456E-01	0.149E+00
AM-241	#B	-1.0312E-02	1.5676E-01	1.5676E-01	0.809E-01
Bi-212	B	1.2954E-01	5.3661E-01	5.3667E-01	0.354E+00
BI-214	F	1.0953E+00	1.5929E-01	1.7262E-01	0.601E-01
CO-60	#B	-2.4961E-02	1.2293E-01	1.2294E-01	0.356E-01
CS-137	#B	-1.7295E-02	7.8817E-02	7.8825E-02	0.353E-01
EU-152	B	4.8121E-02	6.4028E-02	6.4118E-02	0.740E-01
EU-154	B	2.7699E-02	9.4349E-02	9.4369E-02	0.554E-01
K-40		8.3135E+00	1.0674E+00	1.1860E+00	0.248E+00
Pa-234	B	7.7546E-02	1.2398E-01	1.2412E-01	0.935E-01
Pb-210	#B	-2.5546E+00	7.9395E+00	7.9419E+00	0.961E+00
Pb-212		1.5429E+00	1.2238E-01	1.5799E-01	0.662E-01
PB-214		8.2372E-01	1.7123E-01	1.7894E-01	0.921E-01
RA-226		1.1239E+00	1.0031E+00	1.0057E+00	0.808E+00
Th-230	#B	-1.4450E+00	2.1556E+01	2.1557E+01	0.576E+01
Th-234	#B	-1.1932E+01	1.4869E+01	1.4924E+01	0.112E+01
Tl-208	F	4.8706E-01	6.4288E-02	7.0738E-02	0.270E-01
U-235	#B	-1.4444E-01	3.0065E-01	3.0080E-01	0.592E-01

- All peaks for activity calculation had bad shape.
* - Activity omitted from total
& - Activity omitted from total and all peaks had bad shape.
< - MDA value printed.
A - Activity printed, but activity < MDA.
B - Activity < MDA and failed test.
C - Area < Critical level.
F - Failed fraction or key line test.
H - Halflife limit exceeded

---------- S U M M A R Y ----------

Total Activity (39.2 to 2494.9 keV) 1.488E+01 pCi/g

Laboratory: New World Technology

ORTEC g v - i (3263) Npp32 G53W3.10 26-JAN-2009 20:46:35
New World Technology Spectrum name: 1N000198.An1

Sample description
Parcel D 70-PDT-119-45 371g
1/23/09 11:39

Acquisition information
Start time: 26-Jan-2009 19:12:13
Live time: 5400
Real time: 5404

- -

***** S U M M A R Y O F N U C L I D E S I N S A M P L E *****

Nuclide		Time of Count Activity pCi/g	Uncertainty 2 Sigma Counting pCi/g	Total pCi/g	MDA pCi/g
Ac-228	F	1.7054E+00	1.7023E-01	2.0042E-01	0.147E+00
AM-241	#A	-5.1643E-02	3.2673E-01	3.2675E-01	0.710E-01
Bi-212	F	1.3350E+00	3.4557E-01	3.5521E-01	0.206E+00
BI-214	F	1.1314E+00	1.2319E-01	1.4111E-01	0.566E-01
CO-60	#B	-9.8592E-04	2.0361E-02	2.0361E-02	0.425E-02
CS-137	#B	-3.3993E-03	3.2871E-02	3.2871E-02	0.258E-01
EU-152	C	1.9351E-01	1.0304E-01	1.0393E-01	0.504E-01
EU-154	C	3.7905E-02	2.8734E-02	2.8856E-02	0.355E-01
K-40		5.6984E+00	8.5640E-01	9.2682E-01	0.233E+00
Pa-234	F	1.8441E-01	1.0148E-01	1.0244E-01	0.755E-01
Pb-210		1.2129E+00	6.7221E-01	6.7863E-01	0.533E+00
Pb-212		1.9479E+00	1.1786E-01	1.7263E-01	0.573E-01
Pb-214		1.2954E+00	1.3905E-01	1.6127E-01	0.562E-01
RA-226		1.2979E+00	9.3854E-01	9.4226E-01	0.754E+00
Th-230	#B	4.1641E+00	5.6998E+00	5.7267E+00	0.435E+01
Th-234		2.9316E+00	5.4748E-01	6.3073E-01	0.545E+00
Tl-208		5.6988E-01	6.4343E-02	7.3048E-02	0.337E-01
U-235	B	1.2403E-02	8.9270E-03	8.9627E-03	0.527E-01

- All peaks for activity calculation had bad shape.
* - Activity omitted from total
& - Activity omitted from total and all peaks had bad shape.
< - MDA value printed.
A - Activity printed, but activity < MDA.
B - Activity < MDA and failed test.
C - Area < Critical level.
F - Failed fraction or key line test.
H - Halflife limit exceeded

---------- S U M M A R Y ----------

Total Activity (39.4 to 2490.9 keV) 1.931E+01 pCi/g

Laboratory: New World Technology

ORTEC g v - i (3263) Wan32 G53W2.10 26-JAN-2009 21:45:05
New World Technology Spectrum name: 3N000196.An1

Sample description
Parcel D 70-PDT-119-46 390g
1/23/09 11:40

Acquisition information
Start time: 26-Jan-2009 19:55:30
Live time: 5400
Real time: 5408

- -

***** S U M M A R Y O F N U C L I D E S I N S A M P L E *****

Nuclide		Activity pCi/g	Time of Count Uncertainty Counting pCi/g	2 Sigma Total pCi/g	MDA pCi/g
Ac-228	F	1.3913E+00	3.7026E-01	3.8016E-01	0.261E+00
AM-241	#B	-2.0105E-02	2.3160E-01	2.3161E-01	0.806E-01
Bi-212	F	1.3967E+00	4.4468E-01	4.5289E-01	0.312E+00
BI-214	F	1.9674E+00	1.7961E-01	2.1571E-01	0.609E-01
CO-60	#B	9.7328E-03	7.3164E-02	7.3166E-02	0.303E-01
CS-137	B	1.8013E-02	4.6354E-02	4.6368E-02	0.394E-01
EU-152	#F	9.3733E-02	8.0104E-02	8.0377E-02	0.653E-01
EU-154	B	4.7519E-02	1.0148E-01	1.0153E-01	0.538E-01
K-40		3.8545E+00	1.1701E+00	1.1944E+00	0.836E+00
Pa-234	F	2.1707E-01	1.9458E-01	1.9528E-01	0.115E+00
Pb-210	#B	-2.6260E+00	6.1736E+00	6.1769E+00	0.887E+00
Pb-212		3.0946E+00	1.5263E-01	2.5190E-01	0.707E-01
PB-214		1.9107E+00	1.5131E-01	1.9344E-01	0.941E-01
RA-226		2.7285E+00	1.1190E+00	1.1328E+00	0.870E+00
Th-230	#B	2.9523E+00	6.9154E+00	6.9266E+00	0.568E+01
Th-234	B	-9.6336E+00	9.5318E+00	9.5874E+00	0.104E+01
Tl-208	F	1.0862E+00	1.0111E-01	1.2064E-01	0.342E-01
U-235	B	-9.4398E-02	2.0981E-01	2.0990E-01	0.632E-01

- All peaks for activity calculation had bad shape.
* - Activity omitted from total
& - Activity omitted from total and all peaks had bad shape.
< - MDA value printed.
A - Activity printed, but activity < MDA.
B - Activity < MDA and failed test.
C - Area < Critical level.
F - Failed fraction or key line test.
H - Halflife limit exceeded

---------- S U M M A R Y ----------

Total Activity (39.2 to 2494.9 keV) 1.765E+01 pCi/g

Laboratory: New World Technology

ORTEC g v - i (3263) Npp32 G53W3.10 26-JAN-2009 18:14:52
New World Technology Spectrum name: 1N000197.An1

Sample description
Parcel D 70-PDT-119-47 326g
1/23/09 11:43

Acquisition information
Start time: 26-Jan-2009 17:21:56
Live time: 2700
Real time: 2702

- -

***** S U M M A R Y O F N U C L I D E S I N S A M P L E *****

Nuclide		Activity pCi/g	Time of Count Uncertainty Counting pCi/g	2 Sigma Total pCi/g	MDA pCi/g
Ac-228	F	6.3291E-01	1.9138E-01	1.9537E-01	0.201E+00
AM-241	#A	-3.5231E-02	1.4513E-01	1.4516E-01	0.676E-01
Bi-212	F	7.3230E-01	3.6487E-01	3.6765E-01	0.205E+00
BI-214	F	3.8238E-01	1.2754E-01	1.2964E-01	0.603E-01
CO-60	#F	1.5500E-02	1.6622E-02	1.6650E-02	0.968E-02
CS-137	#B	-2.9029E-02	1.3755E-01	1.3757E-01	0.328E-01
EU-152	C	1.1455E-01	1.1393E-01	1.1421E-01	0.570E-01
EU-154		1.0003E-01	6.7889E-02	6.8249E-02	0.416E-01
K-40		4.8561E+00	9.4129E-01	9.8855E-01	0.106E+00
Pa-234	#B	3.4952E-02	6.5149E-02	6.5203E-02	0.678E-01
Pb-210	#B	4.6361E-01	1.0129E+00	1.0135E+00	0.714E+00
Pb-212	F	4.8222E-01	1.0380E-01	1.0840E-01	0.692E-01
Pb-214	F	5.3627E-01	1.4266E-01	1.4661E-01	0.622E-01
RA-226	#B	-2.7855E-02	1.2505E+00	1.2505E+00	0.976E+00
Th-230		1.1885E+01	7.5726E+00	7.7365E+00	0.456E+01
Th-234	F	2.0279E+00	8.0274E-01	8.3147E-01	0.674E+00
Tl-208	F	1.5681E-01	7.0698E-02	7.1336E-02	0.439E-01
U-235	B	-5.2772E-02	4.1964E-02	4.2102E-02	0.701E-01

- All peaks for activity calculation had bad shape.
* - Activity omitted from total
& - Activity omitted from total and all peaks had bad shape.
< - MDA value printed.
A - Activity printed, but activity < MDA.
B - Activity < MDA and failed test.
C - Area < Critical level.
F - Failed fraction or key line test.
H - Halflife limit exceeded

---------- S U M M A R Y ----------

Total Activity (39.4 to 2490.9 keV) 2.179E+01 pCi/g

Laboratory: New World Technology

ORTEC g v - i (3263) Wan32 G53W2.10 26-JAN-2009 18:19:25
New World Technology Spectrum name: 4N000121.An1

Sample description
Parcel D 70-PDT-119-48 366g
1/23/09 11:48

Acquisition information
Start time: 26-Jan-2009 17:19:53
Live time: 2700
Real time: 2703

- -

***** S U M M A R Y O F N U C L I D E S I N S A M P L E *****

Nuclide		Time of Count Activity pCi/g	Uncertainty 2 Sigma Counting pCi/g	Total pCi/g	MDA pCi/g
Ac-228	F	2.8223E+00	3.4837E-01	3.8977E-01	0.228E+00
AM-241	B	1.8411E-02	1.9348E-01	1.9349E-01	0.161E+00
Bi-212	F	2.5703E+00	1.0517E+00	1.0635E+00	0.485E+00
BI-214	F	1.8477E+00	2.4284E-01	2.6750E-01	0.106E+00
CO-60	#B	-2.3550E-02	1.7495E-01	1.7496E-01	0.625E-01
CS-137	#B	-3.7561E-02	5.7736E-01	5.7736E-01	0.497E-01
EU-152	#F	1.9803E-01	1.6103E-01	1.6164E-01	0.130E+00
EU-154	#B	5.2873E-02	2.0244E-01	2.0248E-01	0.898E-01
K-40		1.0702E+01	1.5617E+00	1.6976E+00	0.624E+00
Pa-234	F	1.9051E-01	1.1824E-01	1.1913E-01	0.174E+00
Pb-210		2.3329E+00	1.6429E+00	1.6525E+00	0.130E+01
Pb-212		3.1350E+00	2.4917E-01	3.2140E-01	0.126E+00
Pb-214		2.2512E+00	3.2412E-01	3.5386E-01	0.144E+00
RA-226		3.2420E+00	2.1157E+00	2.1261E+00	0.167E+01
Th-230	#F	1.8604E+01	1.9511E+01	1.9668E+01	0.135E+02
Th-234		4.5156E+00	1.3865E+00	1.4683E+00	0.131E+01
Tl-208	F	1.2216E+00	1.9686E-01	2.5077E-01	0.261E-01
U-235	#B	-4.8128E-03	3.7216E-02	3.7218E-02	0.112E+00

- All peaks for activity calculation had bad shape.
* - Activity omitted from total
& - Activity omitted from total and all peaks had bad shape.
< - MDA value printed.
A - Activity printed, but activity < MDA.
B - Activity < MDA and failed test.
C - Area < Critical level.
F - Failed fraction or key line test.
H - Halflife limit exceeded

---------- S U M M A R Y ----------

Total Activity (41.9 to 3331.9 keV) 3.484E+01 pCi/g

Laboratory: New World Technology

ORTEC g v - i (3263) Wan32 G53W2.10 27-JAN-2009 08:55:45
New World Technology Spectrum name: 2N000150.An1

Sample description
Parcel D 70-PDT-119-49 336g
1/23/09 11:52

Acquisition information
Start time: 27-Jan-2009 07:15:00
Live time: 5400
Real time: 5407

- -

***** S U M M A R Y O F N U C L I D E S I N S A M P L E *****

Nuclide		Time of Count Activity pCi/g	Uncertainty Counting pCi/g	2 Sigma Total pCi/g	MDA pCi/g
Ac-228	F	1.0820E+00	2.5124E-01	2.6002E-01	0.143E+00
AM-241	#B	-6.8124E-01	1.6916E+01	1.6916E+01	0.418E+00
Bi-212	F	5.1060E-01	3.3910E-01	3.4054E-01	0.266E+00
BI-214	F	1.0273E+00	1.5766E-01	1.6955E-01	0.638E-01
CO-60	#B	1.3152E-02	9.7673E-02	9.7676E-02	0.346E-01
CS-137	B	1.8740E-02	4.7582E-02	4.7596E-02	0.415E-01
EU-152	F	2.8461E-01	1.1534E-01	1.1708E-01	0.116E+00
EU-154	B	6.7658E-02	6.5261E-02	6.5436E-02	0.880E-01
K-40	#	1.2001E+01	1.1405E+00	1.3630E+00	0.631E-01
Pa-234	#B	5.8390E-02	5.4203E-02	5.4386E-02	0.183E+00
Pb-210	#F	0.0000E+00	2.9526E+00	2.9527E+00	0.000E+00
Pb-212		1.0184E+00	1.2950E-01	1.4533E-01	0.821E-01
PB-214	F	5.9912E-01	1.2505E-01	1.3064E-01	0.865E-01
RA-226	B	7.4615E-02	1.2975E+00	1.2975E+00	0.108E+01
Th-230	#B	-4.1265E+00	3.6243E+01	3.6248E+01	0.193E+02
Th-234	#B	-1.0819E+02	2.9528E+03	2.9529E+03	0.859E+01
Tl-208	F	3.5407E-01	6.4431E-02	7.8603E-02	0.546E-01
U-235	#B	-1.0470E-01	1.5658E-01	1.5673E-01	0.711E-01

- All peaks for activity calculation had bad shape.
* - Activity omitted from total
& - Activity omitted from total and all peaks had bad shape.
< - MDA value printed.
A - Activity printed, but activity < MDA.
B - Activity < MDA and failed test.
C - Area < Critical level.
F - Failed fraction or key line test.
H - Halflife limit exceeded

---------- S U M M A R Y ----------

Total Activity (43.2 to 2752.7 keV) 1.659E+01 pCi/g

Laboratory: New World Technology

ORTEC g v - i (3263) wan32 G53W2.06 27-JAN-2009 07:41:54
New World Technology Spectrum name: 6N000139.An1

Sample description
Parcel D 70-PDT-119-50 370g
1/23/09 11:56

Acquisition information
Start time: 26-Jan-2009 22:17:38
Live time: 5400
Real time: 5412

- -

***** S U M M A R Y O F N U C L I D E S I N S A M P L E *****

Nuclide		Time of Count Activity pCi/g	Uncertainty 2 Sigma Counting pCi/g	Total pCi/g	MDA pCi/g
Ac-228		1.5539E+00	2.5158E-01	2.5809E-01	0.125E+00
AM-241	#A	-2.0623E-02	-1.9882E-01	-1.9882E-01	0.859E-01
Bi-212	F	1.1313E+00	3.2907E-01	3.3173E-01	0.217E+00
BI-214		1.3768E+00	1.7402E-01	1.8136E-01	0.699E-01
CO-60	#F	2.3954E-02	1.6937E-02	1.6960E-02	0.117E-01
CS-137	B	1.3419E-02	3.6622E-02	3.6625E-02	0.294E-01
EU-152	#F	1.0684E-01	4.7537E-02	4.7700E-02	0.754E-01
EU-154	F	8.0962E-02	7.9165E-02	7.9222E-02	0.380E-01
K-40		1.0282E+01	1.0470E+00	1.1143E+00	0.420E+00
Pa-234	F	1.9206E-01	1.3031E-01	1.3050E-01	0.898E-01
Pb-210	F	7.7981E-01	9.7995E-01	9.8038E-01	0.683E+00
Pb-212	F	1.8514E+00	1.2084E-01	1.3899E-01	0.621E-01
PB-214		1.2691E+00	1.2670E-01	1.3516E-01	0.765E-01
RA-226		1.8136E+00	9.9038E-01	9.9266E-01	0.786E+00
Th-230	#B	5.7271E+00	1.3315E+01	1.3316E+01	0.867E+01
Th-234	F	9.0876E-01	2.2557E-01	2.2806E-01	0.838E+00
Tl-208	F	1.0183E+00	1.4254E-01	1.4745E-01	0.277E-01
U-235	B	-4.1094E-02	-5.0936E-02	-5.0959E-02	0.570E-01

- All peaks for activity calculation had bad shape.
* - Activity omitted from total
& - Activity omitted from total and all peaks had bad shape.
< - MDA value printed.
A - Activity printed, but activity < MDA.
B - Activity < MDA and failed test.
C - Area < Critical level.
F - Failed fraction or key line test.
H - Halflife limit exceeded

---------- S U M M A R Y ----------

Total Activity (43.5 to 2782.0 keV) 2.0296816E+01 pCi/g

Laboratory: New World Technology

ORTEC g v - i (3263) Wan32 G53W2.10 26-JAN-2009 17:23:01
New World Technology Spectrum name: 5N000143.An1

Sample description
Parcel D 70-PDT-119-51 349g
1/23/09 11:59

Acquisition information
Start time: 26-Jan-2009 16:35:39
Live time: 2700
Real time: 2702

- -

***** S U M M A R Y O F N U C L I D E S I N S A M P L E *****

Nuclide		Activity pCi/g	Time of Count Uncertainty Counting pCi/g	2 Sigma Total pCi/g	MDA pCi/g
Ac-228	F	1.6139E+00	2.8523E-01	3.0224E-01	0.133E+00
AM-241	B	4.2508E-03	1.5109E-01	1.5109E-01	0.127E+00
Bi-212	F	1.4599E+00	4.9506E-01	5.0312E-01	0.273E+00
BI-214	F	1.2495E+00	2.4250E-01	2.5409E-01	0.809E-01
CO-60	#B	-1.2398E-02	2.3001E-01	2.3001E-01	0.585E-01
CS-137		6.5171E-02	4.5489E-02	4.5663E-02	0.288E-01
EU-152	B	8.6756E-02	1.0950E-01	1.0967E-01	0.916E-01
EU-154	#B	1.0445E-02	5.6128E-02	5.6133E-02	0.687E-01
K-40		1.3109E+01	1.5573E+00	1.7577E+00	0.108E+00
Pa-234	F	1.7061E-01	1.4687E-01	1.4745E-01	0.116E+00
Pb-210	#B	9.9191E-01	3.1003E+00	3.1013E+00	0.122E+01
Pb-212		1.4861E+00	1.5942E-01	1.8621E-01	0.815E-01
Pb-214		1.0632E+00	1.5779E-01	1.7145E-01	0.846E-01
RA-226	B	9.3076E-02	1.5252E+00	1.5252E+00	0.128E+01
Th-230	#B	-4.6177E+00	2.7193E+01	2.7200E+01	0.903E+01
Th-234		3.4873E+00	1.0781E+00	1.1408E+00	0.987E+00
Tl-208		4.4985E-01	1.0933E-01	1.1267E-01	0.464E-01
U-235	F	1.0014E-01	1.1690E-01	1.1707E-01	0.742E-01

- All peaks for activity calculation had bad shape.
* - Activity omitted from total
& - Activity omitted from total and all peaks had bad shape.
< - MDA value printed.
A - Activity printed, but activity < MDA.
B - Activity < MDA and failed test.
C - Area < Critical level.
F - Failed fraction or key line test.
H - Halflife limit exceeded

---------- S U M M A R Y ----------

Total Activity (38.2 to 2445.9 keV) 2.398E+01 pCi/g

Laboratory: New World Technology

ORTEC g v - i (3263) wan32 G53W2.06 10-FEB-2009 15:05:32
New World Technology Spectrum name: 6N000214.An1

Sample description
Parcel D 70-PDT-119-52 398g
2/03/09 13:50

Acquisition information
Start time: 10-Feb-2009 14:20:18
Live time: 2700
Real time: 2705

- -

***** S U M M A R Y O F N U C L I D E S I N S A M P L E *****

Nuclide		Time of Count Activity pCi/g	Uncertainty 2 Sigma Counting pCi/g	Total pCi/g	MDA pCi/g
Ac-228	F	5.2781E-01	2.3026E-01	2.3109E-01	0.159E+00
AM-241	#A	-3.1521E-02	-2.0591E-01	-2.0591E-01	0.627E-01
Bi-212	F	5.3545E-01	3.6427E-01	3.6481E-01	0.269E+00
BI-214		6.8507E-01	1.4563E-01	1.4783E-01	0.623E-01
CO-60	#F	2.2628E-02	1.5552E-02	1.5575E-02	0.150E-01
CS-137	B	2.1163E-02	4.8280E-02	4.8287E-02	0.380E-01
EU-152	#F	1.5144E-01	6.9462E-02	6.9687E-02	0.739E-01
EU-154	F	1.6706E-01	1.0615E-01	1.0633E-01	0.417E-01
K-40		9.2955E+00	1.3184E+00	1.3627E+00	0.471E+00
Pa-234	F	3.9639E-01	2.2554E-01	2.2602E-01	0.103E+00
Pb-210	B	3.9568E-01	9.5627E-01	9.5638E-01	0.802E+00
Pb-212	F	5.1086E-01	1.0385E-01	1.0556E-01	0.626E-01
PB-214		5.7182E-01	1.3838E-01	1.3999E-01	0.881E-01
RA-226	B	5.9782E-01	9.7014E-01	9.7040E-01	0.788E+00
Th-230	#B	-3.5350E+00	-2.1488E+01	-2.1488E+01	0.705E+01
Th-234	#F	8.6755E-01	3.1617E-01	3.1779E-01	0.732E+00
Tl-208	F	2.9806E-01	9.2881E-02	9.3535E-02	0.267E-01
U-235	#B	-1.0207E-01	-2.5837E-01	-2.5840E-01	0.631E-01

- All peaks for activity calculation had bad shape.
* - Activity omitted from total
& - Activity omitted from total and all peaks had bad shape.
< - MDA value printed.
A - Activity printed, but activity < MDA.
B - Activity < MDA and failed test.
C - Area < Critical level.
F - Failed fraction or key line test.
H - Halflife limit exceeded

---------- S U M M A R Y ----------

Total Activity (43.5 to 2782.6 keV) 1.2285519E+01 pCi/g

Laboratory: New World Technology

ORTEC g v - i (3263) Wan32 G53W2.10 10-FEB-2009 15:59:49
New World Technology Spectrum name: 1N000302.An1

Sample description
Parcel D 70-PDT-119-53 365g
2/03/09 13:45

Acquisition information
Start time: 10-Feb-2009 15:01:51
Live time: 2700
Real time: 2702

- -

***** S U M M A R Y O F N U C L I D E S I N S A M P L E *****

Nuclide		Activity pCi/g	Time of Count Uncertainty Counting pCi/g	2 Sigma Total pCi/g	MDA pCi/g
Ac-228	F	2.4139E-01	1.0251E-01	1.0360E-01	0.225E+00
AM-241	#A	-4.7378E-02	2.4397E-01	2.4400E-01	0.767E-01
Bi-212	F	5.8014E-01	2.9657E-01	2.9871E-01	0.139E+00
BI-214	F	5.2698E-01	1.4081E-01	1.4441E-01	0.535E-01
CO-60	F	1.7458E-02	2.5259E-02	2.5282E-02	0.163E-01
CS-137	#B	-1.2912E-02	5.1407E-02	5.1413E-02	0.288E-01
EU-152	A	1.5610E-02	5.0719E-02	5.0731E-02	0.616E-01
EU-154	C	8.4788E-02	6.2819E-02	6.3098E-02	0.356E-01
K-40		8.2791E+00	1.1608E+00	1.2699E+00	0.947E-01
Pa-234	F	7.8804E-02	8.9102E-02	8.9302E-02	0.753E-01
Pb-210	B	4.5822E-01	7.3741E-01	7.3825E-01	0.656E+00
Pb-212	F	4.9600E-01	9.2130E-02	9.7569E-02	0.537E-01
Pb-214		4.5376E-01	1.0065E-01	1.0464E-01	0.351E-01
RA-226		1.1375E+00	9.1586E-01	9.1880E-01	0.728E+00
Th-230	#B	-7.4240E+00	7.4316E+01	7.4323E+01	0.611E+01
Th-234	#B	-1.9810E+00	1.9361E+00	1.9476E+00	0.752E+00
Tl-208	#F	5.5701E-02	1.2461E-01	1.2465E-01	0.476E-01
U-235	#B	-1.7959E-01	3.7097E-01	3.7115E-01	0.672E-01

- All peaks for activity calculation had bad shape.
* - Activity omitted from total
& - Activity omitted from total and all peaks had bad shape.
< - MDA value printed.
A - Activity printed, but activity < MDA.
B - Activity < MDA and failed test.
C - Area < Critical level.
F - Failed fraction or key line test.
H - Halflife limit exceeded

---------- S U M M A R Y ----------

Total Activity (39.4 to 2490.9 keV) 1.147E+01 pCi/g

Laboratory: New World Technology

ORTEC g v - i (3263) Wan32 G53W2.10 10-FEB-2009 17:16:25
New World Technology Spectrum name: 2N000199.An1

Sample description
Parcel D 70-PDT-119-54 355g
2/03/09 13:40

Acquisition information
Start time: 10-Feb-2009 16:31:14
Live time: 2700
Real time: 2704

- -

***** S U M M A R Y O F N U C L I D E S I N S A M P L E *****

Nuclide		Time of Count Activity pCi/g	Uncertainty Counting pCi/g	2 Sigma Total pCi/g	MDA pCi/g
Ac-228	F	3.1665E-01	1.2734E-01	1.2884E-01	0.222E+00
AM-241	#B	-7.8384E-02	1.2241E+00	1.2242E+00	0.736E+00
Bi-212	F	5.8736E-01	4.3295E-01	4.3445E-01	0.325E+00
BI-214	F	3.8773E-01	3.2523E-01	3.2608E-01	0.844E-01
CO-60	#B	8.2798E-03	8.8792E-03	8.8936E-03	0.111E-01
CS-137	B	4.5043E-02	5.7081E-02	5.7147E-02	0.476E-01
EU-152	B	3.1052E-02	9.0531E-02	9.0557E-02	0.146E+00
EU-154	B	6.0414E-02	8.0769E-02	8.0881E-02	0.104E+00
K-40		1.1871E+01	1.5606E+00	1.7264E+00	0.119E+00
Pa-234	#B	4.2068E-02	1.2073E-01	1.2078E-01	0.232E+00
Pb-210	#F	0.0000E+00	1.4516E+00	1.4516E+00	0.000E+00
Pb-212	F	2.1208E-01	1.1916E-01	1.1995E-01	0.970E-01
PB-214	F	2.9345E-01	1.7703E-01	1.7800E-01	0.121E+00
RA-226	B	1.6329E-01	1.3450E+00	1.3451E+00	0.114E+01
Th-230	F	4.2465E+01	5.4427E+01	5.4722E+01	0.333E+02
Th-234	#F	5.7756E+00	5.7598E+00	5.7929E+00	0.373E+01
Tl-208	F	2.1623E-01	6.9136E-02	7.4403E-02	0.206E-01
U-235	#B	-1.9264E-01	5.2133E-01	5.2148E-01	0.930E-01

- All peaks for activity calculation had bad shape.
* - Activity omitted from total
& - Activity omitted from total and all peaks had bad shape.
< - MDA value printed.
A - Activity printed, but activity < MDA.
B - Activity < MDA and failed test.
C - Area < Critical level.
F - Failed fraction or key line test.
H - Halflife limit exceeded

---------- S U M M A R Y ----------

Total Activity (43.2 to 2752.7 keV) 1.934E+01 pCi/g

Laboratory: New World Technology

ORTEC g v - i (3263) Wan32 G53W2.10 10-FEB-2009 15:20:20
New World Technology Spectrum name: 2N000197.An1

Sample description
Parcel D 70-PDT-119-55 353g
2/03/09 13:35

Acquisition information
Start time: 10-Feb-2009 14:35:09
Live time: 2700
Real time: 2703

- -

***** S U M M A R Y O F N U C L I D E S I N S A M P L E *****

Nuclide		Time of Count Activity pCi/g	Uncertainty Counting pCi/g	2 Sigma Total pCi/g	MDA pCi/g
Ac-228	F	2.4051E-01	1.2368E-01	1.2457E-01	0.219E+00
AM-241	#B	-1.7820E-01	1.0626E+00	1.0627E+00	0.585E+00
Bi-212	B	4.5234E-02	1.2794E-01	1.2797E-01	0.292E+00
BI-214	F	3.5790E-01	1.3560E-01	1.3733E-01	0.622E-01
CO-60	#B	1.2628E-02	1.0796E-02	1.0824E-02	0.352E-01
CS-137		6.6120E-02	4.8286E-02	4.8454E-02	0.377E-01
EU-152	#F	1.7731E-01	1.7672E-01	1.7717E-01	0.121E+00
EU-154	#B	3.4050E-03	8.8734E-02	8.8734E-02	0.731E-01
K-40		9.9294E+00	1.4315E+00	1.5590E+00	0.120E+00
Pa-234	#F	2.4032E-01	2.2080E-01	2.2156E-01	0.196E+00
Pb-210	#F	0.0000E+00	4.4740E+00	4.4740E+00	0.000E+00
Pb-212	F	1.9590E-01	1.0800E-01	1.0874E-01	0.886E-01
PB-214	F	2.3730E-01	1.4910E-01	1.4985E-01	0.106E+00
RA-226	B	6.2946E-01	1.1384E+00	1.1391E+00	0.948E+00
Th-230	#B	4.1420E+00	2.2186E+01	2.2193E+01	0.191E+02
Th-234	#F	7.0094E+00	6.5175E+00	6.5605E+00	0.403E+01
Tl-208	F	1.2353E-01	4.5657E-02	4.8283E-02	0.931E-01
U-235	B	-2.2884E-01	8.0323E-01	8.0337E-01	0.838E-01

- All peaks for activity calculation had bad shape.
* - Activity omitted from total
& - Activity omitted from total and all peaks had bad shape.
< - MDA value printed.
A - Activity printed, but activity < MDA.
B - Activity < MDA and failed test.
C - Area < Critical level.
F - Failed fraction or key line test.
H - Halflife limit exceeded

---------- S U M M A R Y ----------

Total Activity (43.2 to 2752.7 keV) 1.780E+01 pCi/g

Laboratory: New World Technology

ORTEC g v - i (3263) Wan32 G53W2.10 10-FEB-2009 16:54:47
New World Technology Spectrum name: 1N000303.An1

Sample description
Parcel D 70-PDT-119-56 347g
2/03/09 13:30

Acquisition information
Start time: 10-Feb-2009 16:09:38
Live time: 2700
Real time: 2702

- -

***** S U M M A R Y O F N U C L I D E S I N S A M P L E *****

Nuclide		Time of Count Activity pCi/g	Uncertainty Counting pCi/g	2 Sigma Total pCi/g	MDA pCi/g
Ac-228	B	5.1664E-03	3.2338E-03	3.2496E-03	0.219E+00
AM-241	#A	-9.9297E-03	1.1703E-01	1.1703E-01	0.716E-01
Bi-212	F	2.3806E-01	2.0654E-01	2.0706E-01	0.120E+00
BI-214	F	1.4733E-01	1.4436E-01	1.4463E-01	0.608E-01
CO-60	#B	-6.1765E-03	1.6742E-01	1.6742E-01	0.378E-01
CS-137	#B	-2.2811E-02	9.2209E-02	9.2219E-02	0.307E-01
EU-152	C	8.7531E-02	8.3386E-02	8.3611E-02	0.497E-01
EU-154		1.2911E-01	6.0719E-02	6.1387E-02	0.372E-01
K-40		5.8360E+00	1.2061E+00	1.2595E+00	0.322E+00
Pa-234	#F	8.1663E-02	9.3273E-02	9.3478E-02	0.583E-01
Pb-210	#B	-2.0929E-01	1.1875E+00	1.1876E+00	0.686E+00
Pb-212	F	2.5214E-01	7.5603E-02	7.7346E-02	0.514E-01
Pb-214	F	2.7334E-01	9.9274E-02	1.0076E-01	0.421E-01
RA-226	#B	-1.9830E-01	1.7883E+00	1.7884E+00	0.860E+00
Th-230	#B	-4.2890E+00	3.1005E+01	3.1010E+01	0.594E+01
Th-234	#B	-1.2253E+00	1.4171E+00	1.4232E+00	0.752E+00
Tl-208	#B	-1.9325E-02	1.5099E-01	1.5099E-01	0.467E-01
U-235	B	-1.0299E-01	1.2027E-01	1.2045E-01	0.613E-01

- All peaks for activity calculation had bad shape.
* - Activity omitted from total
& - Activity omitted from total and all peaks had bad shape.
< - MDA value printed.
A - Activity printed, but activity < MDA.
B - Activity < MDA and failed test.
C - Area < Critical level.
F - Failed fraction or key line test.
H - Halflife limit exceeded

---------- S U M M A R Y ----------

Total Activity (39.4 to 2490.9 keV) 6.876E+00 pCi/g

Laboratory: New World Technology

ORTEC g v - i (3263) Wan32 G53W2.10 10-FEB-2009 17:07:04
New World Technology Spectrum name: 3N000287.An1

Sample description
Parcel D 70-PDT-119-57 341g
2/03/09 13:25

Acquisition information
Start time: 10-Feb-2009 16:21:55
Live time: 2700
Real time: 2702

- -

***** S U M M A R Y O F N U C L I D E S I N S A M P L E *****

Nuclide		Time of Count Activity pCi/g	Uncertainty 2 Sigma Counting pCi/g	Total pCi/g	MDA pCi/g
Ac-228	F	7.9758E-01	2.5993E-01	2.6458E-01	0.250E+00
AM-241	#B	-2.7001E-02	3.0433E-01	3.0434E-01	0.103E+00
Bi-212	F	8.0137E-01	4.1378E-01	4.1670E-01	0.281E+00
BI-214	F	8.0128E-01	1.6931E-01	1.7617E-01	0.866E-01
CO-60	#B	-9.2132E-04	8.5726E-03	8.5728E-03	0.512E-01
CS-137	B	3.8927E-03	4.1841E-02	4.1842E-02	0.401E-01
EU-152	B	8.8609E-02	1.3490E-01	1.3504E-01	0.954E-01
EU-154	F	6.3752E-02	8.7862E-02	8.7977E-02	0.578E-01
K-40		7.6320E+00	1.3838E+00	1.4629E+00	0.503E+00
Pa-234	F	1.7443E-01	1.0915E-01	1.0996E-01	0.150E+00
Pb-210	#B	-2.0522E+00	7.2280E+00	7.2297E+00	0.128E+01
Pb-212		1.1152E+00	1.4847E-01	1.6510E-01	0.856E-01
PB-214		5.7266E-01	1.9426E-01	1.9759E-01	0.112E+00
RA-226	B	9.7120E-01	1.3660E+00	1.3675E+00	0.111E+01
Th-230	#B	2.8893E+00	2.4514E+01	2.4517E+01	0.104E+02
Th-234	F	1.8144E+00	9.5176E-01	9.7136E-01	0.710E+00
Tl-208	F	2.6717E-01	1.3182E-01	1.3281E-01	0.451E-01
U-235	B	-1.4409E-01	3.8753E-01	3.8764E-01	0.775E-01

- All peaks for activity calculation had bad shape.
* - Activity omitted from total
& - Activity omitted from total and all peaks had bad shape.
< - MDA value printed.
A - Activity printed, but activity < MDA.
B - Activity < MDA and failed test.
C - Area < Critical level.
F - Failed fraction or key line test.
H - Halflife limit exceeded

---------- S U M M A R Y ----------

Total Activity (39.2 to 2494.9 keV) 1.380E+01 pCi/g

Laboratory: New World Technology

ORTEC g v - i (3263) wan32 G53W2.06 10-FEB-2009 16:11:52
New World Technology Spectrum name: 6N000215.An1

Sample description
Parcel D 70-PDT-119-58 347g
2/03/09 13:20

Acquisition information
Start time: 10-Feb-2009 15:26:40
Live time: 2700
Real time: 2705

- -

***** S U M M A R Y O F N U C L I D E S I N S A M P L E *****

Nuclide		Time of Count Activity pCi/g	Uncertainty 2 Sigma Counting pCi/g	Total pCi/g	MDA pCi/g
Ac-228		8.0831E-01	2.3877E-01	2.4064E-01	0.185E+00
AM-241	#A	4.3601E-02	1.2697E-01	1.2699E-01	0.955E-01
Bi-212	F	6.0033E-01	4.4790E-01	4.4845E-01	0.334E+00
BI-214		6.6631E-01	1.5611E-01	1.5805E-01	0.709E-01
CO-60	#F	6.0733E-02	5.2734E-02	5.2782E-02	0.276E-01
CS-137	B	1.4775E-02	3.9926E-02	3.9930E-02	0.312E-01
EU-152	B	5.9305E-02	3.2874E-02	3.2947E-02	0.104E+00
EU-154	B	4.5526E-02	4.2890E-02	4.2923E-02	0.567E-01
K-40	#	8.0214E+00	1.2233E+00	1.2589E+00	0.454E+00
Pa-234	#B	-2.7018E-02	2.1366E+02	2.1366E+02	0.922E-01
Pb-210	#B	-1.2319E-01	-1.2577E+00	-1.2577E+00	0.777E+00
Pb-212	F	8.0043E-01	1.1895E-01	1.2259E-01	0.708E-01
PB-214		4.2615E-01	1.4161E-01	1.4249E-01	0.895E-01
RA-226	B	1.7110E-01	1.1836E+00	1.1837E+00	0.984E+00
Th-230	#B	8.7921E-02	1.2487E+01	1.2487E+01	0.894E+01
Th-234	F	1.4096E+00	4.6695E-01	4.6985E-01	0.917E+00
Tl-208	F	3.4861E-01	1.0046E-01	1.0129E-01	0.306E-01
U-235	#B	-3.2755E-02	-6.2412E-02	-6.2424E-02	0.606E-01

- All peaks for activity calculation had bad shape.
* - Activity omitted from total
& - Activity omitted from total and all peaks had bad shape.
< - MDA value printed.
A - Activity printed, but activity < MDA.
B - Activity < MDA and failed test.
C - Area < Critical level.
F - Failed fraction or key line test.
H - Halflife limit exceeded

---------- S U M M A R Y ----------

Total Activity (43.5 to 2782.6 keV) 1.1732290E+01 pCi/g

Laboratory: New World Technology

ORTEC g v - i (3263) Wan32 G53W2.10 10-FEB-2009 16:15:27
New World Technology Spectrum name: 2N000198.An1

Sample description
Parcel D 70-PDT-119-59 337g
2/03/09 13:15

Acquisition information
Start time: 10-Feb-2009 15:30:16
Live time: 2700
Real time: 2704

- -

***** S U M M A R Y O F N U C L I D E S I N S A M P L E *****

Nuclide		Time of Count Activity pCi/g	Uncertainty Counting pCi/g	2 Sigma Total pCi/g	MDA pCi/g
Ac-228	F	4.8303E-01	1.8794E-01	1.9031E-01	0.231E+00
AM-241	#B	4.6761E-01	1.2542E+00	1.2548E+00	0.837E+00
Bi-212	#F	8.8384E-01	7.1372E-01	7.1578E-01	0.378E+00
BI-214	F	5.3913E-01	1.9416E-01	1.9690E-01	0.864E-01
CO-60	#B	-6.4447E-04	8.1777E-04	8.1872E-04	0.530E-01
CS-137		5.9273E-02	5.1837E-02	5.1963E-02	0.419E-01
EU-152	B	7.6223E-02	8.3235E-02	8.3409E-02	0.913E-01
EU-154	#B	4.7113E-02	1.0615E-01	1.0615E-01	0.874E-01
K-40		7.2168E+00	1.2494E+00	1.3276E+00	0.126E+00
Pa-234	B	1.2935E-01	1.2732E-01	1.2770E-01	0.216E+00
Pb-210	#F	0.0000E+00	4.9284E+00	4.9285E+00	0.000E+00
Pb-212	F	4.7528E-01	1.2429E-01	1.2804E-01	0.932E-01
PB-214	F	2.4814E-01	1.3909E-01	1.3997E-01	0.114E+00
RA-226	#B	-4.8880E-01	5.7559E+00	5.7560E+00	0.130E+01
Th-230	#B	2.3255E+00	7.4649E+01	7.4650E+01	0.329E+02
Th-234	#F	6.1028E+00	5.8404E+00	5.8768E+00	0.383E+01
Tl-208	F	3.2470E-01	1.1061E-01	1.1806E-01	0.454E-01
U-235	#B	-1.0235E-01	1.8275E-01	1.8287E-01	0.891E-01

- All peaks for activity calculation had bad shape.
* - Activity omitted from total
& - Activity omitted from total and all peaks had bad shape.
< - MDA value printed.
A - Activity printed, but activity < MDA.
B - Activity < MDA and failed test.
C - Area < Critical level.
F - Failed fraction or key line test.
H - Halflife limit exceeded

---------- S U M M A R Y ----------

Total Activity (43.2 to 2752.7 keV) 1.585E+01 pCi/g

Laboratory: New World Technology

ORTEC g v - i (3263) Wan32 G53W2.10 10-FEB-2009 16:05:59
New World Technology Spectrum name: 3N000286.An1

Sample description
Parcel D 70-PDT-119-60 346g
2/03/09 13:10

Acquisition information
Start time: 10-Feb-2009 14:35:46
Live time: 5400
Real time: 5405

- -

***** S U M M A R Y O F N U C L I D E S I N S A M P L E *****

Nuclide		Time of Count Activity pCi/g	Uncertainty 2 Sigma Counting pCi/g	Total pCi/g	MDA pCi/g
Ac-228	F	1.4854E+00	2.1457E-01	2.3346E-01	0.141E+00
AM-241	#B	-3.5820E-02	3.2419E-01	3.2421E-01	0.732E-01
Bi-212	F	1.0754E+00	4.3663E-01	4.4160E-01	0.239E+00
BI-214	F	9.7009E-01	1.3658E-01	1.4874E-01	0.531E-01
CO-60	#B	-3.6682E-03	4.1542E-02	4.1542E-02	0.365E-01
CS-137	B	4.6155E-03	4.0467E-02	4.0468E-02	0.362E-01
EU-152	#B	4.8830E-02	6.5733E-02	6.5823E-02	0.676E-01
EU-154	F	6.7735E-02	6.9830E-02	6.9830E-02	0.575E-01
K-40		8.5353E+00	9.8173E-01	1.1160E+00	0.151E+00
Pa-234	B	5.8473E-02	1.4991E-01	1.4998E-01	0.868E-01
Pb-210	#B	-1.5808E+00	2.1838E+00	2.1871E+00	0.812E+00
Pb-212		1.4569E+00	1.1745E-01	1.5065E-01	0.643E-01
PB-214		1.0047E+00	1.7806E-01	1.8900E-01	0.914E-01
RA-226	F	7.9256E-01	9.6543E-01	9.6679E-01	0.790E+00
Th-230	B	4.2364E+00	7.7334E+00	7.7540E+00	0.627E+01
Th-234	F	1.9307E+00	7.8297E-01	8.0978E-01	0.598E+00
Tl-208	F	5.6859E-01	7.7674E-02	8.4971E-02	0.281E-01
U-235	#B	-1.3912E-01	2.6512E-01	2.6527E-01	0.551E-01

- All peaks for activity calculation had bad shape.
* - Activity omitted from total
& - Activity omitted from total and all peaks had bad shape.
< - MDA value printed.
A - Activity printed, but activity < MDA.
B - Activity < MDA and failed test.
C - Area < Critical level.
F - Failed fraction or key line test.
H - Halflife limit exceeded

---------- S U M M A R Y ----------

Total Activity (39.2 to 2494.9 keV) 1.703E+01 pCi/g

Laboratory: New World Technology

ORTEC g v - i (3263) Wan32 G53W2.10 22-APR-2009 18:25:30
New World Technology Spectrum name: 2N000350.An1

Sample description
Parcel G 70-PGT-119-61 332g
4/20/09 13:07

Acquisition information
Start time: 22-Apr-2009 16:55:17
Live time: 5400
Real time: 5406

- -

***** S U M M A R Y O F N U C L I D E S I N S A M P L E *****

Nuclide		Activity pCi/g	Time of Count Uncertainty Counting pCi/g	2 Sigma Total pCi/g	MDA pCi/g
Ac-228	F	8.5320E-01	2.1061E-01	2.1713E-01	0.116E+00
AM-241	#B	-6.0379E-03	1.1847E-01	1.1847E-01	0.568E-01
Bi-212	F	3.0585E-01	3.6000E-01	3.6049E-01	0.251E+00
BI-214	F	7.5002E-01	1.3716E-01	1.4452E-01	0.527E-01
CO-60	#B	1.4329E-02	1.0504E-01	1.0505E-01	0.361E-01
CS-137	#B	-2.5528E-02	6.8976E-02	6.8994E-02	0.472E-01
EU-152	B	-1.7979E-02	1.7136E-01	1.7136E-01	0.637E-01
EU-154	#B	4.9681E-02	6.1962E-02	6.2061E-02	0.567E-01
K-40		1.0783E+01	1.0717E+00	1.2642E+00	0.620E-01
Pa-234	B	5.0415E-02	1.1580E-01	1.1586E-01	0.917E-01
Pb-210		1.2576E+00	9.0348E-01	9.0854E-01	0.636E+00
Pb-212	F	7.0391E-01	9.9062E-02	1.0905E-01	0.639E-01
PB-214		7.8206E-01	1.4363E-01	1.5187E-01	0.662E-01
RA-226		1.2931E+00	9.6421E-01	9.6782E-01	0.779E+00
Th-230	#B	-1.8700E-01	3.6132E+01	3.6132E+01	0.697E+01
Th-234	F	2.2910E+00	7.1622E-01	7.5702E-01	0.656E+00
Tl-208	#F	1.6138E-01	1.1579E-01	1.1620E-01	0.489E-01
U-235	F	5.1780E-02	7.2091E-02	7.2168E-02	0.441E-01

- All peaks for activity calculation had bad shape.
* - Activity omitted from total
& - Activity omitted from total and all peaks had bad shape.
< - MDA value printed.
A - Activity printed, but activity < MDA.
B - Activity < MDA and failed test.
C - Area < Critical level.
F - Failed fraction or key line test.
H - Halflife limit exceeded

---------- S U M M A R Y ----------

Total Activity (40.6 to 2592.1 keV) 1.887E+01 pCi/g

Laboratory: New World Technology

ORTEC g v - i (3263) Wan32 G53W2.10 22-APR-2009 16:52:58
New World Technology Spectrum name: 3N000594.An1

Sample description
Parcel G 70-PGT-119-62 329g
4/20/09 13:02

Acquisition information
Start time: 22-Apr-2009 16:07:49
Live time: 2700
Real time: 2703

- -

***** S U M M A R Y O F N U C L I D E S I N S A M P L E *****

Nuclide		Activity pCi/g	Time of Count Uncertainty Counting pCi/g	2 Sigma Total pCi/g	MDA pCi/g
Ac-228	F	3.4583E-01	2.0057E-01	2.0171E-01	0.147E+00
AM-241	#B	6.1778E-02	1.4874E-01	1.4883E-01	0.102E+00
Bi-212	B	-1.2616E-01	5.0465E+00	5.0465E+00	0.275E+00
BI-214	#F	7.0945E-01	1.7018E-01	1.7555E-01	0.535E-01
CO-60	#B	5.6292E-03	7.4213E-03	7.4293E-03	0.565E-01
CS-137		5.4696E-02	4.5910E-02	4.6032E-02	0.306E-01
EU-152	#B	7.8566E-02	5.2377E-02	5.2670E-02	0.973E-01
EU-154	#B	5.3966E-02	1.2910E-01	1.2915E-01	0.725E-01
K-40		9.8073E+00	1.4346E+00	1.5588E+00	0.122E+00
Pa-234	#B	7.2804E-03	2.5588E-02	2.5594E-02	0.114E+00
Pb-210	#B	5.6144E-01	2.8003E+00	2.8006E+00	0.122E+01
Pb-212		4.2506E-01	1.0191E-01	1.0556E-01	0.669E-01
PB-214	F	3.9946E-01	1.1049E-01	1.1332E-01	0.727E-01
RA-226	B	6.3038E-01	1.1702E+00	1.1709E+00	0.956E+00
Th-230	#B	-2.8501E+00	1.1401E+02	1.1401E+02	0.761E+01
Th-234	B	7.0822E-01	8.1229E-01	8.1582E-01	0.719E+00
Tl-208	F	2.9188E-01	8.7695E-02	8.9460E-02	0.308E-01
U-235	B	4.5908E-02	6.5271E-02	6.5338E-02	0.557E-01

- All peaks for activity calculation had bad shape.
* - Activity omitted from total
& - Activity omitted from total and all peaks had bad shape.
< - MDA value printed.
A - Activity printed, but activity < MDA.
B - Activity < MDA and failed test.
C - Area < Critical level.
F - Failed fraction or key line test.
H - Halflife limit exceeded

---------- S U M M A R Y ----------

Total Activity (39.2 to 2494.9 keV) 1.203E+01 pCi/g

Laboratory: New World Technology

ORTEC g v - i (3263) Wan32 G53W2.12 4/22/2009 5:00:33 PM
New World Technology Spectrum name: 6N000473.An1

Sample description
Parcel G 70-PGT-119-63 344g
4/20/09 10:50

Acquisition information
Start time: 4/22/2009 4:15:20 PM
Live time: 2700
Real time: 2706

- -

***** S U M M A R Y O F N U C L I D E S I N S A M P L E *****

Nuclide		Activity pCi/g	Time of Count Uncertainty Counting pCi/g	2 Sigma Total pCi/g	MDA pCi/g
Ac-228	B	1.3983E-01	1.2290E-01	1.2320E-01	0.202E+00
AM-241	A	7.3135E-03	9.9981E-02	9.9983E-02	0.822E-01
Bi-212	F	6.3222E-01	3.6979E-01	3.7183E-01	0.237E+00
BI-214		4.9668E-01	1.7226E-01	1.7488E-01	0.763E-01
CO-60	B	2.3975E-02	2.8322E-02	2.8360E-02	0.289E-01
CS-137	B	1.0892E-02	4.7274E-02	4.7279E-02	0.386E-01
EU-152	B	7.9485E-02	9.2969E-02	9.3138E-02	0.844E-01
EU-154	B	4.0916E-02	5.5528E-02	5.5603E-02	0.601E-01
K-40		1.4760E+01	1.5743E+00	1.8223E+00	0.160E+00
Pa-234	F	1.6047E-01	1.6692E-01	1.6736E-01	0.821E-01
Pb-210	#B	-7.9821E-01	2.2165E+00	2.2174E+00	0.924E+00
Pb-212	F	2.5579E-01	8.9577E-02	9.1095E-02	0.661E-01
PB-214	F	4.8558E-01	1.7548E-01	1.7813E-01	0.824E-01
RA-226	B	1.5971E-01	1.0592E+00	1.0593E+00	0.881E+00
Th-230	#F	8.0986E+00	8.3647E+00	8.4343E+00	0.606E+01
Th-234	F	1.0039E+00	1.1176E+00	1.1227E+00	0.858E+00
Tl-208	F	1.3616E-01	1.4918E-01	1.5018E-01	0.398E-01
U-235	F	1.1253E-01	5.2878E-02	5.3375E-02	0.374E-01

- All peaks for activity calculation had bad shape.
* - Activity omitted from total
& - Activity omitted from total and all peaks had bad shape.
< - MDA value printed.
A - Activity printed, but activity < MDA.
B - Activity < MDA and failed test.
C - Area < Critical level.
F - Failed fraction or key line test.
H - Halflife limit exceeded

---------- S U M M A R Y ----------

Total Activity (43.6 to 2783.8 keV) 1.674E+01 pCi/g

Laboratory: New World Technology

ORTEC g v - i (3263) Wan32 G53W2.12 4/22/2009 4:11:10 PM
New World Technology Spectrum name: 6N000472.An1

Sample description
Parcel G 70-PGT-119-64 335g
4/20/09 11:00

Acquisition information
Start time: 4/22/2009 2:07:41 PM
Live time: 2700
Real time: 2706

- -

***** S U M M A R Y O F N U C L I D E S I N S A M P L E *****

Nuclide		Time of Count Activity pCi/g	Uncertainty Counting pCi/g	2 Sigma Total pCi/g	MDA pCi/g
Ac-228	F	4.1714E-01	2.3160E-01	2.3304E-01	0.172E+00
AM-241	A	7.9467E-03	9.4003E-02	9.4006E-02	0.772E-01
Bi-212	F	5.6298E-01	3.7379E-01	3.7539E-01	0.248E+00
BI-214		6.2906E-01	2.2694E-01	2.3013E-01	0.955E-01
CO-60	#B	1.6514E-02	1.5206E-01	1.5206E-01	0.494E-01
CS-137	F	4.3269E-02	5.2241E-02	5.2308E-02	0.397E-01
EU-152	F	2.4293E-01	9.1137E-02	9.2738E-02	0.991E-01
EU-154	F	8.5414E-02	8.8200E-02	8.8406E-02	0.726E-01
K-40		1.1906E+01	1.4342E+00	1.6141E+00	0.164E+00
Pa-234	F	1.4441E-01	1.6524E-01	1.6561E-01	0.999E-01
Pb-210	#B	-4.1719E-01	3.3536E+00	3.3538E+00	0.115E+01
Pb-212	F	5.6436E-01	1.1785E-01	1.2338E-01	0.724E-01
PB-214	F	5.3591E-01	1.7321E-01	1.7648E-01	0.858E-01
RA-226	B	5.8638E-01	1.0513E+00	1.0520E+00	0.857E+00
Th-230	B	2.8735E+00	1.0451E+01	1.0458E+01	0.857E+01
Th-234	B	3.7016E-01	8.0269E-01	8.0367E-01	0.838E+00
Tl-208	F	1.4945E-01	6.4995E-02	6.7717E-02	0.748E-01
U-235	F	7.8084E-02	5.9323E-02	5.9537E-02	0.451E-01

- All peaks for activity calculation had bad shape.
* - Activity omitted from total
& - Activity omitted from total and all peaks had bad shape.
< - MDA value printed.
A - Activity printed, but activity < MDA.
B - Activity < MDA and failed test.
C - Area < Critical level.
F - Failed fraction or key line test.
H - Halflife limit exceeded

---------- S U M M A R Y ----------

Total Activity (43.6 to 2783.8 keV) 1.484E+01 pCi/g

Laboratory: New World Technology

ORTEC g v - i (3263) Wan32 G53W2.10 22-APR-2009 19:11:16
New World Technology Spectrum name: 1N000574.An1

Sample description
Parcel G 70-PGT-119-65 334g
4/20/09 11:04

Acquisition information
Start time: 22-Apr-2009 17:38:21
Live time: 5400
Real time: 5403

- -

***** S U M M A R Y O F N U C L I D E S I N S A M P L E *****

Nuclide		Activity pCi/g	Time of Count Uncertainty Counting pCi/g	2 Sigma Total pCi/g	MDA pCi/g
Ac-228	F	2.3503E-01	8.5776E-02	8.7007E-02	0.170E+00
AM-241	#A	-8.9597E-03	2.4731E-01	2.4731E-01	0.548E-01
Bi-212	#B	2.1315E-01	1.8819E-01	1.8865E-01	0.245E+00
BI-214	F	5.2420E-01	1.1671E-01	1.2099E-01	0.440E-01
CO-60	#B	-1.5754E-02	1.3380E-01	1.3380E-01	0.371E-01
CS-137		3.4667E-02	3.2290E-02	3.2360E-02	0.236E-01
EU-152	#A	-2.6020E-02	1.0408E+00	1.0408E+00	0.370E-01
EU-154	#A	6.4818E-03	3.7080E-02	3.7083E-02	0.351E-01
K-40		1.1651E+01	1.2043E+00	1.4054E+00	0.252E+00
Pa-234	F	6.4081E-02	5.5689E-02	5.5901E-02	0.507E-01
Pb-210	#F	6.4935E-01	1.1857E+00	1.1868E+00	0.571E+00
Pb-212	F	4.8337E-01	7.2938E-02	7.9370E-02	0.451E-01
Pb-214		4.2590E-01	9.4050E-02	9.7810E-02	0.429E-01
RA-226	F	6.8106E-01	6.9109E-01	6.9249E-01	0.553E+00
Th-230	B	2.5762E+00	5.3097E+00	5.3208E+00	0.427E+01
Th-234	B	2.5942E-01	5.4063E-01	5.4134E-01	0.501E+00
Tl-208	F	1.1833E-01	4.9664E-02	5.0181E-02	0.340E-01
U-235	F	8.2650E-02	3.9582E-02	3.9940E-02	0.290E-01

- All peaks for activity calculation had bad shape.
* - Activity omitted from total
& - Activity omitted from total and all peaks had bad shape.
< - MDA value printed.
A - Activity printed, but activity < MDA.
B - Activity < MDA and failed test.
C - Area < Critical level.
F - Failed fraction or key line test.
H - Halflife limit exceeded

---------- S U M M A R Y ----------

Total Activity (39.3 to 2489.2 keV) 1.338E+01 pCi/g

Laboratory: New World Technology

ORTEC g v - i (3263) Wan32 G53W2.10 22-APR-2009 19:19:45
New World Technology Spectrum name: 3N000595.An1

Sample description
Parcel G 70-PGT-119-66 349g
4/20/09 11:07

Acquisition information
Start time: 22-Apr-2009 17:46:28
Live time: 5400
Real time: 5408

- -

***** S U M M A R Y O F N U C L I D E S I N S A M P L E *****

Nuclide		Activity pCi/g	Time of Count Uncertainty Counting pCi/g	2 Sigma Total pCi/g	MDA pCi/g
Ac-228	F	1.2802E+00	2.0352E-01	2.1842E-01	0.593E-01
AM-241	#B	1.0240E-02	8.3335E-02	8.3339E-02	0.637E-01
Bi-212	F	7.2659E-01	3.4313E-01	3.4602E-01	0.241E+00
BI-214	F	1.0141E+00	1.5991E-01	1.7136E-01	0.565E-01
CO-60	#B	-1.9216E-02	3.5067E-01	3.5068E-01	0.397E-01
CS-137		4.3810E-02	3.7927E-02	3.8021E-02	0.282E-01
EU-152	#F	1.3040E-01	8.1686E-02	8.2203E-02	0.561E-01
EU-154	B	2.5396E-02	6.7487E-02	6.7511E-02	0.506E-01
K-40		1.1023E+01	1.1094E+00	1.3041E+00	0.154E+00
Pa-234	#B	-1.8715E-02	2.5340E-02	2.5380E-02	0.710E-01
Pb-210	B	4.4190E-01	7.1889E-01	7.1968E-01	0.596E+00
Pb-212	F	9.4409E-01	1.0090E-01	1.1798E-01	0.604E-01
PB-214		7.9863E-01	1.3366E-01	1.4284E-01	0.649E-01
RA-226		1.1837E+00	8.2715E-01	8.3068E-01	0.657E+00
Th-230	B	1.3026E+00	6.9627E+00	6.9649E+00	0.578E+01
Th-234		1.2513E+00	6.4651E-01	6.6024E-01	0.596E+00
Tl-208	F	3.8577E-01	6.6382E-02	7.0377E-02	0.246E-01
U-235	B	2.6919E-02	6.1967E-02	6.1991E-02	0.445E-01

- All peaks for activity calculation had bad shape.
* - Activity omitted from total
& - Activity omitted from total and all peaks had bad shape.
< - MDA value printed.
A - Activity printed, but activity < MDA.
B - Activity < MDA and failed test.
C - Area < Critical level.
F - Failed fraction or key line test.
H - Halflife limit exceeded

---------- S U M M A R Y ----------

Total Activity (39.2 to 2494.9 keV) 1.865E+01 pCi/g

Laboratory: New World Technology

ORTEC g v - i (3263) Wan32 G53W2.12 4/22/2009 6:06:32 PM
New World Technology Spectrum name: 6N000474.An1

Sample description
Parcel G 70-PGT-119-67 350g
4/20/09 11:14

Acquisition information
Start time: 4/22/2009 5:04:50 PM
Live time: 2700
Real time: 2705

- -

***** S U M M A R Y O F N U C L I D E S I N S A M P L E *****

Nuclide		Activity pCi/g	Time of Count Uncertainty Counting pCi/g	2 Sigma Total pCi/g	MDA pCi/g
Ac-228	F	6.0408E-01	2.2336E-01	2.2648E-01	0.170E+00
AM-241		1.6124E-01	1.4772E-01	1.4832E-01	0.953E-01
Bi-212	#	9.2180E-01	3.8694E-01	3.9106E-01	0.146E+00
BI-214	#	4.3858E-01	2.0847E-01	2.1016E-01	0.710E-01
CO-60	#B	1.9775E-03	1.1464E-02	1.1465E-02	0.105E-01
CS-137	B	1.5084E-02	3.5211E-02	3.5223E-02	0.280E-01
EU-152	#B	7.6823E-02	7.1306E-02	7.1512E-02	0.907E-01
EU-154	#B	8.1655E-03	1.5103E-01	1.5103E-01	0.545E-01
K-40	#	1.0126E+01	1.3456E+00	1.4857E+00	0.247E+00
Pa-234	#F	3.5871E-01	1.3999E-01	1.4263E-01	0.118E+00
Pb-210	#B	-1.0625E+00	3.3165E+00	3.3175E+00	0.972E+00
Pb-212	F	4.5188E-01	9.5869E-02	1.0024E-01	0.627E-01
PB-214	F	4.5279E-01	1.3238E-01	1.3543E-01	0.651E-01
RA-226	B	6.8515E-01	1.0467E+00	1.0476E+00	0.848E+00
Th-230	#B	1.1963E+00	7.4621E+00	7.4638E+00	0.603E+01
Th-234	#B	7.0800E-01	9.0036E-01	9.0355E-01	0.804E+00
Tl-208	#F	1.8279E-01	6.0063E-02	6.4403E-02	0.495E-01
U-235	F	6.9703E-02	6.7453E-02	6.7603E-02	0.510E-01

- All peaks for activity calculation had bad shape.
* - Activity omitted from total
& - Activity omitted from total and all peaks had bad shape.
< - MDA value printed.
A - Activity printed, but activity < MDA.
B - Activity < MDA and failed test.
C - Area < Critical level.
F - Failed fraction or key line test.
H - Halflife limit exceeded

---------- S U M M A R Y ----------

Total Activity (43.6 to 2783.8 keV) 1.377E+01 pCi/g

Laboratory: New World Technology

ORTEC g v - i (3263) Npp32 G53W3.10 23-APR-2009 10:38:15
New World Technology Spectrum name: 1N000576.An1

Sample description
Parcel G 70-PGT-119-68 343g
4/20/09 11:20

Acquisition information
Start time: 23-Apr-2009 09:46:04
Live time: 2700
Real time: 2703

- -

***** S U M M A R Y O F N U C L I D E S I N S A M P L E *****

Nuclide		Activity pCi/g	Time of Count Uncertainty Counting pCi/g	2 Sigma Total pCi/g	MDA pCi/g
Ac-228	F	4.0368E-01	1.5624E-01	1.5823E-01	0.182E+00
AM-241	#A	1.4876E-02	6.3939E-02	6.3951E-02	0.694E-01
Bi-212	F	4.0415E-01	2.1442E-01	2.1586E-01	0.381E+00
BI-214	F	3.8846E-01	1.2788E-01	1.3004E-01	0.709E-01
CO-60	F	5.0833E-02	4.0353E-02	4.0473E-02	0.378E-01
CS-137	B	3.3993E-02	3.5346E-02	3.5407E-02	0.358E-01
EU-152	A	3.1502E-02	6.0386E-02	6.0426E-02	0.600E-01
EU-154	A	-2.8680E-03	7.1953E-03	7.1981E-03	0.524E-01
K-40		6.3495E+00	1.0733E+00	1.1436E+00	0.181E+00
Pa-234	#F	1.2081E-01	6.1558E-02	6.2238E-02	0.949E-01
Pb-210		1.3629E+00	7.8026E-01	7.8719E-01	0.743E+00
Pb-212	F	2.7260E-01	9.1821E-02	9.3502E-02	0.863E-01
Pb-214	B	9.1510E-02	6.2811E-02	6.3075E-02	0.948E-01
RA-226	B	8.1083E-01	9.6968E-01	9.7109E-01	0.999E+00
Th-230	#B	5.7915E+00	8.3579E+00	8.3935E+00	0.707E+01
Th-234	#B	2.5931E-01	8.8528E-01	8.8572E-01	0.892E+00
Tl-208	F	1.8039E-01	5.8132E-02	5.9154E-02	0.313E-01
U-235	F	1.2764E-01	5.7262E-02	5.7851E-02	0.497E-01

- All peaks for activity calculation had bad shape.
* - Activity omitted from total
& - Activity omitted from total and all peaks had bad shape.
< - MDA value printed.
A - Activity printed, but activity < MDA.
B - Activity < MDA and failed test.
C - Area < Critical level.
F - Failed fraction or key line test.
H - Halflife limit exceeded

---------- S U M M A R Y ----------

Total Activity (39.3 to 2489.2 keV) 9.752E+00 pCi/g

Laboratory: New World Technology

ORTEC g v - i (3263) Npp32 G53W3.10 23-APR-2009 14:07:56
New World Technology Spectrum name: 1N000578.An1

Sample description
Parcel G 70-PGT-119-68DUP 343g
4/20/09 11:20

Acquisition information
Start time: 23-Apr-2009 13:09:39
Live time: 2700
Real time: 2701

- -

***** S U M M A R Y O F N U C L I D E S I N S A M P L E *****

Nuclide		Activity pCi/g	Time of Count Uncertainty Counting pCi/g	2 Sigma Total pCi/g	MDA pCi/g
Ac-228	F	4.0223E-01	1.8684E-01	1.8850E-01	0.198E+00
AM-241	#A	4.1496E-02	6.9043E-02	6.9129E-02	0.693E-01
Bi-212	F	4.8933E-01	3.3437E-01	3.3573E-01	0.365E+00
BI-214	#F	4.3497E-01	1.3428E-01	1.3686E-01	0.747E-01
CO-60	#B	5.4092E-04	9.0398E-03	9.0399E-03	0.221E-01
CS-137	#B	-8.5677E-04	2.7518E-02	2.7518E-02	0.142E-01
EU-152	A	4.1260E-02	6.4634E-02	6.4698E-02	0.755E-01
EU-154	#A	-3.3453E-02	3.2146E+00	3.2146E+00	0.522E-01
K-40		7.1659E+00	1.1402E+00	1.2242E+00	0.181E+00
Pa-234	#F	9.3713E-02	1.0015E-01	1.0040E-01	0.865E-01
Pb-210	B	5.1657E-01	7.5289E-01	7.5393E-01	0.835E+00
Pb-212	F	2.7515E-01	8.5198E-02	8.7041E-02	0.800E-01
Pb-214	F	2.7319E-01	1.1498E-01	1.1626E-01	0.872E-01
RA-226	B	6.7336E-01	9.5318E-01	9.5417E-01	0.991E+00
Th-230	#B	2.5301E+00	6.2686E+00	6.2777E+00	0.607E+01
Th-234	B	3.1281E-01	7.8865E-01	7.8936E-01	0.855E+00
Tl-208	F	1.9418E-01	6.9347E-02	7.0341E-02	0.399E-01
U-235	F	1.0638E-01	5.4879E-02	5.5306E-02	0.508E-01

- All peaks for activity calculation had bad shape.
* - Activity omitted from total
& - Activity omitted from total and all peaks had bad shape.
< - MDA value printed.
A - Activity printed, but activity < MDA.
B - Activity < MDA and failed test.
C - Area < Critical level.
F - Failed fraction or key line test.
H - Halflife limit exceeded

---------- S U M M A R Y ----------

Total Activity (39.3 to 2489.2 keV) 9.341E+00 pCi/g

Laboratory: New World Technology

ORTEC g v - i (3263) Wan32 G53W2.12 4/22/2009 8:49:54 PM
New World Technology Spectrum name: 6N000475.An1

Sample description
Parcel G 70-PGT-119-69 354g
4/20/09 11:33

Acquisition information
Start time: 4/22/2009 7:19:35 PM
Live time: 5400
Real time: 5411

- -

***** S U M M A R Y O F N U C L I D E S I N S A M P L E *****

Nuclide		Time of Count Activity pCi/g	Uncertainty 2 Sigma Counting pCi/g	Total pCi/g	MDA pCi/g
Ac-228	F	4.1226E-01	1.8559E-01	1.8734E-01	0.129E+00
AM-241	#A	6.0540E-02	9.3632E-02	9.3767E-02	0.652E-01
Bi-212	F	8.8142E-01	3.9020E-01	3.9394E-01	0.186E+00
BI-214		4.4560E-01	1.1341E-01	1.1659E-01	0.507E-01
CO-60	#B	-6.4641E-03	1.4228E-01	1.4228E-01	0.340E-01
CS-137	B	1.3952E-02	3.0250E-02	3.0262E-02	0.244E-01
EU-152	B	6.2384E-02	6.4128E-02	6.4279E-02	0.649E-01
EU-154	#B	1.7026E-02	6.6515E-02	6.6526E-02	0.369E-01
K-40		1.2617E+01	1.1151E+00	1.3634E+00	0.230E+00
Pa-234	B	2.2495E-02	5.1955E-02	5.1984E-02	0.981E-01
Pb-210	#B	-1.8362E-01	1.0908E+00	1.0909E+00	0.684E+00
Pb-212	F	4.2912E-01	6.9343E-02	7.4704E-02	0.468E-01
PB-214	F	4.6144E-01	1.1364E-01	1.1731E-01	0.677E-01
RA-226	F	7.7442E-01	7.9985E-01	8.0141E-01	0.647E+00
Th-230	F	5.5379E+00	7.5225E+00	7.5588E+00	0.528E+01
Th-234	B	5.9186E-01	6.6433E-01	6.6734E-01	0.634E+00
Tl-208	F	1.6747E-01	4.4012E-02	4.8893E-02	0.262E-01
U-235	F	4.3056E-02	4.3539E-02	4.3628E-02	0.347E-01

- All peaks for activity calculation had bad shape.
* - Activity omitted from total
& - Activity omitted from total and all peaks had bad shape.
< - MDA value printed.
A - Activity printed, but activity < MDA.
B - Activity < MDA and failed test.
C - Area < Critical level.
F - Failed fraction or key line test.
H - Halflife limit exceeded

---------- S U M M A R Y ----------

Total Activity (43.6 to 2783.8 keV) 1.541E+01 pCi/g

Laboratory: New World Technology

ORTEC g v - i (3263) Wan32 G53W2.10 22-APR-2009 19:20:46
New World Technology Spectrum name: 2N000351.An1

Sample description
Parcel G 70-PGT-119-70 344g
4/20/09 11:40

Acquisition information
Start time: 22-Apr-2009 18:35:37
Live time: 2700
Real time: 2703

- -

***** S U M M A R Y O F N U C L I D E S I N S A M P L E *****

Nuclide		Time of Count Activity pCi/g	Uncertainty Counting pCi/g	2 Sigma Total pCi/g	MDA pCi/g
Ac-228	F	4.4560E-01	2.2063E-01	2.2235E-01	0.187E+00
AM-241	#B	2.3995E-03	6.6387E-02	6.6387E-02	0.605E-01
Bi-212	F	3.9824E-01	4.4234E-01	4.4302E-01	0.357E+00
BI-214	F	2.5065E-01	3.1660E-01	3.1696E-01	0.897E-01
CO-60	#B	1.0186E-02	1.2353E-01	1.2354E-01	0.425E-01
CS-137	#B	-2.2233E-02	6.9434E-02	6.9447E-02	0.551E-01
EU-152	#B	-1.7074E-02	2.4800E-01	2.4800E-01	0.112E+00
EU-154	F	8.3899E-02	6.8018E-02	6.8275E-02	0.666E-01
K-40		9.4826E+00	1.3964E+00	1.5158E+00	0.120E+00
Pa-234	#F	1.9174E-01	1.8976E-01	1.9032E-01	0.422E-01
Pb-210	#F	1.0552E+00	2.0101E+00	2.0117E+00	0.931E+00
Pb-212	F	3.9469E-01	1.1127E-01	1.1416E-01	0.784E-01
PB-214	F	3.7858E-01	1.3853E-01	1.4057E-01	0.855E-01
RA-226	B	3.0150E-01	1.3743E+00	1.3744E+00	0.115E+01
Th-230	#B	3.1900E+00	2.0836E+01	2.0840E+01	0.925E+01
Th-234	F	1.0469E+00	8.6954E-01	8.7673E-01	0.800E+00
Tl-208	F	7.2382E-02	7.2640E-02	7.2772E-02	0.546E-01
U-235	F	1.4313E-01	7.5157E-02	7.5724E-02	0.547E-01

- All peaks for activity calculation had bad shape.
* - Activity omitted from total
& - Activity omitted from total and all peaks had bad shape.
< - MDA value printed.
A - Activity printed, but activity < MDA.
B - Activity < MDA and failed test.
C - Area < Critical level.
F - Failed fraction or key line test.
H - Halflife limit exceeded

---------- S U M M A R Y ----------

Total Activity (40.6 to 2592.1 keV) 1.084E+01 pCi/g

Laboratory: New World Technology

ORTEC g v - i (3263) Npp32 G53W3.10 23-APR-2009 09:02:50
New World Technology Spectrum name: 1N000575.An1

Sample description
Parcel G 70-PGT-119-71 344g
4/20/09 11:50

Acquisition information
Start time: 23-Apr-2009 07:34:10
Live time: 2700
Real time: 2702

- -

***** S U M M A R Y O F N U C L I D E S I N S A M P L E *****

Nuclide		Activity pCi/g	Time of Count Uncertainty Counting pCi/g	2 Sigma Total pCi/g	MDA pCi/g
Ac-228	B	8.1317E-02	8.1945E-02	8.2100E-02	0.189E+00
AM-241	#A	2.5839E-02	4.0180E-02	4.0237E-02	0.469E-01
Bi-212	#B	-2.6923E-01	1.4190E+00	1.4190E+00	0.395E+00
BI-214	F	2.5483E-01	1.0689E-01	1.0801E-01	0.631E-01
CO-60	#B	3.0286E-03	1.3120E-02	1.3121E-02	0.239E-01
CS-137	B	1.6325E-02	3.0063E-02	3.0080E-02	0.337E-01
EU-152	#A	8.7769E-03	1.5418E-02	1.5430E-02	0.590E-01
EU-154	#A	3.0656E-02	2.5030E-02	2.5122E-02	0.470E-01
K-40	#F	2.7379E+00	8.4000E-01	8.5709E-01	0.428E+00
Pa-234	#F	1.1674E-01	6.4081E-02	6.4691E-02	0.627E-01
Pb-210	B	3.2821E-01	7.0674E-01	7.0718E-01	0.730E+00
Pb-212	B	2.5557E-02	2.2100E-02	2.2162E-02	0.897E-01
Pb-214	F	1.9069E-01	8.6905E-02	8.7733E-02	0.599E-01
RA-226	B	8.2625E-01	8.5806E-01	8.5972E-01	0.881E+00
Th-230	#B	1.9638E+00	5.0300E+00	5.0368E+00	0.487E+01
Th-234	B	4.8608E-01	8.6663E-01	8.6819E-01	0.827E+00
Tl-208	#F	1.5518E-01	5.0848E-02	5.1713E-02	0.237E-01
U-235	F	1.0910E-01	5.2286E-02	5.2758E-02	0.462E-01

- All peaks for activity calculation had bad shape.
* - Activity omitted from total
& - Activity omitted from total and all peaks had bad shape.
< - MDA value printed.
A - Activity printed, but activity < MDA.
B - Activity < MDA and failed test.
C - Area < Critical level.
F - Failed fraction or key line test.
H - Halflife limit exceeded

---------- S U M M A R Y ----------

Total Activity (39.3 to 2489.2 keV) 3.621E+00 pCi/g

Laboratory: New World Technology

ORTEC g v - i (3263) Wan32 G53W2.10 22-APR-2009 20:08:13
New World Technology Spectrum name: 3N000596.An1

Sample description
Parcel G 70-PGT-119-72 360g
4/20/09 12:45

Acquisition information
Start time: 22-Apr-2009 19:23:02
Live time: 2700
Real time: 2704

- -

***** S U M M A R Y O F N U C L I D E S I N S A M P L E *****

Nuclide		Time of Count Activity pCi/g	Uncertainty Counting pCi/g	2 Sigma Total pCi/g	MDA pCi/g
Ac-228	F	3.8912E-01	1.8105E-01	1.8265E-01	0.159E+00
AM-241	#B	-1.9920E-02	3.4938E-01	3.4938E-01	0.660E-01
Bi-212	B	-1.1120E-01	1.8852E+01	1.8852E+01	0.308E+00
BI-214	F	5.4923E-01	1.5856E-01	1.6203E-01	0.565E-01
CO-60	#B	-7.4353E-03	1.3961E+00	1.3961E+00	0.489E-01
CS-137	#B	-1.5545E-03	8.1614E-02	8.1614E-02	0.331E-01
EU-152	B	1.7253E-02	3.1839E-01	3.1839E-01	0.851E-01
EU-154	#B	3.6197E-02	3.8421E-02	3.8506E-02	0.609E-01
K-40		8.0089E+00	1.3083E+00	1.3999E+00	0.221E+00
Pa-234	#B	5.8233E-02	4.3845E-02	4.4069E-02	0.129E+00
Pb-210	#	1.8513E+00	1.3475E+00	1.3548E+00	0.796E+00
Pb-212	F	3.5625E-01	1.0486E-01	1.0737E-01	0.716E-01
PB-214	F	3.8245E-01	1.4664E-01	1.4861E-01	0.705E-01
RA-226	B	7.9168E-01	1.0262E+00	1.0275E+00	0.827E+00
Th-230	F	6.6579E+00	8.2206E+00	8.2685E+00	0.657E+01
Th-234	#B	4.8855E-01	1.2594E+00	1.2605E+00	0.829E+00
Tl-208	F	1.8934E-01	5.8732E-02	5.9842E-02	0.210E-01
U-235	B	4.0209E-02	6.6306E-02	6.6357E-02	0.439E-01

- All peaks for activity calculation had bad shape.
* - Activity omitted from total
& - Activity omitted from total and all peaks had bad shape.
< - MDA value printed.
A - Activity printed, but activity < MDA.
B - Activity < MDA and failed test.
C - Area < Critical level.
F - Failed fraction or key line test.
H - Halflife limit exceeded

---------- S U M M A R Y ----------

Total Activity (39.2 to 2494.9 keV) 1.173E+01 pCi/g

Laboratory: New World Technology

ORTEC g v - i (3263) Wan32 G53W2.10 22-APR-2009 20:11:00
New World Technology Spectrum name: 2N000352.An1

Sample description
Parcel G 70-PGT-119-73 390g
4/20/09 12:36

Acquisition information
Start time: 22-Apr-2009 19:25:51
Live time: 2700
Real time: 2703

- -

***** S U M M A R Y O F N U C L I D E S I N S A M P L E *****

Nuclide		Time of Count Activity pCi/g	Uncertainty 2 Sigma Counting pCi/g	Total pCi/g	MDA pCi/g
Ac-228	F	2.2314E+00	4.3525E-01	4.5666E-01	0.230E+00
AM-241	#B	-2.4188E-03	6.1112E-02	6.1112E-02	0.492E-01
Bi-212	F	1.7526E+00	6.5212E-01	6.6095E-01	0.419E+00
BI-214	F	1.4872E+00	2.4611E-01	2.6216E-01	0.907E-01
CO-60	#B	-2.4840E-03	4.3249E-01	4.3249E-01	0.559E-01
CS-137	B	2.0150E-03	6.7689E-02	6.7689E-02	0.637E-01
EU-152	B	2.6738E-02	1.3949E-01	1.3951E-01	0.125E+00
EU-154	F	1.4160E-01	1.1955E-01	1.1997E-01	0.744E-01
K-40		8.4683E+00	1.2956E+00	1.3985E+00	0.210E+00
Pa-234	F	1.9719E-01	2.1672E-01	2.1724E-01	0.170E+00
Pb-210	#F	1.6260E+00	2.5355E+00	2.5385E+00	0.115E+01
Pb-212		2.5006E+00	2.0043E-01	2.5766E-01	0.956E-01
PB-214		1.7282E+00	2.6063E-01	2.8251E-01	0.114E+00
RA-226		2.5556E+00	1.4555E+00	1.4649E+00	0.113E+01
Th-230	B	7.1468E+00	1.2926E+01	1.2961E+01	0.104E+02
Th-234	F	1.6009E+00	1.0302E+00	1.0443E+00	0.878E+00
Tl-208	F	7.8710E-01	1.2111E-01	1.3016E-01	0.678E-01
U-235	F	1.3683E-01	1.1864E-01	1.1896E-01	0.787E-01

- All peaks for activity calculation had bad shape.
* - Activity omitted from total
& - Activity omitted from total and all peaks had bad shape.
< - MDA value printed.
A - Activity printed, but activity < MDA.
B - Activity < MDA and failed test.
C - Area < Critical level.
F - Failed fraction or key line test.
H - Halflife limit exceeded

---------- S U M M A R Y ----------

Total Activity (40.6 to 2592.1 keV) 2.325E+01 pCi/g

Laboratory: New World Technology

ORTEC g v - i (3263) Wan32 G53W2.10 22-APR-2009 21:05:42
New World Technology Spectrum name: 2N000353.An1

Sample description
Parcel G 70-PGT-119-74 352g
4/20/09 12:47

Acquisition information
Start time: 22-Apr-2009 20:20:33
Live time: 2700
Real time: 2703

- -

***** S U M M A R Y O F N U C L I D E S I N S A M P L E *****

Nuclide		Activity pCi/g	Time of Count Uncertainty Counting pCi/g	2 Sigma Total pCi/g	MDA pCi/g
Ac-228	F	3.1585E-01	1.4098E-01	1.4233E-01	0.257E+00
AM-241	#B	-2.0769E-02	8.3078E-01	8.3078E-01	0.931E-01
Bi-212	B	2.7759E-01	4.0268E-01	4.0304E-01	0.337E+00
BI-214	F	4.4848E-01	1.4527E-01	1.4780E-01	0.890E-01
CO-60	#B	-2.7272E-02	1.9814E-01	1.9815E-01	0.619E-01
CS-137		6.2576E-02	5.8920E-02	5.9044E-02	0.541E-01
EU-152	B	6.5519E-02	1.1959E-01	1.1968E-01	0.826E-01
EU-154	F	7.9332E-02	8.1644E-02	8.1836E-02	0.650E-01
K-40		1.0772E+01	1.4711E+00	1.6165E+00	0.117E+00
Pa-234	B	8.2430E-02	1.3182E-01	1.3197E-01	0.110E+00
Pb-210	F	1.2023E+00	1.2117E+00	1.2152E+00	0.973E+00
Pb-212	F	3.7232E-01	1.1436E-01	1.1688E-01	0.826E-01
PB-214	F	4.2462E-01	1.8531E-01	1.8724E-01	0.899E-01
RA-226	B	8.1241E-01	1.1604E+00	1.1616E+00	0.953E+00
Th-230	#B	-2.7474E+00	2.4048E+01	2.4051E+01	0.102E+02
Th-234	B	2.5975E-01	8.8070E-01	8.8114E-01	0.870E+00
Tl-208	F	7.8695E-02	1.5538E-01	1.5545E-01	0.663E-01
U-235	B	2.4770E-02	7.6834E-02	7.6851E-02	0.622E-01

- All peaks for activity calculation had bad shape.
* - Activity omitted from total
& - Activity omitted from total and all peaks had bad shape.
< - MDA value printed.
A - Activity printed, but activity < MDA.
B - Activity < MDA and failed test.
C - Area < Critical level.
F - Failed fraction or key line test.
H - Halflife limit exceeded

---------- S U M M A R Y ----------

Total Activity (40.6 to 2592.1 keV) 1.208E+01 pCi/g

Laboratory: New World Technology

ORTEC g v - i (3263) Wan32 G53W2.10 22-APR-2009 15:59:12
New World Technology Spectrum name: 3N000593.An1

Sample description
Parcel G 70-PGT-119-75 371g
4/20/09 13:23

Acquisition information
Start time: 22-Apr-2009 14:48:20
Live time: 2700
Real time: 2703

- -

***** S U M M A R Y O F N U C L I D E S I N S A M P L E *****

Nuclide		Activity pCi/g	Time of Count Uncertainty Counting pCi/g	2 Sigma Total pCi/g	MDA pCi/g
Ac-228	F	4.1070E-01	2.5490E-01	2.5617E-01	0.142E+00
AM-241	B	8.4000E-02	1.0703E-01	1.0726E-01	0.856E-01
Bi-212	#B	-1.1188E-01	4.4752E+00	4.4752E+00	0.237E+00
BI-214	F	3.3561E-01	1.0440E-01	1.0637E-01	0.354E-01
CO-60	#B	-3.7858E-03	3.4330E-02	3.4331E-02	0.169E-01
CS-137		4.4472E-02	3.9275E-02	3.9369E-02	0.263E-01
EU-152	B	-5.0903E-03	5.3938E-02	5.3939E-02	0.712E-01
EU-154	F	9.1394E-02	5.5509E-02	5.5882E-02	0.511E-01
K-40		8.9296E+00	1.2891E+00	1.4036E+00	0.108E+00
Pa-234	#B	2.5114E-02	6.6249E-02	6.6277E-02	0.968E-01
Pb-210		1.5870E+00	1.1501E+00	1.1564E+00	0.716E+00
Pb-212	F	2.6746E-01	9.9384E-02	1.0088E-01	0.740E-01
PB-214	F	5.2708E-01	1.6192E-01	1.6530E-01	0.675E-01
RA-226		1.0758E+00	9.4560E-01	9.4815E-01	0.743E+00
Th-230	B	6.5917E-02	6.4641E+00	6.4641E+00	0.547E+01
Th-234	#F	8.8358E-01	8.7393E-01	8.7903E-01	0.648E+00
Tl-208	F	1.7065E-01	5.6411E-02	5.7351E-02	0.215E-01
U-235	B	2.6193E-02	5.8549E-02	5.8573E-02	0.468E-01

- All peaks for activity calculation had bad shape.
* - Activity omitted from total
& - Activity omitted from total and all peaks had bad shape.
< - MDA value printed.
A - Activity printed, but activity < MDA.
B - Activity < MDA and failed test.
C - Area < Critical level.
F - Failed fraction or key line test.
H - Halflife limit exceeded

---------- S U M M A R Y ----------

Total Activity (39.2 to 2494.9 keV) 1.423E+01 pCi/g

Laboratory: New World Technology

ORTEC g v - i (3263) Wan32 G53W2.10 22-APR-2009 21:08:45
New World Technology Spectrum name: 3N000597.An1

Sample description
Parcel G 70-PGT-119-76 369g
4/20/09 13:34

Acquisition information
Start time: 22-Apr-2009 20:23:36
Live time: 2700
Real time: 2703

- -

***** S U M M A R Y O F N U C L I D E S I N S A M P L E *****

Nuclide		Activity pCi/g	Time of Count Uncertainty Counting pCi/g	2 Sigma Total pCi/g	MDA pCi/g
Ac-228	F	3.8281E-01	1.7971E-01	1.8127E-01	0.129E+00
AM-241	#B	7.2635E-03	8.5124E-02	8.5126E-02	0.671E-01
Bi-212	F	5.9554E-01	3.4805E-01	3.4997E-01	0.222E+00
BI-214	F	4.0646E-01	1.2875E-01	1.3109E-01	0.523E-01
CO-60	#B	6.6529E-03	2.8661E-02	2.8664E-02	0.422E-01
CS-137		8.7688E-02	5.0214E-02	5.0498E-02	0.312E-01
EU-152	#B	7.8125E-02	9.6291E-02	9.6449E-02	0.913E-01
EU-154	B	4.3582E-02	3.5994E-02	3.6124E-02	0.563E-01
K-40		7.0606E+00	1.1494E+00	1.2304E+00	0.109E+00
Pa-234	#B	7.4761E-02	5.9006E-02	5.9281E-02	0.129E+00
Pb-210	#B	7.3112E-01	1.8433E+00	1.8442E+00	0.817E+00
Pb-212	F	2.5828E-01	8.9252E-02	9.0805E-02	0.652E-01
PB-214	F	3.9753E-01	1.3109E-01	1.3347E-01	0.628E-01
RA-226	B	6.5483E-01	9.4652E-01	9.4747E-01	0.767E+00
Th-230	#B	-5.3187E-01	1.2777E+01	1.2777E+01	0.633E+01
Th-234	F	1.3057E+00	9.4640E-01	9.5666E-01	0.612E+00
Tl-208	F	1.8482E-01	7.0360E-02	7.1246E-02	0.298E-01
U-235	B	2.7639E-02	4.8698E-02	4.8730E-02	0.405E-01

- All peaks for activity calculation had bad shape.
* - Activity omitted from total
& - Activity omitted from total and all peaks had bad shape.
< - MDA value printed.
A - Activity printed, but activity < MDA.
B - Activity < MDA and failed test.
C - Area < Critical level.
F - Failed fraction or key line test.
H - Halflife limit exceeded

---------- S U M M A R Y ----------

Total Activity (39.2 to 2494.9 keV) 1.068E+01 pCi/g

Laboratory: New World Technology

ORTEC g v - i (3263) Wan32 G53W2.12 4/22/2009 9:41:14 PM
New World Technology Spectrum name: 6N000476.An1

Sample description
Parcel G 70-PGT-119-77 356g
4/20/09 13:41

Acquisition information
Start time: 4/22/2009 8:56:02 PM
Live time: 2700
Real time: 2706

- -

***** S U M M A R Y O F N U C L I D E S I N S A M P L E *****

Nuclide		Activity pCi/g	Time of Count Uncertainty Counting pCi/g	2 Sigma Total pCi/g	MDA pCi/g
Ac-228	B	-5.3532E-02	1.9336E-01	1.9339E-01	0.190E+00
AM-241	#A	5.5400E-02	1.2081E-01	1.2090E-01	0.825E-01
Bi-212	#B	-1.7362E-02	6.9449E-01	6.9449E-01	0.219E+00
BI-214		2.0771E-01	2.0688E-01	2.0726E-01	0.735E-01
CO-60	#F	4.8165E-02	3.0744E-02	3.0885E-02	0.117E-01
CS-137		6.5351E-02	4.6332E-02	4.6503E-02	0.320E-01
EU-152	B	3.8784E-02	9.4837E-02	9.4877E-02	0.611E-01
EU-154	#B	7.1496E-03	5.3150E-02	5.3153E-02	0.619E-01
K-40		5.8090E+00	9.7616E-01	1.0409E+00	0.154E+00
Pa-234	F	1.9641E-01	1.6044E-01	1.6114E-01	0.940E-01
Pb-210	#B	-8.9294E-01	2.7335E+00	2.7344E+00	0.854E+00
Pb-212	F	1.6384E-01	8.3175E-02	8.3849E-02	0.620E-01
PB-214	F	2.0597E-01	1.1298E-01	1.1372E-01	0.765E-01
RA-226	F	8.8300E-01	9.7720E-01	9.7886E-01	0.781E+00
Th-230	#B	-3.9092E-01	1.0305E+01	1.0306E+01	0.531E+01
Th-234	B	1.6462E-01	6.3541E-01	6.3565E-01	0.784E+00
Tl-208	#F	1.1793E-01	1.5064E-01	1.5138E-01	0.407E-01
U-235	F	6.1750E-02	7.7874E-02	7.7976E-02	0.501E-01

- All peaks for activity calculation had bad shape.
* - Activity omitted from total
& - Activity omitted from total and all peaks had bad shape.
< - MDA value printed.
A - Activity printed, but activity < MDA.
B - Activity < MDA and failed test.
C - Area < Critical level.
F - Failed fraction or key line test.
H - Halflife limit exceeded

---------- S U M M A R Y ----------

Total Activity (43.6 to 2783.8 keV) 6.292E+00 pCi/g

Laboratory: New World Technology

ORTEC g v - i (3263) Wan32 G53W2.10 22-APR-2009 21:55:01
New World Technology Spectrum name: 2N000354.An1

Sample description
Parcel G 70-PGT-119-78 338g
4/20/09 14:00

Acquisition information
Start time: 22-Apr-2009 21:09:52
Live time: 2700
Real time: 2702

- -

***** S U M M A R Y O F N U C L I D E S I N S A M P L E *****

Nuclide		Activity pCi/g	Time of Count Uncertainty Counting pCi/g	2 Sigma Total pCi/g	MDA pCi/g
Ac-228	#B	6.1772E-02	1.4885E-01	1.4889E-01	0.174E+00
AM-241	#B	-5.5819E-03	6.1726E-02	6.1728E-02	0.395E-01
Bi-212	B	2.2295E-01	7.2080E-01	7.2093E-01	0.319E+00
BI-214	F	2.2525E-01	1.7706E-01	1.7759E-01	0.805E-01
CO-60	F	2.2308E-02	2.9113E-02	2.9145E-02	0.173E-01
CS-137	#B	-3.8859E-03	5.5368E-02	5.5369E-02	0.562E-01
EU-152	B	4.0563E-02	3.3543E-01	3.3544E-01	0.103E+00
EU-154	F	7.9566E-02	5.9864E-02	6.0126E-02	0.713E-01
K-40		6.4641E+00	1.1635E+00	1.2310E+00	0.122E+00
Pa-234	B	9.0066E-02	1.0058E-01	1.0082E-01	0.135E+00
Pb-210	B	5.5123E-01	9.7991E-01	9.8081E-01	0.812E+00
Pb-212	F	8.3017E-02	8.5717E-02	8.5885E-02	0.812E-01
PB-214	F	2.1615E-01	1.7214E-01	1.7268E-01	0.926E-01
RA-226	B	6.6817E-02	1.1433E+00	1.1433E+00	0.979E+00
Th-230	#B	2.6232E+00	8.5255E+00	8.5327E+00	0.616E+01
Th-234	F	1.4103E+00	1.1125E+00	1.1227E+00	0.768E+00
Tl-208	B	-1.2515E-02	3.5652E-02	3.5660E-02	0.545E-01
U-235	F	8.1977E-02	6.3416E-02	6.3637E-02	0.473E-01

- All peaks for activity calculation had bad shape.
* - Activity omitted from total
& - Activity omitted from total and all peaks had bad shape.
< - MDA value printed.
A - Activity printed, but activity < MDA.
B - Activity < MDA and failed test.
C - Area < Critical level.
F - Failed fraction or key line test.
H - Halflife limit exceeded

---------- S U M M A R Y ----------

Total Activity (40.6 to 2592.1 keV) 8.172E+00 pCi/g

Laboratory: New World Technology

ORTEC g v - i (3263) Npp32 G53W3.10 30-APR-2009 12:02:23
New World Technology Spectrum name: 3N000647.An1

Sample description
Parcel G 70-PGT-119-79 308g
4/29/09 09:50

Acquisition information
Start time: 30-Apr-2009 11:16:19
Live time: 2700
Real time: 2704

- -

***** S U M M A R Y O F N U C L I D E S I N S A M P L E *****

Nuclide		Time of Count Activity pCi/g	Uncertainty Counting pCi/g	2 Sigma Total pCi/g	MDA pCi/g
Ac-228	F	4.1621E-01	1.5029E-01	1.5248E-01	0.341E-01
AM-241	#B	6.8891E-02	1.5159E-01	1.5170E-01	0.963E-01
Bi-212	B	2.2844E-01	3.0571E-01	3.0604E-01	0.246E+00
BI-214	F	2.9714E-01	1.0643E-01	1.0795E-01	0.426E-01
CO-60	#B	-5.5852E-03	3.2591E-02	3.2593E-02	0.173E-01
CS-137		5.6699E-02	4.5476E-02	4.5608E-02	0.293E-01
EU-152	#B	-4.5405E-02	2.4661E-01	2.4664E-01	0.785E-01
EU-154	F	6.9428E-02	4.6285E-02	4.6543E-02	0.683E-01
K-40		3.2794E+00	1.1943E+00	1.2116E+00	0.685E+00
Pa-234	#F	8.2079E-02	1.1103E-01	1.1121E-01	0.607E-01
Pb-210	B	7.5978E-01	1.1512E+00	1.1526E+00	0.804E+00
Pb-212	F	1.8788E-01	8.9343E-02	9.0167E-02	0.728E-01
PB-214	F	2.7392E-01	1.3137E-01	1.3250E-01	0.573E-01
RA-226	B	7.4098E-01	9.8696E-01	9.8812E-01	0.804E+00
Th-230	#B	-1.1980E+01	5.9737E+01	5.9759E+01	0.724E+01
Th-234	#B	1.5007E-01	9.9892E-01	9.9905E-01	0.720E+00
Tl-208	F	1.5865E-01	7.1018E-02	7.1665E-02	0.278E-01
U-235	B	4.7317E-02	6.1303E-02	6.1380E-02	0.476E-01

- All peaks for activity calculation had bad shape.
* - Activity omitted from total
& - Activity omitted from total and all peaks had bad shape.
< - MDA value printed.
A - Activity printed, but activity < MDA.
B - Activity < MDA and failed test.
C - Area < Critical level.
F - Failed fraction or key line test.
H - Halflife limit exceeded

---------- S U M M A R Y ----------

Total Activity (39.2 to 2494.9 keV) 4.670E+00 pCi/g

Laboratory: New World Technology

ORTEC g v - i (3263) Npp32 G53W3.10 30-APR-2009 15:18:15
New World Technology Spectrum name: 1N000626.An1

Sample description
Parcel G 70-PGT-119-80 309g
4/29/09 10:00

Acquisition information
Start time: 30-Apr-2009 13:36:39
Live time: 5400
Real time: 5402

- -

***** S U M M A R Y O F N U C L I D E S I N S A M P L E *****

Nuclide		Activity pCi/g	Time of Count Uncertainty Counting pCi/g	2 Sigma Total pCi/g	MDA pCi/g
Ac-228	F	1.3651E-01	9.6200E-02	9.6572E-02	0.110E+00
AM-241	#A	1.4351E-02	5.0789E-02	5.0802E-02	0.361E-01
Bi-212	#F	2.5257E-01	1.7928E-01	1.7995E-01	0.208E+00
BI-214	#F	1.8939E-01	8.4563E-02	8.5344E-02	0.381E-01
CO-60	#F	7.9904E-03	9.2375E-03	9.2504E-03	0.538E-02
CS-137	B	1.1130E-02	2.5190E-02	2.5199E-02	0.195E-01
EU-152	#A	9.6120E-03	1.1854E-02	1.1873E-02	0.326E-01
EU-154	A	1.6716E-02	1.9682E-02	1.9717E-02	0.286E-01
K-40	#F	1.2776E+00	3.9410E-01	4.0203E-01	0.106E+00
Pa-234	#F	9.7223E-02	7.6771E-02	7.7125E-02	0.433E-01
Pb-210	#F	5.1054E-01	6.4843E-01	6.4961E-01	0.474E+00
Pb-212	F	1.1029E-01	5.1486E-02	5.1979E-02	0.389E-01
Pb-214	F	1.2828E-01	6.5202E-02	6.5702E-02	0.333E-01
RA-226		1.1020E+00	5.9623E-01	6.0046E-01	0.449E+00
Th-230	#B	-6.3920E+00	1.9032E+01	1.9051E+01	0.397E+01
Th-234	#B	1.0491E-01	5.9678E-01	5.9688E-01	0.484E+00
Tl-208	#F	7.7473E-02	3.1308E-02	3.1659E-02	0.128E-01
U-235	B	-2.0233E-01	7.9612E-01	7.9623E-01	0.129E+00

- All peaks for activity calculation had bad shape.
* - Activity omitted from total
& - Activity omitted from total and all peaks had bad shape.
< - MDA value printed.
A - Activity printed, but activity < MDA.
B - Activity < MDA and failed test.
C - Area < Critical level.
F - Failed fraction or key line test.
H - Halflife limit exceeded

---------- S U M M A R Y ----------

Total Activity (39.3 to 2489.2 keV) 2.982E+00 pCi/g

Laboratory: New World Technology

ORTEC g v - i (3263) Npp32 G53W3.10 11-MAY-2009 11:14:45
New World Technology Spectrum name: 3N000717.An1

Sample description
Parcel G 70-PGT-119-81 310g
5/07/09 12:45

Acquisition information
Start time: 11-May-2009 10:24:28
Live time: 2700
Real time: 2702

- -

***** S U M M A R Y O F N U C L I D E S I N S A M P L E *****

Nuclide		Time of Count Activity pCi/g	Uncertainty 2 Sigma Counting pCi/g	Total pCi/g	MDA pCi/g
Ac-228	F	3.3829E-01	1.4237E-01	1.4390E-01	0.339E-01
AM-241	#B	-1.9453E-02	1.9667E-01	1.9668E-01	0.572E-01
Bi-212	B	1.7231E-01	3.5820E-01	3.5836E-01	0.290E+00
BI-214	F	3.0317E-01	1.2224E-01	1.2361E-01	0.496E-01
CO-60	#F	4.0278E-02	3.2204E-02	3.2298E-02	0.172E-01
CS-137		7.4396E-02	4.4737E-02	4.4967E-02	0.251E-01
EU-152	F	2.0671E-01	1.0027E-01	1.0132E-01	0.870E-01
EU-154	B	5.8943E-02	8.0912E-02	8.1018E-02	0.712E-01
K-40	#	4.5655E+00	1.0084E+00	1.0476E+00	0.130E+00
Pa-234	F	1.7849E-01	8.6269E-02	8.7335E-02	0.107E+00
Pb-210	#B	-9.1362E-04	1.0783E+00	1.0783E+00	0.917E+00
Pb-212	F	1.2416E-01	7.0871E-02	7.1325E-02	0.597E-01
PB-214	F	2.1475E-01	1.3549E-01	1.3617E-01	0.671E-01
RA-226	#B	-2.3593E-01	2.3929E+00	2.3929E+00	0.896E+00
Th-230	#B	-1.4101E+01	2.4604E+02	2.4604E+02	0.892E+01
Th-234	F	8.3159E-01	6.1873E-01	6.2510E-01	0.629E+00
Tl-208	#F	7.1960E-02	4.5974E-02	4.6180E-02	0.226E-01
U-235	F	5.6756E-02	5.5791E-02	5.5912E-02	0.402E-01

- All peaks for activity calculation had bad shape.
* - Activity omitted from total
& - Activity omitted from total and all peaks had bad shape.
< - MDA value printed.
A - Activity printed, but activity < MDA.
B - Activity < MDA and failed test.
C - Area < Critical level.
F - Failed fraction or key line test.
H - Halflife limit exceeded

---------- S U M M A R Y ----------

Total Activity (39.2 to 2494.9 keV) 5.968E+00 pCi/g

Laboratory: New World Technology

ORTEC g v - i (3263) Npp32 G53W3.12 5/11/2009 4:01:56 PM
New World Technology Spectrum name: 6N000549.An1

Sample description
Parcel G 70-PGT-119-82 332g
5/07/09 10:50

Acquisition information
Start time: 5/11/2009 11:20:49 AM
Live time: 5400
Real time: 5409

- -

***** S U M M A R Y O F N U C L I D E S I N S A M P L E *****

Nuclide		Time of Count Activity pCi/g	Uncertainty 2 Sigma Counting pCi/g	Total pCi/g	MDA pCi/g
Ac-228	F	1.4391E-01	8.6311E-02	8.6770E-02	0.121E+00
AM-241	A	1.6720E-02	8.6961E-02	8.6972E-02	0.713E-01
Bi-212	#F	6.1204E-01	3.8241E-01	3.8425E-01	0.179E+00
BI-214		4.4024E-01	1.1802E-01	1.2101E-01	0.525E-01
CO-60	B	8.2715E-04	2.8833E-03	2.8837E-03	0.551E-02
CS-137	#B	-1.9012E-02	6.2521E-02	6.2532E-02	0.324E-01
EU-152	B	5.3649E-02	8.1056E-02	8.1144E-02	0.654E-01
EU-154	#B	3.4952E-02	3.7501E-02	3.7582E-02	0.400E-01
K-40		1.1371E+01	1.0444E+00	1.2612E+00	0.170E+00
Pa-234	#F	9.6643E-02	9.4876E-02	9.5161E-02	0.857E-01
Pb-210	#B	-1.1879E+00	2.6084E+00	2.6099E+00	0.639E+00
Pb-212	F	2.8697E-01	6.9969E-02	7.2395E-02	0.517E-01
PB-214	F	3.0914E-01	7.3875E-02	7.6406E-02	0.483E-01
RA-226		9.6143E-01	7.5670E-01	7.5924E-01	0.603E+00
Th-230	#B	-1.8122E+00	1.1901E+01	1.1901E+01	0.105E+01
Th-234	B	2.9542E-01	8.0409E-01	8.0471E-01	0.593E+00
Tl-208	F	1.5530E-01	6.4351E-02	6.7312E-02	0.335E-01
U-235	F	7.4907E-02	4.5589E-02	4.5846E-02	0.337E-01

- All peaks for activity calculation had bad shape.
* - Activity omitted from total
& - Activity omitted from total and all peaks had bad shape.
< - MDA value printed.
A - Activity printed, but activity < MDA.
B - Activity < MDA and failed test.
C - Area < Critical level.
F - Failed fraction or key line test.
H - Halflife limit exceeded

---------- S U M M A R Y ----------

Total Activity (41.6 to 2659.6 keV) 1.421E+01 pCi/g

Laboratory: New World Technology

ORTEC g v - i (3263) Npp32 G53W3.12 5/11/2009 12:25:41 PM
New World Technology Spectrum name: 7N000308.An1

Sample description
Parcel G 70-PGT-119-83 352g
5/07/09 12:58

Acquisition information
Start time: 5/11/2009 11:23:02 AM
Live time: 3600
Real time: 3605

- -

***** S U M M A R Y O F N U C L I D E S I N S A M P L E *****

Nuclide		Time of Count Activity pCi/g	Uncertainty Counting pCi/g	2 Sigma Total pCi/g	MDA pCi/g
Ac-228	F	4.6002E-01	1.7262E-01	1.7495E-01	0.160E+00
AM-241	#A	-2.1443E-01	1.9892E+00	1.9893E+00	0.803E+00
Bi-212	#B	-3.1051E-01	6.8352E-01	6.8352E-01	0.190E+00
BI-214		3.0450E-01	1.1011E-01	1.1166E-01	0.653E-01
CO-60	#B	-6.6980E-03	7.5187E-02	7.5188E-02	0.227E-01
CS-137	#B	-3.2438E-02	1.2974E-01	1.2976E-01	0.423E-01
EU-152	B	8.1894E-02	8.4971E-02	8.5167E-02	0.126E+00
EU-154	#B	-2.5498E-02	2.6877E-02	2.6937E-02	0.100E+00
K-40		1.5537E+01	1.5561E+00	1.8317E+00	0.369E+00
Pa-234	#B	9.2709E-02	6.3694E-02	6.4085E-02	0.156E+00
Pb-210	#F	0.0000E+00	1.2389E+01	1.2389E+01	0.000E+00
Pb-212	F	3.0182E-01	1.1028E-01	1.1200E-01	0.861E-01
PB-214	F	4.8879E-01	1.5947E-01	1.6242E-01	0.792E-01
RA-226	B	3.0838E-01	1.3318E+00	1.3319E+00	0.112E+01
Th-230	#B	-6.8307E+00	4.4894E+01	4.4903E+01	0.253E+02
Th-234	#B	-9.9834E+00	1.5379E+02	1.5379E+02	0.396E+01
Tl-208	#F	1.2980E-01	7.3010E-02	7.4853E-02	0.543E-01
U-235	F	7.2323E-02	7.6553E-02	7.6695E-02	0.600E-01

- All peaks for activity calculation had bad shape.
* - Activity omitted from total
& - Activity omitted from total and all peaks had bad shape.
< - MDA value printed.
A - Activity printed, but activity < MDA.
B - Activity < MDA and failed test.
C - Area < Critical level.
F - Failed fraction or key line test.
H - Halflife limit exceeded

---------- S U M M A R Y ----------

Total Activity (42.1 to 2684.5 keV) 1.722E+01 pCi/g

Laboratory: New World Technology

ORTEC g v - i (3263) Npp32 G53W3.10 11-MAY-2009 12:06:54
New World Technology Spectrum name: 2N000472.An1

Sample description
Parcel G 70-PGT-119-84 358g
5/07/09 13:10

Acquisition information
Start time: 11-May-2009 11:18:07
Live time: 2700
Real time: 2703

- -

***** S U M M A R Y O F N U C L I D E S I N S A M P L E *****

Nuclide		Time of Count Activity pCi/g	Uncertainty 2 Sigma Counting pCi/g	Total pCi/g	MDA pCi/g
Ac-228	F	4.2476E-01	1.8097E-01	1.8287E-01	0.208E+00
AM-241	#B	-1.8445E-02	6.7468E-01	6.7469E-01	0.396E-01
Bi-212	B	3.9717E-02	3.5079E-02	3.5164E-02	0.352E+00
BI-214	F	5.6630E-01	1.5059E-01	1.5446E-01	0.617E-01
CO-60	F	1.1719E-01	4.6447E-02	4.6997E-02	0.106E-01
CS-137	B	3.3991E-02	5.7222E-02	5.7259E-02	0.551E-01
EU-152	B	1.0915E-02	7.2400E-02	7.2404E-02	0.106E+00
EU-154	B	7.2348E-02	6.2400E-02	6.2608E-02	0.736E-01
K-40		1.4392E+01	1.6860E+00	1.9088E+00	0.115E+00
Pa-234	F	2.8567E-01	1.5494E-01	1.5646E-01	0.929E-01
Pb-210		1.1805E+00	9.4945E-01	9.5370E-01	0.751E+00
Pb-212	F	4.0556E-01	1.0883E-01	1.1195E-01	0.782E-01
PB-214	F	5.1564E-01	1.4250E-01	1.4617E-01	0.861E-01
RA-226	F	1.0719E+00	1.2142E+00	1.2162E+00	0.971E+00
Th-230	#B	-2.3418E+00	1.6528E+01	1.6531E+01	0.882E+01
Th-234	F	7.6868E-01	5.6981E-01	5.7571E-01	0.692E+00
Tl-208	F	1.1450E-01	7.3345E-02	7.3673E-02	0.534E-01
U-235	F	9.8680E-02	1.0887E-01	1.0906E-01	0.618E-01

- All peaks for activity calculation had bad shape.
* - Activity omitted from total
& - Activity omitted from total and all peaks had bad shape.
< - MDA value printed.
A - Activity printed, but activity < MDA.
B - Activity < MDA and failed test.
C - Area < Critical level.
F - Failed fraction or key line test.
H - Halflife limit exceeded

---------- S U M M A R Y ----------

Total Activity (40.6 to 2592.1 keV) 1.729E+01 pCi/g

Laboratory: New World Technology

ORTEC g v - i (3263) Npp32 G53W3.10 11-MAY-2009 14:09:01
New World Technology Spectrum name: 2N000474.An1

Sample description
Parcel G 70-PGT-119-84DUP 358g
5/07/09 13:10

Acquisition information
Start time: 11-May-2009 13:15:55
Live time: 2700
Real time: 2702

- -

***** S U M M A R Y O F N U C L I D E S I N S A M P L E *****

Nuclide		Time of Count Activity pCi/g	Uncertainty Counting pCi/g	2 Sigma Total pCi/g	MDA pCi/g
Ac-228	F	4.3322E-01	1.9597E-01	1.9780E-01	0.168E+00
AM-241	#B	8.0368E-02	1.1741E-01	1.1760E-01	0.829E-01
Bi-212	F	3.8209E-01	5.2882E-01	5.2934E-01	0.343E+00
BI-214	F	5.8300E-01	1.7201E-01	1.7561E-01	0.723E-01
CO-60	#F	2.3364E-02	3.0728E-02	3.0762E-02	0.180E-01
CS-137	B	1.7584E-02	5.7496E-02	5.7506E-02	0.567E-01
EU-152	#B	3.2481E-02	3.7506E-02	3.7576E-02	0.106E+00
EU-154	B	4.5208E-02	7.4843E-02	7.4911E-02	0.573E-01
K-40		1.4826E+01	1.7722E+00	1.9977E+00	0.243E+00
Pa-234	#F	1.0365E-01	1.5668E-01	1.5688E-01	0.104E+00
Pb-210	#F	1.1541E+00	1.3997E+00	1.4025E+00	0.916E+00
Pb-212	F	4.0754E-01	1.1870E-01	1.2159E-01	0.851E-01
PB-214	F	6.4990E-01	2.2605E-01	2.2973E-01	0.104E+00
RA-226	B	8.5886E-01	1.2224E+00	1.2236E+00	0.988E+00
Th-230	#B	-4.0401E+00	1.7698E+01	1.7706E+01	0.869E+01
Th-234		1.3534E+00	7.3729E-01	7.5138E-01	0.647E+00
Tl-208	F	1.4564E-01	9.6845E-02	9.7247E-02	0.569E-01
U-235	F	1.3101E-01	1.0152E-01	1.0187E-01	0.525E-01

- All peaks for activity calculation had bad shape.
* - Activity omitted from total
& - Activity omitted from total and all peaks had bad shape.
< - MDA value printed.
A - Activity printed, but activity < MDA.
B - Activity < MDA and failed test.
C - Area < Critical level.
F - Failed fraction or key line test.
H - Halflife limit exceeded

---------- S U M M A R Y ----------

Total Activity (40.6 to 2592.1 keV) 1.891E+01 pCi/g

Laboratory: New World Technology

ORTEC g v - i (3263) Npp32 G53W3.10 11-MAY-2009 12:50:27
New World Technology Spectrum name: 4N000407.An1

Sample description
Parcel G 70-PGT-119-85 345g
5/07/09 11:00

Acquisition information
Start time: 11-May-2009 11:49:06
Live time: 2700
Real time: 2704

- -

***** S U M M A R Y O F N U C L I D E S I N S A M P L E *****

Nuclide		Time of Count Activity pCi/g	Uncertainty Counting pCi/g	2 Sigma Total pCi/g	MDA pCi/g
Ac-228	F	6.0264E-01	2.0770E-01	2.1103E-01	0.121E+00
AM-241	#B	4.5035E-01	7.3957E-01	7.4051E-01	0.463E+00
Bi-212	#B	-4.1877E-01	1.6751E+01	1.6751E+01	0.360E+00
BI-214	F	7.1215E-01	2.1493E-01	2.1924E-01	0.875E-01
CO-60	#F	3.7282E-02	3.8890E-02	3.8956E-02	0.201E-01
CS-137	B	1.9133E-02	4.0450E-02	4.0467E-02	0.315E-01
EU-152	F	1.7675E-01	1.1408E-01	1.1476E-01	0.139E+00
EU-154	F	1.8500E-01	1.0843E-01	1.0921E-01	0.958E-01
K-40		1.8028E+01	1.7605E+00	2.0871E+00	0.100E+00
Pa-234	B	4.0989E-02	6.0026E-02	6.0107E-02	0.216E+00
Pb-210	#F	0.0000E+00	5.6049E+00	5.6049E+00	0.000E+00
Pb-212	F	3.3990E-01	1.1197E-01	1.1411E-01	0.813E-01
Pb-214	F	5.9383E-01	1.7214E-01	1.7617E-01	0.745E-01
RA-226	B	4.7999E-01	1.2671E+00	1.2675E+00	0.105E+01
Th-230	#B	1.2237E+01	2.9967E+01	3.0011E+01	0.212E+02
Th-234	#B	-9.1785E+00	9.8490E+01	9.8495E+01	0.217E+01
Tl-208	#F	2.2917E-01	8.1832E-02	8.3001E-02	0.462E-01
U-235	B	5.8704E-02	7.7968E-02	7.8061E-02	0.618E-01

- All peaks for activity calculation had bad shape.
* - Activity omitted from total
& - Activity omitted from total and all peaks had bad shape.
< - MDA value printed.
A - Activity printed, but activity < MDA.
B - Activity < MDA and failed test.
C - Area < Critical level.
F - Failed fraction or key line test.
H - Halflife limit exceeded

---------- S U M M A R Y ----------

Total Activity (40.4 to 2576.4 keV) 2.069E+01 pCi/g

Laboratory: New World Technology

ORTEC g v - i (3263) Npp32 G53W3.10 11-MAY-2009 14:32:21
New World Technology Spectrum name: 5N000429.An1

Sample description
Parcel G 70-PGT-119-86 359g
5/07/09 13:14

Acquisition information
Start time: 11-May-2009 12:48:57
Live time: 5400
Real time: 5403

- -

***** S U M M A R Y O F N U C L I D E S I N S A M P L E *****

Nuclide		Time of Count Activity pCi/g	Uncertainty Counting pCi/g	2 Sigma Total pCi/g	MDA pCi/g
Ac-228	F	8.4803E-01	1.7849E-01	1.8606E-01	0.786E-01
AM-241	B	1.3404E-03	6.9279E-02	6.9279E-02	0.583E-01
Bi-212	F	5.6698E-01	2.9077E-01	2.9285E-01	0.225E+00
BI-214	F	8.2140E-01	1.2183E-01	1.3164E-01	0.448E-01
CO-60	#B	4.7235E-03	1.1781E-02	1.1784E-02	0.234E-01
CS-137		5.2751E-02	3.4332E-02	3.4483E-02	0.241E-01
EU-152	F	1.0308E-01	4.0430E-02	4.1080E-02	0.738E-01
EU-154	F	5.0480E-02	4.0230E-02	4.0387E-02	0.474E-01
K-40		1.3153E+01	1.1544E+00	1.4148E+00	0.302E+00
Pa-234	B	1.7453E-02	1.6842E-02	1.6894E-02	0.776E-01
Pb-210	B	1.0285E-02	8.8387E-01	8.8387E-01	0.660E+00
Pb-212		8.2362E-01	9.7572E-02	1.1120E-01	0.590E-01
Pb-214	F	6.5365E-01	1.3227E-01	1.3855E-01	0.651E-01
RA-226	B	3.5320E-01	1.0297E+00	1.0299E+00	0.851E+00
Th-230	B	9.9507E-02	7.6857E+00	7.6857E+00	0.633E+01
Th-234	#B	-1.5346E-01	8.5835E-01	8.5851E-01	0.637E+00
Tl-208	F	2.8836E-01	6.6234E-02	6.8499E-02	0.314E-01
U-235	F	1.5078E-01	5.6696E-02	5.7527E-02	0.423E-01

- All peaks for activity calculation had bad shape.
* - Activity omitted from total
& - Activity omitted from total and all peaks had bad shape.
< - MDA value printed.
A - Activity printed, but activity < MDA.
B - Activity < MDA and failed test.
C - Area < Critical level.
F - Failed fraction or key line test.
H - Halflife limit exceeded

---------- S U M M A R Y ----------

Total Activity (38.2 to 2445.5 keV) 1.736E+01 pCi/g

Laboratory: New World Technology

ORTEC g v - i (3263) Npp32 G53W3.10 11-MAY-2009 11:11:06
New World Technology Spectrum name: 2N000471.An1

Sample description
Parcel G 70-PGT-119-87 328g
5/07/09 13:24

Acquisition information
Start time: 11-May-2009 10:21:19
Live time: 2700
Real time: 2703

- -

***** S U M M A R Y O F N U C L I D E S I N S A M P L E *****

Nuclide		Time of Count Activity pCi/g	Uncertainty 2 Sigma Counting pCi/g	Total pCi/g	MDA pCi/g
Ac-228	F	9.3619E-01	2.9086E-01	2.9658E-01	0.153E+00
AM-241	#B	8.8438E-02	1.7501E-01	1.7516E-01	0.111E+00
Bi-212	#B	-8.2439E-02	8.2439E-02	8.2594E-02	0.370E+00
BI-214	F	6.3040E-01	1.6653E-01	1.7087E-01	0.571E-01
CO-60	#B	8.5999E-03	1.4060E-02	1.4070E-02	0.116E-01
CS-137	#B	-1.3679E-02	8.3573E-02	8.3577E-02	0.678E-01
EU-152	B	7.2361E-02	1.0594E-01	1.0606E-01	0.107E+00
EU-154	F	1.4317E-01	8.6335E-02	8.6923E-02	0.614E-01
K-40		9.6236E+00	1.4408E+00	1.5601E+00	0.125E+00
Pa-234	#B	8.2520E-02	7.5018E-02	7.5281E-02	0.852E-01
Pb-210		1.7046E+00	1.3223E+00	1.3286E+00	0.864E+00
Pb-212	F	3.8271E-01	1.2219E-01	1.2468E-01	0.890E-01
PB-214	F	5.8725E-01	1.8053E-01	1.8429E-01	0.809E-01
RA-226	B	5.5432E-01	1.3598E+00	1.3603E+00	0.112E+01
Th-230	B	1.0741E-01	9.0897E+00	9.0897E+00	0.748E+01
Th-234	F	1.5149E+00	1.0284E+00	1.0411E+00	0.781E+00
Tl-208	F	1.0925E-01	7.3253E-02	7.3552E-02	0.615E-01
U-235	F	1.6726E-01	6.6806E-02	6.7675E-02	0.436E-01

- All peaks for activity calculation had bad shape.
* - Activity omitted from total
& - Activity omitted from total and all peaks had bad shape.
< - MDA value printed.
A - Activity printed, but activity < MDA.
B - Activity < MDA and failed test.
C - Area < Critical level.
F - Failed fraction or key line test.
H - Halflife limit exceeded

---------- S U M M A R Y ----------

Total Activity (40.6 to 2592.1 keV) 1.555E+01 pCi/g

Laboratory: New World Technology

ORTEC g v - i (3263) Npp32 G53W3.10 12-MAY-2009 13:45:17
New World Technology Spectrum name: 1N000698.An1

Sample description
Parcel G 70-PGT-119-88 325g
5/07/09 13:32

Acquisition information
Start time: 11-May-2009 12:44:14
Live time: 5400
Real time: 5403

- -

***** S U M M A R Y O F N U C L I D E S I N S A M P L E *****

Nuclide		Time of Count Activity pCi/g	Uncertainty Counting pCi/g	2 Sigma Total pCi/g	MDA pCi/g
Ac-228	F	4.6014E-01	1.6789E-01	1.7030E-01	0.117E+00
AM-241	A	2.9997E-02	6.9420E-02	6.9465E-02	0.566E-01
Bi-212	B	1.1332E-01	1.6218E-01	1.6233E-01	0.239E+00
BI-214	F	3.8831E-01	9.7815E-02	1.0063E-01	0.580E-01
CO-60	#B	1.6489E-03	9.5164E-03	9.5170E-03	0.910E-02
CS-137	B	5.0978E-03	2.9423E-02	2.9425E-02	0.238E-01
EU-152	C	8.2189E-02	6.2074E-02	6.2341E-02	0.427E-01
EU-154	#A	2.7697E-02	3.3600E-02	3.3656E-02	0.306E-01
K-40		1.3250E+01	1.4144E+00	1.6369E+00	0.383E+00
Pa-234	F	8.5840E-02	6.9010E-02	6.9317E-02	0.616E-01
Pb-210		1.1624E+00	8.5744E-01	8.6204E-01	0.572E+00
Pb-212	F	4.9067E-01	7.6232E-02	8.2589E-02	0.493E-01
Pb-214		3.0682E-01	7.5885E-02	7.8314E-02	0.652E-01
RA-226		1.7818E+00	7.3445E-01	7.4339E-01	0.552E+00
Th-230	#B	-5.8942E+00	2.5598E+01	2.5610E+01	0.518E+01
Th-234	F	8.9026E-01	8.0790E-01	8.1348E-01	0.557E+00
Tl-208	F	1.8524E-01	4.4419E-02	4.5820E-02	0.247E-01
U-235	B	6.4167E-02	3.3138E-02	3.3422E-02	0.141E+00

- All peaks for activity calculation had bad shape.
* - Activity omitted from total
& - Activity omitted from total and all peaks had bad shape.
< - MDA value printed.
A - Activity printed, but activity < MDA.
B - Activity < MDA and failed test.
C - Area < Critical level.
F - Failed fraction or key line test.
H - Halflife limit exceeded

---------- S U M M A R Y ----------

Total Activity (39.3 to 2490.8 keV) 1.900E+01 pCi/g

Laboratory: New World Technology

ORTEC g v - i (3263) Npp32 G53W3.10 11-MAY-2009 13:10:54
New World Technology Spectrum name: 2N000473.An1

Sample description
Parcel G 70-PGT-119-89 344g
5/07/09 13:35

Acquisition information
Start time: 11-May-2009 12:12:08
Live time: 2700
Real time: 2703

- -

***** S U M M A R Y O F N U C L I D E S I N S A M P L E *****

Nuclide		Time of Count Activity pCi/g	Uncertainty Counting pCi/g	2 Sigma Total pCi/g	MDA pCi/g
Ac-228	#F	3.3841E-01	1.8154E-01	1.8275E-01	0.126E+00
AM-241	#B	2.5023E-02	5.6137E-02	5.6175E-02	0.490E-01
Bi-212	#B	-3.3102E-01	3.3194E-01	3.3194E-01	0.226E+00
BI-214	F	3.6415E-01	1.5039E-01	1.5201E-01	0.640E-01
CO-60	#F	4.1379E-02	2.8439E-02	2.8551E-02	0.110E-01
CS-137	#B	-4.0031E-02	1.1395E-01	1.1398E-01	0.627E-01
EU-152	#F	1.7330E-01	9.0321E-02	9.1146E-02	0.984E-01
EU-154	F	9.7588E-02	5.4132E-02	5.4568E-02	0.658E-01
K-40		6.5577E+00	1.1617E+00	1.2312E+00	0.120E+00
Pa-234	#B	5.8711E-02	9.9733E-02	9.9834E-02	0.750E-01
Pb-210	B	7.1987E-01	1.1497E+00	1.1510E+00	0.816E+00
Pb-212	F	9.3326E-02	8.2814E-02	8.3034E-02	0.765E-01
PB-214	F	3.3293E-01	1.3084E-01	1.3252E-01	0.760E-01
RA-226	B	2.7726E-01	1.1466E+00	1.1467E+00	0.955E+00
Th-230	#B	-1.4225E+01	9.1828E+02	9.1828E+02	0.523E+01
Th-234	#F	1.2991E+00	8.4580E-01	8.5715E-01	0.660E+00
Tl-208	F	2.0311E-01	9.0648E-02	9.1479E-02	0.537E-01
U-235	F	6.7476E-02	1.2906E-01	1.2914E-01	0.579E-01

- All peaks for activity calculation had bad shape.
* - Activity omitted from total
& - Activity omitted from total and all peaks had bad shape.
< - MDA value printed.
A - Activity printed, but activity < MDA.
B - Activity < MDA and failed test.
C - Area < Critical level.
F - Failed fraction or key line test.
H - Halflife limit exceeded

---------- S U M M A R Y ----------

Total Activity (40.6 to 2592.1 keV) 7.728E+00 pCi/g

Laboratory: New World Technology

ORTEC g v - i (3263) Npp32 G53W3.10 11-MAY-2009 13:10:16
New World Technology Spectrum name: 3N000719.An1

Sample description
Parcel G 70-PGT-119-90 349g
5/07/09 13:38

Acquisition information
Start time: 11-May-2009 12:12:10
Live time: 2700
Real time: 2703

- -

***** S U M M A R Y O F N U C L I D E S I N S A M P L E *****

Nuclide		Time of Count Activity pCi/g	Uncertainty Counting pCi/g	2 Sigma Total pCi/g	MDA pCi/g
Ac-228	F	6.2004E-01	1.7404E-01	1.7822E-01	0.898E-01
AM-241	#B	-2.7199E-02	5.5952E-01	5.5952E-01	0.486E-01
Bi-212	#F	3.2791E-01	3.4178E-01	3.4238E-01	0.212E+00
BI-214	F	5.4977E-01	1.6882E-01	1.7209E-01	0.668E-01
CO-60	#F	5.9002E-02	2.5016E-02	2.5275E-02	0.152E-01
CS-137	#B	-3.3182E-03	2.3664E-01	2.3664E-01	0.320E-01
EU-152	B	2.6107E-02	4.0722E-02	4.0764E-02	0.765E-01
EU-154	#B	2.1601E-02	3.0549E-02	3.0587E-02	0.592E-01
K-40		8.6188E+00	1.3838E+00	1.4840E+00	0.377E+00
Pa-234	F	1.7060E-01	8.1607E-02	8.2636E-02	0.949E-01
Pb-210	F	9.1953E-01	1.0751E+00	1.0774E+00	0.740E+00
Pb-212	F	4.7257E-01	1.0697E-01	1.1126E-01	0.701E-01
PB-214	F	4.5942E-01	1.5565E-01	1.5833E-01	0.802E-01
RA-226	B	6.5715E-01	1.0865E+00	1.0873E+00	0.889E+00
Th-230	#B	-1.3497E+01	7.1745E+00	7.1745E+00	0.428E+01
Th-234	F	8.1047E-01	7.8284E-01	7.8763E-01	0.628E+00
Tl-208	#F	2.5507E-01	8.0521E-02	8.1991E-02	0.294E-01
U-235	F	9.9022E-02	9.2513E-02	9.2734E-02	0.522E-01

- All peaks for activity calculation had bad shape.
* - Activity omitted from total
& - Activity omitted from total and all peaks had bad shape.
< - MDA value printed.
A - Activity printed, but activity < MDA.
B - Activity < MDA and failed test.
C - Area < Critical level.
F - Failed fraction or key line test.
H - Halflife limit exceeded

---------- S U M M A R Y ----------

Total Activity (39.2 to 2494.9 keV) 1.136E+01 pCi/g

Laboratory: New World Technology

ORTEC g v - i (3263) Npp32 G53W3.10 11-MAY-2009 13:47:49
New World Technology Spectrum name: 4N000408.An1

Sample description
Parcel G 70-PGT-119-91 345g
5/07/09 13:48

Acquisition information
Start time: 11-May-2009 12:49:45
Live time: 2700
Real time: 2703

- -

***** S U M M A R Y O F N U C L I D E S I N S A M P L E *****

Nuclide		Time of Count Activity pCi/g	Uncertainty Counting pCi/g	2 Sigma Total pCi/g	MDA pCi/g
Ac-228	F	7.3500E-01	2.4091E-01	2.4518E-01	0.875E-01
AM-241	#B	1.6869E-01	5.6205E-01	5.6222E-01	0.393E+00
Bi-212	#B	-1.3779E-01	7.7176E-01	7.7180E-01	0.372E+00
BI-214	F	5.2444E-01	1.4048E-01	1.4404E-01	0.545E-01
CO-60	#B	2.9170E-03	7.9918E-03	7.9938E-03	0.931E-02
CS-137	#B	-3.3166E-03	2.3155E-01	2.3155E-01	0.313E-01
EU-152	B	1.0210E-01	8.8795E-02	8.9087E-02	0.144E+00
EU-154	B	6.1302E-02	7.9874E-02	7.9991E-02	0.107E+00
K-40		1.8071E+01	1.7626E+00	2.0903E+00	0.100E+00
Pa-234	B	1.3367E-01	9.8674E-02	9.9198E-02	0.150E+00
Pb-210	#F	0.0000E+00	3.1376E+00	3.1376E+00	0.000E+00
Pb-212	F	2.6942E-01	1.2002E-01	1.2128E-01	0.754E-01
Pb-214	F	3.6241E-01	1.0677E-01	1.0919E-01	0.512E-01
RA-226	B	5.9781E-01	1.1866E+00	1.1873E+00	0.982E+00
Th-230	#B	-1.9066E-01	2.1418E+01	2.1418E+01	0.165E+01
Th-234	#B	-7.5651E+00	3.3549E+01	3.3559E+01	0.308E+01
Tl-208	F	1.1220E-01	7.9199E-02	7.9490E-02	0.545E-01
U-235	B	5.5146E-02	7.3097E-02	7.3183E-02	0.577E-01

- All peaks for activity calculation had bad shape.
* - Activity omitted from total
& - Activity omitted from total and all peaks had bad shape.
< - MDA value printed.
A - Activity printed, but activity < MDA.
B - Activity < MDA and failed test.
C - Area < Critical level.
F - Failed fraction or key line test.
H - Halflife limit exceeded

---------- S U M M A R Y ----------

Total Activity (40.4 to 2576.4 keV) 2.007E+01 pCi/g

Laboratory: New World Technology

ORTEC g v - i (3263) Npp32 G53W3.10 11-MAY-2009 14:08:17
New World Technology Spectrum name: 3N000720.An1

Sample description
Parcel G 70-PGT-119-92 333g
5/07/09 13:38

Acquisition information
Start time: 11-May-2009 13:15:50
Live time: 2700
Real time: 2703

- -

***** S U M M A R Y O F N U C L I D E S I N S A M P L E *****

Nuclide		Time of Count Activity pCi/g	Uncertainty Counting pCi/g	2 Sigma Total pCi/g	MDA pCi/g
Ac-228	F	6.9138E-01	2.3239E-01	2.3630E-01	0.734E-01
AM-241	#B	-9.4119E-03	2.0293E-01	2.0293E-01	0.960E-01
Bi-212	F	4.3170E-01	3.7299E-01	3.7393E-01	0.267E+00
BI-214	F	3.3530E-01	1.7757E-01	1.7874E-01	0.105E+00
CO-60	#B	1.4277E-02	1.2518E-02	1.2549E-02	0.209E-01
CS-137		5.9839E-02	4.3245E-02	4.3399E-02	0.270E-01
EU-152	#F	1.3284E-01	8.4013E-02	8.4535E-02	0.906E-01
EU-154	F	1.2369E-01	1.0312E-01	1.0349E-01	0.536E-01
K-40		8.7803E+00	1.4136E+00	1.5154E+00	0.229E+00
Pa-234	B	8.8160E-02	6.9582E-02	6.9905E-02	0.123E+00
Pb-210		1.4488E+00	1.1747E+00	1.1799E+00	0.780E+00
Pb-212	F	4.4180E-01	1.1770E-01	1.2113E-01	0.803E-01
PB-214	F	4.9911E-01	1.3279E-01	1.3647E-01	0.767E-01
RA-226	F	9.8629E-01	1.1125E+00	1.1143E+00	0.894E+00
Th-230	#B	-4.2697E+00	1.9705E+01	1.9713E+01	0.822E+01
Th-234	#F	8.7440E-01	6.1067E-01	6.1780E-01	0.720E+00
Tl-208	F	2.6473E-01	8.5124E-02	8.6622E-02	0.308E-01
U-235	F	7.6489E-02	7.2585E-02	7.2753E-02	0.568E-01

- All peaks for activity calculation had bad shape.
* - Activity omitted from total
& - Activity omitted from total and all peaks had bad shape.
< - MDA value printed.
A - Activity printed, but activity < MDA.
B - Activity < MDA and failed test.
C - Area < Critical level.
F - Failed fraction or key line test.
H - Halflife limit exceeded

---------- S U M M A R Y ----------

Total Activity (39.2 to 2494.9 keV) 1.295E+01 pCi/g

Laboratory: New World Technology

ORTEC g v - i (3263) Npp32 G53W3.10 11-MAY-2009 15:37:48
New World Technology Spectrum name: 4N000409.An1

Sample description
Parcel G 70-PGT-119-93 325g
5/07/09 13:58

Acquisition information
Start time: 11-May-2009 14:37:26
Live time: 2700
Real time: 2703

- -

***** S U M M A R Y O F N U C L I D E S I N S A M P L E *****

Nuclide		Time of Count Activity pCi/g	Uncertainty 2 Sigma Counting pCi/g	Total pCi/g	MDA pCi/g
Ac-228	F	5.5351E-01	2.2858E-01	2.3114E-01	0.120E+00
AM-241	#B	-1.2629E-01	4.3146E-01	4.3146E-01	0.104E+00
Bi-212	B	1.3973E-01	3.1173E-01	3.1185E-01	0.294E+00
BI-214	F	6.1855E-01	1.6143E-01	1.6574E-01	0.606E-01
CO-60	#F	4.7878E-02	3.2000E-02	3.2133E-02	0.296E-01
CS-137	B	1.5327E-02	4.9920E-02	4.9929E-02	0.400E-01
EU-152	#F	1.2402E-01	1.1516E-01	1.1550E-01	0.902E-01
EU-154	F	9.9707E-02	9.0530E-02	9.0803E-02	0.746E-01
K-40		1.2257E+01	1.5742E+00	1.7490E+00	0.242E+00
Pa-234	B	1.2505E-01	1.3691E-01	1.3724E-01	0.215E+00
Pb-210	#F	0.0000E+00	5.8353E+00	5.8353E+00	0.000E+00
Pb-212	F	9.6863E-02	1.8038E-01	1.8049E-01	0.792E-01
Pb-214	F	3.7111E-01	1.3053E-01	1.3261E-01	0.627E-01
RA-226	B	1.4077E-01	1.2644E+00	1.2644E+00	0.106E+01
Th-230	#B	1.9287E+01	3.1015E+01	3.1122E+01	0.202E+02
Th-234	#B	-5.6242E+00	1.5874E+01	1.5886E+01	0.330E+01
Tl-208	F	3.5161E-01	9.2430E-02	9.4853E-02	0.448E-01
U-235	F	9.9611E-02	6.8675E-02	6.8975E-02	0.514E-01

- All peaks for activity calculation had bad shape.
* - Activity omitted from total
& - Activity omitted from total and all peaks had bad shape.
< - MDA value printed.
A - Activity printed, but activity < MDA.
B - Activity < MDA and failed test.
C - Area < Critical level.
F - Failed fraction or key line test.
H - Halflife limit exceeded

---------- S U M M A R Y ----------

Total Activity (40.4 to 2576.4 keV) 1.407E+01 pCi/g

Laboratory: New World Technology

ORTEC g v - i (3263) Npp32 G53W3.10 11-MAY-2009 12:06:11
New World Technology Spectrum name: 3N000718.An1

Sample description
Parcel G 70-PGT-119-94 377g
5/07/09 14:00

Acquisition information
Start time: 11-May-2009 11:18:10
Live time: 2700
Real time: 2703

- -

***** S U M M A R Y O F N U C L I D E S I N S A M P L E *****

Nuclide		Time of Count Activity pCi/g	Uncertainty Counting pCi/g	2 Sigma Total pCi/g	MDA pCi/g
Ac-228	F	1.9813E+00	3.0053E-01	3.2462E-01	0.278E-01
AM-241	#B	-2.3698E-02	5.1143E-01	5.1143E-01	0.577E-01
Bi-212	F	1.0023E+00	5.1371E-01	5.1740E-01	0.346E+00
BI-214	F	1.2344E+00	2.1898E-01	2.3146E-01	0.801E-01
CO-60	F	5.0798E-02	3.4142E-02	3.4284E-02	0.297E-01
CS-137	B	7.3314E-03	4.7761E-02	4.7763E-02	0.390E-01
EU-152	F	1.2076E-01	5.7565E-02	5.8193E-02	0.109E+00
EU-154	F	1.4641E-01	7.1020E-02	7.1766E-02	0.727E-01
K-40		8.2225E+00	1.3794E+00	1.4712E+00	0.270E+00
Pa-234	F	2.0110E-01	1.4390E-01	1.4471E-01	0.116E+00
Pb-210	F	1.0701E+00	1.0789E+00	1.0820E+00	0.865E+00
Pb-212		1.6297E+00	1.6442E-01	1.9538E-01	0.839E-01
PB-214		1.2554E+00	1.8022E-01	1.9684E-01	0.871E-01
RA-226		2.3052E+00	1.2862E+00	1.2948E+00	0.987E+00
Th-230	#B	-1.2957E+01	1.9796E+02	1.9797E+02	0.536E+01
Th-234	F	2.2824E+00	1.0792E+00	1.1065E+00	0.905E+00
Tl-208	F	6.6203E-01	1.1844E-01	1.2504E-01	0.399E-01
U-235	B	6.2197E-02	9.6538E-02	9.6622E-02	0.667E-01

- All peaks for activity calculation had bad shape.
* - Activity omitted from total
& - Activity omitted from total and all peaks had bad shape.
< - MDA value printed.
A - Activity printed, but activity < MDA.
B - Activity < MDA and failed test.
C - Area < Critical level.
F - Failed fraction or key line test.
H - Halflife limit exceeded

---------- S U M M A R Y ----------

Total Activity (39.2 to 2494.9 keV) 2.058E+01 pCi/g

Laboratory: New World Technology

ORTEC g v - i (3263) Npp32 G53W3.10 11-MAY-2009 17:02:36
New World Technology Spectrum name: 2N000475.An1

Sample description
Parcel G 70-PGT-119-95 315g
5/07/09 14:13

Acquisition information
Start time: 11-May-2009 15:28:58
Live time: 5400
Real time: 5405

- -

***** S U M M A R Y O F N U C L I D E S I N S A M P L E *****

Nuclide		Time of Count Activity pCi/g	Uncertainty Counting pCi/g	2 Sigma Total pCi/g	MDA pCi/g
Ac-228	F	7.2274E-01	1.5828E-01	1.6449E-01	0.142E+00
AM-241	#B	-9.7328E-03	7.5479E-02	7.5484E-02	0.336E-01
Bi-212	B	2.2175E-01	3.2428E-01	3.2457E-01	0.298E+00
BI-214	F	6.3750E-01	1.1815E-01	1.2433E-01	0.662E-01
CO-60	#F	4.6741E-02	3.8749E-02	3.8854E-02	0.199E-01
CS-137	#B	-7.9564E-03	5.6172E-02	5.6174E-02	0.497E-01
EU-152	B	1.7561E-02	9.3210E-02	9.3218E-02	0.782E-01
EU-154	F	6.3976E-02	7.6410E-02	7.6543E-02	0.623E-01
K-40		7.5426E+00	1.0097E+00	1.1133E+00	0.226E+00
Pa-234	#F	1.8831E-01	1.2769E-01	1.2849E-01	0.796E-01
Pb-210	B	1.7763E-01	7.5778E-01	7.5790E-01	0.643E+00
Pb-212	F	6.5699E-01	1.0178E-01	1.1032E-01	0.692E-01
PB-214		6.0753E-01	1.2739E-01	1.3303E-01	0.607E-01
RA-226	B	7.9283E-01	1.0529E+00	1.0541E+00	0.859E+00
Th-230	#B	-9.6911E+00	3.2517E+01	3.2542E+01	0.647E+01
Th-234	F	1.8780E+00	5.4222E-01	5.7827E-01	0.636E+00
Tl-208	F	1.8606E-01	6.5495E-02	6.6458E-02	0.463E-01
U-235	F	1.1149E-01	8.4829E-02	8.5134E-02	0.497E-01

- All peaks for activity calculation had bad shape.
* - Activity omitted from total
& - Activity omitted from total and all peaks had bad shape.
< - MDA value printed.
A - Activity printed, but activity < MDA.
B - Activity < MDA and failed test.
C - Area < Critical level.
F - Failed fraction or key line test.
H - Halflife limit exceeded

---------- S U M M A R Y ----------

Total Activity (40.6 to 2592.1 keV) 1.051E+01 pCi/g

Laboratory: New World Technology

ORTEC g v - i (3263) Npp32 G53W3.10 11-MAY-2009 15:30:25
New World Technology Spectrum name: 3N000721.An1

Sample description
Parcel G 70-PGT-119-96 349g
5/07/09 14:19

Acquisition information
Start time: 11-May-2009 14:34:45
Live time: 2700
Real time: 2703

- -

***** S U M M A R Y O F N U C L I D E S I N S A M P L E *****

Nuclide		Time of Count Activity pCi/g	Uncertainty Counting pCi/g	2 Sigma Total pCi/g	MDA pCi/g
Ac-228	F	7.3493E-01	2.4974E-01	2.5385E-01	0.706E-01
AM-241	#B	-1.7599E-02	1.6533E-01	1.6533E-01	0.497E-01
Bi-212	F	5.3273E-01	3.3433E-01	3.3593E-01	0.214E+00
BI-214	F	3.4059E-01	1.2033E-01	1.2209E-01	0.535E-01
CO-60	#B	-5.8336E-03	9.7876E-02	9.7876E-02	0.242E-01
CS-137		4.8875E-02	3.8481E-02	3.8597E-02	0.243E-01
EU-152	B	6.7329E-02	5.8000E-02	5.8195E-02	0.981E-01
EU-154	F	6.6545E-02	7.5589E-02	7.5734E-02	0.622E-01
K-40		1.1375E+01	1.5001E+00	1.6585E+00	0.115E+00
Pa-234	#B	6.5337E-03	1.4791E-02	1.4800E-02	0.110E+00
Pb-210	#F	1.4996E+00	1.3646E+00	1.3694E+00	0.847E+00
Pb-212	F	3.8231E-01	1.0432E-01	1.0722E-01	0.687E-01
PB-214	F	3.6876E-01	1.5081E-01	1.5260E-01	0.710E-01
RA-226	F	7.3702E-01	9.0301E-01	9.0426E-01	0.731E+00
Th-230	#B	-8.0103E+00	3.6663E+01	3.6679E+01	0.860E+01
Th-234	#B	5.5571E-01	9.6919E-01	9.7101E-01	0.737E+00
Tl-208	B	4.4897E-02	4.8236E-02	4.8313E-02	0.468E-01
U-235	B	1.1464E-02	5.2454E-02	5.2460E-02	0.430E-01

- All peaks for activity calculation had bad shape.
* - Activity omitted from total
& - Activity omitted from total and all peaks had bad shape.
< - MDA value printed.
A - Activity printed, but activity < MDA.
B - Activity < MDA and failed test.
C - Area < Critical level.
F - Failed fraction or key line test.
H - Halflife limit exceeded

---------- S U M M A R Y ----------

Total Activity (39.2 to 2494.9 keV) 1.528E+01 pCi/g

Laboratory: New World Technology

ORTEC g v - i (3263) Npp32 G53W3.10 12-MAY-2009 10:41:34
New World Technology Spectrum name: 1N000699.An1

Sample description
Parcel G 70-PGT-119-97 340g
5/07/09 14:22

Acquisition information
Start time: 12-May-2009 09:00:14
Live time: 5400
Real time: 5403

- -

***** S U M M A R Y O F N U C L I D E S I N S A M P L E *****

Nuclide		Time of Count Activity pCi/g	Uncertainty Counting pCi/g	2 Sigma Total pCi/g	MDA pCi/g
Ac-228	F	5.2038E-01	1.2769E-01	1.3171E-01	0.120E+00
AM-241	#	1.1510E-01	7.1882E-02	7.2513E-02	0.471E-01
Bi-212	#F	3.3931E-01	1.7004E-01	1.7131E-01	0.258E+00
BI-214	F	5.0824E-01	1.0379E-01	1.0830E-01	0.428E-01
CO-60	#F	2.9573E-02	2.4014E-02	2.4082E-02	0.116E-01
CS-137	F	2.3313E-02	2.7460E-02	2.7497E-02	0.204E-01
EU-152	C	6.6912E-02	6.6119E-02	6.6285E-02	0.514E-01
EU-154	#A	-2.9124E-02	3.0976E-01	3.0976E-01	0.309E-01
K-40		7.6621E+00	9.0009E-01	1.0184E+00	0.169E+00
Pa-234	F	7.2945E-02	7.5916E-02	7.6117E-02	0.525E-01
Pb-210		1.0174E+00	8.2832E-01	8.3198E-01	0.548E+00
Pb-212	F	5.8629E-01	7.7835E-02	8.6600E-02	0.479E-01
Pb-214		5.5394E-01	1.1065E-01	1.1603E-01	0.469E-01
RA-226		1.1716E+00	7.2471E-01	7.2864E-01	0.569E+00
Th-230	#B	-2.1070E+00	1.0669E+01	1.0672E+01	0.495E+01
Th-234	B	8.3337E-03	1.9987E-02	2.0007E-02	0.532E+00
Tl-208	F	2.8316E-01	4.8029E-02	5.1011E-02	0.223E-01
U-235	B	7.6869E-02	3.7735E-02	3.8093E-02	0.156E+00

- All peaks for activity calculation had bad shape.
* - Activity omitted from total
& - Activity omitted from total and all peaks had bad shape.
< - MDA value printed.
A - Activity printed, but activity < MDA.
B - Activity < MDA and failed test.
C - Area < Critical level.
F - Failed fraction or key line test.
H - Halflife limit exceeded

---------- S U M M A R Y ----------

Total Activity (39.3 to 2490.8 keV) 1.245E+01 pCi/g

Laboratory: New World Technology

ORTEC g v - i (3263) Npp32 G53W3.10 11-MAY-2009 15:47:16
New World Technology Spectrum name: 5N000430.An1

Sample description
Parcel G 70-PGT-119-98 370g
5/07/09 14:20

Acquisition information
Start time: 11-May-2009 14:33:52
Live time: 2700
Real time: 2702

- -

***** S U M M A R Y O F N U C L I D E S I N S A M P L E *****

Nuclide		Time of Count Activity pCi/g	Uncertainty Counting pCi/g	2 Sigma Total pCi/g	MDA pCi/g
Ac-228	F	8.7727E-01	2.3275E-01	2.3900E-01	0.774E-01
AM-241	#B	9.9799E-03	7.2938E-02	7.2942E-02	0.617E-01
Bi-212		7.4513E-01	3.6574E-01	3.6859E-01	0.288E+00
BI-214	F	8.7061E-01	1.7879E-01	1.8644E-01	0.495E-01
CO-60	#B	-7.9789E-03	1.3820E-02	1.3828E-02	0.262E-01
CS-137	B	3.3418E-03	3.8446E-02	3.8447E-02	0.313E-01
EU-152	#B	3.5717E-02	3.8183E-02	3.8266E-02	0.102E+00
EU-154	B	3.7809E-02	6.4596E-02	6.4651E-02	0.745E-01
K-40		1.3817E+01	1.5711E+00	1.7907E+00	0.348E+00
Pa-234	#F	1.3440E-01	1.0541E-01	1.0591E-01	0.550E-01
Pb-210	#B	1.1392E-02	1.0536E+00	1.0536E+00	0.839E+00
Pb-212		5.7765E-01	1.2277E-01	1.2834E-01	0.826E-01
Pb-214	F	5.7858E-01	1.5833E-01	1.6248E-01	0.713E-01
RA-226	B	4.6919E-01	1.1720E+00	1.1724E+00	0.964E+00
Th-230	#F	9.0270E+00	1.2050E+01	1.2110E+01	0.786E+01
Th-234	#B	-2.2424E-01	8.0543E-01	8.0579E-01	0.812E+00
Tl-208	F	3.3093E-01	6.6845E-02	6.9787E-02	0.292E-01
U-235	F	1.2766E-01	7.3400E-02	7.3862E-02	0.540E-01

- All peaks for activity calculation had bad shape.
* - Activity omitted from total
& - Activity omitted from total and all peaks had bad shape.
< - MDA value printed.
A - Activity printed, but activity < MDA.
B - Activity < MDA and failed test.
C - Area < Critical level.
F - Failed fraction or key line test.
H - Halflife limit exceeded

---------- S U M M A R Y ----------

Total Activity (38.2 to 2445.5 keV) 1.792E+01 pCi/g

Laboratory: New World Technology

ORTEC g v - i (3263) Npp32 G53W3.12 5/18/2009 7:49:03 PM
New World Technology Spectrum name: 6N000588.An1

Sample description
Parcel G 70-PGT-119-99 321g
5/15/09 12:51

Acquisition information
Start time: 5/18/2009 6:59:51 PM
Live time: 2700
Real time: 2704

- -

***** S U M M A R Y O F N U C L I D E S I N S A M P L E *****

Nuclide		Time of Count Activity pCi/g	Uncertainty Counting pCi/g	2 Sigma Total pCi/g	MDA pCi/g
Ac-228	B	4.3421E-02	2.9002E-02	2.9127E-02	0.183E+00
AM-241	A	4.2979E-02	1.0987E-01	1.0992E-01	0.887E-01
Bi-212	F	4.9787E-01	2.9137E-01	2.9298E-01	0.187E+00
BI-214	#	2.0926E-01	1.0151E-01	1.0230E-01	0.519E-01
CO-60	#B	6.5728E-04	3.9139E-03	3.9141E-03	0.950E-02
CS-137	#B	-3.5532E-02	1.7436E-01	1.7437E-01	0.496E-01
EU-152	B	4.0615E-02	4.6898E-02	4.6986E-02	0.622E-01
EU-154	F	8.1918E-02	4.2303E-02	4.2695E-02	0.462E-01
K-40	#	4.8127E+00	1.1099E+00	1.1496E+00	0.311E+00
Pa-234	F	2.1054E-01	1.4794E-01	1.4881E-01	0.808E-01
Pb-210	#B	-8.3664E-01	2.6532E+00	2.6540E+00	0.945E+00
Pb-212	F	1.0360E-01	8.9951E-02	9.0200E-02	0.624E-01
PB-214	F	1.7964E-01	9.9240E-02	9.9885E-02	0.573E-01
RA-226	B	1.7985E-01	1.0299E+00	1.0300E+00	0.858E+00
Th-230	#B	3.8738E+00	7.0210E+00	7.0400E+00	0.544E+01
Th-234	B	1.4102E-01	1.0099E+00	1.0100E+00	0.762E+00
Tl-208	#F	3.0100E-02	2.8737E-02	2.8991E-02	0.273E-01
U-235	F	1.1248E-01	8.2474E-02	8.2794E-02	0.488E-01

- All peaks for activity calculation had bad shape.
* - Activity omitted from total
& - Activity omitted from total and all peaks had bad shape.
< - MDA value printed.
A - Activity printed, but activity < MDA.
B - Activity < MDA and failed test.
C - Area < Critical level.
F - Failed fraction or key line test.
H - Halflife limit exceeded

---------- S U M M A R Y ----------

Total Activity (41.6 to 2659.6 keV) 5.812E+00 pCi/g

Laboratory: New World Technology

ORTEC g v - i (3263) Npp32 G53W3.12 5/18/2009 7:49:44 PM
New World Technology Spectrum name: 7N000342.An1

Sample description
Parcel G 70-PGT-119-100 305g
5/15/09 12:54

Acquisition information
Start time: 5/18/2009 7:02:41 PM
Live time: 2700
Real time: 2704

- -

***** S U M M A R Y O F N U C L I D E S I N S A M P L E *****

Nuclide		Time of Count Activity pCi/g	Uncertainty Counting pCi/g	2 Sigma Total pCi/g	MDA pCi/g
Ac-228	B	1.8942E-01	1.3656E-01	1.3706E-01	0.195E+00
AM-241	#A	-2.8930E-01	2.4154E+00	2.4155E+00	0.869E+00
Bi-212	#B	-3.5836E-01	6.4252E-01	6.4252E-01	0.253E+00
BI-214	#	3.5403E-01	1.4535E-01	1.4693E-01	0.605E-01
CO-60	#B	-1.8127E-02	1.2943E-01	1.2944E-01	0.229E-01
CS-137	B	3.0062E-04	5.1230E-02	5.1230E-02	0.510E-01
EU-152	B	3.5828E-02	1.0920E-01	1.0923E-01	0.157E+00
EU-154	#B	3.6170E-02	5.0569E-02	5.0633E-02	0.119E+00
K-40		4.6839E+00	1.1203E+00	1.1576E+00	0.492E+00
Pa-234	B	1.2843E-01	1.2591E-01	1.2629E-01	0.227E+00
Pb-210	#F	0.0000E+00	3.2338E+00	3.2338E+00	0.000E+00
Pb-212	B	8.6795E-02	1.4798E-01	1.4808E-01	0.108E+00
PB-214	F	2.5196E-01	1.7799E-01	1.7870E-01	0.984E-01
RA-226	B	7.7599E-01	1.5242E+00	1.5250E+00	0.125E+01
Th-230	#B	-7.4595E+00	1.1842E+02	1.1842E+02	0.150E+02
Th-234	#B	-4.6515E+00	1.3439E+01	1.3449E+01	0.580E+01
Tl-208	B	6.3838E-02	8.7738E-02	8.8112E-02	0.723E-01
U-235	F	8.8264E-02	9.5803E-02	9.5972E-02	0.743E-01

- All peaks for activity calculation had bad shape.
* - Activity omitted from total
& - Activity omitted from total and all peaks had bad shape.
< - MDA value printed.
A - Activity printed, but activity < MDA.
B - Activity < MDA and failed test.
C - Area < Critical level.
F - Failed fraction or key line test.
H - Halflife limit exceeded

---------- S U M M A R Y ----------

Total Activity (42.1 to 2684.5 keV) 5.290E+00 pCi/g

Laboratory: New World Technology

ORTEC g v - i (3263) Npp32 G53W3.12 5/18/2009 8:44:32 PM
New World Technology Spectrum name: 6N000589.An1

Sample description
Parcel G 70-PGT-119-101 328g
5/15/09 12:57

Acquisition information
Start time: 5/18/2009 7:51:36 PM
Live time: 2700
Real time: 2704

- -

***** S U M M A R Y O F N U C L I D E S I N S A M P L E *****

Nuclide		Time of Count Activity pCi/g	Uncertainty Counting pCi/g	2 Sigma Total pCi/g	MDA pCi/g
Ac-228	F	2.3219E-01	1.9338E-01	1.9391E-01	0.175E+00
AM-241	#	1.3306E-01	1.2599E-01	1.2647E-01	0.866E-01
Bi-212	#F	7.6324E-01	3.7018E-01	3.7314E-01	0.148E+00
BI-214	#	4.4066E-01	1.7747E-01	1.7948E-01	0.715E-01
CO-60	#B	4.4244E-03	1.1326E-02	1.1330E-02	0.929E-02
CS-137	#B	-6.1842E-02	8.9535E+00	8.9535E+00	0.439E-01
EU-152	F	1.7923E-01	1.1899E-01	1.1966E-01	0.894E-01
EU-154	F	8.3527E-02	7.2320E-02	7.2559E-02	0.506E-01
K-40		7.9159E+00	1.2839E+00	1.3750E+00	0.282E+00
Pa-234	F	1.6947E-01	1.1338E-01	1.1411E-01	0.107E+00
Pb-210	#B	-3.4704E-01	1.7528E+00	1.7530E+00	0.978E+00
Pb-212	F	2.0200E-01	8.8084E-02	8.9050E-02	0.672E-01
PB-214	F	3.3289E-01	1.4321E-01	1.4475E-01	0.698E-01
RA-226	F	9.1226E-01	9.3838E-01	9.4023E-01	0.746E+00
Th-230	B	1.6912E+00	8.7976E+00	8.8005E+00	0.718E+01
Th-234	#B	-3.2052E-01	1.2794E+00	1.2799E+00	0.803E+00
Tl-208	#F	2.3679E-01	8.9801E-02	9.4715E-02	0.199E-01
U-235	F	7.8029E-02	1.2289E-01	1.2299E-01	0.523E-01

- All peaks for activity calculation had bad shape.
* - Activity omitted from total
& - Activity omitted from total and all peaks had bad shape.
< - MDA value printed.
A - Activity printed, but activity < MDA.
B - Activity < MDA and failed test.
C - Area < Critical level.
F - Failed fraction or key line test.
H - Halflife limit exceeded

---------- S U M M A R Y ----------

Total Activity (41.6 to 2659.6 keV) 1.002E+01 pCi/g

Laboratory: New World Technology

ORTEC g v - i (3263) Npp32 G53W3.12 5/18/2009 10:16:05 PM
New World Technology Spectrum name: 7N000343.An1

Sample description
Parcel G 70-PGT-119-102 328g
5/15/09 13:07

Acquisition information
Start time: 5/18/2009 8:44:12 PM
Live time: 5400
Real time: 5407

- -

***** S U M M A R Y O F N U C L I D E S I N S A M P L E *****

Nuclide		Time of Count Activity pCi/g	Uncertainty Counting pCi/g	2 Sigma Total pCi/g	MDA pCi/g
Ac-228	F	5.7335E-01	1.4574E-01	1.5000E-01	0.159E+00
AM-241	A	6.4970E-02	7.9523E-01	7.9525E-01	0.677E+00
Bi-212	B	1.6479E-01	2.1234E-01	2.1258E-01	0.282E+00
BI-214		6.1252E-01	1.2959E-01	1.3482E-01	0.486E-01
CO-60	#B	1.9836E-03	2.0126E-02	2.0126E-02	0.175E-01
CS-137	#B	-3.4615E-02	1.2467E-01	1.2468E-01	0.395E-01
EU-152	B	7.2799E-02	6.3150E-02	6.3359E-02	0.828E-01
EU-154	B	6.6780E-02	5.7672E-02	5.7864E-02	0.869E-01
K-40		7.3749E+00	9.3025E-01	1.0372E+00	0.324E+00
Pa-234	B	7.2223E-02	8.2945E-02	8.3127E-02	0.125E+00
Pb-210	#F	0.0000E+00	1.5084E+01	1.5084E+01	0.000E+00
Pb-212	F	3.6980E-01	1.0209E-01	1.0486E-01	0.786E-01
PB-214	F	5.1230E-01	1.1872E-01	1.2304E-01	0.683E-01
RA-226	B	7.6919E-01	1.1835E+00	1.1845E+00	0.970E+00
Th-230	B	1.6480E+00	3.3998E+01	3.3999E+01	0.283E+02
Th-234	#B	-7.2953E+00	1.9757E+01	1.9773E+01	0.410E+01
Tl-208	F	2.4249E-01	8.5429E-02	9.0823E-02	0.567E-01
U-235	F	8.4838E-02	6.3599E-02	6.3835E-02	0.493E-01

- All peaks for activity calculation had bad shape.
* - Activity omitted from total
& - Activity omitted from total and all peaks had bad shape.
< - MDA value printed.
A - Activity printed, but activity < MDA.
B - Activity < MDA and failed test.
C - Area < Critical level.
F - Failed fraction or key line test.
H - Halflife limit exceeded

---------- S U M M A R Y ----------

Total Activity (42.1 to 2684.5 keV) 9.770E+00 pCi/g

Laboratory: New World Technology

ORTEC g v - i (3263) Npp32 G53W3.12 5/18/2009 9:34:50 PM
New World Technology Spectrum name: 6N000590.An1

Sample description
Parcel G 70-PGT-119-103 328g
5/15/09 13:05

Acquisition information
Start time: 5/18/2009 8:46:25 PM
Live time: 2700
Real time: 2705

- -

***** S U M M A R Y O F N U C L I D E S I N S A M P L E *****

Nuclide		Time of Count Activity pCi/g	Uncertainty Counting pCi/g	2 Sigma Total pCi/g	MDA pCi/g
Ac-228	F	4.4269E-01	2.1169E-01	2.1346E-01	0.180E+00
AM-241	#	1.6766E-01	1.5849E-01	1.5910E-01	0.977E-01
Bi-212	F	4.2617E-01	3.0533E-01	3.0645E-01	0.196E+00
BI-214	#	5.3493E-01	1.5060E-01	1.5406E-01	0.615E-01
CO-60	#B	4.1182E-03	8.5014E-03	8.5052E-03	0.101E-01
CS-137	#B	-2.5248E-02	8.3075E-02	8.3089E-02	0.391E-01
EU-152	F	8.7747E-02	7.3237E-02	7.3499E-02	0.691E-01
EU-154	F	8.0847E-02	6.1631E-02	6.1894E-02	0.456E-01
K-40	#	9.8296E+00	1.3388E+00	1.4717E+00	0.172E+00
Pa-234	F	8.7741E-02	1.2977E-01	1.2994E-01	0.500E-01
Pb-210	#B	-1.2363E+00	4.1821E+00	4.1831E+00	0.949E+00
Pb-212	F	3.4846E-01	1.0563E-01	1.0801E-01	0.703E-01
PB-214	F	4.2746E-01	1.7842E-01	1.8045E-01	0.777E-01
RA-226		1.1833E+00	1.0342E+00	1.0370E+00	0.815E+00
Th-230	#B	-1.5206E+00	3.3026E+00	3.3088E+00	0.289E+01
Th-234	#F	8.0714E-01	1.0758E+00	1.0793E+00	0.800E+00
Tl-208	F	1.1020E-01	3.4595E-02	3.7325E-02	0.584E-01
U-235	F	6.1043E-02	8.3411E-02	8.3504E-02	0.555E-01

- All peaks for activity calculation had bad shape.
* - Activity omitted from total
& - Activity omitted from total and all peaks had bad shape.
< - MDA value printed.
A - Activity printed, but activity < MDA.
B - Activity < MDA and failed test.
C - Area < Critical level.
F - Failed fraction or key line test.
H - Halflife limit exceeded

---------- S U M M A R Y ----------

Total Activity (41.6 to 2659.6 keV) 1.336E+01 pCi/g

Laboratory: New World Technology

ORTEC g v - i (3263) Npp32 G53W3.12 5/18/2009 10:27:58 PM
New World Technology Spectrum name: 6N000591.An1

Sample description
Parcel G 70-PGT-119-104 329g
5/15/09 13:10

Acquisition information
Start time: 5/18/2009 9:36:30 PM
Live time: 2700
Real time: 2705

- -

***** S U M M A R Y O F N U C L I D E S I N S A M P L E *****

Nuclide		Time of Count Activity pCi/g	Uncertainty Counting pCi/g	2 Sigma Total pCi/g	MDA pCi/g
Ac-228	F	3.9744E-01	2.1572E-01	2.1712E-01	0.162E+00
AM-241	#A	6.1906E-02	9.8539E-02	9.8673E-02	0.730E-01
Bi-212	#B	-1.8267E-02	5.4070E-01	5.4070E-01	0.522E-01
BI-214	#	3.4565E-01	1.3709E-01	1.3869E-01	0.590E-01
CO-60	#F	2.8353E-02	3.2560E-02	3.2606E-02	0.157E-01
CS-137	#B	-4.2137E-02	2.0113E-01	2.0115E-01	0.428E-01
EU-152	B	4.7354E-02	8.1968E-02	8.2037E-02	0.643E-01
EU-154	F	1.0741E-01	8.6471E-02	8.6802E-02	0.641E-01
K-40	#	4.5295E+00	1.0132E+00	1.0517E+00	0.279E+00
Pa-234	#F	1.2015E-01	1.4710E-01	1.4739E-01	0.898E-01
Pb-210	#B	-1.1348E+00	3.1825E+00	3.1837E+00	0.951E+00
Pb-212		2.3166E-01	9.3294E-02	9.4493E-02	0.717E-01
PB-214	F	2.2512E-01	1.0837E-01	1.0930E-01	0.776E-01
RA-226	B	7.3424E-01	1.0764E+00	1.0774E+00	0.871E+00
Th-230	B	2.5380E+00	8.0106E+00	8.0177E+00	0.648E+01
Th-234	#F	8.6400E-01	7.0662E-01	7.1264E-01	0.864E+00
Tl-208	#F	7.0577E-02	3.0831E-02	3.2110E-02	0.540E-01
U-235	F	9.4323E-02	7.0763E-02	7.1025E-02	0.518E-01

- All peaks for activity calculation had bad shape.
* - Activity omitted from total
& - Activity omitted from total and all peaks had bad shape.
< - MDA value printed.
A - Activity printed, but activity < MDA.
B - Activity < MDA and failed test.
C - Area < Critical level.
F - Failed fraction or key line test.
H - Halflife limit exceeded

---------- S U M M A R Y ----------

Total Activity (41.6 to 2659.6 keV) 5.824E+00 pCi/g

Laboratory: New World Technology

ORTEC g v - i (3263) Npp32 G53W3.10 27-MAY-2009 23:42:26
New World Technology Spectrum name: 5N000520.An1

Sample description
Parcel G 70-PGT-119-105 352g
5/27/09 11:12

Acquisition information
Start time: 27-May-2009 22:55:23
Live time: 2700
Real time: 2701

- -

***** S U M M A R Y O F N U C L I D E S I N S A M P L E *****

Nuclide		Time of Count Activity pCi/g	Uncertainty Counting pCi/g	2 Sigma Total pCi/g	MDA pCi/g
Ac-228	F	3.5204E-01	1.5932E-01	1.6081E-01	0.851E-01
AM-241	#B	-3.0458E-02	5.2611E-01	5.2611E-01	0.431E-01
Bi-212	#B	5.0322E-02	5.8107E-02	5.8189E-02	0.283E+00
BI-214	F	4.8974E-01	1.2196E-01	1.2553E-01	0.360E-01
CO-60	#B	-3.3863E-02	2.0436E-01	2.0437E-01	0.279E-01
CS-137	B	3.0728E-02	4.9744E-02	4.9780E-02	0.378E-01
EU-152	B	3.3076E-02	4.9306E-02	4.9362E-02	0.983E-01
EU-154	F	1.0421E-01	9.1969E-02	9.2262E-02	0.621E-01
K-40		7.2175E+00	1.2038E+00	1.2847E+00	0.377E+00
Pa-234	#B	2.0676E-02	2.7497E-02	2.7542E-02	0.121E+00
Pb-210	#B	-2.1465E-01	1.4732E+00	1.4733E+00	0.882E+00
Pb-212	F	2.2187E-01	8.9517E-02	9.0662E-02	0.703E-01
Pb-214	F	3.6081E-01	1.5736E-01	1.5900E-01	0.699E-01
RA-226	B	5.1591E-02	9.1113E-01	9.1114E-01	0.769E+00
Th-230	#B	5.8904E+00	1.0862E+01	1.0890E+01	0.680E+01
Th-234	#B	-8.5695E-01	3.2395E+00	3.2408E+00	0.797E+00
Tl-208	F	8.5541E-02	5.4182E-02	5.4429E-02	0.335E-01
U-235	B	3.6771E-02	5.6788E-02	5.6838E-02	0.429E-01

- All peaks for activity calculation had bad shape.
* - Activity omitted from total
& - Activity omitted from total and all peaks had bad shape.
< - MDA value printed.
A - Activity printed, but activity < MDA.
B - Activity < MDA and failed test.
C - Area < Critical level.
F - Failed fraction or key line test.
H - Halflife limit exceeded

---------- S U M M A R Y ----------

Total Activity (38.2 to 2445.7 keV) 8.727E+00 pCi/g

Laboratory: New World Technology

ORTEC g v - i (3263) Npp32 G53W3.10 28-MAY-2009 01:25:05
New World Technology Spectrum name: 5N000522.An1

Sample description
Parcel G 70-PGT-119-105DUP 352g
5/27/09 11:12

Acquisition information
Start time: 28-May-2009 00:37:41
Live time: 2700
Real time: 2702

- -

***** S U M M A R Y O F N U C L I D E S I N S A M P L E *****

Nuclide		Time of Count Activity pCi/g	Uncertainty Counting pCi/g	2 Sigma Total pCi/g	MDA pCi/g
Ac-228	F	4.2756E-01	1.7890E-01	1.8085E-01	0.739E-01
AM-241	#B	-2.8005E-02	6.9680E-01	6.9680E-01	0.681E-01
Bi-212	B	2.7857E-02	2.4914E-01	2.4914E-01	0.239E+00
BI-214	F	3.8500E-01	1.1517E-01	1.1751E-01	0.400E-01
CO-60	#B	1.3758E-02	1.3480E-02	1.3506E-02	0.296E-01
CS-137		7.5493E-02	4.7193E-02	4.7417E-02	0.297E-01
EU-152	B	3.5833E-02	7.8718E-02	7.8759E-02	0.901E-01
EU-154	F	1.2592E-01	5.4957E-02	5.5670E-02	0.687E-01
K-40	#	6.8542E+00	1.2740E+00	1.3434E+00	0.445E+00
Pa-234	#B	8.6820E-02	8.4881E-02	8.5138E-02	0.111E+00
Pb-210	B	6.3239E-01	1.3569E+00	1.3577E+00	0.919E+00
Pb-212	F	1.7903E-01	8.0611E-02	8.1441E-02	0.657E-01
Pb-214	F	2.3899E-01	9.2280E-02	9.3504E-02	0.547E-01
RA-226	B	7.5110E-01	9.5374E-01	9.5498E-01	0.768E+00
Th-230	#B	-4.0766E-01	3.3157E+00	3.3161E+00	0.239E+01
Th-234	#B	-4.8402E-01	1.5546E+00	1.5555E+00	0.789E+00
Tl-208	#F	1.0878E-01	6.2878E-02	6.3222E-02	0.356E-01
U-235	F	7.3224E-02	6.1135E-02	6.1318E-02	0.467E-01

- All peaks for activity calculation had bad shape.
* - Activity omitted from total
& - Activity omitted from total and all peaks had bad shape.
< - MDA value printed.
A - Activity printed, but activity < MDA.
B - Activity < MDA and failed test.
C - Area < Critical level.
F - Failed fraction or key line test.
H - Halflife limit exceeded

---------- S U M M A R Y ----------

Total Activity (38.2 to 2445.7 keV) 8.342E+00 pCi/g

Laboratory: New World Technology

ORTEC g v - i (3263) Npp32 G53W3.10 28-MAY-2009 00:04:07
New World Technology Spectrum name: 4N000504.An1

Sample description
Parcel G 70-PGT-119-106 375g
5/27/09 11:15

Acquisition information
Start time: 27-May-2009 23:15:47
Live time: 2700
Real time: 2705

- -

***** S U M M A R Y O F N U C L I D E S I N S A M P L E *****

Nuclide		Time of Count Activity pCi/g	Uncertainty Counting pCi/g	2 Sigma Total pCi/g	MDA pCi/g
Ac-228	F	5.8737E-01	1.6630E-01	1.7024E-01	0.567E-01
AM-241	B	1.0720E-01	4.4317E-01	4.4326E-01	0.365E+00
Bi-212	F	4.4554E-01	3.3575E-01	3.3686E-01	0.270E+00
BI-214	#F	6.0620E-01	1.6407E-01	1.6815E-01	0.718E-01
CO-60	#B	3.1039E-03	7.2590E-03	7.2614E-03	0.927E-02
CS-137		5.9132E-02	4.9291E-02	4.9423E-02	0.260E-01
EU-152	F	1.3471E-01	6.0245E-02	6.0991E-02	0.128E+00
EU-154	F	1.2415E-01	1.1029E-01	1.1064E-01	0.887E-01
K-40		1.4808E+01	1.5304E+00	1.7861E+00	0.921E-01
Pa-234	F	1.1436E-01	8.2129E-02	8.2590E-02	0.992E-01
Pb-210	#F	0.0000E+00	3.9061E+00	3.9061E+00	0.000E+00
Pb-212	F	2.1936E-01	9.5818E-02	9.6865E-02	0.756E-01
Pb-214	F	3.0206E-01	1.2629E-01	1.2772E-01	0.671E-01
RA-226	B	6.5067E-02	1.1670E+00	1.1671E+00	0.975E+00
Th-230	#B	-1.7735E+01	9.6378E+01	9.6407E+01	0.172E+02
Th-234	#B	-6.9568E+00	2.0756E+01	2.0769E+01	0.231E+01
Tl-208	F	1.5455E-01	7.8940E-02	7.9493E-02	0.458E-01
U-235	F	9.2504E-02	7.2490E-02	7.2736E-02	0.554E-01

- All peaks for activity calculation had bad shape.
* - Activity omitted from total
& - Activity omitted from total and all peaks had bad shape.
< - MDA value printed.
A - Activity printed, but activity < MDA.
B - Activity < MDA and failed test.
C - Area < Critical level.
F - Failed fraction or key line test.
H - Halflife limit exceeded

---------- S U M M A R Y ----------

Total Activity (40.4 to 2576.4 keV) 1.727E+01 pCi/g

Laboratory: New World Technology

ORTEC g v - i (3263) Npp32 G53W3.10 28-MAY-2009 00:56:45
New World Technology Spectrum name: 4N000505.An1

Sample description
Parcel G 70-PGT-119-107 399g
5/27/09 11:18

Acquisition information
Start time: 28-May-2009 00:07:00
Live time: 2700
Real time: 2705

- -

***** S U M M A R Y O F N U C L I D E S I N S A M P L E *****

Nuclide		Time of Count Activity pCi/g	Uncertainty Counting pCi/g	2 Sigma Total pCi/g	MDA pCi/g
Ac-228	F	7.3993E-01	1.8874E-01	1.9422E-01	0.690E-01
AM-241	#B	1.8861E-01	4.4594E-01	4.4621E-01	0.327E+00
Bi-212	B	9.0181E-02	3.1048E-01	3.1053E-01	0.284E+00
BI-214	F	6.4705E-01	1.6101E-01	1.6574E-01	0.691E-01
CO-60	#B	2.3253E-02	4.2033E-02	4.2057E-02	0.258E-01
CS-137		7.9104E-02	4.6948E-02	4.7195E-02	0.306E-01
EU-152	B	6.9720E-02	8.3341E-02	8.3486E-02	0.117E+00
EU-154	F	1.5429E-01	9.6914E-02	9.7522E-02	0.728E-01
K-40		1.6219E+01	1.5527E+00	1.8515E+00	0.865E-01
Pa-234	B	3.9729E-02	2.4831E-02	2.5015E-02	0.147E+00
Pb-210	#F	0.0000E+00	2.1667E+00	2.1667E+00	0.000E+00
Pb-212	F	4.0069E-01	1.0815E-01	1.1121E-01	0.740E-01
Pb-214	F	5.0072E-01	1.6231E-01	1.6535E-01	0.784E-01
RA-226	B	8.5610E-01	1.1672E+00	1.1685E+00	0.942E+00
Th-230	B	4.9317E+00	2.4709E+01	2.4718E+01	0.211E+02
Th-234	#B	-6.4125E+00	2.0760E+01	2.0771E+01	0.231E+01
Tl-208	F	1.4798E-01	5.8114E-02	5.8801E-02	0.420E-01
U-235	F	7.1382E-02	7.6492E-02	7.6631E-02	0.573E-01

- All peaks for activity calculation had bad shape.
* - Activity omitted from total
& - Activity omitted from total and all peaks had bad shape.
< - MDA value printed.
A - Activity printed, but activity < MDA.
B - Activity < MDA and failed test.
C - Area < Critical level.
F - Failed fraction or key line test.
H - Halflife limit exceeded

---------- S U M M A R Y ----------

Total Activity (40.4 to 2576.4 keV) 1.873E+01 pCi/g

Laboratory: New World Technology

ORTEC g v - i (3263) Npp32 G53W3.12 5/28/2009 1:21:16 AM
New World Technology Spectrum name: 6N000655.An1

Sample description
Parcel G 70-PGT-119-108 397g
5/27/09 11:22

Acquisition information
Start time: 5/28/2009 12:33:56 AM
Live time: 2700
Real time: 2705

- -

***** S U M M A R Y O F N U C L I D E S I N S A M P L E *****

Nuclide		Time of Count Activity pCi/g	Uncertainty Counting pCi/g	2 Sigma Total pCi/g	MDA pCi/g
Ac-228	F	5.7443E-01	2.0130E-01	2.0442E-01	0.132E+00
AM-241	A	3.5383E-02	1.0639E-01	1.0643E-01	0.864E-01
Bi-212	F	5.8768E-01	3.0037E-01	3.0254E-01	0.180E+00
BI-214	#	5.2120E-01	1.1980E-01	1.2391E-01	0.468E-01
CO-60	#F	2.1520E-02	2.4520E-02	2.4555E-02	0.121E-01
CS-137	B	1.5681E-02	2.9954E-02	2.9969E-02	0.225E-01
EU-152	B	3.2642E-02	1.2302E-01	1.2304E-01	0.678E-01
EU-154	F	7.5167E-02	7.8229E-02	7.8409E-02	0.574E-01
K-40		1.2027E+01	1.3434E+00	1.5376E+00	0.142E+00
Pa-234	F	1.4920E-01	1.1753E-01	1.1807E-01	0.716E-01
Pb-210	#B	-1.7472E-01	1.3271E+00	1.3272E+00	0.822E+00
Pb-212	F	4.8455E-01	9.5007E-02	1.0005E-01	0.622E-01
PB-214	F	3.9459E-01	1.2988E-01	1.3224E-01	0.631E-01
RA-226		1.1314E+00	9.7443E-01	9.7717E-01	0.770E+00
Th-230	B	1.8253E+00	6.8416E+00	6.8459E+00	0.555E+01
Th-234	F	1.5145E+00	7.0269E-01	7.2114E-01	0.718E+00
Tl-208	F	2.8529E-01	8.1820E-02	8.9501E-02	0.165E-01
U-235	F	7.5392E-02	6.3893E-02	6.4079E-02	0.413E-01

- All peaks for activity calculation had bad shape.
* - Activity omitted from total
& - Activity omitted from total and all peaks had bad shape.
< - MDA value printed.
A - Activity printed, but activity < MDA.
B - Activity < MDA and failed test.
C - Area < Critical level.
F - Failed fraction or key line test.
H - Halflife limit exceeded

---------- S U M M A R Y ----------

Total Activity (41.6 to 2659.6 keV) 1.608E+01 pCi/g

Laboratory: New World Technology

ORTEC g v - i (3263) Npp32 G53W3.10 28-MAY-2009 01:45:33
New World Technology Spectrum name: 4N000506.An1

Sample description
Parcel G 70-PGT-119-109 383g
5/27/09 11:25

Acquisition information
Start time: 28-May-2009 00:59:51
Live time: 2700
Real time: 2706

- -

***** S U M M A R Y O F N U C L I D E S I N S A M P L E *****

Nuclide		Time of Count Activity pCi/g	Uncertainty Counting pCi/g	2 Sigma Total pCi/g	MDA pCi/g
Ac-228	F	1.1546E+00	2.7020E-01	2.7950E-01	0.869E-01
AM-241	#B	1.5735E-01	4.4815E-01	4.4834E-01	0.351E+00
Bi-212	B	2.0486E-01	3.6017E-01	3.6039E-01	0.386E+00
BI-214	F	7.9664E-01	1.4811E-01	1.5581E-01	0.688E-01
CO-60	#B	4.4273E-03	1.3940E-02	1.3943E-02	0.112E-01
CS-137		5.8160E-02	5.4938E-02	5.5053E-02	0.403E-01
EU-152	F	1.2732E-01	9.8431E-02	9.8841E-02	0.126E+00
EU-154	F	1.2086E-01	1.4604E-01	1.4629E-01	0.971E-01
K-40		1.9064E+01	1.7181E+00	2.0874E+00	0.901E-01
Pa-234	B	1.1120E-01	8.9828E-02	9.0227E-02	0.211E+00
Pb-210	#F	0.0000E+00	2.1761E+00	2.1761E+00	0.000E+00
Pb-212	F	7.2442E-01	1.2740E-01	1.3576E-01	0.842E-01
Pb-214	F	5.8164E-01	1.2812E-01	1.3327E-01	0.667E-01
RA-226	F	1.1999E+00	1.3287E+00	1.3310E+00	0.107E+01
Th-230	#B	-1.7764E+01	1.0892E+02	1.0894E+02	0.186E+02
Th-234	#B	-5.4133E+00	1.6611E+01	1.6621E+01	0.286E+01
Tl-208	F	3.7757E-01	1.0198E-01	1.0451E-01	0.490E-01
U-235	B	5.4612E-02	7.6890E-02	7.6971E-02	0.612E-01

- All peaks for activity calculation had bad shape.
* - Activity omitted from total
& - Activity omitted from total and all peaks had bad shape.
< - MDA value printed.
A - Activity printed, but activity < MDA.
B - Activity < MDA and failed test.
C - Area < Critical level.
F - Failed fraction or key line test.
H - Halflife limit exceeded

---------- S U M M A R Y ----------

Total Activity (40.4 to 2576.4 keV) 2.276E+01 pCi/g

Laboratory: New World Technology

ORTEC g v - i (3263) Npp32 G53W3.12 5/28/2009 2:13:10 AM
New World Technology Spectrum name: 6N000656.An1

Sample description
Parcel G 70-PGT-119-110 391g
5/27/09 11:33

Acquisition information
Start time: 5/28/2009 1:23:54 AM
Live time: 2700
Real time: 2705

- -

***** S U M M A R Y O F N U C L I D E S I N S A M P L E *****

Nuclide		Time of Count Activity pCi/g	Uncertainty Counting pCi/g	2 Sigma Total pCi/g	MDA pCi/g
Ac-228	F	6.0508E-01	1.9802E-01	2.0153E-01	0.144E+00
AM-241		1.3692E-01	1.2980E-01	1.3029E-01	0.853E-01
Bi-212	#F	6.2779E-01	2.7399E-01	2.7670E-01	0.353E+00
BI-214		8.3332E-01	1.6641E-01	1.7394E-01	0.630E-01
CO-60	#B	1.3150E-02	2.2114E-02	2.2129E-02	0.137E-01
CS-137		8.2339E-02	5.2618E-02	5.2858E-02	0.259E-01
EU-152	F	2.8047E-01	1.3910E-01	1.4050E-01	0.785E-01
EU-154	F	7.6169E-02	5.4768E-02	5.5031E-02	0.488E-01
K-40		1.5676E+01	1.6268E+00	1.8965E+00	0.264E+00
Pa-234	F	1.2260E-01	1.1383E-01	1.1422E-01	0.689E-01
Pb-210	#B	-3.0931E-01	1.4274E+00	1.4276E+00	0.829E+00
Pb-212		7.1315E-01	1.0687E-01	1.1642E-01	0.647E-01
PB-214	F	7.0744E-01	1.5100E-01	1.5746E-01	0.672E-01
RA-226		1.3974E+00	9.8621E-01	9.9033E-01	0.768E+00
Th-230	B	4.8229E+00	8.3841E+00	8.4088E+00	0.672E+01
Th-234	F	1.1913E+00	9.1340E-01	9.2226E-01	0.715E+00
Tl-208	F	3.8582E-01	1.1943E-01	1.2911E-01	0.476E-01
U-235	B	4.1852E-03	5.2884E-02	5.2885E-02	0.477E-01

- All peaks for activity calculation had bad shape.
* - Activity omitted from total
& - Activity omitted from total and all peaks had bad shape.
< - MDA value printed.
A - Activity printed, but activity < MDA.
B - Activity < MDA and failed test.
C - Area < Critical level.
F - Failed fraction or key line test.
H - Halflife limit exceeded

---------- S U M M A R Y ----------

Total Activity (41.6 to 2659.6 keV) 2.054E+01 pCi/g

Laboratory: New World Technology

ORTEC g v - i (3263) Npp32 G53W3.12 5/28/2009 9:04:37 AM
New World Technology Spectrum name: 6N000658.An1

Sample description
Parcel G 70-PGT-119-111 383g
5/27/09 11:40

Acquisition information
Start time: 5/28/2009 8:13:09 AM
Live time: 2700
Real time: 2705

- -

***** S U M M A R Y O F N U C L I D E S I N S A M P L E *****

Nuclide		Time of Count Activity pCi/g	Uncertainty Counting pCi/g	2 Sigma Total pCi/g	MDA pCi/g
Ac-228	F	3.9427E-01	2.1717E-01	2.1854E-01	0.137E+00
AM-241	#	1.4231E-01	1.0878E-01	1.0942E-01	0.725E-01
Bi-212	F	3.8889E-01	2.5214E-01	2.5327E-01	0.154E+00
BI-214		5.9579E-01	1.5908E-01	1.6314E-01	0.673E-01
CO-60	#B	6.5928E-03	1.6196E-02	1.6201E-02	0.115E-01
CS-137	F	2.8354E-02	3.5152E-02	3.5194E-02	0.255E-01
EU-152	B	6.8921E-02	7.4850E-02	7.5008E-02	0.812E-01
EU-154	F	7.4597E-02	6.7799E-02	6.8002E-02	0.524E-01
K-40	#	8.6957E+00	1.2341E+00	1.3473E+00	0.246E+00
Pa-234	#F	1.2990E-01	6.9872E-02	7.0570E-02	0.610E-01
Pb-210	#B	-9.4732E-01	2.7303E+00	2.7312E+00	0.782E+00
Pb-212	F	3.5995E-01	8.5897E-02	8.9004E-02	0.583E-01
PB-214	F	3.4789E-01	9.3785E-02	9.6318E-02	0.493E-01
RA-226	B	5.1970E-01	9.5308E-01	9.5367E-01	0.777E+00
Th-230	B	7.1019E-01	6.5814E+00	6.5820E+00	0.539E+01
Th-234	B	2.3762E-01	8.0527E-01	8.0567E-01	0.708E+00
Tl-208	F	1.2184E-01	3.4784E-02	3.8078E-02	0.264E-01
U-235	F	9.6873E-02	5.4627E-02	5.4984E-02	0.389E-01

- All peaks for activity calculation had bad shape.
* - Activity omitted from total
& - Activity omitted from total and all peaks had bad shape.
< - MDA value printed.
A - Activity printed, but activity < MDA.
B - Activity < MDA and failed test.
C - Area < Critical level.
F - Failed fraction or key line test.
H - Halflife limit exceeded

---------- S U M M A R Y ----------

Total Activity (41.6 to 2659.6 keV) 1.115E+01 pCi/g

Laboratory: New World Technology

ORTEC g v - i (3263) Npp32 G53W3.10 28-MAY-2009 02:13:49
New World Technology Spectrum name: 5N000523.An1

Sample description
Parcel G 70-PGT-119-112 384g
5/27/09 11:45

Acquisition information
Start time: 28-May-2009 01:27:48
Live time: 2700
Real time: 2702

- -

***** S U M M A R Y O F N U C L I D E S I N S A M P L E *****

Nuclide		Time of Count Activity pCi/g	Uncertainty Counting pCi/g	2 Sigma Total pCi/g	MDA pCi/g
Ac-228	F	1.2517E+00	2.8880E-01	2.9902E-01	0.910E-01
AM-241		1.6086E-01	1.4654E-01	1.4714E-01	0.917E-01
Bi-212	F	6.4544E-01	3.5701E-01	3.5921E-01	0.248E+00
BI-214	F	8.6953E-01	1.5420E-01	1.6299E-01	0.623E-01
CO-60	#B	-2.0566E-02	1.3546E-01	1.3547E-01	0.276E-01
CS-137		5.2406E-02	3.5800E-02	3.5943E-02	0.217E-01
EU-152	B	2.5580E-02	3.5764E-02	3.5809E-02	0.965E-01
EU-154	F	1.5536E-01	7.6807E-02	7.7584E-02	0.536E-01
K-40		7.6407E+00	1.1801E+00	1.2722E+00	0.345E+00
Pa-234	#F	1.6971E-01	9.7193E-02	9.8049E-02	0.556E-01
Pb-210	#B	-7.0996E-02	1.7665E+00	1.7665E+00	0.115E+01
Pb-212		7.4316E-01	1.1231E-01	1.2218E-01	0.677E-01
Pb-214		6.4932E-01	1.5698E-01	1.6224E-01	0.688E-01
RA-226		1.1361E+00	1.0721E+00	1.0746E+00	0.850E+00
Th-230	#F	9.6511E+00	1.2407E+01	1.2473E+01	0.785E+01
Th-234	F	1.2950E+00	1.1232E+00	1.1317E+00	0.785E+00
Tl-208	F	2.7450E-01	7.3105E-02	7.4973E-02	0.446E-01
U-235	F	9.8327E-02	8.5462E-02	8.5698E-02	0.497E-01

- All peaks for activity calculation had bad shape.
* - Activity omitted from total
& - Activity omitted from total and all peaks had bad shape.
< - MDA value printed.
A - Activity printed, but activity < MDA.
B - Activity < MDA and failed test.
C - Area < Critical level.
F - Failed fraction or key line test.
H - Halflife limit exceeded

---------- S U M M A R Y ----------

Total Activity (38.2 to 2445.7 keV) 1.482E+01 pCi/g

Laboratory: New World Technology

ORTEC g v - i (3263) Npp32 G53W3.12 5/28/2009 8:09:52 AM
New World Technology Spectrum name: 6N000657.An1

Sample description
Parcel G 70-PGT-119-113 381g
5/27/09 11:49

Acquisition information
Start time: 5/28/2009 7:02:33 AM
Live time: 2700
Real time: 2705

- -

***** S U M M A R Y O F N U C L I D E S I N S A M P L E *****

Nuclide		Time of Count Activity pCi/g	Uncertainty Counting pCi/g	2 Sigma Total pCi/g	MDA pCi/g
Ac-228	#F	2.6310E-01	1.6773E-01	1.6852E-01	0.144E+00
AM-241	#A	1.4764E-02	6.5792E-02	6.5803E-02	0.534E-01
Bi-212	#	6.8611E-01	3.6807E-01	3.7048E-01	0.208E+00
BI-214		2.0604E-01	8.8431E-02	8.9311E-02	0.437E-01
CO-60	#B	-1.9573E-03	1.9230E-02	1.9230E-02	0.800E-02
CS-137		5.5092E-02	3.5091E-02	3.5252E-02	0.215E-01
EU-152	#B	3.8068E-02	2.8777E-02	2.8902E-02	0.556E-01
EU-154	#F	6.1478E-02	4.0491E-02	4.0722E-02	0.282E-01
K-40		6.2915E+00	9.9587E-01	1.0700E+00	0.148E+00
Pa-234	F	1.5752E-01	1.3834E-01	1.3886E-01	0.923E-01
Pb-210	#B	-9.3129E-01	2.7118E+00	2.7128E+00	0.777E+00
Pb-212	F	1.8038E-01	7.4547E-02	7.5456E-02	0.565E-01
PB-214	F	2.6666E-01	1.1762E-01	1.1882E-01	0.582E-01
RA-226	F	8.1268E-01	8.5801E-01	8.5961E-01	0.684E+00
Th-230	B	4.5621E+00	7.4318E+00	7.4567E+00	0.592E+01
Th-234	#B	3.6305E-01	3.7410E-01	3.7611E-01	0.648E+00
Tl-208	#F	5.7392E-02	3.0122E-02	3.0993E-02	0.210E-01
U-235	F	5.4286E-02	6.4222E-02	6.4318E-02	0.450E-01

- All peaks for activity calculation had bad shape.
* - Activity omitted from total
& - Activity omitted from total and all peaks had bad shape.
< - MDA value printed.
A - Activity printed, but activity < MDA.
B - Activity < MDA and failed test.
C - Area < Critical level.
F - Failed fraction or key line test.
H - Halflife limit exceeded

---------- S U M M A R Y ----------

Total Activity (41.6 to 2659.6 keV) 7.949E+00 pCi/g

Laboratory: New World Technology

ORTEC g v - i (3263) Npp32 G53W3.10 28-MAY-2009 09:18:28
New World Technology Spectrum name: 2N000590.An1

Sample description
Parcel G 70-PGT-119-114 385g
5/27/09 11:50

Acquisition information
Start time: 28-May-2009 08:26:50
Live time: 2700
Real time: 2703

- -

***** S U M M A R Y O F N U C L I D E S I N S A M P L E *****

Nuclide		Time of Count Activity pCi/g	Uncertainty Counting pCi/g	2 Sigma Total pCi/g	MDA pCi/g
Ac-228	F	5.7237E-01	1.9685E-01	2.0002E-01	0.136E+00
AM-241	#B	7.9020E-02	1.3861E-01	1.3876E-01	0.920E-01
Bi-212	B	1.8874E-01	2.6692E-01	2.6717E-01	0.326E+00
BI-214	F	4.5230E-01	1.5722E-01	1.5960E-01	0.973E-01
CO-60	#F	6.8735E-02	4.8101E-02	4.8285E-02	0.192E-01
CS-137	#F	6.7337E-02	7.9442E-02	7.9548E-02	0.547E-01
EU-152	#F	1.1276E-01	1.0225E-01	1.0256E-01	0.778E-01
EU-154	F	1.8555E-01	1.0472E-01	1.0553E-01	0.656E-01
K-40		1.2555E+01	1.5184E+00	1.7074E+00	0.107E+00
Pa-234	#F	2.1132E-01	1.5841E-01	1.5923E-01	0.102E+00
Pb-210		1.6559E+00	1.2078E+00	1.2144E+00	0.784E+00
Pb-212	F	4.3105E-01	1.0885E-01	1.1237E-01	0.750E-01
PB-214	F	6.4685E-01	2.1016E-01	2.1409E-01	0.800E-01
RA-226	B	3.0014E-01	1.1748E+00	1.1750E+00	0.985E+00
Th-230	B	8.3351E-01	9.4067E+00	9.4074E+00	0.792E+01
Th-234	F	1.1189E+00	6.8926E-01	6.9958E-01	0.747E+00
Tl-208	F	1.7269E-01	8.6724E-02	8.7353E-02	0.524E-01
U-235	F	9.2311E-02	9.1604E-02	9.1798E-02	0.500E-01

- All peaks for activity calculation had bad shape.
* - Activity omitted from total
& - Activity omitted from total and all peaks had bad shape.
< - MDA value printed.
A - Activity printed, but activity < MDA.
B - Activity < MDA and failed test.
C - Area < Critical level.
F - Failed fraction or key line test.
H - Halflife limit exceeded

---------- S U M M A R Y ----------

Total Activity (40.6 to 2592.1 keV) 1.683E+01 pCi/g

Laboratory: New World Technology

ORTEC g v - i (3263) Npp32 G53W3.10 28-MAY-2009 09:29:35
New World Technology Spectrum name: 4N000507.An1

Sample description
Parcel G 70-PGT-119-115 402g
5/27/09 12:40

Acquisition information
Start time: 28-May-2009 08:20:01
Live time: 2700
Real time: 2704

- -

***** S U M M A R Y O F N U C L I D E S I N S A M P L E *****

Nuclide		Time of Count Activity pCi/g	Uncertainty Counting pCi/g	2 Sigma Total pCi/g	MDA pCi/g
Ac-228	F	1.0573E+00	2.5848E-01	2.6665E-01	0.818E-01
AM-241	#B	1.0877E-01	4.5672E-01	4.5681E-01	0.345E+00
Bi-212	#B	-7.9939E-02	9.5747E-02	9.5873E-02	0.348E+00
BI-214	F	6.0468E-01	1.3302E-01	1.3799E-01	0.695E-01
CO-60	B	6.3233E-03	1.0433E-02	1.0441E-02	0.409E-01
CS-137		4.4646E-02	3.1689E-02	3.1806E-02	0.192E-01
EU-152	B	7.8576E-02	6.5949E-02	6.6182E-02	0.125E+00
EU-154	B	5.1532E-02	8.1226E-02	8.1307E-02	0.722E-01
K-40		1.9047E+01	1.7430E+00	2.1074E+00	0.396E+00
Pa-234	#F	1.8544E-01	7.7695E-02	7.8970E-02	0.183E+00
Pb-210	#F	0.0000E+00	2.1331E+00	2.1331E+00	0.000E+00
Pb-212	F	4.3068E-01	1.0006E-01	1.0387E-01	0.694E-01
Pb-214	F	5.0264E-01	1.3678E-01	1.4040E-01	0.681E-01
RA-226	#B	-1.0521E-01	1.7878E+00	1.7878E+00	0.846E+00
Th-230	#B	-5.5147E+00	3.8765E+01	3.8772E+01	0.193E+02
Th-234	#B	-6.8850E+00	3.1123E+01	3.1132E+01	0.226E+01
Tl-208	F	2.6261E-01	9.3138E-02	9.4487E-02	0.477E-01
U-235	F	5.7840E-02	5.9555E-02	5.9672E-02	0.454E-01

- All peaks for activity calculation had bad shape.
* - Activity omitted from total
& - Activity omitted from total and all peaks had bad shape.
< - MDA value printed.
A - Activity printed, but activity < MDA.
B - Activity < MDA and failed test.
C - Area < Critical level.
F - Failed fraction or key line test.
H - Halflife limit exceeded

---------- S U M M A R Y ----------

Total Activity (40.4 to 2576.4 keV) 2.195E+01 pCi/g

Laboratory: New World Technology

ORTEC g v - i (3263) Npp32 G53W3.10 28-MAY-2009 10:11:48
New World Technology Spectrum name: 3N000839.An1

Sample description
Parcel G 70-PGT-119-116 357g
5/27/09 12:45

Acquisition information
Start time: 28-May-2009 09:25:32
Live time: 2700
Real time: 2702

- -

***** S U M M A R Y O F N U C L I D E S I N S A M P L E *****

Nuclide		Time of Count Activity pCi/g	Uncertainty Counting pCi/g	2 Sigma Total pCi/g	MDA pCi/g
Ac-228	F	3.0623E-01	1.4934E-01	1.5054E-01	0.567E-01
AM-241	B	1.5428E-02	8.8714E-02	8.8723E-02	0.740E-01
Bi-212	B	1.0350E-01	2.4588E-01	2.4597E-01	0.205E+00
BI-214	F	1.6158E-01	1.5801E-01	1.5832E-01	0.836E-01
CO-60	#B	8.3087E-03	1.6018E-02	1.6026E-02	0.198E-01
CS-137	B	6.5110E-03	3.6010E-02	3.6012E-02	0.293E-01
EU-152	#B	4.9639E-02	4.0530E-02	4.0681E-02	0.876E-01
EU-154	F	1.2603E-01	6.5081E-02	6.5685E-02	0.492E-01
K-40	#	3.7692E+00	8.5384E-01	8.8543E-01	0.113E+00
Pa-234	#F	1.2335E-01	9.2871E-02	9.3345E-02	0.872E-01
Pb-210	#F	8.4165E-01	9.5848E-01	9.6063E-01	0.673E+00
Pb-212	F	1.3407E-01	7.7743E-02	7.8227E-02	0.697E-01
PB-214	F	1.3563E-01	1.0802E-01	1.0835E-01	0.857E-01
RA-226	B	2.0233E-01	9.2084E-01	9.2093E-01	0.771E+00
Th-230	#B	-1.1435E+01	8.7334E+01	8.7347E+01	0.636E+01
Th-234	B	1.5812E-01	7.1302E-01	7.1323E-01	0.607E+00
Tl-208	#F	8.3910E-02	4.4677E-02	4.4965E-02	0.206E-01
U-235	F	7.4024E-02	7.0205E-02	7.0368E-02	0.397E-01

- All peaks for activity calculation had bad shape.
* - Activity omitted from total
& - Activity omitted from total and all peaks had bad shape.
< - MDA value printed.
A - Activity printed, but activity < MDA.
B - Activity < MDA and failed test.
C - Area < Critical level.
F - Failed fraction or key line test.
H - Halflife limit exceeded

---------- S U M M A R Y ----------

Total Activity (39.2 to 2494.9 keV) 4.293E+00 pCi/g

Laboratory: New World Technology

ORTEC g v - i (3263) Npp32 G53W3.10 28-MAY-2009 10:12:05
New World Technology Spectrum name: 2N000591.An1

Sample description
Parcel G 70-PGT-119-117 389g
5/27/09 13:00

Acquisition information
Start time: 28-May-2009 09:20:38
Live time: 2700
Real time: 2703

- -

***** S U M M A R Y O F N U C L I D E S I N S A M P L E *****

Nuclide		Time of Count Activity pCi/g	Uncertainty 2 Sigma Counting pCi/g	Total pCi/g	MDA pCi/g
Ac-228	F	1.1574E+00	2.4116E-01	2.5159E-01	0.123E+00
AM-241	#B	6.3657E-02	1.3618E-01	1.3628E-01	0.955E-01
Bi-212	#B	-2.2529E-02	1.8395E-02	1.8447E-02	0.383E+00
BI-214	F	9.7852E-01	1.6677E-01	1.7704E-01	0.661E-01
CO-60	#F	1.1443E-02	1.4520E-02	1.4537E-02	0.977E-02
CS-137	#B	-5.5479E-02	1.6496E-01	1.6500E-01	0.584E-01
EU-152	F	1.9297E-01	1.0890E-01	1.0975E-01	0.111E+00
EU-154	F	1.6031E-01	1.4043E-01	1.4088E-01	0.741E-01
K-40		7.7954E+00	1.3588E+00	1.4427E+00	0.542E+00
Pa-234	F	1.9596E-01	1.3110E-01	1.3195E-01	0.431E-01
Pb-210		1.1591E+00	9.9682E-01	1.0007E+00	0.792E+00
Pb-212	F	9.6432E-01	1.4122E-01	1.5441E-01	0.826E-01
PB-214		8.8725E-01	1.6076E-01	1.7022E-01	0.812E-01
RA-226	B	1.0400E+00	1.4341E+00	1.4356E+00	0.117E+01
Th-230	B	7.1916E+00	1.2659E+01	1.2695E+01	0.872E+01
Th-234		3.3435E+00	1.1261E+00	1.1816E+00	0.882E+00
Tl-208	F	3.0289E-01	7.9945E-02	8.2024E-02	0.529E-01
U-235	F	1.2498E-01	8.3580E-02	8.3969E-02	0.639E-01

- All peaks for activity calculation had bad shape.
* - Activity omitted from total
& - Activity omitted from total and all peaks had bad shape.
< - MDA value printed.
A - Activity printed, but activity < MDA.
B - Activity < MDA and failed test.
C - Area < Critical level.
F - Failed fraction or key line test.
H - Halflife limit exceeded

---------- S U M M A R Y ----------

Total Activity (40.6 to 2592.1 keV) 1.671E+01 pCi/g

Laboratory: New World Technology

ORTEC g v - i (3263) Npp32 G53W3.12 5/28/2009 9:58:32 AM
New World Technology Spectrum name: 6N000659.An1

Sample description
Parcel G 70-PGT-119-118 338g
5/27/09 13:45

Acquisition information
Start time: 5/28/2009 9:13:21 AM
Live time: 2700
Real time: 2705

- -

***** S U M M A R Y O F N U C L I D E S I N S A M P L E *****

Nuclide		Time of Count Activity pCi/g	Uncertainty Counting pCi/g	2 Sigma Total pCi/g	MDA pCi/g
Ac-228	#B	1.3918E-01	8.0913E-02	8.1371E-02	0.204E+00
AM-241	#A	4.1032E-02	8.7965E-02	8.8031E-02	0.687E-01
Bi-212	F	4.1300E-01	3.1925E-01	3.2026E-01	0.286E+00
BI-214		4.2205E-01	1.1930E-01	1.2203E-01	0.659E-01
CO-60	#B	1.2890E-02	4.2147E-02	4.2154E-02	0.266E-01
CS-137		4.2414E-02	3.9167E-02	3.9253E-02	0.268E-01
EU-152	F	1.1123E-01	7.8649E-02	7.9040E-02	0.738E-01
EU-154	F	9.2769E-02	9.7915E-02	9.8133E-02	0.660E-01
K-40		9.3728E+00	1.3680E+00	1.4870E+00	0.279E+00
Pa-234	F	1.1953E-01	1.1807E-01	1.1842E-01	0.100E+00
Pb-210	#B	4.3148E-01	1.4164E+00	1.4167E+00	0.997E+00
Pb-212	F	2.7506E-01	9.0506E-02	9.2242E-02	0.659E-01
PB-214	F	4.3937E-01	1.7864E-01	1.8078E-01	0.834E-01
RA-226	F	1.0414E+00	1.0794E+00	1.0815E+00	0.861E+00
Th-230	#B	-5.9731E-02	1.8854E+01	1.8854E+01	0.515E+00
Th-234	F	8.9081E-01	1.3436E+00	1.3470E+00	0.878E+00
Tl-208	F	3.1037E-01	1.0231E-01	1.0966E-01	0.193E-01
U-235	F	1.0737E-01	9.3053E-02	9.3312E-02	0.524E-01

- All peaks for activity calculation had bad shape.
* - Activity omitted from total
& - Activity omitted from total and all peaks had bad shape.
< - MDA value printed.
A - Activity printed, but activity < MDA.
B - Activity < MDA and failed test.
C - Area < Critical level.
F - Failed fraction or key line test.
H - Halflife limit exceeded

---------- S U M M A R Y ----------

Total Activity (41.6 to 2659.6 keV) 1.086E+01 pCi/g

Laboratory: New World Technology

ORTEC g v - i (3263) Npp32 G53W3.10 28-MAY-2009 10:28:31
New World Technology Spectrum name: 5N000524.An1

Sample description
Parcel G 70-PGT-119-119 343g
5/27/09 13:40

Acquisition information
Start time: 28-May-2009 09:36:45
Live time: 2700
Real time: 2702

- -

***** S U M M A R Y O F N U C L I D E S I N S A M P L E *****

Nuclide		Time of Count Activity pCi/g	Uncertainty Counting pCi/g	2 Sigma Total pCi/g	MDA pCi/g
Ac-228	F	8.0489E-01	2.3265E-01	2.3793E-01	0.810E-01
AM-241	#B	8.7602E-02	1.4817E-01	1.4835E-01	0.949E-01
Bi-212	#B	1.5507E-01	3.1673E-01	3.1687E-01	0.267E+00
BI-214	F	4.5814E-01	1.5483E-01	1.5731E-01	0.618E-01
CO-60	#B	-3.3014E-02	3.9981E-01	3.9981E-01	0.297E-01
CS-137		5.5010E-02	4.0659E-02	4.0797E-02	0.255E-01
EU-152	#F	1.2239E-01	6.2728E-02	6.3320E-02	0.103E+00
EU-154	B	6.4156E-03	8.7329E-03	8.7446E-03	0.786E-01
K-40		1.1675E+01	1.6084E+00	1.7647E+00	0.456E+00
Pa-234	#B	2.7800E-02	4.1373E-02	4.1427E-02	0.115E+00
Pb-210	#B	-3.1165E-01	1.4724E+00	1.4726E+00	0.959E+00
Pb-212		3.0321E-01	9.9836E-02	1.0175E-01	0.744E-01
Pb-214	F	4.6196E-01	1.4224E-01	1.4520E-01	0.642E-01
RA-226	B	2.0778E-01	1.1860E+00	1.1861E+00	0.986E+00
Th-230	#B	3.3143E+00	6.8469E+00	6.8612E+00	0.531E+01
Th-234	#B	3.4652E-01	1.0401E+00	1.0407E+00	0.794E+00
Tl-208	F	1.3352E-01	5.1640E-02	5.2270E-02	0.330E-01
U-235	F	1.1990E-01	6.7555E-02	6.7998E-02	0.499E-01

- All peaks for activity calculation had bad shape.
* - Activity omitted from total
& - Activity omitted from total and all peaks had bad shape.
< - MDA value printed.
A - Activity printed, but activity < MDA.
B - Activity < MDA and failed test.
C - Area < Critical level.
F - Failed fraction or key line test.
H - Halflife limit exceeded

---------- S U M M A R Y ----------

Total Activity (38.2 to 2445.7 keV) 1.401E+01 pCi/g

Laboratory: New World Technology

ORTEC g v - i (3263) Npp32 G53W3.12 5/28/2009 10:49:18 AM
New World Technology Spectrum name: 6N000660.An1

Sample description
Parcel G 70-PGT-119-120 379g
5/27/09 13:30

Acquisition information
Start time: 5/28/2009 10:04:06 AM
Live time: 2700
Real time: 2705

- -

***** S U M M A R Y O F N U C L I D E S I N S A M P L E *****

Nuclide		Time of Count Activity pCi/g	Uncertainty Counting pCi/g	2 Sigma Total pCi/g	MDA pCi/g
Ac-228	#B	7.5191E-02	6.8102E-02	6.8261E-02	0.139E+00
AM-241	#A	4.0944E-02	8.4770E-02	8.4838E-02	0.634E-01
Bi-212	#B	-8.5401E-03	8.1591E-01	8.1591E-01	0.205E+00
BI-214	#	2.5502E-01	1.1501E-01	1.1605E-01	0.479E-01
CO-60	#F	2.5971E-02	1.6355E-02	1.6432E-02	0.104E-01
CS-137		6.3550E-02	3.4825E-02	3.5040E-02	0.198E-01
EU-152	F	1.1751E-01	7.0860E-02	7.1344E-02	0.700E-01
EU-154	F	6.1243E-02	5.8191E-02	5.8351E-02	0.432E-01
K-40	#	3.6592E+00	8.9333E-01	9.2186E-01	0.289E+00
Pa-234	B	4.4909E-02	4.5511E-02	4.5639E-02	0.610E-01
Pb-210	#B	-8.9632E-01	2.4131E+00	2.4141E+00	0.754E+00
Pb-212	B	1.5730E-02	2.9263E-02	2.9280E-02	0.562E-01
PB-214	F	1.6928E-01	9.9710E-02	1.0028E-01	0.583E-01
RA-226	F	7.0552E-01	8.2602E-01	8.2728E-01	0.662E+00
Th-230	#F	8.8250E+00	9.3460E+00	9.4200E+00	0.603E+01
Th-234	B	2.9919E-01	5.8304E-01	5.8392E-01	0.709E+00
Tl-208	F	8.0507E-02	3.6459E-02	3.7869E-02	0.172E-01
U-235	F	6.2064E-02	6.3157E-02	6.3285E-02	0.420E-01

- All peaks for activity calculation had bad shape.
* - Activity omitted from total
& - Activity omitted from total and all peaks had bad shape.
< - MDA value printed.
A - Activity printed, but activity < MDA.
B - Activity < MDA and failed test.
C - Area < Critical level.
F - Failed fraction or key line test.
H - Halflife limit exceeded

---------- S U M M A R Y ----------

Total Activity (41.6 to 2659.6 keV) 4.228E+00 pCi/g

Laboratory: New World Technology

ORTEC g v - i (3263) Npp32 G53W3.10 28-MAY-2009 17:53:03
New World Technology Spectrum name: 5N000525.An1

Sample description
Parcel G 70-PGT-119-121 395g
5/27/09 13:28

Acquisition information
Start time: 28-May-2009 15:05:12
Live time: 5400
Real time: 5404

- -

***** S U M M A R Y O F N U C L I D E S I N S A M P L E *****

Nuclide		Time of Count Activity pCi/g	Uncertainty Counting pCi/g	2 Sigma Total pCi/g	MDA pCi/g
Ac-228		1.4134E+00	1.9573E-01	2.1441E-01	0.596E-01
AM-241	B	5.2843E-02	1.0060E-01	1.0070E-01	0.824E-01
Bi-212	F	8.0399E-01	2.8649E-01	2.9072E-01	0.197E+00
BI-214	F	9.5968E-01	1.3139E-01	1.4373E-01	0.487E-01
CO-60	#B	2.1112E-02	2.1926E-02	2.1964E-02	0.263E-01
CS-137		3.8203E-02	3.3733E-02	3.3814E-02	0.251E-01
EU-152	F	6.8581E-02	7.4134E-02	7.4292E-02	0.619E-01
EU-154	F	5.4466E-02	6.1005E-02	6.1126E-02	0.525E-01
K-40		1.1566E+01	1.0665E+00	1.2864E+00	0.289E+00
Pa-234	F	8.1204E-02	9.2879E-02	9.3085E-02	0.648E-01
Pb-210	F	9.2236E-01	9.8453E-01	9.8703E-01	0.685E+00
Pb-212		1.1047E+00	8.9779E-02	1.1479E-01	0.491E-01
Pb-214		8.0929E-01	1.0904E-01	1.2040E-01	0.650E-01
RA-226		8.2545E-01	7.4821E-01	7.5011E-01	0.603E+00
Th-230	#F	1.0981E+01	8.2876E+00	8.4163E+00	0.547E+01
Th-234	B	3.3731E-01	3.7508E-01	3.7681E-01	0.704E+00
Tl-208	F	4.3679E-01	6.7523E-02	7.2524E-02	0.291E-01
U-235	F	1.1890E-01	5.0268E-02	5.0852E-02	0.380E-01

- All peaks for activity calculation had bad shape.
* - Activity omitted from total
& - Activity omitted from total and all peaks had bad shape.
< - MDA value printed.
A - Activity printed, but activity < MDA.
B - Activity < MDA and failed test.
C - Area < Critical level.
F - Failed fraction or key line test.
H - Halflife limit exceeded

---------- S U M M A R Y ----------

Total Activity (38.2 to 2445.7 keV) 2.906E+01 pCi/g

Laboratory: New World Technology

ORTEC g v - i (3263) Npp32 G53W3.10 28-MAY-2009 10:52:06
New World Technology Spectrum name: 1N000822.An1

Sample description
Parcel G 70-PGT-119-122 333g
5/27/09 13:25

Acquisition information
Start time: 28-May-2009 09:56:13
Live time: 2700
Real time: 2701

- -

***** S U M M A R Y O F N U C L I D E S I N S A M P L E *****

Nuclide		Time of Count Activity pCi/g	Uncertainty Counting pCi/g	2 Sigma Total pCi/g	MDA pCi/g
Ac-228	F	1.4362E-01	7.6216E-02	7.6735E-02	0.131E+00
AM-241	#A	-1.0594E-02	1.3909E-01	1.3909E-01	0.297E-01
Bi-212	B	1.9797E-01	2.7440E-01	2.7467E-01	0.270E+00
BI-214	#F	1.7021E-01	6.9864E-02	7.0627E-02	0.400E-01
CO-60	#B	3.5559E-03	1.1760E-02	1.1762E-02	0.142E-01
CS-137	B	7.5982E-03	2.5177E-02	2.5181E-02	0.193E-01
EU-152	C	5.0318E-02	6.5372E-02	6.5467E-02	0.487E-01
EU-154	#A	4.3570E-03	6.1618E-03	6.1693E-03	0.423E-01
K-40	#	2.7054E+00	7.0766E-01	7.2739E-01	0.107E+00
Pa-234	#F	7.1015E-02	8.8981E-02	8.9144E-02	0.361E-01
Pb-210	F	6.4137E-01	7.5324E-01	7.5484E-01	0.572E+00
Pb-212	F	1.3665E-01	5.9201E-02	5.9858E-02	0.537E-01
Pb-214	F	8.8247E-02	8.7327E-02	8.7505E-02	0.509E-01
RA-226	B	2.2338E-01	8.4634E-01	8.4646E-01	0.711E+00
Th-230	#B	-6.4284E+00	2.3885E+01	2.3901E+01	0.463E+01
Th-234	#B	-6.3583E-01	1.3796E+00	1.3812E+00	0.712E+00
Tl-208	#F	5.5568E-02	3.2345E-02	3.2520E-02	0.226E-01
U-235	B	7.1507E-02	3.3876E-02	3.4221E-02	0.178E+00

- All peaks for activity calculation had bad shape.
* - Activity omitted from total
& - Activity omitted from total and all peaks had bad shape.
< - MDA value printed.
A - Activity printed, but activity < MDA.
B - Activity < MDA and failed test.
C - Area < Critical level.
F - Failed fraction or key line test.
H - Halflife limit exceeded

---------- S U M M A R Y ----------

Total Activity (39.3 to 2490.8 keV) 3.100E+00 pCi/g

Laboratory: New World Technology

Tetra Tech EC, Inc.

Client Sample ID: 70-PGT-119-112

Radiochemistry

Lab Sample ID:	F9G150348-007	Date Collected:	05/27/09 1145
Work Order:	LGJ0A	Date Received:	07/15/09 0930
Matrix:	SOLID		

Parameter	Result	Qual	Total Uncert. (2 σ+/-)	RL	MDL	Count Time	Prep Date	Analysis Date
Strontium-90 by GFPC DOE SR-03-RC MOD				**pCi/g**		**Batch # 9196498**		**Yld % 67**
Strontium 90	-0.02	U	0.25	0.33	0.27	200	07/15/09	07/31/09

NOTE(S)

Data are incomplete without the case narrative.
Bold results are greater than the MDL.

U Result is less than the sample detection limit.

The MDL is an estimate of the measured concentration at which there is a 99% confidence that a given analyte is given sample matrix. This is functionally analogous to the "critical value" or the "limit of detection".

Ra-226 results analyzed by EPA 901.1 MOD were calculated and reported from the 46.09 percent abundant 609.31 KeV line of Bi-214.

Tetra Tech EC, Inc.

Client Sample ID: 70-PGT-119-121

Radiochemistry

Lab Sample ID: F9G150348-008
Work Order: LGJ0C
Matrix: SOLID

Date Collected: 05/27/09 1328
Date Received: 07/15/09 0930

Parameter	Result	Qual	Total Uncert. (2 σ+/-)	RL	MDL	Count Time	Prep Date	Analysis Date
Strontium-90 by GFPC DOE SR-03-RC MOD				**pCi/g**		**Batch # 9196498**		**Yld % 83**
Strontium 90	-0.19	U	0.15	0.33	0.18	200	07/15/09	07/31/09

NOTE(S)

Data are incomplete without the case narrative.
Bold results are greater than the MDL.

U Result is less than the sample detection limit.

The MDL is an estimate of the measured concentration at which there is a 99% confidence that a given analyte is given sample matrix. This is functionally analogous to the "critical value" or the "limit of detection".

Ra-226 results analyzed by EPA 901.1 MOD were calculated and reported from the 46.09 percent abundant 609.31 KeV line of Bi-214.

ATTACHMENT 3

QUALITY ASSURANCE SAMPLE RESULTS
(on CD only)

This page intentionally left blank.

Tetra Tech EC, Inc.

Client Sample ID: 70-PDT-119-01

Radiochemistry

Lab Sample ID: F9C060154-001
Work Order: K75PR
Matrix: SOLID

Date Collected: 01/21/09 1300
Date Received: 03/06/09 0910

Parameter	Result	Qual	Total Uncert. (2 σ+/-)	RL	MDL	Count Time	Prep Date	Analysis Date
Gamma Ra-226 & hits by EPA 901.1 MOD				pCi/g		Batch # 9068191		Yld %
Actinium 228	1.89		0.24		0.08	90	03/09/09	04/07/09
Americium 241	0.04	U	0.12		0.1	90	03/09/09	04/07/09
Bismuth 212	1.29		0.45		0.18	90	03/09/09	04/07/09
Bismuth 214	1.18		0.21		0.07	90	03/09/09	04/07/09
Cesium 137	-0.024	U	0.050	0.070	0.040	90	03/09/09	04/07/09
Cobalt 60	-0.012	U	0.053		0.043	90	03/09/09	04/07/09
Europium 152	-0.03	U	0.11		0.09	90	03/09/09	04/07/09
Europium 154	0.10	U	0.28		0.22	90	03/09/09	04/07/09
Lead 210	1.8		1.1	1.5	0.7	90	03/09/09	04/07/09
Lead 212	1.92		0.18		0.07	90	03/09/09	04/07/09
Lead 214	1.14		0.16		0.06	90	03/09/09	04/07/09
Potassium 40	10.0		1.3		0.3	90	03/09/09	04/07/09
Protactinium 234	0.003	U	0.13		0.11	90	03/09/09	04/07/09
Radium (226)	1.18		0.21	0.70	0.07	90	03/09/09	04/07/09
Thallium 208	0.548		0.079		0.023	90	03/09/09	04/07/09
Thorium 232	1.89		0.24		0.08	90	03/09/09	04/07/09
Thorium 234	2.9		1.5		0.9	90	03/09/09	04/07/09
Uranium 235	0.17	U	0.25		0.21	90	03/09/09	04/07/09

NOTE(S)

Data are incomplete without the case narrative.
Bold results are greater than the MDL.

U Result is less than the sample detection limit.

The MDL is an estimate of the measured concentration at which there is a 99% confidence that a given analyte is given sample matrix. This is functionally analogous to the "critical value" or the "limit of detection".

Ra-226 results analyzed by EPA 901.1 MOD were calculated and reported from the 46.09 percent abundant 609.31 KeV line of Bi-214.

Tetra Tech EC, Inc.

Client Sample ID: 70-PDT-119-01 DUP

Radiochemistry

Lab Sample ID: F9C060154-001X
Work Order: K75PR
Matrix: SOLID

Date Collected: 01/21/09 1300
Date Received: 03/06/09 0910

Parameter	Result	Qual	Total Uncert. (2 σ+/-)	RL	MDL	Count Time	Prep Date	Analysis Date
Gamma Ra-226 & hits by EPA 901.1 MOD				pCi/g		Batch # 9068191		Yld %
Actinium 228	**1.84**		**0.23**		**0.07**	90	03/09/09	04/07/09
Americium 241	0.042	U	0.091		0.074	90	03/09/09	04/07/09
Bismuth 212	**1.63**		**0.43**		**0.15**	90	**03/09/09**	**04/07/09**
Bismuth 214	**1.13**		**0.17**		**0.06**	90	**03/09/09**	**04/07/09**
Cesium 137	-0.014	U	0.041	0.070	0.033	90	03/09/09	04/07/09
Cobalt 60	-0.006	U	0.039		0.031	90	03/09/09	04/07/09
Europium 152	-0.01	U	0.10		0.08	90	03/09/09	04/07/09
Europium 154	0.02	U	0.26		0.21	90	03/09/09	04/07/09
Lead 210	0.54	U	0.84	1.50	0.70	90	03/09/09	04/07/09
Lead 212	**1.82**		**0.27**		**0.04**	90	**03/09/09**	**04/07/09**
Lead 214	**1.31**		**0.17**		**0.05**	90	**03/09/09**	**04/07/09**
Potassium 40	**10.2**		**1.2**		**0.3**	90	**03/09/09**	**04/07/09**
Protactinium 234	0.01	U	0.13		0.11	90	03/09/09	04/07/09
Radium (226)	**1.13**		**0.17**	0.70	**0.06**	90	**03/09/09**	**04/07/09**
Thallium 208	**0.675**		**0.083**		**0.020**	90	**03/09/09**	**04/07/09**
Thorium 232	**1.84**		**0.23**		**0.07**	90	**03/09/09**	**04/07/09**
Thorium 234	**1.7**		**1.0**		**0.6**	90	**03/09/09**	**04/07/09**
Uranium 235	0.07	U	0.21		0.17	90	03/09/09	04/07/09

NOTE(S)

Data are incomplete without the case narrative.
Bold results are greater than the MDL.

U Result is less than the sample detection limit.

The MDL is an estimate of the measured concentration at which there is a 99% confidence that a given analyte is given sample matrix. This is functionally analogous to the "critical value" or the "limit of detection".

Ra-226 results analyzed by EPA 901.1 MOD were calculated and reported from the 46.09 percent abundant 609.31 KeV line of Bi-214.

Tetra Tech EC, Inc.

Client Sample ID: 70-PDT-119-03

Radiochemistry

Lab Sample ID: F9C060154-027
Work Order: K75TM
Matrix: SOLID

Date Collected: 01/21/09 1310
Date Received: 03/06/09 0910

Parameter	Result	Qual	Total Uncert. (2 σ+/-)	RL	MDL	Count Time	Prep Date	Analysis Date
Gamma Ra-226 & hits by EPA 901.1 MOD				pCi/g		Batch # 9068192		Yld %
Actinium 228	2.29		0.27		0.04	90	03/09/09	03/22/09
Americium 241	0.026	U	0.098		0.081	90	03/09/09	03/22/09
Bismuth 212	1.78		0.51		0.19	90	03/09/09	03/22/09
Bismuth 214	1.38		0.21		0.07	90	03/09/09	03/22/09
Cesium 137	0.005	U	0.042	0.070	0.036	90	03/09/09	03/22/09
Cobalt 60	0.0	U	0.045		0.037	90	03/09/09	03/22/09
Europium 152	-0.04	U	0.13		0.10	90	03/09/09	03/22/09
Europium 154	-0.05	U	0.31		0.25	90	03/09/09	03/22/09
Lead 210	0.54	U	0.93	1.50	0.78	90	03/09/09	03/22/09
Lead 212	2.33		0.34		0.05	90	03/09/09	03/22/09
Lead 214	1.52		0.19		0.07	90	03/09/09	03/22/09
Potassium 40	9.7		1.3		0.3	90	03/09/09	03/22/09
Protactinium 234	-0.06	U	0.15		0.12	90	03/09/09	03/22/09
Radium (226)	1.38		0.21	0.70	0.07	90	03/09/09	03/22/09
Thallium 208	0.741		0.096		0.027	90	03/09/09	03/22/09
Thorium 232	2.29		0.27		0.04	90	03/09/09	03/22/09
Thorium 234	2.3		1.1		0.7	90	03/09/09	03/22/09
Uranium 235	0.02	U	0.23		0.19	90	03/09/09	03/22/09

NOTE(S)

Data are incomplete without the case narrative.
Bold results are greater than the MDL.

U Result is less than the sample detection limit.

The MDL is an estimate of the measured concentration at which there is a 99% confidence that a given analyte is given sample matrix. This is functionally analogous to the "critical value" or the "limit of detection".

Ra-226 results analyzed by EPA 901.1 MOD were calculated and reported from the 46.09 percent abundant 609.31 KeV line of Bi-214.

Tetra Tech EC, Inc.

Client Sample ID: 70-PDT-119-38

Radiochemistry

Lab Sample ID: F9C060154-006
Work Order: K75QJ
Matrix: SOLID

Date Collected: 01/23/09 1115
Date Received: 03/06/09 0910

Parameter	Result	Qual	Total Uncert. (2 σ+/-)	RL	MDL	Count Time	Prep Date	Analysis Date
Gamma Ra-226 & hits by EPA 901.1 MOD			pCi/g			Batch # 9068191		Yld %
Actinium 228	**0.53**		**0.15**		**0.06**	90	03/09/09	03/19/09
Americium 241	-0.01	U	0.15		0.05	90	03/09/09	03/19/09
Bismuth 212	**0.20**		**0.25**		**0.19**	90	03/09/09	03/19/09
Bismuth 214	**0.294**		**0.0996**		**0.057**	90	03/09/09	03/19/09
Cesium 137	-0.004	U	0.042	0.070	0.030	90	03/09/09	03/19/09
Cobalt 60	0.020	U	0.035		0.025	90	03/09/09	03/19/09
Europium 152	-0.035	U	0.079		0.062	90	03/09/09	03/19/09
Europium 154	-0.004	U	0.22		0.18	90	03/09/09	03/19/09
Lead 210	**0.59**	**J**	**0.71**	1.50	**0.52**	90	03/09/09	03/19/09
Lead 212	**0.58**		**0.12**		**0.04**	90	03/09/09	03/19/09
Lead 214	**0.384**		**0.097**		**0.050**	90	03/09/09	03/19/09
Potassium 40	**2.08**		**0.66**		**0.39**	90	03/09/09	03/19/09
Protactinium 234	-0.045	U	0.098		0.079	90	03/09/09	03/19/09
Radium (226)	**0.294**	**J**	**0.0996**	0.700	**0.057**	90	03/09/09	03/19/09
Thallium 208	**0.211**		**0.057**		**0.019**	90	03/09/09	03/19/09
Thorium 232	**0.53**		**0.15**		**0.06**	90	03/09/09	03/19/09
Thorium 234	0.50	U	0.72		0.53	90	03/09/09	03/19/09
Uranium 235	-0.1	U	0.87		0.12	90	03/09/09	03/19/09

NOTE(S)

Data are incomplete without the case narrative.
Bold results are greater than the MDL.

J Result is greater than sample detection limit but less than stated reporting limit.
U Result is less than the sample detection limit.

The MDL is an estimate of the measured concentration at which there is a 99% confidence that a given analyte is given sample matrix. This is functionally analogous to the "critical value" or the "limit of detection".

Ra-226 results analyzed by EPA 901.1 MOD were calculated and reported from the 46.09 percent abundant 609.31 KeV line of Bi-214.

Tetra Tech EC, Inc.

Client Sample ID: 70-PDT-119-45

Radiochemistry

Lab Sample ID: F9C060154-017
Work Order: K75RW
Matrix: SOLID

Date Collected: 01/23/09 1139
Date Received: 03/06/09 0910

Parameter	Result	Qual	Total Uncert. (2 σ+/-)	RL	MDL	Count Time	Prep Date	Analysis Date
Gamma Ra-226 & hits by EPA 901.1 MOD				pCi/g		Batch # 9068191		Yld %
Actinium 228	2.09		0.21		0.07	90	03/09/09	03/20/09
Americium 241	-0.058	U	0.099		0.080	90	03/09/09	03/20/09
Bismuth 212	**1.67**		**0.47**		**0.19**	90	**03/09/09**	**03/20/09**
Bismuth 214	**1.40**		**0.18**		**0.06**	90	**03/09/09**	**03/20/09**
Cesium 137	0.0	U	0.053	0.070	0.044	90	03/09/09	03/20/09
Cobalt 60	-0.003	U	0.032		0.026	90	03/09/09	03/20/09
Europium 152	-0.035	U	0.099		0.080	90	03/09/09	03/20/09
Europium 154	0.02	U	0.22		0.18	90	03/09/09	03/20/09
Lead 210	**1.7**		**1.0**	1.5	**0.7**	90	**03/09/09**	**03/20/09**
Lead 212	**2.11**		**0.19**		**0.06**	90	**03/09/09**	**03/20/09**
Lead 214	**1.38**		**0.15**		**0.06**	90	**03/09/09**	**03/20/09**
Potassium 40	**5.95**		**0.81**		**0.28**	90	**03/09/09**	**03/20/09**
Protactinium 234	-0.15	U	0.15		0.12	90	03/09/09	03/20/09
Radium (226)	**1.40**		**0.18**	0.70	**0.06**	90	**03/09/09**	**03/20/09**
Thallium 208	**0.741**		**0.091**		**0.029**	90	**03/09/09**	**03/20/09**
Thorium 232	**2.09**		**0.21**		**0.07**	90	**03/09/09**	**03/20/09**
Thorium 234	**1.5**		**1.0**		**0.7**	90	**03/09/09**	**03/20/09**
Uranium 235	0.18	U	0.23		0.19	90	03/09/09	03/20/09

NOTE(S)

Data are incomplete without the case narrative.
Bold results are greater than the MDL.

U Result is less than the sample detection limit.

The MDL is an estimate of the measured concentration at which there is a 99% confidence that a given analyte is given sample matrix. This is functionally analogous to the "critical value" or the "limit of detection".

Ra-226 results analyzed by EPA 901.1 MOD were calculated and reported from the 46.09 percent abundant 609.31 KeV line of Bi-214.

Tetra Tech EC, Inc.

Client Sample ID: 70-PDT-119-48

Radiochemistry

Lab Sample ID: F9C060154-011
Work Order: K75Q9
Matrix: SOLID

Date Collected: 01/23/09 1148
Date Received: 03/06/09 0910

Parameter	Result	Qual	Total Uncert. (2 σ+/-)	RL	MDL	Count Time	Prep Date	Analysis Date
Gamma Ra-226 & hits by EPA 901.1 MOD				pCi/g		Batch # 9068191		Yld %
Actinium 228	2.58		0.28		0.07	90	03/09/09	03/20/09
Americium 241	0.0004	U	0.13		0.10	90	03/09/09	03/20/09
Bismuth 212	2.52		0.63		0.22	90	03/09/09	03/20/09
Bismuth 214	1.65		0.20		0.06	90	03/09/09	03/20/09
Cesium 137	-0.021	U	0.052	0.070	0.041	90	03/09/09	03/20/09
Cobalt 60	-0.011	U	0.049		0.039	90	03/09/09	03/20/09
Europium 152	-0.04	U	0.14		0.11	90	03/09/09	03/20/09
Europium 154	-0.13	U	0.38		0.31	90	03/09/09	03/20/09
Lead 210	2.0		1.3	1.5	0.8	90	03/09/09	03/20/09
Lead 212	2.80		0.25		0.08	90	03/09/09	03/20/09
Lead 214	1.85		0.21		0.08	90	03/09/09	03/20/09
Potassium 40	8.8		1.2		0.3	90	03/09/09	03/20/09
Protactinium 234	-0.009	U	0.19		0.16	90	03/09/09	03/20/09
Radium (226)	1.65		0.20	0.70	0.06	90	03/09/09	03/20/09
Thallium 208	0.90		0.11		0.03	90	03/09/09	03/20/09
Thorium 232	2.58		0.28		0.07	90	03/09/09	03/20/09
Thorium 234	2.02		0.67		1.1	90	03/09/09	03/20/09
Uranium 235	0.05	U	0.31		0.26	90	03/09/09	03/20/09

NOTE(S)

Data are incomplete without the case narrative.
Bold results are greater than the MDL.

U Result is less than the sample detection limit.

The MDL is an estimate of the measured concentration at which there is a 99% confidence that a given analyte is given sample matrix. This is functionally analogous to the "critical value" or the "limit of detection".

Ra-226 results analyzed by EPA 901.1 MOD were calculated and reported from the 46.09 percent abundant 609.31 KeV line of Bi-214.

Tetra Tech EC, Inc.

Client Sample ID: 70-PDT-119-53

Radiochemistry

Lab Sample ID: F9C060154-008
Work Order: K75QV
Matrix: SOLID

Date Collected: 02/03/09 1345
Date Received: 03/06/09 0910

Parameter	Result	Qual	Total Uncert. (2 σ+/-)	RL	MDL	Count Time	Prep Date	Analysis Date
Gamma Ra-226 & hits by EPA 901.1 MOD				pCi/g		Batch # 9068191		Yld %
Actinium 228	**0.61**		**0.16**		**0.05**	90	03/09/09	03/20/09
Americium 241	-0.023	U	0.086		0.070	90	03/09/09	03/20/09
Bismuth 212	**0.26**		**0.28**		**0.20**	90	03/09/09	03/20/09
Bismuth 214	**0.44**		**0.11**		**0.05**	90	03/09/09	03/20/09
Cesium 137	-0.002	U	0.032	0.070	0.026	90	03/09/09	03/20/09
Cobalt 60	-0.011	U	0.039		0.030	90	03/09/09	03/20/09
Europium 152	0.037	U	0.078		0.061	90	03/09/09	03/20/09
Europium 154	-0.006	U	0.19		0.16	90	03/09/09	03/20/09
Lead 210	**1.17**	J	**0.77**	1.50	**0.50**	90	03/09/09	03/20/09
Lead 212	**0.640**		**0.095**		**0.040**	90	03/09/09	03/20/09
Lead 214	**0.57**		**0.10**		**0.04**	90	03/09/09	03/20/09
Potassium 40	**9.5**		**1.3**		**0.2**	90	03/09/09	03/20/09
Protactinium 234	-0.05	U	0.12		0.1	90	03/09/09	03/20/09
Radium (226)	**0.44**	J	**0.11**	0.70	**0.05**	90	03/09/09	03/20/09
Thallium 208	**0.209**		**0.055**		**0.023**	90	03/09/09	03/20/09
Thorium 232	**0.61**		**0.16**		**0.05**	90	03/09/09	03/20/09
Thorium 234	**1.2**		**1.0**		**0.6**	90	03/09/09	03/20/09
Uranium 235	0.01	U	0.19		0.16	90	03/09/09	03/20/09

NOTE(S)

Data are incomplete without the case narrative.
Bold results are greater than the MDL.

J Result is greater than sample detection limit but less than stated reporting limit.
U Result is less than the sample detection limit.

The MDL is an estimate of the measured concentration at which there is a 99% confidence that a given analyte is given sample matrix. This is functionally analogous to the "critical value" or the "limit of detection".

Ra-226 results analyzed by EPA 901.1 MOD were calculated and reported from the 46.09 percent abundant 609.31 KeV line of Bi-214.

Tetra Tech EC, Inc.

Client Sample ID: 70-PGT-119-61

Radiochemistry

Lab Sample ID: F9F040177-041
Work Order: LEA0T
Matrix: SOLID

Date Collected: 04/20/09 1307
Date Received: 06/04/09 0930

Parameter	Result	Qual	Total Uncert. (2 σ+/-)	RL	MDL	Count Time	Prep Date	Analysis Date
Gamma Ra-226 & hits by EPA 901.1 MOD				**pCi/g**		**Batch # 9155500**		**Yld %**
Actinium 228	**0.82**		**0.25**		**0.13**	30	**06/04/09**	**06/12/09**
Americium 241	-0.0283	U	0.0996		0.080	30	06/04/09	06/12/09
Bismuth 212	**0.32**		**0.45**		**0.32**	30	**06/04/09**	**06/12/09**
Bismuth 214	**0.53**		**0.18**		**0.06**	30	**06/04/09**	**06/12/09**
Cesium 137	0.017	U	0.055	0.070	0.042	30	06/04/09	06/12/09
Cobalt 60	-0.017	U	0.066		0.051	30	06/04/09	06/12/09
Europium 152	0.02	U	0.12		0.09	30	06/04/09	06/12/09
Europium 154	0.0	U	0.087		0.10	30	06/04/09	06/12/09
Lead 210	0.36	U	0.96	1.50	0.83	30	06/04/09	06/12/09
Lead 212	**0.82**		**0.20**		**0.07**	30	**06/04/09**	**06/12/09**
Lead 214	**0.70**		**0.16**		**0.06**	30	**06/04/09**	**06/12/09**
Potassium 40	**4.1**		**1.4**		**0.6**	30	**06/04/09**	**06/12/09**
Protactinium 234	-0.03	U	0.18		0.15	30	06/04/09	06/12/09
Radium (226)	**0.53**	**J**	**0.18**	0.70	**0.06**	30	**06/04/09**	**06/12/09**
Thallium 208	**0.297**		**0.088**		**0.030**	30	**06/04/09**	**06/12/09**
Thorium 232	**0.82**		**0.25**		**0.13**	30	**06/04/09**	**06/12/09**
Thorium 234	0.2	U	1.1		0.9	30	06/04/09	06/12/09
Uranium 235	0.005	U	0.17		0.15	30	06/04/09	06/12/09

NOTE(S)

Data are incomplete without the case narrative.
Bold results are greater than the MDL.

J Result is greater than sample detection limit but less than stated reporting limit.
U Result is less than the sample detection limit.

The MDL is an estimate of the measured concentration at which there is a 99% confidence that a given analyte is given sample matrix. This is functionally analogous to the "critical value" or the "limit of detection".

Ra-226 results analyzed by EPA 901.1 MOD were calculated and reported from the 46.09 percent abundant 609.31 KeV line of Bi-214.

Tetra Tech EC, Inc.

Client Sample ID: 70-PGT-119-75

Radiochemistry

Lab Sample ID: F9F040177-042
Work Order: LEA0X
Matrix: SOLID

Date Collected: 04/20/09 1323
Date Received: 06/04/09 0930

Parameter	Result	Qual	Total Uncert. (2 σ+/-)	RL	MDL	Count Time	Prep Date	Analysis Date
Gamma Ra-226 & hits by EPA 901.1 MOD				**pCi/g**		**Batch # 9155500**		**Yld %**
Actinium 228	0.15	U	0.24		0.17	30	06/04/09	06/13/09
Americium 241	-0.03	U	0.12		0.1	30	06/04/09	06/13/09
Bismuth 212	0.22	U	0.46		0.35	30	06/04/09	06/13/09
Bismuth 214	**0.53**		**0.15**		**0.05**	30	**06/04/09**	**06/13/09**
Cesium 137	0.036	U	0.056	0.070	0.040	30	06/04/09	06/13/09
Cobalt 60	**0.059**		**0.080**		**0.054**	30	**06/04/09**	**06/13/09**
Europium 152	0.03	U	0.14		0.11	30	06/04/09	06/13/09
Europium 154	-0.13	U	0.49		0.38	30	06/04/09	06/13/09
Lead 210	0.7	U	1.1	1.5	0.9	30	06/04/09	06/13/09
Lead 212	**0.52**		**0.12**		**0.04**	30	**06/04/09**	**06/13/09**
Lead 214	**0.43**		**0.12**		**0.07**	30	**06/04/09**	**06/13/09**
Potassium 40	**5.0**		**1.6**		**0.7**	30	**06/04/09**	**06/13/09**
Protactinium 234	-0.02	U	0.15		0.12	30	06/04/09	06/13/09
Radium (226)	**0.53**	**J**	**0.15**	0.70	**0.05**	30	**06/04/09**	**06/13/09**
Thallium 208	0.046	U	0.062		0.048	30	06/04/09	06/13/09
Thorium 232	0.15	U	0.24		0.17	30	06/04/09	06/13/09
Thorium 234	-0.6	U	40		0.9	30	06/04/09	06/13/09
Uranium 235	-0.1	U	1.2		0.2	30	06/04/09	06/13/09

NOTE(S)

Data are incomplete without the case narrative.
Bold results are greater than the MDL.

J Result is greater than sample detection limit but less than stated reporting limit.
U Result is less than the sample detection limit.

The MDL is an estimate of the measured concentration at which there is a 99% confidence that a given analyte is given sample matrix. This is functionally analogous to the "critical value" or the "limit of detection".

Ra-226 results analyzed by EPA 901.1 MOD were calculated and reported from the 46.09 percent abundant 609.31 KeV line of Bi-214.

Tetra Tech EC, Inc.

Client Sample ID: 70-PGT-119-82

Radiochemistry

Lab Sample ID: F9F040177-043
Work Order: LEA01
Matrix: SOLID

Date Collected: 05/07/09 1050
Date Received: 06/04/09 0930

Parameter	Result	Qual	Total Uncert. (2 σ+/-)	RL	MDL	Count Time	Prep Date	Analysis Date
Gamma Ra-226 & hits by EPA 901.1 MOD				**pCi/g**		**Batch # 9155500**		**Yld %**
Actinium 228	**0.30**		**0.18**		**0.11**	30	**06/04/09**	**06/13/09**
Americium 241	0.017	U	0.081		0.065	30	06/04/09	06/13/09
Bismuth 212	**0.24**		**0.35**		**0.23**	30	**06/04/09**	**06/13/09**
Bismuth 214	**0.28**		**0.15**		**0.09**	30	**06/04/09**	**06/13/09**
Cesium 137	-0.02	U	0.15	0.07	0.06	30	06/04/09	06/13/09
Cobalt 60	-0.05	U	1.9		0.09	30	06/04/09	06/13/09
Europium 152	-0.02	U	0.13		0.10	30	06/04/09	06/13/09
Europium 154	0.11	U	0.34		0.25	30	06/04/09	06/13/09
Lead 210	0.4	U	1.1	1.5	0.9	30	06/04/09	06/13/09
Lead 212	**0.54**		**0.15**		**0.05**	30	**06/04/09**	**06/13/09**
Lead 214	**0.48**		**0.14**		**0.06**	30	**06/04/09**	**06/13/09**
Potassium 40	**2.8**		**1.3**		**0.7**	30	**06/04/09**	**06/13/09**
Protactinium 234	-0.03	U	0.14		0.11	30	06/04/09	06/13/09
Radium (226)	**0.28**	**J**	**0.15**	0.70	**0.09**	30	**06/04/09**	**06/13/09**
Thallium 208	**0.138**		**0.056**		**0.013**	30	**06/04/09**	**06/13/09**
Thorium 232	**0.30**		**0.18**		**0.11**	30	**06/04/09**	**06/13/09**
Thorium 234	0.4	U	1.1		0.9	30	06/04/09	06/13/09
Uranium 235	-0.14	U	0.60		0.21	30	06/04/09	06/13/09

NOTE(S)

Data are incomplete without the case narrative.
Bold results are greater than the MDL.

J Result is greater than sample detection limit but less than stated reporting limit.
U Result is less than the sample detection limit.

The MDL is an estimate of the measured concentration at which there is a 99% confidence that a given analyte is given sample matrix. This is functionally analogous to the "critical value" or the "limit of detection".

Ra-226 results analyzed by EPA 901.1 MOD were calculated and reported from the 46.09 percent abundant 609.31 KeV line of Bi-214.

Tetra Tech EC, Inc.

Client Sample ID: 70-PGT-119-94

Radiochemistry

Lab Sample ID: F9F040177-044
Work Order: LEA04
Matrix: SOLID

Date Collected: 05/07/09 1400
Date Received: 06/04/09 0930

Parameter	Result	Qual	Total Uncert. (2 σ+/-)	RL	MDL	Count Time	Prep Date	Analysis Date
Gamma Ra-226 & hits by EPA 901.1 MOD				**pCi/g**		**Batch # 9155500**		**Yld %**
Actinium 228	**1.83**		**0.41**		**0.09**	30	**06/04/09**	**06/13/09**
Americium 241	0.03	U	0.15		0.12	30	06/04/09	06/13/09
Bismuth 212	**2.33**		**0.68**		**0.17**	30	**06/04/09**	**06/13/09**
Bismuth 214	**1.34**		**0.26**		**0.07**	30	**06/04/09**	**06/13/09**
Cesium 137	0.012	U	0.069	0.070	0.055	30	06/04/09	06/13/09
Cobalt 60	-0.018	U	0.074		0.058	30	06/04/09	06/13/09
Europium 152	-0.07	U	0.19		0.15	30	06/04/09	06/13/09
Europium 154	-0.02	U	0.41		0.34	30	06/04/09	06/13/09
Lead 210	0.7	U	1.4	1.5	1.2	30	06/04/09	06/13/09
Lead 212	**1.98**		**0.35**		**0.1**	30	**06/04/09**	**06/13/09**
Lead 214	**1.41**		**0.26**		**0.08**	30	**06/04/09**	**06/13/09**
Potassium 40	**3.2**		**1.2**		**0.6**	30	**06/04/09**	**06/13/09**
Protactinium 234	-0.04	U	0.21		0.17	30	06/04/09	06/13/09
Radium (226)	**1.34**		**0.26**	0.70	**0.07**	30	**06/04/09**	**06/13/09**
Thallium 208	**0.68**		**0.13**		**0.03**	30	**06/04/09**	**06/13/09**
Thorium 232	**1.83**		**0.41**		**0.09**	30	**06/04/09**	**06/13/09**
Thorium 234	-0.7	U	49		1	30	06/04/09	06/13/09
Uranium 235	0.25	U	0.35		0.28	30	06/04/09	06/13/09

NOTE(S)

Data are incomplete without the case narrative.
Bold results are greater than the MDL.

U Result is less than the sample detection limit.

The MDL is an estimate of the measured concentration at which there is a 99% confidence that a given analyte is given sample matrix. This is functionally analogous to the "critical value" or the "limit of detection".

Ra-226 results analyzed by EPA 901.1 MOD were calculated and reported from the 46.09 percent abundant 609.31 KeV line of Bi-214.

Tetra Tech EC, Inc.

Client Sample ID: 70-PGT-119-103

Radiochemistry

Lab Sample ID: F9F040177-045
Work Order: LEA07
Matrix: SOLID

Date Collected: 05/15/09 1305
Date Received: 06/04/09 0930

Parameter	Result	Qual	Total Uncert. (2 σ+/-)	RL	MDL	Count Time	Prep Date	Analysis Date
Gamma Ra-226 & hits by EPA 901.1 MOD				**pCi/g**		**Batch # 9155500**		**Yld %**
Actinium 228	**0.48**		**0.18**		**0.04**	30	**06/04/09**	**06/13/09**
Americium 241	0.03	U	0.11		0.09	30	06/04/09	06/13/09
Bismuth 212	0.22	U	0.35		0.25	30	06/04/09	06/13/09
Bismuth 214	**0.36**		**0.15**		**0.08**	30	**06/04/09**	**06/13/09**
Cesium 137	0.013	U	0.052	0.070	0.041	30	06/04/09	06/13/09
Cobalt 60	0.0	U	0.012		0.014	30	06/04/09	06/13/09
Europium 152	-0.002	U	0.15		0.12	30	06/04/09	06/13/09
Europium 154	0.0	U	0.31		0.25	30	06/04/09	06/13/09
Lead 210	0.2	U	1.1	1.5	1.0	30	06/04/09	06/13/09
Lead 212	**0.48**		**0.15**		**0.08**	30	**06/04/09**	**06/13/09**
Lead 214	**0.48**		**0.17**		**0.1**	30	**06/04/09**	**06/13/09**
Potassium 40	**4.6**		**1.2**		**0.5**	30	**06/04/09**	**06/13/09**
Protactinium 234	-0.003	U	0.16		0.13	30	06/04/09	06/13/09
Radium (226)	**0.36**	**J**	**0.15**	0.70	**0.08**	30	**06/04/09**	**06/13/09**
Thallium 208	**0.126**		**0.064**		**0.037**	30	**06/04/09**	**06/13/09**
Thorium 232	**0.48**		**0.18**		**0.04**	30	**06/04/09**	**06/13/09**
Thorium 234	0.9	U	1.4		1.0	30	06/04/09	06/13/09
Uranium 235	0.11	U	0.25		0.20	30	06/04/09	06/13/09

NOTE(S)

Data are incomplete without the case narrative.
Bold results are greater than the MDL.

J Result is greater than sample detection limit but less than stated reporting limit.
U Result is less than the sample detection limit.

The MDL is an estimate of the measured concentration at which there is a 99% confidence that a given analyte is given sample matrix. This is functionally analogous to the "critical value" or the "limit of detection".

Ra-226 results analyzed by EPA 901.1 MOD were calculated and reported from the 46.09 percent abundant 609.31 KeV line of Bi-214.

Tetra Tech EC, Inc.

Client Sample ID: 70-PGT-119-108

Radiochemistry

Lab Sample ID: F9G150346-007
Work Order: LGJXR
Matrix: SOLID

Date Collected: 05/27/09 1122
Date Received: 07/15/09 0930

Parameter	Result	Qual	Total Uncert. (2 σ+/-)	RL	MDL	Count Time	Prep Date	Analysis Date
Gamma Ra-226 & hits by EPA 901.1 MOD				**pCi/g**		**Batch # 9197429**		**Yld %**
Actinium 228	**0.60**		**0.19**		**0.10**	30	**07/16/09**	**08/01/09**
Americium 241	0.016	U	0.092		0.074	30	07/16/09	08/01/09
Bismuth 212	0.16	U	0.36		0.27	30	07/16/09	08/01/09
Bismuth 214	**0.38**		**0.12**		**0.06**	30	**07/16/09**	**08/01/09**
Cesium 137	-0.013	U	0.049	0.070	0.038	30	07/16/09	08/01/09
Cobalt 60	0.0	U	0.075		0.062	30	07/16/09	08/01/09
Europium 152	0.03	U	0.10		0.08	30	07/16/09	08/01/09
Europium 154	-0.05	U	0.36		0.29	30	07/16/09	08/01/09
Lead 210	**1.3**	**J**	**1.2**	1.5	**0.8**	30	**07/16/09**	**08/01/09**
Lead 212	**0.71**		**0.16**		**0.07**	30	**07/16/09**	**08/01/09**
Lead 214	**0.47**		**0.13**		**0.06**	30	**07/16/09**	**08/01/09**
Potassium 40	**8.0**		**1.4**		**0.5**	30	**07/16/09**	**08/01/09**
Protactinium 234	0.0004	U	0.14		0.11	30	07/16/09	08/01/09
Radium (226)	**0.38**	**J**	**0.12**	0.70	**0.06**	30	**07/16/09**	**08/01/09**
Thallium 208	**0.264**		**0.083**		**0.037**	30	**07/16/09**	**08/01/09**
Thorium 232	**0.60**		**0.19**		**0.10**	30	**07/16/09**	**08/01/09**
Thorium 234	0.5	U	1.1		0.9	30	07/16/09	08/01/09
Uranium 235	-0.001	U	0.26		0.20	30	07/16/09	08/01/09

NOTE(S)

Data are incomplete without the case narrative.
Bold results are greater than the MDL.

J Result is greater than sample detection limit but less than stated reporting limit.
U Result is less than the sample detection limit.

The MDL is an estimate of the measured concentration at which there is a 99% confidence that a given analyte is given sample matrix. This is functionally analogous to the "critical value" or the "limit of detection".

Ra-226 results analyzed by EPA 901.1 MOD were calculated and reported from the 46.09 percent abundant 609.31 KeV line of Bi-214.

Tetra Tech EC, Inc.

Client Sample ID: 70-PGT-119-110

Radiochemistry

Lab Sample ID: F9G150346-008
Work Order: LGJXT
Matrix: SOLID

Date Collected: 05/27/09 1133
Date Received: 07/15/09 0930

Parameter	Result	Qual	Total Uncert. (2 σ+/-)	RL	MDL	Count Time	Prep Date	Analysis Date
Gamma Ra-226 & hits by EPA 901.1 MOD				**pCi/g**		**Batch # 9197429**		**Yld %**
Actinium 228	**0.95**		**0.24**		**0.09**	30	**07/16/09**	**08/01/09**
Americium 241	-0.03	U	0.16		0.13	30	07/16/09	08/01/09
Bismuth 212	0.29	U	0.49		0.36	30	07/16/09	08/01/09
Bismuth 214	**0.67**		**0.21**		**0.08**	30	**07/16/09**	**08/01/09**
Cesium 137	-0.020	U	0.074	0.070	0.058	30	07/16/09	08/01/09
Cobalt 60	0.0	U	0.092		0.076	30	07/16/09	08/01/09
Europium 152	0.04	U	0.16		0.12	30	07/16/09	08/01/09
Europium 154	0.04	U	0.42		0.34	30	07/16/09	08/01/09
Lead 210	0.4	U	1.1	1.5	0.9	30	07/16/09	08/01/09
Lead 212	**0.90**		**0.22**		**0.09**	30	**07/16/09**	**08/01/09**
Lead 214	**0.76**		**0.20**		**0.08**	30	**07/16/09**	**08/01/09**
Potassium 40	**10.2**		**2.1**		**0.6**	30	**07/16/09**	**08/01/09**
Protactinium 234	0.03	U	0.22		0.18	30	07/16/09	08/01/09
Radium (226)	**0.67**	**J**	**0.21**	0.70	**0.08**	30	**07/16/09**	**08/01/09**
Thallium 208	**0.421**		**0.096**		**0.024**	30	**07/16/09**	**08/01/09**
Thorium 232	**0.95**		**0.24**		**0.09**	30	**07/16/09**	**08/01/09**
Thorium 234	**2.0**		**1.5**		**1.2**	30	**07/16/09**	**08/01/09**
Uranium 235	-0.05	U	1.9		0.2	30	07/16/09	08/01/09

NOTE(S)

Data are incomplete without the case narrative.
Bold results are greater than the MDL.

J Result is greater than sample detection limit but less than stated reporting limit.
U Result is less than the sample detection limit.

The MDL is an estimate of the measured concentration at which there is a 99% confidence that a given analyte is given sample matrix. This is functionally analogous to the "critical value" or the "limit of detection".

Ra-226 results analyzed by EPA 901.1 MOD were calculated and reported from the 46.09 percent abundant 609.31 KeV line of Bi-214.

ATTACHMENT 4

BACKFILL MATERIAL
RESRAD REPORT
(on CD only)

This page intentionally left blank.

Table of Contents

Part I: Mixture Sums and Single Radionuclide Guidelines

Dose Conversion Factor (and Related) Parameter Summary ... 2
Site-Specific Parameter Summary 4
Summary of Pathway Selections 8
Contaminated Zone and Total Dose Summary 9
Total Dose Components
Time = 0.000E+00 10
Time = 1.000E+00 11
Time = 3.000E+00 12
Time = 1.000E+01 13
Time = 3.000E+01 14
Time = 1.000E+02 15
Time = 3.000E+02 16
Time = 1.000E+03 17
Dose/Source Ratios Summed Over All Pathways 18
Single Radionuclide Soil Guidelines 18
Dose Per Nuclide Summed Over All Pathways 19
Soil Concentration Per Nuclide 19

Summary : RESRAD Default Parameters
File : C:\RESRAD_FAMILY\RESRAD\6.5\USERFILES\PARCEL G SURVEY UNIT 119 BACKFILL MDA.RAD

Dose Conversion Factor (and Related) Parameter Summary
Dose Library: FGR 12 & FGR 11

Menu	Parameter	Current Value#	Base Case*	Parameter Name
A-1	DCF's for external ground radiation, (mrem/yr)/(pCi/g)			
A-1	At-218 (Source: FGR 12)	5.847E-03	5.847E-03	DCF1(1)
A-1	Ba-137m (Source: FGR 12)	3.606E+00	3.606E+00	DCF1(2)
A-1	Bi-210 (Source: FGR 12)	3.606E-03	3.606E-03	DCF1(3)
A-1	Bi-214 (Source: FGR 12)	9.808E+00	9.808E+00	DCF1(4)
A-1	Cs-137 (Source: FGR 12)	7.510E-04	7.510E-04	DCF1(5)
A-1	Pb-210 (Source: FGR 12)	2.447E-03	2.447E-03	DCF1(6)
A-1	Pb-214 (Source: FGR 12)	1.341E+00	1.341E+00	DCF1(7)
A-1	Po-210 (Source: FGR 12)	5.231E-05	5.231E-05	DCF1(8)
A-1	Po-214 (Source: FGR 12)	5.138E-04	5.138E-04	DCF1(9)
A-1	Po-218 (Source: FGR 12)	5.642E-05	5.642E-05	DCF1(10)
A-1	Ra-226 (Source: FGR 12)	3.176E-02	3.176E-02	DCF1(11)
A-1	Rn-222 (Source: FGR 12)	2.354E-03	2.354E-03	DCF1(12)
A-1	Sr-90 (Source: FGR 12)	7.043E-04	7.043E-04	DCF1(13)
A-1	Tl-210 (Source: no data)	0.000E+00	-2.000E+00	DCF1(14)
A-1	Y-90 (Source: FGR 12)	2.391E-02	2.391E-02	DCF1(15)
B-1	Dose conversion factors for inhalation, mrem/pCi:			
B-1	Cs-137+D	3.190E-05	3.190E-05	DCF2(1)
B-1	Pb-210+D	2.320E-02	1.360E-02	DCF2(2)
B-1	Ra-226+D	8.594E-03	8.580E-03	DCF2(3)
B-1	Sr-90+D	1.308E-03	1.300E-03	DCF2(4)
D-1	Dose conversion factors for ingestion, mrem/pCi:			
D-1	Cs-137+D	5.000E-05	5.000E-05	DCF3(1)
D-1	Pb-210+D	7.276E-03	5.370E-03	DCF3(2)
D-1	Ra-226+D	1.321E-03	1.320E-03	DCF3(3)
D-1	Sr-90+D	1.528E-04	1.420E-04	DCF3(4)
D-34	Food transfer factors:			
D-34	Cs-137+D , plant/soil concentration ratio, dimensionless	4.000E-02	4.000E-02	RTF(1,1)
D-34	Cs-137+D , beef/livestock-intake ratio, (pCi/kg)/(pCi/d)	3.000E-02	3.000E-02	RTF(1,2)
D-34	Cs-137+D , milk/livestock-intake ratio, (pCi/L)/(pCi/d)	8.000E-03	8.000E-03	RTF(1,3)
D-34	Pb-210+D , plant/soil concentration ratio, dimensionless	1.000E-02	1.000E-02	RTF(2,1)
D-34	Pb-210+D , beef/livestock-intake ratio, (pCi/kg)/(pCi/d)	8.000E-04	8.000E-04	RTF(2,2)
D-34	Pb-210+D , milk/livestock-intake ratio, (pCi/L)/(pCi/d)	3.000E-04	3.000E-04	RTF(2,3)
D-34	Ra-226+D , plant/soil concentration ratio, dimensionless	4.000E-02	4.000E-02	RTF(3,1)
D-34	Ra-226+D , beef/livestock-intake ratio, (pCi/kg)/(pCi/d)	1.000E-03	1.000E-03	RTF(3,2)
D-34	Ra-226+D , milk/livestock-intake ratio, (pCi/L)/(pCi/d)	1.000E-03	1.000E-03	RTF(3,3)
D-34	Sr-90+D , plant/soil concentration ratio, dimensionless	3.000E-01	3.000E-01	RTF(4,1)
D-34	Sr-90+D , beef/livestock-intake ratio, (pCi/kg)/(pCi/d)	8.000E-03	8.000E-03	RTF(4,2)
D-34	Sr-90+D , milk/livestock-intake ratio, (pCi/L)/(pCi/d)	2.000E-03	2.000E-03	RTF(4,3)
D-5	Bioaccumulation factors, fresh water, L/kg:			
D-5	Cs-137+D , fish	2.000E+03	2.000E+03	BIOFAC(1,1)
D-5	Cs-137+D , crustacea and mollusks	1.000E+02	1.000E+02	BIOFAC(1,2)

Dose Conversion Factor (and Related) Parameter Summary (continued)

Dose Library: FGR 12 & FGR 11

Menu	Parameter	Current Value#	Base Case*	Parameter Name
D-5	Pb-210+D , fish	3.000E+02	3.000E+02	BIOFAC(2,1)
D-5	Pb-210+D , crustacea and mollusks	1.000E+02	1.000E+02	BIOFAC(2,2)
D-5				
D-5	Ra-226+D , fish	5.000E+01	5.000E+01	BIOFAC(3,1)
D-5	Ra-226+D , crustacea and mollusks	2.500E+02	2.500E+02	BIOFAC(3,2)
D-5				
D-5	Sr-90+D , fish	6.000E+01	6.000E+01	BIOFAC(4,1)
D-5	Sr-90+D , crustacea and mollusks	1.000E+02	1.000E+02	BIOFAC(4,2)

#For DCF1(xxx) only, factors are for infinite depth & area. See ETFG table in Ground Pathway of Detailed Report.

*Base Case means Default.Lib w/o Associate Nuclide contributions.

Site-Specific Parameter Summary

Menu	Parameter	User Input	Default	Used by RESRAD (If different from user input)	Parameter Name
R011	Area of contaminated zone (m**2)	5.79E+02	1.000E+04	---	AREA
R011	Thickness of contaminated zone (m)	2.00E+00	2.000E+00	---	THICK0
R011	Fraction of contamination that is submerged	0.00E+00	0.000E+00	---	SUBMFRACT
R011	Length parallel to aquifer flow (m)	2.40E+01	1.000E+02	---	LCZPAQ
R011	Basic radiation dose limit (mrem/yr)	2.50E+01	3.000E+01	---	BRDL
R011	Time since placement of material (yr)	0.00E+00	0.000E+00	---	TI
R011	Times for calculations (yr)	1.00E+00	1.000E+00	---	T(2)
R011	Times for calculations (yr)	3.00E+00	3.000E+00	---	T(3)
R011	Times for calculations (yr)	1.00E+01	1.000E+01	---	T(4)
R011	Times for calculations (yr)	3.00E+01	3.000E+01	---	T(5)
R011	Times for calculations (yr)	1.00E+02	1.000E+02	---	T(6)
R011	Times for calculations (yr)	3.00E+02	3.000E+02	---	T(7)
R011	Times for calculations (yr)	1.00E+03	1.000E+03	---	T(8)
R011	Times for calculations (yr)	not used	0.000E+00	---	T(9)
R011	Times for calculations (yr)	not used	0.000E+00	---	T(10)
R012	Initial principal radionuclide (pCi/g): Cs-137	5.30E-02	0.000E+00	---	S1(1)
R012	Initial principal radionuclide (pCi/g): Pb-210	3.73E-01	0.000E+00	---	S1(2)
R012	Initial principal radionuclide (pCi/g): Ra-226	3.73E-01	0.000E+00	---	S1(3)
R012	Initial principal radionuclide (pCi/g): Sr-90	7.00E-02	0.000E+00	---	S1(4)
R012	Concentration in groundwater (pCi/L): Cs-137	not used	0.000E+00	---	W1(1)
R012	Concentration in groundwater (pCi/L): Pb-210	not used	0.000E+00	---	W1(2)
R012	Concentration in groundwater (pCi/L): Ra-226	not used	0.000E+00	---	W1(3)
R012	Concentration in groundwater (pCi/L): Sr-90	not used	0.000E+00	---	W1(4)
R013	Cover depth (m)	0.00E+00	0.000E+00	---	COVER0
R013	Density of cover material (g/cm**3)	not used	1.500E+00	---	DENSCV
R013	Cover depth erosion rate (m/yr)	not used	1.000E-03	---	VCV
R013	Density of contaminated zone (g/cm**3)	1.50E+00	1.500E+00	---	DENSCZ
R013	Contaminated zone erosion rate (m/yr)	1.00E-03	1.000E-03	---	VCZ
R013	Contaminated zone total porosity	4.00E-01	4.000E-01	---	TPCZ
R013	Contaminated zone field capacity	2.00E-01	2.000E-01	---	FCCZ
R013	Contaminated zone hydraulic conductivity (m/yr)	1.00E+01	1.000E+01	---	HCCZ
R013	Contaminated zone b parameter	5.30E+00	5.300E+00	---	BCZ
R013	Average annual wind speed (m/sec)	2.00E+00	2.000E+00	---	WIND
R013	Humidity in air (g/m**3)	not used	8.000E+00	---	HUMID
R013	Evapotranspiration coefficient	5.00E-01	5.000E-01	---	EVAPTR
R013	Precipitation (m/yr)	1.00E+00	1.000E+00	---	PRECIP
R013	Irrigation (m/yr)	2.00E-01	2.000E-01	---	RI
R013	Irrigation mode	overhead	overhead	---	IDITCH
R013	Runoff coefficient	2.00E-01	2.000E-01	---	RUNOFF
R013	Watershed area for nearby stream or pond (m**2)	1.00E+06	1.000E+06	---	WAREA
R013	Accuracy for water/soil computations	1.00E-03	1.000E-03	---	EPS
R014	Density of saturated zone (g/cm**3)	1.50E+00	1.500E+00	---	DENSAQ
R014	Saturated zone total porosity	4.00E-01	4.000E-01	---	TPSZ
R014	Saturated zone effective porosity	2.00E-01	2.000E-01	---	EPSZ
R014	Saturated zone field capacity	2.00E-01	2.000E-01	---	FCSZ
R014	Saturated zone hydraulic conductivity (m/yr)	1.00E+02	1.000E+02	---	HCSZ
R014	Saturated zone hydraulic gradient	2.00E-02	2.000E-02	---	HGWT

Site-Specific Parameter Summary (continued)

Menu	Parameter	User Input	Default	Used by RESRAD (If different from user input)	Parameter Name
R014	Saturated zone b parameter	5.300E+00	5.300E+00	---	BSZ
R014	Water table drop rate (m/yr)	1.000E-03	1.000E-03	---	VWT
R014	Well pump intake depth (m below water table)	1.000E+01	1.000E+01	---	DWIBWT
R014	Model: Nondispersion (ND) or Mass-Balance (MB)	ND	ND	---	MODEL
R014	Well pumping rate (m**3/yr)	2.500E+02	2.500E+02	---	UW
R015	Number of unsaturated zone strata	1	1	---	NS
R015	Unsat. zone 1, thickness (m)	4.000E+00	4.000E+00	---	H(1)
R015	Unsat. zone 1, soil density (g/cm**3)	1.500E+00	1.500E+00	---	DENSUZ(1)
R015	Unsat. zone 1, total porosity	4.000E-01	4.000E-01	---	TPUZ(1)
R015	Unsat. zone 1, effective porosity	2.000E-01	2.000E-01	---	EPUZ(1)
R015	Unsat. zone 1, field capacity	2.000E-01	2.000E-01	---	FCUZ(1)
R015	Unsat. zone 1, soil-specific b parameter	5.300E+00	5.300E+00	---	BUZ(1)
R015	Unsat. zone 1, hydraulic conductivity (m/yr)	1.000E+01	1.000E+01	---	HCUZ(1)
R016	Distribution coefficients for Cs-137				
R016	Contaminated zone (cm**3/g)	4.600E+03	4.600E+03	---	DCNUCC(1)
R016	Unsaturated zone 1 (cm**3/g)	4.600E+03	4.600E+03	---	DCNUCU(1,1)
R016	Saturated zone (cm**3/g)	4.600E+03	4.600E+03	---	DCNUCS(1)
R016	Leach rate (/yr)	0.000E+00	0.000E+00	3.623E-05	ALEACH(1)
R016	Solubility constant	0.000E+00	0.000E+00	not used	SOLUBK(1)
R016	Distribution coefficients for Pb-210				
R016	Contaminated zone (cm**3/g)	1.000E+02	1.000E+02	---	DCNUCC(2)
R016	Unsaturated zone 1 (cm**3/g)	1.000E+02	1.000E+02	---	DCNUCU(2,1)
R016	Saturated zone (cm**3/g)	1.000E+02	1.000E+02	---	DCNUCS(2)
R016	Leach rate (/yr)	0.000E+00	0.000E+00	1.663E-03	ALEACH(2)
R016	Solubility constant	0.000E+00	0.000E+00	not used	SOLUBK(2)
R016	Distribution coefficients for Ra-226				
R016	Contaminated zone (cm**3/g)	7.000E+01	7.000E+01	---	DCNUCC(3)
R016	Unsaturated zone 1 (cm**3/g)	7.000E+01	7.000E+01	---	DCNUCU(3,1)
R016	Saturated zone (cm**3/g)	7.000E+01	7.000E+01	---	DCNUCS(3)
R016	Leach rate (/yr)	0.000E+00	0.000E+00	2.374E-03	ALEACH(3)
R016	Solubility constant	0.000E+00	0.000E+00	not used	SOLUBK(3)
R016	Distribution coefficients for Sr-90				
R016	Contaminated zone (cm**3/g)	3.000E+01	3.000E+01	---	DCNUCC(4)
R016	Unsaturated zone 1 (cm**3/g)	3.000E+01	3.000E+01	---	DCNUCU(4,1)
R016	Saturated zone (cm**3/g)	3.000E+01	3.000E+01	---	DCNUCS(4)
R016	Leach rate (/yr)	0.000E+00	0.000E+00	5.516E-03	ALEACH(4)
R016	Solubility constant	0.000E+00	0.000E+00	not used	SOLUBK(4)
R017	Inhalation rate (m**3/yr)	8.400E+03	8.400E+03	---	INHALR
R017	Mass loading for inhalation (g/m**3)	1.000E-04	1.000E-04	---	MLINH
R017	Exposure duration	3.000E+01	3.000E+01	---	ED
R017	Shielding factor, inhalation	4.000E-01	4.000E-01	---	SHF3
R017	Shielding factor, external gamma	7.000E-01	7.000E-01	---	SHF1
R017	Fraction of time spent indoors	5.000E-01	5.000E-01	---	FIND
R017	Fraction of time spent outdoors (on site)	2.500E-01	2.500E-01	---	FOTD

Site-Specific Parameter Summary (continued)

Menu	Parameter	User Input	Default	Used by RESRAD (If different from user input)	Parameter Name
R017	Shape factor flag, external gamma	1.000E+00	1.000E+00	>0 shows circular AREA.	FS
R017	Radii of shape factor array (used if FS = -1):				
R017	Outer annular radius (m), ring 1:	not used	5.000E+01	---	RAD_SHAPE(1)
R017	Outer annular radius (m), ring 2:	not used	7.071E+01	---	RAD_SHAPE(2)
R017	Outer annular radius (m), ring 3:	not used	0.000E+00	---	RAD_SHAPE(3)
R017	Outer annular radius (m), ring 4:	not used	0.000E+00	---	RAD_SHAPE(4)
R017	Outer annular radius (m), ring 5:	not used	0.000E+00	---	RAD_SHAPE(5)
R017	Outer annular radius (m), ring 6:	not used	0.000E+00	---	RAD_SHAPE(6)
R017	Outer annular radius (m), ring 7:	not used	0.000E+00	---	RAD_SHAPE(7)
R017	Outer annular radius (m), ring 8:	not used	0.000E+00	---	RAD_SHAPE(8)
R017	Outer annular radius (m), ring 9:	not used	0.000E+00	---	RAD_SHAPE(9)
R017	Outer annular radius (m), ring 10:	not used	0.000E+00	---	RAD_SHAPE(10)
R017	Outer annular radius (m), ring 11:	not used	0.000E+00	---	RAD_SHAPE(11)
R017	Outer annular radius (m), ring 12:	not used	0.000E+00	---	RAD_SHAPE(12)
R017	Fractions of annular areas within AREA:				
R017	Ring 1	not used	1.000E+00	---	FRACA(1)
R017	Ring 2	not used	2.732E-01	---	FRACA(2)
R017	Ring 3	not used	0.000E+00	---	FRACA(3)
R017	Ring 4	not used	0.000E+00	---	FRACA(4)
R017	Ring 5	not used	0.000E+00	---	FRACA(5)
R017	Ring 6	not used	0.000E+00	---	FRACA(6)
R017	Ring 7	not used	0.000E+00	---	FRACA(7)
R017	Ring 8	not used	0.000E+00	---	FRACA(8)
R017	Ring 9	not used	0.000E+00	---	FRACA(9)
R017	Ring 10	not used	0.000E+00	---	FRACA(10)
R017	Ring 11	not used	0.000E+00	---	FRACA(11)
R017	Ring 12	not used	0.000E+00	---	FRACA(12)
R018	Fruits, vegetables and grain consumption (kg/yr)	1.600E+02	1.600E+02	---	DIET(1)
R018	Leafy vegetable consumption (kg/yr)	1.400E+01	1.400E+01	---	DIET(2)
R018	Milk consumption (L/yr)	9.200E+01	9.200E+01	---	DIET(3)
R018	Meat and poultry consumption (kg/yr)	6.300E+01	6.300E+01	---	DIET(4)
R018	Fish consumption (kg/yr)	5.400E+00	5.400E+00	---	DIET(5)
R018	Other seafood consumption (kg/yr)	9.000E-01	9.000E-01	---	DIET(6)
R018	Soil ingestion rate (g/yr)	3.650E+01	3.650E+01	---	SOIL
R018	Drinking water intake (L/yr)	5.100E+02	5.100E+02	---	DWI
R018	Contamination fraction of drinking water	1.000E+00	1.000E+00	---	FDW
R018	Contamination fraction of household water	not used	1.000E+00	---	FHHW
R018	Contamination fraction of livestock water	1.000E+00	1.000E+00	---	FLW
R018	Contamination fraction of irrigation water	1.000E+00	1.000E+00	---	FIRW
R018	Contamination fraction of aquatic food	5.000E-01	5.000E-01	---	FR9
R018	Contamination fraction of plant food	-1	-1	0.290E+00	FPLANT
R018	Contamination fraction of meat	-1	-1	0.290E-01	FMEAT
R018	Contamination fraction of milk	-1	-1	0.290E-01	FMILK
R019	Livestock fodder intake for meat (kg/day)	6.800E+01	6.800E+01	---	LFI5
R019	Livestock fodder intake for milk (kg/day)	5.500E+01	5.500E+01	---	LFI6
R019	Livestock water intake for meat (L/day)	5.000E+01	5.000E+01	---	LWI5
R019	Livestock water intake for milk (L/day)	1.600E+02	1.600E+02	---	LWI6

Site-Specific Parameter Summary (continued)

Menu	Parameter	User Input	Default	Used by RESRAD (If different from user input)	Parameter Name
R019	Livestock soil intake (kg/day)	5.000E-01	5.000E-01	---	LSI
R019	Mass loading for foliar deposition (g/m**3)	1.000E-04	1.000E-04	---	MLFD
R019	Depth of soil mixing layer (m)	1.500E-01	1.500E-01	---	DM
R019	Depth of roots (m)	9.000E-01	9.000E-01	---	DROOT
R019	Drinking water fraction from ground water	1.000E+00	1.000E+00	---	FGWDW
R019	Household water fraction from ground water	not used	1.000E+00	---	FGWHH
R019	Livestock water fraction from ground water	1.000E+00	1.000E+00	---	FGWLW
R019	Irrigation fraction from ground water	1.000E+00	1.000E+00	---	FGWIR
R19B	Wet weight crop yield for Non-Leafy (kg/m**2)	7.000E-01	7.000E-01	---	YV(1)
R19B	Wet weight crop yield for Leafy (kg/m**2)	1.500E+00	1.500E+00	---	YV(2)
R19B	Wet weight crop yield for Fodder (kg/m**2)	1.100E+00	1.100E+00	---	YV(3)
R19B	Growing Season for Non-Leafy (years)	1.700E-01	1.700E-01	---	TE(1)
R19B	Growing Season for Leafy (years)	2.500E-01	2.500E-01	---	TE(2)
R19B	Growing Season for Fodder (years)	8.000E-02	8.000E-02	---	TE(3)
R19B	Translocation Factor for Non-Leafy	1.000E-01	1.000E-01	---	TIV(1)
R19B	Translocation Factor for Leafy	1.000E+00	1.000E+00	---	TIV(2)
R19B	Translocation Factor for Fodder	1.000E+00	1.000E+00	---	TIV(3)
R19B	Dry Foliar Interception Fraction for Non-Leafy	2.500E-01	2.500E-01	---	RDRY(1)
R19B	Dry Foliar Interception Fraction for Leafy	2.500E-01	2.500E-01	---	RDRY(2)
R19B	Dry Foliar Interception Fraction for Fodder	2.500E-01	2.500E-01	---	RDRY(3)
R19B	Wet Foliar Interception Fraction for Non-Leafy	2.500E-01	2.500E-01	---	RWET(1)
R19B	Wet Foliar Interception Fraction for Leafy	2.500E-01	2.500E-01	---	RWET(2)
R19B	Wet Foliar Interception Fraction for Fodder	2.500E-01	2.500E-01	---	RWET(3)
R19B	Weathering Removal Constant for Vegetation	2.000E+01	2.000E+01	---	WLAM
C14	C-12 concentration in water (g/cm**3)	not used	2.000E-05	---	C12WTR
C14	C-12 concentration in contaminated soil (g/g)	not used	3.000E-02	---	C12CZ
C14	Fraction of vegetation carbon from soil	not used	2.000E-02	---	CSOIL
C14	Fraction of vegetation carbon from air	not used	9.800E-01	---	CAIR
C14	C-14 evasion layer thickness in soil (m)	not used	3.000E-01	---	DMC
C14	C-14 evasion flux rate from soil (1/sec)	not used	7.000E-07	---	EVSN
C14	C-12 evasion flux rate from soil (1/sec)	not used	1.000E-10	---	REVSN
C14	Fraction of grain in beef cattle feed	not used	8.000E-01	---	AVFG4
C14	Fraction of grain in milk cow feed	not used	2.000E-01	---	AVFG5
STOR	Storage times of contaminated foodstuffs (days):				
STOR	Fruits, non-leafy vegetables, and grain	1.400E+01	1.400E+01	---	STOR_T(1)
STOR	Leafy vegetables	1.000E+00	1.000E+00	---	STOR_T(2)
STOR	Milk	1.000E+00	1.000E+00	---	STOR_T(3)
STOR	Meat and poultry	2.000E+01	2.000E+01	---	STOR_T(4)
STOR	Fish	7.000E+00	7.000E+00	---	STOR_T(5)
STOR	Crustacea and mollusks	7.000E+00	7.000E+00	---	STOR_T(6)
STOR	Well water	1.000E+00	1.000E+00	---	STOR_T(7)
STOR	Surface water	1.000E+00	1.000E+00	---	STOR_T(8)
STOR	Livestock fodder	4.500E+01	4.500E+01	---	STOR_T(9)
R021	Thickness of building foundation (m)	not used	1.500E-01	---	FLOOR1
R021	Bulk density of building foundation (g/cm**3)	not used	2.400E+00	---	DENSFL
R021	Total porosity of the cover material	not used	4.000E-01	---	TPCV

Site-Specific Parameter Summary (continued)

Menu	Parameter	User Input	Default	Used by RESRAD (If different from user input)	Parameter Name
R021	Total porosity of the building foundation	not used	1.000E-01	---	TPFL
R021	Volumetric water content of the cover material	not used	5.000E-02	---	PH2OCV
R021	Volumetric water content of the foundation	not used	3.000E-02	---	PH2OFL
R021	Diffusion coefficient for radon gas (m/sec):				
R021	in cover material	not used	2.000E-06	---	DIFCV
R021	in foundation material	not used	3.000E-07	---	DIFFL
R021	in contaminated zone soil	not used	2.000E-06	---	DIFCZ
R021	Radon vertical dimension of mixing (m)	not used	2.000E+00	---	HMIX
R021	Average building air exchange rate (1/hr)	not used	5.000E-01	---	REXG
R021	Height of the building (room) (m)	not used	2.500E+00	---	HRM
R021	Building interior area factor	not used	0.000E+00	---	FAI
R021	Building depth below ground surface (m)	not used	-1.000E+00	---	DMFL
R021	Emanating power of Rn-222 gas	not used	2.500E-01	---	EMANA(1)
R021	Emanating power of Rn-220 gas	not used	1.500E-01	---	EMANA(2)
TITL	Number of graphical time points	32	---	---	NPTS
TITL	Maximum number of integration points for dose	17	---	---	LYMAX
TITL	Maximum number of integration points for risk	257	---	---	KYMAX

Summary of Pathway Selections

Pathway	User Selection
1 -- external gamma	active
2 -- inhalation (w/o radon)	active
3 -- plant ingestion	active
4 -- meat ingestion	active
5 -- milk ingestion	active
6 -- aquatic foods	active
7 -- drinking water	active
8 -- soil ingestion	active
9 -- radon	suppressed
Find peak pathway doses	suppressed

Contaminated Zone Dimensions		Initial Soil Concentrations, pCi/g	
Area:	579.00 square meters	Cs-137	5.300E-02
Thickness:	2.00 meters	Pb-210	3.730E-01
Cover Depth:	0.00 meters	Ra-226	3.730E-01
		Sr-90	7.000E-02

Total Dose TDOSE(t), mrem/yr
Basic Radiation Dose Limit = 2.500E+01 mrem/yr
Total Mixture Sum M(t) = Fraction of Basic Dose Limit Received at Time (t)

t (years):	0.000E+00	1.000E+00	3.000E+00	1.000E+01	3.000E+01	1.000E+02	3.000E+02	1.000E+03
TDOSE(t):	4.898E+00	4.880E+00	4.844E+00	4.722E+00	4.407E+00	3.557E+00	2.020E+00	3.169E+00
M(t):	1.959E-01	1.952E-01	1.938E-01	1.889E-01	1.763E-01	1.423E-01	8.079E-02	1.268E-01

Maximum TDOSE(t): 4.898E+00 mrem/yr at t = 0.000E+00 years

Total Dose Contributions TDOSE(i,p,t) for Individual Radionuclides (i) and Pathways (p)
As mrem/yr and Fraction of Total Dose At t = 0.000E+00 years

Water Independent Pathways (Inhalation excludes radon)

Radio-	Ground		Inhalation		Radon		Plant		Meat		Milk		Soil	
Nuclide	mrem/yr	fract.	mrem/yr	fract.	mrem/yr	fract.	mrem/yr	fract.	mrem/yr	fract.	mrem/yr	fract.	mrem/yr	fract.
Cs-137	9.374E-02	0.0191	7.953E-08	0.0000	0.000E+00	0.0000	5.278E-03	0.0011	4.616E-04	0.0001	1.507E-04	0.0000	4.152E-05	0.0000
Pb-210	1.209E-03	0.0002	4.051E-04	0.0001	0.000E+00	0.0000	1.345E+00	0.2746	4.599E-03	0.0009	2.241E-03	0.0005	4.232E-02	0.0086
Ra-226	2.206E+00	0.4505	1.587E-04	0.0000	0.000E+00	0.0000	1.016E+00	0.2075	3.005E-03	0.0006	3.587E-03	0.0007	8.459E-03	0.0017
Sr-90	8.956E-04	0.0002	4.295E-06	0.0000	0.000E+00	0.0000	1.593E-01	0.0325	3.217E-03	0.0007	9.551E-04	0.0002	1.671E-04	0.0000
Total	2.302E+00	0.4700	5.681E-04	0.0001	0.000E+00	0.0000	2.526E+00	0.5157	1.128E-02	0.0023	6.934E-03	0.0014	5.099E-02	0.0104

Total Dose Contributions TDOSE(i,p,t) for Individual Radionuclides (i) and Pathways (p)
As mrem/yr and Fraction of Total Dose At t = 0.000E+00 years

Water Dependent Pathways

Radio-	Water		Fish		Radon		Plant		Meat		Milk		All Pathways*	
Nuclide	mrem/yr	fract.	mrem/yr	fract.	mrem/yr	fract.	mrem/yr	fract.	mrem/yr	fract.	mrem/yr	fract.	mrem/yr	fract.
Cs-137	0.000E+00	0.0000	0.000E+00	0.0000	0.000E+00	0.0000	0.000E+00	0.0000	0.000E+00	0.0000	0.000E+00	0.0000	9.967E-02	0.0203
Pb-210	0.000E+00	0.0000	0.000E+00	0.0000	0.000E+00	0.0000	0.000E+00	0.0000	0.000E+00	0.0000	0.000E+00	0.0000	1.396E+00	0.2850
Ra-226	0.000E+00	0.0000	0.000E+00	0.0000	0.000E+00	0.0000	0.000E+00	0.0000	0.000E+00	0.0000	0.000E+00	0.0000	3.238E+00	0.6611
Sr-90	0.000E+00	0.0000	0.000E+00	0.0000	0.000E+00	0.0000	0.000E+00	0.0000	0.000E+00	0.0000	0.000E+00	0.0000	1.646E-01	0.0336
Total	0.000E+00	0.0000	0.000E+00	0.0000	0.000E+00	0.0000	0.000E+00	0.0000	0.000E+00	0.0000	0.000E+00	0.0000	4.898E+00	1.0000

*Sum of all water independent and dependent pathways.

Total Dose Contributions TDOSE(i,p,t) for Individual Radionuclides (i) and Pathways (p)
As mrem/yr and Fraction of Total Dose At t = 1.000E+00 years

Water Independent Pathways (Inhalation excludes radon)

Radio-	Ground		Inhalation		Radon		Plant		Meat		Milk		Soil	
Nuclide	mrem/yr	fract.	mrem/yr	fract.	mrem/yr	fract.	mrem/yr	fract.	mrem/yr	fract.	mrem/yr	fract.	mrem/yr	fract.
Cs-137	9.159E-02	0.0188	7.771E-08	0.0000	0.000E+00	0.0000	5.158E-03	0.0011	4.510E-04	0.0001	1.473E-04	0.0000	4.057E-05	0.0000
Pb-210	1.170E-03	0.0002	3.920E-04	0.0001	0.000E+00	0.0000	1.302E+00	0.2668	4.451E-03	0.0009	2.169E-03	0.0004	4.096E-02	0.0084
Ra-226	2.200E+00	0.4508	1.706E-04	0.0000	0.000E+00	0.0000	1.055E+00	0.2162	3.145E-03	0.0006	3.648E-03	0.0007	9.728E-03	0.0020
Sr-90	8.698E-04	0.0002	4.171E-06	0.0000	0.000E+00	0.0000	1.547E-01	0.0317	3.125E-03	0.0006	9.276E-04	0.0002	1.622E-04	0.0000
Total	2.294E+00	0.4700	5.669E-04	0.0001	0.000E+00	0.0000	2.517E+00	0.5157	1.117E-02	0.0023	6.891E-03	0.0014	5.089E-02	0.0104

Total Dose Contributions TDOSE(i,p,t) for Individual Radionuclides (i) and Pathways (p)
As mrem/yr and Fraction of Total Dose At t = 1.000E+00 years

Water Dependent Pathways

Radio-	Water		Fish		Radon		Plant		Meat		Milk		All Pathways*	
Nuclide	mrem/yr	fract.	mrem/yr	fract.	mrem/yr	fract.	mrem/yr	fract.	mrem/yr	fract.	mrem/yr	fract.	mrem/yr	fract.
Cs-137	0.000E+00	0.0000	0.000E+00	0.0000	0.000E+00	0.0000	0.000E+00	0.0000	0.000E+00	0.0000	0.000E+00	0.0000	9.739E-02	0.0200
Pb-210	0.000E+00	0.0000	0.000E+00	0.0000	0.000E+00	0.0000	0.000E+00	0.0000	0.000E+00	0.0000	0.000E+00	0.0000	1.351E+00	0.2768
Ra-226	0.000E+00	0.0000	0.000E+00	0.0000	0.000E+00	0.0000	0.000E+00	0.0000	0.000E+00	0.0000	0.000E+00	0.0000	3.272E+00	0.6705
Sr-90	0.000E+00	0.0000	0.000E+00	0.0000	0.000E+00	0.0000	0.000E+00	0.0000	0.000E+00	0.0000	0.000E+00	0.0000	1.598E-01	0.0327
Total	0.000E+00	0.0000	0.000E+00	0.0000	0.000E+00	0.0000	0.000E+00	0.0000	0.000E+00	0.0000	0.000E+00	0.0000	4.880E+00	1.0000

*Sum of all water independent and dependent pathways.

Total Dose Contributions TDOSE(i,p,t) for Individual Radionuclides (i) and Pathways (p)
As mrem/yr and Fraction of Total Dose At t = 3.000E+00 years

Water Independent Pathways (Inhalation excludes radon)

Radio-	Ground		Inhalation		Radon		Plant		Meat		Milk		Soil	
Nuclide	mrem/yr	fract.	mrem/yr	fract.	mrem/yr	fract.	mrem/yr	fract.	mrem/yr	fract.	mrem/yr	fract.	mrem/yr	fract.
Cs-137	8.745E-02	0.0181	7.420E-08	0.0000	0.000E+00	0.0000	4.924E-03	0.0010	4.306E-04	0.0001	1.406E-04	0.0000	3.874E-05	0.0000
Pb-210	1.096E-03	0.0002	3.672E-04	0.0001	0.000E+00	0.0000	1.219E+00	0.2517	4.169E-03	0.0009	2.031E-03	0.0004	3.836E-02	0.0079
Ra-226	2.188E+00	0.4517	1.932E-04	0.0000	0.000E+00	0.0000	1.127E+00	0.2327	3.394E-03	0.0007	3.757E-03	0.0008	1.213E-02	0.0025
Sr-90	8.202E-04	0.0002	3.934E-06	0.0000	0.000E+00	0.0000	1.459E-01	0.0301	2.947E-03	0.0006	8.748E-04	0.0002	1.530E-04	0.0000
Total	2.277E+00	0.4701	5.643E-04	0.0001	0.000E+00	0.0000	2.498E+00	0.5156	1.094E-02	0.0023	6.804E-03	0.0014	5.068E-02	0.0105

Total Dose Contributions TDOSE(i,p,t) for Individual Radionuclides (i) and Pathways (p)
As mrem/yr and Fraction of Total Dose At t = 3.000E+00 years

Water Dependent Pathways

Radio-	Water		Fish		Radon		Plant		Meat		Milk		All Pathways*	
Nuclide	mrem/yr	fract.	mrem/yr	fract.	mrem/yr	fract.	mrem/yr	fract.	mrem/yr	fract.	mrem/yr	fract.	mrem/yr	fract.
Cs-137	0.000E+00	0.0000	0.000E+00	0.0000	0.000E+00	0.0000	0.000E+00	0.0000	0.000E+00	0.0000	0.000E+00	0.0000	9.298E-02	0.0192
Pb-210	0.000E+00	0.0000	0.000E+00	0.0000	0.000E+00	0.0000	0.000E+00	0.0000	0.000E+00	0.0000	0.000E+00	0.0000	1.265E+00	0.2612
Ra-226	0.000E+00	0.0000	0.000E+00	0.0000	0.000E+00	0.0000	0.000E+00	0.0000	0.000E+00	0.0000	0.000E+00	0.0000	3.335E+00	0.6885
Sr-90	0.000E+00	0.0000	0.000E+00	0.0000	0.000E+00	0.0000	0.000E+00	0.0000	0.000E+00	0.0000	0.000E+00	0.0000	1.507E-01	0.0311
Total	0.000E+00	0.0000	0.000E+00	0.0000	0.000E+00	0.0000	0.000E+00	0.0000	0.000E+00	0.0000	0.000E+00	0.0000	4.844E+00	1.0000

*Sum of all water independent and dependent pathways.

Total Dose Contributions TDOSE(i,p,t) for Individual Radionuclides (i) and Pathways (p)
As mrem/yr and Fraction of Total Dose At t = 1.000E+01 years

Water Independent Pathways (Inhalation excludes radon)

Radio-	Ground		Inhalation		Radon		Plant		Meat		Milk		Soil	
Nuclide	mrem/yr	fract.	mrem/yr	fract.	mrem/yr	fract.	mrem/yr	fract.	mrem/yr	fract.	mrem/yr	fract.	mrem/yr	fract.
Cs-137	7.437E-02	0.0158	6.310E-08	0.0000	0.000E+00	0.0000	4.188E-03	0.0009	3.662E-04	0.0001	1.196E-04	0.0000	3.294E-05	0.0000
Pb-210	8.714E-04	0.0002	2.920E-04	0.0001	0.000E+00	0.0000	9.696E-01	0.2054	3.315E-03	0.0007	1.615E-03	0.0003	3.050E-02	0.0065
Ra-226	2.146E+00	0.4544	2.601E-04	0.0001	0.000E+00	0.0000	1.340E+00	0.2838	4.130E-03	0.0009	4.075E-03	0.0009	1.928E-02	0.0041
Sr-90	6.680E-04	0.0001	3.204E-06	0.0000	0.000E+00	0.0000	1.188E-01	0.0252	2.400E-03	0.0005	7.124E-04	0.0002	1.246E-04	0.0000
Total	2.222E+00	0.4705	5.553E-04	0.0001	0.000E+00	0.0000	2.433E+00	0.5152	1.021E-02	0.0022	6.522E-03	0.0014	4.994E-02	0.0106

Total Dose Contributions TDOSE(i,p,t) for Individual Radionuclides (i) and Pathways (p)
As mrem/yr and Fraction of Total Dose At t = 1.000E+01 years

Water Dependent Pathways

Radio-	Water		Fish		Radon		Plant		Meat		Milk		All Pathways*	
Nuclide	mrem/yr	fract.	mrem/yr	fract.	mrem/yr	fract.	mrem/yr	fract.	mrem/yr	fract.	mrem/yr	fract.	mrem/yr	fract.
Cs-137	0.000E+00	0.0000	0.000E+00	0.0000	0.000E+00	0.0000	0.000E+00	0.0000	0.000E+00	0.0000	0.000E+00	0.0000	7.908E-02	0.0167
Pb-210	0.000E+00	0.0000	0.000E+00	0.0000	0.000E+00	0.0000	0.000E+00	0.0000	0.000E+00	0.0000	0.000E+00	0.0000	1.006E+00	0.2131
Ra-226	0.000E+00	0.0000	0.000E+00	0.0000	0.000E+00	0.0000	0.000E+00	0.0000	0.000E+00	0.0000	0.000E+00	0.0000	3.514E+00	0.7442
Sr-90	0.000E+00	0.0000	0.000E+00	0.0000	0.000E+00	0.0000	0.000E+00	0.0000	0.000E+00	0.0000	0.000E+00	0.0000	1.227E-01	0.0260
Total	0.000E+00	0.0000	0.000E+00	0.0000	0.000E+00	0.0000	0.000E+00	0.0000	0.000E+00	0.0000	0.000E+00	0.0000	4.722E+00	1.0000

*Sum of all water independent and dependent pathways.

Total Dose Contributions TDOSE(i,p,t) for Individual Radionuclides (i) and Pathways (p)
As mrem/yr and Fraction of Total Dose At t = 3.000E+01 years

Water Independent Pathways (Inhalation excludes radon)

Radio-	Ground		Inhalation		Radon		Plant		Meat		Milk		Soil	
Nuclide	mrem/yr	fract.	mrem/yr	fract.	mrem/yr	fract.	mrem/yr	fract.	mrem/yr	fract.	mrem/yr	fract.	mrem/yr	fract.
Cs-137	4.682E-02	0.0106	3.972E-08	0.0000	0.000E+00	0.0000	2.636E-03	0.0006	2.305E-04	0.0001	7.528E-05	0.0000	2.074E-05	0.0000
Pb-210	4.527E-04	0.0001	1.517E-04	0.0000	0.000E+00	0.0000	5.037E-01	0.1143	1.722E-03	0.0004	8.390E-04	0.0002	1.585E-02	0.0036
Ra-226	2.029E+00	0.4603	3.750E-04	0.0001	0.000E+00	0.0000	1.696E+00	0.3847	5.371E-03	0.0012	4.567E-03	0.0010	3.171E-02	0.0072
Sr-90	3.716E-04	0.0001	1.782E-06	0.0000	0.000E+00	0.0000	6.611E-02	0.0150	1.335E-03	0.0003	3.964E-04	0.0001	6.933E-05	0.0000
Total	2.077E+00	0.4711	5.285E-04	0.0001	0.000E+00	0.0000	2.268E+00	0.5146	8.658E-03	0.0020	5.878E-03	0.0013	4.765E-02	0.0108

Total Dose Contributions TDOSE(i,p,t) for Individual Radionuclides (i) and Pathways (p)
As mrem/yr and Fraction of Total Dose At t = 3.000E+01 years

Water Dependent Pathways

Radio-	Water		Fish		Radon		Plant		Meat		Milk		All Pathways*	
Nuclide	mrem/yr	fract.	mrem/yr	fract.	mrem/yr	fract.	mrem/yr	fract.	mrem/yr	fract.	mrem/yr	fract.	mrem/yr	fract.
Cs-137	0.000E+00	0.0000	0.000E+00	0.0000	0.000E+00	0.0000	0.000E+00	0.0000	0.000E+00	0.0000	0.000E+00	0.0000	4.978E-02	0.0113
Pb-210	0.000E+00	0.0000	0.000E+00	0.0000	0.000E+00	0.0000	0.000E+00	0.0000	0.000E+00	0.0000	0.000E+00	0.0000	5.227E-01	0.1186
Ra-226	0.000E+00	0.0000	0.000E+00	0.0000	0.000E+00	0.0000	0.000E+00	0.0000	0.000E+00	0.0000	0.000E+00	0.0000	3.767E+00	0.8546
Sr-90	0.000E+00	0.0000	0.000E+00	0.0000	0.000E+00	0.0000	0.000E+00	0.0000	0.000E+00	0.0000	0.000E+00	0.0000	6.829E-02	0.0155
Total	0.000E+00	0.0000	0.000E+00	0.0000	0.000E+00	0.0000	0.000E+00	0.0000	0.000E+00	0.0000	0.000E+00	0.0000	4.407E+00	1.0000

*Sum of all water independent and dependent pathways.

Total Dose Contributions TDOSE(i,p,t) for Individual Radionuclides (i) and Pathways (p)
As mrem/yr and Fraction of Total Dose At t = 1.000E+02 years

Water Independent Pathways (Inhalation excludes radon)

Radio-	Ground		Inhalation		Radon		Plant		Meat		Milk		Soil	
Nuclide	mrem/yr	fract.	mrem/yr	fract.	mrem/yr	fract.	mrem/yr	fract.	mrem/yr	fract.	mrem/yr	fract.	mrem/yr	fract.
Cs-137	9.266E-03	0.0026	7.862E-09	0.0000	0.000E+00	0.0000	5.218E-04	0.0001	4.563E-05	0.0000	1.490E-05	0.0000	4.104E-06	0.0000
Pb-210	4.574E-05	0.0000	1.532E-05	0.0000	0.000E+00	0.0000	5.089E-02	0.0143	1.740E-04	0.0000	8.478E-05	0.0000	1.601E-03	0.0005
Ra-226	1.667E+00	0.4687	4.215E-04	0.0001	0.000E+00	0.0000	1.770E+00	0.4976	5.701E-03	0.0016	4.380E-03	0.0012	3.791E-02	0.0107
Sr-90	4.773E-05	0.0000	2.289E-07	0.0000	0.000E+00	0.0000	8.491E-03	0.0024	1.715E-04	0.0000	5.091E-05	0.0000	8.904E-06	0.0000
Total	1.677E+00	0.4713	4.371E-04	0.0001	0.000E+00	0.0000	1.830E+00	0.5144	6.092E-03	0.0017	4.531E-03	0.0013	3.953E-02	0.0111

Total Dose Contributions TDOSE(i,p,t) for Individual Radionuclides (i) and Pathways (p)
As mrem/yr and Fraction of Total Dose At t = 1.000E+02 years

Water Dependent Pathways

Radio-	Water		Fish		Radon		Plant		Meat		Milk		All Pathways*	
Nuclide	mrem/yr	fract.	mrem/yr	fract.	mrem/yr	fract.	mrem/yr	fract.	mrem/yr	fract.	mrem/yr	fract.	mrem/yr	fract.
Cs-137	0.000E+00	0.0000	0.000E+00	0.0000	0.000E+00	0.0000	0.000E+00	0.0000	0.000E+00	0.0000	0.000E+00	0.0000	9.853E-03	0.0028
Pb-210	0.000E+00	0.0000	0.000E+00	0.0000	0.000E+00	0.0000	0.000E+00	0.0000	0.000E+00	0.0000	0.000E+00	0.0000	5.281E-02	0.0148
Ra-226	0.000E+00	0.0000	0.000E+00	0.0000	0.000E+00	0.0000	0.000E+00	0.0000	0.000E+00	0.0000	0.000E+00	0.0000	3.486E+00	0.9799
Sr-90	0.000E+00	0.0000	0.000E+00	0.0000	0.000E+00	0.0000	0.000E+00	0.0000	0.000E+00	0.0000	0.000E+00	0.0000	8.770E-03	0.0025
Total	0.000E+00	0.0000	0.000E+00	0.0000	0.000E+00	0.0000	0.000E+00	0.0000	0.000E+00	0.0000	0.000E+00	0.0000	3.557E+00	1.0000

*Sum of all water independent and dependent pathways.

Total Dose Contributions TDOSE(i,p,t) for Individual Radionuclides (i) and Pathways (p)
As mrem/yr and Fraction of Total Dose At t = 3.000E+02 years

Water Independent Pathways (Inhalation excludes radon)

Radio-	Ground		Inhalation		Radon		Plant		Meat		Milk		Soil	
Nuclide	mrem/yr	fract.	mrem/yr	fract.	mrem/yr	fract.	mrem/yr	fract.	mrem/yr	fract.	mrem/yr	fract.	mrem/yr	fract.
Cs-137	9.055E-05	0.0000	7.683E-11	0.0000	0.000E+00	0.0000	5.099E-06	0.0000	4.459E-07	0.0000	1.456E-07	0.0000	4.011E-08	0.0000
Pb-210	6.546E-08	0.0000	2.193E-08	0.0000	0.000E+00	0.0000	7.284E-05	0.0000	2.490E-07	0.0000	1.213E-07	0.0000	2.292E-06	0.0000
Ra-226	9.511E-01	0.4709	2.495E-04	0.0001	0.000E+00	0.0000	1.040E+00	0.5148	3.355E-03	0.0017	2.548E-03	0.0013	2.257E-02	0.0112
Sr-90	1.356E-07	0.0000	6.502E-10	0.0000	0.000E+00	0.0000	2.412E-05	0.0000	4.870E-07	0.0000	1.446E-07	0.0000	2.529E-08	0.0000
Total	9.512E-01	0.4709	2.495E-04	0.0001	0.000E+00	0.0000	1.040E+00	0.5148	3.356E-03	0.0017	2.549E-03	0.0013	2.257E-02	0.0112

Total Dose Contributions TDOSE(i,p,t) for Individual Radionuclides (i) and Pathways (p)
As mrem/yr and Fraction of Total Dose At t = 3.000E+02 years

Water Dependent Pathways

Radio-	Water		Fish		Radon		Plant		Meat		Milk		All Pathways*	
Nuclide	mrem/yr	fract.	mrem/yr	fract.	mrem/yr	fract.	mrem/yr	fract.	mrem/yr	fract.	mrem/yr	fract.	mrem/yr	fract.
Cs-137	0.000E+00	0.0000	0.000E+00	0.0000	0.000E+00	0.0000	0.000E+00	0.0000	0.000E+00	0.0000	0.000E+00	0.0000	9.628E-05	0.0000
Pb-210	0.000E+00	0.0000	0.000E+00	0.0000	0.000E+00	0.0000	0.000E+00	0.0000	0.000E+00	0.0000	0.000E+00	0.0000	7.559E-05	0.0000
Ra-226	0.000E+00	0.0000	0.000E+00	0.0000	0.000E+00	0.0000	0.000E+00	0.0000	0.000E+00	0.0000	0.000E+00	0.0000	2.020E+00	0.9999
Sr-90	2.432E-05	0.0000	9.500E-09	0.0000	0.000E+00	0.0000	1.167E-06	0.0000	1.212E-07	0.0000	6.618E-08	0.0000	5.059E-05	0.0000
Total	2.432E-05	0.0000	9.500E-09	0.0000	0.000E+00	0.0000	1.167E-06	0.0000	1.212E-07	0.0000	6.618E-08	0.0000	2.020E+00	1.0000

*Sum of all water independent and dependent pathways.

Total Dose Contributions TDOSE(i,p,t) for Individual Radionuclides (i) and Pathways (p)
As mrem/yr and Fraction of Total Dose At t = 1.000E+03 years

Water Independent Pathways (Inhalation excludes radon)

Radio-	Ground		Inhalation		Radon		Plant		Meat		Milk		Soil	
Nuclide	mrem/yr	fract.	mrem/yr	fract.	mrem/yr	fract.	mrem/yr	fract.	mrem/yr	fract.	mrem/yr	fract.	mrem/yr	fract.
Cs-137	8.353E-12	0.0000	7.087E-18	0.0000	0.000E+00	0.0000	4.704E-13	0.0000	4.113E-14	0.0000	1.343E-14	0.0000	3.700E-15	0.0000
Pb-210	7.262E-18	0.0000	2.433E-18	0.0000	0.000E+00	0.0000	8.080E-15	0.0000	2.762E-17	0.0000	1.346E-17	0.0000	2.542E-16	0.0000
Ra-226	1.333E-01	0.0421	3.498E-05	0.0000	0.000E+00	0.0000	1.458E-01	0.0460	4.703E-04	0.0001	3.573E-04	0.0001	3.164E-03	0.0010
Sr-90	1.655E-16	0.0000	7.939E-19	0.0000	0.000E+00	0.0000	2.945E-14	0.0000	5.947E-16	0.0000	1.765E-16	0.0000	3.088E-17	0.0000
Total	1.333E-01	0.0421	3.498E-05	0.0000	0.000E+00	0.0000	1.458E-01	0.0460	4.703E-04	0.0001	3.573E-04	0.0001	3.164E-03	0.0010

Total Dose Contributions TDOSE(i,p,t) for Individual Radionuclides (i) and Pathways (p)
As mrem/yr and Fraction of Total Dose At t = 1.000E+03 years

Water Dependent Pathways

Radio-	Water		Fish		Radon		Plant		Meat		Milk		All Pathways*	
Nuclide	mrem/yr	fract.	mrem/yr	fract.	mrem/yr	fract.	mrem/yr	fract.	mrem/yr	fract.	mrem/yr	fract.	mrem/yr	fract.
Cs-137	0.000E+00	0.0000	0.000E+00	0.0000	0.000E+00	0.0000	0.000E+00	0.0000	0.000E+00	0.0000	0.000E+00	0.0000	8.882E-12	0.0000
Pb-210	5.501E-14	0.0000	8.877E-17	0.0000	0.000E+00	0.0000	2.455E-15	0.0000	2.728E-17	0.0000	2.239E-17	0.0000	6.599E-14	0.0000
Ra-226	2.756E+00	0.8696	3.797E-03	0.0012	0.000E+00	0.0000	1.232E-01	0.0389	1.440E-03	0.0005	1.660E-03	0.0005	3.169E+00	1.0000
Sr-90	1.123E-13	0.0000	4.386E-17	0.0000	0.000E+00	0.0000	5.389E-15	0.0000	5.607E-16	0.0000	3.057E-16	0.0000	1.490E-13	0.0000
Total	2.756E+00	0.8696	3.797E-03	0.0012	0.000E+00	0.0000	1.232E-01	0.0389	1.440E-03	0.0005	1.660E-03	0.0005	3.169E+00	1.0000

*Sum of all water independent and dependent pathways.

Dose/Source Ratios Summed Over All Pathways
Parent and Progeny Principal Radionuclide Contributions Indicated

Parent (i)	Product (j)	Thread Fraction	DSR(j,t) At Time in Years (mrem/yr)/(pCi/g) 0.000E+00	1.000E+00	3.000E+00	1.000E+01	3.000E+01	1.000E+02	3.000E+02	1.000E+03
Cs-137+D	Cs-137+D	1.000E+00	1.881E+00	1.838E+00	1.754E+00	1.492E+00	9.393E-01	1.859E-01	1.817E-03	1.676E-10
Pb-210+D	Pb-210+D	1.000E+00	3.743E+00	3.622E+00	3.392E+00	2.698E+00	1.401E+00	1.416E-01	2.027E-04	1.769E-13
Ra-226+D	Ra-226+D	1.000E+00	8.612E+00	8.588E+00	8.540E+00	8.374E+00	7.916E+00	6.504E+00	3.710E+00	2.109E+00
Ra-226+D	Pb-210+D	1.000E+00	6.891E-02	1.848E-01	4.011E-01	1.046E+00	2.182E+00	2.841E+00	1.704E+00	6.388E+00
Ra-226+D	∑DSR(j)		8.681E+00	8.773E+00	8.941E+00	9.420E+00	1.010E+01	9.345E+00	5.414E+00	8.496E+00
Sr-90+D	Sr-90+D	1.000E+00	2.351E+00	2.283E+00	2.153E+00	1.753E+00	9.755E-01	1.253E-01	7.227E-04	2.128E-12

The DSR includes contributions from associated (half-life ≤ 180 days) daughters.

Single Radionuclide Soil Guidelines G(i,t) in pCi/g
Basic Radiation Dose Limit = 2.500E+01 mrem/yr

Nuclide (i)	t= 0.000E+00	1.000E+00	3.000E+00	1.000E+01	3.000E+01	1.000E+02	3.000E+02	1.000E+03
Cs-137	1.329E+01	1.361E+01	1.425E+01	1.676E+01	2.662E+01	1.345E+02	1.376E+04	1.492E+11
Pb-210	6.680E+00	6.902E+00	7.369E+00	9.268E+00	1.784E+01	1.766E+02	1.234E+05	*7.634E+13
Ra-226	2.880E+00	2.850E+00	2.796E+00	2.654E+00	2.476E+00	2.675E+00	4.617E+00	2.943E+00
Sr-90	1.063E+01	1.095E+01	1.161E+01	1.426E+01	2.563E+01	1.995E+02	3.459E+04	1.175E+13

*At specific activity limit

Summed Dose/Source Ratios DSR(i,t) in (mrem/yr)/(pCi/g)
and Single Radionuclide Soil Guidelines G(i,t) in pCi/g
at tmin = time of minimum single radionuclide soil guideline
and at tmax = time of maximum total dose = 0.000E+00 years

Nuclide (i)	Initial (pCi/g)	tmin (years)	DSR(i,tmin)	G(i,tmin) (pCi/g)	DSR(i,tmax)	G(i,tmax) (pCi/g)
Cs-137	5.300E-02	0.000E+00	1.881E+00	1.329E+01	1.881E+00	1.329E+01
Pb-210	3.730E-01	0.000E+00	3.743E+00	6.680E+00	3.743E+00	6.680E+00
Ra-226	3.730E-01	42.85 ± 0.09	1.019E+01	2.454E+00	8.681E+00	2.880E+00
Sr-90	7.000E-02	0.000E+00	2.351E+00	1.063E+01	2.351E+00	1.063E+01

Individual Nuclide Dose Summed Over All Pathways
Parent Nuclide and Branch Fraction Indicated

Nuclide (j)	Parent (i)	THF(i)	DOSE(j,t), mrem/yr t= 0.000E+00	1.000E+00	3.000E+00	1.000E+01	3.000E+01	1.000E+02	3.000E+02	1.000E+03
Cs-137	Cs-137	1.000E+00	9.967E-02	9.739E-02	9.298E-02	7.908E-02	4.978E-02	9.853E-03	9.628E-05	8.882E-12
Pb-210	Pb-210	1.000E+00	1.396E+00	1.351E+00	1.265E+00	1.006E+00	5.227E-01	5.281E-02	7.559E-05	6.599E-14
Pb-210	Ra-226	1.000E+00	2.570E-02	6.893E-02	1.496E-01	3.903E-01	8.139E-01	1.060E+00	6.357E-01	2.383E+00
Pb-210	∑DOSE(j)		1.422E+00	1.420E+00	1.415E+00	1.396E+00	1.337E+00	1.113E+00	6.358E-01	2.383E+00
Ra-226	Ra-226	1.000E+00	3.212E+00	3.203E+00	3.185E+00	3.123E+00	2.953E+00	2.426E+00	1.384E+00	7.865E-01
Sr-90	Sr-90	1.000E+00	1.646E-01	1.598E-01	1.507E-01	1.227E-01	6.829E-02	8.770E-03	5.059E-05	1.490E-13

THF(i) is the thread fraction of the parent nuclide.

Individual Nuclide Soil Concentration
Parent Nuclide and Branch Fraction Indicated

Nuclide (j)	Parent (i)	THF(i)	S(j,t), pCi/g t= 0.000E+00	1.000E+00	3.000E+00	1.000E+01	3.000E+01	1.000E+02	3.000E+02	1.000E+03
Cs-137	Cs-137	1.000E+00	5.300E-02	5.179E-02	4.945E-02	4.205E-02	2.647E-02	5.239E-03	5.120E-05	4.723E-12
Pb-210	Pb-210	1.000E+00	3.730E-01	3.610E-01	3.381E-01	2.688E-01	1.397E-01	1.411E-02	2.020E-05	2.240E-15
Pb-210	Ra-226	1.000E+00	0.000E+00	1.139E-02	3.299E-02	9.742E-02	2.110E-01	2.778E-01	1.668E-01	2.339E-02
Pb-210	∑S(j):		3.730E-01	3.724E-01	3.711E-01	3.663E-01	3.506E-01	2.919E-01	1.668E-01	2.339E-02
Ra-226	Ra-226	1.000E+00	3.730E-01	3.720E-01	3.699E-01	3.627E-01	3.429E-01	2.817E-01	1.607E-01	2.253E-02
Sr-90	Sr-90	1.000E+00	7.000E-02	6.798E-02	6.411E-02	5.221E-02	2.905E-02	3.731E-03	1.060E-05	1.294E-14

THF(i) is the thread fraction of the parent nuclide.

RESCALC.EXE execution time = 3.50 seconds

Table of Contents

Part III: Intake Quantities and Health Risk Factors

Cancer Risk Slope Factors 2
Risk Slope and ETFG for the Ground Pathway 3
Amount of Intake Quantities and Excess Cancer Risks
Time= 0.000E+00 4
Time= 1.000E+00 7
Time= 3.000E+00 10
Time= 1.000E+01 13
Time= 3.000E+01 16
Time= 1.000E+02 19
Time= 3.000E+02 22
Time= 1.000E+03 25

Cancer Risk Slope Factors Summary Table

Risk Library: FGR 13 Morbidity

Menu	Parameter	Current Value	Base Case*	Parameter Name
Sf-1	Ground external radiation slope factors, 1/yr per (pCi/g):			
Sf-1	Cs-137+D	2.55E-06	5.32E-10	SLPF(1,1)
Sf-1	Pb-210+D	4.21E-09	1.41E-09	SLPF(2,1)
Sf-1	Ra-226+D	8.49E-06	2.29E-08	SLPF(3,1)
Sf-1	Sr-90+D	1.96E-08	4.82E-10	SLPF(4,1)
Sf-2	Inhalation, slope factors, 1/(pCi):			
Sf-2	Cs-137+D	1.12E-10	1.12E-10	SLPF(1,2)
Sf-2	Pb-210+D	3.08E-08	1.58E-08	SLPF(2,2)
Sf-2	Ra-226+D	2.83E-08	2.82E-08	SLPF(3,2)
Sf-2	Sr-90+D	4.33E-10	4.25E-10	SLPF(4,2)
Sf-3	Food ingestion, slope factors, 1/(pCi):			
Sf-3	Cs-137+D	3.74E-11	3.74E-11	SLPF(1,3)
Sf-3	Pb-210+D	3.44E-09	1.18E-09	SLPF(2,3)
Sf-3	Ra-226+D	5.15E-10	5.14E-10	SLPF(3,3)
Sf-3	Sr-90+D	9.53E-11	6.88E-11	SLPF(4,3)
Sf-3	Water ingestion, slope factors, 1/(pCi):			
Sf-3	Cs-137+D	3.04E-11	3.04E-11	SLPF(1,4)
Sf-3	Pb-210+D	2.66E-09	8.81E-10	SLPF(2,4)
Sf-3	Ra-226+D	3.86E-10	3.85E-10	SLPF(3,4)
Sf-3	Sr-90+D	7.40E-11	5.59E-11	SLPF(4,4)
Sf-3	Soil ingestion, slope factors, 1/(pCi):			
Sf-3	Cs-137+D	3.74E-11	3.74E-11	SLPF(1,5)
Sf-3	Pb-210+D	3.44E-09	1.18E-09	SLPF(2,5)
Sf-3	Ra-226+D	5.15E-10	5.14E-10	SLPF(3,5)
Sf-3	Sr-90+D	9.53E-11	6.88E-11	SLPF(4,5)
Sf-Rn	Radon Inhalation slope factors, 1/(pCi):			
Sf-Rn	Rn-222	1.80E-12	1.80E-12	SLPFRN(1,1)
Sf-Rn	Po-218	3.70E-12	3.70E-12	SLPFRN(1,2)
Sf-Rn	Pb-214	6.20E-12	6.20E-12	SLPFRN(1,3)
Sf-Rn	Bi-214	1.50E-11	1.50E-11	SLPFRN(1,4)
Sf-Rn	Radon K factors, (mrem/WLM):			
Sf-Rn	Rn-222 Indoor	7.60E+02	7.60E+02	KFACTR(1,1)
Sf-Rn	Rn-222 Outdoor	5.70E+02	5.70E+02	KFACTR(1,2)

*Base Case means Default.Lib w/o Associate Nuclide contributions.

Risk Slope and Environmental Transport Factors for the Ground Pathway

Nuclide (i)	Slope(i)* t= 0.000E+00	ETFG(i,t) At Time in Years (dimensionless) 1.000E+00	3.000E+00	1.000E+01	3.000E+01	1.000E+02	3.000E+02	1.000E+03
At-218	3.570E-09	5.450E-01	5.450E-01	5.450E-01	5.450E-01	5.450E-01	5.450E-01	5.450E-01
Ba-137m	2.690E-06	5.244E-01	5.244E-01	5.244E-01	5.244E-01	5.244E-01	5.244E-01	5.244E-01
Bi-210	2.760E-09	5.347E-01	5.347E-01	5.347E-01	5.347E-01	5.347E-01	5.347E-01	5.347E-01
Bi-214	7.480E-06	5.290E-01	5.290E-01	5.290E-01	5.290E-01	5.290E-01	5.290E-01	5.290E-01
Cs-137	5.320E-10	5.417E-01	5.417E-01	5.417E-01	5.417E-01	5.417E-01	5.417E-01	5.417E-01
Pb-210	1.410E-09	5.471E-01	5.471E-01	5.471E-01	5.471E-01	5.471E-01	5.471E-01	5.471E-01
Pb-214	9.820E-07	5.345E-01	5.345E-01	5.345E-01	5.345E-01	5.345E-01	5.345E-01	5.345E-01
Po-210	3.950E-11	5.270E-01	5.270E-01	5.270E-01	5.270E-01	5.270E-01	5.270E-01	5.270E-01
Po-214	3.860E-10	5.244E-01	5.244E-01	5.244E-01	5.244E-01	5.244E-01	5.244E-01	5.244E-01
Po-218	4.260E-11	5.270E-01	5.270E-01	5.270E-01	5.270E-01	5.270E-01	5.270E-01	5.270E-01
Ra-226	2.290E-08	5.443E-01	5.443E-01	5.443E-01	5.443E-01	5.443E-01	5.443E-01	5.443E-01
Rn-222	1.740E-09	5.255E-01	5.255E-01	5.255E-01	5.255E-01	5.255E-01	5.255E-01	5.255E-01
Sr-90	4.820E-10	5.441E-01	5.441E-01	5.441E-01	5.441E-01	5.441E-01	5.441E-01	5.441E-01
Tl-210	0.000E+00	6.000E-01	6.000E-01	6.000E-01	6.000E-01	6.000E-01	6.000E-01	6.000E-01
Y-90	1.910E-08	5.270E-01	5.270E-01	5.270E-01	5.270E-01	5.270E-01	5.270E-01	5.270E-01

* - Units are 1/yr per (pCi/g) at infinite depth and area. Multiplication by ETFG(i,t) converts to site conditions.

Amount of Intake Quantities QINT(i,p,t) for Individual Radionuclides (i) and Pathways (p)
As pCi/yr at t= 0.000E+00 years

Radio-	Water Independent Pathways (Inhalation w/o radon)					Water Dependent Pathways					
Nuclide	Inhalation	Plant	Meat	Milk	Soil	Water	Fish	Plant	Meat	Milk	Ingestion*
Cs-137	2.522E-03	1.068E+02	9.338E+00	3.049E+00	8.401E-01	0.000E+00	0.000E+00	0.000E+00	0.000E+00	0.000E+00	1.200E+02
Pb-210	1.775E-02	1.879E+02	6.423E-01	3.130E-01	5.912E+00	0.000E+00	0.000E+00	0.000E+00	0.000E+00	0.000E+00	1.948E+02
Ra-226	1.775E-02	7.516E+02	2.191E+00	2.683E+00	5.912E+00	0.000E+00	0.000E+00	0.000E+00	0.000E+00	0.000E+00	7.624E+02
Sr-90	3.331E-03	1.058E+03	2.135E+01	6.339E+00	1.110E+00	0.000E+00	0.000E+00	0.000E+00	0.000E+00	0.000E+00	1.087E+03

* Sum of all ingestion pathways, i.e. water independent plant, meat, milk, soil
and water-dependent water, fish, plant, meat, milk pathways

Amount of Intake Quantities QINT9(irn,i,t) and QINT9W(irn,i,t) for Inhalation of
Radon and its Decay Products as pCi/yr at t= 0.000E+00 years

Radon	Radionuclides							
Pathway	Rn-222	Po-218	Pb-214	Bi-214	Rn-220	Po-216	Pb-212	Bi-212
Water-ind.	0.000E+00	0.000E+00	0.000E+00	0.000E+00	0.000E+00	0.000E+00	0.000E+00	0.000E+00
Water-dep.	0.000E+00	0.000E+00	0.000E+00	0.000E+00	0.000E+00	0.000E+00	0.000E+00	0.000E+00
Total	0.000E+00	0.000E+00	0.000E+00	0.000E+00	0.000E+00	0.000E+00	0.000E+00	0.000E+00

Water-ind. == Water-independent Water-dep. == Water-dependent

Excess Cancer Risks CNRS(i,p,t) for Individual Radionuclides (i) and Pathways (p)
and Fraction of Total Risk at t= 0.000E+00 years

Water Independent Pathways (Inhalation excludes radon)

Radio-	Ground		Inhalation		Plant		Meat		Milk		Soil	
Nuclide	risk	fract.	risk	fract.	risk	fract.	risk	fract.	risk	fract.	risk	fract.
Cs-137	1.530E-06	0.0185	6.110E-12	0.0000	8.639E-08	0.0010	7.555E-09	0.0001	2.467E-09	0.0000	6.796E-10	0.0000
Pb-210	2.465E-08	0.0003	1.591E-08	0.0002	1.891E-05	0.2281	6.508E-08	0.0008	3.160E-08	0.0004	5.932E-07	0.0072
Ra-226	4.824E-05	0.5819	1.444E-08	0.0002	1.113E-05	0.1343	3.246E-08	0.0004	3.974E-08	0.0005	8.756E-08	0.0011
Sr-90	1.443E-08	0.0002	2.881E-11	0.0000	2.012E-06	0.0243	4.063E-08	0.0005	1.206E-08	0.0001	2.110E-09	0.0000
Total	4.981E-05	0.6009	3.038E-08	0.0004	3.214E-05	0.3877	1.457E-07	0.0018	8.586E-08	0.0010	6.835E-07	0.0082

Intrisk : RESRAD Default Parameters
File : C:\RESRAD_FAMILY\RESRAD\6.5\USERFILES\PARCEL G SURVEY UNIT 119 BACKFILL MDA.RAD

Excess Cancer Risks CNRS(i,p,t) for Individual Radionuclides (i) and Pathways (p)
and Fraction of Total Risk at t= 0.000E+00 years

Water Dependent Pathways

Radio-	Water		Fish		Plant		Meat		Milk		All Pathways**	
Nuclide	risk	fract.	risk	fract.	risk	fract.	risk	fract.	risk	fract.	risk	fract.
Cs-137	0.000E+00	0.0000	0.000E+00	0.0000	0.000E+00	0.0000	0.000E+00	0.0000	0.000E+00	0.0000	1.627E-06	0.0196
Pb-210	0.000E+00	0.0000	0.000E+00	0.0000	0.000E+00	0.0000	0.000E+00	0.0000	0.000E+00	0.0000	1.964E-05	0.2369
Ra-226	0.000E+00	0.0000	0.000E+00	0.0000	0.000E+00	0.0000	0.000E+00	0.0000	0.000E+00	0.0000	5.955E-05	0.7183
Sr-90	0.000E+00	0.0000	0.000E+00	0.0000	0.000E+00	0.0000	0.000E+00	0.0000	0.000E+00	0.0000	2.081E-06	0.0251
Total	0.000E+00	0.0000	0.000E+00	0.0000	0.000E+00	0.0000	0.000E+00	0.0000	0.000E+00	0.0000	8.290E-05	1.0000

** Sum of water independent ground, inhalation, plant, meat, milk, soil
and water dependent water, fish, plant, meat, milk pathways

Excess Cancer Risks CNRS9(irn,i,t) and CNRS9W(irn,i,t) for Inhalation of
Radon and its Decay Products at t= 0.000E+00 years

Radon	Radionuclides							
Pathway	Rn-222	Po-218	Pb-214	Bi-214	Rn-220	Po-216	Pb-212	Bi-212
Water-ind.	0.000E+00	0.000E+00	0.000E+00	0.000E+00	0.000E+00	0.000E+00	0.000E+00	0.000E+00
Water-dep.	0.000E+00	0.000E+00	0.000E+00	0.000E+00	0.000E+00	0.000E+00	0.000E+00	0.000E+00
Total	0.000E+00	0.000E+00	0.000E+00	0.000E+00	0.000E+00	0.000E+00	0.000E+00	0.000E+00

Water-ind. == Water-independent Water-dep. == Water-dependent

Total Excess Cancer Risk CNRS(i,p,t)*** for Initially Existent Radionuclides (i) and Pathways (p)
and Fraction of Total Risk at t= 0.000E+00 years

Water Independent Pathways (Inhalation excludes radon)

Radio-	Ground		Inhalation		Radon		Plant		Meat		Milk		Soil	
Nuclide	risk	fract.	risk	fract.	risk	fract.	risk	fract.	risk	fract.	risk	fract.	risk	fract.
Cs-137	1.530E-06	0.0185	6.110E-12	0.0000	0.000E+00	0.0000	8.639E-08	0.0010	7.555E-09	0.0001	2.467E-09	0.0000	6.796E-10	0.0000
Pb-210	1.616E-08	0.0002	1.043E-08	0.0001	0.000E+00	0.0000	1.236E-05	0.1491	4.226E-08	0.0005	2.059E-08	0.0002	3.889E-07	0.0047
Ra-226	4.825E-05	0.5820	1.992E-08	0.0002	0.000E+00	0.0000	1.768E-05	0.2133	5.528E-08	0.0007	5.074E-08	0.0006	2.919E-07	0.0035
Sr-90	1.443E-08	0.0002	2.881E-11	0.0000	0.000E+00	0.0000	2.012E-06	0.0243	4.063E-08	0.0005	1.206E-08	0.0001	2.110E-09	0.0000
Total	4.981E-05	0.6009	3.038E-08	0.0004	0.000E+00	0.0000	3.214E-05	0.3877	1.457E-07	0.0018	8.586E-08	0.0010	6.835E-07	0.0082

Total Excess Cancer Risk CNRS(i,p,t)*** for Initially Existent Radionuclides (i) and Pathways (p)
and Fraction of Total Risk at t= 0.000E+00 years

Water Dependent Pathways

Radio-	Water		Fish		Radon		Plant		Meat		Milk		All pathways	
Nuclide	risk	fract.	risk	fract.	risk	fract.	risk	fract.	risk	fract.	risk	fract.	risk	fract.
Cs-137	0.000E+00	0.0000	0.000E+00	0.0000	0.000E+00	0.0000	0.000E+00	0.0000	0.000E+00	0.0000	0.000E+00	0.0000	1.627E-06	0.0196
Pb-210	0.000E+00	0.0000	0.000E+00	0.0000	0.000E+00	0.0000	0.000E+00	0.0000	0.000E+00	0.0000	0.000E+00	0.0000	1.284E-05	0.1549
Ra-226	0.000E+00	0.0000	0.000E+00	0.0000	0.000E+00	0.0000	0.000E+00	0.0000	0.000E+00	0.0000	0.000E+00	0.0000	6.635E-05	0.8004
Sr-90	0.000E+00	0.0000	0.000E+00	0.0000	0.000E+00	0.0000	0.000E+00	0.0000	0.000E+00	0.0000	0.000E+00	0.0000	2.081E-06	0.0251
Total	0.000E+00	0.0000	0.000E+00	0.0000	0.000E+00	0.0000	0.000E+00	0.0000	0.000E+00	0.0000	0.000E+00	0.0000	8.290E-05	1.0000

***CNRSI(i,p,t) includes contribution from decay daughter radionuclides

Amount of Intake Quantities QINT(i,p,t) for Individual Radionuclides (i) and Pathways (p)
As pCi/yr at t= 1.000E+00 years

Radio-	Water Independent Pathways (Inhalation w/o radon)					Water Dependent Pathways					
Nuclide	Inhalation	Plant	Meat	Milk	Soil	Water	Fish	Plant	Meat	Milk	Ingestion*
Cs-137	2.464E-03	1.044E+02	9.125E+00	2.980E+00	8.208E-01	0.000E+00	0.000E+00	0.000E+00	0.000E+00	0.000E+00	1.173E+02
Pb-210	1.772E-02	1.882E+02	6.482E-01	3.146E-01	5.902E+00	0.000E+00	0.000E+00	0.000E+00	0.000E+00	0.000E+00	1.951E+02
Ra-226	1.770E-02	7.495E+02	2.185E+00	2.676E+00	5.896E+00	0.000E+00	0.000E+00	0.000E+00	0.000E+00	0.000E+00	7.603E+02
Sr-90	3.235E-03	1.027E+03	2.075E+01	6.160E+00	1.077E+00	0.000E+00	0.000E+00	0.000E+00	0.000E+00	0.000E+00	1.055E+03

* Sum of all ingestion pathways, i.e. water independent plant, meat, milk, soil
and water-dependent water, fish, plant, meat, milk pathways

Amount of Intake Quantities QINT9(irn,i,t) and QINT9W(irn,i,t) for Inhalation of
Radon and its Decay Products as pCi/yr at t= 1.000E+00 years

Radon	Radionuclides							
Pathway	Rn-222	Po-218	Pb-214	Bi-214	Rn-220	Po-216	Pb-212	Bi-212
Water-ind.	0.000E+00	0.000E+00	0.000E+00	0.000E+00	0.000E+00	0.000E+00	0.000E+00	0.000E+00
Water-dep.	0.000E+00	0.000E+00	0.000E+00	0.000E+00	0.000E+00	0.000E+00	0.000E+00	0.000E+00
Total	0.000E+00	0.000E+00	0.000E+00	0.000E+00	0.000E+00	0.000E+00	0.000E+00	0.000E+00

Water-ind. == Water-independent Water-dep. == Water-dependent

Excess Cancer Risks CNRS(i,p,t) for Individual Radionuclides (i) and Pathways (p)
and Fraction of Total Risk at t= 1.000E+00 years

Water Independent Pathways (Inhalation excludes radon)

Radio-	Ground		Inhalation		Plant		Meat		Milk		Soil	
Nuclide	risk	fract.	risk	fract.	risk	fract.	risk	fract.	risk	fract.	risk	fract.
Cs-137	1.495E-06	0.0181	5.970E-12	0.0000	8.442E-08	0.0010	7.382E-09	0.0001	2.410E-09	0.0000	6.640E-10	0.0000
Pb-210	2.460E-08	0.0003	1.588E-08	0.0002	1.888E-05	0.2285	6.501E-08	0.0008	3.155E-08	0.0004	5.919E-07	0.0072
Ra-226	4.810E-05	0.5824	1.440E-08	0.0002	1.110E-05	0.1344	3.237E-08	0.0004	3.963E-08	0.0005	8.731E-08	0.0011
Sr-90	1.401E-08	0.0002	2.798E-11	0.0000	1.954E-06	0.0237	3.946E-08	0.0005	1.171E-08	0.0001	2.049E-09	0.0000
Total	4.964E-05	0.6010	3.031E-08	0.0004	3.202E-05	0.3876	1.442E-07	0.0017	8.530E-08	0.0010	6.820E-07	0.0083

Excess Cancer Risks CNRS(i,p,t) for Individual Radionuclides (i) and Pathways (p)
and Fraction of Total Risk at t= 1.000E+00 years

Water Dependent Pathways

Radio-	Water		Fish		Plant		Meat		Milk		All Pathways**	
Nuclide	risk	fract.	risk	fract.	risk	fract.	risk	fract.	risk	fract.	risk	fract.
Cs-137	0.000E+00	0.0000	0.000E+00	0.0000	0.000E+00	0.0000	0.000E+00	0.0000	0.000E+00	0.0000	1.590E-06	0.0192
Pb-210	0.000E+00	0.0000	0.000E+00	0.0000	0.000E+00	0.0000	0.000E+00	0.0000	0.000E+00	0.0000	1.961E-05	0.2374
Ra-226	0.000E+00	0.0000	0.000E+00	0.0000	0.000E+00	0.0000	0.000E+00	0.0000	0.000E+00	0.0000	5.938E-05	0.7189
Sr-90	0.000E+00	0.0000	0.000E+00	0.0000	0.000E+00	0.0000	0.000E+00	0.0000	0.000E+00	0.0000	2.021E-06	0.0245
Total	0.000E+00	0.0000	0.000E+00	0.0000	0.000E+00	0.0000	0.000E+00	0.0000	0.000E+00	0.0000	8.260E-05	1.0000

** Sum of water independent ground, inhalation, plant, meat, milk, soil
and water dependent water, fish, plant, meat, milk pathways

Excess Cancer Risks CNRS9(irn,i,t) and CNRS9W(irn,i,t) for Inhalation of
Radon and its Decay Products at t= 1.000E+00 years

Radon	Radionuclides							
Pathway	Rn-222	Po-218	Pb-214	Bi-214	Rn-220	Po-216	Pb-212	Bi-212
Water-ind.	0.000E+00	0.000E+00	0.000E+00	0.000E+00	0.000E+00	0.000E+00	0.000E+00	0.000E+00
Water-dep.	0.000E+00	0.000E+00	0.000E+00	0.000E+00	0.000E+00	0.000E+00	0.000E+00	0.000E+00
Total	0.000E+00	0.000E+00	0.000E+00	0.000E+00	0.000E+00	0.000E+00	0.000E+00	0.000E+00

Water-ind. == Water-independent Water-dep. == Water-dependent

Total Excess Cancer Risk CNRS(i,p,t)*** for Initially Existent Radionuclides (i) and Pathways (p)
and Fraction of Total Risk at t= 1.000E+00 years

Water Independent Pathways (Inhalation excludes radon)

Radio-	Ground		Inhalation		Radon		Plant		Meat		Milk		Soil	
Nuclide	risk	fract.	risk	fract.	risk	fract.	risk	fract.	risk	fract.	risk	fract.	risk	fract.
Cs-137	1.495E-06	0.0181	5.970E-12	0.0000	0.000E+00	0.0000	8.442E-08	0.0010	7.382E-09	0.0001	2.410E-09	0.0000	6.640E-10	0.0000
Pb-210	1.564E-08	0.0002	1.009E-08	0.0001	0.000E+00	0.0000	1.196E-05	0.1448	4.090E-08	0.0005	1.993E-08	0.0002	3.763E-07	0.0046
Ra-226	4.811E-05	0.5825	2.018E-08	0.0002	0.000E+00	0.0000	1.802E-05	0.2181	5.647E-08	0.0007	5.125E-08	0.0006	3.029E-07	0.0037
Sr-90	1.401E-08	0.0002	2.798E-11	0.0000	0.000E+00	0.0000	1.954E-06	0.0237	3.946E-08	0.0005	1.171E-08	0.0001	2.049E-09	0.0000
Total	4.964E-05	0.6010	3.031E-08	0.0004	0.000E+00	0.0000	3.202E-05	0.3876	1.442E-07	0.0017	8.530E-08	0.0010	6.820E-07	0.0083

Intrisk : RESRAD Default Parameters
File : C:\RESRAD_FAMILY\RESRAD\6.5\USERFILES\PARCEL G SURVEY UNIT 119 BACKFILL MDA.RAD

Total Excess Cancer Risk CNRS(i,p,t)*** for Initially Existent Radionuclides (i) and Pathways (p)
and Fraction of Total Risk at t= 1.000E+00 years

Water Dependent Pathways

Radio-	Water		Fish		Radon		Plant		Meat		Milk		All pathways	
Nuclide	risk	fract.	risk	fract.	risk	fract.	risk	fract.	risk	fract.	risk	fract.	risk	fract.
Cs-137	0.000E+00	0.0000	0.000E+00	0.0000	0.000E+00	0.0000	0.000E+00	0.0000	0.000E+00	0.0000	0.000E+00	0.0000	1.590E-06	0.0192
Pb-210	0.000E+00	0.0000	0.000E+00	0.0000	0.000E+00	0.0000	0.000E+00	0.0000	0.000E+00	0.0000	0.000E+00	0.0000	1.243E-05	0.1504
Ra-226	0.000E+00	0.0000	0.000E+00	0.0000	0.000E+00	0.0000	0.000E+00	0.0000	0.000E+00	0.0000	0.000E+00	0.0000	6.656E-05	0.8058
Sr-90	0.000E+00	0.0000	0.000E+00	0.0000	0.000E+00	0.0000	0.000E+00	0.0000	0.000E+00	0.0000	0.000E+00	0.0000	2.021E-06	0.0245
Total	0.000E+00	0.0000	0.000E+00	0.0000	0.000E+00	0.0000	0.000E+00	0.0000	0.000E+00	0.0000	0.000E+00	0.0000	8.260E-05	1.0000

***CNRSI(i,p,t) includes contribution from decay daughter radionuclides

Amount of Intake Quantities QINT(i,p,t) for Individual Radionuclides (i) and Pathways (p)
As pCi/yr at t= 3.000E+00 years

Radio-	Water Independent Pathways (Inhalation w/o radon)					Water Dependent Pathways					
Nuclide	Inhalation	Plant	Meat	Milk	Soil	Water	Fish	Plant	Meat	Milk	Ingestion*
Cs-137	2.353E-03	9.963E+01	8.712E+00	2.845E+00	7.837E-01	0.000E+00	0.000E+00	0.000E+00	0.000E+00	0.000E+00	1.120E+02
Pb-210	1.766E-02	1.876E+02	6.460E-01	3.135E-01	5.882E+00	0.000E+00	0.000E+00	0.000E+00	0.000E+00	0.000E+00	1.944E+02
Ra-226	1.760E-02	7.453E+02	2.173E+00	2.661E+00	5.863E+00	0.000E+00	0.000E+00	0.000E+00	0.000E+00	0.000E+00	7.560E+02
Sr-90	3.051E-03	9.690E+02	1.957E+01	5.809E+00	1.016E+00	0.000E+00	0.000E+00	0.000E+00	0.000E+00	0.000E+00	9.953E+02

* Sum of all ingestion pathways, i.e. water independent plant, meat, milk, soil
and water-dependent water, fish, plant, meat, milk pathways

Amount of Intake Quantities QINT9(irn,i,t) and QINT9W(irn,i,t) for Inhalation of
Radon and its Decay Products as pCi/yr at t= 3.000E+00 years

Radon	Radionuclides							
Pathway	Rn-222	Po-218	Pb-214	Bi-214	Rn-220	Po-216	Pb-212	Bi-212
Water-ind.	0.000E+00	0.000E+00	0.000E+00	0.000E+00	0.000E+00	0.000E+00	0.000E+00	0.000E+00
Water-dep.	0.000E+00	0.000E+00	0.000E+00	0.000E+00	0.000E+00	0.000E+00	0.000E+00	0.000E+00
Total	0.000E+00	0.000E+00	0.000E+00	0.000E+00	0.000E+00	0.000E+00	0.000E+00	0.000E+00

Water-ind. == Water-independent Water-dep. == Water-dependent

Excess Cancer Risks CNRS(i,p,t) for Individual Radionuclides (i) and Pathways (p)
and Fraction of Total Risk at t= 3.000E+00 years

Water Independent Pathways (Inhalation excludes radon)

Radio-	Ground		Inhalation		Plant		Meat		Milk		Soil	
Nuclide	risk	fract.	risk	fract.	risk	fract.	risk	fract.	risk	fract.	risk	fract.
Cs-137	1.427E-06	0.0174	5.700E-12	0.0000	8.060E-08	0.0010	7.048E-09	0.0001	2.301E-09	0.0000	6.340E-10	0.0000
Pb-210	2.450E-08	0.0003	1.581E-08	0.0002	1.880E-05	0.2293	6.473E-08	0.0008	3.142E-08	0.0004	5.895E-07	0.0072
Ra-226	4.784E-05	0.5834	1.432E-08	0.0002	1.104E-05	0.1346	3.219E-08	0.0004	3.940E-08	0.0005	8.683E-08	0.0011
Sr-90	1.321E-08	0.0002	2.638E-11	0.0000	1.843E-06	0.0225	3.721E-08	0.0005	1.105E-08	0.0001	1.932E-09	0.0000
Total	4.930E-05	0.6013	3.016E-08	0.0004	3.176E-05	0.3873	1.412E-07	0.0017	8.417E-08	0.0010	6.789E-07	0.0083

Excess Cancer Risks CNRS(i,p,t) for Individual Radionuclides (i) and Pathways (p)
and Fraction of Total Risk at t= 3.000E+00 years

Water Dependent Pathways

Radio-	Water		Fish		Plant		Meat		Milk		All Pathways**	
Nuclide	risk	fract.	risk	fract.	risk	fract.	risk	fract.	risk	fract.	risk	fract.
Cs-137	0.000E+00	0.0000	0.000E+00	0.0000	0.000E+00	0.0000	0.000E+00	0.0000	0.000E+00	0.0000	1.518E-06	0.0185
Pb-210	0.000E+00	0.0000	0.000E+00	0.0000	0.000E+00	0.0000	0.000E+00	0.0000	0.000E+00	0.0000	1.952E-05	0.2381
Ra-226	0.000E+00	0.0000	0.000E+00	0.0000	0.000E+00	0.0000	0.000E+00	0.0000	0.000E+00	0.0000	5.905E-05	0.7201
Sr-90	0.000E+00	0.0000	0.000E+00	0.0000	0.000E+00	0.0000	0.000E+00	0.0000	0.000E+00	0.0000	1.906E-06	0.0232
Total	0.000E+00	0.0000	0.000E+00	0.0000	0.000E+00	0.0000	0.000E+00	0.0000	0.000E+00	0.0000	8.199E-05	1.0000

** Sum of water independent ground, inhalation, plant, meat, milk, soil
and water dependent water, fish, plant, meat, milk pathways

Excess Cancer Risks CNRS9(irn,i,t) and CNRS9W(irn,i,t) for Inhalation of
Radon and its Decay Products at t= 3.000E+00 years

Radon	Radionuclides							
Pathway	Rn-222	Po-218	Pb-214	Bi-214	Rn-220	Po-216	Pb-212	Bi-212
Water-ind.	0.000E+00	0.000E+00	0.000E+00	0.000E+00	0.000E+00	0.000E+00	0.000E+00	0.000E+00
Water-dep.	0.000E+00	0.000E+00	0.000E+00	0.000E+00	0.000E+00	0.000E+00	0.000E+00	0.000E+00
Total	0.000E+00	0.000E+00	0.000E+00	0.000E+00	0.000E+00	0.000E+00	0.000E+00	0.000E+00

Water-ind. == Water-independent Water-dep. == Water-dependent

Total Excess Cancer Risk CNRS(i,p,t)*** for Initially Existent Radionuclides (i) and Pathways (p)
and Fraction of Total Risk at t= 3.000E+00 years

Water Independent Pathways (Inhalation excludes radon)

Radio-	Ground		Inhalation		Radon		Plant		Meat		Milk		Soil	
Nuclide	risk	fract.	risk	fract.	risk	fract.	risk	fract.	risk	fract.	risk	fract.	risk	fract.
Cs-137	1.427E-06	0.0174	5.700E-12	0.0000	0.000E+00	0.0000	8.060E-08	0.0010	7.048E-09	0.0001	2.301E-09	0.0000	6.340E-10	0.0000
Pb-210	1.465E-08	0.0002	9.454E-09	0.0001	0.000E+00	0.0000	1.120E-05	0.1366	3.831E-08	0.0005	1.866E-08	0.0002	3.525E-07	0.0043
Ra-226	4.785E-05	0.5835	2.067E-08	0.0003	0.000E+00	0.0000	1.863E-05	0.2272	5.861E-08	0.0007	5.216E-08	0.0006	3.238E-07	0.0039
Sr-90	1.321E-08	0.0002	2.638E-11	0.0000	0.000E+00	0.0000	1.843E-06	0.0225	3.721E-08	0.0005	1.105E-08	0.0001	1.932E-09	0.0000
Total	4.930E-05	0.6013	3.016E-08	0.0004	0.000E+00	0.0000	3.176E-05	0.3873	1.412E-07	0.0017	8.417E-08	0.0010	6.789E-07	0.0083

Total Excess Cancer Risk CNRS(i,p,t)*** for Initially Existent Radionuclides (i) and Pathways (p)
and Fraction of Total Risk at t= 3.000E+00 years

Water Dependent Pathways

Radio-	Water		Fish		Radon		Plant		Meat		Milk		All pathways	
Nuclide	risk	fract.	risk	fract.	risk	fract.	risk	fract.	risk	fract.	risk	fract.	risk	fract.
Cs-137	0.000E+00	0.0000	0.000E+00	0.0000	0.000E+00	0.0000	0.000E+00	0.0000	0.000E+00	0.0000	0.000E+00	0.0000	1.518E-06	0.0185
Pb-210	0.000E+00	0.0000	0.000E+00	0.0000	0.000E+00	0.0000	0.000E+00	0.0000	0.000E+00	0.0000	0.000E+00	0.0000	1.164E-05	0.1419
Ra-226	0.000E+00	0.0000	0.000E+00	0.0000	0.000E+00	0.0000	0.000E+00	0.0000	0.000E+00	0.0000	0.000E+00	0.0000	6.693E-05	0.8163
Sr-90	0.000E+00	0.0000	0.000E+00	0.0000	0.000E+00	0.0000	0.000E+00	0.0000	0.000E+00	0.0000	0.000E+00	0.0000	1.906E-06	0.0232
Total	0.000E+00	0.0000	0.000E+00	0.0000	0.000E+00	0.0000	0.000E+00	0.0000	0.000E+00	0.0000	0.000E+00	0.0000	8.199E-05	1.0000

***CNRSI(i,p,t) includes contribution from decay daughter radionuclides

Amount of Intake Quantities QINT(i,p,t) for Individual Radionuclides (i) and Pathways (p)
As pCi/yr at t= 1.000E+01 years

Radio-	Water Independent Pathways (Inhalation w/o radon)					Water Dependent Pathways					
Nuclide	Inhalation	Plant	Meat	Milk	Soil	Water	Fish	Plant	Meat	Milk	Ingestion*
Cs-137	2.001E-03	8.473E+01	7.409E+00	2.419E+00	6.665E-01	0.000E+00	0.000E+00	0.000E+00	0.000E+00	0.000E+00	9.523E+01
Pb-210	1.743E-02	1.851E+02	6.375E-01	3.094E-01	5.805E+00	0.000E+00	0.000E+00	0.000E+00	0.000E+00	0.000E+00	1.919E+02
Ra-226	1.726E-02	7.308E+02	2.131E+00	2.609E+00	5.748E+00	0.000E+00	0.000E+00	0.000E+00	0.000E+00	0.000E+00	7.413E+02
Sr-90	2.485E-03	7.892E+02	1.594E+01	4.731E+00	8.276E-01	0.000E+00	0.000E+00	0.000E+00	0.000E+00	0.000E+00	8.107E+02

* Sum of all ingestion pathways, i.e. water independent plant, meat, milk, soil
and water-dependent water, fish, plant, meat, milk pathways

Amount of Intake Quantities QINT9(irn,i,t) and QINT9W(irn,i,t) for Inhalation of
Radon and its Decay Products as pCi/yr at t= 1.000E+01 years

Radon	Radionuclides							
Pathway	Rn-222	Po-218	Pb-214	Bi-214	Rn-220	Po-216	Pb-212	Bi-212
Water-ind.	0.000E+00	0.000E+00	0.000E+00	0.000E+00	0.000E+00	0.000E+00	0.000E+00	0.000E+00
Water-dep.	0.000E+00	0.000E+00	0.000E+00	0.000E+00	0.000E+00	0.000E+00	0.000E+00	0.000E+00
Total	0.000E+00	0.000E+00	0.000E+00	0.000E+00	0.000E+00	0.000E+00	0.000E+00	0.000E+00

Water-ind. == Water-independent Water-dep. == Water-dependent

Excess Cancer Risks CNRS(i,p,t) for Individual Radionuclides (i) and Pathways (p)
and Fraction of Total Risk at t= 1.000E+01 years

Water Independent Pathways (Inhalation excludes radon)

Radio-	Ground		Inhalation		Plant		Meat		Milk		Soil	
Nuclide	risk	fract.	risk	fract.	risk	fract.	risk	fract.	risk	fract.	risk	fract.
Cs-137	1.214E-06	0.0152	4.848E-12	0.0000	6.854E-08	0.0009	5.994E-09	0.0001	1.957E-09	0.0000	5.392E-10	0.0000
Pb-210	2.413E-08	0.0003	1.557E-08	0.0002	1.851E-05	0.2315	6.374E-08	0.0008	3.094E-08	0.0004	5.805E-07	0.0073
Ra-226	4.690E-05	0.5865	1.404E-08	0.0002	1.082E-05	0.1354	3.156E-08	0.0004	3.864E-08	0.0005	8.514E-08	0.0011
Sr-90	1.076E-08	0.0001	2.149E-11	0.0000	1.501E-06	0.0188	3.031E-08	0.0004	8.997E-09	0.0001	1.574E-09	0.0000
Total	4.815E-05	0.6022	2.963E-08	0.0004	3.090E-05	0.3865	1.316E-07	0.0016	8.053E-08	0.0010	6.677E-07	0.0084

Excess Cancer Risks CNRS(i,p,t) for Individual Radionuclides (i) and Pathways (p)
and Fraction of Total Risk at t= 1.000E+01 years

Water Dependent Pathways

Radio-	Water		Fish		Plant		Meat		Milk		All Pathways**	
Nuclide	risk	fract.	risk	fract.	risk	fract.	risk	fract.	risk	fract.	risk	fract.
Cs-137	0.000E+00	0.0000	0.000E+00	0.0000	0.000E+00	0.0000	0.000E+00	0.0000	0.000E+00	0.0000	1.291E-06	0.0161
Pb-210	0.000E+00	0.0000	0.000E+00	0.0000	0.000E+00	0.0000	0.000E+00	0.0000	0.000E+00	0.0000	1.923E-05	0.2404
Ra-226	0.000E+00	0.0000	0.000E+00	0.0000	0.000E+00	0.0000	0.000E+00	0.0000	0.000E+00	0.0000	5.790E-05	0.7240
Sr-90	0.000E+00	0.0000	0.000E+00	0.0000	0.000E+00	0.0000	0.000E+00	0.0000	0.000E+00	0.0000	1.552E-06	0.0194
Total	0.000E+00	0.0000	0.000E+00	0.0000	0.000E+00	0.0000	0.000E+00	0.0000	0.000E+00	0.0000	7.997E-05	1.0000

** Sum of water independent ground, inhalation, plant, meat, milk, soil
and water dependent water, fish, plant, meat, milk pathways

Excess Cancer Risks CNRS9(irn,i,t) and CNRS9W(irn,i,t) for Inhalation of
Radon and its Decay Products at t= 1.000E+01 years

Radon	Radionuclides							
Pathway	Rn-222	Po-218	Pb-214	Bi-214	Rn-220	Po-216	Pb-212	Bi-212
Water-ind.	0.000E+00	0.000E+00	0.000E+00	0.000E+00	0.000E+00	0.000E+00	0.000E+00	0.000E+00
Water-dep.	0.000E+00	0.000E+00	0.000E+00	0.000E+00	0.000E+00	0.000E+00	0.000E+00	0.000E+00
Total	0.000E+00	0.000E+00	0.000E+00	0.000E+00	0.000E+00	0.000E+00	0.000E+00	0.000E+00

Water-ind. == Water-independent Water-dep. == Water-dependent

Total Excess Cancer Risk CNRS(i,p,t)*** for Initially Existent Radionuclides (i) and Pathways (p)
and Fraction of Total Risk at t= 1.000E+01 years

Water Independent Pathways (Inhalation excludes radon)

Radio-	Ground		Inhalation		Radon		Plant		Meat		Milk		Soil	
Nuclide	risk	fract.	risk	fract.	risk	fract.	risk	fract.	risk	fract.	risk	fract.	risk	fract.
Cs-137	1.214E-06	0.0152	4.848E-12	0.0000	0.000E+00	0.0000	6.854E-08	0.0009	5.994E-09	0.0001	1.957E-09	0.0000	5.392E-10	0.0000
Pb-210	1.165E-08	0.0001	7.517E-09	0.0001	0.000E+00	0.0000	8.909E-06	0.1114	3.046E-08	0.0004	1.484E-08	0.0002	2.803E-07	0.0035
Ra-226	4.692E-05	0.5867	2.209E-08	0.0003	0.000E+00	0.0000	2.043E-05	0.2554	6.484E-08	0.0008	5.473E-08	0.0007	3.853E-07	0.0048
Sr-90	1.076E-08	0.0001	2.149E-11	0.0000	0.000E+00	0.0000	1.501E-06	0.0188	3.031E-08	0.0004	8.997E-09	0.0001	1.574E-09	0.0000
Total	4.815E-05	0.6022	2.963E-08	0.0004	0.000E+00	0.0000	3.090E-05	0.3865	1.316E-07	0.0016	8.053E-08	0.0010	6.677E-07	0.0084

Total Excess Cancer Risk CNRS(i,p,t)*** for Initially Existent Radionuclides (i) and Pathways (p)
and Fraction of Total Risk at t= 1.000E+01 years

Water Dependent Pathways

Radio-	Water		Fish		Radon		Plant		Meat		Milk		All pathways	
Nuclide	risk	fract.	risk	fract.	risk	fract.	risk	fract.	risk	fract.	risk	fract.	risk	fract.
Cs-137	0.000E+00	0.0000	0.000E+00	0.0000	0.000E+00	0.0000	0.000E+00	0.0000	0.000E+00	0.0000	0.000E+00	0.0000	1.291E-06	0.0161
Pb-210	0.000E+00	0.0000	0.000E+00	0.0000	0.000E+00	0.0000	0.000E+00	0.0000	0.000E+00	0.0000	0.000E+00	0.0000	9.254E-06	0.1157
Ra-226	0.000E+00	0.0000	0.000E+00	0.0000	0.000E+00	0.0000	0.000E+00	0.0000	0.000E+00	0.0000	0.000E+00	0.0000	6.787E-05	0.8487
Sr-90	0.000E+00	0.0000	0.000E+00	0.0000	0.000E+00	0.0000	0.000E+00	0.0000	0.000E+00	0.0000	0.000E+00	0.0000	1.552E-06	0.0194
Total	0.000E+00	0.0000	0.000E+00	0.0000	0.000E+00	0.0000	0.000E+00	0.0000	0.000E+00	0.0000	0.000E+00	0.0000	7.997E-05	1.0000

***CNRSI(i,p,t) includes contribution from decay daughter radionuclides

Amount of Intake Quantities QINT(i,p,t) for Individual Radionuclides (i) and Pathways (p)
As pCi/yr at t= 3.000E+01 years

Radio-	Water Independent Pathways (Inhalation w/o radon)					Water Dependent Pathways					
Nuclide	Inhalation	Plant	Meat	Milk	Soil	Water	Fish	Plant	Meat	Milk	Ingestion*
Cs-137	1.260E-03	5.334E+01	4.664E+00	1.523E+00	4.196E-01	0.000E+00	0.000E+00	0.000E+00	0.000E+00	0.000E+00	5.995E+01
Pb-210	1.669E-02	1.772E+02	6.103E-01	2.962E-01	5.558E+00	0.000E+00	0.000E+00	0.000E+00	0.000E+00	0.000E+00	1.837E+02
Ra-226	1.632E-02	6.909E+02	2.015E+00	2.466E+00	5.435E+00	0.000E+00	0.000E+00	0.000E+00	0.000E+00	0.000E+00	7.009E+02
Sr-90	1.382E-03	4.390E+02	8.866E+00	2.632E+00	4.604E-01	0.000E+00	0.000E+00	0.000E+00	0.000E+00	0.000E+00	4.510E+02

* Sum of all ingestion pathways, i.e. water independent plant, meat, milk, soil
and water-dependent water, fish, plant, meat, milk pathways

Amount of Intake Quantities QINT9(irn,i,t) and QINT9W(irn,i,t) for Inhalation of
Radon and its Decay Products as pCi/yr at t= 3.000E+01 years

Radon	Radionuclides							
Pathway	Rn-222	Po-218	Pb-214	Bi-214	Rn-220	Po-216	Pb-212	Bi-212
Water-ind.	0.000E+00	0.000E+00	0.000E+00	0.000E+00	0.000E+00	0.000E+00	0.000E+00	0.000E+00
Water-dep.	0.000E+00	0.000E+00	0.000E+00	0.000E+00	0.000E+00	0.000E+00	0.000E+00	0.000E+00
Total	0.000E+00	0.000E+00	0.000E+00	0.000E+00	0.000E+00	0.000E+00	0.000E+00	0.000E+00

Water-ind. == Water-independent Water-dep. == Water-dependent

Excess Cancer Risks CNRS(i,p,t) for Individual Radionuclides (i) and Pathways (p)
and Fraction of Total Risk at t= 3.000E+01 years

Water Independent Pathways (Inhalation excludes radon)

Radio-	Ground		Inhalation		Plant		Meat		Milk		Soil	
Nuclide	risk	fract.	risk	fract.	risk	fract.	risk	fract.	risk	fract.	risk	fract.
Cs-137	7.642E-07	0.0102	3.052E-12	0.0000	4.315E-08	0.0006	3.773E-09	0.0001	1.232E-09	0.0000	3.394E-10	0.0000
Pb-210	2.300E-08	0.0003	1.484E-08	0.0002	1.765E-05	0.2361	6.076E-08	0.0008	2.949E-08	0.0004	5.534E-07	0.0074
Ra-226	4.434E-05	0.5933	1.327E-08	0.0002	1.023E-05	0.1369	2.984E-08	0.0004	3.653E-08	0.0005	8.049E-08	0.0011
Sr-90	5.986E-09	0.0001	1.195E-11	0.0000	8.349E-07	0.0112	1.686E-08	0.0002	5.005E-09	0.0001	8.755E-10	0.0000
Total	4.514E-05	0.6039	2.813E-08	0.0004	2.876E-05	0.3848	1.112E-07	0.0015	7.226E-08	0.0010	6.351E-07	0.0085

Excess Cancer Risks CNRS(i,p,t) for Individual Radionuclides (i) and Pathways (p)
and Fraction of Total Risk at t= 3.000E+01 years

Water Dependent Pathways

Radio-	Water		Fish		Plant		Meat		Milk		All Pathways**	
Nuclide	risk	fract.	risk	fract.	risk	fract.	risk	fract.	risk	fract.	risk	fract.
Cs-137	0.000E+00	0.0000	0.000E+00	0.0000	0.000E+00	0.0000	0.000E+00	0.0000	0.000E+00	0.0000	8.127E-07	0.0109
Pb-210	0.000E+00	0.0000	0.000E+00	0.0000	0.000E+00	0.0000	0.000E+00	0.0000	0.000E+00	0.0000	1.833E-05	0.2452
Ra-226	0.000E+00	0.0000	0.000E+00	0.0000	0.000E+00	0.0000	0.000E+00	0.0000	0.000E+00	0.0000	5.474E-05	0.7324
Sr-90	0.000E+00	0.0000	0.000E+00	0.0000	0.000E+00	0.0000	0.000E+00	0.0000	0.000E+00	0.0000	8.636E-07	0.0116
Total	0.000E+00	0.0000	0.000E+00	0.0000	0.000E+00	0.0000	0.000E+00	0.0000	0.000E+00	0.0000	7.474E-05	1.0000

** Sum of water independent ground, inhalation, plant, meat, milk, soil
and water dependent water, fish, plant, meat, milk pathways

Excess Cancer Risks CNRS9(irn,i,t) and CNRS9W(irn,i,t) for Inhalation of
Radon and its Decay Products at t= 3.000E+01 years

Radon	Radionuclides							
Pathway	Rn-222	Po-218	Pb-214	Bi-214	Rn-220	Po-216	Pb-212	Bi-212
Water-ind.	0.000E+00	0.000E+00	0.000E+00	0.000E+00	0.000E+00	0.000E+00	0.000E+00	0.000E+00
Water-dep.	0.000E+00	0.000E+00	0.000E+00	0.000E+00	0.000E+00	0.000E+00	0.000E+00	0.000E+00
Total	0.000E+00	0.000E+00	0.000E+00	0.000E+00	0.000E+00	0.000E+00	0.000E+00	0.000E+00

Water-ind. == Water-independent Water-dep. == Water-dependent

Total Excess Cancer Risk CNRS(i,p,t)*** for Initially Existent Radionuclides (i) and Pathways (p)
and Fraction of Total Risk at t= 3.000E+01 years

Water Independent Pathways (Inhalation excludes radon)

Radio-	Ground		Inhalation		Radon		Plant		Meat		Milk		Soil	
Nuclide	risk	fract.	risk	fract.	risk	fract.	risk	fract.	risk	fract.	risk	fract.	risk	fract.
Cs-137	7.642E-07	0.0102	3.052E-12	0.0000	0.000E+00	0.0000	4.315E-08	0.0006	3.773E-09	0.0001	1.232E-09	0.0000	3.394E-10	0.0000
Pb-210	6.051E-09	0.0001	3.905E-09	0.0001	0.000E+00	0.0000	4.628E-06	0.0619	1.582E-08	0.0002	7.709E-09	0.0001	1.456E-07	0.0019
Ra-226	4.436E-05	0.5935	2.421E-08	0.0003	0.000E+00	0.0000	2.325E-05	0.3111	7.477E-08	0.0010	5.831E-08	0.0008	4.882E-07	0.0065
Sr-90	5.986E-09	0.0001	1.195E-11	0.0000	0.000E+00	0.0000	8.349E-07	0.0112	1.686E-08	0.0002	5.005E-09	0.0001	8.755E-10	0.0000
Total	4.514E-05	0.6039	2.813E-08	0.0004	0.000E+00	0.0000	2.876E-05	0.3848	1.112E-07	0.0015	7.226E-08	0.0010	6.351E-07	0.0085

Total Excess Cancer Risk CNRS(i,p,t)*** for Initially Existent Radionuclides (i) and Pathways (p)
and Fraction of Total Risk at t= 3.000E+01 years

Water Dependent Pathways

Radio-	Water		Fish		Radon		Plant		Meat		Milk		All pathways	
Nuclide	risk	fract.	risk	fract.	risk	fract.	risk	fract.	risk	fract.	risk	fract.	risk	fract.
Cs-137	0.000E+00	0.0000	0.000E+00	0.0000	0.000E+00	0.0000	0.000E+00	0.0000	0.000E+00	0.0000	0.000E+00	0.0000	8.127E-07	0.0109
Pb-210	0.000E+00	0.0000	0.000E+00	0.0000	0.000E+00	0.0000	0.000E+00	0.0000	0.000E+00	0.0000	0.000E+00	0.0000	4.807E-06	0.0643
Ra-226	0.000E+00	0.0000	0.000E+00	0.0000	0.000E+00	0.0000	0.000E+00	0.0000	0.000E+00	0.0000	0.000E+00	0.0000	6.826E-05	0.9133
Sr-90	0.000E+00	0.0000	0.000E+00	0.0000	0.000E+00	0.0000	0.000E+00	0.0000	0.000E+00	0.0000	0.000E+00	0.0000	8.636E-07	0.0116
Total	0.000E+00	0.0000	0.000E+00	0.0000	0.000E+00	0.0000	0.000E+00	0.0000	0.000E+00	0.0000	0.000E+00	0.0000	7.474E-05	1.0000

***CNRSI(i,p,t) includes contribution from decay daughter radionuclides

Amount of Intake Quantities QINT(i,p,t) for Individual Radionuclides (i) and Pathways (p)
As pCi/yr at t= 1.000E+02 years

Radio-	Water Independent Pathways (Inhalation w/o radon)					Water Dependent Pathways					
Nuclide	Inhalation	Plant	Meat	Milk	Soil	Water	Fish	Plant	Meat	Milk	Ingestion*
Cs-137	2.493E-04	1.056E+01	9.231E-01	3.014E-01	8.304E-02	0.000E+00	0.000E+00	0.000E+00	0.000E+00	0.000E+00	1.186E+01
Pb-210	1.389E-02	1.475E+02	5.080E-01	2.466E-01	4.627E+00	0.000E+00	0.000E+00	0.000E+00	0.000E+00	0.000E+00	1.529E+02
Ra-226	1.341E-02	5.677E+02	1.655E+00	2.026E+00	4.465E+00	0.000E+00	0.000E+00	0.000E+00	0.000E+00	0.000E+00	5.758E+02
Sr-90	1.775E-04	5.639E+01	1.139E+00	3.381E-01	5.913E-02	0.000E+00	0.000E+00	0.000E+00	0.000E+00	0.000E+00	5.792E+01

* Sum of all ingestion pathways, i.e. water independent plant, meat, milk, soil
and water-dependent water, fish, plant, meat, milk pathways

Amount of Intake Quantities QINT9(irn,i,t) and QINT9W(irn,i,t) for Inhalation of
Radon and its Decay Products as pCi/yr at t= 1.000E+02 years

Radon	Radionuclides							
Pathway	Rn-222	Po-218	Pb-214	Bi-214	Rn-220	Po-216	Pb-212	Bi-212
Water-ind.	0.000E+00	0.000E+00	0.000E+00	0.000E+00	0.000E+00	0.000E+00	0.000E+00	0.000E+00
Water-dep.	0.000E+00	0.000E+00	0.000E+00	0.000E+00	0.000E+00	0.000E+00	0.000E+00	0.000E+00
Total	0.000E+00	0.000E+00	0.000E+00	0.000E+00	0.000E+00	0.000E+00	0.000E+00	0.000E+00

Water-ind. == Water-independent Water-dep. == Water-dependent

Excess Cancer Risks CNRS(i,p,t) for Individual Radionuclides (i) and Pathways (p)
and Fraction of Total Risk at t= 1.000E+02 years

Water Independent Pathways (Inhalation excludes radon)

Radio-	Ground		Inhalation		Plant		Meat		Milk		Soil	
Nuclide	risk	fract.	risk	fract.	risk	fract.	risk	fract.	risk	fract.	risk	fract.
Cs-137	1.513E-07	0.0025	6.040E-13	0.0000	8.540E-09	0.0001	7.468E-10	0.0000	2.439E-10	0.0000	6.718E-11	0.0000
Pb-210	1.906E-08	0.0003	1.230E-08	0.0002	1.463E-05	0.2420	5.036E-08	0.0008	2.444E-08	0.0004	4.587E-07	0.0076
Ra-226	3.643E-05	0.6029	1.090E-08	0.0002	8.408E-06	0.1391	2.451E-08	0.0004	3.001E-08	0.0005	6.613E-08	0.0011
Sr-90	7.688E-10	0.0000	1.535E-12	0.0000	1.072E-07	0.0018	2.165E-09	0.0000	6.429E-10	0.0000	1.124E-10	0.0000
Total	3.660E-05	0.6057	2.321E-08	0.0004	2.315E-05	0.3830	7.778E-08	0.0013	5.534E-08	0.0009	5.250E-07	0.0087

Excess Cancer Risks CNRS(i,p,t) for Individual Radionuclides (i) and Pathways (p)
and Fraction of Total Risk at t= 1.000E+02 years

Water Dependent Pathways

Radio-	Water		Fish		Plant		Meat		Milk		All Pathways**	
Nuclide	risk	fract.	risk	fract.	risk	fract.	risk	fract.	risk	fract.	risk	fract.
Cs-137	0.000E+00	0.0000	0.000E+00	0.0000	0.000E+00	0.0000	0.000E+00	0.0000	0.000E+00	0.0000	1.608E-07	0.0027
Pb-210	0.000E+00	0.0000	0.000E+00	0.0000	0.000E+00	0.0000	0.000E+00	0.0000	0.000E+00	0.0000	1.519E-05	0.2513
Ra-226	0.000E+00	0.0000	0.000E+00	0.0000	0.000E+00	0.0000	0.000E+00	0.0000	0.000E+00	0.0000	4.497E-05	0.7442
Sr-90	0.000E+00	0.0000	0.000E+00	0.0000	0.000E+00	0.0000	0.000E+00	0.0000	0.000E+00	0.0000	1.109E-07	0.0018
Total	0.000E+00	0.0000	0.000E+00	0.0000	0.000E+00	0.0000	0.000E+00	0.0000	0.000E+00	0.0000	6.043E-05	1.0000

** Sum of water independent ground, inhalation, plant, meat, milk, soil
and water dependent water, fish, plant, meat, milk pathways

Excess Cancer Risks CNRS9(irn,i,t) and CNRS9W(irn,i,t) for Inhalation of
Radon and its Decay Products at t= 1.000E+02 years

Radon	Radionuclides							
Pathway	Rn-222	Po-218	Pb-214	Bi-214	Rn-220	Po-216	Pb-212	Bi-212
Water-ind.	0.000E+00	0.000E+00	0.000E+00	0.000E+00	0.000E+00	0.000E+00	0.000E+00	0.000E+00
Water-dep.	0.000E+00	0.000E+00	0.000E+00	0.000E+00	0.000E+00	0.000E+00	0.000E+00	0.000E+00
Total	0.000E+00	0.000E+00	0.000E+00	0.000E+00	0.000E+00	0.000E+00	0.000E+00	0.000E+00

Water-ind. == Water-independent Water-dep. == Water-dependent

Total Excess Cancer Risk CNRS(i,p,t)*** for Initially Existent Radionuclides (i) and Pathways (p)
and Fraction of Total Risk at t= 1.000E+02 years

Water Independent Pathways (Inhalation excludes radon)

Radio-	Ground		Inhalation		Radon		Plant		Meat		Milk		Soil	
Nuclide	risk	fract.	risk	fract.	risk	fract.	risk	fract.	risk	fract.	risk	fract.	risk	fract.
Cs-137	1.513E-07	0.0025	6.040E-13	0.0000	0.000E+00	0.0000	8.540E-09	0.0001	7.468E-10	0.0000	2.439E-10	0.0000	6.718E-11	0.0000
Pb-210	6.114E-10	0.0000	3.946E-10	0.0000	0.000E+00	0.0000	4.676E-07	0.0077	1.599E-09	0.0000	7.790E-10	0.0000	1.471E-08	0.0002
Ra-226	3.645E-05	0.6032	2.281E-08	0.0004	0.000E+00	0.0000	2.257E-05	0.3734	7.327E-08	0.0012	5.367E-08	0.0009	5.101E-07	0.0084
Sr-90	7.688E-10	0.0000	1.535E-12	0.0000	0.000E+00	0.0000	1.072E-07	0.0018	2.165E-09	0.0000	6.429E-10	0.0000	1.124E-10	0.0000
Total	3.660E-05	0.6057	2.321E-08	0.0004	0.000E+00	0.0000	2.315E-05	0.3830	7.778E-08	0.0013	5.534E-08	0.0009	5.250E-07	0.0087

Intrisk : RESRAD Default Parameters
File : C:\RESRAD_FAMILY\RESRAD\6.5\USERFILES\PARCEL G SURVEY UNIT 119 BACKFILL MDA.RAD

Total Excess Cancer Risk CNRS(i,p,t)*** for Initially Existent Radionuclides (i) and Pathways (p)
and Fraction of Total Risk at t= 1.000E+02 years

Water Dependent Pathways

Radio-	Water		Fish		Radon		Plant		Meat		Milk		All pathways	
Nuclide	risk	fract.	risk	fract.	risk	fract.	risk	fract.	risk	fract.	risk	fract.	risk	fract.
Cs-137	0.000E+00	0.0000	0.000E+00	0.0000	0.000E+00	0.0000	0.000E+00	0.0000	0.000E+00	0.0000	0.000E+00	0.0000	1.608E-07	0.0027
Pb-210	0.000E+00	0.0000	0.000E+00	0.0000	0.000E+00	0.0000	0.000E+00	0.0000	0.000E+00	0.0000	0.000E+00	0.0000	4.857E-07	0.0080
Ra-226	0.000E+00	0.0000	0.000E+00	0.0000	0.000E+00	0.0000	0.000E+00	0.0000	0.000E+00	0.0000	0.000E+00	0.0000	5.968E-05	0.9875
Sr-90	0.000E+00	0.0000	0.000E+00	0.0000	0.000E+00	0.0000	0.000E+00	0.0000	0.000E+00	0.0000	0.000E+00	0.0000	1.109E-07	0.0018
Total	0.000E+00	0.0000	0.000E+00	0.0000	0.000E+00	0.0000	0.000E+00	0.0000	0.000E+00	0.0000	0.000E+00	0.0000	6.043E-05	1.0000

***CNRSI(i,p,t) includes contribution from decay daughter radionuclides

Amount of Intake Quantities QINT(i,p,t) for Individual Radionuclides (i) and Pathways (p)
As pCi/yr at t= 3.000E+02 years

Radio-	Water Independent Pathways (Inhalation w/o radon)					Water Dependent Pathways					
Nuclide	Inhalation	Plant	Meat	Milk	Soil	Water	Fish	Plant	Meat	Milk	Ingestion*
Cs-137	2.436E-06	1.032E-01	9.021E-03	2.946E-03	8.115E-04	0.000E+00	0.000E+00	0.000E+00	0.000E+00	0.000E+00	1.159E-01
Pb-210	7.939E-03	8.432E+01	2.903E-01	1.409E-01	2.644E+00	0.000E+00	0.000E+00	0.000E+00	0.000E+00	0.000E+00	8.739E+01
Ra-226	7.647E-03	3.238E+02	9.442E-01	1.156E+00	2.547E+00	0.000E+00	0.000E+00	0.000E+00	0.000E+00	0.000E+00	3.285E+02
Sr-90	5.042E-07	1.602E-01	3.234E-03	9.602E-04	1.679E-04	1.605E-01	6.271E-05	7.703E-03	8.003E-04	4.369E-04	3.341E-01

* Sum of all ingestion pathways, i.e. water independent plant, meat, milk, soil
and water-dependent water, fish, plant, meat, milk pathways

Amount of Intake Quantities QINT9(irn,i,t) and QINT9W(irn,i,t) for Inhalation of
Radon and its Decay Products as pCi/yr at t= 3.000E+02 years

Radon	Radionuclides							
Pathway	Rn-222	Po-218	Pb-214	Bi-214	Rn-220	Po-216	Pb-212	Bi-212
Water-ind.	0.000E+00	0.000E+00	0.000E+00	0.000E+00	0.000E+00	0.000E+00	0.000E+00	0.000E+00
Water-dep.	0.000E+00	0.000E+00	0.000E+00	0.000E+00	0.000E+00	0.000E+00	0.000E+00	0.000E+00
Total	0.000E+00	0.000E+00	0.000E+00	0.000E+00	0.000E+00	0.000E+00	0.000E+00	0.000E+00

Water-ind. == Water-independent Water-dep. == Water-dependent

Excess Cancer Risks CNRS(i,p,t) for Individual Radionuclides (i) and Pathways (p)
and Fraction of Total Risk at t= 3.000E+02 years

Water Independent Pathways (Inhalation excludes radon)

Radio-	Ground		Inhalation		Plant		Meat		Milk		Soil	
Nuclide	risk	fract.	risk	fract.	risk	fract.	risk	fract.	risk	fract.	risk	fract.
Cs-137	1.478E-09	0.0000	5.902E-15	0.0000	8.346E-11	0.0000	7.298E-12	0.0000	2.383E-12	0.0000	6.565E-13	0.0000
Pb-210	1.089E-08	0.0003	7.025E-09	0.0002	8.353E-06	0.2433	2.876E-08	0.0008	1.396E-08	0.0004	2.619E-07	0.0076
Ra-226	2.078E-05	0.6054	6.220E-09	0.0002	4.796E-06	0.1397	1.398E-08	0.0004	1.712E-08	0.0005	3.772E-08	0.0011
Sr-90	2.184E-12	0.0000	4.361E-15	0.0000	3.046E-10	0.0000	6.151E-12	0.0000	1.826E-12	0.0000	3.194E-13	0.0000
Total	2.079E-05	0.6057	1.325E-08	0.0004	1.315E-05	0.3830	4.276E-08	0.0012	3.108E-08	0.0009	2.997E-07	0.0087

Excess Cancer Risks CNRS(i,p,t) for Individual Radionuclides (i) and Pathways (p)
and Fraction of Total Risk at t= 3.000E+02 years

Water Dependent Pathways

Radio-	Water		Fish		Plant		Meat		Milk		All Pathways**	
Nuclide	risk	fract.	risk	fract.	risk	fract.	risk	fract.	risk	fract.	risk	fract.
Cs-137	0.000E+00	0.0000	0.000E+00	0.0000	0.000E+00	0.0000	0.000E+00	0.0000	0.000E+00	0.0000	1.572E-09	0.0000
Pb-210	0.000E+00	0.0000	0.000E+00	0.0000	0.000E+00	0.0000	0.000E+00	0.0000	0.000E+00	0.0000	8.675E-06	0.2527
Ra-226	0.000E+00	0.0000	0.000E+00	0.0000	0.000E+00	0.0000	0.000E+00	0.0000	0.000E+00	0.0000	2.565E-05	0.7472
Sr-90	2.755E-10	0.0000	1.386E-13	0.0000	1.702E-11	0.0000	1.769E-12	0.0000	9.656E-13	0.0000	6.104E-10	0.0000
Total	2.755E-10	0.0000	1.386E-13	0.0000	1.702E-11	0.0000	1.769E-12	0.0000	9.656E-13	0.0000	3.433E-05	1.0000

** Sum of water independent ground, inhalation, plant, meat, milk, soil
and water dependent water, fish, plant, meat, milk pathways

Excess Cancer Risks CNRS9(irn,i,t) and CNRS9W(irn,i,t) for Inhalation of
Radon and its Decay Products at t= 3.000E+02 years

Radon	Radionuclides							
Pathway	Rn-222	Po-218	Pb-214	Bi-214	Rn-220	Po-216	Pb-212	Bi-212
Water-ind.	0.000E+00	0.000E+00	0.000E+00	0.000E+00	0.000E+00	0.000E+00	0.000E+00	0.000E+00
Water-dep.	0.000E+00	0.000E+00	0.000E+00	0.000E+00	0.000E+00	0.000E+00	0.000E+00	0.000E+00
Total	0.000E+00	0.000E+00	0.000E+00	0.000E+00	0.000E+00	0.000E+00	0.000E+00	0.000E+00

Water-ind. == Water-independent Water-dep. == Water-dependent

Total Excess Cancer Risk CNRS(i,p,t)*** for Initially Existent Radionuclides (i) and Pathways (p)
and Fraction of Total Risk at t= 3.000E+02 years

Water Independent Pathways (Inhalation excludes radon)

Radio-	Ground		Inhalation		Radon		Plant		Meat		Milk		Soil	
Nuclide	risk	fract.	risk	fract.	risk	fract.	risk	fract.	risk	fract.	risk	fract.	risk	fract.
Cs-137	1.478E-09	0.0000	5.902E-15	0.0000	0.000E+00	0.0000	8.346E-11	0.0000	7.298E-12	0.0000	2.383E-12	0.0000	6.565E-13	0.0000
Pb-210	8.751E-13	0.0000	5.647E-13	0.0000	0.000E+00	0.0000	6.693E-10	0.0000	2.288E-12	0.0000	1.115E-12	0.0000	2.106E-11	0.0000
Ra-226	2.079E-05	0.6057	1.324E-08	0.0004	0.000E+00	0.0000	1.315E-05	0.3830	4.274E-08	0.0012	3.108E-08	0.0009	2.996E-07	0.0087
Sr-90	2.184E-12	0.0000	4.361E-15	0.0000	0.000E+00	0.0000	3.046E-10	0.0000	6.151E-12	0.0000	1.826E-12	0.0000	3.194E-13	0.0000
Total	2.079E-05	0.6057	1.325E-08	0.0004	0.000E+00	0.0000	1.315E-05	0.3830	4.276E-08	0.0012	3.108E-08	0.0009	2.997E-07	0.0087

Total Excess Cancer Risk CNRS(i,p,t)*** for Initially Existent Radionuclides (i) and Pathways (p)
and Fraction of Total Risk at t= 3.000E+02 years

Water Dependent Pathways

Radio-	Water		Fish		Radon		Plant		Meat		Milk		All pathways	
Nuclide	risk	fract.	risk	fract.	risk	fract.	risk	fract.	risk	fract.	risk	fract.	risk	fract.
Cs-137	0.000E+00	0.0000	0.000E+00	0.0000	0.000E+00	0.0000	0.000E+00	0.0000	0.000E+00	0.0000	0.000E+00	0.0000	1.572E-09	0.0000
Pb-210	0.000E+00	0.0000	0.000E+00	0.0000	0.000E+00	0.0000	0.000E+00	0.0000	0.000E+00	0.0000	0.000E+00	0.0000	6.952E-10	0.0000
Ra-226	0.000E+00	0.0000	0.000E+00	0.0000	0.000E+00	0.0000	0.000E+00	0.0000	0.000E+00	0.0000	0.000E+00	0.0000	3.433E-05	0.9999
Sr-90	2.755E-10	0.0000	1.386E-13	0.0000	0.000E+00	0.0000	1.702E-11	0.0000	1.769E-12	0.0000	9.656E-13	0.0000	6.104E-10	0.0000
Total	2.755E-10	0.0000	1.386E-13	0.0000	0.000E+00	0.0000	1.702E-11	0.0000	1.769E-12	0.0000	9.656E-13	0.0000	3.433E-05	1.0000

***CNRSI(i,p,t) includes contribution from decay daughter radionuclides

Amount of Intake Quantities QINT(i,p,t) for Individual Radionuclides (i) and Pathways (p)
As pCi/yr at t= 1.000E+03 years

Radio-	Water Independent Pathways (Inhalation w/o radon)					Water Dependent Pathways					
Nuclide	Inhalation	Plant	Meat	Milk	Soil	Water	Fish	Plant	Meat	Milk	Ingestion*
Cs-137	2.248E-13	9.516E-09	8.322E-10	2.717E-10	7.486E-11	0.000E+00	0.000E+00	0.000E+00	0.000E+00	0.000E+00	1.070E-08
Pb-210	1.113E-03	1.182E+01	4.070E-02	1.975E-02	3.707E-01	3.009E+02	4.854E-01	1.343E+01	1.496E-01	1.226E-01	3.274E+02
Ra-226	1.072E-03	4.539E+01	1.323E-01	1.620E-01	3.570E-01	4.282E+02	2.000E-01	1.926E+01	2.656E-01	5.811E-01	4.945E+02
Sr-90	6.157E-16	1.956E-10	3.949E-12	1.172E-12	2.051E-13	7.457E-10	2.914E-13	3.579E-11	3.724E-12	2.031E-12	9.884E-10

* Sum of all ingestion pathways, i.e. water independent plant, meat, milk, soil
and water-dependent water, fish, plant, meat, milk pathways

Amount of Intake Quantities QINT9(irn,i,t) and QINT9W(irn,i,t) for Inhalation of
Radon and its Decay Products as pCi/yr at t= 1.000E+03 years

Radon	Radionuclides							
Pathway	Rn-222	Po-218	Pb-214	Bi-214	Rn-220	Po-216	Pb-212	Bi-212
Water-ind.	0.000E+00	0.000E+00	0.000E+00	0.000E+00	0.000E+00	0.000E+00	0.000E+00	0.000E+00
Water-dep.	0.000E+00	0.000E+00	0.000E+00	0.000E+00	0.000E+00	0.000E+00	0.000E+00	0.000E+00
Total	0.000E+00	0.000E+00	0.000E+00	0.000E+00	0.000E+00	0.000E+00	0.000E+00	0.000E+00

Water-ind. == Water-independent Water-dep. == Water-dependent

Excess Cancer Risks CNRS(i,p,t) for Individual Radionuclides (i) and Pathways (p)
and Fraction of Total Risk at t= 1.000E+03 years

Water Independent Pathways (Inhalation excludes radon)

Radio-	Ground		Inhalation		Plant		Meat		Milk		Soil	
Nuclide	risk	fract.	risk	fract.	risk	fract.	risk	fract.	risk	fract.	risk	fract.
Cs-137	1.363E-16	0.0000	5.445E-22	0.0000	7.699E-18	0.0000	6.732E-19	0.0000	2.198E-19	0.0000	6.056E-20	0.0000
Pb-210	1.526E-09	0.0000	9.848E-10	0.0000	1.171E-06	0.0327	4.031E-09	0.0001	1.957E-09	0.0001	3.672E-08	0.0010
Ra-226	2.913E-06	0.0815	8.719E-10	0.0000	6.723E-07	0.0188	1.960E-09	0.0001	2.400E-09	0.0001	5.288E-09	0.0001
Sr-90	2.666E-21	0.0000	5.325E-24	0.0000	3.719E-19	0.0000	7.510E-21	0.0000	2.230E-21	0.0000	3.900E-22	0.0000
Total	2.915E-06	0.0815	1.857E-09	0.0001	1.843E-06	0.0516	5.992E-09	0.0002	4.356E-09	0.0001	4.201E-08	0.0012

Excess Cancer Risks CNRS(i,p,t) for Individual Radionuclides (i) and Pathways (p)
and Fraction of Total Risk at t= 1.000E+03 years

Water Dependent Pathways

Radio-	Water		Fish		Plant		Meat		Milk		All Pathways**	
Nuclide	risk	fract.	risk	fract.	risk	fract.	risk	fract.	risk	fract.	risk	fract.
Cs-137	0.000E+00	0.0000	0.000E+00	0.0000	0.000E+00	0.0000	0.000E+00	0.0000	0.000E+00	0.0000	1.450E-16	0.0000
Pb-210	2.417E-05	0.6760	5.047E-08	0.0014	1.397E-06	0.0391	1.556E-08	0.0004	1.274E-08	0.0004	2.686E-05	0.7513
Ra-226	4.982E-06	0.1393	3.107E-09	0.0001	2.991E-07	0.0084	4.126E-09	0.0001	9.027E-09	0.0003	8.893E-06	0.2487
Sr-90	1.095E-18	0.0000	5.510E-22	0.0000	6.769E-20	0.0000	7.043E-21	0.0000	3.840E-21	0.0000	1.559E-18	0.0000
Total	2.915E-05	0.8153	5.357E-08	0.0015	1.696E-06	0.0474	1.968E-08	0.0006	2.177E-08	0.0006	3.575E-05	1.0000

** Sum of water independent ground, inhalation, plant, meat, milk, soil
and water dependent water, fish, plant, meat, milk pathways

Excess Cancer Risks CNRS9(irn,i,t) and CNRS9W(irn,i,t) for Inhalation of
Radon and its Decay Products at t= 1.000E+03 years

Radon	Radionuclides							
Pathway	Rn-222	Po-218	Pb-214	Bi-214	Rn-220	Po-216	Pb-212	Bi-212
Water-ind.	0.000E+00	0.000E+00	0.000E+00	0.000E+00	0.000E+00	0.000E+00	0.000E+00	0.000E+00
Water-dep.	0.000E+00	0.000E+00	0.000E+00	0.000E+00	0.000E+00	0.000E+00	0.000E+00	0.000E+00
Total	0.000E+00	0.000E+00	0.000E+00	0.000E+00	0.000E+00	0.000E+00	0.000E+00	0.000E+00

Water-ind. == Water-independent Water-dep. == Water-dependent

Total Excess Cancer Risk CNRS(i,p,t)*** for Initially Existent Radionuclides (i) and Pathways (p)
and Fraction of Total Risk at t= 1.000E+03 years

Water Independent Pathways (Inhalation excludes radon)

Radio-	Ground		Inhalation		Radon		Plant		Meat		Milk		Soil	
Nuclide	risk	fract.	risk	fract.	risk	fract.	risk	fract.	risk	fract.	risk	fract.	risk	fract.
Cs-137	1.363E-16	0.0000	5.445E-22	0.0000	0.000E+00	0.0000	7.699E-18	0.0000	6.732E-19	0.0000	2.198E-19	0.0000	6.056E-20	0.0000
Pb-210	9.708E-23	0.0000	6.264E-23	0.0000	0.000E+00	0.0000	7.424E-20	0.0000	2.538E-22	0.0000	1.237E-22	0.0000	2.336E-21	0.0000
Ra-226	2.915E-06	0.0815	1.857E-09	0.0001	0.000E+00	0.0000	1.843E-06	0.0516	5.992E-09	0.0002	4.356E-09	0.0001	4.201E-08	0.0012
Sr-90	2.666E-21	0.0000	5.325E-24	0.0000	0.000E+00	0.0000	3.719E-19	0.0000	7.510E-21	0.0000	2.230E-21	0.0000	3.900E-22	0.0000
Total	2.915E-06	0.0815	1.857E-09	0.0001	0.000E+00	0.0000	1.843E-06	0.0516	5.992E-09	0.0002	4.356E-09	0.0001	4.201E-08	0.0012

Intrisk : RESRAD Default Parameters
File : C:\RESRAD_FAMILY\RESRAD\6.5\USERFILES\PARCEL G SURVEY UNIT 119 BACKFILL MDA.RAD

Total Excess Cancer Risk CNRS(i,p,t)*** for Initially Existent Radionuclides (i) and Pathways (p)
and Fraction of Total Risk at t= 1.000E+03 years

Water Dependent Pathways

Radio-	Water		Fish		Radon		Plant		Meat		Milk		All pathways	
Nuclide	risk	fract.	risk	fract.	risk	fract.	risk	fract.	risk	fract.	risk	fract.	risk	fract.
Cs-137	0.000E+00	0.0000	0.000E+00	0.0000	0.000E+00	0.0000	0.000E+00	0.0000	0.000E+00	0.0000	0.000E+00	0.0000	1.450E-16	0.0000
Pb-210	4.107E-19	0.0000	8.579E-22	0.0000	0.000E+00	0.0000	2.372E-20	0.0000	2.636E-22	0.0000	2.164E-22	0.0000	5.129E-19	0.0000
Ra-226	2.915E-05	0.8153	5.357E-08	0.0015	0.000E+00	0.0000	1.696E-06	0.0474	1.968E-08	0.0006	2.177E-08	0.0006	3.575E-05	1.0000
Sr-90	1.095E-18	0.0000	5.510E-22	0.0000	0.000E+00	0.0000	6.769E-20	0.0000	7.043E-21	0.0000	3.840E-21	0.0000	1.559E-18	0.0000
Total	2.915E-05	0.8153	5.357E-08	0.0015	0.000E+00	0.0000	1.696E-06	0.0474	1.968E-08	0.0006	2.177E-08	0.0006	3.575E-05	1.0000

***CNRSI(i,p,t) includes contribution from decay daughter radionuclides

ATTACHMENT 5

TRENCH UNIT
RESRAD REPORT
(on CD only)

This page intentionally left blank.

Table of Contents

Part I: Mixture Sums and Single Radionuclide Guidelines

Dose Conversion Factor (and Related) Parameter Summary ... 2
Site-Specific Parameter Summary 4
Summary of Pathway Selections 8
Contaminated Zone and Total Dose Summary 9
Total Dose Components
Time = 0.000E+00 10
Time = 1.000E+00 11
Time = 3.000E+00 12
Time = 1.000E+01 13
Time = 3.000E+01 14
Time = 1.000E+02 15
Time = 3.000E+02 16
Time = 1.000E+03 17
Dose/Source Ratios Summed Over All Pathways 18
Single Radionuclide Soil Guidelines 18
Dose Per Nuclide Summed Over All Pathways 19
Soil Concentration Per Nuclide 19

Dose Conversion Factor (and Related) Parameter Summary

Dose Library: FGR 12 & FGR 11

Menu	Parameter	Current Value#	Base Case*	Parameter Name
A-1	DCF's for external ground radiation, (mrem/yr)/(pCi/g)			
A-1	At-218 (Source: FGR 12)	5.847E-03	5.847E-03	DCF1(1)
A-1	Ba-137m (Source: FGR 12)	3.606E+00	3.606E+00	DCF1(2)
A-1	Bi-210 (Source: FGR 12)	3.606E-03	3.606E-03	DCF1(3)
A-1	Bi-214 (Source: FGR 12)	9.808E+00	9.808E+00	DCF1(4)
A-1	Cs-137 (Source: FGR 12)	7.510E-04	7.510E-04	DCF1(5)
A-1	Pb-210 (Source: FGR 12)	2.447E-03	2.447E-03	DCF1(6)
A-1	Pb-214 (Source: FGR 12)	1.341E+00	1.341E+00	DCF1(7)
A-1	Po-210 (Source: FGR 12)	5.231E-05	5.231E-05	DCF1(8)
A-1	Po-214 (Source: FGR 12)	5.138E-04	5.138E-04	DCF1(9)
A-1	Po-218 (Source: FGR 12)	5.642E-05	5.642E-05	DCF1(10)
A-1	Ra-226 (Source: FGR 12)	3.176E-02	3.176E-02	DCF1(11)
A-1	Rn-222 (Source: FGR 12)	2.354E-03	2.354E-03	DCF1(12)
A-1	Sr-90 (Source: FGR 12)	7.043E-04	7.043E-04	DCF1(13)
A-1	Tl-210 (Source: no data)	0.000E+00	-2.000E+00	DCF1(14)
A-1	Y-90 (Source: FGR 12)	2.391E-02	2.391E-02	DCF1(15)
B-1	Dose conversion factors for inhalation, mrem/pCi:			
B-1	Cs-137+D	3.190E-05	3.190E-05	DCF2(1)
B-1	Pb-210+D	2.320E-02	1.360E-02	DCF2(2)
B-1	Ra-226+D	8.594E-03	8.580E-03	DCF2(3)
B-1	Sr-90+D	1.308E-03	1.300E-03	DCF2(4)
D-1	Dose conversion factors for ingestion, mrem/pCi:			
D-1	Cs-137+D	5.000E-05	5.000E-05	DCF3(1)
D-1	Pb-210+D	7.276E-03	5.370E-03	DCF3(2)
D-1	Ra-226+D	1.321E-03	1.320E-03	DCF3(3)
D-1	Sr-90+D	1.528E-04	1.420E-04	DCF3(4)
D-34	Food transfer factors:			
D-34	Cs-137+D , plant/soil concentration ratio, dimensionless	4.000E-02	4.000E-02	RTF(1,1)
D-34	Cs-137+D , beef/livestock-intake ratio, (pCi/kg)/(pCi/d)	3.000E-02	3.000E-02	RTF(1,2)
D-34	Cs-137+D , milk/livestock-intake ratio, (pCi/L)/(pCi/d)	8.000E-03	8.000E-03	RTF(1,3)
D-34				
D-34	Pb-210+D , plant/soil concentration ratio, dimensionless	1.000E-02	1.000E-02	RTF(2,1)
D-34	Pb-210+D , beef/livestock-intake ratio, (pCi/kg)/(pCi/d)	8.000E-04	8.000E-04	RTF(2,2)
D-34	Pb-210+D , milk/livestock-intake ratio, (pCi/L)/(pCi/d)	3.000E-04	3.000E-04	RTF(2,3)
D-34				
D-34	Ra-226+D , plant/soil concentration ratio, dimensionless	4.000E-02	4.000E-02	RTF(3,1)
D-34	Ra-226+D , beef/livestock-intake ratio, (pCi/kg)/(pCi/d)	1.000E-03	1.000E-03	RTF(3,2)
D-34	Ra-226+D , milk/livestock-intake ratio, (pCi/L)/(pCi/d)	1.000E-03	1.000E-03	RTF(3,3)
D-34				
D-34	Sr-90+D , plant/soil concentration ratio, dimensionless	3.000E-01	3.000E-01	RTF(4,1)
D-34	Sr-90+D , beef/livestock-intake ratio, (pCi/kg)/(pCi/d)	8.000E-03	8.000E-03	RTF(4,2)
D-34	Sr-90+D , milk/livestock-intake ratio, (pCi/L)/(pCi/d)	2.000E-03	2.000E-03	RTF(4,3)
D-5	Bioaccumulation factors, fresh water, L/kg:			
D-5	Cs-137+D , fish	2.000E+03	2.000E+03	BIOFAC(1,1)
D-5	Cs-137+D , crustacea and mollusks	1.000E+02	1.000E+02	BIOFAC(1,2)
D-5				

Dose Conversion Factor (and Related) Parameter Summary (continued)

Dose Library: FGR 12 & FGR 11

Menu	Parameter	Current Value#	Base Case*	Parameter Name
D-5	Pb-210+D , fish	3.000E+02	3.000E+02	BIOFAC(2,1)
D-5	Pb-210+D , crustacea and mollusks	1.000E+02	1.000E+02	BIOFAC(2,2)
D-5				
D-5	Ra-226+D , fish	5.000E+01	5.000E+01	BIOFAC(3,1)
D-5	Ra-226+D , crustacea and mollusks	2.500E+02	2.500E+02	BIOFAC(3,2)
D-5				
D-5	Sr-90+D , fish	6.000E+01	6.000E+01	BIOFAC(4,1)
D-5	Sr-90+D , crustacea and mollusks	1.000E+02	1.000E+02	BIOFAC(4,2)

#For DCF1(xxx) only, factors are for infinite depth & area. See ETFG table in Ground Pathway of Detailed Report.

*Base Case means Default.Lib w/o Associate Nuclide contributions.

Site-Specific Parameter Summary

Menu	Parameter	User Input	Default	Used by RESRAD (If different from user input)	Parameter Name
R011	Area of contaminated zone (m**2)	5.79E+02	1.000E+04	---	AREA
R011	Thickness of contaminated zone (m)	2.00E+00	2.000E+00	---	THICK0
R011	Fraction of contamination that is submerged	0.00E+00	0.000E+00	---	SUBMFRACT
R011	Length parallel to aquifer flow (m)	2.40E+01	1.000E+02	---	LCZPAQ
R011	Basic radiation dose limit (mrem/yr)	2.50E+01	3.000E+01	---	BRDL
R011	Time since placement of material (yr)	0.00E+00	0.000E+00	---	TI
R011	Times for calculations (yr)	1.00E+00	1.000E+00	---	T(2)
R011	Times for calculations (yr)	3.00E+00	3.000E+00	---	T(3)
R011	Times for calculations (yr)	1.00E+01	1.000E+01	---	T(4)
R011	Times for calculations (yr)	3.00E+01	3.000E+01	---	T(5)
R011	Times for calculations (yr)	1.00E+02	1.000E+02	---	T(6)
R011	Times for calculations (yr)	3.00E+02	3.000E+02	---	T(7)
R011	Times for calculations (yr)	1.00E+03	1.000E+03	---	T(8)
R011	Times for calculations (yr)	not used	0.000E+00	---	T(9)
R011	Times for calculations (yr)	not used	0.000E+00	---	T(10)
R012	Initial principal radionuclide (pCi/g): Cs-137	5.00E-02	0.000E+00	---	S1(1)
R012	Initial principal radionuclide (pCi/g): Pb-210	2.34E-01	0.000E+00	---	S1(2)
R012	Initial principal radionuclide (pCi/g): Ra-226	2.34E-01	0.000E+00	---	S1(3)
R012	Initial principal radionuclide (pCi/g): Sr-90	2.25E-01	0.000E+00	---	S1(4)
R012	Concentration in groundwater (pCi/L): Cs-137	not used	0.000E+00	---	W1(1)
R012	Concentration in groundwater (pCi/L): Pb-210	not used	0.000E+00	---	W1(2)
R012	Concentration in groundwater (pCi/L): Ra-226	not used	0.000E+00	---	W1(3)
R012	Concentration in groundwater (pCi/L): Sr-90	not used	0.000E+00	---	W1(4)
R013	Cover depth (m)	0.00E+00	0.000E+00	---	COVER0
R013	Density of cover material (g/cm**3)	not used	1.500E+00	---	DENSCV
R013	Cover depth erosion rate (m/yr)	not used	1.000E-03	---	VCV
R013	Density of contaminated zone (g/cm**3)	1.50E+00	1.500E+00	---	DENSCZ
R013	Contaminated zone erosion rate (m/yr)	1.00E-03	1.000E-03	---	VCZ
R013	Contaminated zone total porosity	4.00E-01	4.000E-01	---	TPCZ
R013	Contaminated zone field capacity	2.00E-01	2.000E-01	---	FCCZ
R013	Contaminated zone hydraulic conductivity (m/yr)	1.00E+01	1.000E+01	---	HCCZ
R013	Contaminated zone b parameter	5.30E+00	5.300E+00	---	BCZ
R013	Average annual wind speed (m/sec)	2.00E+00	2.000E+00	---	WIND
R013	Humidity in air (g/m**3)	not used	8.000E+00	---	HUMID
R013	Evapotranspiration coefficient	5.00E-01	5.000E-01	---	EVAPTR
R013	Precipitation (m/yr)	1.00E+00	1.000E+00	---	PRECIP
R013	Irrigation (m/yr)	2.00E-01	2.000E-01	---	RI
R013	Irrigation mode	overhead	overhead	---	IDITCH
R013	Runoff coefficient	2.00E-01	2.000E-01	---	RUNOFF
R013	Watershed area for nearby stream or pond (m**2)	1.00E+06	1.000E+06	---	WAREA
R013	Accuracy for water/soil computations	1.00E-03	1.000E-03	---	EPS
R014	Density of saturated zone (g/cm**3)	1.50E+00	1.500E+00	---	DENSAQ
R014	Saturated zone total porosity	4.00E-01	4.000E-01	---	TPSZ
R014	Saturated zone effective porosity	2.00E-01	2.000E-01	---	EPSZ
R014	Saturated zone field capacity	2.00E-01	2.000E-01	---	FCSZ
R014	Saturated zone hydraulic conductivity (m/yr)	1.00E+02	1.000E+02	---	HCSZ
R014	Saturated zone hydraulic gradient	2.00E-02	2.000E-02	---	HGWT

Site-Specific Parameter Summary (continued)

Menu	Parameter	User Input	Default	Used by RESRAD (If different from user input)	Parameter Name
R014	Saturated zone b parameter	5.300E+00	5.300E+00	---	BSZ
R014	Water table drop rate (m/yr)	1.000E-03	1.000E-03	---	VWT
R014	Well pump intake depth (m below water table)	1.000E+01	1.000E+01	---	DWIBWT
R014	Model: Nondispersion (ND) or Mass-Balance (MB)	ND	ND	---	MODEL
R014	Well pumping rate (m**3/yr)	2.500E+02	2.500E+02	---	UW
R015	Number of unsaturated zone strata	1	1	---	NS
R015	Unsat. zone 1, thickness (m)	4.000E+00	4.000E+00	---	H(1)
R015	Unsat. zone 1, soil density (g/cm**3)	1.500E+00	1.500E+00	---	DENSUZ(1)
R015	Unsat. zone 1, total porosity	4.000E-01	4.000E-01	---	TPUZ(1)
R015	Unsat. zone 1, effective porosity	2.000E-01	2.000E-01	---	EPUZ(1)
R015	Unsat. zone 1, field capacity	2.000E-01	2.000E-01	---	FCUZ(1)
R015	Unsat. zone 1, soil-specific b parameter	5.300E+00	5.300E+00	---	BUZ(1)
R015	Unsat. zone 1, hydraulic conductivity (m/yr)	1.000E+01	1.000E+01	---	HCUZ(1)
R016	Distribution coefficients for Cs-137				
R016	Contaminated zone (cm**3/g)	4.600E+03	4.600E+03	---	DCNUCC(1)
R016	Unsaturated zone 1 (cm**3/g)	4.600E+03	4.600E+03	---	DCNUCU(1,1)
R016	Saturated zone (cm**3/g)	4.600E+03	4.600E+03	---	DCNUCS(1)
R016	Leach rate (/yr)	0.000E+00	0.000E+00	3.623E-05	ALEACH(1)
R016	Solubility constant	0.000E+00	0.000E+00	not used	SOLUBK(1)
R016	Distribution coefficients for Pb-210				
R016	Contaminated zone (cm**3/g)	1.000E+02	1.000E+02	---	DCNUCC(2)
R016	Unsaturated zone 1 (cm**3/g)	1.000E+02	1.000E+02	---	DCNUCU(2,1)
R016	Saturated zone (cm**3/g)	1.000E+02	1.000E+02	---	DCNUCS(2)
R016	Leach rate (/yr)	0.000E+00	0.000E+00	1.663E-03	ALEACH(2)
R016	Solubility constant	0.000E+00	0.000E+00	not used	SOLUBK(2)
R016	Distribution coefficients for Ra-226				
R016	Contaminated zone (cm**3/g)	7.000E+01	7.000E+01	---	DCNUCC(3)
R016	Unsaturated zone 1 (cm**3/g)	7.000E+01	7.000E+01	---	DCNUCU(3,1)
R016	Saturated zone (cm**3/g)	7.000E+01	7.000E+01	---	DCNUCS(3)
R016	Leach rate (/yr)	0.000E+00	0.000E+00	2.374E-03	ALEACH(3)
R016	Solubility constant	0.000E+00	0.000E+00	not used	SOLUBK(3)
R016	Distribution coefficients for Sr-90				
R016	Contaminated zone (cm**3/g)	3.000E+01	3.000E+01	---	DCNUCC(4)
R016	Unsaturated zone 1 (cm**3/g)	3.000E+01	3.000E+01	---	DCNUCU(4,1)
R016	Saturated zone (cm**3/g)	3.000E+01	3.000E+01	---	DCNUCS(4)
R016	Leach rate (/yr)	0.000E+00	0.000E+00	5.516E-03	ALEACH(4)
R016	Solubility constant	0.000E+00	0.000E+00	not used	SOLUBK(4)
R017	Inhalation rate (m**3/yr)	8.400E+03	8.400E+03	---	INHALR
R017	Mass loading for inhalation (g/m**3)	1.000E-04	1.000E-04	---	MLINH
R017	Exposure duration	3.000E+01	3.000E+01	---	ED
R017	Shielding factor, inhalation	4.000E-01	4.000E-01	---	SHF3
R017	Shielding factor, external gamma	7.000E-01	7.000E-01	---	SHF1
R017	Fraction of time spent indoors	5.000E-01	5.000E-01	---	FIND
R017	Fraction of time spent outdoors (on site)	2.500E-01	2.500E-01	---	FOTD

Site-Specific Parameter Summary (continued)

Menu	Parameter	User Input	Default	Used by RESRAD (If different from user input)	Parameter Name
R017	Shape factor flag, external gamma	1.000E+00	1.000E+00	>0 shows circular AREA.	FS
R017	Radii of shape factor array (used if FS = -1):				
R017	Outer annular radius (m), ring 1:	not used	5.000E+01	---	RAD_SHAPE(1)
R017	Outer annular radius (m), ring 2:	not used	7.071E+01	---	RAD_SHAPE(2)
R017	Outer annular radius (m), ring 3:	not used	0.000E+00	---	RAD_SHAPE(3)
R017	Outer annular radius (m), ring 4:	not used	0.000E+00	---	RAD_SHAPE(4)
R017	Outer annular radius (m), ring 5:	not used	0.000E+00	---	RAD_SHAPE(5)
R017	Outer annular radius (m), ring 6:	not used	0.000E+00	---	RAD_SHAPE(6)
R017	Outer annular radius (m), ring 7:	not used	0.000E+00	---	RAD_SHAPE(7)
R017	Outer annular radius (m), ring 8:	not used	0.000E+00	---	RAD_SHAPE(8)
R017	Outer annular radius (m), ring 9:	not used	0.000E+00	---	RAD_SHAPE(9)
R017	Outer annular radius (m), ring 10:	not used	0.000E+00	---	RAD_SHAPE(10)
R017	Outer annular radius (m), ring 11:	not used	0.000E+00	---	RAD_SHAPE(11)
R017	Outer annular radius (m), ring 12:	not used	0.000E+00	---	RAD_SHAPE(12)
R017	Fractions of annular areas within AREA:				
R017	Ring 1	not used	1.000E+00	---	FRACA(1)
R017	Ring 2	not used	2.732E-01	---	FRACA(2)
R017	Ring 3	not used	0.000E+00	---	FRACA(3)
R017	Ring 4	not used	0.000E+00	---	FRACA(4)
R017	Ring 5	not used	0.000E+00	---	FRACA(5)
R017	Ring 6	not used	0.000E+00	---	FRACA(6)
R017	Ring 7	not used	0.000E+00	---	FRACA(7)
R017	Ring 8	not used	0.000E+00	---	FRACA(8)
R017	Ring 9	not used	0.000E+00	---	FRACA(9)
R017	Ring 10	not used	0.000E+00	---	FRACA(10)
R017	Ring 11	not used	0.000E+00	---	FRACA(11)
R017	Ring 12	not used	0.000E+00	---	FRACA(12)
R018	Fruits, vegetables and grain consumption (kg/yr)	1.600E+02	1.600E+02	---	DIET(1)
R018	Leafy vegetable consumption (kg/yr)	1.400E+01	1.400E+01	---	DIET(2)
R018	Milk consumption (L/yr)	9.200E+01	9.200E+01	---	DIET(3)
R018	Meat and poultry consumption (kg/yr)	6.300E+01	6.300E+01	---	DIET(4)
R018	Fish consumption (kg/yr)	5.400E+00	5.400E+00	---	DIET(5)
R018	Other seafood consumption (kg/yr)	9.000E-01	9.000E-01	---	DIET(6)
R018	Soil ingestion rate (g/yr)	3.650E+01	3.650E+01	---	SOIL
R018	Drinking water intake (L/yr)	5.100E+02	5.100E+02	---	DWI
R018	Contamination fraction of drinking water	1.000E+00	1.000E+00	---	FDW
R018	Contamination fraction of household water	not used	1.000E+00	---	FHHW
R018	Contamination fraction of livestock water	1.000E+00	1.000E+00	---	FLW
R018	Contamination fraction of irrigation water	1.000E+00	1.000E+00	---	FIRW
R018	Contamination fraction of aquatic food	5.000E-01	5.000E-01	---	FR9
R018	Contamination fraction of plant food	-1	-1	0.290E+00	FPLANT
R018	Contamination fraction of meat	-1	-1	0.290E-01	FMEAT
R018	Contamination fraction of milk	-1	-1	0.290E-01	FMILK
R019	Livestock fodder intake for meat (kg/day)	6.800E+01	6.800E+01	---	LFI5
R019	Livestock fodder intake for milk (kg/day)	5.500E+01	5.500E+01	---	LFI6
R019	Livestock water intake for meat (L/day)	5.000E+01	5.000E+01	---	LWI5
R019	Livestock water intake for milk (L/day)	1.600E+02	1.600E+02	---	LWI6

Site-Specific Parameter Summary (continued)

Menu	Parameter	User Input	Default	Used by RESRAD (If different from user input)	Parameter Name
R019	Livestock soil intake (kg/day)	5.000E-01	5.000E-01	---	LSI
R019	Mass loading for foliar deposition (g/m**3)	1.000E-04	1.000E-04	---	MLFD
R019	Depth of soil mixing layer (m)	1.500E-01	1.500E-01	---	DM
R019	Depth of roots (m)	9.000E-01	9.000E-01	---	DROOT
R019	Drinking water fraction from ground water	1.000E+00	1.000E+00	---	FGWDW
R019	Household water fraction from ground water	not used	1.000E+00	---	FGWHH
R019	Livestock water fraction from ground water	1.000E+00	1.000E+00	---	FGWLW
R019	Irrigation fraction from ground water	1.000E+00	1.000E+00	---	FGWIR
R19B	Wet weight crop yield for Non-Leafy (kg/m**2)	7.000E-01	7.000E-01	---	YV(1)
R19B	Wet weight crop yield for Leafy (kg/m**2)	1.500E+00	1.500E+00	---	YV(2)
R19B	Wet weight crop yield for Fodder (kg/m**2)	1.100E+00	1.100E+00	---	YV(3)
R19B	Growing Season for Non-Leafy (years)	1.700E-01	1.700E-01	---	TE(1)
R19B	Growing Season for Leafy (years)	2.500E-01	2.500E-01	---	TE(2)
R19B	Growing Season for Fodder (years)	8.000E-02	8.000E-02	---	TE(3)
R19B	Translocation Factor for Non-Leafy	1.000E-01	1.000E-01	---	TIV(1)
R19B	Translocation Factor for Leafy	1.000E+00	1.000E+00	---	TIV(2)
R19B	Translocation Factor for Fodder	1.000E+00	1.000E+00	---	TIV(3)
R19B	Dry Foliar Interception Fraction for Non-Leafy	2.500E-01	2.500E-01	---	RDRY(1)
R19B	Dry Foliar Interception Fraction for Leafy	2.500E-01	2.500E-01	---	RDRY(2)
R19B	Dry Foliar Interception Fraction for Fodder	2.500E-01	2.500E-01	---	RDRY(3)
R19B	Wet Foliar Interception Fraction for Non-Leafy	2.500E-01	2.500E-01	---	RWET(1)
R19B	Wet Foliar Interception Fraction for Leafy	2.500E-01	2.500E-01	---	RWET(2)
R19B	Wet Foliar Interception Fraction for Fodder	2.500E-01	2.500E-01	---	RWET(3)
R19B	Weathering Removal Constant for Vegetation	2.000E+01	2.000E+01	---	WLAM
C14	C-12 concentration in water (g/cm**3)	not used	2.000E-05	---	C12WTR
C14	C-12 concentration in contaminated soil (g/g)	not used	3.000E-02	---	C12CZ
C14	Fraction of vegetation carbon from soil	not used	2.000E-02	---	CSOIL
C14	Fraction of vegetation carbon from air	not used	9.800E-01	---	CAIR
C14	C-14 evasion layer thickness in soil (m)	not used	3.000E-01	---	DMC
C14	C-14 evasion flux rate from soil (1/sec)	not used	7.000E-07	---	EVSN
C14	C-12 evasion flux rate from soil (1/sec)	not used	1.000E-10	---	REVSN
C14	Fraction of grain in beef cattle feed	not used	8.000E-01	---	AVFG4
C14	Fraction of grain in milk cow feed	not used	2.000E-01	---	AVFG5
STOR	Storage times of contaminated foodstuffs (days):				
STOR	Fruits, non-leafy vegetables, and grain	1.400E+01	1.400E+01	---	STOR_T(1)
STOR	Leafy vegetables	1.000E+00	1.000E+00	---	STOR_T(2)
STOR	Milk	1.000E+00	1.000E+00	---	STOR_T(3)
STOR	Meat and poultry	2.000E+01	2.000E+01	---	STOR_T(4)
STOR	Fish	7.000E+00	7.000E+00	---	STOR_T(5)
STOR	Crustacea and mollusks	7.000E+00	7.000E+00	---	STOR_T(6)
STOR	Well water	1.000E+00	1.000E+00	---	STOR_T(7)
STOR	Surface water	1.000E+00	1.000E+00	---	STOR_T(8)
STOR	Livestock fodder	4.500E+01	4.500E+01	---	STOR_T(9)
R021	Thickness of building foundation (m)	not used	1.500E-01	---	FLOOR1
R021	Bulk density of building foundation (g/cm**3)	not used	2.400E+00	---	DENSFL
R021	Total porosity of the cover material	not used	4.000E-01	---	TPCV

Site-Specific Parameter Summary (continued)

Menu	Parameter	User Input	Default	Used by RESRAD (If different from user input)	Parameter Name
R021	Total porosity of the building foundation	not used	1.000E-01	---	TPFL
R021	Volumetric water content of the cover material	not used	5.000E-02	---	PH2OCV
R021	Volumetric water content of the foundation	not used	3.000E-02	---	PH2OFL
R021	Diffusion coefficient for radon gas (m/sec):				
R021	in cover material	not used	2.000E-06	---	DIFCV
R021	in foundation material	not used	3.000E-07	---	DIFFL
R021	in contaminated zone soil	not used	2.000E-06	---	DIFCZ
R021	Radon vertical dimension of mixing (m)	not used	2.000E+00	---	HMIX
R021	Average building air exchange rate (1/hr)	not used	5.000E-01	---	REXG
R021	Height of the building (room) (m)	not used	2.500E+00	---	HRM
R021	Building interior area factor	not used	0.000E+00	---	FAI
R021	Building depth below ground surface (m)	not used	-1.000E+00	---	DMFL
R021	Emanating power of Rn-222 gas	not used	2.500E-01	---	EMANA(1)
R021	Emanating power of Rn-220 gas	not used	1.500E-01	---	EMANA(2)
TITL	Number of graphical time points	32	---	---	NPTS
TITL	Maximum number of integration points for dose	17	---	---	LYMAX
TITL	Maximum number of integration points for risk	257	---	---	KYMAX

Summary of Pathway Selections

Pathway	User Selection
1 -- external gamma	active
2 -- inhalation (w/o radon)	active
3 -- plant ingestion	active
4 -- meat ingestion	active
5 -- milk ingestion	active
6 -- aquatic foods	active
7 -- drinking water	active
8 -- soil ingestion	active
9 -- radon	suppressed
Find peak pathway doses	suppressed

Contaminated Zone Dimensions		Initial Soil Concentrations, pCi/g	
Area:	579.00 square meters	Cs-137	5.000E-02
Thickness:	2.00 meters	Pb-210	2.340E-01
Cover Depth:	0.00 meters	Ra-226	2.340E-01
		Sr-90	2.250E-01

Total Dose TDOSE(t), mrem/yr
Basic Radiation Dose Limit = 2.500E+01 mrem/yr
Total Mixture Sum M(t) = Fraction of Basic Dose Limit Received at Time (t)

t (years):	0.000E+00	1.000E+00	3.000E+00	1.000E+01	3.000E+01	1.000E+02	3.000E+02	1.000E+03
TDOSE(t):	3.530E+00	3.506E+00	3.458E+00	3.305E+00	2.957E+00	2.257E+00	1.267E+00	1.988E+00
M(t):	1.412E-01	1.402E-01	1.383E-01	1.322E-01	1.183E-01	9.030E-02	5.069E-02	7.952E-02

Maximum TDOSE(t): 3.530E+00 mrem/yr at t = 0.000E+00 years

Total Dose Contributions TDOSE(i,p,t) for Individual Radionuclides (i) and Pathways (p)
As mrem/yr and Fraction of Total Dose At t = 0.000E+00 years

Water Independent Pathways (Inhalation excludes radon)

Radio-	Ground		Inhalation		Radon		Plant		Meat		Milk		Soil	
Nuclide	mrem/yr	fract.	mrem/yr	fract.	mrem/yr	fract.	mrem/yr	fract.	mrem/yr	fract.	mrem/yr	fract.	mrem/yr	fract.
Cs-137	8.843E-02	0.0251	7.503E-08	0.0000	0.000E+00	0.0000	4.980E-03	0.0014	4.354E-04	0.0001	1.422E-04	0.0000	3.917E-05	0.0000
Pb-210	7.584E-04	0.0002	2.541E-04	0.0001	0.000E+00	0.0000	8.439E-01	0.2391	2.885E-03	0.0008	1.406E-03	0.0004	2.655E-02	0.0075
Ra-226	1.384E+00	0.3921	9.954E-05	0.0000	0.000E+00	0.0000	6.376E-01	0.1806	1.885E-03	0.0005	2.250E-03	0.0006	5.307E-03	0.0015
Sr-90	2.879E-03	0.0008	1.381E-05	0.0000	0.000E+00	0.0000	5.121E-01	0.1451	1.034E-02	0.0029	3.070E-03	0.0009	5.370E-04	0.0002
Total	1.476E+00	0.4182	3.675E-04	0.0001	0.000E+00	0.0000	1.999E+00	0.5662	1.555E-02	0.0044	6.868E-03	0.0019	3.243E-02	0.0092

Total Dose Contributions TDOSE(i,p,t) for Individual Radionuclides (i) and Pathways (p)
As mrem/yr and Fraction of Total Dose At t = 0.000E+00 years

Water Dependent Pathways

Radio-	Water		Fish		Radon		Plant		Meat		Milk		All Pathways*	
Nuclide	mrem/yr	fract.	mrem/yr	fract.	mrem/yr	fract.	mrem/yr	fract.	mrem/yr	fract.	mrem/yr	fract.	mrem/yr	fract.
Cs-137	0.000E+00	0.0000	0.000E+00	0.0000	0.000E+00	0.0000	0.000E+00	0.0000	0.000E+00	0.0000	0.000E+00	0.0000	9.403E-02	0.0266
Pb-210	0.000E+00	0.0000	0.000E+00	0.0000	0.000E+00	0.0000	0.000E+00	0.0000	0.000E+00	0.0000	0.000E+00	0.0000	8.758E-01	0.2481
Ra-226	0.000E+00	0.0000	0.000E+00	0.0000	0.000E+00	0.0000	0.000E+00	0.0000	0.000E+00	0.0000	0.000E+00	0.0000	2.031E+00	0.5754
Sr-90	0.000E+00	0.0000	0.000E+00	0.0000	0.000E+00	0.0000	0.000E+00	0.0000	0.000E+00	0.0000	0.000E+00	0.0000	5.289E-01	0.1498
Total	0.000E+00	0.0000	0.000E+00	0.0000	0.000E+00	0.0000	0.000E+00	0.0000	0.000E+00	0.0000	0.000E+00	0.0000	3.530E+00	1.0000

*Sum of all water independent and dependent pathways.

Total Dose Contributions TDOSE(i,p,t) for Individual Radionuclides (i) and Pathways (p)
As mrem/yr and Fraction of Total Dose At t = 1.000E+00 years

Water Independent Pathways (Inhalation excludes radon)

Radio-	Ground		Inhalation		Radon		Plant		Meat		Milk		Soil	
Nuclide	mrem/yr	fract.	mrem/yr	fract.	mrem/yr	fract.	mrem/yr	fract.	mrem/yr	fract.	mrem/yr	fract.	mrem/yr	fract.
Cs-137	8.641E-02	0.0246	7.332E-08	0.0000	0.000E+00	0.0000	4.866E-03	0.0014	4.255E-04	0.0001	1.389E-04	0.0000	3.827E-05	0.0000
Pb-210	7.340E-04	0.0002	2.459E-04	0.0001	0.000E+00	0.0000	8.167E-01	0.2330	2.792E-03	0.0008	1.360E-03	0.0004	2.570E-02	0.0073
Ra-226	1.380E+00	0.3937	1.070E-04	0.0000	0.000E+00	0.0000	6.620E-01	0.1888	1.973E-03	0.0006	2.288E-03	0.0007	6.103E-03	0.0017
Sr-90	2.796E-03	0.0008	1.341E-05	0.0000	0.000E+00	0.0000	4.973E-01	0.1419	1.004E-02	0.0029	2.982E-03	0.0009	5.215E-04	0.0001
Total	1.470E+00	0.4194	3.664E-04	0.0001	0.000E+00	0.0000	1.981E+00	0.5650	1.523E-02	0.0043	6.769E-03	0.0019	3.236E-02	0.0092

Total Dose Contributions TDOSE(i,p,t) for Individual Radionuclides (i) and Pathways (p)
As mrem/yr and Fraction of Total Dose At t = 1.000E+00 years

Water Dependent Pathways

Radio-	Water		Fish		Radon		Plant		Meat		Milk		All Pathways*	
Nuclide	mrem/yr	fract.	mrem/yr	fract.	mrem/yr	fract.	mrem/yr	fract.	mrem/yr	fract.	mrem/yr	fract.	mrem/yr	fract.
Cs-137	0.000E+00	0.0000	0.000E+00	0.0000	0.000E+00	0.0000	0.000E+00	0.0000	0.000E+00	0.0000	0.000E+00	0.0000	9.188E-02	0.0262
Pb-210	0.000E+00	0.0000	0.000E+00	0.0000	0.000E+00	0.0000	0.000E+00	0.0000	0.000E+00	0.0000	0.000E+00	0.0000	8.476E-01	0.2418
Ra-226	0.000E+00	0.0000	0.000E+00	0.0000	0.000E+00	0.0000	0.000E+00	0.0000	0.000E+00	0.0000	0.000E+00	0.0000	2.053E+00	0.5855
Sr-90	0.000E+00	0.0000	0.000E+00	0.0000	0.000E+00	0.0000	0.000E+00	0.0000	0.000E+00	0.0000	0.000E+00	0.0000	5.137E-01	0.1465
Total	0.000E+00	0.0000	0.000E+00	0.0000	0.000E+00	0.0000	0.000E+00	0.0000	0.000E+00	0.0000	0.000E+00	0.0000	3.506E+00	1.0000

*Sum of all water independent and dependent pathways.

Total Dose Contributions TDOSE(i,p,t) for Individual Radionuclides (i) and Pathways (p)
As mrem/yr and Fraction of Total Dose At t = 3.000E+00 years

Water Independent Pathways (Inhalation excludes radon)

Radio-	Ground		Inhalation		Radon		Plant		Meat		Milk		Soil	
Nuclide	mrem/yr	fract.	mrem/yr	fract.	mrem/yr	fract.	mrem/yr	fract.	mrem/yr	fract.	mrem/yr	fract.	mrem/yr	fract.
Cs-137	8.250E-02	0.0239	7.000E-08	0.0000	0.000E+00	0.0000	4.646E-03	0.0013	4.062E-04	0.0001	1.326E-04	0.0000	3.654E-05	0.0000
Pb-210	6.875E-04	0.0002	2.303E-04	0.0001	0.000E+00	0.0000	7.650E-01	0.2212	2.615E-03	0.0008	1.274E-03	0.0004	2.407E-02	0.0070
Ra-226	1.373E+00	0.3969	1.212E-04	0.0000	0.000E+00	0.0000	7.073E-01	0.2045	2.129E-03	0.0006	2.357E-03	0.0007	7.610E-03	0.0022
Sr-90	2.636E-03	0.0008	1.264E-05	0.0000	0.000E+00	0.0000	4.690E-01	0.1356	9.471E-03	0.0027	2.812E-03	0.0008	4.918E-04	0.0001
Total	1.458E+00	0.4218	3.642E-04	0.0001	0.000E+00	0.0000	1.946E+00	0.5627	1.462E-02	0.0042	6.576E-03	0.0019	3.220E-02	0.0093

Total Dose Contributions TDOSE(i,p,t) for Individual Radionuclides (i) and Pathways (p)
As mrem/yr and Fraction of Total Dose At t = 3.000E+00 years

Water Dependent Pathways

Radio-	Water		Fish		Radon		Plant		Meat		Milk		All Pathways*	
Nuclide	mrem/yr	fract.	mrem/yr	fract.	mrem/yr	fract.	mrem/yr	fract.	mrem/yr	fract.	mrem/yr	fract.	mrem/yr	fract.
Cs-137	0.000E+00	0.0000	0.000E+00	0.0000	0.000E+00	0.0000	0.000E+00	0.0000	0.000E+00	0.0000	0.000E+00	0.0000	8.772E-02	0.0254
Pb-210	0.000E+00	0.0000	0.000E+00	0.0000	0.000E+00	0.0000	0.000E+00	0.0000	0.000E+00	0.0000	0.000E+00	0.0000	7.938E-01	0.2296
Ra-226	0.000E+00	0.0000	0.000E+00	0.0000	0.000E+00	0.0000	0.000E+00	0.0000	0.000E+00	0.0000	0.000E+00	0.0000	2.092E+00	0.6050
Sr-90	0.000E+00	0.0000	0.000E+00	0.0000	0.000E+00	0.0000	0.000E+00	0.0000	0.000E+00	0.0000	0.000E+00	0.0000	4.844E-01	0.1401
Total	0.000E+00	0.0000	0.000E+00	0.0000	0.000E+00	0.0000	0.000E+00	0.0000	0.000E+00	0.0000	0.000E+00	0.0000	3.458E+00	1.0000

*Sum of all water independent and dependent pathways.

Total Dose Contributions TDOSE(i,p,t) for Individual Radionuclides (i) and Pathways (p)
As mrem/yr and Fraction of Total Dose At t = 1.000E+01 years

Water Independent Pathways (Inhalation excludes radon)

Radio-	Ground		Inhalation		Radon		Plant		Meat		Milk		Soil	
Nuclide	mrem/yr	fract.	mrem/yr	fract.	mrem/yr	fract.	mrem/yr	fract.	mrem/yr	fract.	mrem/yr	fract.	mrem/yr	fract.
Cs-137	7.016E-02	0.0212	5.953E-08	0.0000	0.000E+00	0.0000	3.951E-03	0.0012	3.455E-04	0.0001	1.128E-04	0.0000	3.108E-05	0.0000
Pb-210	5.466E-04	0.0002	1.832E-04	0.0001	0.000E+00	0.0000	6.083E-01	0.1841	2.080E-03	0.0006	1.013E-03	0.0003	1.914E-02	0.0058
Ra-226	1.346E+00	0.4073	1.632E-04	0.0000	0.000E+00	0.0000	8.408E-01	0.2544	2.591E-03	0.0008	2.557E-03	0.0008	1.209E-02	0.0037
Sr-90	2.147E-03	0.0006	1.030E-05	0.0000	0.000E+00	0.0000	3.820E-01	0.1156	7.714E-03	0.0023	2.290E-03	0.0007	4.005E-04	0.0001
Total	1.419E+00	0.4294	3.567E-04	0.0001	0.000E+00	0.0000	1.835E+00	0.5553	1.273E-02	0.0039	5.973E-03	0.0018	3.166E-02	0.0096

Total Dose Contributions TDOSE(i,p,t) for Individual Radionuclides (i) and Pathways (p)
As mrem/yr and Fraction of Total Dose At t = 1.000E+01 years

Water Dependent Pathways

Radio-	Water		Fish		Radon		Plant		Meat		Milk		All Pathways*	
Nuclide	mrem/yr	fract.	mrem/yr	fract.	mrem/yr	fract.	mrem/yr	fract.	mrem/yr	fract.	mrem/yr	fract.	mrem/yr	fract.
Cs-137	0.000E+00	0.0000	0.000E+00	0.0000	0.000E+00	0.0000	0.000E+00	0.0000	0.000E+00	0.0000	0.000E+00	0.0000	7.460E-02	0.0226
Pb-210	0.000E+00	0.0000	0.000E+00	0.0000	0.000E+00	0.0000	0.000E+00	0.0000	0.000E+00	0.0000	0.000E+00	0.0000	6.312E-01	0.1910
Ra-226	0.000E+00	0.0000	0.000E+00	0.0000	0.000E+00	0.0000	0.000E+00	0.0000	0.000E+00	0.0000	0.000E+00	0.0000	2.204E+00	0.6670
Sr-90	0.000E+00	0.0000	0.000E+00	0.0000	0.000E+00	0.0000	0.000E+00	0.0000	0.000E+00	0.0000	0.000E+00	0.0000	3.945E-01	0.1194
Total	0.000E+00	0.0000	0.000E+00	0.0000	0.000E+00	0.0000	0.000E+00	0.0000	0.000E+00	0.0000	0.000E+00	0.0000	3.305E+00	1.0000

*Sum of all water independent and dependent pathways.

Total Dose Contributions TDOSE(i,p,t) for Individual Radionuclides (i) and Pathways (p)
As mrem/yr and Fraction of Total Dose At t = 3.000E+01 years

Water Independent Pathways (Inhalation excludes radon)

Radio-	Ground		Inhalation		Radon		Plant		Meat		Milk		Soil	
Nuclide	mrem/yr	fract.	mrem/yr	fract.	mrem/yr	fract.	mrem/yr	fract.	mrem/yr	fract.	mrem/yr	fract.	mrem/yr	fract.
Cs-137	4.417E-02	0.0149	3.748E-08	0.0000	0.000E+00	0.0000	2.487E-03	0.0008	2.175E-04	0.0001	7.101E-05	0.0000	1.956E-05	0.0000
Pb-210	2.840E-04	0.0001	9.515E-05	0.0000	0.000E+00	0.0000	3.160E-01	0.1068	1.080E-03	0.0004	5.264E-04	0.0002	9.941E-03	0.0034
Ra-226	1.273E+00	0.4304	2.352E-04	0.0001	0.000E+00	0.0000	1.064E+00	0.3597	3.369E-03	0.0011	2.865E-03	0.0010	1.990E-02	0.0067
Sr-90	1.195E-03	0.0004	5.729E-06	0.0000	0.000E+00	0.0000	2.125E-01	0.0719	4.291E-03	0.0015	1.274E-03	0.0004	2.228E-04	0.0001
Total	1.318E+00	0.4458	3.362E-04	0.0001	0.000E+00	0.0000	1.595E+00	0.5393	8.959E-03	0.0030	4.736E-03	0.0016	3.008E-02	0.0102

Total Dose Contributions TDOSE(i,p,t) for Individual Radionuclides (i) and Pathways (p)
As mrem/yr and Fraction of Total Dose At t = 3.000E+01 years

Water Dependent Pathways

Radio-	Water		Fish		Radon		Plant		Meat		Milk		All Pathways*	
Nuclide	mrem/yr	fract.	mrem/yr	fract.	mrem/yr	fract.	mrem/yr	fract.	mrem/yr	fract.	mrem/yr	fract.	mrem/yr	fract.
Cs-137	0.000E+00	0.0000	0.000E+00	0.0000	0.000E+00	0.0000	0.000E+00	0.0000	0.000E+00	0.0000	0.000E+00	0.0000	4.696E-02	0.0159
Pb-210	0.000E+00	0.0000	0.000E+00	0.0000	0.000E+00	0.0000	0.000E+00	0.0000	0.000E+00	0.0000	0.000E+00	0.0000	3.279E-01	0.1109
Ra-226	0.000E+00	0.0000	0.000E+00	0.0000	0.000E+00	0.0000	0.000E+00	0.0000	0.000E+00	0.0000	0.000E+00	0.0000	2.363E+00	0.7990
Sr-90	0.000E+00	0.0000	0.000E+00	0.0000	0.000E+00	0.0000	0.000E+00	0.0000	0.000E+00	0.0000	0.000E+00	0.0000	2.195E-01	0.0742
Total	0.000E+00	0.0000	0.000E+00	0.0000	0.000E+00	0.0000	0.000E+00	0.0000	0.000E+00	0.0000	0.000E+00	0.0000	2.957E+00	1.0000

*Sum of all water independent and dependent pathways.

Total Dose Contributions TDOSE(i,p,t) for Individual Radionuclides (i) and Pathways (p)
As mrem/yr and Fraction of Total Dose At t = 1.000E+02 years

Water Independent Pathways (Inhalation excludes radon)

Radio-	Ground		Inhalation		Radon		Plant		Meat		Milk		Soil	
Nuclide	mrem/yr	fract.	mrem/yr	fract.	mrem/yr	fract.	mrem/yr	fract.	mrem/yr	fract.	mrem/yr	fract.	mrem/yr	fract.
Cs-137	8.742E-03	0.0039	7.417E-09	0.0000	0.000E+00	0.0000	4.923E-04	0.0002	4.304E-05	0.0000	1.406E-05	0.0000	3.872E-06	0.0000
Pb-210	2.869E-05	0.0000	9.614E-06	0.0000	0.000E+00	0.0000	3.193E-02	0.0141	1.092E-04	0.0000	5.318E-05	0.0000	1.004E-03	0.0004
Ra-226	1.046E+00	0.4634	2.645E-04	0.0001	0.000E+00	0.0000	1.110E+00	0.4919	3.576E-03	0.0016	2.748E-03	0.0012	2.378E-02	0.0105
Sr-90	1.534E-04	0.0001	7.358E-07	0.0000	0.000E+00	0.0000	2.729E-02	0.0121	5.512E-04	0.0002	1.636E-04	0.0001	2.862E-05	0.0000
Total	1.055E+00	0.4673	2.748E-04	0.0001	0.000E+00	0.0000	1.170E+00	0.5184	4.280E-03	0.0019	2.979E-03	0.0013	2.482E-02	0.0110

Total Dose Contributions TDOSE(i,p,t) for Individual Radionuclides (i) and Pathways (p)
As mrem/yr and Fraction of Total Dose At t = 1.000E+02 years

Water Dependent Pathways

Radio-	Water		Fish		Radon		Plant		Meat		Milk		All Pathways*	
Nuclide	mrem/yr	fract.	mrem/yr	fract.	mrem/yr	fract.	mrem/yr	fract.	mrem/yr	fract.	mrem/yr	fract.	mrem/yr	fract.
Cs-137	0.000E+00	0.0000	0.000E+00	0.0000	0.000E+00	0.0000	0.000E+00	0.0000	0.000E+00	0.0000	0.000E+00	0.0000	9.295E-03	0.0041
Pb-210	0.000E+00	0.0000	0.000E+00	0.0000	0.000E+00	0.0000	0.000E+00	0.0000	0.000E+00	0.0000	0.000E+00	0.0000	3.313E-02	0.0147
Ra-226	0.000E+00	0.0000	0.000E+00	0.0000	0.000E+00	0.0000	0.000E+00	0.0000	0.000E+00	0.0000	0.000E+00	0.0000	2.187E+00	0.9687
Sr-90	0.000E+00	0.0000	0.000E+00	0.0000	0.000E+00	0.0000	0.000E+00	0.0000	0.000E+00	0.0000	0.000E+00	0.0000	2.819E-02	0.0125
Total	0.000E+00	0.0000	0.000E+00	0.0000	0.000E+00	0.0000	0.000E+00	0.0000	0.000E+00	0.0000	0.000E+00	0.0000	2.257E+00	1.0000

*Sum of all water independent and dependent pathways.

Total Dose Contributions TDOSE(i,p,t) for Individual Radionuclides (i) and Pathways (p)
As mrem/yr and Fraction of Total Dose At t = 3.000E+02 years

Water Independent Pathways (Inhalation excludes radon)

Radio-	Ground		Inhalation		Radon		Plant		Meat		Milk		Soil	
Nuclide	mrem/yr	fract.	mrem/yr	fract.	mrem/yr	fract.	mrem/yr	fract.	mrem/yr	fract.	mrem/yr	fract.	mrem/yr	fract.
Cs-137	8.542E-05	0.0001	7.248E-11	0.0000	0.000E+00	0.0000	4.810E-06	0.0000	4.206E-07	0.0000	1.373E-07	0.0000	3.784E-08	0.0000
Pb-210	4.107E-08	0.0000	1.376E-08	0.0000	0.000E+00	0.0000	4.570E-05	0.0000	1.562E-07	0.0000	7.612E-08	0.0000	1.438E-06	0.0000
Ra-226	5.967E-01	0.4708	1.565E-04	0.0001	0.000E+00	0.0000	6.523E-01	0.5147	2.105E-03	0.0017	1.599E-03	0.0013	1.416E-02	0.0112
Sr-90	4.358E-07	0.0000	2.090E-09	0.0000	0.000E+00	0.0000	7.752E-05	0.0001	1.565E-06	0.0000	4.647E-07	0.0000	8.129E-08	0.0000
Total	5.968E-01	0.4709	1.565E-04	0.0001	0.000E+00	0.0000	6.524E-01	0.5148	2.107E-03	0.0017	1.599E-03	0.0013	1.416E-02	0.0112

Total Dose Contributions TDOSE(i,p,t) for Individual Radionuclides (i) and Pathways (p)
As mrem/yr and Fraction of Total Dose At t = 3.000E+02 years

Water Dependent Pathways

Radio-	Water		Fish		Radon		Plant		Meat		Milk		All Pathways*	
Nuclide	mrem/yr	fract.	mrem/yr	fract.	mrem/yr	fract.	mrem/yr	fract.	mrem/yr	fract.	mrem/yr	fract.	mrem/yr	fract.
Cs-137	0.000E+00	0.0000	0.000E+00	0.0000	0.000E+00	0.0000	0.000E+00	0.0000	0.000E+00	0.0000	0.000E+00	0.0000	9.083E-05	0.0001
Pb-210	0.000E+00	0.0000	0.000E+00	0.0000	0.000E+00	0.0000	0.000E+00	0.0000	0.000E+00	0.0000	0.000E+00	0.0000	4.742E-05	0.0000
Ra-226	0.000E+00	0.0000	0.000E+00	0.0000	0.000E+00	0.0000	0.000E+00	0.0000	0.000E+00	0.0000	0.000E+00	0.0000	1.267E+00	0.9998
Sr-90	7.817E-05	0.0001	3.054E-08	0.0000	0.000E+00	0.0000	3.751E-06	0.0000	3.897E-07	0.0000	2.127E-07	0.0000	1.626E-04	0.0001
Total	7.817E-05	0.0001	3.054E-08	0.0000	0.000E+00	0.0000	3.751E-06	0.0000	3.897E-07	0.0000	2.127E-07	0.0000	1.267E+00	1.0000

*Sum of all water independent and dependent pathways.

Total Dose Contributions TDOSE(i,p,t) for Individual Radionuclides (i) and Pathways (p)
As mrem/yr and Fraction of Total Dose At t = 1.000E+03 years

Water Independent Pathways (Inhalation excludes radon)

Radio-	Ground		Inhalation		Radon		Plant		Meat		Milk		Soil	
Nuclide	mrem/yr	fract.	mrem/yr	fract.	mrem/yr	fract.	mrem/yr	fract.	mrem/yr	fract.	mrem/yr	fract.	mrem/yr	fract.
Cs-137	7.880E-12	0.0000	6.686E-18	0.0000	0.000E+00	0.0000	4.437E-13	0.0000	3.880E-14	0.0000	1.267E-14	0.0000	3.491E-15	0.0000
Pb-210	4.555E-18	0.0000	1.526E-18	0.0000	0.000E+00	0.0000	5.069E-15	0.0000	1.733E-17	0.0000	8.444E-18	0.0000	1.595E-16	0.0000
Ra-226	8.364E-02	0.0421	2.194E-05	0.0000	0.000E+00	0.0000	9.144E-02	0.0460	2.950E-04	0.0001	2.241E-04	0.0001	1.985E-03	0.0010
Sr-90	5.321E-16	0.0000	2.552E-18	0.0000	0.000E+00	0.0000	9.465E-14	0.0000	1.912E-15	0.0000	5.675E-16	0.0000	9.926E-17	0.0000
Total	8.364E-02	0.0421	2.194E-05	0.0000	0.000E+00	0.0000	9.144E-02	0.0460	2.950E-04	0.0001	2.241E-04	0.0001	1.985E-03	0.0010

Total Dose Contributions TDOSE(i,p,t) for Individual Radionuclides (i) and Pathways (p)
As mrem/yr and Fraction of Total Dose At t = 1.000E+03 years

Water Dependent Pathways

Radio-	Water		Fish		Radon		Plant		Meat		Milk		All Pathways*	
Nuclide	mrem/yr	fract.	mrem/yr	fract.	mrem/yr	fract.	mrem/yr	fract.	mrem/yr	fract.	mrem/yr	fract.	mrem/yr	fract.
Cs-137	0.000E+00	0.0000	0.000E+00	0.0000	0.000E+00	0.0000	0.000E+00	0.0000	0.000E+00	0.0000	0.000E+00	0.0000	8.379E-12	0.0000
Pb-210	3.451E-14	0.0000	5.569E-17	0.0000	0.000E+00	0.0000	1.540E-15	0.0000	1.711E-17	0.0000	1.404E-17	0.0000	4.140E-14	0.0000
Ra-226	1.729E+00	0.8696	2.382E-03	0.0012	0.000E+00	0.0000	7.730E-02	0.0389	9.033E-04	0.0005	1.041E-03	0.0005	1.988E+00	1.0000
Sr-90	3.608E-13	0.0000	1.410E-16	0.0000	0.000E+00	0.0000	1.732E-14	0.0000	1.802E-15	0.0000	9.826E-16	0.0000	4.788E-13	0.0000
Total	1.729E+00	0.8696	2.382E-03	0.0012	0.000E+00	0.0000	7.730E-02	0.0389	9.033E-04	0.0005	1.041E-03	0.0005	1.988E+00	1.0000

*Sum of all water independent and dependent pathways.

Dose/Source Ratios Summed Over All Pathways
Parent and Progeny Principal Radionuclide Contributions Indicated

Parent (i)	Product (j)	Thread Fraction	DSR(j,t) At Time in Years (mrem/yr)/(pCi/g) 0.000E+00	1.000E+00	3.000E+00	1.000E+01	3.000E+01	1.000E+02	3.000E+02	1.000E+03
Cs-137+D	Cs-137+D	1.000E+00	1.881E+00	1.838E+00	1.754E+00	1.492E+00	9.393E-01	1.859E-01	1.817E-03	1.676E-10
Pb-210+D	Pb-210+D	1.000E+00	3.743E+00	3.622E+00	3.392E+00	2.698E+00	1.401E+00	1.416E-01	2.027E-04	1.769E-13
Ra-226+D	Ra-226+D	1.000E+00	8.612E+00	8.588E+00	8.540E+00	8.374E+00	7.916E+00	6.504E+00	3.710E+00	2.109E+00
Ra-226+D	Pb-210+D	1.000E+00	6.891E-02	1.848E-01	4.011E-01	1.046E+00	2.182E+00	2.841E+00	1.704E+00	6.388E+00
Ra-226+D	∑DSR(j)		8.681E+00	8.773E+00	8.941E+00	9.420E+00	1.010E+01	9.345E+00	5.414E+00	8.496E+00
Sr-90+D	Sr-90+D	1.000E+00	2.351E+00	2.283E+00	2.153E+00	1.753E+00	9.755E-01	1.253E-01	7.227E-04	2.128E-12

The DSR includes contributions from associated (half-life ≤ 180 days) daughters.

Single Radionuclide Soil Guidelines G(i,t) in pCi/g
Basic Radiation Dose Limit = 2.500E+01 mrem/yr

Nuclide (i)	t= 0.000E+00	1.000E+00	3.000E+00	1.000E+01	3.000E+01	1.000E+02	3.000E+02	1.000E+03
Cs-137	1.329E+01	1.361E+01	1.425E+01	1.676E+01	2.662E+01	1.345E+02	1.376E+04	1.492E+11
Pb-210	6.680E+00	6.902E+00	7.369E+00	9.268E+00	1.784E+01	1.766E+02	1.234E+05	*7.634E+13
Ra-226	2.880E+00	2.850E+00	2.796E+00	2.654E+00	2.476E+00	2.675E+00	4.617E+00	2.943E+00
Sr-90	1.063E+01	1.095E+01	1.161E+01	1.426E+01	2.563E+01	1.995E+02	3.459E+04	1.175E+13

*At specific activity limit

Summed Dose/Source Ratios DSR(i,t) in (mrem/yr)/(pCi/g)
and Single Radionuclide Soil Guidelines G(i,t) in pCi/g
at tmin = time of minimum single radionuclide soil guideline
and at tmax = time of maximum total dose = 0.000E+00 years

Nuclide (i)	Initial (pCi/g)	tmin (years)	DSR(i,tmin)	G(i,tmin) (pCi/g)	DSR(i,tmax)	G(i,tmax) (pCi/g)
Cs-137	5.000E-02	0.000E+00	1.881E+00	1.329E+01	1.881E+00	1.329E+01
Pb-210	2.340E-01	0.000E+00	3.743E+00	6.680E+00	3.743E+00	6.680E+00
Ra-226	2.340E-01	42.85 ± 0.09	1.019E+01	2.454E+00	8.681E+00	2.880E+00
Sr-90	2.250E-01	0.000E+00	2.351E+00	1.063E+01	2.351E+00	1.063E+01

Individual Nuclide Dose Summed Over All Pathways
Parent Nuclide and Branch Fraction Indicated

Nuclide (j)	Parent (i)	THF(i)	DOSE(j,t), mrem/yr t= 0.000E+00	1.000E+00	3.000E+00	1.000E+01	3.000E+01	1.000E+02	3.000E+02	1.000E+03
Cs-137	Cs-137	1.000E+00	9.403E-02	9.188E-02	8.772E-02	7.460E-02	4.696E-02	9.295E-03	9.083E-05	8.379E-12
Pb-210	Pb-210	1.000E+00	8.758E-01	8.476E-01	7.938E-01	6.312E-01	3.279E-01	3.313E-02	4.742E-05	4.140E-14
Pb-210	Ra-226	1.000E+00	1.612E-02	4.324E-02	9.386E-02	2.448E-01	5.106E-01	6.648E-01	3.988E-01	1.495E+00
Pb-210	∑DOSE(j)		8.919E-01	8.908E-01	8.877E-01	8.760E-01	8.385E-01	6.979E-01	3.988E-01	1.495E+00
Ra-226	Ra-226	1.000E+00	2.015E+00	2.010E+00	1.998E+00	1.959E+00	1.852E+00	1.522E+00	8.682E-01	4.934E-01
Sr-90	Sr-90	1.000E+00	5.289E-01	5.137E-01	4.844E-01	3.945E-01	2.195E-01	2.819E-02	1.626E-04	4.788E-13

THF(i) is the thread fraction of the parent nuclide.

Individual Nuclide Soil Concentration
Parent Nuclide and Branch Fraction Indicated

Nuclide (j)	Parent (i)	THF(i)	S(j,t), pCi/g t= 0.000E+00	1.000E+00	3.000E+00	1.000E+01	3.000E+01	1.000E+02	3.000E+02	1.000E+03
Cs-137	Cs-137	1.000E+00	5.000E-02	4.886E-02	4.665E-02	3.967E-02	2.497E-02	4.943E-03	4.830E-05	4.456E-12
Pb-210	Pb-210	1.000E+00	2.340E-01	2.265E-01	2.121E-01	1.687E-01	8.761E-02	8.853E-03	1.267E-05	1.406E-15
Pb-210	Ra-226	1.000E+00	0.000E+00	7.145E-03	2.069E-02	6.112E-02	1.324E-01	1.743E-01	1.046E-01	1.467E-02
Pb-210	∑S(j):		2.340E-01	2.336E-01	2.328E-01	2.298E-01	2.200E-01	1.831E-01	1.047E-01	1.467E-02
Ra-226	Ra-226	1.000E+00	2.340E-01	2.333E-01	2.320E-01	2.275E-01	2.151E-01	1.767E-01	1.008E-01	1.413E-02
Sr-90	Sr-90	1.000E+00	2.250E-01	2.185E-01	2.061E-01	1.678E-01	9.337E-02	1.199E-02	3.406E-05	4.159E-14

THF(i) is the thread fraction of the parent nuclide.

RESCALC.EXE execution time = 2.23 seconds

Table of Contents

Part III: Intake Quantities and Health Risk Factors

Cancer Risk Slope Factors 2
Risk Slope and ETFG for the Ground Pathway 3
Amount of Intake Quantities and Excess Cancer Risks
Time= 0.000E+00 4
Time= 1.000E+00 7
Time= 3.000E+00 10
Time= 1.000E+01 13
Time= 3.000E+01 16
Time= 1.000E+02 19
Time= 3.000E+02 22
Time= 1.000E+03 25

Intrisk : RESRAD Default Parameters
File : C:\RESRAD_FAMILY\RESRAD\6.5\USERFILES\PARCEL G SURVEY UNIT 119 TRENCH MDA.RAD

Cancer Risk Slope Factors Summary Table
Risk Library: FGR 13 Morbidity

Menu	Parameter	Current Value	Base Case*	Parameter Name
Sf-1	Ground external radiation slope factors, 1/yr per (pCi/g):			
Sf-1	Cs-137+D	2.55E-06	5.32E-10	SLPF(1,1)
Sf-1	Pb-210+D	4.21E-09	1.41E-09	SLPF(2,1)
Sf-1	Ra-226+D	8.49E-06	2.29E-08	SLPF(3,1)
Sf-1	Sr-90+D	1.96E-08	4.82E-10	SLPF(4,1)
Sf-2	Inhalation, slope factors, 1/(pCi):			
Sf-2	Cs-137+D	1.12E-10	1.12E-10	SLPF(1,2)
Sf-2	Pb-210+D	3.08E-08	1.58E-08	SLPF(2,2)
Sf-2	Ra-226+D	2.83E-08	2.82E-08	SLPF(3,2)
Sf-2	Sr-90+D	4.33E-10	4.25E-10	SLPF(4,2)
Sf-3	Food ingestion, slope factors, 1/(pCi):			
Sf-3	Cs-137+D	3.74E-11	3.74E-11	SLPF(1,3)
Sf-3	Pb-210+D	3.44E-09	1.18E-09	SLPF(2,3)
Sf-3	Ra-226+D	5.15E-10	5.14E-10	SLPF(3,3)
Sf-3	Sr-90+D	9.53E-11	6.88E-11	SLPF(4,3)
Sf-3	Water ingestion, slope factors, 1/(pCi):			
Sf-3	Cs-137+D	3.04E-11	3.04E-11	SLPF(1,4)
Sf-3	Pb-210+D	2.66E-09	8.81E-10	SLPF(2,4)
Sf-3	Ra-226+D	3.86E-10	3.85E-10	SLPF(3,4)
Sf-3	Sr-90+D	7.40E-11	5.59E-11	SLPF(4,4)
Sf-3	Soil ingestion, slope factors, 1/(pCi):			
Sf-3	Cs-137+D	3.74E-11	3.74E-11	SLPF(1,5)
Sf-3	Pb-210+D	3.44E-09	1.18E-09	SLPF(2,5)
Sf-3	Ra-226+D	5.15E-10	5.14E-10	SLPF(3,5)
Sf-3	Sr-90+D	9.53E-11	6.88E-11	SLPF(4,5)
Sf-Rn	Radon Inhalation slope factors, 1/(pCi):			
Sf-Rn	Rn-222	1.80E-12	1.80E-12	SLPFRN(1,1)
Sf-Rn	Po-218	3.70E-12	3.70E-12	SLPFRN(1,2)
Sf-Rn	Pb-214	6.20E-12	6.20E-12	SLPFRN(1,3)
Sf-Rn	Bi-214	1.50E-11	1.50E-11	SLPFRN(1,4)
Sf-Rn	Radon K factors, (mrem/WLM):			
Sf-Rn	Rn-222 Indoor	7.60E+02	7.60E+02	KFACTR(1,1)
Sf-Rn	Rn-222 Outdoor	5.70E+02	5.70E+02	KFACTR(1,2)

*Base Case means Default.Lib w/o Associate Nuclide contributions.

Risk Slope and Environmental Transport Factors for the Ground Pathway

Nuclide (i)	Slope(i)* t= 0.000E+00	ETFG(i,t) At Time in Years (dimensionless) 1.000E+00	3.000E+00	1.000E+01	3.000E+01	1.000E+02	3.000E+02	1.000E+03
At-218	3.570E-09	5.450E-01	5.450E-01	5.450E-01	5.450E-01	5.450E-01	5.450E-01	5.450E-01
Ba-137m	2.690E-06	5.244E-01	5.244E-01	5.244E-01	5.244E-01	5.244E-01	5.244E-01	5.244E-01
Bi-210	2.760E-09	5.347E-01	5.347E-01	5.347E-01	5.347E-01	5.347E-01	5.347E-01	5.347E-01
Bi-214	7.480E-06	5.290E-01	5.290E-01	5.290E-01	5.290E-01	5.290E-01	5.290E-01	5.290E-01
Cs-137	5.320E-10	5.417E-01	5.417E-01	5.417E-01	5.417E-01	5.417E-01	5.417E-01	5.417E-01
Pb-210	1.410E-09	5.471E-01	5.471E-01	5.471E-01	5.471E-01	5.471E-01	5.471E-01	5.471E-01
Pb-214	9.820E-07	5.345E-01	5.345E-01	5.345E-01	5.345E-01	5.345E-01	5.345E-01	5.345E-01
Po-210	3.950E-11	5.270E-01	5.270E-01	5.270E-01	5.270E-01	5.270E-01	5.270E-01	5.270E-01
Po-214	3.860E-10	5.244E-01	5.244E-01	5.244E-01	5.244E-01	5.244E-01	5.244E-01	5.244E-01
Po-218	4.260E-11	5.270E-01	5.270E-01	5.270E-01	5.270E-01	5.270E-01	5.270E-01	5.270E-01
Ra-226	2.290E-08	5.443E-01	5.443E-01	5.443E-01	5.443E-01	5.443E-01	5.443E-01	5.443E-01
Rn-222	1.740E-09	5.255E-01	5.255E-01	5.255E-01	5.255E-01	5.255E-01	5.255E-01	5.255E-01
Sr-90	4.820E-10	5.441E-01	5.441E-01	5.441E-01	5.441E-01	5.441E-01	5.441E-01	5.441E-01
Tl-210	0.000E+00	6.000E-01	6.000E-01	6.000E-01	6.000E-01	6.000E-01	6.000E-01	6.000E-01
Y-90	1.910E-08	5.270E-01	5.270E-01	5.270E-01	5.270E-01	5.270E-01	5.270E-01	5.270E-01

* - Units are 1/yr per (pCi/g) at infinite depth and area. Multiplication by ETFG(i,t) converts to site conditions.

Amount of Intake Quantities QINT(i,p,t) for Individual Radionuclides (i) and Pathways (p)
As pCi/yr at t= 0.000E+00 years

Radio-	Water Independent Pathways (Inhalation w/o radon)					Water Dependent Pathways					
Nuclide	Inhalation	Plant	Meat	Milk	Soil	Water	Fish	Plant	Meat	Milk	Ingestion*
Cs-137	2.379E-03	1.007E+02	8.810E+00	2.877E+00	7.925E-01	0.000E+00	0.000E+00	0.000E+00	0.000E+00	0.000E+00	1.132E+02
Pb-210	1.114E-02	1.179E+02	4.030E-01	1.964E-01	3.709E+00	0.000E+00	0.000E+00	0.000E+00	0.000E+00	0.000E+00	1.222E+02
Ra-226	1.114E-02	4.715E+02	1.374E+00	1.683E+00	3.709E+00	0.000E+00	0.000E+00	0.000E+00	0.000E+00	0.000E+00	4.783E+02
Sr-90	1.071E-02	3.400E+03	6.861E+01	2.038E+01	3.566E+00	0.000E+00	0.000E+00	0.000E+00	0.000E+00	0.000E+00	3.493E+03

* Sum of all ingestion pathways, i.e. water independent plant, meat, milk, soil
and water-dependent water, fish, plant, meat, milk pathways

Amount of Intake Quantities QINT9(irn,i,t) and QINT9W(irn,i,t) for Inhalation of
Radon and its Decay Products as pCi/yr at t= 0.000E+00 years

Radon	Radionuclides							
Pathway	Rn-222	Po-218	Pb-214	Bi-214	Rn-220	Po-216	Pb-212	Bi-212
Water-ind.	0.000E+00	0.000E+00	0.000E+00	0.000E+00	0.000E+00	0.000E+00	0.000E+00	0.000E+00
Water-dep.	0.000E+00	0.000E+00	0.000E+00	0.000E+00	0.000E+00	0.000E+00	0.000E+00	0.000E+00
Total	0.000E+00	0.000E+00	0.000E+00	0.000E+00	0.000E+00	0.000E+00	0.000E+00	0.000E+00

Water-ind. == Water-independent Water-dep. == Water-dependent

Excess Cancer Risks CNRS(i,p,t) for Individual Radionuclides (i) and Pathways (p)
and Fraction of Total Risk at t= 0.000E+00 years

Water Independent Pathways (Inhalation excludes radon)

Radio-	Ground		Inhalation		Plant		Meat		Milk		Soil	
Nuclide	risk	fract.	risk	fract.	risk	fract.	risk	fract.	risk	fract.	risk	fract.
Cs-137	1.443E-06	0.0249	5.764E-12	0.0000	8.150E-08	0.0014	7.127E-09	0.0001	2.327E-09	0.0000	6.411E-10	0.0000
Pb-210	1.547E-08	0.0003	9.980E-09	0.0002	1.186E-05	0.2049	4.083E-08	0.0007	1.982E-08	0.0003	3.721E-07	0.0064
Ra-226	3.026E-05	0.5227	9.058E-09	0.0002	6.984E-06	0.1206	2.036E-08	0.0004	2.493E-08	0.0004	5.493E-08	0.0009
Sr-90	4.637E-08	0.0008	9.260E-11	0.0000	6.467E-06	0.1117	1.306E-07	0.0023	3.877E-08	0.0007	6.782E-09	0.0001
Total	3.177E-05	0.5487	1.914E-08	0.0003	2.540E-05	0.4386	1.989E-07	0.0034	8.585E-08	0.0015	4.345E-07	0.0075

Intrisk : RESRAD Default Parameters
File : C:\RESRAD_FAMILY\RESRAD\6.5\USERFILES\PARCEL G SURVEY UNIT 119 TRENCH MDA.RAD

Excess Cancer Risks CNRS(i,p,t) for Individual Radionuclides (i) and Pathways (p)
and Fraction of Total Risk at t= 0.000E+00 years

Water Dependent Pathways

Radio-	Water		Fish		Plant		Meat		Milk		All Pathways**	
Nuclide	risk	fract.	risk	fract.	risk	fract.	risk	fract.	risk	fract.	risk	fract.
Cs-137	0.000E+00	0.0000	0.000E+00	0.0000	0.000E+00	0.0000	0.000E+00	0.0000	0.000E+00	0.0000	1.535E-06	0.0265
Pb-210	0.000E+00	0.0000	0.000E+00	0.0000	0.000E+00	0.0000	0.000E+00	0.0000	0.000E+00	0.0000	1.232E-05	0.2128
Ra-226	0.000E+00	0.0000	0.000E+00	0.0000	0.000E+00	0.0000	0.000E+00	0.0000	0.000E+00	0.0000	3.736E-05	0.6452
Sr-90	0.000E+00	0.0000	0.000E+00	0.0000	0.000E+00	0.0000	0.000E+00	0.0000	0.000E+00	0.0000	6.690E-06	0.1155
Total	0.000E+00	0.0000	0.000E+00	0.0000	0.000E+00	0.0000	0.000E+00	0.0000	0.000E+00	0.0000	5.790E-05	1.0000

** Sum of water independent ground, inhalation, plant, meat, milk, soil
and water dependent water, fish, plant, meat, milk pathways

Excess Cancer Risks CNRS9(irn,i,t) and CNRS9W(irn,i,t) for Inhalation of
Radon and its Decay Products at t= 0.000E+00 years

Radon	Radionuclides							
Pathway	Rn-222	Po-218	Pb-214	Bi-214	Rn-220	Po-216	Pb-212	Bi-212
Water-ind.	0.000E+00	0.000E+00	0.000E+00	0.000E+00	0.000E+00	0.000E+00	0.000E+00	0.000E+00
Water-dep.	0.000E+00	0.000E+00	0.000E+00	0.000E+00	0.000E+00	0.000E+00	0.000E+00	0.000E+00
Total	0.000E+00	0.000E+00	0.000E+00	0.000E+00	0.000E+00	0.000E+00	0.000E+00	0.000E+00

Water-ind. == Water-independent Water-dep. == Water-dependent

Total Excess Cancer Risk CNRS(i,p,t)*** for Initially Existent Radionuclides (i) and Pathways (p)
and Fraction of Total Risk at t= 0.000E+00 years

Water Independent Pathways (Inhalation excludes radon)

Radio-	Ground		Inhalation		Radon		Plant		Meat		Milk		Soil	
Nuclide	risk	fract.	risk	fract.	risk	fract.	risk	fract.	risk	fract.	risk	fract.	risk	fract.
Cs-137	1.443E-06	0.0249	5.764E-12	0.0000	0.000E+00	0.0000	8.150E-08	0.0014	7.127E-09	0.0001	2.327E-09	0.0000	6.411E-10	0.0000
Pb-210	1.014E-08	0.0002	6.543E-09	0.0001	0.000E+00	0.0000	7.754E-06	0.1339	2.651E-08	0.0005	1.292E-08	0.0002	2.440E-07	0.0042
Ra-226	3.027E-05	0.5228	1.250E-08	0.0002	0.000E+00	0.0000	1.109E-05	0.1916	3.468E-08	0.0006	3.183E-08	0.0005	1.831E-07	0.0032
Sr-90	4.637E-08	0.0008	9.260E-11	0.0000	0.000E+00	0.0000	6.467E-06	0.1117	1.306E-07	0.0023	3.877E-08	0.0007	6.782E-09	0.0001
Total	3.177E-05	0.5487	1.914E-08	0.0003	0.000E+00	0.0000	2.540E-05	0.4386	1.989E-07	0.0034	8.585E-08	0.0015	4.345E-07	0.0075

Total Excess Cancer Risk CNRS(i,p,t)*** for Initially Existent Radionuclides (i) and Pathways (p)
and Fraction of Total Risk at t= 0.000E+00 years

Water Dependent Pathways

Radio-	Water		Fish		Radon		Plant		Meat		Milk		All pathways	
Nuclide	risk	fract.	risk	fract.	risk	fract.	risk	fract.	risk	fract.	risk	fract.	risk	fract.
Cs-137	0.000E+00	0.0000	0.000E+00	0.0000	0.000E+00	0.0000	0.000E+00	0.0000	0.000E+00	0.0000	0.000E+00	0.0000	1.535E-06	0.0265
Pb-210	0.000E+00	0.0000	0.000E+00	0.0000	0.000E+00	0.0000	0.000E+00	0.0000	0.000E+00	0.0000	0.000E+00	0.0000	8.054E-06	0.1391
Ra-226	0.000E+00	0.0000	0.000E+00	0.0000	0.000E+00	0.0000	0.000E+00	0.0000	0.000E+00	0.0000	0.000E+00	0.0000	4.162E-05	0.7189
Sr-90	0.000E+00	0.0000	0.000E+00	0.0000	0.000E+00	0.0000	0.000E+00	0.0000	0.000E+00	0.0000	0.000E+00	0.0000	6.690E-06	0.1155
Total	0.000E+00	0.0000	0.000E+00	0.0000	0.000E+00	0.0000	0.000E+00	0.0000	0.000E+00	0.0000	0.000E+00	0.0000	5.790E-05	1.0000

***CNRSI(i,p,t) includes contribution from decay daughter radionuclides

Amount of Intake Quantities QINT(i,p,t) for Individual Radionuclides (i) and Pathways (p)
As pCi/yr at t= 1.000E+00 years

Radio-	Water Independent Pathways (Inhalation w/o radon)					Water Dependent Pathways					
Nuclide	Inhalation	Plant	Meat	Milk	Soil	Water	Fish	Plant	Meat	Milk	Ingestion*
Cs-137	2.325E-03	9.844E+01	8.608E+00	2.811E+00	7.744E-01	0.000E+00	0.000E+00	0.000E+00	0.000E+00	0.000E+00	1.106E+02
Pb-210	1.112E-02	1.181E+02	4.067E-01	1.974E-01	3.703E+00	0.000E+00	0.000E+00	0.000E+00	0.000E+00	0.000E+00	1.224E+02
Ra-226	1.110E-02	4.702E+02	1.371E+00	1.679E+00	3.699E+00	0.000E+00	0.000E+00	0.000E+00	0.000E+00	0.000E+00	4.770E+02
Sr-90	1.040E-02	3.303E+03	6.670E+01	1.980E+01	3.463E+00	0.000E+00	0.000E+00	0.000E+00	0.000E+00	0.000E+00	3.393E+03

* Sum of all ingestion pathways, i.e. water independent plant, meat, milk, soil
and water-dependent water, fish, plant, meat, milk pathways

Amount of Intake Quantities QINT9(irn,i,t) and QINT9W(irn,i,t) for Inhalation of
Radon and its Decay Products as pCi/yr at t= 1.000E+00 years

Radon	Radionuclides							
Pathway	Rn-222	Po-218	Pb-214	Bi-214	Rn-220	Po-216	Pb-212	Bi-212
Water-ind.	0.000E+00	0.000E+00	0.000E+00	0.000E+00	0.000E+00	0.000E+00	0.000E+00	0.000E+00
Water-dep.	0.000E+00	0.000E+00	0.000E+00	0.000E+00	0.000E+00	0.000E+00	0.000E+00	0.000E+00
Total	0.000E+00	0.000E+00	0.000E+00	0.000E+00	0.000E+00	0.000E+00	0.000E+00	0.000E+00

Water-ind. == Water-independent Water-dep. == Water-dependent

Excess Cancer Risks CNRS(i,p,t) for Individual Radionuclides (i) and Pathways (p)
and Fraction of Total Risk at t= 1.000E+00 years

Water Independent Pathways (Inhalation excludes radon)

Radio-	Ground		Inhalation		Plant		Meat		Milk		Soil	
Nuclide	risk	fract.	risk	fract.	risk	fract.	risk	fract.	risk	fract.	risk	fract.
Cs-137	1.410E-06	0.0245	5.632E-12	0.0000	7.964E-08	0.0014	6.964E-09	0.0001	2.274E-09	0.0000	6.264E-10	0.0000
Pb-210	1.543E-08	0.0003	9.960E-09	0.0002	1.184E-05	0.2058	4.078E-08	0.0007	1.979E-08	0.0003	3.714E-07	0.0065
Ra-226	3.018E-05	0.5244	9.032E-09	0.0002	6.964E-06	0.1210	2.030E-08	0.0004	2.486E-08	0.0004	5.478E-08	0.0010
Sr-90	4.503E-08	0.0008	8.992E-11	0.0000	6.280E-06	0.1091	1.268E-07	0.0022	3.765E-08	0.0007	6.586E-09	0.0001
Total	3.165E-05	0.5500	1.909E-08	0.0003	2.517E-05	0.4373	1.949E-07	0.0034	8.458E-08	0.0015	4.333E-07	0.0075

Excess Cancer Risks CNRS(i,p,t) for Individual Radionuclides (i) and Pathways (p)
and Fraction of Total Risk at t= 1.000E+00 years

Water Dependent Pathways

Radio-	Water		Fish		Plant		Meat		Milk		All Pathways**	
Nuclide	risk	fract.	risk	fract.	risk	fract.	risk	fract.	risk	fract.	risk	fract.
Cs-137	0.000E+00	0.0000	0.000E+00	0.0000	0.000E+00	0.0000	0.000E+00	0.0000	0.000E+00	0.0000	1.500E-06	0.0261
Pb-210	0.000E+00	0.0000	0.000E+00	0.0000	0.000E+00	0.0000	0.000E+00	0.0000	0.000E+00	0.0000	1.230E-05	0.2137
Ra-226	0.000E+00	0.0000	0.000E+00	0.0000	0.000E+00	0.0000	0.000E+00	0.0000	0.000E+00	0.0000	3.725E-05	0.6473
Sr-90	0.000E+00	0.0000	0.000E+00	0.0000	0.000E+00	0.0000	0.000E+00	0.0000	0.000E+00	0.0000	6.497E-06	0.1129
Total	0.000E+00	0.0000	0.000E+00	0.0000	0.000E+00	0.0000	0.000E+00	0.0000	0.000E+00	0.0000	5.755E-05	1.0000

** Sum of water independent ground, inhalation, plant, meat, milk, soil
and water dependent water, fish, plant, meat, milk pathways

Excess Cancer Risks CNRS9(irn,i,t) and CNRS9W(irn,i,t) for Inhalation of
Radon and its Decay Products at t= 1.000E+00 years

Radon	Radionuclides							
Pathway	Rn-222	Po-218	Pb-214	Bi-214	Rn-220	Po-216	Pb-212	Bi-212
Water-ind.	0.000E+00	0.000E+00	0.000E+00	0.000E+00	0.000E+00	0.000E+00	0.000E+00	0.000E+00
Water-dep.	0.000E+00	0.000E+00	0.000E+00	0.000E+00	0.000E+00	0.000E+00	0.000E+00	0.000E+00
Total	0.000E+00	0.000E+00	0.000E+00	0.000E+00	0.000E+00	0.000E+00	0.000E+00	0.000E+00

Water-ind. == Water-independent Water-dep. == Water-dependent

Total Excess Cancer Risk CNRS(i,p,t)*** for Initially Existent Radionuclides (i) and Pathways (p)
and Fraction of Total Risk at t= 1.000E+00 years

Water Independent Pathways (Inhalation excludes radon)

Radio-	Ground		Inhalation		Radon		Plant		Meat		Milk		Soil	
Nuclide	risk	fract.	risk	fract.	risk	fract.	risk	fract.	risk	fract.	risk	fract.	risk	fract.
Cs-137	1.410E-06	0.0245	5.632E-12	0.0000	0.000E+00	0.0000	7.964E-08	0.0014	6.964E-09	0.0001	2.274E-09	0.0000	6.264E-10	0.0000
Pb-210	9.813E-09	0.0002	6.332E-09	0.0001	0.000E+00	0.0000	7.505E-06	0.1304	2.566E-08	0.0004	1.250E-08	0.0002	2.361E-07	0.0041
Ra-226	3.018E-05	0.5245	1.266E-08	0.0002	0.000E+00	0.0000	1.130E-05	0.1964	3.543E-08	0.0006	3.215E-08	0.0006	1.900E-07	0.0033
Sr-90	4.503E-08	0.0008	8.992E-11	0.0000	0.000E+00	0.0000	6.280E-06	0.1091	1.268E-07	0.0022	3.765E-08	0.0007	6.586E-09	0.0001
Total	3.165E-05	0.5500	1.909E-08	0.0003	0.000E+00	0.0000	2.517E-05	0.4373	1.949E-07	0.0034	8.458E-08	0.0015	4.333E-07	0.0075

Total Excess Cancer Risk CNRS(i,p,t)*** for Initially Existent Radionuclides (i) and Pathways (p)
and Fraction of Total Risk at t= 1.000E+00 years

Water Dependent Pathways

Radio-	Water		Fish		Radon		Plant		Meat		Milk		All pathways	
Nuclide	risk	fract.	risk	fract.	risk	fract.	risk	fract.	risk	fract.	risk	fract.	risk	fract.
Cs-137	0.000E+00	0.0000	0.000E+00	0.0000	0.000E+00	0.0000	0.000E+00	0.0000	0.000E+00	0.0000	0.000E+00	0.0000	1.500E-06	0.0261
Pb-210	0.000E+00	0.0000	0.000E+00	0.0000	0.000E+00	0.0000	0.000E+00	0.0000	0.000E+00	0.0000	0.000E+00	0.0000	7.795E-06	0.1355
Ra-226	0.000E+00	0.0000	0.000E+00	0.0000	0.000E+00	0.0000	0.000E+00	0.0000	0.000E+00	0.0000	0.000E+00	0.0000	4.176E-05	0.7256
Sr-90	0.000E+00	0.0000	0.000E+00	0.0000	0.000E+00	0.0000	0.000E+00	0.0000	0.000E+00	0.0000	0.000E+00	0.0000	6.497E-06	0.1129
Total	0.000E+00	0.0000	0.000E+00	0.0000	0.000E+00	0.0000	0.000E+00	0.0000	0.000E+00	0.0000	0.000E+00	0.0000	5.755E-05	1.0000

***CNRSI(i,p,t) includes contribution from decay daughter radionuclides

Amount of Intake Quantities QINT(i,p,t) for Individual Radionuclides (i) and Pathways (p)
As pCi/yr at t= 3.000E+00 years

Radio-	Water Independent Pathways (Inhalation w/o radon)					Water Dependent Pathways					
Nuclide	Inhalation	Plant	Meat	Milk	Soil	Water	Fish	Plant	Meat	Milk	Ingestion*
Cs-137	2.220E-03	9.399E+01	8.219E+00	2.684E+00	7.394E-01	0.000E+00	0.000E+00	0.000E+00	0.000E+00	0.000E+00	1.056E+02
Pb-210	1.108E-02	1.177E+02	4.053E-01	1.967E-01	3.690E+00	0.000E+00	0.000E+00	0.000E+00	0.000E+00	0.000E+00	1.220E+02
Ra-226	1.104E-02	4.676E+02	1.363E+00	1.669E+00	3.678E+00	0.000E+00	0.000E+00	0.000E+00	0.000E+00	0.000E+00	4.743E+02
Sr-90	9.806E-03	3.114E+03	6.290E+01	1.867E+01	3.266E+00	0.000E+00	0.000E+00	0.000E+00	0.000E+00	0.000E+00	3.199E+03

* Sum of all ingestion pathways, i.e. water independent plant, meat, milk, soil
and water-dependent water, fish, plant, meat, milk pathways

Amount of Intake Quantities QINT9(irn,i,t) and QINT9W(irn,i,t) for Inhalation of
Radon and its Decay Products as pCi/yr at t= 3.000E+00 years

Radon	Radionuclides							
Pathway	Rn-222	Po-218	Pb-214	Bi-214	Rn-220	Po-216	Pb-212	Bi-212
Water-ind.	0.000E+00	0.000E+00	0.000E+00	0.000E+00	0.000E+00	0.000E+00	0.000E+00	0.000E+00
Water-dep.	0.000E+00	0.000E+00	0.000E+00	0.000E+00	0.000E+00	0.000E+00	0.000E+00	0.000E+00
Total	0.000E+00	0.000E+00	0.000E+00	0.000E+00	0.000E+00	0.000E+00	0.000E+00	0.000E+00

Water-ind. == Water-independent Water-dep. == Water-dependent

Excess Cancer Risks CNRS(i,p,t) for Individual Radionuclides (i) and Pathways (p)
and Fraction of Total Risk at t= 3.000E+00 years

Water Independent Pathways (Inhalation excludes radon)

Radio-	Ground		Inhalation		Plant		Meat		Milk		Soil	
Nuclide	risk	fract.	risk	fract.	risk	fract.	risk	fract.	risk	fract.	risk	fract.
Cs-137	1.347E-06	0.0237	5.378E-12	0.0000	7.604E-08	0.0013	6.649E-09	0.0001	2.171E-09	0.0000	5.981E-10	0.0000
Pb-210	1.537E-08	0.0003	9.918E-09	0.0002	1.179E-05	0.2074	4.061E-08	0.0007	1.971E-08	0.0003	3.698E-07	0.0065
Ra-226	3.001E-05	0.5279	8.982E-09	0.0002	6.925E-06	0.1218	2.019E-08	0.0004	2.472E-08	0.0004	5.447E-08	0.0010
Sr-90	4.246E-08	0.0007	8.480E-11	0.0000	5.923E-06	0.1042	1.196E-07	0.0021	3.551E-08	0.0006	6.211E-09	0.0001
Total	3.141E-05	0.5526	1.899E-08	0.0003	2.472E-05	0.4348	1.871E-07	0.0033	8.211E-08	0.0014	4.311E-07	0.0076

Excess Cancer Risks CNRS(i,p,t) for Individual Radionuclides (i) and Pathways (p)
and Fraction of Total Risk at t= 3.000E+00 years

Water Dependent Pathways

Radio-	Water		Fish		Plant		Meat		Milk		All Pathways**	
Nuclide	risk	fract.	risk	fract.	risk	fract.	risk	fract.	risk	fract.	risk	fract.
Cs-137	0.000E+00	0.0000	0.000E+00	0.0000	0.000E+00	0.0000	0.000E+00	0.0000	0.000E+00	0.0000	1.432E-06	0.0252
Pb-210	0.000E+00	0.0000	0.000E+00	0.0000	0.000E+00	0.0000	0.000E+00	0.0000	0.000E+00	0.0000	1.225E-05	0.2154
Ra-226	0.000E+00	0.0000	0.000E+00	0.0000	0.000E+00	0.0000	0.000E+00	0.0000	0.000E+00	0.0000	3.704E-05	0.6516
Sr-90	0.000E+00	0.0000	0.000E+00	0.0000	0.000E+00	0.0000	0.000E+00	0.0000	0.000E+00	0.0000	6.127E-06	0.1078
Total	0.000E+00	0.0000	0.000E+00	0.0000	0.000E+00	0.0000	0.000E+00	0.0000	0.000E+00	0.0000	5.685E-05	1.0000

** Sum of water independent ground, inhalation, plant, meat, milk, soil
and water dependent water, fish, plant, meat, milk pathways

Excess Cancer Risks CNRS9(irn,i,t) and CNRS9W(irn,i,t) for Inhalation of
Radon and its Decay Products at t= 3.000E+00 years

Radon	Radionuclides							
Pathway	Rn-222	Po-218	Pb-214	Bi-214	Rn-220	Po-216	Pb-212	Bi-212
Water-ind.	0.000E+00	0.000E+00	0.000E+00	0.000E+00	0.000E+00	0.000E+00	0.000E+00	0.000E+00
Water-dep.	0.000E+00	0.000E+00	0.000E+00	0.000E+00	0.000E+00	0.000E+00	0.000E+00	0.000E+00
Total	0.000E+00	0.000E+00	0.000E+00	0.000E+00	0.000E+00	0.000E+00	0.000E+00	0.000E+00

Water-ind. == Water-independent Water-dep. == Water-dependent

Total Excess Cancer Risk CNRS(i,p,t)*** for Initially Existent Radionuclides (i) and Pathways (p)
and Fraction of Total Risk at t= 3.000E+00 years

Water Independent Pathways (Inhalation excludes radon)

Radio-	Ground		Inhalation		Radon		Plant		Meat		Milk		Soil	
Nuclide	risk	fract.	risk	fract.	risk	fract.	risk	fract.	risk	fract.	risk	fract.	risk	fract.
Cs-137	1.347E-06	0.0237	5.378E-12	0.0000	0.000E+00	0.0000	7.604E-08	0.0013	6.649E-09	0.0001	2.171E-09	0.0000	5.981E-10	0.0000
Pb-210	9.191E-09	0.0002	5.931E-09	0.0001	0.000E+00	0.0000	7.029E-06	0.1236	2.403E-08	0.0004	1.171E-08	0.0002	2.211E-07	0.0039
Ra-226	3.002E-05	0.5280	1.297E-08	0.0002	0.000E+00	0.0000	1.169E-05	0.2056	3.677E-08	0.0006	3.272E-08	0.0006	2.031E-07	0.0036
Sr-90	4.246E-08	0.0007	8.480E-11	0.0000	0.000E+00	0.0000	5.923E-06	0.1042	1.196E-07	0.0021	3.551E-08	0.0006	6.211E-09	0.0001
Total	3.141E-05	0.5526	1.899E-08	0.0003	0.000E+00	0.0000	2.472E-05	0.4348	1.871E-07	0.0033	8.211E-08	0.0014	4.311E-07	0.0076

Total Excess Cancer Risk CNRS(i,p,t)*** for Initially Existent Radionuclides (i) and Pathways (p)
and Fraction of Total Risk at t= 3.000E+00 years

Water Dependent Pathways

Radio-	Water		Fish		Radon		Plant		Meat		Milk		All pathways	
Nuclide	risk	fract.	risk	fract.	risk	fract.	risk	fract.	risk	fract.	risk	fract.	risk	fract.
Cs-137	0.000E+00	0.0000	0.000E+00	0.0000	0.000E+00	0.0000	0.000E+00	0.0000	0.000E+00	0.0000	0.000E+00	0.0000	1.432E-06	0.0252
Pb-210	0.000E+00	0.0000	0.000E+00	0.0000	0.000E+00	0.0000	0.000E+00	0.0000	0.000E+00	0.0000	0.000E+00	0.0000	7.301E-06	0.1284
Ra-226	0.000E+00	0.0000	0.000E+00	0.0000	0.000E+00	0.0000	0.000E+00	0.0000	0.000E+00	0.0000	0.000E+00	0.0000	4.199E-05	0.7386
Sr-90	0.000E+00	0.0000	0.000E+00	0.0000	0.000E+00	0.0000	0.000E+00	0.0000	0.000E+00	0.0000	0.000E+00	0.0000	6.127E-06	0.1078
Total	0.000E+00	0.0000	0.000E+00	0.0000	0.000E+00	0.0000	0.000E+00	0.0000	0.000E+00	0.0000	0.000E+00	0.0000	5.685E-05	1.0000

***CNRSI(i,p,t) includes contribution from decay daughter radionuclides

Amount of Intake Quantities QINT(i,p,t) for Individual Radionuclides (i) and Pathways (p)
As pCi/yr at t= 1.000E+01 years

Radio-	Water Independent Pathways (Inhalation w/o radon)					Water Dependent Pathways					
Nuclide	Inhalation	Plant	Meat	Milk	Soil	Water	Fish	Plant	Meat	Milk	Ingestion*
Cs-137	1.888E-03	7.994E+01	6.990E+00	2.282E+00	6.288E-01	0.000E+00	0.000E+00	0.000E+00	0.000E+00	0.000E+00	8.984E+01
Pb-210	1.093E-02	1.161E+02	4.000E-01	1.941E-01	3.642E+00	0.000E+00	0.000E+00	0.000E+00	0.000E+00	0.000E+00	1.204E+02
Ra-226	1.083E-02	4.585E+02	1.337E+00	1.637E+00	3.606E+00	0.000E+00	0.000E+00	0.000E+00	0.000E+00	0.000E+00	4.651E+02
Sr-90	7.986E-03	2.537E+03	5.123E+01	1.521E+01	2.660E+00	0.000E+00	0.000E+00	0.000E+00	0.000E+00	0.000E+00	2.606E+03

* Sum of all ingestion pathways, i.e. water independent plant, meat, milk, soil
and water-dependent water, fish, plant, meat, milk pathways

Amount of Intake Quantities QINT9(irn,i,t) and QINT9W(irn,i,t) for Inhalation of
Radon and its Decay Products as pCi/yr at t= 1.000E+01 years

Radon	Radionuclides							
Pathway	Rn-222	Po-218	Pb-214	Bi-214	Rn-220	Po-216	Pb-212	Bi-212
Water-ind.	0.000E+00	0.000E+00	0.000E+00	0.000E+00	0.000E+00	0.000E+00	0.000E+00	0.000E+00
Water-dep.	0.000E+00	0.000E+00	0.000E+00	0.000E+00	0.000E+00	0.000E+00	0.000E+00	0.000E+00
Total	0.000E+00	0.000E+00	0.000E+00	0.000E+00	0.000E+00	0.000E+00	0.000E+00	0.000E+00

Water-ind. == Water-independent Water-dep. == Water-dependent

Excess Cancer Risks CNRS(i,p,t) for Individual Radionuclides (i) and Pathways (p)
and Fraction of Total Risk at t= 1.000E+01 years

Water Independent Pathways (Inhalation excludes radon)

Radio-	Ground		Inhalation		Plant		Meat		Milk		Soil	
Nuclide	risk	fract.	risk	fract.	risk	fract.	risk	fract.	risk	fract.	risk	fract.
Cs-137	1.145E-06	0.0210	4.573E-12	0.0000	6.466E-08	0.0012	5.655E-09	0.0001	1.846E-09	0.0000	5.087E-10	0.0000
Pb-210	1.514E-08	0.0003	9.767E-09	0.0002	1.161E-05	0.2127	3.999E-08	0.0007	1.941E-08	0.0004	3.642E-07	0.0067
Ra-226	2.943E-05	0.5390	8.807E-09	0.0002	6.790E-06	0.1244	1.980E-08	0.0004	2.424E-08	0.0004	5.341E-08	0.0010
Sr-90	3.458E-08	0.0006	6.907E-11	0.0000	4.824E-06	0.0884	9.742E-08	0.0018	2.892E-08	0.0005	5.058E-09	0.0001
Total	3.062E-05	0.5609	1.865E-08	0.0003	2.329E-05	0.4267	1.629E-07	0.0030	7.441E-08	0.0014	4.231E-07	0.0078

Excess Cancer Risks CNRS(i,p,t) for Individual Radionuclides (i) and Pathways (p)
and Fraction of Total Risk at t= 1.000E+01 years

Water Dependent Pathways

Radio-	Water		Fish		Plant		Meat		Milk		All Pathways**	
Nuclide	risk	fract.	risk	fract.	risk	fract.	risk	fract.	risk	fract.	risk	fract.
Cs-137	0.000E+00	0.0000	0.000E+00	0.0000	0.000E+00	0.0000	0.000E+00	0.0000	0.000E+00	0.0000	1.218E-06	0.0223
Pb-210	0.000E+00	0.0000	0.000E+00	0.0000	0.000E+00	0.0000	0.000E+00	0.0000	0.000E+00	0.0000	1.206E-05	0.2209
Ra-226	0.000E+00	0.0000	0.000E+00	0.0000	0.000E+00	0.0000	0.000E+00	0.0000	0.000E+00	0.0000	3.632E-05	0.6653
Sr-90	0.000E+00	0.0000	0.000E+00	0.0000	0.000E+00	0.0000	0.000E+00	0.0000	0.000E+00	0.0000	4.990E-06	0.0914
Total	0.000E+00	0.0000	0.000E+00	0.0000	0.000E+00	0.0000	0.000E+00	0.0000	0.000E+00	0.0000	5.459E-05	1.0000

** Sum of water independent ground, inhalation, plant, meat, milk, soil
and water dependent water, fish, plant, meat, milk pathways

Excess Cancer Risks CNRS9(irn,i,t) and CNRS9W(irn,i,t) for Inhalation of
Radon and its Decay Products at t= 1.000E+01 years

Radon	Radionuclides							
Pathway	Rn-222	Po-218	Pb-214	Bi-214	Rn-220	Po-216	Pb-212	Bi-212
Water-ind.	0.000E+00	0.000E+00	0.000E+00	0.000E+00	0.000E+00	0.000E+00	0.000E+00	0.000E+00
Water-dep.	0.000E+00	0.000E+00	0.000E+00	0.000E+00	0.000E+00	0.000E+00	0.000E+00	0.000E+00
Total	0.000E+00	0.000E+00	0.000E+00	0.000E+00	0.000E+00	0.000E+00	0.000E+00	0.000E+00

Water-ind. == Water-independent Water-dep. == Water-dependent

Total Excess Cancer Risk CNRS(i,p,t)*** for Initially Existent Radionuclides (i) and Pathways (p)
and Fraction of Total Risk at t= 1.000E+01 years

Water Independent Pathways (Inhalation excludes radon)

Radio-	Ground		Inhalation		Radon		Plant		Meat		Milk		Soil	
Nuclide	risk	fract.	risk	fract.	risk	fract.	risk	fract.	risk	fract.	risk	fract.	risk	fract.
Cs-137	1.145E-06	0.0210	4.573E-12	0.0000	0.000E+00	0.0000	6.466E-08	0.0012	5.655E-09	0.0001	1.846E-09	0.0000	5.087E-10	0.0000
Pb-210	7.308E-09	0.0001	4.716E-09	0.0001	0.000E+00	0.0000	5.589E-06	0.1024	1.911E-08	0.0004	9.310E-09	0.0002	1.758E-07	0.0032
Ra-226	2.943E-05	0.5392	1.386E-08	0.0003	0.000E+00	0.0000	1.281E-05	0.2347	4.068E-08	0.0007	3.434E-08	0.0006	2.417E-07	0.0044
Sr-90	3.458E-08	0.0006	6.907E-11	0.0000	0.000E+00	0.0000	4.824E-06	0.0884	9.742E-08	0.0018	2.892E-08	0.0005	5.058E-09	0.0001
Total	3.062E-05	0.5609	1.865E-08	0.0003	0.000E+00	0.0000	2.329E-05	0.4267	1.629E-07	0.0030	7.441E-08	0.0014	4.231E-07	0.0078

Intrisk : RESRAD Default Parameters
File : C:\RESRAD_FAMILY\RESRAD\6.5\USERFILES\PARCEL G SURVEY UNIT 119 TRENCH MDA.RAD

Total Excess Cancer Risk CNRS(i,p,t)*** for Initially Existent Radionuclides (i) and Pathways (p)
and Fraction of Total Risk at t= 1.000E+01 years

Water Dependent Pathways

Radio-	Water		Fish		Radon		Plant		Meat		Milk		All pathways	
Nuclide	risk	fract.	risk	fract.	risk	fract.	risk	fract.	risk	fract.	risk	fract.	risk	fract.
Cs-137	0.000E+00	0.0000	0.000E+00	0.0000	0.000E+00	0.0000	0.000E+00	0.0000	0.000E+00	0.0000	0.000E+00	0.0000	1.218E-06	0.0223
Pb-210	0.000E+00	0.0000	0.000E+00	0.0000	0.000E+00	0.0000	0.000E+00	0.0000	0.000E+00	0.0000	0.000E+00	0.0000	5.805E-06	0.1063
Ra-226	0.000E+00	0.0000	0.000E+00	0.0000	0.000E+00	0.0000	0.000E+00	0.0000	0.000E+00	0.0000	0.000E+00	0.0000	4.258E-05	0.7799
Sr-90	0.000E+00	0.0000	0.000E+00	0.0000	0.000E+00	0.0000	0.000E+00	0.0000	0.000E+00	0.0000	0.000E+00	0.0000	4.990E-06	0.0914
Total	0.000E+00	0.0000	0.000E+00	0.0000	0.000E+00	0.0000	0.000E+00	0.0000	0.000E+00	0.0000	0.000E+00	0.0000	5.459E-05	1.0000

***CNRSI(i,p,t) includes contribution from decay daughter radionuclides

Amount of Intake Quantities QINT(i,p,t) for Individual Radionuclides (i) and Pathways (p)
As pCi/yr at t= 3.000E+01 years

Radio-	Water Independent Pathways (Inhalation w/o radon)					Water Dependent Pathways					
Nuclide	Inhalation	Plant	Meat	Milk	Soil	Water	Fish	Plant	Meat	Milk	Ingestion*
Cs-137	1.188E-03	5.032E+01	4.400E+00	1.437E+00	3.958E-01	0.000E+00	0.000E+00	0.000E+00	0.000E+00	0.000E+00	5.655E+01
Pb-210	1.047E-02	1.112E+02	3.829E-01	1.858E-01	3.487E+00	0.000E+00	0.000E+00	0.000E+00	0.000E+00	0.000E+00	1.152E+02
Ra-226	1.024E-02	4.335E+02	1.264E+00	1.547E+00	3.409E+00	0.000E+00	0.000E+00	0.000E+00	0.000E+00	0.000E+00	4.397E+02
Sr-90	4.443E-03	1.411E+03	2.850E+01	8.461E+00	1.480E+00	0.000E+00	0.000E+00	0.000E+00	0.000E+00	0.000E+00	1.450E+03

* Sum of all ingestion pathways, i.e. water independent plant, meat, milk, soil
and water-dependent water, fish, plant, meat, milk pathways

Amount of Intake Quantities QINT9(irn,i,t) and QINT9W(irn,i,t) for Inhalation of
Radon and its Decay Products as pCi/yr at t= 3.000E+01 years

Radon	Radionuclides							
Pathway	Rn-222	Po-218	Pb-214	Bi-214	Rn-220	Po-216	Pb-212	Bi-212
Water-ind.	0.000E+00	0.000E+00	0.000E+00	0.000E+00	0.000E+00	0.000E+00	0.000E+00	0.000E+00
Water-dep.	0.000E+00	0.000E+00	0.000E+00	0.000E+00	0.000E+00	0.000E+00	0.000E+00	0.000E+00
Total	0.000E+00	0.000E+00	0.000E+00	0.000E+00	0.000E+00	0.000E+00	0.000E+00	0.000E+00

Water-ind. == Water-independent Water-dep. == Water-dependent

Excess Cancer Risks CNRS(i,p,t) for Individual Radionuclides (i) and Pathways (p)
and Fraction of Total Risk at t= 3.000E+01 years

Water Independent Pathways (Inhalation excludes radon)

Radio-	Ground		Inhalation		Plant		Meat		Milk		Soil	
Nuclide	risk	fract.	risk	fract.	risk	fract.	risk	fract.	risk	fract.	risk	fract.
Cs-137	7.209E-07	0.0146	2.879E-12	0.0000	4.071E-08	0.0008	3.560E-09	0.0001	1.162E-09	0.0000	3.202E-10	0.0000
Pb-210	1.443E-08	0.0003	9.310E-09	0.0002	1.107E-05	0.2242	3.812E-08	0.0008	1.850E-08	0.0004	3.472E-07	0.0070
Ra-226	2.782E-05	0.5634	8.326E-09	0.0002	6.420E-06	0.1300	1.872E-08	0.0004	2.292E-08	0.0005	5.049E-08	0.0010
Sr-90	1.924E-08	0.0004	3.843E-11	0.0000	2.684E-06	0.0543	5.420E-08	0.0011	1.609E-08	0.0003	2.814E-09	0.0001
Total	2.857E-05	0.5787	1.768E-08	0.0004	2.021E-05	0.4094	1.146E-07	0.0023	5.867E-08	0.0012	4.008E-07	0.0081

Excess Cancer Risks CNRS(i,p,t) for Individual Radionuclides (i) and Pathways (p)
and Fraction of Total Risk at t= 3.000E+01 years

Water Dependent Pathways

Radio-	Water		Fish		Plant		Meat		Milk		All Pathways**	
Nuclide	risk	fract.	risk	fract.	risk	fract.	risk	fract.	risk	fract.	risk	fract.
Cs-137	0.000E+00	0.0000	0.000E+00	0.0000	0.000E+00	0.0000	0.000E+00	0.0000	0.000E+00	0.0000	7.667E-07	0.0155
Pb-210	0.000E+00	0.0000	0.000E+00	0.0000	0.000E+00	0.0000	0.000E+00	0.0000	0.000E+00	0.0000	1.150E-05	0.2328
Ra-226	0.000E+00	0.0000	0.000E+00	0.0000	0.000E+00	0.0000	0.000E+00	0.0000	0.000E+00	0.0000	3.434E-05	0.6954
Sr-90	0.000E+00	0.0000	0.000E+00	0.0000	0.000E+00	0.0000	0.000E+00	0.0000	0.000E+00	0.0000	2.776E-06	0.0562
Total	0.000E+00	0.0000	0.000E+00	0.0000	0.000E+00	0.0000	0.000E+00	0.0000	0.000E+00	0.0000	4.938E-05	1.0000

** Sum of water independent ground, inhalation, plant, meat, milk, soil
and water dependent water, fish, plant, meat, milk pathways

Excess Cancer Risks CNRS9(irn,i,t) and CNRS9W(irn,i,t) for Inhalation of
Radon and its Decay Products at t= 3.000E+01 years

Radon	Radionuclides							
Pathway	Rn-222	Po-218	Pb-214	Bi-214	Rn-220	Po-216	Pb-212	Bi-212
Water-ind.	0.000E+00	0.000E+00	0.000E+00	0.000E+00	0.000E+00	0.000E+00	0.000E+00	0.000E+00
Water-dep.	0.000E+00	0.000E+00	0.000E+00	0.000E+00	0.000E+00	0.000E+00	0.000E+00	0.000E+00
Total	0.000E+00	0.000E+00	0.000E+00	0.000E+00	0.000E+00	0.000E+00	0.000E+00	0.000E+00

Water-ind. == Water-independent Water-dep. == Water-dependent

Total Excess Cancer Risk CNRS(i,p,t)*** for Initially Existent Radionuclides (i) and Pathways (p)
and Fraction of Total Risk at t= 3.000E+01 years

Water Independent Pathways (Inhalation excludes radon)

Radio-	Ground		Inhalation		Radon		Plant		Meat		Milk		Soil	
Nuclide	risk	fract.	risk	fract.	risk	fract.	risk	fract.	risk	fract.	risk	fract.	risk	fract.
Cs-137	7.209E-07	0.0146	2.879E-12	0.0000	0.000E+00	0.0000	4.071E-08	0.0008	3.560E-09	0.0001	1.162E-09	0.0000	3.202E-10	0.0000
Pb-210	3.796E-09	0.0001	2.450E-09	0.0000	0.000E+00	0.0000	2.903E-06	0.0588	9.926E-09	0.0002	4.836E-09	0.0001	9.134E-08	0.0018
Ra-226	2.783E-05	0.5636	1.519E-08	0.0003	0.000E+00	0.0000	1.459E-05	0.2954	4.691E-08	0.0009	3.658E-08	0.0007	3.063E-07	0.0062
Sr-90	1.924E-08	0.0004	3.843E-11	0.0000	0.000E+00	0.0000	2.684E-06	0.0543	5.420E-08	0.0011	1.609E-08	0.0003	2.814E-09	0.0001
Total	2.857E-05	0.5787	1.768E-08	0.0004	0.000E+00	0.0000	2.021E-05	0.4094	1.146E-07	0.0023	5.867E-08	0.0012	4.008E-07	0.0081

Intrisk : RESRAD Default Parameters
File : C:\RESRAD_FAMILY\RESRAD\6.5\USERFILES\PARCEL G SURVEY UNIT 119 TRENCH MDA.RAD

Total Excess Cancer Risk CNRS(i,p,t)*** for Initially Existent Radionuclides (i) and Pathways (p)
and Fraction of Total Risk at t= 3.000E+01 years

Water Dependent Pathways

Radio-	Water		Fish		Radon		Plant		Meat		Milk		All pathways	
Nuclide	risk	fract.	risk	fract.	risk	fract.	risk	fract.	risk	fract.	risk	fract.	risk	fract.
Cs-137	0.000E+00	0.0000	0.000E+00	0.0000	0.000E+00	0.0000	0.000E+00	0.0000	0.000E+00	0.0000	0.000E+00	0.0000	7.667E-07	0.0155
Pb-210	0.000E+00	0.0000	0.000E+00	0.0000	0.000E+00	0.0000	0.000E+00	0.0000	0.000E+00	0.0000	0.000E+00	0.0000	3.016E-06	0.0611
Ra-226	0.000E+00	0.0000	0.000E+00	0.0000	0.000E+00	0.0000	0.000E+00	0.0000	0.000E+00	0.0000	0.000E+00	0.0000	4.282E-05	0.8672
Sr-90	0.000E+00	0.0000	0.000E+00	0.0000	0.000E+00	0.0000	0.000E+00	0.0000	0.000E+00	0.0000	0.000E+00	0.0000	2.776E-06	0.0562
Total	0.000E+00	0.0000	0.000E+00	0.0000	0.000E+00	0.0000	0.000E+00	0.0000	0.000E+00	0.0000	0.000E+00	0.0000	4.938E-05	1.0000

***CNRSI(i,p,t) includes contribution from decay daughter radionuclides

Amount of Intake Quantities QINT(i,p,t) for Individual Radionuclides (i) and Pathways (p)
As pCi/yr at t= 1.000E+02 years

Radio-	Water Independent Pathways (Inhalation w/o radon)					Water Dependent Pathways					
Nuclide	Inhalation	Plant	Meat	Milk	Soil	Water	Fish	Plant	Meat	Milk	Ingestion*
Cs-137	2.352E-04	9.959E+00	8.709E-01	2.844E-01	7.834E-02	0.000E+00	0.000E+00	0.000E+00	0.000E+00	0.000E+00	1.119E+01
Pb-210	8.716E-03	9.256E+01	3.187E-01	1.547E-01	2.903E+00	0.000E+00	0.000E+00	0.000E+00	0.000E+00	0.000E+00	9.594E+01
Ra-226	8.410E-03	3.561E+02	1.038E+00	1.271E+00	2.801E+00	0.000E+00	0.000E+00	0.000E+00	0.000E+00	0.000E+00	3.612E+02
Sr-90	5.706E-04	1.812E+02	3.660E+00	1.087E+00	1.901E-01	0.000E+00	0.000E+00	0.000E+00	0.000E+00	0.000E+00	1.862E+02

* Sum of all ingestion pathways, i.e. water independent plant, meat, milk, soil
and water-dependent water, fish, plant, meat, milk pathways

Amount of Intake Quantities QINT9(irn,i,t) and QINT9W(irn,i,t) for Inhalation of
Radon and its Decay Products as pCi/yr at t= 1.000E+02 years

Radon	Radionuclides							
Pathway	Rn-222	Po-218	Pb-214	Bi-214	Rn-220	Po-216	Pb-212	Bi-212
Water-ind.	0.000E+00	0.000E+00	0.000E+00	0.000E+00	0.000E+00	0.000E+00	0.000E+00	0.000E+00
Water-dep.	0.000E+00	0.000E+00	0.000E+00	0.000E+00	0.000E+00	0.000E+00	0.000E+00	0.000E+00
Total	0.000E+00	0.000E+00	0.000E+00	0.000E+00	0.000E+00	0.000E+00	0.000E+00	0.000E+00

Water-ind. == Water-independent Water-dep. == Water-dependent

Excess Cancer Risks CNRS(i,p,t) for Individual Radionuclides (i) and Pathways (p)
and Fraction of Total Risk at t= 1.000E+02 years

Water Independent Pathways (Inhalation excludes radon)

Radio-	Ground		Inhalation		Plant		Meat		Milk		Soil	
Nuclide	risk	fract.	risk	fract.	risk	fract.	risk	fract.	risk	fract.	risk	fract.
Cs-137	1.427E-07	0.0037	5.698E-13	0.0000	8.057E-09	0.0002	7.045E-10	0.0000	2.300E-10	0.0000	6.338E-11	0.0000
Pb-210	1.196E-08	0.0003	7.717E-09	0.0002	9.175E-06	0.2399	3.159E-08	0.0008	1.533E-08	0.0004	2.877E-07	0.0075
Ra-226	2.286E-05	0.5975	6.841E-09	0.0002	5.274E-06	0.1379	1.538E-08	0.0004	1.883E-08	0.0005	4.149E-08	0.0011
Sr-90	2.471E-09	0.0001	4.935E-12	0.0000	3.447E-07	0.0090	6.961E-09	0.0002	2.066E-09	0.0001	3.614E-10	0.0000
Total	2.301E-05	0.6016	1.456E-08	0.0004	1.480E-05	0.3870	5.463E-08	0.0014	3.646E-08	0.0010	3.296E-07	0.0086

Excess Cancer Risks CNRS(i,p,t) for Individual Radionuclides (i) and Pathways (p)
and Fraction of Total Risk at t= 1.000E+02 years

Water Dependent Pathways

Radio-	Water		Fish		Plant		Meat		Milk		All Pathways**	
Nuclide	risk	fract.	risk	fract.	risk	fract.	risk	fract.	risk	fract.	risk	fract.
Cs-137	0.000E+00	0.0000	0.000E+00	0.0000	0.000E+00	0.0000	0.000E+00	0.0000	0.000E+00	0.0000	1.517E-07	0.0040
Pb-210	0.000E+00	0.0000	0.000E+00	0.0000	0.000E+00	0.0000	0.000E+00	0.0000	0.000E+00	0.0000	9.529E-06	0.2491
Ra-226	0.000E+00	0.0000	0.000E+00	0.0000	0.000E+00	0.0000	0.000E+00	0.0000	0.000E+00	0.0000	2.821E-05	0.7376
Sr-90	0.000E+00	0.0000	0.000E+00	0.0000	0.000E+00	0.0000	0.000E+00	0.0000	0.000E+00	0.0000	3.565E-07	0.0093
Total	0.000E+00	0.0000	0.000E+00	0.0000	0.000E+00	0.0000	0.000E+00	0.0000	0.000E+00	0.0000	3.825E-05	1.0000

** Sum of water independent ground, inhalation, plant, meat, milk, soil
and water dependent water, fish, plant, meat, milk pathways

Excess Cancer Risks CNRS9(irn,i,t) and CNRS9W(irn,i,t) for Inhalation of
Radon and its Decay Products at t= 1.000E+02 years

Radon	Radionuclides							
Pathway	Rn-222	Po-218	Pb-214	Bi-214	Rn-220	Po-216	Pb-212	Bi-212
Water-ind.	0.000E+00	0.000E+00	0.000E+00	0.000E+00	0.000E+00	0.000E+00	0.000E+00	0.000E+00
Water-dep.	0.000E+00	0.000E+00	0.000E+00	0.000E+00	0.000E+00	0.000E+00	0.000E+00	0.000E+00
Total	0.000E+00	0.000E+00	0.000E+00	0.000E+00	0.000E+00	0.000E+00	0.000E+00	0.000E+00

Water-ind. == Water-independent Water-dep. == Water-dependent

Total Excess Cancer Risk CNRS(i,p,t)*** for Initially Existent Radionuclides (i) and Pathways (p)
and Fraction of Total Risk at t= 1.000E+02 years

Water Independent Pathways (Inhalation excludes radon)

Radio-	Ground		Inhalation		Radon		Plant		Meat		Milk		Soil	
Nuclide	risk	fract.	risk	fract.	risk	fract.	risk	fract.	risk	fract.	risk	fract.	risk	fract.
Cs-137	1.427E-07	0.0037	5.698E-13	0.0000	0.000E+00	0.0000	8.057E-09	0.0002	7.045E-10	0.0000	2.300E-10	0.0000	6.338E-11	0.0000
Pb-210	3.836E-10	0.0000	2.475E-10	0.0000	0.000E+00	0.0000	2.934E-07	0.0077	1.003E-09	0.0000	4.887E-10	0.0000	9.230E-09	0.0002
Ra-226	2.287E-05	0.5978	1.431E-08	0.0004	0.000E+00	0.0000	1.416E-05	0.3701	4.597E-08	0.0012	3.367E-08	0.0009	3.200E-07	0.0084
Sr-90	2.471E-09	0.0001	4.935E-12	0.0000	0.000E+00	0.0000	3.447E-07	0.0090	6.961E-09	0.0002	2.066E-09	0.0001	3.614E-10	0.0000
Total	2.301E-05	0.6016	1.456E-08	0.0004	0.000E+00	0.0000	1.480E-05	0.3870	5.463E-08	0.0014	3.646E-08	0.0010	3.296E-07	0.0086

Total Excess Cancer Risk CNRS(i,p,t)*** for Initially Existent Radionuclides (i) and Pathways (p)
and Fraction of Total Risk at t= 1.000E+02 years

Water Dependent Pathways

Radio-	Water		Fish		Radon		Plant		Meat		Milk		All pathways	
Nuclide	risk	fract.	risk	fract.	risk	fract.	risk	fract.	risk	fract.	risk	fract.	risk	fract.
Cs-137	0.000E+00	0.0000	0.000E+00	0.0000	0.000E+00	0.0000	0.000E+00	0.0000	0.000E+00	0.0000	0.000E+00	0.0000	1.517E-07	0.0040
Pb-210	0.000E+00	0.0000	0.000E+00	0.0000	0.000E+00	0.0000	0.000E+00	0.0000	0.000E+00	0.0000	0.000E+00	0.0000	3.047E-07	0.0080
Ra-226	0.000E+00	0.0000	0.000E+00	0.0000	0.000E+00	0.0000	0.000E+00	0.0000	0.000E+00	0.0000	0.000E+00	0.0000	3.744E-05	0.9787
Sr-90	0.000E+00	0.0000	0.000E+00	0.0000	0.000E+00	0.0000	0.000E+00	0.0000	0.000E+00	0.0000	0.000E+00	0.0000	3.565E-07	0.0093
Total	0.000E+00	0.0000	0.000E+00	0.0000	0.000E+00	0.0000	0.000E+00	0.0000	0.000E+00	0.0000	0.000E+00	0.0000	3.825E-05	1.0000

***CNRSI(i,p,t) includes contribution from decay daughter radionuclides

Amount of Intake Quantities QINT(i,p,t) for Individual Radionuclides (i) and Pathways (p)
As pCi/yr at t= 3.000E+02 years

Radio-	Water Independent Pathways (Inhalation w/o radon)					Water Dependent Pathways					
Nuclide	Inhalation	Plant	Meat	Milk	Soil	Water	Fish	Plant	Meat	Milk	Ingestion*
Cs-137	2.299E-06	9.732E-02	8.510E-03	2.779E-03	7.656E-04	0.000E+00	0.000E+00	0.000E+00	0.000E+00	0.000E+00	1.094E-01
Pb-210	4.981E-03	5.290E+01	1.821E-01	8.840E-02	1.659E+00	0.000E+00	0.000E+00	0.000E+00	0.000E+00	0.000E+00	5.483E+01
Ra-226	4.797E-03	2.031E+02	5.923E-01	7.252E-01	1.598E+00	0.000E+00	0.000E+00	0.000E+00	0.000E+00	0.000E+00	2.061E+02
Sr-90	1.621E-06	5.148E-01	1.040E-02	3.086E-03	5.398E-04	5.160E-01	2.016E-04	2.476E-02	2.573E-03	1.404E-03	1.074E+00

* Sum of all ingestion pathways, i.e. water independent plant, meat, milk, soil
and water-dependent water, fish, plant, meat, milk pathways

Amount of Intake Quantities QINT9(irn,i,t) and QINT9W(irn,i,t) for Inhalation of
Radon and its Decay Products as pCi/yr at t= 3.000E+02 years

Radon	Radionuclides							
Pathway	Rn-222	Po-218	Pb-214	Bi-214	Rn-220	Po-216	Pb-212	Bi-212
Water-ind.	0.000E+00	0.000E+00	0.000E+00	0.000E+00	0.000E+00	0.000E+00	0.000E+00	0.000E+00
Water-dep.	0.000E+00	0.000E+00	0.000E+00	0.000E+00	0.000E+00	0.000E+00	0.000E+00	0.000E+00
Total	0.000E+00	0.000E+00	0.000E+00	0.000E+00	0.000E+00	0.000E+00	0.000E+00	0.000E+00

Water-ind. == Water-independent Water-dep. == Water-dependent

Excess Cancer Risks CNRS(i,p,t) for Individual Radionuclides (i) and Pathways (p)
and Fraction of Total Risk at t= 3.000E+02 years

Water Independent Pathways (Inhalation excludes radon)

Radio-	Ground		Inhalation		Plant		Meat		Milk		Soil	
Nuclide	risk	fract.	risk	fract.	risk	fract.	risk	fract.	risk	fract.	risk	fract.
Cs-137	1.394E-09	0.0001	5.568E-15	0.0000	7.873E-11	0.0000	6.885E-12	0.0000	2.248E-12	0.0000	6.193E-13	0.0000
Pb-210	6.830E-09	0.0003	4.407E-09	0.0002	5.240E-06	0.2433	1.804E-08	0.0008	8.757E-09	0.0004	1.643E-07	0.0076
Ra-226	1.304E-05	0.6053	3.902E-09	0.0002	3.009E-06	0.1397	8.772E-09	0.0004	1.074E-08	0.0005	2.366E-08	0.0011
Sr-90	7.019E-12	0.0000	1.402E-14	0.0000	9.789E-10	0.0000	1.977E-11	0.0000	5.869E-12	0.0000	1.027E-12	0.0000
Total	1.305E-05	0.6057	8.310E-09	0.0004	8.250E-06	0.3830	2.684E-08	0.0012	1.950E-08	0.0009	1.880E-07	0.0087

Excess Cancer Risks CNRS(i,p,t) for Individual Radionuclides (i) and Pathways (p)
and Fraction of Total Risk at t= 3.000E+02 years

Water Dependent Pathways

Radio-	Water		Fish		Plant		Meat		Milk		All Pathways**	
Nuclide	risk	fract.	risk	fract.	risk	fract.	risk	fract.	risk	fract.	risk	fract.
Cs-137	0.000E+00	0.0000	0.000E+00	0.0000	0.000E+00	0.0000	0.000E+00	0.0000	0.000E+00	0.0000	1.483E-09	0.0001
Pb-210	0.000E+00	0.0000	0.000E+00	0.0000	0.000E+00	0.0000	0.000E+00	0.0000	0.000E+00	0.0000	5.442E-06	0.2527
Ra-226	0.000E+00	0.0000	0.000E+00	0.0000	0.000E+00	0.0000	0.000E+00	0.0000	0.000E+00	0.0000	1.609E-05	0.7472
Sr-90	8.855E-10	0.0000	4.455E-13	0.0000	5.472E-11	0.0000	5.686E-12	0.0000	3.104E-12	0.0000	1.962E-09	0.0001
Total	8.855E-10	0.0000	4.455E-13	0.0000	5.472E-11	0.0000	5.686E-12	0.0000	3.104E-12	0.0000	2.154E-05	1.0000

** Sum of water independent ground, inhalation, plant, meat, milk, soil
and water dependent water, fish, plant, meat, milk pathways

Excess Cancer Risks CNRS9(irn,i,t) and CNRS9W(irn,i,t) for Inhalation of
Radon and its Decay Products at t= 3.000E+02 years

Radon	Radionuclides							
Pathway	Rn-222	Po-218	Pb-214	Bi-214	Rn-220	Po-216	Pb-212	Bi-212
Water-ind.	0.000E+00	0.000E+00	0.000E+00	0.000E+00	0.000E+00	0.000E+00	0.000E+00	0.000E+00
Water-dep.	0.000E+00	0.000E+00	0.000E+00	0.000E+00	0.000E+00	0.000E+00	0.000E+00	0.000E+00
Total	0.000E+00	0.000E+00	0.000E+00	0.000E+00	0.000E+00	0.000E+00	0.000E+00	0.000E+00

Water-ind. == Water-independent Water-dep. == Water-dependent

Total Excess Cancer Risk CNRS(i,p,t)*** for Initially Existent Radionuclides (i) and Pathways (p)
and Fraction of Total Risk at t= 3.000E+02 years

Water Independent Pathways (Inhalation excludes radon)

Radio-	Ground		Inhalation		Radon		Plant		Meat		Milk		Soil	
Nuclide	risk	fract.	risk	fract.	risk	fract.	risk	fract.	risk	fract.	risk	fract.	risk	fract.
Cs-137	1.394E-09	0.0001	5.568E-15	0.0000	0.000E+00	0.0000	7.873E-11	0.0000	6.885E-12	0.0000	2.248E-12	0.0000	6.193E-13	0.0000
Pb-210	5.490E-13	0.0000	3.543E-13	0.0000	0.000E+00	0.0000	4.199E-10	0.0000	1.436E-12	0.0000	6.994E-13	0.0000	1.321E-11	0.0000
Ra-226	1.304E-05	0.6056	8.309E-09	0.0004	0.000E+00	0.0000	8.248E-06	0.3829	2.681E-08	0.0012	1.950E-08	0.0009	1.880E-07	0.0087
Sr-90	7.019E-12	0.0000	1.402E-14	0.0000	0.000E+00	0.0000	9.789E-10	0.0000	1.977E-11	0.0000	5.869E-12	0.0000	1.027E-12	0.0000
Total	1.305E-05	0.6057	8.310E-09	0.0004	0.000E+00	0.0000	8.250E-06	0.3830	2.684E-08	0.0012	1.950E-08	0.0009	1.880E-07	0.0087

Total Excess Cancer Risk CNRS(i,p,t)*** for Initially Existent Radionuclides (i) and Pathways (p)
and Fraction of Total Risk at t= 3.000E+02 years

Water Dependent Pathways

Radio-	Water		Fish		Radon		Plant		Meat		Milk		All pathways	
Nuclide	risk	fract.	risk	fract.	risk	fract.	risk	fract.	risk	fract.	risk	fract.	risk	fract.
Cs-137	0.000E+00	0.0000	0.000E+00	0.0000	0.000E+00	0.0000	0.000E+00	0.0000	0.000E+00	0.0000	0.000E+00	0.0000	1.483E-09	0.0001
Pb-210	0.000E+00	0.0000	0.000E+00	0.0000	0.000E+00	0.0000	0.000E+00	0.0000	0.000E+00	0.0000	0.000E+00	0.0000	4.361E-10	0.0000
Ra-226	0.000E+00	0.0000	0.000E+00	0.0000	0.000E+00	0.0000	0.000E+00	0.0000	0.000E+00	0.0000	0.000E+00	0.0000	2.154E-05	0.9998
Sr-90	8.855E-10	0.0000	4.455E-13	0.0000	0.000E+00	0.0000	5.472E-11	0.0000	5.686E-12	0.0000	3.104E-12	0.0000	1.962E-09	0.0001
Total	8.855E-10	0.0000	4.455E-13	0.0000	0.000E+00	0.0000	5.472E-11	0.0000	5.686E-12	0.0000	3.104E-12	0.0000	2.154E-05	1.0000

***CNRSI(i,p,t) includes contribution from decay daughter radionuclides

Amount of Intake Quantities QINT(i,p,t) for Individual Radionuclides (i) and Pathways (p)
As pCi/yr at t= 1.000E+03 years

Radio-	Water Independent Pathways (Inhalation w/o radon)					Water Dependent Pathways					
Nuclide	Inhalation	Plant	Meat	Milk	Soil	Water	Fish	Plant	Meat	Milk	Ingestion*
Cs-137	2.120E-13	8.978E-09	7.851E-10	2.563E-10	7.062E-11	0.000E+00	0.000E+00	0.000E+00	0.000E+00	0.000E+00	1.009E-08
Pb-210	6.982E-04	7.415E+00	2.553E-02	1.239E-02	2.325E-01	1.888E+02	3.045E-01	8.428E+00	9.387E-02	7.691E-02	2.054E+02
Ra-226	6.725E-04	2.848E+01	8.303E-02	1.017E-01	2.240E-01	2.686E+02	1.255E-01	1.208E+01	1.666E-01	3.645E-01	3.102E+02
Sr-90	1.979E-15	6.286E-10	1.269E-11	3.768E-12	6.592E-13	2.397E-09	9.365E-13	1.151E-10	1.197E-11	6.527E-12	3.177E-09

* Sum of all ingestion pathways, i.e. water independent plant, meat, milk, soil
and water-dependent water, fish, plant, meat, milk pathways

Amount of Intake Quantities QINT9(irn,i,t) and QINT9W(irn,i,t) for Inhalation of
Radon and its Decay Products as pCi/yr at t= 1.000E+03 years

Radon	Radionuclides							
Pathway	Rn-222	Po-218	Pb-214	Bi-214	Rn-220	Po-216	Pb-212	Bi-212
Water-ind.	0.000E+00	0.000E+00	0.000E+00	0.000E+00	0.000E+00	0.000E+00	0.000E+00	0.000E+00
Water-dep.	0.000E+00	0.000E+00	0.000E+00	0.000E+00	0.000E+00	0.000E+00	0.000E+00	0.000E+00
Total	0.000E+00	0.000E+00	0.000E+00	0.000E+00	0.000E+00	0.000E+00	0.000E+00	0.000E+00

Water-ind. == Water-independent Water-dep. == Water-dependent

Excess Cancer Risks CNRS(i,p,t) for Individual Radionuclides (i) and Pathways (p)
and Fraction of Total Risk at t= 1.000E+03 years

Water Independent Pathways (Inhalation excludes radon)

Radio-	Ground		Inhalation		Plant		Meat		Milk		Soil	
Nuclide	risk	fract.	risk	fract.	risk	fract.	risk	fract.	risk	fract.	risk	fract.
Cs-137	1.286E-16	0.0000	5.137E-22	0.0000	7.263E-18	0.0000	6.351E-19	0.0000	2.074E-19	0.0000	5.713E-20	0.0000
Pb-210	9.574E-10	0.0000	6.178E-10	0.0000	7.345E-07	0.0327	2.529E-09	0.0001	1.228E-09	0.0001	2.304E-08	0.0010
Ra-226	1.828E-06	0.0815	5.470E-10	0.0000	4.217E-07	0.0188	1.230E-09	0.0001	1.506E-09	0.0001	3.317E-09	0.0001
Sr-90	8.570E-21	0.0000	1.712E-23	0.0000	1.195E-18	0.0000	2.414E-20	0.0000	7.166E-21	0.0000	1.253E-21	0.0000
Total	1.829E-06	0.0815	1.165E-09	0.0001	1.156E-06	0.0516	3.759E-09	0.0002	2.733E-09	0.0001	2.635E-08	0.0012

Excess Cancer Risks CNRS(i,p,t) for Individual Radionuclides (i) and Pathways (p)
and Fraction of Total Risk at t= 1.000E+03 years

Water Dependent Pathways

Radio-	Water		Fish		Plant		Meat		Milk		All Pathways**	
Nuclide	risk	fract.	risk	fract.	risk	fract.	risk	fract.	risk	fract.	risk	fract.
Cs-137	0.000E+00	0.0000	0.000E+00	0.0000	0.000E+00	0.0000	0.000E+00	0.0000	0.000E+00	0.0000	1.368E-16	0.0000
Pb-210	1.516E-05	0.6760	3.166E-08	0.0014	8.762E-07	0.0391	9.758E-09	0.0004	7.995E-09	0.0004	1.685E-05	0.7513
Ra-226	3.125E-06	0.1393	1.949E-09	0.0001	1.877E-07	0.0084	2.589E-09	0.0001	5.663E-09	0.0003	5.579E-06	0.2487
Sr-90	3.519E-18	0.0000	1.771E-21	0.0000	2.176E-19	0.0000	2.264E-20	0.0000	1.234E-20	0.0000	5.010E-18	0.0000
Total	1.829E-05	0.8153	3.361E-08	0.0015	1.064E-06	0.0474	1.235E-08	0.0006	1.366E-08	0.0006	2.243E-05	1.0000

** Sum of water independent ground, inhalation, plant, meat, milk, soil
and water dependent water, fish, plant, meat, milk pathways

Excess Cancer Risks CNRS9(irn,i,t) and CNRS9W(irn,i,t) for Inhalation of
Radon and its Decay Products at t= 1.000E+03 years

Radon	Radionuclides							
Pathway	Rn-222	Po-218	Pb-214	Bi-214	Rn-220	Po-216	Pb-212	Bi-212
Water-ind.	0.000E+00	0.000E+00	0.000E+00	0.000E+00	0.000E+00	0.000E+00	0.000E+00	0.000E+00
Water-dep.	0.000E+00	0.000E+00	0.000E+00	0.000E+00	0.000E+00	0.000E+00	0.000E+00	0.000E+00
Total	0.000E+00	0.000E+00	0.000E+00	0.000E+00	0.000E+00	0.000E+00	0.000E+00	0.000E+00

Water-ind. == Water-independent Water-dep. == Water-dependent

Total Excess Cancer Risk CNRS(i,p,t)*** for Initially Existent Radionuclides (i) and Pathways (p)
and Fraction of Total Risk at t= 1.000E+03 years

Water Independent Pathways (Inhalation excludes radon)

Radio-	Ground		Inhalation		Radon		Plant		Meat		Milk		Soil	
Nuclide	risk	fract.	risk	fract.	risk	fract.	risk	fract.	risk	fract.	risk	fract.	risk	fract.
Cs-137	1.286E-16	0.0000	5.137E-22	0.0000	0.000E+00	0.0000	7.263E-18	0.0000	6.351E-19	0.0000	2.074E-19	0.0000	5.713E-20	0.0000
Pb-210	6.090E-23	0.0000	3.930E-23	0.0000	0.000E+00	0.0000	4.658E-20	0.0000	1.592E-22	0.0000	7.759E-23	0.0000	1.465E-21	0.0000
Ra-226	1.829E-06	0.0815	1.165E-09	0.0001	0.000E+00	0.0000	1.156E-06	0.0516	3.759E-09	0.0002	2.733E-09	0.0001	2.635E-08	0.0012
Sr-90	8.570E-21	0.0000	1.712E-23	0.0000	0.000E+00	0.0000	1.195E-18	0.0000	2.414E-20	0.0000	7.166E-21	0.0000	1.253E-21	0.0000
Total	1.829E-06	0.0815	1.165E-09	0.0001	0.000E+00	0.0000	1.156E-06	0.0516	3.759E-09	0.0002	2.733E-09	0.0001	2.635E-08	0.0012

Intrisk : RESRAD Default Parameters
File : C:\RESRAD_FAMILY\RESRAD\6.5\USERFILES\PARCEL G SURVEY UNIT 119 TRENCH MDA.RAD

Total Excess Cancer Risk CNRS(i,p,t)*** for Initially Existent Radionuclides (i) and Pathways (p)
and Fraction of Total Risk at t= 1.000E+03 years

Water Dependent Pathways

Radio-	Water		Fish		Radon		Plant		Meat		Milk		All pathways	
Nuclide	risk	fract.	risk	fract.	risk	fract.	risk	fract.	risk	fract.	risk	fract.	risk	fract.
Cs-137	0.000E+00	0.0000	0.000E+00	0.0000	0.000E+00	0.0000	0.000E+00	0.0000	0.000E+00	0.0000	0.000E+00	0.0000	1.368E-16	0.0000
Pb-210	2.577E-19	0.0000	5.382E-22	0.0000	0.000E+00	0.0000	1.488E-20	0.0000	1.654E-22	0.0000	1.357E-22	0.0000	3.218E-19	0.0000
Ra-226	1.829E-05	0.8153	3.361E-08	0.0015	0.000E+00	0.0000	1.064E-06	0.0474	1.235E-08	0.0006	1.366E-08	0.0006	2.243E-05	1.0000
Sr-90	3.519E-18	0.0000	1.771E-21	0.0000	0.000E+00	0.0000	2.176E-19	0.0000	2.264E-20	0.0000	1.234E-20	0.0000	5.010E-18	0.0000
Total	1.829E-05	0.8153	3.361E-08	0.0015	0.000E+00	0.0000	1.064E-06	0.0474	1.235E-08	0.0006	1.366E-08	0.0006	2.243E-05	1.0000

***CNRSI(i,p,t) includes contribution from decay daughter radionuclides

ATTACHMENT 6

RESPONSE TO COMMENTS

This page intentionally left blank.

RESPONSE TO COMMENTS
DRAFT SURVEY UNIT PROJECT REPORTS FOR SURVEY UNITS 119, 120, 121, 122, AND 123 (WORK PACKAGE #31)
PARCEL G SANITARY SEWER AND STORM DRAIN REMOVAL PROJECT
HUNTERS POINT SHIPYARD
SAN FRANCISCO, CALIFORNIA

Comments from Ryan Miya, Ph.D.
Senior Hazardous Substances Scientist
San Francisco Peninsula Team Leader
Brownfields and Environmental Restoration Program – Berkeley
Department of Toxic Substances Control

The California Department of Public Health's Environmental Management Branch has also received and reviewed the Draft SUPRs and has no further comments.

Comments Dated: January 26, 2011

SPECIFIC COMMENTS TO ALL DRAFT SUPRs	RESPONSE
Comment 1. Section 3.2.1 – Trench Survey Unit.	
(a) Please provide the dates of excavation, sampling, and backfilling at each Survey Unit.	**Response 1a.** A complete discussion of the radiological activities performed for each trench survey unit, including dates of excavation, sampling, and backfilling, is provided in the Parcel G Removal Action Completion Report (RACR).
(b) The total volume of material that was remediated from each trench survey unit identified as having contamination present that exceeded the release criteria should be presented in the text.	**Response 1b.** The volume of remediated material for each trench survey unit is provided in the Parcel G RACR text and Table 3-8.
Comment 2. Section 3.2.2 – Excavated Soil Unit(s)/Import Fill Material. Please specify if any additional analyses on the import fill material / excavated soil units beyond the radiological analyses were conducted in order to verify the quality of the backfill.	**Response 2.** The Navy conducted additional soil analyses only if the origin of the excavated soil was from an identified Installation Restoration site. If the excavated soil was not obtained from an Installation Restoration site, only radiological analyses were performed. However, additional analyses for chemicals of concern were performed on the import fill material as specified in Section 4.2 of the Sampling and Analysis Plan. The Navy has provided this information in the Survey Unit Project Report Abstract, Section 3.2.6.

ED_004747_00002085-00278

RESPONSE TO COMMENTS DRAFT SURVEY UNIT PROJECT REPORTS FOR SURVEY UNITS 119, 120, 121, 122, AND 123 (WORK PACKAGE #31) PARCEL G SANITARY SEWER AND STORM DRAIN REMOVAL PROJECT HUNTERS POINT SHIPYARD SAN FRANCISCO, CALIFORNIA	
Comment 3. General comment. Please briefly explain why there are no pipe segment scans as well as sediment analyses from the removed pipe segments (for example, not enough sediment volume to collect samples, majority of pipe segments disintegrated upon removal, etc.).	**Response 3.** A complete discussion of each trench survey unit, including sediment sample analyses, pipe survey results, and final disposition, is provided in the Parcel G RACR text for each trench survey unit and in Tables 3-5 and 3-6.
SPECIFIC COMMENT TO DRAFT SUPR FOR SURVEY UNIT 119	
Comment 4. Section 3.2 – Survey Unit. The text states that the spoils of the excavation were not used for backfill because some of the chemicals of concern associated with IR Sites 09 and 33 were "above the reuse criteria." It is unclear if all soils with contaminants exceeding reuse criteria were removed. Any potentially impacted soils exceeding remediation goals established in the 2009 Parcel G Record of Decision that remain in place will need to be addressed and documented as a component of the forthcoming Parcel G Remedial Action Completion Report.	**Response 4.** All soils exceeding the reuse criteria for any chemicals of concern were not used as backfill. This material was properly disposed of as non-Low Level Radiological Waste after being surveyed and cleared of radiological concerns. Additional information can be found in Section 3.3 and Table 3-4 of the Parcel G RACR.