EA Engineering, Science, and Technology, Inc., PBC

405 State Highway 121 (Bypass)
Building C Suite 100
Lewisville, TX 75067
Telephone: 972-315-3922
Fax: 972-315-5181
www.eaest.com

11 December 2018

Mr. Stephen Pereira
Task Order Monitor
U.S. Environmental Protection Agency (EPA) Region 6
1445 Ross Avenue, Suite 1200
Dallas, Texas 75202-2733

RE: Sampling and Analysis Plan for Remedial Investigation, Revision 00
Lane Plating Works, Inc. Superfund Site
Dallas, Dallas County, Texas
Remedial Action Contract 2
Contract: EP-W-06-004
Task Order: 68HE0618F0309

EA Engineering, Science, and Technology, Inc., PBC (EA) is enclosing one hard copy and two electronic copies on compact disc (CD) of the Sampling and Analysis Plan, Revision 00 for the above-referenced Task Order. As requested, one electronic copy (on CD) has also been submitted to Ms. Rebecca Storms, Texas Commission on Environmental Quality (TCEQ) Project Manager. An electronic copy of this deliverable was also submitted via email on 11 December 2018.

Please do not hesitate to contact me at (972) 315-3922 if you have any questions.

Sincerely,

Mark Paddack
Project Manager

Enclosure

cc: Brian Delaney, EPA Contract Officer (letter only)
Rebecca Storms, TCEQ Project Manager (one electronic copy via CD)
Tim Startz, EA Program Manager (letter only)
File

TRANSMITTAL OF DOCUMENTS FOR ACCEPTANCE BY EPA		DATE: **11 December 2018**	TRANSMITTAL NO.: **0003**
TO: **Mr. Stephen Pereira** **U.S. Environmental Protection Agency Region 6**		FROM: **Mark Paddack** **EA Engineering, Science, and Technology, Inc., PBC**	
SUBTASK NO.	DELIVERABLE	NO. OF COPIES	
1.2.1	Sampling and Analysis Plan for Remedial Investigation, Revision 00 Lane Plating Works, Inc. Superfund Site Dallas, Dallas County, Texas	EPA - 1 hard copy; 2 electronic copies on compact disc; 1 electronic copy via email TCEQ - 1 electronic copy on compact disc; 1 electronic copy via email	
ACCEPTANCE ACTION			
DOCUMENTS FOUND ACCEPTABLE (LIST BY SUBTASK NO.)		NAME/TITLE/SIGNATURE OF REVIEWER DATE	

Sampling and Analysis Plan for Remedial Investigation

Lane Plating Works, Inc. Superfund Site
Dallas, Dallas County, Texas
EPA Identification No. TXN000605240

Remedial Action Contract 2 Full Service
Contract No.: EP-W-06-004
Task Order No.: 68HE0618F0309

Prepared for

U.S. Environmental Protection Agency
Region 6
1445 Ross Avenue
Dallas, Texas 75202-2733

Prepared by

EA Engineering, Science, and Technology, Inc., PBC
405 State Highway 121 (Bypass)
Building C, Suite 100
Lewisville, Texas 75067
(972) 315-3922

December 2018
Revision: 00
EA Project No. 14342.168

Sampling and Analysis Plan for Remedial Investigation

Lane Plating Works, Inc. Superfund Site
Dallas, Dallas County, Texas
EPA Identification No. TXN000605240

Remedial Action Contract 2 Full Service
Contract No.: EP-W-06-004
Task Order No.: 68HE0618F0309

11 December 2018

Tim Startz
EA Program Manager

Date

11 December 2018

Frank Barranco, P.E., P.G., PhD (EA)
EA Quality Assurance Officer

Date

Stephen Pereira
U.S. Environmental Protection Agency Region 6 Task Order Monitor

Date

CONTENTS

Page

LIST OF FIGURES
LIST OF TABLES
LIST OF ACRONYMS AND ABBREVIATIONS

1. PROJECT DESCRIPTION AND MANAGEMENT 1
   1.1 PROBLEM DEFINITION AND BACKGROUND 2
      1.1.1 Purpose of the Investigation 3
      1.1.2 Site Background and History 3
      1.1.3 Summary of Previous Investigations 4
      1.1.4 Site Description 6
   1.2 DESCRIPTION OF PROJECT OBJECTIVES AND TASKS 11
      1.2.1 Project Objectives 11
      1.2.2 Project Tasks 11
      1.2.3 Project Sampling Approach 12
   1.3 DATA AND MEASUREMENT QUALITY OBJECTIVES 12
      1.3.1 Data Quality Objectives 12
      1.3.2 Measurement Quality Objectives 15
   1.4 SPECIAL TRAINING REQUIREMENTS AND CERTIFICATION 19
      1.4.1 Safety and Health Training 19
      1.4.2 Subcontractor Training 20
   1.5 DOCUMENTATION AND RECORDS 20
      1.5.1 Field Documentation 20
      1.5.2 Laboratory Documentation 21
      1.5.3 Level 4 Type Data Package 22
      1.5.4 Reports Generated 23

2. DATA GENERATION AND ACQUISITION 23
   2.1 SAMPLING PROCESS DESIGN 23
   2.2 MOBILIZATION 29
      2.2.1 Mobilization 29
      2.2.2 Site Access 29
   2.3 SAMPLING METHODOLOGY 30
      2.3.1 Ground Water Sampling 31

ED_004144A_00000101-00005

2.3.2 Soil Investigation 33
2.3.3 Monitoring Well Installation....35
2.3.4 Surface Water and Sediment Sampling 38
2.3.5 Biota....40
2.3.6 Vapor Intrusion Investigation 40
2.3.7 Sample Container, Volume, Preservation, and Holding Time Requirements 41
2.3.8 Decontamination....41
2.3.9 Investigation-Derived Waste 41
2.3.10 Sample Designation 41
2.3.11 Field Duplicate Sample Designation 43
2.3.12 Matrix Spike/Matrix Spike Duplicate Sample Designation (for organic analyses)....43
2.3.13 Matrix Spike/Matrix Duplicate Sample Designation (for inorganic analyses)....43
2.3.14 Trip, Field, and Equipment Rinsate Blank Sample Designation 43

2.4 SAMPLE HANDLING AND CUSTODY 44

2.4.1 Sample Documentation....44

2.5 ANALYTICAL METHODS REQUIREMENTS.... 46

2.5.1 Field Analytical Methods....47
2.5.2 Fixed-Laboratory Analytical Methods....47

2.6 QUALITY CONTROL REQUIREMENTS 47

2.6.1 Field Quality Control Requirements....47
2.6.2 Laboratory Quality Control Requirements 48

2.7 INSTRUMENT AND EQUIPMENT TESTING, INSPECTION, AND MAINTENANCE REQUIREMENTS 50

2.7.1 General Requirements....51
2.7.2 Field Equipment and Instruments 51
2.7.3 Laboratory Instruments....51

2.8 INSTRUMENT CALIBRATION AND FREQUENCY 52

2.8.1 Field Equipment....52
2.8.2 Laboratory Instruments....53

2.9 REQUIREMENTS FOR INSPECTION AND ACCEPTANCE OF SUPPLIES AND CONSUMABLES 53

ED_004144A_00000101-00006

2.10 DATA ACQUISITION REQUIREMENTS (NON-DIRECT MEASUREMENTS) 53
2.11 DATA MANAGEMENT 54

3. ASSESSMENT AND OVERSIGHT 55
3.1 ASSESSMENT AND RESPONSE ACTIONS 55
3.2 REPORTS TO MANAGEMENT 56

4. DATA VALIDATION AND USABILITY 57
4.1 DATA REVIEW AND REDUCTION REQUIREMENTS 57
4.2 VALIDATION AND VERIFICATION METHODS 57

4.2.1 Data Validation Responsibilities 58
4.2.2 Data Validation Procedures 58

4.3 RECONCILIATION WITH DATA QUALITY OBJECTIVES 59

5. REFERENCES 61

APPENDIX A: SAMPLING DESIGN MATRIX
APPENDIX B: EPA CONTRACT LABORATORY PROGRAM CONTRACT REQUIRED QUANTITATION LIMITS
APPENDIX C: STANDARD OPERATING PROCEDURES
APPENDIX D: SCREENING VALUES
APPENDIX E: BLANK FIELD FORMS
APPENDIX F: SOIL GAS AND INDOOR AIR SAMPLING PROCEDURES
APPENDIX G: FIELD SAMPLERS GUIDE
APPENDIX H: ITRC FACT SHEET FOR PFC SAMPLING, HANDING, AND ANALYSIS

LIST OF FIGURES

Number	Title
1	Project Organization
2	Site Location Map
3	Site Features

LIST OF TABLES

Number	Title
1	Elements of EPA Quality Assurance Project Plans QA/R-5 in Relation to this SAP
2	Data Quality Objectives
3	Data Quality Indicators for Laboratory Data Obtained from Analysis of Investigation Samples
4	Analytical Parameters, Methods, Sample Volume and Holding Times
5	Existing Wells and Phase 1 RI Monitoring Wells to be Installed
6	Standard Operating Procedures
7	Frequency of Field Quality Control Samples

ED_004144A_00000101-00008

LIST OF ACRONYMS AND ABBREVIATIONS

ASG	Active soil gas
AVS/SEM	Acid volatile sulfide/simultaneously extracted metals
bgs	Below ground surface
CFR	Code of Federal Regulations
CLP	Contract Laboratory Program
COC	Chain-of-custody
COPC	Contaminant of potential concern
CRQL	Contract Required Quantitation Limit
DPT	Direct-Push Technology
DQA	Data quality assessment
DQO	Data quality objective
EA	EA Engineering, Science, and Technology, Inc., PBC
EDD	Electronic data deliverable
EPA	U.S. Environmental Protection Agency
ft.	Feet (foot)
FS	Feasibility Study
HASP	Health and Safety Plan
HRS	Hazardous Ranking System
HSA	Hollow-stem auger
HWTB	Hazardous Waste Treatment Building
IDW	Investigation-derived waste
in.	Inch (inches)
ITRC	Interstate Technology Regulatory Council
LCS	Laboratory control sample
MCL	Maximum Contaminant Level
MDL	Method Detection Limit
mg/kg	Milligram(s) per kilogram
MS	Matrix spike
MSD	Matrix spike duplicate
NOE	Notice of Enforcement
ORP	Oxidation-reduction potential
OSHA	Occupational Safety and Health Administration

ED_004144A_00000101-00009

LIST OF ACRONYMS AND ABBREVIATIONS (CONTINUED)

PA	Preliminary Assessment
PARCCS	Precision, accuracy, representativeness, completeness, comparability, sensitivity
PFC	Perfluorinated chemicals
PCB	Polychlorinated biphenyls
PPE	Personal protective equipment
PSG	Passive soil gas
PSI	Pounds per square inch
PVC	Polyvinyl chloride
PWS	Public water supply
QA	Quality assurance
QAPP	Quality Assurance Project Plan
QC	Quality control
RA	Removal Assessment
RAC	Remedial Action Contract
RI	Remedial Investigation
ROD	Record of Decision
RPD	Relative percent difference
RSL	Regional Screening Level
SAP	Sampling and Analysis Plan
SCDM	Superfund Chemical Data Matrix
site	Lane Plating Works, Inc. Superfund Site
SOP	Standard operating procedure
SOW	Statement of Work
SVOC	Semi-volatile organic compound
TAC	Texas Administrative Code
TAL	Target Analyte List
TCEQ	Texas Commission on Environmental Quality
TDS	Total dissolved solids
TOC	Total organic carbon
TOM	Task Order Monitor
TPH	Total Petroleum Hydrocarbon
TSS	Total suspended solids
TXDWW	TCEQ Texas Drinking Water Watch
VOC	Volatile organic compound

ED_004144A_00000101-00010

1. PROJECT DESCRIPTION AND MANAGEMENT

EA Engineering, Science, and Technology, Inc. PBC (EA) has been authorized by the U.S. Environmental Protection Agency (EPA), under Remedial Action Contract (RAC) II No. EP-W-06-004, Task Order 68HE0618F0309, to conduct a Remedial Investigation (RI) at the Lane Plating Works, Inc. Superfund Site (site). EA has prepared this Sampling and Analysis Plan (SAP) in accordance with: (1) specifications provided in the EPA Statement of Work (SOW) (EPA 2018c), (2) the 5 September 2018 EPA response to EA Questions on the SOW, (3) a scoping meeting held via teleconference call on 6 September 2018, (4) the EPA-approved EA Work Plan (EA 2018a), and (5) 40 Code of Federal Regulations (CFR) 300.415(b)(4)(ii).

This SAP is a combination Quality Assurance Project Plan (QAPP) and Field Sampling Plan. It details data collection methods, proposed sample locations and frequency, sampling equipment and procedures, and analytical methods required to collect sufficient data for the RI activities at the site. Combining these two standard deliverables into a single document allows a streamlining of the planning process, while ensuring that data collected are of sufficient quality for its intended use. Table 1 below demonstrates how this SAP addresses all elements of a QAPP required by EPA for planning documents at hazardous waste sites (EPA 2001, 2002).

Table 1. Elements of EPA Quality Assurance Project Plans QA/R-5 in Relation to this SAP

EPA QA/R-5 QAPP Element		EA SAP	
A1	Title and Approval Sheet	Title and Approval Sheet	
A2	Table of Contents	Table of Contents	
A3	Distribution List	Distribution List	
A4	Project/Task Organization	1.0	Project Description and Management
A5	Problem Definition/Background	1.1	Problem Definition and Background
A6	Project/Task Description	1.2	Description of Project Objectives and Tasks
A7	Quality Objectives and Criteria	1.3	Data and Measurement Quality Objectives
A8	Special Training/Certification	1.4	Special Training Requirements and Certification
A9	Documents and Records	1.5	Documents and Records
B1	Sampling Process Design	2.1	Sampling Process Design
B2	Sampling Methods	2.3	Sampling Methodology
B3	Sample Handling and Custody	2.3	Sample Handling and Custody
B4	Analytical Methods	2.4	Analytical Methods Requirements
B5	Quality Control	2.5	Quality Control Requirements
B6	Instrument/Equipment Testing, Inspection, and Maintenance	2.6	Instrument and Equipment Testing, Inspection, and Maintenance Requirements
B7	Instrument/Equipment Calibration and Frequency	2.7	Instrument Calibration and Frequency
B8	Inspection/Acceptance of Supplies and Consumables	2.8	Requirements for Inspection and Acceptance of Supplies and Consumables
B9	Non-Direct Measurements	2.9	Data Acquisition Requirements (Non-Direct Measurements)
B10	Data Management	2.10	Data Management
C1	Assessment and Response Actions	3.1	Assessment and Response Actions
C2	Reports to Management	3.2	Reports to Management

ED_004144A_00000101-00011

EPA QA/R-5 QAPP Element	EA SAP
D1 Data Review, Verification, and Validation	4.1 Data Review and Reduction Requirements
D2 Validation and Verification Methods	4.2 Validation and Verification Methods
D3 Reconciliation with User Requirements	4.3 Reconciliation with Data Quality Objectives

NOTES:
EA = EA Engineering, Science, and Technology, Inc. PBC
EPA = U.S. Environmental Protection Agency
QAPP = Quality Assurance Project Plan
SAP = Sampling and Analysis Plan

Upon implementation, this SAP should be used in conjunction with the site-specific Health and Safety Plan (HASP) (EA 2018b).

This SAP has been prepared in accordance with EA's Quality Management Plan (EA 2014) and meets requirements set forth in *EPA Requirements for Quality Assurance Project Plans (QA/R-5)* (EPA 2001) and *Guidance for Quality Assurance Project Plans (QA/G-5)* (EPA 2002).

This SAP details the project specific data quality objectives (DQOs) and describes procedures to ensure that the DQOs are met and that the quality of data (represented by precision, accuracy, representativeness, completeness, comparability, and sensitivity (PARCCS) is known and documented. The SAP presents the project description, project organization and responsibilities, and quality assurance (QA) objectives associated with the sampling and analytical services to be provided in support of RI activities at the site.

The overall QA objectives are as follows:

- Obtain data of known quality to support goals set forth for the RI
- Attain quality control (QC) requirements for analyses as specified in this SAP
- Document all aspects of the quality program including performance of the work and any required changes to work at the site.

The EPA Region 6 Task Order Monitor (TOM), Mr. Stephen Pereira, is responsible for the project oversight. The Project Officer for EPA Region 6 is Mr. William G. Johnson, Jr. The Contracting Officer for EPA Region 6 is Mr. Brian Delaney. EA will perform all tasks under this Task Order in accordance with this SAP. The EA Project Manager, Mr. Mark Paddack, is responsible for implementing all activities required by this Task Order. Figure 1 presents the proposed project organization for this Task Order.

1.1 PROBLEM DEFINITION AND BACKGROUND

This section describes the following:

- Purpose of the investigation (Section 1.1.1)
- Site background and history (Section 1.1.2)

ED_004144A_00000101-00012

- Summary of previous investigations (Section 1.1.3)
- Site description (Section 1.1.4).

1.1.1 Purpose of the Investigation

The purpose of this investigation is to conduct an RI at the site to develop a remedy that eliminates, reduces, or controls risk to human health and the environment. The goal is to collect an adequate amount of data necessary to support the selection of an approach for site remediation that can be used to support a Record of Decision (ROD). The EPA Task Order SOW (EPA 2018c) and EPA-approved Work Plan (EA 2018a) set forth the framework and requirements for this effort.

1.1.2 Site Background and History

Based on information adapted from the 2018 Hazardous Ranking System (HRS) Documentation Record (EPA 2018a), the site is located at 5322 Bonnie View Road, approximately five miles south of downtown Dallas, Dallas County, Texas (Figure 2). It is situated immediately east of Bonnie View Road on 4.6 acres and is surrounded on all sides by open or wooded land. Land use is listed as residential and commercial in the area. The original facility building and adjacent structures are still present and include the main facility building where the majority of electroplating operations took place, a shed structure known as the Hazardous Waste Treatment Building (HWTB), and a former wastewater treatment building and miscellaneous tractor trailers located south of the facility and HWTB. A barbed wire and locked chain-link fence surrounds the property.

Asphalt/concrete cover extends from the facility entrance to the driveway and footprint around the facility building. Soil and vegetation are exposed on all other sides. Two old, unused water wells are located on the north side of the facility building. Old equipment and trash surround the facility in open and wooded areas located to the east and south. According to the Dallas Central Appraisal District, the office building was built in 1950, and the facility property is currently owned by Stag Management, Inc., with John R. Lane listed as president. Stag Management, Inc. also owns the adjoining property located east of the facility at 5156 Bonnie View Road, and the Lane residence is located approximately 500 feet (ft.) north of the facility. Bankruptcy schedules show that Lane Plating Works, Inc. owns equipment and accounts receivables and leases the 5322 Bonnie View Road property from Stag Management, Inc. The closest residences are located approximately 200 to 300 ft. west of the facility along Bonnie View Road, and a baseball diamond is located approximately 650 ft. south of the facility. There are no daycare facilities, schools, or churches located in close proximity to the facility.

The site was historically occupied by a former electroplating facility that conducted primarily hard chromium and cadmium plating for approximately 90 years until 2015. Additional processes included chromate dips, chromic acid anodize, hard chrome plating using chromic acid, cadmium plating, copper plating using copper cyanide, zinc plating aluminum using nitric acid and zinc cyanide, nickel plating using nickel sulfate, black oxide coating, electroless nickel, passivation, machining and grinding, stripping of metal parts in acid, pretreatment of metal parts

ED_004144A_00000101-00013

using sodium hydroxide and sulfuric acid, operating a lead melting pot to repair anodes used in plating baths, and electroplating wastewater treatment. Resource Conservation and Recovery Act and Texas Commission on Environmental Quality (TCEQ) Notice of Registration records document the following waste streams: corrosive and reactive waste, cadmium, chromium, lead, spent chromic acid solution, spent muriatic acid, chromate, metals filings and dust, cyanide waste, caustic waste, caustic soda solid (tank bottoms), and wastewater treatment sludges from electroplating operations. Operations ceased in 2015 with numerous violations, investigations, and bankruptcy.

1.1.3 Summary of Previous Investigations

Based on information adapted from the 2018 HRS Document Record (EPA 2018a), the site has been investigated by several state and federal agencies over the past 40 years, and releases of plating wastes to onsite soils have been documented by recent investigations. TCEQ conducted investigations at the site in February 2010 and January 2011. Analytical results from soil samples collected from a waste pile and around the facility foundation indicated leachable cadmium, chromium, lead, and mercury concentrations. Formal enforcement action was requested based on numerous violations, including the failure to obtain a permit prior to disposal of hazardous waste and to prevent unauthorized discharge of industrial solid waste. A Notice of Enforcement (NOE) letter and a Proposed Agreed Order were transmitted to the facility in April and July 2011, respectively, with a total penalty of $28,350. TCEQ conducted a follow-up investigation in October 2014 and noted several additional issues and alleged violations of waste management, including the failure to install a secondary containment unit for a hazardous waste tank. Onsite soil samples indicated total chromium, hexavalent chromium, antimony, arsenic, cadmium, mercury, and nickel detections above the EPA Superfund Chemical Data Matrix (SCDM) soil exposure pathway benchmarks and lead above the EPA interim screening level.

The Department of Labor Occupational Safety and Health Administration (OSHA) issued $110,200 in proposed penalties to the facility in January 2015 based on inspections made in 2014. Violations were related to the upkeep, use, and provision of required safety equipment and training for employees in addition to proper storage and disposal of chemicals. Specific violations of note included storing sodium hydroxide together with sulfuric acid and exposing employees to hexavalent chromium. Violations documented hexavalent chromium on surfaces inside the facility building. A second NOE letter was transmitted to the facility in March 2015.

TCEQ conducted an investigation in November 2015 to determine if conditions posed an immediate threat to nearby residents and if grinding grit had spread off of the facility property. Grinding grit was observed on the ground surface south and southeast of the HWTB. Leaks, openings in the walls, and yellow stains believed to be chromium were observed in the facility building. Yellow stains were additionally observed on the west side of the facility building on the exterior southeast corner. Soil samples were collected from the southern boundary of the property at a depth of 0-3 inches (in.) below ground surface (bgs). Antimony, arsenic, cadmium, chromium, and mercury were detected above SCDM soil exposure pathway benchmarks, and lead was detected above the screening level.

ED_004144A_00000101-00014

TCEQ conducted a limited removal action in November and December 2015. The scope of work included hazard characterization analysis/chemical characterization of chemicals in the facility lab, lab pack and re-packaging of select chemicals, the removal of chromic acid sludge from two sumps at the facility, and securing the chromic acid waste into poly totes. All outside doors to the facility building were secured and locked, and metal cattle panels were used to secure the first floor windows. As State enforcement was exhausted, TCEQ referred the site to the EPA Region 6 Superfund Program for further evaluation.

Representatives from the TCEQ and EPA Superfund Removals program conducted a facility visit in February 2016 and observed incompatible wastes stored together, staining, visibly impacted soils, wastes appearing to seep underneath the facility foundation, and large volumes of hazardous wastes. Grab samples collected by TCEQ from the two shallow facility water wells in February 2016 contained concentrations of chromium and hexavalent chromium above SCDM ground water pathway benchmarks and the Maximum Contaminant Level (MCL).

In March 2016, the EPA Emergency Management Branch tasked an EPA Region 6 Superfund Technical Assessment Response Team contractor to perform a Removal Assessment (RA) at the site, which is documented in the Removal Report (Weston 2016) completed for the site. A two-phase remedial action was conducted at the site in April and September 2016 (EPA 2018a). Excessive chromium staining on the floor and small pools of plating wastes from ongoing releases were observed in the facility building, in addition to chromium staining on the outside of the building from past spills and releases.

Based on information adapted from the EPA 2018 SOW (EPA 2018c), during the April 2016 remedial action field event, composite five-point soil sampling was conducted within thirty-seven 50 ft. by 50 ft. grids along the exterior of the facility. Within each grid, sample aliquots were collected from each corner and from the center of the grid at a depth of 0 to 6 in. bgs. The aliquots were then combined and containerized as a composite sample. Five biased grab soil samples were collected by the EPA Team in areas previously identified by TCEQ to have elevated concentrations of lead and chromium along the southeastern part of the site. A total of 36 soil samples and 4 liquid waste samples were collected to determine the nature and extent of site related, hazardous constituents associated with electroplating waste (plating waste) in onsite soils. Liquid waste samples were used to verify if liquids, contained in an unknown number of drums and totes, were considered hazardous substances. Soil samples were submitted for analysis of metals and hexavalent chromium. Soil analytical data was compared to the May 2016 Regional Screening Levels (RSLs), Industrial Soil (Target Hazard Quotients = 1.0). The liquid waste characterization results were compared to 40 CFR Part 261. Based on the analytical results, hexavalent chromium, lead, and mercury contaminated soil was present around the footprint of the building. Hexavalent chromium was reported in 17 grids exceeding the EPA RSL of 6.3 milligrams per kilogram (mg/kg). Hexavalent chromium contaminated soil ranged in concentration from 167 mg/kg (Grid E7) to 5,620 mg/kg (Grid G7). Lead exceeded the EPA RSL of 800 mg/kg in six grids. Mercury was observed above instrument detection limits in several grids but only exceeded in one grid above the EPA RSL of 46 mg/kg.

ED_004144A_00000101-00015

During the September 2016 remedial action field event, composite five point soil samples were collected from within approximately 72 grids. Samples were collected at three depth intervals: 0 to 6 in. bgs, 6 to 12 in. bgs, and 12 to 18 in. bgs. Soil samples were submitted for analysis of metals and hexavalent chromium. A total 216 samples (192 normal, 20 duplicate, and 4 equipment) were collected during this sampling event. Samples collected at the 6 to 12 in. interval were placed on hold pending analytical results from the 0 to 6 in. and 12 to 18 in. intervals. Based on the analytical results, hexavalent chromium, lead, and mercury contaminated soil was present around the footprint of the building. Hexavalent chromium was reported in three grids exceeding the May 2016 EPA RSL of 6.3 mg/kg. Hexavalent chromium contaminated soil ranged in concentration from 9.69 mg/kg (Grid H4 at a depth of 18 in.) to 203 mg/kg (Grid E6 at a depth of 6 in.). Lead exceeded the EPA RSL of 800 mg/kg in one grid at a concentration of 3740 mg/kg (E6 at a depth of 6 in.). Mercury was reported in two grids exceeding the EPA RSL of 46 mg/kg, ranging from 46.2 mg/kg (I10 at a depth of 6 in.) to 77.8 mg/kg (E6 at a depth of 6 in.).

Based on information adapted from the 2018 HRS Documentation Record (EPA 2018a), samples of chromic acid waste collected during the 2016 remedial action field events were confirmed to be hazardous. Hazardous characterization identification of waste containers was performed, and remaining vats and sumps were pumped and transferred into compatible containers. Waste containers were transported from the facility to authorized facilities for final disposal in November 2016. The following waste streams were identified: cyanide solution and solids, chromic acid and chromic acid sludges/solids, sulfuric acid, flammable aerosol and liquids, acid solids and liquids, neutral solids and liquids, elemental mercury, caustic solids and liquids, and soil. *In situ* contaminated soils currently remain in place and will be investigated further as part of this RI.

In July 2016, TCEQ also performed a site inspection sampling event to evaluate the surface water pathway (TCEQ 2017). Antimony, cadmium, chromium, copper, lead, mercury, nickel, and zinc were detected at elevated concentrations in soil along the overland segments at depths up to 6 to 8 in. bgs. Of these, arsenic, cadmium, chromium, and mercury were detected above SCDM soil exposure pathway benchmarks, and lead was detected above the screening level in soil. Chromium, cyanide, lead, and mercury in sediment at depths of 0-6 or 6-12 in. bgs, and aluminum, arsenic, chromium, copper, iron, lead, manganese, mercury, nickel, and zinc in surface water were detected at elevated concentrations in the surface water pathway. Of these, aluminum, copper, iron, lead, and zinc were detected above SCDM surface water pathway environmental benchmarks (chronic, fresh criteria continuous concentration).

In January 2018 the HRS Documentation Record was prepared for the site, and in May 2018 the site was placed on the National Priority List.

1.1.4 Site Description

Site description information has been adapted from the 2018 HRS Documentation Record (EPA 2018a), the 2018 National Priority List (EPA 2018b), 2018 EPA SOW (EPA 2018c), and the

ED_004144A_00000101-00016

May 2016 Preliminary Assessment (PA) Report, which was Prepared by TCEQ in cooperation with EPA Region 6 (TCEQ 2016).

1.1.4.1 Physical Site Characterization

The site, as scored in the 2018 HRS Documentation Record (EPA 2018a), consists of four sources and releases of chromium, copper, cyanide, lead, manganese, mercury, nickel, and zinc to the surface water migration pathway. The identified sources include: (1) contaminated soil currently located underneath and surrounding the facility building, (2) underground sumps located inside the facility building, (3) wastes containerized in tanks and other containers, and (4) wastes containerized in drums. The identified targets in the 2018 HRS Documentation Record included fisheries, wetlands, and sensitive environments located within the target distance limit.

Fisheries are located in the Joppa Preserve/Lemmon Lake Park and Trinity River. Habitat known to be used by the state-designated endangered or threatened wood stork and white-faced ibis are located in the Joppa Preserve/Lemmon Lake Park. Freshwater forested/shrub wetlands are located in the site vicinity, Joppa Preserve/Lemmon Lake Park, and along the Trinity River.

The primary receptors near the site consist of the small streams and associated wetlands, making surface water a suspected pathway. An unnamed stream, referred to as Stream 5A2, is located approximately 450 ft. east of the facility and flows south into a small pond located southeast of the facility. Site and area topography slope gently to the south and southeast (Figure 3). Surface water runoff follows two primary overland segments: (1) east along the north side of the facility building and then due south for approximately 500 ft. before reaching a wetland, and (2) southeast of the facility across a field for approximately 400 ft. before reaching a small pond and Stream 5A2 (Figure 3). Stream 5A2 flows south from the small pond for approximately 300 ft. before joining another unnamed stream (Figure 3). The merged stream flows east and eventually discharges into the Trinity River.

Cyanide, lead, mercury, chromium, and hexavalent chromium have been identified as contaminants of potential concern (COPCs) impacting onsite soils, underlying ground water, and sediments downstream from the site. Contaminant levels in onsite soils exceed the EPA RSLs for residential and industrial use (EPA 2018b).

1.1.4.2 Geologic Setting

The site is underlain by Quaternary alluvium and Pleistocene fluviatile terrace deposits. The Quaternary alluvium is comprised of flood plain deposits of gravel, sand, silt, silty clay, and organic matter. Fluviatile terrace deposits consist of gravel, sand, silt, and clay in contiguous terraces. These deposits range in thickness from approximately 0 to 75 ft. bgs. The Quaternary sediments are underlain by the Cretaceous-age Austin Chalk. The upper and lower parts of the Austin Chalk consist of mostly massive microgranular calcite and some interbeds and partings of calcareous clay, with thin bentonitic beds locally in the lower part. The middle part of the Austin Chalk is mostly thin-bedded marl with interbeds of massive chalk. The Austin Chalk has a thickness of approximately 300 to 500 ft. (TCEQ 2016).

Underlying the Austin Chalk is the Eagle Ford Group of Cretaceous age, which is 200 to 300 ft. thick and comprised predominantly of shale with thin beds of limestone and bentonite. The Cretaceous-age Woodbine Formation underlies the Eagle Ford Group. This formation is approximately 175 to 250 ft. thick, and composed mostly of sandstone. The Woodbine is underlain by the Cretaceous-age Washita and Fredericksburg Groups, which consist primarily of limestone, dolomite, marl, and shale. The Fredericksburg and Washita Groups have a combined thickness of approximately 1,250 ft. and separate the Woodbine from the underlying Paluxy Formation of the Trinity Group. The Paluxy Formation is the upper member of the Trinity Group, approximately 400 ft. thick, and is comprised mostly of sand/sandstone and some shale and limestone. The Glen Rose Formation divides the two Trinity Group aquifer formations in the area and consists of limestone, marl, shale, and anhydrite. It can reach thicknesses of up to 1,500 ft. The Twin Mountains Formation, originally named the Travis Peak Formation, consists of sand, silty clay, and siliceous conglomerates of chert, quartzite, and quartz pebbles and has a thickness of up to 1,000 ft. (TCEQ 2016).

1.1.4.3 Aquifer System

The site overlies the Quaternary alluvium and Pleistocene fluviatile terrace deposits and the Austin Chalk. The Quaternary alluvium and Pleistocene fluviatile terrace deposits are generally irregular in thickness and extent in close proximity to the site, as well as along Five Mile Creek and the Trinity River to the east of the site. Several nearby ground water monitoring wells are installed to the northwest, northeast, and east of the site to an average depth of 40 ft. bgs. These monitoring wells are completed in the unconfined alluvium and terrace deposits, with static water levels around 10 ft. bgs. Ground water gradient information is not available for the shallow aquifer. Hydraulic conductivity is low in the Austin Chalk, which is very limited as an aquifer. The Woodbine Aquifer and Twin Mountains Formation of the Trinity Aquifer are also present below the site based on area well drilling logs (TCEQ 2016).

Underlying the Austin Chalk is the Eagle Ford Group. The 200 to 300 ft. thick Eagle Ford Group unconformably overlies the Woodbine Aquifer and acts as a confining unit. The Woodbine Aquifer is categorized by the Texas Water Development Board as a minor aquifer consisting of sandstone interbedded with shale and clay that form three distinct water-bearing zones. The Woodbine Aquifer occurs from approximately 700 to 1,100 ft. bgs and reaches 600 to 700 ft. in thickness in subsurface areas, with freshwater saturated thickness averages of about 160 ft. Based on area well drilling logs, water levels in the Woodbine Aquifer in the vicinity of the site range from 100 to 230 ft. bgs, with total depths of approximately 853 to 1,100 ft. bgs. Ground water gradient in the Woodbine Aquifer is generally to the east-southeast (TCEQ 2016).

The Washita Group underlies the Woodbine and overlies the Fredericksburg Group. The two groups are generally considered a confining unit above the Trinity Aquifer and yield only small amounts of water. The two water-bearing formations of the Trinity Group in the vicinity of the site are the Paluxy and Twin Mountains Formations, separated by the Glen Rose Formation. The Glen Rose Formation only yields small amounts of water to localized areas (TCEQ 2016).

ED_004144A_00000101-00018

The top of the Paluxy Formation occurs from approximately 1,700 to 2,000 ft. bgs, with a maximum thickness of approximately 400 ft. The Paluxy Formation yields small to moderate quantities of fresh to slightly saline water to municipal, industrial, domestic, and livestock wells. The Twin Mountains Formation has a maximum thickness of up to 1,000 ft,. and the top of the formation occurs from approximately 2,300 to 2,800 ft. bgs. It is the primary Cretaceous-age water-bearing formation in the region and yields moderate to large quantities of fresh to slightly saline water to municipal and industrial wells. Ground water gradient in both aquifers is generally to the east. The Trinity is the largest and most prolific aquifer in the region; however, the aquifer has been overdeveloped, resulting in significant water level declines across the region (TCEQ 2016).

The unconfined alluvium, Woodbine Aquifer, and Paluxy Formation of the Trinity Aquifer are unlikely to have interconnectivity in this area as the three aquifers are separated from one another by confining units of the Eagle Ford and Washita/Fredericksburg Groups, as discussed earlier in this section. Interconnectivity between the Paluxy and Twin Mountains Formations of the Trinity Aquifer is also unlikely in the vicinity of the site as they are separated by the Glen Rose Formation, which yields small amounts of water. Additionally, the upper part of the Twin Mountains Formation is mostly claystone, and few wells are developed in the upper part of the formation. The Glen Rose Formation pinches out towards the north and is absent in northern Texas counties where the Paluxy and Twin Mountains Formations coalesce into the Antlers Formation (TCEQ 2016).

The Trinity Aquifer supplies wells for pubic supply, industrial, irrigation, domestic, and livestock use. Irrigation use constitutes a small portion of overall pumpage in the Paluxy and Twin Mountains Formations and is generally limited to irrigation of golf courses and lawns. Irrigation of crops from the Twin Mountains Formation is confined to the outcrop areas located in Hood, Parker, and Wise Counties. Approximately 55 percent of total ground water use in the Twin Mountains Formation is for municipal and industrial purposes. Municipal and domestic use of the Paluxy Formation accounted for approximately 50 and 24 percent of total ground water pumpage, respectively. There is no evidence at this time that ground water is used for irrigation of food or forage crops of five or more acres, for commercial livestock watering, as an ingredient in commercial food preparation, for commercial aquaculture, or for major or designated recreation in close proximity to the site (TCEQ 2016).

Based on information provided in the PA (TCEQ 2016), one domestic well, three PWS wells, two stock wells, eight irrigation wells, and seven industrial wells lie within four miles of the site. The only well located within a mile of the site is an irrigation well. Additional irrigation wells are located within two miles to the northeast and southwest (three wells), within three miles to the east and west (three wells), and within four miles northeast. The nearest PWS wells are located within two, three, and four miles west and southwest of the site and are screened in the Woodbine Aquifer. The closest domestic well is located within three miles east of the site, and two stock wells are located within three and four miles east of the site, all screened within shallow alluvium. Industrial wells are situated within two miles east-northeast (two wells) and four miles north (five wells) of the site. Irrigation and industrial wells are reportedly screened in the shallow alluvium and Woodbine Aquifer.

Water analytical results were not available for the domestic and PWS wells identified in the search. The TCEQ Texas Drinking Water Watch (TXDWW) website lists one of the PWS facilities (Community Water Service Grand Prairie) as buying their water from the City of Grand Prairie, who buys from the Cities of Fort Worth and Midlothian and the Dallas Water Utility. These are all surface water sources of drinking water located west or north of the site. The other PWS facilities are not listed on the TXDWW website. Installation dates of the domestic and PWS wells are old, ranging from the 1940s to the 1970s, and it is unknown if these wells are still in use (TCEQ 2016).

There are two onsite shallow wells of unknown historical use located adjacent north of the facility building (Figure 3). These onsite wells were sampled in February 2016 for metals. WW-1 displayed chromium and hexavalent chromium concentrations that exceeded the MCL and SCDM for these metals, and WW-2 displayed a hexavalent chromium concentration that exceeded the SCDM for this metal. The site is not located within a wellhead protection area (TCEQ 2016).

1.1.4.4 Source of Contamination

The 2018 HRS Documentation Record (EPA 2018a) identifies four sources and releases of chromium, copper, cyanide, lead, manganese, mercury, nickel, and zinc to the surface water migration pathway. The identified sources include: (1) contaminated soil currently located underneath and surrounding the facility building, (2) underground sumps located inside the facility building, (3) wastes containerized in tanks and other containers, and (4) wastes containerized in drums. The identified targets in the 2018 HRS Documentation Record (EPA 2018a) included fisheries, wetlands, and sensitive environments located within the target distance limit. Fisheries are located in the Joppa Preserve/Lemmon Lake Park and Trinity River. Habitat known to be used by the state-designated endangered or threatened wood stork and white-faced ibis are located in the Joppa Preserve/Lemmon Lake Park. Freshwater forested/shrub wetlands are located in the site vicinity, Joppa Preserve/Lemmon Lake Park, and along the Trinity River.

1.1.4.5 Nature and Extent of Contamination

The purpose of the RI will be to determine the nature and extent of COPCs that have been previously identified at the site. Cyanide, lead, mercury, chromium, and hexavalent chromium have been identified as COPCs impacting onsite soils, underlying ground water, and sediments downstream from the site (EPA 2018b). This is supported by:

- The 2016 remedial action data, which indicates that hexavalent chromium, lead, and mercury contaminated soil is present around the footprint of the building (EPA 2018a).
- Two old, unused water wells are located on the north side of the facility building. Grab samples collected by TCEQ from the two shallow wells in February 2016 contained concentrations of chromium and hexavalent chromium above SCDM ground water pathway benchmarks and the MCL (EPA 2018a).

ED_004144A_00000101-00020

- Observed releases of chromium, copper, cyanide, lead, manganese, mercury, nickel, and zinc detected in prior sediment or surface water samples collected from Stream 5A2, the associated small pond, or the merged segment of the unnamed stream and Stream 5A2 (EPA 2018a).

1.2 DESCRIPTION OF PROJECT OBJECTIVES AND TASKS

This section describes the project objectives and tasks for this SAP.

1.2.1 Project Objectives

The primary objective is to conduct a RI at the site leading to the investigation and study of subsurface onsite and offsite soils, surface water, sediment, shallow ground water, and possibly soil gas, indoor air, and biota samples. The goal is to develop an adequate amount of data necessary to support the selection of an approach for site remediation and then to use this data to result in a well-supported Feasibility Study (FS) and ROD. The sampling activities associated with the RI will be conducted in an iterative, phased approach which is discussed further in Section 1.2.3.

1.2.2 Project Tasks

To complete RI activities, EA will perform the following active tasks (with subtasks), which are outlined in the approved Work Plan (EA 2018a):

- Project Planning and Support
- Community Involvement (Inactive)
- Field Investigation/Data Acquisition
- Sample Analysis
- Analytical Support and Data Validation
- Data Evaluation
- Risk Assessment (Inactive)
- RI Report (Inactive)
- Remedial Alternatives Screening (Inactive)
- Remedial Alternatives Evaluation (Inactive)
- FS Report (Inactive)
- Post-RI/FS Support (Inactive)
- Administrative Record (Inactive)
- Task Order Closeout.

As necessary, the inactive tasks identified above may be activated in the future through Task Order Modifications.

1.2.3 Project Sampling Approach

Available laboratory data have been generated from the site in several previous sampling events dating back to November 2015. The most recent data consist of shallow soil analytical results collected during the 2016 remedial action sampling events (Weston 2016); and soil, sediment and surface water data collected and presented in the TCEQ site inspection (TCEQ 2017). Data collected in November 2015 and presented in the TCEQ PA (TCEQ 2016) was not carried forward for further evaluation under the RI due to uncertainties associated with data validation, and because no coordinates were available for sample locations.

The current data is not complete enough or of sufficient quality to develop a firm conceptual understanding of the site, and a complete sampling program is necessary to complete the RI. The overall project goals will be achieved using an iterative, phased sampling approach. The goals of each phase and primary activities that will be performed during the phase will be included in a Sampling Design Matrix (Appendix A). As necessary, the Sampling Design Matrix may be amended with an addendum, to incorporate subsequent phases and sampling events for the RI.

This SAP presents the standard procedures for conducting each of the tasks anticipated to be needed to complete the RI. To meet the project objective, EA's tasks include the collection of samples. EA's field activities will be conducted in accordance with this SAP to ensure the proper management of samples, including accurate chain-of-custody (COC) procedures for sample tracking, protective sample-packing techniques, and proper sample-preservation techniques. The requirements of EA's site-specific HASP (EA 2018b) will be followed. Sample management activities will be conducted using the EPA-proprietary Scribe software. EA will document the characterization and disposal of investigation-derived waste (IDW) in accordance with local, state, and federal regulations, as appropriate.

1.3 DATA AND MEASUREMENT QUALITY OBJECTIVES

The following subsections present the DQOs and measurement quality objectives identified for this project.

1.3.1 Data Quality Objectives

DQOs are qualitative and quantitative statements developed through the seven-step DQO process (EPA 2006a). The DQOs clarify the study objective, define the most appropriate data to collect and the conditions under which to collect the data, and specify acceptance criteria that will be used to evaluate whether the quantity and quality of data collected are sufficient to support decision-making. The DQOs are used to develop a scientific and resource-effective design for data collection. The seven steps of the DQO process for this project are presented in Table 2.

Key to systematic planning is determining whether the problem to be solved requires a quantitative or qualitative answer (EPA 2006a). For this project, the data will be primarily quantitative and will be obtained through sample analysis using the EPA Region 6 Laboratory, a designated EPA Contract Laboratory Program (CLP) laboratory, or an EA subcontracted fixed

ED_004144A_00000101-00022

analytical laboratory. This includes samples collected from all media including ground water, surface water, soil, sediment, and IDW samples, and if necessary in the future biota and soil vapor. The analytical method reference sheets and EPA CLP Contract Required Quantitation Limits (CRQLs) for methods to be used are provided in Appendix B. Note that if passive soil gas (PSG), active soil gas (ASG), and/or biota samples are collected in the future, they will produce qualitative data through a private laboratory not affiliated with EPA's CLP.

Table 2. Data Quality Objectives

STEP 1: State the Problem
• Cyanide, lead, mercury, chromium and hexavalent chromium have been identified as COPCs impacting onsite soils, underlying ground water, surface water, and sediments downstream from the site.
STEP 2: Identify the Goals of the Study
• Confirm location of sources for contamination. • Expand analyte list to include organic compounds for a limited number of collected samples to ensure other COPCs do not exist for the site. • Determine the nature and extent of contamination in soil, ground water, surface water, and sediment, and if necessary in the future based on the Phase 1 finding, collect biota samples for laboratory analyses. If necessary, also conduct soil gas and indoor air investigations if VOCs are identified as COPCs. • Evaluate the ground water to surface water pathway to determine if ground water impacts surface water (e.g., complete or potentially complete pathway). • Characterize and delineate ground water discharge to surface water to determine if COPCs present unacceptable human health/ecological risk requiring evaluation of options and technologies to support future actions. • Determine whether COPCs present unacceptable human health/ecological risk requiring the evaluation of options and technologies to support future actions.
STEP 3: Identify Information Inputs
• During each phase, environmental, geologic, and hydrogeologic information (e.g., soil borings, soil samples, ground water samples, surface water samples, ground water and surface water elevations, etc.) will be collected; multi-media samples will be analyzed by laboratories to determine the nature and level of contamination present such that risks to human health and the environment can be assessed. • If VOCs are identified for the site, soil vapor sampling to include ASG, PSG, and/or indoor air data may be warranted during future RI phases to locate source areas and guide soil and indoor air sampling. PSG may also be used as a screening tool to delineate ground water contamination and guide placement of future monitoring wells. • As warranted, future RI phases may also include the collection of biota samples from nearby creeks based on the results of surface water and sediment data. • Aquifer parameters may be collected during future ground water pumping tests that can be used as input parameters to support contaminant fate and transport modeling and possibly ground water capture modeling.

STEP 4: Define the Boundaries of the Study
• The ground water plume and boundaries of other impacted media are not well established and appear to extend beyond the property boundary. • The vertical boundary is to be determined; depth to ground water in wells with known contamination is encountered at approximately 10 ft. bgs. The vertical boundary is currently assumed to be limited to the alluvial ground water unit beneath the site.
STEP 5: Develop the Analytic Approach
• If ground water is contaminated and confirmed to be above screening levels, collect sufficient data to determine nature and extent, and in the future perform a risk assessment to determine if the contamination poses an unacceptable risk. Select the most appropriate remedy for risk mitigation during the subsequent FS. • If VOCs are identified at the site, and future RI sampling phases confirms vapors are present in shallow soil as indicated by active soil gas mass in the samplers, or if vapors have impacted air quality inside of commercial properties and residences at a level that poses a human health risk, determine the source of the vapors and implement means of mitigating the intrusion in the future. During the FS, determine the most appropriate actions to be taken for risk mitigation. • If contamination in soil at a specific source area is confirmed to be above screening levels, collect sufficient data to determine nature and extent and in the future perform a risk assessment to determine if the contamination poses an unacceptable risk. If it does pose a risk or the possibility of a continuing release to ground water, determine the most appropriate actions to be taken for risk mitigation during the FS. • If contamination in surface water and sediment is above screening levels, collect sufficient data to determine nature and extent, make determination as to whether or not biota samples are required, and in the future perform a risk assessment to determine if the contamination poses an unacceptable risk. If they do pose a risk, determine the most appropriate actions to be taken for risk mitigation during the FS. • Some of these decision rules may not be satisfied until data collection is completed during the last RI phase.
STEP 6: Specify Performance or Acceptance Criteria
• Sample collection procedures, sample processing, and field sample analysis protocols are standardized and documented in SOPs to ensure that the methodology remains consistent and limits the potential for measurement error. • Field teams will be trained and perform specific tasks (e.g., sample collection or processing) throughout the field sampling effort to limit the potential for measurement error. • Potential for measurement error in the sample analysis will be limited by the analysis of QC samples (e.g., duplicates) and the implementation of strict analytical laboratory SOPs. • Data management procedures and sample tracking software (i.e., Scribe) will limit the potential for data reduction, transmission, and storage errors.

STEP 7: Develop the Plan for Obtaining Data
• Initially, low-flow ground water sampling will be used to sample existing on-site wells and monitoring wells installed during the Phase 1 RI field event. • Subsequent sampling will be conducted based on data collected during the Phase 1 sampling activities. • Field generated waste water and soil cuttings will be containerized, sampled and disposed appropriately. • Ground water samples will be collected from the existing on-site well and Phase 1 monitoring wells. Based on the results of sampling and historical sampling results, additional monitoring wells will be installed and ground water samples collected to complete horizontal and vertical ground water delineation. Ground water gauging will also be performed in conjunction with ground water sampling across the network at the site to support environmental fate and transport modeling, as required in the future. • If it is determined that VOCs are present during the Phase I sampling event, PSG, ASG, and/or indoor air samples may be collected to delineate soil gas impacts and determine if further vapor intrusion evaluation is needed. The samples will also help determine contaminant source locations and provide basis for soil boring locations, and new monitoring well locations. • Soil borings and soil samples will be collected during Phase 1 to delineate soil contamination and confirm source areas. If needed, additional soil samples may be collected during future RI phases in order to further determine the nature and extent of soil contamination. • Surface water and sediment samples will be collected to determine impact to drainage systems located south and east of the site. Based on the results of the surface water and sediment samples, biota samples may also be collected and analyzed during future RI phases. • Geotechnical/permeability soil samples and pump tests may be performed in the future to support environmental fate and transport modeling.
NOTES: ASG = Active soil gas. bgs = below ground surface. CLP = Contract Laboratory Program. PSG = Passive soil gas. QC = Quality control. RI = Remedial Investigation. SOP = Standard operating procedure.

1.3.2 Measurement Quality Objectives

Analytical results will be evaluated in accordance with PARCCS parameters to document the quality of the data and to ensure that the data are of sufficient quality to meet the project objectives. Of these PARCCS parameters, precision and accuracy will be evaluated quantitatively with analytical results from the QC samples listed in Table 3. The subsections below describe each of the PARCCS parameters and how they will be assessed in support of this project.

Table 3. Data Quality Indicators for Laboratory Data Obtained from Analysis of Investigation Samples

Indicator Parameter	Analytical Parameter	QC Sample	Acceptance Criteria for Laboratory Analysis
Accuracy (percent recovery)	VOCs, SVOCs, PCBs, TPH, PFCs,	LCS, LCSD MS, MSD Blanks[(a)]	70-130 percent recovery 50-150 percent recovery Less than CRQL
	Total Analyte List (TAL) Metals, Hexavalent Chromium, Cyanide	LCS, LCSD MS, MSD Blanks[(a)]	80-120 percent recovery 75-125 percent recovery Less than CRQL
Precision (RPD)	VOCs, SVOCs, PCBs, TPH, PFCs	LCS/LCSD MS, MSD Field duplicates	30 percent RPD (MS/MSD) 50 percent RPD (Field Duplicates)
	TAL Metals, Hexavalent Chromium, Cyanide	MS, MSD, MD, Field duplicates	20 percent RPD (aqueous) 35 percent RPD (solid) 50 percent RPD
Sensitivity (quantitation limits)	All analytical tests	MS, MSD Field duplicates	Not applicable
Completeness	The objective for data completeness is 90 percent.		
Representativeness	The sampling network analytical methods for this site are designed to provide data that are representative of site conditions.		
Comparability	The use of standard published sampling and analytical methods, and the use of quality control samples, will ensure data of known quality. These data can be compared to any other data of known quality.		

NOTES:
(a) May include method blanks, reagent blanks, instrument blanks, calibration blanks, trip blanks and field blanks.
CRQL = Contract required quantitation limit.
LCS = Laboratory control sample.
LCSD = Laboratory control sample duplicate.
MS = Matrix spike.
MSD = Matrix spike duplicate.
PCB = Polychlorinated biphenyl.
PFC = Perfluorinated chemical.
RCRA = Resource Conservation and Recovery Act.
RPD = Relative percent difference.
SVOC = Semi-volatile organic compound.
TPH = Total petroleum hydrocarbon.
VOC = Volatile organic compound.

1.3.2.1 Precision

Precision is the degree of mutual agreement between individual measurements of the same property under similar conditions. Combined field and laboratory precision is evaluated by

ED_004144A_00000101-00026

collecting and analyzing field duplicates and then calculating the variance between the samples, typically as a relative percent difference (RPD).

RPD is calculated as follows:

$$\text{RPD} = \frac{|A - B|}{(A + B)/2} \times 100\%$$

where

A = Parent concentration.
B = Duplicate concentration.

For every 10 samples collected, 1 field duplicate sample will be collected.

Laboratory analytical precision is evaluated by analyzing laboratory duplicates (also called matrix spike [MS] and matrix spike duplicates [MSD]). For this project, MS/MSD samples will be generated for all organic analytes. The results of the analysis for each MS/MSD pair will be used to calculate the RPD as a measure of laboratory precision for organic compounds.

1.3.2.2 Accuracy

A program of sample spiking will be conducted to evaluate laboratory accuracy. This program includes analysis of the MS and MSD samples, laboratory control sample (LCS) or blank spikes, surrogate standards, and method blanks. MS and MSD samples will be prepared and analyzed at a frequency of 5 percent. LCS or blank spikes are also analyzed at a frequency of 5 percent. Surrogate standards, where applicable, are added to every sample analyzed for organic constituents. The results of the spiked samples are used to calculate the percent recovery for evaluating accuracy relative to laboratory-specific measurement criteria.

$$\text{Percent Recovery} = \frac{S - C}{T} \times 100\%$$

where

S = Measured spike sample concentration
C = Sample concentration
T = True or actual concentration of the spike.

The objective for accuracy of field measurements is to achieve and maintain factory specifications for the field equipment. Field-portable analyzers will be calibrated using calibration standards at the start of each field day. Field instruments will be calibrated each day following manufacturer recommendations prior to daily use (see Section 2.8). If calibration reading deviate 20 percent or more from the concentration of the calibration standard, the unit will be recalibrated.

1.3.2.3 Representativeness

Representativeness expresses the degree to which sample data accurately and precisely represent the characteristics of a population, variations in a parameter at a sampling point, or an environmental condition that they are intended to represent. For this project, representative data will be obtained through careful selection of sampling locations, the selection of appropriate areas and depths for placing additional monitoring wells, and analytical parameters. Representative data will also be obtained through proper collection and handling of samples to avoid interference and minimize contamination.

Representativeness of data will also be ensured through the consistent application of established field and laboratory procedures. Trip and field blanks and laboratory blank samples will be evaluated for the presence of contaminants to aid in evaluating the representativeness of sample results. Data determined, by comparison with existing data, to be non-representative will be used only if accompanied by appropriate qualifiers and limits of uncertainty.

1.3.2.4 Completeness

Completeness is a measure of the percentage of project-specific data that are valid. Valid data are obtained when samples are collected and analyzed in accordance with QC procedures outlined in this SAP, and when none of the QC criteria that affect data usability are exceeded.

When all data validation is completed, the percent completeness value will be calculated by dividing the number of useable sample results by the total number of sample results planned for this investigation. The completeness goal is 90 percent.

Completeness will also be evaluated as part of the data quality assessment (DQA) process to be performed by EPA upon receipt of data (EPA 2006a, 2017a, 2017b). This evaluation will help determine whether any limitations are associated with the decisions to be made based on the data collected.

1.3.2.5 Comparability

Comparability expresses the confidence with which one data set can be compared with another. Comparability of data will be achieved by consistently following standard field and laboratory procedures and by using standard measurement units in reporting analytical data. Standard EPA analytical methods and QC will be used to support the comparability of analytical results with those obtained in other testing. Calibrations will be performed in accordance with EPA or manufacturer's specifications and will be checked with the frequency specified in the EPA analytical method.

1.3.2.6 Sensitivity (Detection and Quantitation Limits)

The method detection limit (MDL) is the minimum concentration of an analyte that can be reliably distinguished from background noise for a specific analytical method. The quantitation

limit represents the lowest concentration of an analyte that can be accurately and reproducibly quantified in a sample matrix.

CRQLs are contractually specified maximum quantitation limits for specific analytical methods and sample matrices, such as soil or water, and are typically several times the MDL to allow for matrix effects. CRQLs, which are established by EPA in the scope of work for subcontract laboratories (EPA 2016a, 2016b), are set to establish minimum criteria for laboratory performance; actual laboratory quantitation limits may be substantially lower.

For this project, CLP analytical methods or equivalent have been selected for ground water samples in an attempt to have CRQLs for each target analyte below the action levels, if possible. For this project, sample results will be reported as estimated values if concentrations are less than CRQLs but greater than MDLs. The MDL for each analyte will be listed as the detection limit in the laboratory's hardcopy data report and electronic data deliverable (EDD).

1.4 SPECIAL TRAINING REQUIREMENTS AND CERTIFICATION

This section outlines the training and certification required to complete the activities described in this SAP. The following sections describe the requirements for the EA team and subcontractor personnel working onsite.

1.4.1 Safety and Health Training

EA field team personnel who work at hazardous waste project sites are required to meet the OSHA training requirements defined in 29 CFR 1910.120(e). These requirements include: (1) 40 hours of formal offsite instruction, (2) a minimum of 3 days of actual onsite field experience under the supervision of a trained and experienced field supervisor, and (3) 8 hours of annual refresher training. Field personnel who directly supervise employees engaged in hazardous waste operations also receive at least 8 additional hours of specialized supervisor training. At least one member of the field team will maintain current certification in first aid and cardiopulmonary resuscitation.

Copies of the field team's safety and health training records, including course completion certifications for the initial and refresher safety and health training, specialized supervisor training, and first aid and cardiopulmonary resuscitation training, are maintained in project files.

Before work begins at a specific hazardous waste project site, EA personnel are required to undergo site-specific training that thoroughly covers the following areas:

- Names of personnel and alternates responsible for safety and health at a hazardous waste project site
- Health and safety hazards present onsite
- Selection of the appropriate personal protective equipment (PPE)

ED_004144A_00000101-00029

- Correct use of PPE
- Work practices to minimize risks from hazards
- Safe use of engineering controls and equipment onsite
- Medical surveillance requirements, including recognition of symptoms and signs that might indicate overexposure to hazardous substances.

For this project, Level D PPE will be used. For more safety and health details, see EA's site-specific HASP (EA 2018b).

1.4.2 Subcontractor Training

Subcontractors who work onsite will certify that their employees have been trained for work on hazardous waste project sites. Training will meet OSHA requirements defined in 29 CFR 1910.120(e). Before work begins at the project site, subcontractors will submit copies of the training certification for each employee to be working onsite to EA.

Employees of associate and professional services firms and technical services subcontractors will attend a daily safety briefing and complete the Safety Meeting Sign-Off Sheet before they conduct onsite work. This briefing is conducted by the EA Health and Safety Officer or other qualified person.

Subcontractors are responsible for conducting their own safety briefings. EA personnel may audit these briefings. Alternatively, the subcontractors may elect to attend the EA safety briefings.

1.5 DOCUMENTATION AND RECORDS

The following sections discuss the requirements for documenting field activities and preparing laboratory data packages. This section also describes reports that will be generated as a result of this project.

1.5.1 Field Documentation

Field personnel will use permanently bound field logbooks with sequentially numbered pages to record and document field activities and will follow SOP No. 059 (Appendix C). The logbook will list the contract name and number, site name, and names of subcontractors, service client, and EA Project Manager. At a minimum, the following information will be recorded in the field logbook:

- Name and affiliation of all onsite personnel or visitors
- Weather conditions during the field activity
- Summary of daily activities and significant events
- Notes of conversations with coordinating officials

- References to other field logbooks or forms that contain specific information
- Discussions of problems encountered and their resolution
- Discussions of deviations from the SAP or other governing documents
- Description of all photographs taken.

Corrections in the field logbook will consist of line-out deletions that are initialed and dated as per SOP No. 059 (Appendix C).

1.5.2 Laboratory Documentation

This section describes the data reporting requirements for the project laboratories (e.g., EPA CLP laboratories, EPA Regional laboratory, or EA subcontracted laboratories) that generate measurement data under the EPA Region 6 RAC II program.

EA will require fixed offsite non-CLP laboratories to prepare and submit data packages in accordance with the EPA CLP protocols (EPA 2016a, 2016b) for hard copy and EDD format of data. Data packages will include applicable documentation for independent validation of data and verification of the DQOs. The following documentation will be required for data validation, if applicable:

- Case narrative, which will describe QC non-conformances that are encountered during the analysis of samples in addition to any corrective actions that are taken:

  — Statement of samples received
  — Description of any deviations from the specified analytical method
  — Explanations of data qualifiers that are applied to the data
  — Any other significant problems that were encountered during analysis.

- Field and laboratory sample identification cross-reference

- COC forms, which pertain to each sample delivery group or sample batch

- Laboratory reports, which must show traceability to the sample analyzed and must contain specified information:

  — Project identification
  — Field sample number
  — Laboratory sample number
  — Sample matrix description
  — Dates and times of sample collection, laboratory receipt, preparation, and analysis
  — Description of analytical method and reference citation

  - Results of individual parameters, with concentration units, including second column results, second detector results, and other confirmatory results, where appropriate
  - Quantitation limits achieved
  - Dilution or concentration factors.

- Data summary forms and QC summary forms showing analytical results, if applicable:

  - Samples
  - Surrogates
  - Blanks
  - Field QC samples
  - LCS
  - Initial and continuing calibrations
  - Other QC samples.

- Laboratory control documentation:

  - Raw data
  - Instrument printouts
  - Laboratory bench sheets for preparation of samples.

- MDL study results.

EA's Project Chemist, in cooperation with the QA Officer, will define site-specific requirements for data reporting. Requests for analytical services define these requirements, the turnaround time for receipt of the data deliverables specified, and requirements for retaining samples and laboratory records. Laboratory QA Managers are responsible for ensuring that all laboratory data reporting requirements are in accordance with CLP protocol.

1.5.3 Level 4 Type Data Package

A level 4 type data package deliverable is required for the RI analytical laboratory data. The laboratory will prepare data packages in accordance with the instructions provided in the EPA CLP SOWs (EPA 2016a, 2016b). Data packages will contain the information from the summary data package and associated raw data. Data packages are due to EA within 45 days after the last samples in the sample delivery group is received by the laboratory. In the case where an EA-subcontracted laboratory is used, level 4 type data deliverables and EDDs are due to EA within 35 days after the last sample in the sample delivery group is received. Unless otherwise requested, the subcontractor will deliver the final data package and EDD via email or a secure data portal.

1.5.4 Reports Generated

Following completion of the RI field program and receipt of validated data, EA will prepare the following reports associated with the Phase 1 RI:

- Data Evaluation Summary Report, which will include reduced and tabulated data, as well as data usability and a data trend evaluation.

2. DATA GENERATION AND ACQUISITION

This section describes the requirements for the following:

- Sampling process design (Section 2.1)
- Mobilization (Section 2.2)
- Sampling methodology (Section 2.3)
- Sampling handling and custody (Section 2.4)
- Analytical methods requirements (Section 2.5)
- Quality control requirements (Section 2.6)
- Instrument and equipment testing, inspection, and maintenance requirements (Section 2.7)
- Instrument calibration and frequency (Section 2.8)
- Requirements for inspection and acceptance of supplies and consumables (Section 2.9)
- Data acquisition requirements (Section 2.10)
- Data management (Section 2.11).

2.1 SAMPLING PROCESS DESIGN

The objective of this RI is to obtain an adequate amount of data necessary to support the selection of an approach for site remediation and then to use this data to result in a well-supported FS and ROD. This includes refining the nature and extent of site contaminants using a phased RI approach. To complete this objective EA currently anticipates collecting ground water, soil, surface water, and sediment samples from existing and new locations onsite and offsite during the Phase 1 field event. Samples will be shipped to selected analytical laboratories for analysis as appropriate (CLP, Region 6 or EA-subcontracted). Additionally, IDW water and soils generated from sampling activities will be characterized and disposed appropriately.

As stated previously, the goals of each phase and primary activities that will be performed during Phase 1 will be included in a Sampling Design Matrix (Appendix A). The Sampling Design Matrix will be amended, as necessary, during subsequent phases of the RI field activities. Appendix D contains screening levels and reporting limits for the required analytical methods and parameters.

For the activities associated with this Task Order and SAP, main elements of the sampling design include the numbers and types of samples to be collected, sampling locations, sampling

ED_004144A_00000101-00033

frequencies, and sample matrices. The EA Work Plan (EA 2018a) has established the maximum number of samples that will be collected for each matrix. EA will amend the SAP to incorporate additional Sampling Design Matrixes prior to the start of subsequent phases of the investigation. The Sampling Design Matrix for each phase of the site investigation will be included in an addendum to this SAP.

The overall Phase 1 investigation will include the following elements:

Ground Water Sampling—EA will collect ground water samples from existing onsite water wells and newly installed ground water monitoring wells as part of the Phase 1 RI field activities. The ground water samples will be analyzed for the target analyte list (TAL) metals (total and dissolved), hexavalent chromium, and total dissolved solids (TDS). During the Phase 1 RI sampling activities, a subset of these samples (10 percent) will also be analyzed for the target compound list VOCs, semi-volatile organic compounds (SVOCs), cyanide, polychlorinated biphenyls (PCBs), perfluorinated chemicals (PFCs), and total petroleum hydrocarbons (TPH). Additional monitoring wells may be installed during future RI phases, and the analyte list may be adjusted based on the results obtained during the Phase 1 RI sampling event. Further information regarding the collection of ground water samples is provided under Section 2.3.1 of this SAP and in the Sampling Design Matrix (Appendix A).

Monitoring Well Installation—EA anticipates installing and developing additional ground water monitoring wells. These wells will have 2-inch diameter polyvinyl chloride (PVC) casing and will be drilled to a maximum depth of 40 ft. bgs. Hollow-stem auger (HSA) drilling methods will be used to install the wells. During Phase 1, three new monitoring wells are anticipated. Up to three soil samples will be collected from each boring, and samples will be analyzed for TAL metals and hexavalent chromium. During the Phase 1 sampling activities, a subset of these samples (10 percent) will also be analyzed for VOCs, SVOCs, cyanide, PCBs, PFCs, TPH, oxidation – reduction potential (ORP), and pH. A soil core will also be collected from each monitoring well borehole and will be analyzed for geotechnical parameters. Additional monitoring wells may be installed during subsequent phases of the RI, as needed. Further information regarding monitoring well installation is provided under Section 2.3.3 of this SAP and in the Sampling Design Matrix (Appendix A).

Soil Investigation—EA anticipates installing soil borings and collecting soil samples to better characterize suspected source areas, and to delineate nature and extent of impacted surface and subsurface soil. Up to three soil samples will be collected from each boring, and samples will be analyzed for TAL metals and hexavalent chromium. During the Phase 1 sampling activities, a subset of these samples (10 percent) will also be analyzed for VOC, SVOCs, cyanide, PCBs, PFCs, TPH, ORP, and pH. Additional soil borings may be installed during future RI phases, and the analyte list may be adjusted during on the results obtained during the Phase 1 RI sampling event. Further information regarding the soil investigation is provided under Section 2.3.2 of this SAP in and the Sampling Design Matrix (Appendix A).

Surface Water and Sediment Sampling— EA will collect sediment and surface water samples as part of the Phase 1 RI field activities. To the extent possible, surface water samples will be co-located with sediment sample locations. In the event surface water is not present at a sediment location, the surface water sample may be re-located to another area where only a surface water sample will be collected.

The sediment samples will be analyzed for TAL metals and hexavalent chromium. During the Phase 1 sampling activities, a subset of these samples (10 percent) will also be analyzed for VOCs, SVOCs, cyanide, PCBs, PFCs, TPH, ORP, pH, total organic carbon (TOC) and acid volatile sulfide/simultaneously extracted metals (AVS/SEM). Additional sediment samples may be collected during future RI phases the analyte list may be adjusted based on the results obtained during the Phase 1 RI sampling event.
The surface water samples will be analyzed for TAL metals (total and dissolved), and hexavalent chromium. During the Phase 1 sampling activities, a subset of these samples (10 percent) will also be analyzed for VOCs, SVOCs, cyanide, PCBs, PFCs, TPH, hardness, TDS, total suspended solids (TSS), alkalinity, and TOC. Additional surface water samples may be collected during future RI phases, and the analyte list may be adjusted, based on the results obtained during the Phase 1 RI sampling event.

The surface water and sediment samples collected under the Phase 1 RI field activities will be used primarily to identify complete exposure pathways to the adjacent drainage system, associated wetlands, and the closest stock pond situated east of the site. The results of the Phase 1 sampling event will be used to form the basis for subsequent sediment and surface water sample locations. Further information regarding the collection of surface water and sediment samples is provided under Section 2.3.4 of this SAP and in the Sampling Design Matrix (Appendix A).

IDW Characterization and Disposal—EA will characterize IDW at the end of the investigation activities. EA will then arrange for appropriate procurement and dispose of the IDW in accordance with local, state, and federal regulations. Further information regarding IDW characterization and disposal is provided under Section 2.3.9 of this SAP.

Future phases of the RI investigation may also include the following elements:

Biota Sampling—During the Phase 1 RI field activities, EA does not plan to collect biota samples in the form of fish tissue and/or similar aquatic organisms. However, if data collected during the Phase 1 RI suggests the need for biota samples, they will be collected during subsequent phases of the RI field activities. Further information regarding biota sampling is provided under Section 2.3.5 of this SAP.

Passive/Active Soil Gas Sampling—EA will not collect PSG/ASG samples as part of the Phase 1 RI field activities. However, as necessary based on the Phase 1 RI results, sampling and analyses of soil gas samples may occur during subsequent phases of the RI field activities. Further information regarding passive/active soil gas sampling is provided under Section 2.3.2.2 of this SAP.

Indoor Air Evaluation—During the Phase 1 RI field activities, EA does not plan to conduct indoor air evaluations for structures located at or near the site. If data collected during the Phase 1 RI field activities suggest the need for an indoor air evaluation, it will be conducted during subsequent phases of the RI field activities. Further information regarding indoor air evaluations is provided under Section 2.3.6 of this SAP.

Table 4 describes the required sample volume, containers, preservatives, and holding times for sample analyses that may be required during the current and/or future phases of the RI field activities.

Table 4. Analytical Parameters, Methods, Sample Volume and Holding Times

Parameter	Method	Volume and Container	Preservatives	Holding Time
AIR				
Volatile Organic Compounds (VOCs)	EPA TO-15 (LL for soil gas and SIM for indoor air)	1 x 6-liter evacuated summa canister	None	30 days
GROUND WATER AND/OR SURFACE WATER				
Alkalinity	Standard Methods (SM)2320B	1 x 250-milliliter HDPE bottle	Store at <6°C (4±2°C)	14 days
Cyanide	CLP ISM02.4/ EPA SW9012B	1 x 1-Liter HDPE bottle	NaOH to pH>12; Store at <6°C (4±2°C)	14 days
Hardness	EPA Method 130.2	1 x 100-milliliter HDPE bottle	HNO_3 to pH ≤ 2; Store at <6°C (4+2°C)	180 days
Hexavalent Chromium	EPA Method 218.6	1 x 125-mililiter HDPE bottle	NH_4OH (pH>9); Store at <6°C (4±2°C)	14 days
Metals (including mercury)	CLP ISM02.4/ EPA SW6010C/6020A/ 7470B	1 x 1-Liter HDPE bottle	HNO_3 to pH ≤ 2; Store at <6°C (4±2°C)	180 days (28 days for mercury)
Perfluorinated chemicals (PFCs)	EPA Method 537(M) Isotope	2 x 250 ml HDPE bottles	Store at <6°C (4±2°C)	14 days
Polychlorinated Biphenyls (PCBs)	CLP SOM02.4/ EPA SW8082	Two 1-liter amber glass bottles	Store at <6°C (4±2°C)	7 days
Semivolatile Organic Compounds (SVOCs)	CLP SOM02.4/ EPA SW8270D	2 x 1-Liter amber glass bottles	Store at <6°C (4±2°C)	7 days extraction, 40 days analysis
Total Dissolved Solids (TDS)	SM2540C/ EPA Method 160.1	1 x 1-liter HDPE bottle	Store at <6°C (4±2°C)	7 days
Total Suspended Solids (TSS)	SM2540D	1 x 1-liter HDPE bottle	Store at <6°C (4±2°C)	7 days
Total Organic Carbon (TOC)	SM 5310C	1 x 250-milliliter glass bottle	H_2SO_4 to pH <2; Store at <6°C (4±2°C)	28 days

ED_004144A_00000101-00036

Parameter	Method	Volume and Container	Preservatives	Holding Time
Total Petroleum Hydrocarbons (TPH)	TX1005	3 x 40-milliliter amber glass vials, 24-millimeter neck finish	HCl to pH ≤ 2; Store at <6°C (4±2°C)	14 days
VOCs (low-level)	CLP SOM02.4/ EPA SW8260C	3 x 40-milliliter amber glass vials, 24-millimeter neck finish	HCl to pH ≤ 2; Store at <6°C (4±2°C)	14 days
SOIL AND/OR SEDIMENT				
Acid volatile sulfide/ simultaneously extracted metals (AVS/SEM)	EPA 821/R-91-100/ EPA SW6010C/ SW9034	1 x 8-ounce amber glass jar (filled to capacity)	Store at <6°C (4±2°C)	14 days
Cyanide	CLP ISM02.4/ EPA SW9012B	1 x 8-ounce glass jar with Teflon™-lined cap	Store at <6°C (4±2°C)	14 days
Hexavalent Chromium	EPA SW3060/ 7199A	1 x 8-ounce glass jar with Teflon™-lined cap	Store at <6°C (4±2°C)	30 days
Metals (including mercury)	CLP ISM02.4/ EPA SW6010C/6020A/ 7471B	1 x 8-ounce glass jar with Teflon™-lined cap	Store at <6°C (4±2°C)	180 days (28 days for mercury)
Oxidation – Reduction Potential (ORP)	ASTM Method D1498	1 x 4-oz glass jar	Store <6 C (4±2°C)	14 days
PCBs	CLP SOM02.4/ EPA SW8082	1 x 8-ounce glass jar with Teflon™-lined cap	Store at <6°C (4±2°C)	365 days
PFCs	EPA Method 537(M)	1 x 8 ounce HDPE jar	Store at <6°C (4±2°C)	28 days
pH	EPA SW9045D	1 x 8-ounce glass jar with Teflon™-lined cap	Store at <6°C (4±2°C	Analyze upon receipt
SVOCs	CLP SOM02.4/ EPA SW8270D	1 x 8-ounce glass jar with Teflon™-lined cap	Store at <6°C (4±2°C)	14 days
TPH	TX1005	Terracore Sample Kit containing 1 x 2-oz soil jar	Store at <6°C (4±2°C)	14 days
TOC	EPA SW9060A	1 x 8-ounce amber glass jar with Teflon™- lined cap	Store at <6°C (4±2°C)	28 days
VOCs	CLP SOM02.4/ EPA SW5035/ 8260C	3 x 40 milliliter vials (methanol and water) collected using 5-gram coring tool (e.g., Terracore or EnCore) samplers and 1 x 4-ounce glass jar	Store at <6°C (4±2°C)	48 hours/ 14 days
INVESTIGATION-DERIVED WASTE SOIL AND WATER				
Reactivity (Cyanide and Sulfide)-Water	EPA SW-846 Chapter 7/ SW9012B/ SW9034	1-Liter HDPE bottle	NaOH to pH>12; Zinc acetate and NaOH to pH>12; Store at <6°C (4±2°C);	14 days/ 7 days
Corrosivity (pH)-Soil	EPA SW9045D	1 x 8-ounce glass jar with Teflon™-lined cap	Store at <6°C (4±2°C)	Analyze upon receipt

ED_004144A_00000101-00037

Parameter	Method	Volume and Container	Preservatives	Holding Time
Corrosivity (pH)-Water	EPA SW9045D	1 x 125-milliliter bottle	Store at <6°C (4±2°C)	Analyze upon receipt
Ignitability - Soil	EPA SW-846 Chapter 7	1 x 8-ounce glass jar with Teflon™-lined cap	Store at <6°C (4±2°C)	14 days
Ignitability - Water	EPA SW-846 Chapter 7/ EPA SW1010A	1 x 250-milliliter glass bottle	Store at <6°C (4±2°C)	14 days
TPH	TX Method 1005	One Terracore Sample Kit containing 1 x 2-oz soil jar (soil); 3 x 40-milliliter amber glass vials, 24-millimeter neck finish (water)	Store at <6°C (4±2°C) (solid); HCl to pH<2, Store at <6°C (4±2°C) (liquid)	14 days
TCLP Metals	EPA SW1311/6010C.7470 A	1 x 8-ounce glass jar with Teflon™-lined cap (solid); 1 x 1-Liter HDPE or glass container (liquid)	Store at <6°C (4±2°C) (solid); HNO3 to pH<2 Store at <6°C (4±2°C) (liquid)	180 days (28 days for Hg)
TCLP SVOCs	EPA SW1311/8270D	1 x 8-ounce glass jar with Teflon™-lined cap (solid); 1 x 1-Liter HDPE or glass container (liquid)	Store at <6°C (4±2°C)	14 days
TCLP VOCs	EPA SW1311/ 8260C	1 x 8-ounce glass jar with Teflon™-lined cap (solid); 1 x 1-Liter HDPE or glass container (liquid)	Store at <6°C (4±2°C) (solid); HCl to pH<2 Store at <6°C (4±2°C) (liquid)	14 days

NOTES:
Holding time is shown as the time from sample collection to the time of sample extraction/time from sample extraction to analysis (as appropriate).
°C = Degrees Celsius
CLP = Contract Laboratory Program
EPA = U.S. Environmental Protection Agency
HCl = Hydrochloric acid
HDPE = High-density polyethylene
Hg = Mercury
HNO3 = Nitric acid
H_2SO_4 = Sulfuric acid
LL = Low Level
NaOH = Sodium hydroxide
NH_4OH = Ammonium hydroxide
SIM = Selective Ion Monitoring
TCLP = Toxicity Characteristic Leaching Procedure

Table 5 is a list of the existing onsite wells and new monitoring wells (to be installed) that will be samples as part of the Phase 1 RI field activities. Figure A-1 (Appendix A) presents the existing onsite well and Phase 1 RI monitoring well locations. Some or all of these wells may be sampled in support of the RI as well as newly installed wells and existing wells that have not yet been sampled. The total number and location of wells to be sampled will be determined as more information is collected.

ED_004144A_00000101-00038

Table 5. Existing Wells and Phase 1 RI Monitoring Wells to be Installed

Wells
WW-1 – existing onsite well
WW-2 – existing onsite well
MW-1 – to be installed
MW-2 – to be installed
MW-3 – to be installed

2.2 MOBILIZATION

2.2.1 Mobilization

It is anticipated that each RI phase will include one mobilization with daily trips to/from the site. If needed, a second mobilization for a sampling team may be needed should newly installed monitor wells require additional time to recharge after development. Efforts will be made to coordinate and conduct multiple activities while teams are in the field.

Prior to mobilizing for a specific task, EA personnel will confirm that access has been granted for the required properties and subsurface clearance (utility locates) has been conducted in accordance with SOP 003 (Appendix C).

2.2.2 Site Access

Sampling activities will be performed on-site was well as privately-owned properties located within the City of Dallas. As necessary, EA will provide assistance to EPA to obtain consent for property access agreements from the private property owners that will be identified for investigation under the RI activities.

EA personnel will carry a copy of the signed access agreement with them in the field. EA will provide a 24-hour notice to property owners of the intent to access their property.

1.1.1 Underground Utilities Survey

An underground utilities survey will be conducted to clear all well and soil boring locations before any intrusive activities begin. The survey will include water distribution piping, telecommunications lines, storm sewer lines, sanitary sewer lines, industrial wastewater lines, gas lines, fire water lines, fuel product lines, and electrical lines.

1.1.2 Surveying

Newly installed wells and soil, sediment, and surface water sample locations will be surveyed after installation. At a minimum, easting, northing, ground surface elevation, and top of well casing elevations will be measured and reported. Horizontal coordinates of the monitoring well locations will be surveyed in-house to the nearest 0.1 ft. relative to State plane coordinates using

Real Time Kinematic Global Positioning System survey methods. Elevations will be measured relative to mean sea level at ground surface to the nearest 0.1 ft.

2.3 SAMPLING METHODOLOGY

This section describes the procedures for sample collection, including sampling methods and equipment, sample preservation requirements, decontamination procedures, and management of IDW. Table 6 lists the SOPs that may be used for Phase 1 and future phases of the RI field activities. SOPs are provided in Appendix C.

Table 6. Standard Operating Procedures

SOP No.	SOP Title
001	Sample Labels
002	Chain-of-custody Form
003	Subsurface/Utility Clearance
004	Sample Packing and Shipping
005	Field Decontamination
006	Summa Canister Sampling
007	Surface Water Sampling
008	pH Measurement
009	Temperature Measurement
010	Water Level Well Depth Measurements
011	Photoionization Detector
012	Specific Conductance Measurements
013	Monitoring Well Sample Collection
014	Collection of Production Well Samples
015	Document Control System
016	Surface Water, Ground Water, and Soil/Sediment Logbooks
019	Monitoring Well Installation
020	Active Soil Gas Sampling
021	Sediment Sampling
022	Sediment, Benthic Sampling, and Macroinvertibrate Sampling with Eckman Grad
023	Organic Vapor Analyzer
024	Photoionization Detector
025	Soil Sampling
026	Active Soil Gas Analysis
027A	Passive Soil Gas Survey – Gore Sorbers
027B	Passive Soil Gas Surveys - Petrex Technique
028	Well and Boring Abandonment
032	Piezometer Installation

ED_004144A_00000101-00040

SOP No.	SOP Title
033	Aquifer (Hydraulic) Testing
034	Drum Sampling
036	Turbidity Measurements
037	Dissolved Oxygen Measurements
038	Redox Potential Measurements
039	Sample Preservation and Container Requirements
042	Disposal of Investigation-Derived Material
043	Multi-Probe Water Quality Monitoring Instruments
046	Aqueous Diffusion Samplers
047	Direct-Push Technology Sampling
048	Low Flow Sampling
051	Low Flow Purge and Sampling Using Dedicated Pumps
054	Fish Tissue Analysis
059	Field Logbook
063	Chemical Data Management
064	Sediment Boring Logs

NOTE:
SOP = Standard operating procedure.

2.3.1 Ground Water Sampling

EA will be collecting ground water samples from the two existing onsite water wells and three new monitoring wells installed as part of the Phase 1 RI field activities. Table 5 provides a list of the current onsite wells and monitoring wells to be installed as part of the Phase 1 RI field activities. Other monitor and water wells may be installed and/or added for sampling in future RI phases based on the data collected. As indicated in the Sampling Design Matrix (Figure A-2 and Table A-1, Appendix A), the collected ground water samples will be analyzed for TAL metals (total and dissolved), hexavalent chromium, and TDS. During the Phase RI 1 sampling activities, a subset of these samples (10 percent) will also be analyzed for VOCs, SVOCs, cyanide, PCBs, PFCs, and TPH. The wells will be sampled using low-flow sampling methods (SOP 048, Appendix C).

Additional monitoring wells may be installed in the future, and the analyte list may be adjusted during subsequent RI phases, based on the results obtained during the Phase 1 RI sampling event. Table 4 identifies the analytical methods and associated information such as sample containers, preservatives, and hold times for each method. If submitted to a private laboratory, an equivalent laboratory method will be used by that laboratory. The number of QC samples to be collected will be in accordance with the requirements set forth in this SAP and are summarized in Table 7.

Table 7. Frequency of Field Quality Control Samples

Field Quality Control Sample	Frequency[a]
Trip Blank	1 per cooler containing aqueous samples for volatile organic compound analysis
Field Blank	1 per day, if site conditions render this sample necessary (high winds, volatiles are detected using a photoionization detector, etc.)
Field Duplicate	1 per 10 samples
Equipment Rinsate Blank	1 per non-dedicated equipment type per day or 1 per 20 samples
Matrix Spike/Matrix Spike Duplicate[b] (Organics)	1 per 20 samples (or per U.S. Environmental Protection Agency Region 6 Laboratory requirements)
Temperature Blank	1 per cooler

NOTES
a. The quality control sample collection frequency applies to samples collected for fixed-laboratory analysis (EPA 2017a, 2017b).
b. Matrix spike and matrix spike duplicate analyses are technically not field quality control samples; however, they require that the field personnel collect additional volumes of samples and are, therefore, included on this table for easy reference. The analytical laboratory will be contacted to determine sample volume requirements. Matrix spike samples will not be collected for alkalinity, hardness, TDS, TSS or TOC analyses.

2.3.1.1 Water Supply Well Sampling

The two onsite water wells will be sampled as part of the Phase 1 RI field activities. Due to the wells being unused and depth to ground water being relatively shallow, these wells will be sampled using the same sampling techniques for monitoring well sampling described below in Section 2.3.1.2.

If it is determined that other private and/or public water supply wells need to be sampled during future phases of the RI field activities, these wells will be purged and geochemical parameters monitored and logged using a calibrated water quality meter in accordance with SOP 014 (Appendix C). The parameters collected will include pH, temperature, and conductivity (SOPs 008, 009, and 012). These parameters will be measured for 15 minutes prior to sampling or until the readings have stabilized (conductivity within 10 percent, pH within plus or minus 0.5 pH unit, and temperature within plus or minus 1°C). Measurement of field parameters is further described in SOPs 008, 009, 012, 036, 037, 038, and 048 (Appendix C). The samples will be collected from the tap located closest to the well head and prior to a connection to a water treatment/filtration system. Field parameters will be recorded on field forms provided in Appendix E.

2.3.1.2 Monitoring Well Sampling

EA will purge and collect ground water samples from monitoring wells using low-flow (i.e., micropurge using a submersible or peristaltic pump) sampling methodology (SOP 048, Appendix C). Low-flow sampling requires that minimal drawdown is maintained throughout purging of the well to ensure that the water being purged is in fact entering the pump from the formation, and not as a result of lowering water levels within the well. Water level measurements will be collected periodically to confirm that drawdown is not occurring in

ED_004144A_00000101-00042

accordance with SOP No. 010 (Appendix C). Geochemical parameters will be monitored and logged using a calibrated water quality meter. Ground water will continue to be purged until measurements of temperature and conductivity have stabilized to within 10 percent, and pH has stabilized to within 0.1 pH unit. Other parameters will be monitored and recorded during purging, including turbidity and oxidation-reduction potential, but will not be used as stabilizing criteria. Measurement of field parameters is further described in SOP Nos. 008, 009, 012, 036, 037, 038, and 048 (Appendix C). Field parameters will be recorded on field forms provided in Appendix E.

2.3.2 Soil Investigation

2.3.2.1 Soil Borings

Soil borings will be installed and soil samples collected using either direct-push technology (DPT) (SOP 047, Appendix C), HSA drilling and sampling methods, or by use of hand augers. DPT and HSA drilling will be performed by licensed drillers. During the Phase 1 RI field activities, the soil borings will be installed and sampled to a total depth of 15 ft. bgs, or to refusal, whatever is encountered first; this depth may be adjusted during future phases of the RI field activities, based on the results obtained during Phase 1 of the RI.

During drilling, continuous soil cores will be collected. If using DPT, the soil core will be collected using clear PVC or acetate sleeves; two cores located adjacent to each other may be required at each soil boring location in order to obtain a sufficient volume of soil for laboratory analyses. If soil borings are advanced using HSA, the borings will be sampled continuously using split spoon sampler or a five-foot core barrel that is decontaminated between uses. In the event an area is not accessible for a DPT or HSA rig, a hand auger may also be used to collect shallow soil samples. A field geologist will log the material types within each core to assist in the understanding of site geology and for the nature and extent of contamination. Soil borings will be logged on standard boring log forms (Appendix E) using the Unified Soil Classification System methodology. During logging the field team will also field screen the samples using a photoionization detector (SOP 024, Appendix C) or organic vapor analyzed (SOP 23, Appendix C), will also make olfactory and visual observations of the collected soil cores, and record this data on the boring log form.

Soil samples will be collected for laboratory analyses following SOP 25 (Appendix C). These samples will be utilized for the characterization of the subsurface, delineation of the contamination, and the potential for contribution to ground water contamination (there is evidence of migration to ground water due to ground water contamination associated with the two onsite water wells).

Appendix A contains the Sampling Design Matrix for soil samples. Figure A-1 illustrates the soil sample locations for the monitoring well boreholes, Figure A-2 illustrates the soil boring sample locations, and Table A-2 summarizes the soil samples to be collected from each location. As indicated on this stable, the following intervals of surface and subsurface soil will sampled from the soil borings and retained for laboratory analyses:

ED_004144A_00000101-00043

- 0.0 ft. to 0.5 ft.
- 0.5 ft. to 2.0 ft.
- Total Depth or refusal (the interval that is representative of 15 ft. bgs, or refusal, whichever is encountered first)

The Sampling Design Matrix (Table A-2, Appendix A) also specifies what metals and organic compounds the collected soil samples will be analyzed for. Figures A-1 and A-2 (Appendix A) illustrate soil sample locations for soil borings and monitoring wells. During the Phase 1 RI field activities, the collected soil samples will be analyzed for TAL metals and hexavalent chromium. A subset of these samples (10 percent) will also be analyzed for VOCs, SVOCs, cyanide, PCBs, PFCs, TPH, ORP, and pH. Additional soil borings may be installed, and the analyte list may be adjusted during subsequent RI phases, based on the results obtained during the Phase 1 RI sampling event. Table 4 identifies the analytical methods and associated information such as sample containers, preservatives, and hold times for each method. If submitted to a private laboratory, an equivalent laboratory method will be used by that laboratory. The number of QC samples to be collected will be in accordance with the requirements set forth in this SAP, and are summarized in Table 7.

Following completion of sampling activities, soil borings will be abandoned in accordance with SOP 028 (Appendix C).

2.3.2.2 Passive/Active Soil Gas Investigations

Passive and/or active soil gas investigations are not currently planned for the Phase 1 RI field activities. However, a section for these types of investigations has been included in the SAP in the event collected data indicates the need to perform them during future phases of the RI field activities. If required in the future, ASG sampling probes will be installed and ASG sampling will be conducted in accordance with the soil gas point installation and sampling procedures in Appendix F. Field parameters will be recorded on field forms provided in Appendix E.

In the event it is determined a PSG investigation is warranted, PSG samplers will be installed either on straight line transects or in a grid pattern, with sample locations of 25 to 50 ft. spacing, depending on the length of the transects/grid areas, and the location of site features. The PSG samplers will be deployed in small diameter soil borings at depths ranging between 12 and 36 in. bgs. Borings will be advanced in the subsurface with an electric hammer drill equipped with a 1.25 – 1.5 in. diameter bit to 12-14 in. bgs and then proceed with 0.5 to 1 in. bit to 36 in. bgs or refusal. After the boring is advanced to the desired depth, a hollow metal tube may be inserted into the boring to mitigate cave-in and facilitate sampler removal, then the PSG sampler will be lowered into the boring on a retrieval wire. A pin flag, grade stake, or similar marker will also be placed at each location (if possible), the boring sealed with aluminum foil, and the boring location covered. As necessary an amendment to this SAP will be prepared under separate cover if it is determined that a passive or active soil investigation is warranted.

2.3.3 Monitoring Well Installation

EA will supervise subcontractor installation, development, and surface completion of monitoring wells at the site. The locations of the wells will be selected based on site reconnaissance and existing site data. The well boreholes will be drilled (SOP 019) and soil samples collected (SOP 25) using HSA drilling methods for shallow monitoring wells.

During logging the field team will also screen the soil samples using a photoionization detector (SOP 024, Appendix C) or organic vapor monitor (SOP 23, Appendix C), make olfactory and visual observations, and record this data on the boring log form. The soil samples retained for laboratory analyses will be utilized for the characterization of the subsurface, further delineation of contamination, and the potential for contribution to ground water contamination. Appendix A contains the Sampling Design Matrix for soil samples (Table A-2); it also includes Figure A-1, which illustrates the monitoring well locations. As indicated on the Sampling Design Matrix for Phase 1 RI soil samples, the following intervals of surface and subsurface soil will sampled and retained for laboratory analyses:

- 0.0 ft. to 0.5 ft.
- 0.5 ft. to 2.0 ft.
- Highest Photoionization Detector reading/apparent ground water interface

The Sampling Design Matrix for soil (Table A-2, Appendix A) also specifies what metals and organic compounds the collected soil samples will be analyzed for. During the Phase 1 RI field activities, the collected soil samples will be analyzed for TAL metals and hexavalent chromium. A subset of these samples (10 percent) will also be analyzed for VOCs, SVOCs, cyanide, PCBs, PFCs, TPH, ORP, and pH. An undisturbed soil core will also be collected from the interval representing the apparent highest photoionization detector reading/apparent ground water interface for each monitoring well location, and this core will be analyzed for geotechnical parameters (bulk density, porosity, effective porosity, fraction organic carbon, and permeability).

Additional monitoring wells may be installed, and the analyte list for soil samples collected from them may be adjusted during subsequent RI phases, based on the results obtained during the Phase 1 RI sampling event. Table 4 identifies the analytical methods and associated information such as sample containers, preservatives, and hold times for each method. If submitted to a private laboratory, an equivalent laboratory method will be used by that laboratory. The number of QC samples to be collected will be in accordance with the requirements set forth in this SAP and are summarized in Table 7.

Phase 1 of the RI will include installation and sampling of three monitoring wells. The anticipated monitoring well design is installation of the monitoring wells to a maximum depth of 40 ft. bgs within the shallow alluvial aquifer beneath the site. However, the actual depth of the wells may be adjusted based on the depth the apparent ground water interface is encountered. Upon encountering the apparent ground water interface, the well borehole will be advanced 10 feet below this zone, and the well will be completed in such a way that it is screened across the ground water interface. This will prevent possible vertical migration of COPCs to deeper

ED_004144A_00000101-00045

units and allow seasonal for fluctuations of ground water within the screened interval of the monitoring wells. Based on the soil and ground water results obtained from these monitoring wells, the monitoring well network may be expanded during future phases of the RI field activities, in order to determine the nature and extent of ground water impact, and to determine whether or not the shallow ground water is discharging to the surface drainage systems located south and east of the site.

2.3.3.1 Monitoring Well Borehole Advancement

Underground utilities clearance will be performed and necessary permits will be obtained prior to borehole drilling commencement. Before initiating drilling, the down-hole equipment, rig, and other equipment (as necessary) will be steam-cleaned or high-pressure washed, followed by a pressurized rinse with potable water to minimize the potential for cross contamination. Special attention should be given to the threaded section of the casings and to the drill rods. Cleaned equipment will not be handled with soiled gloves. Drilling equipment will be steam-cleaned or high-pressure washed at the completion of the project to ensure that no contamination is transported offsite. Decontamination of the equipment will follow general practices listed in SOP Nos. 005 and 019 (Appendix C). Water derived from decontamination will be collected and temporarily stored at the staging area for characterization.

All soil borings drilled will be continuously monitored. Lithologic logs will be prepared by examining the drill cuttings. Soil classifications will follow American Society for Testing and Materials International D2488-90 as provided in SOP No. 019.

Once the borehole is advanced to close proximity of the anticipated top of the water table (reportedly at approximately 10 ft. bgs), the site geologist will direct the driller to slow the rate of advancement, and the retrieved soil cores will be used to identify the apparent ground water interface. Boreholes will be advanced to target depths relative to the water table and wells constructed so that they are screened across the apparent ground water interface, and do not create a potential conduit to underlying units. Sampling, field screening, and logging shall continue to total depth of each borehole.

2.3.3.2 Monitoring Well Construction

Conventional monitoring well construction will be performed by a Texas-licensed well driller. Administrative requirements will be completed by the driller in accordance with rules and regulations as described in Texas Administrative Code (TAC) Title 16, Part 4, Chapter 76 (Water Well Drillers and Water Well Pump Installers Rules); TAC Title 30, Part 1, Chapter 330, Subchapter J (Groundwater Monitoring and Corrective Action); as well as rules and regulations prescribed by local authorities.

The monitoring wells will be installed using HSA drilling methods for shallow wells. Well construction methods are described in SOP No. 019 (Appendix C). After the estimated top of the saturated zone is identified by the Site Geologist, the well bore will be deepened to a depth of 10 ft. below this interval. The borehole will be advanced to a maximum total depth of 40 ft. bgs

ED_004144A_00000101-00046

if the ground water interface is not apparent and suggests confining conditions within the shallow subsurface beneath the site. Boring/well construction logs will be recorded on field forms provided in Appendix E. The monitoring wells will be constructed using 2 in. PVC well casing and screen. It is currently anticipated that the well design will include 12 to 15 ft. of well screen, with the remainder of each monitoring well being constructed with riser. Lengths of well screen and riser may be adjusted, based on field conditions encountered.

2.3.3.3 Surface Completions

Depending on their location newly-installed monitoring wells will be constructed with either flush-mount or stickup surface completions. The flush-mounted surface completions will consist of 8 in. to 12-in.-diameter traffic-rated vaults set in 4-ft. by 4-ft. by 6-in.-thick concrete pads consisting of 4,000 pounds per square in. (psi)-rated concrete mix (Sackrete No. 10360 or equivalent, mixed to manufacturer's specifications) with a mat of No. 3 rebar on 12-in. centers. Concrete pads will slope away from the vault cover such that the vault cover elevation is 0.5 in. higher than the edges of the pad to allow for drainage of precipitation. A water-tight locking cap will be installed on each monitoring well.

For the stickup surface completions, a minimum 5 ft. protective casing (well monument) of either corrosion resistant material or painted with weather resistant paint shall be placed around the well. Approximately 2 ft. of protective casing will extend below grade, with 3 ft. extending above grade. The protective casing will have a locking cap and be designed to prevent the entrance of unauthorized personnel, rain, dust, or insects from entry, and threaded hole and drain plug at the base of the exposed portion of the casing, immediately above the top of the grout column. A concrete surface slab will surround the protective well casing and shall consist of 4,000 psi-rated concrete mix (Sackrete No. 10360 or equivalent, mixed to manufacturer's specification). The concrete pad will extend at least 2 ft. from the well in all directions, be a minimum of 6 in. thick with #3 rebar placed on 8 in. centers, and be sloped to drain away from the well. Protective posts, constructed of 6 in. diameter steel, shall be placed at all corners of the surface slab. Protective posts will be placed in 12 in. diameter boreholes, extend into the ground a minimum of 2 ft., and extend above grade a minimum of 3 ft. Posts will be placed in a 2 ft. concrete foundation and filled with concrete. The posts will be of sufficient strength to prevent vehicular damage to the well. Posts and protective casing will be yellow in color. Well heads will be capped with a locking vented cap.

2.3.3.4 Well Development

Monitoring wells will be developed following the completion of each well. The wells will be allowed to set 48 hours prior to initiating development. Downhole equipment, including surge blocks and/or pumps, will be decontaminated before first use at the site as well as in between wells. Water derived from decontamination will be collected and temporarily stored at the staging area for characterization.

Monitoring wells will be developed by surging and bailing, followed by pumping in accordance with SOP No. 019 (Appendix C). This process will continue until the wells yield relatively

sediment-free ground water and field parameters have stabilized. Well development records will be documented on field forms provided in Appendix E.

2.3.4 Surface Water and Sediment Sampling

Surface water and sediment sampling activities will occur during the Phase 1 RI field activities. To the extent possible, surface water samples will be co-located with sediment sample locations. In the event surface water is not present at a sediment location, the surface water sample may be re-located to another area where only a surface water sample will be collected. The surface water and sediment samples collected under the Phase 1 RI field activities will be used primarily to identify complete exposure pathways to the adjacent drainage system, associated wetlands, and the closest stock pond situated east of the site. The results of the Phase 1 sampling event will be used to form the basis for subsequent sediment and surface water sample locations.

Appendix A contains the Sampling Design Matrix for sediment samples; it also includes Figure A-3, which illustrates the sediment sample locations. As indicated on the Sampling Design Matrix for Phase 1 sediment samples (Table A-3), the collected sediment samples will be analyzed for TAL metals and hexavalent chromium. During the Phase 1 sampling activities, a subset of these samples (10 percent) will also be analyzed for VOCs, SVOCs, cyanide, PCBs, PFCs, TPH, ORP, pH, TOC, and AVS/SEM. Additional sediment samples may be collected, and the analyte list may be adjusted during subsequent RI phases, based on the results obtained during the Phase 1 RI sampling event.

Appendix A contains the Sampling Design Matrix for surface water samples (Table A-4); it also includes Figure A-4, which illustrates the surface water sample locations. As indicated on the Sampling Design Matrix for Phase 1 surface water, the surface water samples will be analyzed for TAL metals (total and dissolved), and hexavalent chromium. During the Phase I sampling activities, a subset of these samples (10 percent) will also be analyzed for VOCs, SVOCs, cyanide, PCBs, PFCs, TPH, hardness, TDS, TSS, alkalinity, and TOC. Additional surface water samples may be collected, and the analyte list may be adjusted during subsequent RI phases, based on the results obtained during the Phase 1 RI sampling event.

2.3.4.1 Surface Water Sampling Methodology

Surface water samples will be collected directly into the sample containers in accordance with EA SOP 007 (Appendix C). An alternative sampling method involves pumping water from the sample location through dedicated Teflon™-lined polyethylene tubing using a peristaltic pump; the intake of the sample tubing will be placed 6 in. below the surface of the water. Surface water samples collected for dissolved metals will be field-filtered using 0.45-micron disposable filters. Field parameters collected during surface water sample collection may include surface water flow rate, water temperature, pH, conductivity, TDS, ORP, and turbidity. Field forms are included in Appendix E. Coordinates for the sample locations will be obtained after sampling using a handheld global positioning system device. Sample locations may be adjusted based on existing field conditions.

ED_004144A_00000101-00048

2.3.4.2 Sediment Sampling Methodology

Sediment samples will be collected using sediment core samplers or laboratory-grade disposable scoops, in accordance with SOP 021 (Appendix C). AVS-SEM sediment sample containers will be completely filled to minimize head space. Field forms are included in Appendix E. Coordinates for the sample locations will be obtained after sampling using a handheld global positioning system device. Sample locations may be adjusted based on existing field conditions.

2.3.4.3 Surface Water and Sediment Sampling Program

Surface water and sediment samples will be collected from locations of suspected overland flow and potential points of entry into the surface drainage systems located immediately south and east of the site, and the pond located east of the site. If contaminant concentrations are below respective surface water and/or sediment screening criteria at a potential point of entry of discharge, then the investigation at that location will be considered complete as the nature and extent of contamination will be defined. However, if contaminants exceed screening criteria at a potential point of entry then the extent of contamination will not be defined, and the surface water and/or sediment sampling program will be expanded during future RI phases to investigate the nature and extent in the affected portions of the drainage systems.

Samples will be collected from each location using the following methodology and in accordance with the U.S. Geological Survey's (USGS) *National Field Manual for the Collection of Water-Quality Data* (USGS 2014):

1. Collocated surface water/sediment pairs will be collected from each location, unless otherwise specified above.

2. All sediment samples will be collected from 0.0–0.5 ft bgs.

3. All surface water samples will be collected from 0.0–0.5 ft or shallower below the water surface; due to the flow in the creek and tributaries, the mixing of the water column deems this sampling depth representative.

4. All surface water and sediment samples will be collected from each location at the same time while moving upstream from the confluences. This manner of sampling will ensure that the water and sediment at the upstream sampling locations are not disturbed due to ongoing sample collection occurring downstream.

5. Locations of the drainages from former potential sources of contamination will be verified. Surface soil and sediment samples will be collected from the points of confluence of the streams with these drainage pathways.

It is anticipated that, depending on the time of year, some surface drainage features may not contain surface water. If completely dry, only the sediment samples will be collected as per the strategy outlined above. If the bodies of water are dry, the sediment samples collected will also

be evaluated for exposure as the surface soil exposure medium. If there is water ponding in the intermittent streams, collocated ponded water and sediment will be collected from available locations, but at a frequency of not more than 1 sample every 200 ft.

In order to be able to assess the appropriate exposure routes and receptors for each surface water body, sampling personnel will make a sufficiently detailed description of the vegetation surrounding the site and will note if there are any animals present or any traces of animal life. Based on these observations and information collected from the residents on how the surface water bodies are used (fishing, swimming, etc.), risk screening (and if screening criteria are exceeded, risk assessment) of a threat to the appropriate human and ecological receptors will be evaluated. The results for surface water and sediment samples will be also used to determine where biota samples will be collected during a subsequent mobilization (most likely, from the most contaminated locations).

If the wetlands survey indicates wetlands are present within the area of influence of the site, then additional surface water and sediment samples will be collected during a future phase of the RI field activities. Also, if the extent of contamination is not defined downstream, a plan for collecting additional samples will be developed and implemented during a subsequent phase of the RI field activities.

2.3.5 Biota

Although not currently planned or scoped for the site, but if determined necessary based on the collected Phase 1 RI data, collection and laboratory analyses of biota samples may be necessary. This investigation could include fish tissue samples collected from the site for total metals analysis, and/or benthic invertebrate tissue samples following bioaccumulation testing from sediment collected from the site (including 1 control sample). Fish tissue sample results will be used directly in the food-web calculations for piscivorous mammals and birds. Invertebrate tissue results will be used to derive site-specific bioaccumulation factors for the benthic invertebrate food-web calculations. If necessary, fish samples will be collected and prepared using EA SOP 054 (Appendix C). As necessary an amendment to this SAP will be prepared under separate cover if it is determined that biota sampling and analysis is warranted.

2.3.6 Vapor Intrusion Investigation

Although not currently planned or scoped for the site, but if determined necessary based on the collected Phase 1 RI data, a potential vapor intrusion pathway investigation may be necessary. This will be completed by conducting sub-slab soil gas and indoor air sampling in onsite and/or nearby structures in the vicinity of the site. Sub-slab soil gas and indoor air samples will be collected in accordance with the vapor intrusion sampling procedures in Appendix F. Sub-slab soil gas samples will be used to evaluate the potential concentration of vadose zone source material and to evaluate the attenuation of vapors from source material into indoor air. Indoor air samples will also be used to evaluate the attenuation of vapors from source material to indoor air as well as provide an exposure point concentration for the building occupants. As necessary

ED_004144A_00000101-00050

an amendment to this SAP will be prepared under separate cover if it is determined that a vapor intrusion investigation is warranted.

2.3.7 Sample Container, Volume, Preservation, and Holding Time Requirements

The required sample volume, container type, preservation technique, and holding time for each analysis to be conducted for samples are presented in Table 4. Required containers, preservation techniques, and holding times for field QC samples, are the same as for field samples.

2.3.8 Decontamination

Decontamination of the equipment will follow general practices listed in SOP No. 005 (Appendix C). Cleaned equipment will not be handled with soiled gloves. All water derived from decontamination will be collected and temporarily stored at the staging area established by EA for characterization.

2.3.9 Investigation-Derived Waste

Appendix A contains the Sampling Design Matrix for IDW samples. EA will incorporate best management practices for green remediation as it relates to the management of IDW. IDW will be characterized and managed in accordance with local, state, and federal laws, as applicable.

Soil will be drummed, sealed, labeled, and stored at the designated staging area until profiled for acceptance at an approved disposal facility (SOP No. 042, Appendix C). IDW soil samples will be submitted to an EA-subcontracted laboratory for disposal characterization. Landfill Disposal Restrictions will dictate sample quantities and analysis.

Water generated during well installation, ground water sampling, aquifer testing, and equipment decontamination will be drummed, sealed, labeled, and stored at the designated staging area until profiled for acceptance at an approved disposal facility (SOP No. 042, Appendix C). IDW water samples will be submitted to an EA-subcontracted laboratory for disposal characterization.

All IDW will be handled and disposed of in accordance with applicable regulations and requirements.

2.3.10 Sample Designation

Each sampling location will be designated with a unique alphanumeric designation according to the following sample classifications:

- ***Soil Samples*** – Soil sample designation will include three fields separated by dashes. For example: SO1-0.5-2.0. The first field, "SO1" identifies the sample type and number. The alpha characters are the designation for type of sample: Soil ("SO"). Soil samples collected from monitor well borings will keep the alpha characters associated with the well ("MW" for permanent monitoring wells). The first numerical character represents

ED_004144A_00000101-00051

"0.5" represents the top of the sample interval measured in ft. bgs and the third field, "2.0" represents the bottom of the sample interval measured in ft. bgs.

- ***Ground Water Samples*** – Ground water samples will first be identified based on the type of well. Samples collected from monitor wells will have a designation of "MW" and samples collected from water wells will have a designation of "WW".

  — Monitor well ground water sample designations will include two fields separated by a dash. For example: MW-03. The two alpha characters in the first field, "MW" identify the sample as having been collected from a monitoring well. The second field, "03," represents the numerical designation for the monitor well number.

  — Water well ground water sample designations will include two fields separated by a dash. For example: WW-01. The two alpha characters in the first field, "WW" identify the sample as having been collected from a water well. The second field, "01," represents the numerical designation for a generic water well number assigned to each well sampled.

- ***Surface Water Samples*** – The surface water sample designation will include two fields separated by a dash. For example: LSW-01. The three alpha characters in the first field, "LSW" identify the sample as a Lane surface water (LSW) sample. The second field, "01" represents the numerical designation of the surface water sample.

- ***Sediment Samples*** – The surface water sample designation will include two fields separated by a dash. For example: LSE-01. The three alpha characters in the first field, "LSE" identify the sample as a Lane sediment (LSE) sample. The second field, "01" represents the numerical designation of the surface water sample.

- ***Biota Samples*** – If biota samples are collected in the future, the sample designation will include three fields. For example: BIO-01-FSH. The three alpha characters in the first field, "BIO" identify the sample as a biota (BIO) sample. The second field, "01" represents the numerical designation of the biota sample, and the third field represents the sample type, either fish (FSH) or invertebrate (INV).

- ***Active Soil Gas*** – If ASG samples are collected in the future, designations will include two field separated by dashes. For example: ASG-1. The first field "ASG" identifies the sample type and the second is the distinct number for the sample location.

- ***Passive Soil Gas*** – If PSG samples are collected in the future, sample designations will include two field separated by dashes. For example: PSG-1. The first field "PSG" identifies the sample type and the second is the distinct number for the sample location.

- ***Indoor Air*** – If indoor air samples are required in the future, indoor air evaluation sample designations will include three separate fields separated by dashes. For example:

A-IA-1. The first field "A" identifies the structure that is being evaluated. Generic structure names will be used and cross-referenced to actual addresses and/or building. The second field "IA" designates the type of sample, with the following designation to be used for these samples:

- CS = Crawl Space vapor sample
- IA = Indoor air sample
- BG = Ambient air (outdoor sample)
- SS = Sub-slab soil gas sample.

The third field designates the sample number.

- **Investigation-Derived Waste Sample Designation** – The designation for IDW samples will include three fields separated by dashes; for example: IDW-W-190902.

  — The two alpha characters in the first field, "IDW," identifies that the sample is investigation derived waste.

  — The second field, "W," designates it is a water sample; "S" will be used for the soil cuttings samples.

  — The third field, "190701," represents the date in the following format YYMMDD, in this case 02 September 2019.

2.3.11 Field Duplicate Sample Designation

Field duplicate samples will be identified by adding a "-D" to the end of the sample designations described above. For example: MW-02-D.

2.3.12 Matrix Spike/Matrix Spike Duplicate Sample Designation (for organic analyses)

MS and Matrix Spike Duplicate MSD organic samples will be additional volume for the MS and the MSD. They will be identified with the same identification as original sample identification. This will be noted as extra sample volume for these samples on the COC.

2.3.13 Matrix Spike/Matrix Duplicate Sample Designation (for inorganic analyses)

MS and Matrix Duplicate (MD) inorganic samples will be will be additional volume for the MS and the MSD. They will be identified with the same identification as original sample identification. This will be noted as extra sample volume for these samples on the COC.

2.3.14 Trip, Field, and Equipment Rinsate Blank Sample Designation

Field blank (FB), trip blank (TB), and equipment rinsate blank (ER) samples will be identified by two fields beginning with "FB", "TB", or "ER" respectively, followed by a dash "-", then the

ED_004144A_00000101-00053

sequential number for each type of sample. For example: TB-1, TB-2, TB-3; or ER-1, ER-2, ER-3.

2.4 SAMPLE HANDLING AND CUSTODY

Each sample collected by the EA field team will be traceable from the point of collection through analysis and final disposition to ensure sample integrity. Sample integrity helps to ensure the legal defensibility of the analytical data and subsequent conclusions. Sample handling will follow CLP protocols as required in EPA's *Contract Laboratory Program Guidance for Field Samplers* (EPA 2014) provided in Appendix G. Appendix H contains Fact Sheet entitled *"Site Characterization Considerations, Sampling Precautions, and Laboratory Analytical Methods for Per- and Polyfluoroalkyl Substances (PFAS)"* (ITRC 2018). This Fact Sheet provides and overview for collection and handling of samples undergoing PFC analyses.

EA will use EPA's proprietary data management system "Scribe" to produce the COC records in the field for all laboratories. Applicable copies of generated Scribe files will be delivered to EPA data management personnel as required by CLP protocols.

2.4.1 Sample Documentation

Documentation during sampling is essential to ensure proper sample identification. EA personnel will adhere to the following general guidelines for maintaining field documentation:

- Documentation will be completed in permanent black ink; however, chains of custody will be signed in blue ink
- All entries will be legible
- Errors will be corrected by crossing out with a single line, dating, and initialing
- Any documents will be maintained at EA and referenced in the site logbook
- Unused portions of pages will be crossed out, and each page will be signed and dated.

The EA field team leader is responsible for properly documenting sampling activities.

2.4.1.1 Sample Labels

A sample label will be affixed to each sample container. The label will be completed with the following information written in indelible ink:

- Project name and location
- Sample identification number
- Date and time of sample collection

- Sample collector's initials
- Analysis required.

2.4.1.2 Chain-of-Custody

EA will use standard sample custody procedures to maintain and document sample integrity during collection, transportation, storage, and analysis, following SOP Nos. 2 and 4 (Appendix C). A sample will be considered to be in custody if one of the following statements applies:

- It is in a person's physical possession or view
- It is in a secure area with restricted access
- It is placed in a container and secured with an official seal such that the sample cannot be reached without breaking the seal.

COC procedures provide an accurate written record that traces the possession of individual samples from the time of collection in the field to the time of acceptance at the laboratory. The COC record will be generated by Scribe and will be used to document all samples collected and the analysis requested. Information that the field personnel will record on the chain-of-custody record includes:

- Project name and number
- Sampling location
- Name and signature of sampler
- Destination of samples (laboratory name)
- Sample identification number
- Date and time of collection
- Analysis requested
- Signatures of individuals involved in custody transfer, including the date and time of transfer
- Air bill number (if applicable)
- Project contact and phone number.

ED_004144A_00000101-00055

Unused lines on the COC record will be crossed out. Field personnel will sign COC records that are initiated in the field and the airbill number will be recorded. The record will be placed in a waterproof plastic bag and taped to the inside of the shipping container used to transport the samples. Signed chain-of-custodies will serve as evidence of custody transfer between field personnel and the courier, and between the courier and the laboratory. Copies of the COC record and airbill will be retained and filed by field personnel before the containers are shipped.

The following procedures will be implemented when samples collected during this project are shipped:

- The shipping box will be filled with bubble wrap, sample bottles, and packing material. Sufficient packing material will be used to prevent sample containers from breaking during shipment.

- The COC records will be placed inside a plastic bag. The bag will be sealed and taped to the inside of the cooler. The air bill, if required, will be filled out before the samples are handed over to the carrier. The laboratory will be notified if the sampler suspects that the sample contains any substance that would require laboratory personnel to take safety precautions.

- The shipping box will be closed and taped shut with strapping tape around both ends.

- Signed and dated custody seals will be placed on the front and side of each shipping box. Wide clear tape will be placed over the seals to prevent accidental breakage.

- The COC record will be transported within the taped sealed shipping box. When the shipping box is received at the analytical laboratory, laboratory personnel will open the shipping box and sign the COC record to document transfer of samples.

2.5 ANALYTICAL METHODS REQUIREMENTS

The source of analytical services to be provided will be determined in part by DQOs and the intended use of the resulting data. EA will use EPA CLP, EPA-approved or other industry standard analytical methodologies for laboratory analyses of the samples.

EA will follow the analytical services request procedures that are outlined EA's Analytical Services Delivery Plan (EA 2005). If an analytical system fails, the QA Officer will be notified, and corrective action will be taken. Laboratory corrective actions will include stopping the analysis, examining instrument performance and sample preparation information, and determining the need to re-prepare and reanalyze the samples.

2.5.1 Field Analytical Methods

Water quality parameters that include pH, temperature, specific conductivity, ORP, and turbidity will be monitored using field-based methods during collection of ground water samples. In addition, ground water will also be monitored for dissolved oxygen content. EA will allow manufacturer-recommended procedures for operating field equipment. EA may field screen soils for organic vapors using a photoionization detector in accordance with SOP No. 024.

2.5.2 Fixed-Laboratory Analytical Methods

Fixed laboratory analyses of ground water, surface water, sediment, and soil samples will be conducted by the EPA Region 6 Laboratory, designated CLP laboratories, or EA-subcontracted commercial laboratory. PSG samples will be shipped to an EA-subcontracted laboratory for analysis. Table 4 outlines the anticipated laboratory analytical methods for samples collected for the Phase 1 RI. In all cases, appropriate methods of sample preparation, cleanup, and analyses are based on specific analytical parameters of interest, sample matrices, and required detection limits.

2.6 QUALITY CONTROL REQUIREMENTS

Various field and laboratory QC samples and measurements will be used to verify that analytical data meet the QA objectives. Field QC samples and measurements will be collected to assess the influence of sampling activities and measurements on data quality. Similarly, laboratory QC samples will be used to assess how the laboratory's analytical program influences data quality. This section describes the QC samples that are to be analyzed during the site sampling activities for: (1) each field and laboratory environmental measurement method, and (2) each sample matrix type. Table 3 presents the acceptance criteria for each type of QC sample, and Table 7 presents the frequency of QC samples to be collected at the site.

2.6.1 Field Quality Control Requirements

Field QC samples will be collected and analyzed to assess the quality of data that are generated by sampling activities. These samples will include laboratory QC samples collected in the field, field duplicates, equipment rinsates, field blanks and trip blanks for VOCs, and temperature blanks. Besides these samples, additional aliquot volume to be collected in the field for the laboratory to prepare laboratory QC samples such as MS/MSDs. Field QC sample requirements for fixed-laboratory analyses are presented in Table 7.

Field duplicates are independent samples that are collected as close as possible, in space and time, to the original investigative sample. Field duplicates can measure the influence of sampling and field procedures on the precision of an environmental measurement. They can also provide information on the heterogeneity of a sampling location. Field duplicates will be collected at a frequency of 1 for every 10 investigative samples, unless otherwise directed by EPA. Immediately following collection of the original sample, the field duplicates are collected using the same collection method.

Field blanks are collected to assess: (1) impact from ambient air conditions during sample collection; (2) cross-contamination during sample collection, preservation, and shipment, as well as in the laboratory; and (3) cleanliness of the sample containers. Field blank samples consist of sample containers provided by the laboratory and shipped to the field with the sample canisters. If contaminant is present in the blank samples above the MDL, the result for associated field samples that contain the same contaminant will be qualified as potentially not detected if the concentration of the field sample is less than the reporting limit. If required, field blank samples will be collected in accordance with the frequency listed in Table 7.

Trip blanks are collected to assess volatile organic cross contamination during sample storage and shipment, as well as in the laboratory. Trip blank samples consist of prefilled sample containers provided by the laboratory containing lab-grade purified water. If contamination is present in the blank samples above the MDL, the results for associated field samples that contain the same contaminant will be qualified as potentially not detected if the concentration of the field sample is less than the reporting limit. Trip blank samples will be collected in accordance with frequency listed in Table 7.

Equipment rinsate blanks are collected when non-dedicated or non-disposable sampling equipment is used to collect samples and put the samples into containers. These blanks assess the cleanliness of the sampling equipment and the effectiveness of equipment decontamination. Equipment rinsate blanks are collected by pouring analyte-free water over the decontaminated surfaces of sampling equipment that contacts sampling media. Equipment rinsate blanks are collected after sampling equipment has been decontaminated, but before the equipment is reused for sampling. If non-dedicated or non-disposable equipment is used, equipment rinsate blanks will be collected at a frequency as listed in Table 7.

MS and MSD samples are laboratory QC samples that are collected for organic methods. For aqueous samples, MS/MSDs require double or triple the normal sample volume, depending on analytical laboratory specifications. In the laboratory, MS/MSDs are split and spiked with known amounts of analytes. Analytical results for MS/MSDs samples are used to measure the precision and accuracy of the laboratory's organic analytical program. These QC samples will be collected and analyzed at a frequency of one for every 20 investigative samples for CLP laboratories. EPA Region 6 laboratory or EA-subcontracted laboratories. MS/MSD samples will not be collected for alkalinity, hardness, TDS, TSS, and TOC sample analyses.

Temperature blanks are containers of water that are placed in each cooler shipped to the laboratory. Their purpose is to provide a container to test the temperature of the samples in the respective cooler upon receipt at the laboratory.

2.6.2 Laboratory Quality Control Requirements

All laboratories that perform analytical work under this project must adhere to a QA program that is used to monitor and control all laboratory QC activities. Each laboratory must have a written QA manual that describes the QA program in detail. The laboratory QA manager is

ED_004144A_00000101-00058

responsible for ensuring that all laboratory internal QC checks are conducted in accordance with EPA methods and protocols, the laboratory's QA manual, and the requirements of this SAP.

Many of the laboratory QC procedures and requirements are described in EPA-approved analytical methods, laboratory method SOPs, and method guidance documents.

The EPA methods specify the preparation and analysis of QC samples, and may include, but are not limited to, the following types: (1) LCSs, (2) method blanks, (3) MS and MSD samples, (4) surrogate spikes, and (5) standard reference materials or independent check standards. The following subsections discuss the QC checks that will be required for this project.

2.6.2.1 Laboratory Control Sample

LCSs are thoroughly characterized, laboratory-generated samples that are used to monitor the laboratory's day-to-day performance of analytical methods. The results of LCS analyses are compared to well-defined laboratory control limits to determine whether the laboratory system is in control for the particular method. If the system is not in control, corrective action will be implemented. Appropriate corrective actions will include: (1) stopping the analysis, (2) examining instrument performance or sample preparation and analysis information, and (3) determining whether samples should be re-prepared or reanalyzed.

2.6.2.2 Method Blanks

Method blanks, which are also known as preparation blanks, are analyzed to assess the level of background interference or contamination in the analytical system and the level that may lead to elevated concentration levels or false-positive data. Method blanks will be required for laboratory analyses and will be prepared and analyzed at a frequency of one method blank per every 20 samples or one method blank per batch, if the batches consist of fewer than 20 samples.

A method blank consists of reagents that are specific to the analytical method and are carried through every aspect of the analytical procedure, including sample preparation, cleanup, and analysis. The results of the method blank analysis will be evaluated in conjunction with other QC information to determine the acceptability of the data generated for that batch of samples. Ideally, the concentration of a target analyte in the method blank will be below the reporting limit for that analyte. For some common laboratory contaminants, a higher concentration may be allowed.

If the method blank for any analysis is beyond control limits, the source of contamination must be investigated, and appropriate corrective action must be taken and documented. This investigation includes an evaluation of the data to determine the extent of the contamination and its effect on sampling results. If a method blank is within control limits but analysis indicates a concentration of analytes above the reporting limit, an investigation should be conducted to determine whether corrective action could eliminate an ongoing source of target analytes.

For organic and inorganic analyses, the concentration of target analytes in the method blank must be below the reporting limit for that analyte for the blank to be considered acceptable. An exception may be made for common laboratory contaminants (i.e., methylene chloride, acetone, 2-butanone, and phthalate esters) that may be present in the blank at up to five times the reporting limit. These compounds are frequently detected at low levels in method blanks from materials that are used to collect, prepare, and analyze samples for organic parameters.

2.6.2.3 Matrix Spikes and Matrix Spike Duplicates

MS and MSD are aliquots of an environmental sample to which known concentrations of target analytes and compounds have been added. The MS is used to evaluate the effect of the sample matrix on the accuracy of the analysis. If there are many target analytes, they will be divided into 2-3 spike standard solutions. Each spike standard solution will be used alternately. The MS, in addition to an unspiked aliquot, will be taken through the entire analytical procedure, and the recovery of the analytes will be calculated. Results will be expressed in terms of percent recoveries and RPD. The percent recoveries of the target analytes and compounds are calculated and used to determine the effects of the matrix on the precision and accuracy of the method. The RPD between the MS and MSD results is used to evaluate method precision.

The MS/MSD is divided into three separate aliquots, two of which are spiked with known concentrations of target analytes. The two spiked aliquots, in addition to an unspiked sample aliquot, are analyzed separately, and the results are compared to determine the effects of the matrix on the precision and accuracy of the analysis. Results will be expressed as RPD and percent recovery and compared to control limits that have been established for each analyte. If results fall outside control limits, corrective action will be performed.

2.6.2.4 Surrogate Spikes

Surrogates are organic compounds that are similar to the analytes of interest in chemical properties but are not normally found in environmental samples. Surrogates are added to field and QC samples, before the samples are extracted, to assess the efficacy of the extraction procedure and to assess the bias that is introduced by the sample matrix. Results are reported in terms of percent recovery. Individual analytical methods may require sample reanalysis based on surrogate criteria.

The laboratory will use surrogate recoveries mainly to assess matrix effects on sample analysis. Obvious problems with sample preparation and analysis (such as evaporation to dryness or a leaking septum) that can lead to poor surrogate spike recoveries must be eliminated before low surrogate recoveries can be attributed to matrix effects.

2.7 INSTRUMENT AND EQUIPMENT TESTING, INSPECTION, AND MAINTENANCE REQUIREMENTS

This section outlines testing, inspection, and maintenance procedures for field equipment and instruments and for laboratory instruments.

2.7.1 General Requirements

Testing, inspection, and maintenance methods and frequency will be based on: (1) the type of instrument; (2) the instrument's stability characteristics; (3) the required accuracy, sensitivity, and precision of the instrument; (4) the instrument's intended use, considering project-specific DQOs; (5) manufacturer's recommendations; and (6) other conditions that affect measurement or operational control. For most instruments, preventive maintenance is performed in accordance with procedures and schedules recommended in: (1) the instrument manufacturer's literature or operating manual or (2) SOPs associated with particular applications of the instrument.

In some cases, testing, inspection, and maintenance procedures and schedules will differ from the manufacturer's specifications or SOPs. This can occur when a field instrument is used to make critical measurements or when the analytical methods that are associated with a laboratory instrument require more frequent testing, inspection, and maintenance.

2.7.2 Field Equipment and Instruments

Leased field equipment and instruments will be used to conduct field sampling and oversight activities. The vendor will be responsible for thoroughly checking and calibrating field equipment and instruments before they are shipped or transported to the field. Copies of testing, inspection, and maintenance procedures will be shipped to the field with the equipment and instruments.

After the field equipment and instruments arrive in the field, they will be inspected for damage. Damaged equipment and instruments will be replaced or repaired immediately. Battery-operated equipment will be checked to ensure full operating capacity; if needed, batteries will be recharged or replaced.

Following use, field equipment will be decontaminated properly before being returned to the source. When the equipment is returned, copies of any field notes regarding equipment problems will be included so that problems are not overlooked and any necessary equipment repairs are performed.

2.7.3 Laboratory Instruments

Laboratories that analyze samples collected under EA's EPA Region 6 RAC II program must have a preventive maintenance program that addresses: (1) testing, inspection, and maintenance procedures, and (2) the maintenance schedule for each measurement system and required support activity. This program is usually documented by an SOP for each analytical instrument that is to be used. Typically, the program will be laboratory-specific; however, it should follow requirements outlined in EPA-approved guidelines. Some of the basic requirements and components of such a program are as follows:

- As a part of its QA/QC program, each laboratory will conduct a routine preventive maintenance program to minimize instrument failure and other system malfunction.

ED_004144A_00000101-00061

- An internal group of qualified personnel will maintain and repair instruments, equipment, tools, and gauges. Alternatively, manufacturers' representatives may provide scheduled instrument maintenance and emergency repair under a repair and maintenance contract.

- The laboratory will perform instrument maintenance on a regularly scheduled basis. The scheduled service of critical items should minimize the downtime of the measurement system. The laboratory will prepare a list of critical spare parts for each instrument. The laboratory will request the spare parts from the manufacturer and will store the parts.

- Testing, inspection, and maintenance procedures described in laboratory SOPs will be performed in accordance with manufacturer's specifications and the requirements of the specific analytical methods that are used.

- Maintenance and service must be documented in service logbooks (or the site-specific logbook) to provide a history of maintenance records. A separate service logbook should be kept for each instrument; however, due to the limited scope of this project, the service records will be maintained in the site-specific field log book. Maintenance records will be traceable to the specific instrument, equipment, tool, or gauge.

- The laboratory will maintain and file records that are produced as a result of tests, inspections, or maintenance of laboratory instruments. These records will be available for review by internal and external laboratory system audits that are conducted under EA's EPA Region 6 RAC II program.

2.8 INSTRUMENT CALIBRATION AND FREQUENCY

This section describes the procedures for maintaining the accuracy of field equipment and laboratory instruments that are used for field tests and laboratory analyses. The equipment and instruments should be calibrated before each use or, when not in use, on a scheduled periodic basis.

2.8.1 Field Equipment

EA will perform calibration of field equipment during the field activities specified herein. Calibration of the field equipment (e.g., multi-parameter water quality meter or photoionization detector) will be conducted on a daily basis following manufacturer recommendations and will be performed prior to sample analysis activities. Should readings appear to be questionable during sample analysis, EA will recalibrate the equipment as deemed necessary. The equipment calibration procedures described below will be followed.

Equipment will be maintained and calibrated with sufficient frequency and in such a manner that the accuracy and reproducibility of results are consistent with the manufacturer's specifications and with project-specific DQOs. Upon arrival of the field equipment, EA field personnel will examine it to verify that it is in good working condition. The manufacturer's

ED_004144A_00000101-00062

operating manual and instructions that accompany the equipment will be consulted to ensure that calibration procedures are followed. Measuring and testing equipment may be calibrated either internally—by using in-house reference standards—or externally—by agencies, manufacturers, or commercial laboratories. Calibration records will contain a reference identifying the source of the procedure and, where feasible, the actual procedure. Each piece of measuring and testing equipment will also be accompanied by an equipment use log. The equipment use log (which may be contained within the site-specific field logbook) will be kept current and may contain the following information: (1) date of use, (2) times of use, (3) operating and assisting technicians, (4) calibration status, and (5) comments.

2.8.2 Laboratory Instruments

Laboratory equipment that is used to analyze samples collected under EA's EPA Region 6 RAC II program will be calibrated on the basis of written SOPs that are maintained by the laboratory. Calibration records (including the dates and times of calibration and names of the personnel performing the calibration) will be filed at the location at which the analytical work was performed and maintained by the laboratory personnel who performed QC activities. Subcontractor laboratories may conduct laboratory work under EA's EPA Region 6 RAC II program. The laboratory QA Manager is responsible for ensuring that laboratory instruments are calibrated in accordance with the requirements of this SAP.

The laboratories will follow the method-specific calibration procedures and requirements for laboratory measurements. Calibration procedures and requirements will also be provided, as appropriate, for laboratory support equipment, such as balances, mercury thermometers, pH meters, and other equipment that is used to take chemical and physical measurements.

2.9 REQUIREMENTS FOR INSPECTION AND ACCEPTANCE OF SUPPLIES AND CONSUMABLES

The EA Project Manager is responsible for identifying the types and quantities of supplies and consumables that are needed for collecting the samples for this Task Order. The Project Manager is also responsible for determining acceptance criteria for these items. Supplies and consumables can be received at an EA office, equipment distribution center or at the site. When supplies are received, the EA field personnel will sort the supplies according to vendor, check packing slips against purchase orders, and inspect the condition of all supplies before the supplies are accepted for use on a project. If the supplies do not meet the acceptance criteria, deficiencies will be noted on the packing slip and purchase order. In addition, a form will be completed describing the problem and circumstances, and noting the purchase order number of the item. Afterward, the item will be returned to the vendor for replacement or repair.

2.10 DATA ACQUISITION REQUIREMENTS (NON-DIRECT MEASUREMENTS)

For this project, EA anticipates acquiring data from non-direct measurements such as databases, spreadsheets, and literature files.

ED_004144A_00000101-00063

2.11 DATA MANAGEMENT

A comprehensive data management program has been designed to assure that: (1) multiple information sources will result in similar data sets, and (2) data management practices will be adequate for the types of data processing required by a Task Order. Site team members will follow these protocols to assure results will have uniform units of measure, analytical methods, and reporting forms.

Data for this project will be obtained from field measurements, EPA Region 6 Laboratory, a designated CLP laboratory, or an EA subcontracted laboratory. The data-gathering process requires a coordinated effort and will be conducted by project staff members in conjunction with all potential data producers. The data will be obtained from the EA subcontracted laboratory, when appropriate, in the form of an EDD, in addition to the required Level 4 type analytical data package. Formal verification (or validation) of data will be conducted before associated results are presented or are used in subsequent activities.

Data tracking is essential to ensure timely, cost-effective, and high quality results. Data tracking begins with sample COC. When the analytical service provider receives custody of the samples, the provider will send a sample acknowledgment to EA. The sample acknowledgment will confirm sample receipt, condition, and required analyses. The EPA tracking software (Scribe) will contain all pertinent information about each sample and can track the data at each phase of the process. The tracking software carries the data through completion of the data validation.

An EPA Stage 2B validation will be conducted on 100 percent of the Phase 1 RI analytical data generated by the EA subcontracted laboratory to ensure the data are accurate and defensible. All data will be evaluated for usability by EA in accordance with EPA CLP guidelines for data review (EPA 2017a, 2017b). IDW sample data will not undergo data validation but will be reviewed for compliance and completeness.

As a part of the data validation process, EDDs will be reviewed against hard copy deliverables to ensure accurate transfer of data. In addition, the hard copy will be evaluated for errors in the calculation of results. After data validation is complete, qualifiers can be placed on the data to indicate the usability of the data. These qualifiers will be placed into an electronic data file. Upon approval of the data set with the appropriate data qualifiers, the electronic data will be released to the Project Manager for reporting.

ED_004144A_00000101-00064

3. ASSESSMENT AND OVERSIGHT

This section describes the field and laboratory assessments that may be conducted during this project, the individuals responsible for conducting assessments, corrective actions that may be implemented in response to assessment results, and how quality-related issues will be reported to EA and EPA.

3.1 ASSESSMENT AND RESPONSE ACTIONS

Under EA's EPA Region 6 RAC II program, performance and system audits of field and laboratory activities may be conducted to verify that sampling and analysis are performed in accordance with the following:

- Performance and System Audits
  - Audit personnel
  - Audit scope of work
  - Audit frequencies
  - Audit reports.

- Corrective Action
  - Sample collection and field measurements
  - Laboratory analyses.

Non-conforming items and activities are those that do not meet the project requirements, procurement document criteria, and approved work procedures. Non-conformance may be detected and identified by the following personnel:

- Project personnel—During field operations, supervision of subcontractors, and field inspections

- Testing personnel—During preparation for and performance of tests, equipment calibration, and QC activities

- QA personnel—During the performance of audits, surveillance, and other QA activities.

Each non-conformance that affects quality will be documented by the person who identifies or originates the nonconformance. Documentation of non-conformance will include the following components:

- Description of nonconformance

- Identification of personnel who are responsible for correcting the nonconformance and, if verification is required, for verifying satisfactory resolution

ED_004144A_00000101-00065

- Method(s) for correcting the nonconformance (corrective action) or description of the variance granted

- Proposed schedule for completing the corrective action and the corrective action taken.

Nonconformance documentation will be made available to the Project Manager, QA Manager, and subcontractor (e.g., non-CLP subcontract laboratories) management personnel, as appropriate.

The field personnel and QA personnel, as appropriate, are responsible for notifying the Project Manager and the QA manager of each nonconformance. In addition, the Project Manager and the project staff, as appropriate, will be notified of significant nonconformance that could affect the results of the work. The Project Manager is responsible for determining whether the notification of EPA is required.

The completion of corrective actions for significant nonconformance will be documented by QA personnel during future auditing activities. Any significant recurring nonconformance will be evaluated by project and QA personnel, as appropriate, to determine its cause. Appropriate changes will be instituted, under corporate or project procedures, to prevent recurrence. When such an evaluation is performed, the results will be documented.

3.2 REPORTS TO MANAGEMENT

Effective management of environmental data collection operations requires timely assessment and review of measurement activities. It is essential that open communication, interaction, and feedback be maintained among all project participants, including the: (1) EA QA Manager, program manager, Project Manager, technical staff, and laboratory subcontractors and (2) EPA Region 6 TOM and QA Officer. EA prepares monthly progress reports for each Task Order that is conducted under EA's EPA Region 6 RAC II program. These reports address any QA issues that are specific to the Task Order and facilitate timely communication of such issues.

At the program level, the QA Manager prepares quarterly status reports of QA issues that are related to EA's work on EA's EPA Region 6 RAC II program. These reports are distributed to EA's President; corporate QA manager; RAC II program manager; and, upon request, EPA Region 6 project officer. QA status reports address the following areas:

- Results of QA audits and other inspections, including any quality improvement opportunities that have been identified for further action

- Instrument, equipment, or procedural problems that affect QA

- Subcontractor performance issues

- Corrective actions

- Status of previously reported activities and continuous quality improvement initiatives
- Work planned for the next reporting period.

4. DATA VALIDATION AND USABILITY

This section describes the procedures that are planned to review, verify, and validate data acquired during this project. This section also discusses procedures for verifying that the data are sufficient to meet DQOs and measurement quality objectives for the project.

4.1 DATA REVIEW AND REDUCTION REQUIREMENTS

Data reduction and review are essential functions for preparing data that can be used effectively to support project decisions and DQOs. These functions must be performed accurately and in accordance with EPA-approved procedures and techniques. Data reduction includes all computations and data manipulations that produce the final results that are used during the investigation. Data review includes all procedures that field or laboratory personnel conduct to ensure that measurement results are correct and acceptable in accordance with the QA objectives that are stated in this SAP. Field and laboratory measurement data reduction and review procedures and requirements are specified in previously discussed field and laboratory methods, SOPs, and guidance documents.

Field personnel will record, in a field logbook and/or on the appropriate field form (Appendix E), all raw data from chemical and physical field measurements. The EA field staff will have the primary responsibility for: (1) verifying that field measurements were made correctly, (2) confirming that sample collection and handling procedures specified in this project-specific SAP are followed, and (3) ensuring that all field data reduction and review procedures requirements are followed. The EA field staff is also responsible for assessing preliminary data quality and for advising the data user of any potential QA/QC problems with field data. If field data are used in a project report, data reduction methods will be fully documented in the report.

The EPA Region 6 laboratory, CLP laboratories, and/or EA subcontracted laboratories will complete data reduction for chemical and physical laboratory measurements and will complete an in-house review of all laboratory analytical results. The Laboratory QA manager will be responsible for ensuring that all laboratory data reduction and review procedures follow the requirements that are stated in this SAP. The Laboratory QA manager will also be responsible for assessing data quality and for advising the EA QA manager of possible QA/QC problems with laboratory data.

4.2 VALIDATION AND VERIFICATION METHODS

All data that are used to support activities under EA's EPA Region 6 RAC II program must be valid for their intended purposes. This section outlines the basic data validation procedures that will be followed for all field and laboratory measurements. The following subsections identify

ED_004144A_00000101-00067

personnel who are responsible for data validation and the general data validation process and EPA data validation guidance that will be followed.

4.2.1 Data Validation Responsibilities

When analytical services are provided by laboratories subcontracted by EA, EA is responsible for data validation. The QA Manager has primary responsibility for coordinating EA's data validation activities. EA or an independent third-party subcontractor will perform an EPA Stage 2B validation on 100 percent of subcontractor laboratory data for the Phase 1 RI samples. Data validation will be completed by one or more experienced data reviewers or a third-party subcontractor. When data are generated by the EPA Region 6 Laboratory, it will be used as received from the laboratory, with no further validation. Data from CLP laboratories are validated by EPA's Environmental Services Assistance Team.

4.2.2 Data Validation Procedures

The validity of a data set is determined by comparing the data with a predetermined set of QC limits. Data reviewers will conduct a systematic review of the data for compliance with established QC limits (such as sensitivity, precision, and accuracy), on the basis of spike, duplicate, and blank sampling results that are provided by the laboratory. The data review will identify any out-of-control data points or omissions. Phase 1 RI data will be evaluated for compliance with the following criteria:

- Method and project-specific analytical service requests
- Holding times
- Initial and continuing calibration acceptance criteria
- Field, trip, equipment rinse and method blank acceptance criteria
- Surrogate recovery
- Field duplicates RPD
- MS and MSD acceptance criteria
- LCS and LCSD acceptance criteria
- Other laboratory QC criteria specified by the method or on the project-specific analytical service request form
- Compound identification and quantitation

ED_004144A_00000101-00068

- Overall assessment of data, in accordance with project-specific objectives.

The most current EPA CLP guidelines (EPA 2002, 2017a, 2017b) for completing data validation for all applicable test methods will be followed. General procedures in the CLP guidelines will be modified, as necessary, to fit the specific analytical method that is used to produce the data. In all cases, data validation requirements will depend on: (1) DQO levels that are defined in Section 1.3, (2) reporting requirements that are defined in Section 1.5, and (3) data deliverables that are requested from the laboratory, as discussed in Section 1.5.

4.3 RECONCILIATION WITH DATA QUALITY OBJECTIVES

The main purpose of a QA system is to define a process for collecting data that are of known quality, are scientifically valid, are legally defensible, and fully support decisions that will be based on the data. To achieve this purpose, the QAPP requires that DQOs be fully defined (Section 1.3). Other parts of the QA system must then be planned and implemented in a manner that is consistent with the DQOs. QA system components that follow directly from the DQOs include: (1) documentation and reporting requirements (Section 1.5), (2) sample process design and sampling methods requirements (Sections 2.1 through 2.4), (3) analytical methods and analytical service requests (Section 2.5), (4) QC requirements (Section 2.6), and (5) data reduction and validation and reporting methods (Sections 4.1 and 4.2).

After environmental data have been collected, reviewed, and validated, the data will undergo a final evaluation to determine whether the DQOs specified in this SAP have been met. EA will follow EPA's DQA process to verify that the type, quality, and quantity of data that are collected are appropriate for their intended use (EPA 2006a, 2006b, 2006c).

The DQA process involves: (1) verifying that the data have met the assumptions under which the data collection design and DQOs were developed, (2) taking appropriate corrective action if the assumptions have not been met, and (3) evaluating the extent to which the data support the decision that must be made so that scientifically valid and meaningful conclusions can be drawn from the data. To the extent possible, DQA methods and procedures that have been outlined by EPA will be followed (EPA 2006a, 2014) to verify that the type, quality, and quantity of data collected are appropriate for their intended (EPA 2000, 2006a).

EA will strive to follow EPA's DQA process to verify that the type, quality, and quantity of data collected are appropriate for their intended use. The DQA process includes five steps: (1) review the DQOs and sampling design, (2) conduct a preliminary data review, (3) select a statistical test, (4) verify the assumptions of the statistical test, and (5) draw conclusions from the data.

When the five-step DQA process is not completely followed because the DQOs are qualitative, DQOs will systematically assess data quality and data usability. This assessment may include:

- A review of the sampling design and sampling methods to verify that these were implemented as planned and are adequate to support project objectives.

ED_004144A_00000101-00069

- A review of project-specific data quality indicators for PARCCS and quantitation limits to determine whether acceptance criteria have been met.

- A review of project-specific DQOs to determine whether they have been achieved by the data collected.

- An evaluation of any limitations associated with the decisions to be made based on the data collected. For example, if data completeness is only 90 percent compared to a project-specific completeness objective of 95 percent, the data may still be usable to support a decision, but at a lower level of confidence.

5. REFERENCES

EA Engineering, Science, and Technology, Inc., PBC (EA). 2005. *Analytical Services Delivery Plan for EPA Region 6 Remedial Action Contract 2 Full Service.* August.

———. 2014. *Quality Management Plan for U.S. Environmental Protection Agency Region 6 Remedial Action Contract 2 Full Service, NAICS 562910 Small Business Set-Aside.* Revision 07. 19 December.

———. 2018a. *Phase 1 Remedial Investigation Fixed Rate Work Plan for Lane Plating Works Superfund Site Dallas, Dallas County, Texas.* September.

———. 2018b. *Health and Safety Plan for Remedial Investigation, Lane Plating Works Superfund Site Dallas, Dallas County, Texas.* November.

Interstate Technology Regulatory Council (ITRC). 2018. *Site Characterization Considerations, Sampling Precautions, and Laboratory Analytical Methods for Per- and Polyfluoroalkyl Substances (PFAS).* March

Texas Commission on Environmental Quality (TCEQ). 2016. *Preliminary Assessment, Lane Plating Works, Inc., Dallas, Dallas County, Texas, TXN000605240.* Prepared in cooperation with the U.S. Environmental Protection Agency. May

———. 2017. *Site Inspection Report, Lane Plating Works, Inc., Dallas, Dallas County, Texas, TXN000605240.* Prepared in cooperation with the U.S. Environmental Protection Agency. January.

U.S. Environmental Protection Agency (EPA). 2000. *Guidance for Data Quality Objective Process: EPA QA/G-4.* EPA 600/R-96/055. Office of Environmental Information. Washington, D.C. August.

———. 2001. *EPA Requirements for Quality Assurance Project Plans for Environmental Data Operations: EPA QA/R-5.* Final. EPA/240/B-01/003. Quality Assurance Management Staff. Washington, D.C. March.

———. 2002. *Guidance for Quality Assurance Project Plans: EPA QA/G-5.* EPA/240/R-02/009. Office of Environmental Information. Washington, D.C. December.

———. 2006a. *Guidance on Systematic Planning Using the Data Quality Objectives Process, EPA QA/G-4.* EPA/240/B-06/001. Office of Environmental Information. Washington, D.C.. February.

ED_004144A_00000101-00071

———. 2006b. *Data Quality Assessment: A Reviewers Guide (QA/G-9R)*. EPA/240/B-06/002. Office of Environmental Information. Washington, D.C. February.

———. 2006c. *Data Quality Assessment: Statistical Methods for Practitioners (QA/G-9S)*. EPA/240/B-06/003. Office of Environmental Information. Washington, D.C. February.

———. 2014. *Contract Laboratory Program Guidance for Field Samplers. EPA-540-R-014-013. OSRTI.* Washington D.C. October.

———. 2016a. *Contract Laboratory Program Statement of Work for Inorganic Superfund Methods (ISM02.4).* Washington D.C. October

———. 2016b. *Contract Laboratory Program Statement of Work for Organic Methods(SOM02.4).* Washington D.C. October.

———. 2017a. *USEPA Contract Laboratory Program National Functional Guidelines for Superfund Organic Methods Data Review . EPA-540-R-2017-001. OSRTI.* Washington D.C. January.

———. 2017b. *USEPA Contract Laboratory Program National Functional Guidelines for Superfund Organic Methods Data Review. EPA-540-R-2017-002. OSRTI.* Washington D.C. January.

———. 2018a. *Hazard Ranking System Documentation Record, Lane Plating Works, Inc. January.*

———. 2018b. *National Priority List, Lane Plating Works, Inc., Dallas, Dallas County, Texas.* May.

———. 2018c. *RAC II Statement of Work for Phase 1 Remedial Investigation (RI), Fixed Rate Task Order, Lane Plating Works, Dallas, Dallas County, Texas.* August.

U.S. Geological Survey (USGS). 2014. National Field Manual for the Collection of Water-Quality Data, Chapter A2, Selection of Equipment for Water Sampling. Reston, VA.

Weston Solutions, Inc. (Weston). 2016. *Removal Report for Lane Plating Removal Action, 5322 Bonnie View Road, Dallas, Dallas County, Texas*. December.

ED_004144A_00000101-00072

FIGURES

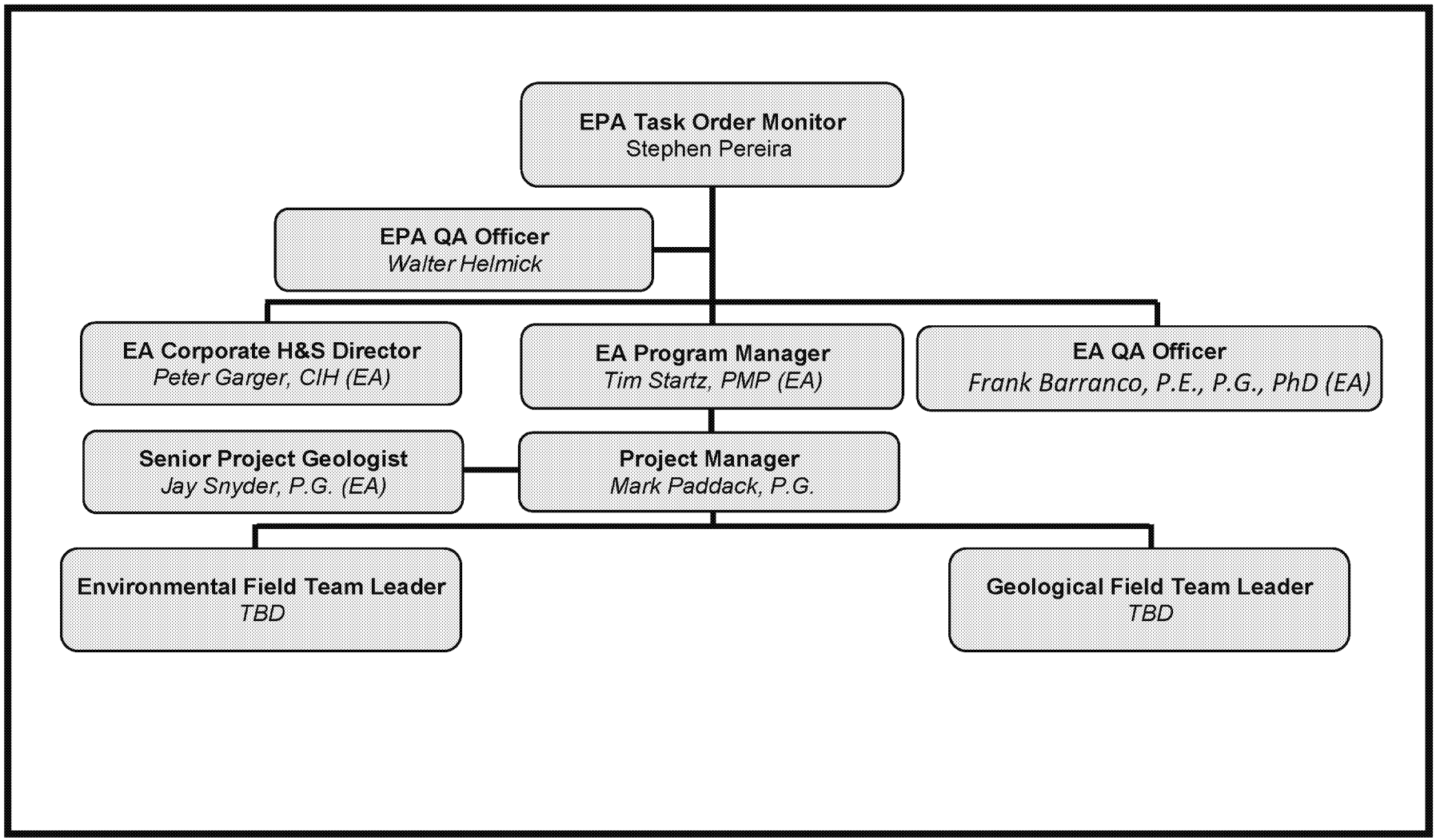

Figure 1. Project Organization.

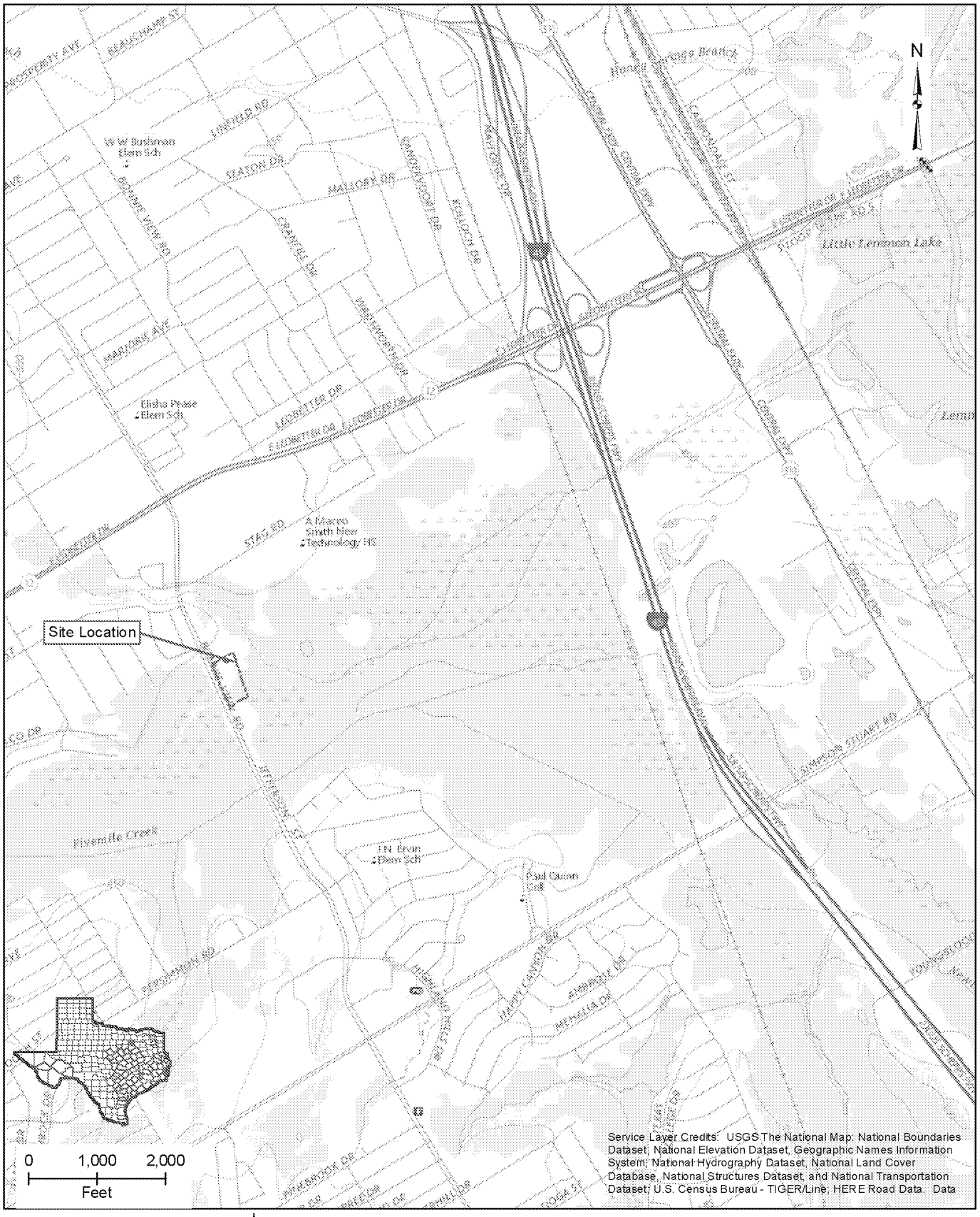

Lane Plating Works Superfund Site
Dallas, Dallas County, Texas

Figure 2
Site Location

2018-10-19 M:\Federal\EPA\RAC II\0163-Lane RI-FS_309\GIS\MXDs\LP_SiteLoc.mxd EA-Dallas jschwartz

N

0 100 200
Feet

Legend

- On-site Wells
- Overland Flow
- Approximate Site Boundary
- Stream
- Stream Seasonal
- Freshwater Emergent Wetland
- Freshwater Forested /Shrub Wetland
- Freshwater Pond

Note:
HWTB: Hazardous Waste Treatment Building

Imagery Source:
Site:Texas Orthoimagery
Program 2015 0.5 Meter DOQQ,
Texas Strategic Mapping Program, 2015.

Lane Plating Works Superfund Site
Dallas, Dallas County, Texas

Figure 3
Site Features

Appendix A

Sampling Design Matrix

Lane Plating Works, Inc. Superfund Site
Dallas, Dallas County, Texas

Imagery Source: Texas Orthoimagery Program 2015 0.5 Meter DOQQ, Texas Strategic Mapping Program, 2015.

Figure A-1
Phase 1 Remedial Investigation
Monitoring Well and Water Well
Sample Locations

2016-11-14 M:\Ferrari\EPA\RAC II\016\-Lane RI-FS_309\GIS\MXDs\SAP\A1_Sap_1_P_GW.mxd EA-Dallas jschwartz

Table A-1: Sampling Design Matrix - Phase 1
Ground Water Sampling

Sample Location	Sample Identification	Sampling Method	Analyses										
			Field Parameters	[1]Total Dissolved Solids	VOCs (low water)	SVOCs	Total (Unfiltered) TAL Metals (includes Mercury)	Dissolved (Filtered) TAL Metals (includes Mercury)	[1]Cyanide	[1]Hexavalent Chromium	PCBs	[1]PFCs	[1]TPH
CMT and Monitoring Wells													
MW-01	MW-01	Micro Purge and Sample	1	1			1	1		1			
MW-02	MW-09	Micro Purge and Sample	1	1			1	1		1			
MW-03	MW-03	Micro Purge and Sample	1	1			1	1		1			
WW-01	WW-01	Micro Purge and Sample	1	1	1	1	1	1	1	1	1	1	1
WW-02	WW-02	Micro Purge and Sample	1	1			1	1		1			
		Subtotal Monitoring Wells	**5**	**5**	**1**	**1**	**5**	**5**	**1**	**5**	**1**	**1**	**1**
		Total Ground Water Samples	**5**	**5**	**1**	**1**	**5**	**5**	**1**	**5**	**1**	**1**	**1**
Ground Water QC Samples													
Field duplicates	Same as original with "-D" added to the ID, for example MW-16-D	1 per 10 samples	0	0	1	1	1	1	1	1	1	1	1
MS/MSDs	Same as original sample identification	1 per 20 samples (extra volume consisting of one container for MS and one container for MSD per each MS/MSD sample)	0	0	1	1	1	1	1	1	1	1	1
Trip blanks	TB with number; for example TB-1, TB-2, etc.	1 per cooler containing aqueous samples for VOC analysis	0	0	1	0	0	0	0	0	0	0	0
Equipment blanks	ER with number; for example ER-1, ER-2, etc.	1 per day per set of for nondedicated equipment per team	0	0	1	1	1	1	1	2	1	1	1
Total Ground Water Samples Including QC			**5**	**5**	**5**	**4**	**8**	**8**	**4**	**9**	**4**	**4**	**4**

NOTES:
Field parameters: pH, temperature, conductivity, dissolved oxygen, oxidation-reduction potential, and turbidity
[1] Total dissolved solids, cyanide, hexavalent chromium, PFCs, and TPH analyses for ground water samples will be conducted by a private laboratory.

MS = Matrix spike
MSD = Matrix spike duplicate
QC = Quality control
PBC = Polychlorinated biphenyls
PFCs = Perfluorochemicals
SVOCs = Semivolatile organic compounds
TAL = Total analyte list
TPH = Total petroleum hydrocarbons
VOCs = Volatile organic compounds

Objective of Sampling - To verify whether or not contaminants of potential concern are present within the alluvial ground water, and to define the nature and extent of ground water impact.
Activities to be Conducted - The tasks of this field investigation that will be performed during Phase 1 include: (1) Collection of ground water samples from the newly installed ground water monitoring wells, and (2) Collect a ground water samples from existing onsite water wells.
Sample Locations - See Figure A-1 in Appendix A of the Sampling and Analysis Plan

COPC	EPA RSL Residential (mg/kg)	EPA RSL Industrial (mg/kg)
Chromium	120000	1800000
Hexavalent Chromium	0.3	6.3
Cyanide	23	150
Lead	400	800
Mercury	11	46

Lane Plating Works, Inc. Superfund Site
Dallas, Dallas County, Texas

Imagery Source: Texas Orthoimagery Program 2015 0.5 Meter DOQQ, Texas Strategic Mapping Program, 2015.

Figure A-2
Phase 1 Remedial Investigation
Soil Sample Locations

2016-11-14 M:\Feriprb\EPA\RAC II\0168-Lane RI-FS_309\GIS\MXDs\SAP\A2_Sap_LP_Soil.mxd EA-Dallas jschwentz

Table A-2: Sampling Design Matrix - Phase 1
Soil Sampling

Sample Location	Boring Total Depth (ft bgs)	Sample Medium	Rationale	Number of Sample Locations	Sample Identification	Sampling Tool	Sampling Depth (ft bgs)	Analysis: Field Screening by PID	[2,3]Geotechnical Parameters	VOCs	SVOCs	TAL Metals (includes Mercury)	[2]Cyanide	[2]Hexavalent Chromium	PCBs	[2]PFCS	[2]ORP	[2]pH	[2]TPH
Soil Borings (Surface Soil and Subsurface Soil)																			
DSB- 1	15	Surface soil	To delineate nature and extent	1	DSB-1-0.0-0.5	Split spoon Continuous sampler PVC/acetate sleeve, 5 ft core barrel, or hand auger	0.0 - 0.5	Yes				1		1					
				1	DSB-1-0.5-2.0		0.5 - 2.0	Yes				1		1					
		Subsurface soil		1	DSB-1-XX-XX		Total Depth of 15 ft. or Refusal	Yes				1		1					
DSB- 2	15	Surface soil		1	DSB-2-0.0-0.5		0.0 - 0.5	Yes				1		1					
				1	DSB-2-0.5-2.0		0.5 - 2.0	Yes		1	1	1	1	1	1	1	1	1	1
		Subsurface soil		1	DSB-2-XX-XX		Total Depth of 15 ft. or Refusal	Yes				1		1					
DSB- 3	15	Surface soil		1	DSB-3-0.0-0.5		0.0 - 0.5	Yes				1		1					
				1	DSB-3-0.5-2.0		0.5 - 2.0	Yes				1		1					
		Subsurface soil		1	DSB-3-XX-XX		Total Depth of 15 ft. or Refusal	Yes				1		1					
DSB- 4	15	Surface soil		1	DSB-4-0.0-0.5		0.0 - 0.5	Yes				1		1					
				1	DSB-4-0.5-2.0		0.5 - 2.0	Yes				1		1					
		Subsurface soil		1	DSB-4-XX-XX		Total Depth of 15 ft. or Refusal	Yes				1		1					
DSB- 5	15	Surface soil		1	DSB-5-0.0-0.5		0.0 - 0.5	Yes				1		1					
				1	DSB-5-0.5-2.0		0.5 - 2.0	Yes				1		1					
		Subsurface soil		1	DSB-5-XX-XX		Total Depth of 15 ft. or Refusal	Yes				1		1					
DSB- 6	15	Surface soil		1	DSB-6-0.0-0.5		0.0 - 0.5	Yes				1		1					
				1	DSB-6-0.5-2.0		0.5 - 2.0	Yes				1		1					
		Subsurface soil		1	DSB-6-XX-XX		Total Depth of 15 ft. or Refusal	Yes				1		1					
DSB- 7	15	Surface soil		1	DSB-7-0.0-0.5		0.0 - 0.5	Yes				1		1					
				1	DSB-7-0.5-2.0		0.5 - 2.0	Yes		1	1	1	1	1	1	1	1	1	1
		Subsurface soil		1	DSB-7-XX-XX		Total Depth of 15 ft. or Refusal	Yes				1		1					
DSB- 8	15	Surface soil	To delineate nature and extent (if needed, locations will be identified in future based on intial soil boring results)	1	DSB-8-0.0-0.5		0.0 - 0.5	Yes				1		1					
				1	DSB-8-0.5-2.0		0.5 - 2.0	Yes		1	1	1	1	1	1	1	1	1	1
		Subsurface soil		1	DSB-8-XX-XX		Total Depth of 15 ft. or Refusal	Yes				1		1					
DSB- 9	15	Surface soil		1	DSB-9-0.0-0.5		0.0 - 0.5	Yes				1		1					
				1	DSB-9-0.5-2.0		0.5 - 2.0	Yes				1		1					
		Subsurface soil		1	DSB-9-XX-XX		Total Depth of 15 ft. or Refusal	Yes				1		1					
DSB- 10	15	Surface soil		1	DSB-10-0.0-0.5		0.0 - 0.5	Yes				1		1					
				1	DSB-10-0.5-2.0		0.5 - 2.0	Yes				1		1					
		Subsurface soil		1	DSB-10-XX-XX		Total Depth of 15 ft. or Refusal	Yes				1		1					
DSB- 11	15	Surface soil		1	DSB-11-0.0-0.5		0.0 - 0.5	Yes				1		1					
				1	DSB-11-0.5-2.0		0.5 - 2.0	Yes				1		1					
		Subsurface soil		1	DSB-11-XX-XX		Total Depth of 15 ft. or Refusal	Yes				1		1					
DSB- 12	15	Surface soil		1	DSB-12-0.0-0.5		0.0 - 0.5	Yes				1		1					
				1	DSB-12-0.5-2.0		0.5 - 2.0	Yes				1		1					
		Subsurface soil		1	DSB-12-XX-XX		Total Depth of 15 ft. or Refusal	Yes				1		1					
JSB- 1	15	Surface soil	To further assess potential source areas	1	JSB-1-0.0-0.5		0.0 - 0.5	Yes				1		1					
				1	JSB-1-0.5-2.0		0.5 - 2.0	Yes				1		1					
		Subsurface soil		1	JSB-1-XX-XX		Total Depth of 15 ft. or Refusal	Yes				1		1					
JSB- 2	15	Surface soil		1	JSB-2-0.0-0.5		0.0 - 0.5	Yes				1		1					
				1	JSB-2-0.5-2.0		0.5 - 2.0	Yes				1		1					
		Subsurface soil		1	JSB-2-XX-XX		Total Depth of 15 ft. or Refusal	Yes		1	1	1	1	1	1	1	1	1	1
JSB- 3	15	Surface soil		1	JSB-3-0.0-0.5		0.0 - 0.5	Yes				1		1					
				1	JSB-3-0.5-2.0		0.5 - 2.0	Yes				1		1					
		Subsurface soil		1	JSB-3-XX-XX		Total Depth of 15 ft. or Refusal	Yes				1		1					
JSB- 4	15	Surface soil		1	JSB-4-0.0-0.5		0.0 - 0.5	Yes				1		1					
				1	JSB-4-0.5-2.0		0.5 - 2.0	Yes				1		1					
		Subsurface soil		1	JSB-4-XX-XX		Total Depth of 15 ft. or Refusal	Yes				1		1					
							Subtotal Soil Boring Soil Samples		**0**	**4**	**4**	**48**	**4**	**48**	**4**	**4**	**4**	**4**	**4**

Table A-2: Sampling Design Matrix - Phase 1
Soil Sampling

Sample Location	Boring Total Depth (ft bgs)	Sample Medium	Rationale	Number of Sample Locations	Sample Identification	Sampling Tool	Sampling Depth (ft bgs)	Analysis: Field Screening by PID	[2,3]Geotechnical Parameters	VOCs	SVOCs	TAL Metals (includes Mercury)	[2]Cyanide	[2]Hexavalent Chromium	PCBs	[2]PFCS	[2]ORP	[2]pH	[2]TPH
Monitoring Wells																			
MW- 1	40	Surface soil	To assess nature and extent	1	MW-1-0.0-0.5	Hollow stem auger with 5 ft core barrel	0.0 - 0.5	Yes				1		1					
				1	MW-1-0.5-2.0		0.5 - 2.0	Yes				1		1					
		Subsurface soil		1	MW-1-XX-XX		[1]Highest PID Reading/Apparent Ground Water Interface	Yes		1	1	1	1	1	1	1	1	1	1
		Subsurface soil (core)		1	MW-1-XX-XX	Shelby Tube			1										
MW- 2	40	Surface soil		1	MW-2-0.0-0.5	Hollow stem auger with 5 ft core barrel	0.0 - 0.5	Yes				1		1					
				1	MW-2-0.5-2.0		0.5 - 2.0	Yes				1		1					
		Subsurface soil		1	MW-2-XX-XX		[1]Highest PID Reading/Apparent Ground Water Interface	Yes		1	1	1	1	1	1	1	1	1	1
		Subsurface soil (core)		1	MW-2-XX-XX	Shelby Tube			1										
MW- 3	40	Surface soil		1	MW-3-0.0-0.5	Hollow stem auger with 5 ft core barrel	0.0 - 0.5	Yes				1		1					
				1	MW-3-0.5-2.0		0.5 - 2.0	Yes				1		1					
		Subsurface soil		1	MW-3-XX-XX		[1]Highest PID Reading/Apparent Ground Water Interface	Yes				1		1					
		Subsurface soil (core)		1	MW-3-XX-XX	Shelby Tube			1										
Subtotal Monitoring Well Soil Samples									**3**	**2**	**2**	**9**	**2**	**9**	**2**	**2**	**2**	**2**	**2**
Total Soil Samples									**3**	**6**	**6**	**57**	**6**	**57**	**6**	**6**	**6**	**6**	**6**
Soil Investigation QC Samples																			
Field Duplicates	NA	Soil	Quality Control	Same as original with "-D" added to the ID, for example MW-16-0.5-2.0-D		1 per 10 samples			0	1	1	6	1	6	1	1	1	1	1
MS/MSDs	NA	Soil		Same as original sample identification		1 per 20 samples (extra volume consisting of one container for MS and one container for MSD per each MS/MSD sample)			0	1	1	3	1	3	1	1	1	1	1
Total Soil Samples Associated with Soil Investigation Including QC									**3**	**8**	**8**	**66**	**8**	**66**	**8**	**8**	**8**	**8**	**8**
Water QC Samples																			
Trip blanks	NA	Water	Quality Control	TB with number; for example TB-1, TB-2, etc.		1 per cooler containing equipment rinsate for equipment used during soil investigation			0	6	0	0	0	0	0	0	0	0	0
Equipment blanks	NA	Water		ER with number; for example ER-1, ER-2, etc.		1 per day per set of nondedicated equipment per team			0	4	4	10	4	10	4	4	4	4	4
Total Water QC Samples Associated with Soil Investigation									**0**	**10**	**4**	**10**	**4**	**10**	**4**	**4**	**4**	**4**	**4**

NOTES:
[1]Interval that contains the highest PID reading will be determined in the field; these intervals will used accordingly the sample indentifcation number for the collected samples meeting these criteria
Sample depth may vary depending upon location of sample and encountered condtions; in addition the highest PID reading may correspond with one of the surface soil intervals or the ground water interface, as a result, the number of samples collected may be less than shown.
[2] Geotechnical parameters, cyanide, hexavalent chromium, PFCs, pH , ORP, and TPH analyses for soil samples will be conducted by a private laboratory.
[3]Geotechnical parameters include bulk density, porosity, effective porosity, fraction organic carbon, and permeability.

bgs = Below ground surface
ft = foot (feet)
MS = Matrix spike
MSD = Matrix spike duplicate
NA = Not Applicable
ORP = Oxidation Reduction Potential
PCB = Polychlorinated biphenyl
PFCs = Perfluorochemicals
PID = Photoionization detector
PVC = polyvinyl chloride
QC = Quality control
SVOC = Semivolatile organic compound
TAL = Target Analyte List
TPH = Total petroleum hydrocarbons
TB = Trip Blank
TPH = Total petroleum hydrocarbons
VOC = Volatile organic compound

Objective of Sampling - To determine the nature and extent of contaminants of potential concern associated with surface and subsurface soil.
Activities to be Conducted - The tasks of this field investigation that will be performed during Phase 1 include: (1) Installation of soil borings and monitoring wells, and (2) collection of surface and subsurface soil samples for laboratory analyses.
Sample Locations - See Figure A-1 for soil boring locations and A-2 for monitoring well locations in Appendix A of the Sampling and Analysis Plan

N

0 100 200
Feet

Legend

- Phase I RI Sediment Sample Location
- Previous Sediment Sample Location
- Stream
- Stream Seasonal
- Approximate Site Boundary

Wetlands

- Freshwater Emergent Wetland
- Freshwater Forested /Shrub Wetland
- Freshwater Pond
- Lake
- Riverine

Imagery Source:
Texas Orthoimagery
Program 2015 0.5 Meter DOQQ,
Texas Strategic Mapping Program, 2015.

Lane Plating Works, Inc. Superfund Site
Dallas, Dallas County, Texas

Figure A-3
Phase 1 Remedial Investigation
Sediment Sample Locations

Table A-3: Sampling Design Matrix - Phase 1
Sediment Sampling

Sample Location	Boring Total Depth (ft bgs)	Sample Medium	Rationale	Number of Sample Locations	Sample Identification	Sampling Tool	Sampling Depth (ft bgs)	Analysis: Field Screening by PID	VOCs	SVOCs	TAL Metals (includes Mercury)	[1]Cyanide	[1]Hexavalent Chromium	PCBs	[1]AVS/SEM	[1]PFCs	[1]ORP	[1]pH	[1]TOC	[1]TPH
Sediment Samples																				
LSED- 1	0.5	Sediment	To assess delineate nature and extent	1	LSED-1-0.0-0.5	Core sampler or scoop	0.0 - 0.5	Yes	1	1	1	1	1	1	1	1	1	1	1	1
LSED- 2	0.5	Sediment		1	LSED-2-0.0-0.5		0.0 - 0.5	Yes			1		1							
LSED- 3	0.5	Sediment		1	LSED-3-0.0-0.5		0.0 - 0.5	Yes			1		1							
LSED- 4	0.5	Sediment		1	LSED-4-0.0-0.5		0.0 - 0.5	Yes			1		1							
LSED- 5	0.5	Sediment		1	LSED-5-0.0-0.5		0.0 - 0.5	Yes			1		1							
LSED- 6	0.5	Sediment		1	LSED-6-0.0-0.5		0.0 - 0.5	Yes			1		1							
LSED- 7	0.5	Sediment		1	LSED-7-0.0-0.5		0.0 - 0.5	Yes			1		1							
LSED- 8	0.5	Sediment		1	LSED-8-0.0-0.5		0.0 - 0.5	Yes			1		1							
LSED- 9	0.5	Sediment		1	LSED-9-0.0-0.5		0.0 - 0.5	Yes	1	1	1	1	1	1	1	1	1	1	1	1
LSED- 10	0.5	Sediment		1	LSED-10-0.0-0.5		0.0 - 0.5	Yes			1		1							
LSED- 11	0.5	Sediment		1	LSED-11-0.0-0.5		0.0 - 0.5	Yes			1		1							
LSED- 12	0.5	Sediment		1	LSED-12-0.0-0.5		0.0 - 0.5	Yes			1		1							
LSED- 13	0.5	Sediment		1	LSED-13-0.0-0.5		0.0 - 0.5	Yes			1		1							
LSED- 14	0.5	Sediment		1	LSED-14-0.0-0.5		0.0 - 0.5	Yes			1		1							
LSED- 15	0.5	Sediment		1	LSED-15-0.0-0.5		0.0 - 0.5	Yes			1		1							
LSED- 16	0.5	Sediment		1	LSED-16-0.0-0.5		0.0 - 0.5	Yes			1		1							
LSED- 17	0.5	Sediment		1	LSED-17-0.0-0.5		0.0 - 0.5	Yes			1		1							
LSED- 18	0.5	Sediment		1	LSED-18-0.0-0.5		0.0 - 0.5	Yes			1		1							
LSED- 19	0.5	Sediment		1	LSED-19-0.0-0.5		0.0 - 0.5	Yes			1		1							
LSED- 20	0.5	Sediment		1	LSED-20-0.0-0.5		0.0 - 0.5	Yes			1		1							
								Total Sediment Samples	**2**	**2**	**20**	**2**	**20**	**2**	**2**	**2**	**2**	**2**	**2**	**2**
Sediment Investigation QC Samples																				
Field Duplicates	NA	Sediment	Quality Control	Same as original with "-D" added to the ID, for example MW-16-0.5-2.0-D		1 per 10 samples		0	1	1	2	1	2	1	1	1	1	1	1	1
MS/MSDs	NA	Sediment		Same as original sample identification		1 per 20 samples (extra volume consisting of one container for MS and one container for MSD per each MS/MSD sample)		0	1	1	1	1	1	1	1	1	1	1	1	1
								Total Sediment Samples Associated with Soil Investigation Including QC	**4**	**4**	**23**	**4**	**23**	**4**	**4**	**4**	**4**	**4**	**4**	**4**
Water QC Samples																				
Trip blanks	NA	Water	Quality Control	TB with number; for example TB-1, TB-2, etc.		1 per cooler containing equipment rinsate for equipment used during soil investigation		0	2	0	0	0	0	0	0	0	0	0	0	0
Equipment blanks	NA	Water		ER with number; for example ER-1, ER-2, etc.		1 per day per set of nondedicated equipment per team		0	0	0	0	0	0	0	0	2	0	0	0	0
								Total Water QC Samples Associated with Sediment Investigation	**2**	**0**	**0**	**0**	**0**	**0**	**0**	**2**	**0**	**0**	**0**	**0**

NOTES:

[1] Cyanide, hexavalent chromium, AVS/SEM, PFCs, pH and ORP, and TPH analyses for sediment samples will be conducted by a private laboratory.

AVS/SEM = Acid volatile sulfide/simultaneously extracted metals
bgs = Below ground surface
ft = foot (feet)
MS = Matrix spike
MSD = Matrix spike duplicate
NA = Not Applicable
ORP = Oxidation reduction potential
PCB = Polychlorinated biphenyls
PFCs = Perfluorochemicals
PID = Photoionization detector
QC = Quality control
SVOC = Semivolatile organic compound
TAL = Target Analyte List
TB = Trip Blank
TPH = Total petroleum hydrocarbons
VOC = Volatile organic compound

Objective of Sampling - To determine potential points of entry of sediment entering the nearby drainge systems from the site, and to determine the nature and extent of contaminants of potential concern associated with sediment.

Activities to be Conducted - The tasks of this field investigation that will be performed during Phase 1 include collection of sediment samples for laboratory analyses.

Sample Locations - See Figure A-3 in Appendix A of the Sampling and Analysis Plan

N

0 100 200
Feet

Legend

- Phase I RI Surface Water Sample Location
- Previous Surface Water Sample Location
- Stream
- Stream Seasonal
- Approximate Site Boundary

Wetlands

- Freshwater Emergent Wetland
- Freshwater Forested /Shrub Wetland
- Freshwater Pond
- Lake
- Riverine

Imagery Source:
Texas Orthoimagery
Program 2015 0.5 Meter DOQQ,
Texas Strategic Mapping Program, 2015.

Lane Plating Works, Inc. Superfund Site
Dallas, Dallas County, Texas

Figure A-4
Phase 1 Remedial Investigation
Surface Water Sample Locations

Table A-4: Sampling Design Matrix - Phase 1
Surface Water Sampling

Sample Location	Sample Medium	Number of Sample Locations	Sample Identification	Sampling Tool	Sampling Depth [1]	Analyses for Surface Water Samples														
						Field Parameters	VOCs (low water)	SVOCs	Total (Unfiltered) TAL Metals (includes Mercury)	Dissolved (Filtered) TAL Metals (includes Mercury)	[2]Cyanide	Hexavalent Chromium	PCBs	[2]PFCs	[2]TPH	[2]Hardness	[2]Total Dissolved Solids	[2]Total Suspended Solids	[2]Alkalinity	[2]Total Organic Carbon
Surface Water Samples																				
LSW- 1	Surface water at Sediment Sample Location	1	LSW-1	Peristaltic pump or disposable scoop	0.0 - 1.0 or shallower	1	1	1	1	1	1	1	1	1	1	1	1	1	1	1
LSW- 2	Surface water at Sediment Sample Location	1	LSW-2	Peristaltic pump or disposable scoop	0.0 - 1.0 or shallower	1			1	1		1								
LSW- 3	Surface water at Sediment Sample Location	1	LSW-3	Peristaltic pump or disposable scoop	0.0 - 1.0 or shallower	1			1	1		1								
LSW- 4	Surface water at Sediment Sample Location	1	LSW-4	Peristaltic pump or disposable scoop	0.0 - 1.0 or shallower	1			1	1		1								
LSW- 5	Surface water at Sediment Sample Location	1	LSW-5	Peristaltic pump or disposable scoop	0.0 - 1.0 or shallower	1			1	1		1								
LSW- 6	Surface water at Sediment Sample Location	1	LSW-6	Peristaltic pump or disposable scoop	0.0 - 1.0 or shallower	1			1	1		1								
LSW- 7	Surface water at Sediment Sample Location	1	LSW-7	Peristaltic pump or disposable scoop	0.0 - 1.0 or shallower	1			1	1		1								
LSW- 8	Surface water at Sediment Sample Location	1	LSW-8	Peristaltic pump or disposable scoop	0.0 - 1.0 or shallower	1			1	1		1								
LSW- 9	Surface water at Sediment Sample Location	1	LSW-9	Peristaltic pump or disposable scoop	0.0 - 1.0 or shallower	1	1	1	1	1	1	1	1	1	1	1	1	1	1	1
LSW- 10	Surface water at Sediment Sample Location	1	LSW-10	Peristaltic pump or disposable scoop	0.0 - 1.0 or shallower	1			1	1		1								
LSW- 11	Surface water at Sediment Sample Location	1	LSW-11	Peristaltic pump or disposable scoop	0.0 - 1.0 or shallower	1			1	1		1								
LSW- 12	Surface water at Sediment Sample Location	1	LSW-12	Peristaltic pump or disposable scoop	0.0 - 1.0 or shallower	1			1	1		1								
LSW- 13	Surface water at Sediment Sample Location	1	LSW-13	Peristaltic pump or disposable scoop	0.0 - 1.0 or shallower	1			1	1		1								
LSW- 14	Surface water at Sediment Sample Location	1	LSW-14	Peristaltic pump or disposable scoop	0.0 - 1.0 or shallower	1			1	1		1								
LSW- 15	Surface water at Sediment Sample Location	1	LSW-15	Peristaltic pump or disposable scoop	0.0 - 1.0 or shallower	1			1	1		1								
LSW- 16	Surface water at Sediment Sample Location	1	LSW-16	Peristaltic pump or disposable scoop	0.0 - 1.0 or shallower	1			1	1		1								
LSW- 17	Surface water at Sediment Sample Location	1	LSW-17	Peristaltic pump or disposable scoop	0.0 - 1.0 or shallower	1			1	1		1								

Table A-4: Sampling Design Matrix - Phase 1
Surface Water Sampling

Sample Location	Sample Medium	Number of Sample Locations	Sample Identification	Sampling Tool	Sampling Depth [1]	Analyses for Surface Water Samples														
						Field Parameters	VOCs (low water)	SVOCs	Total (Unfiltered) TAL Metals (includes Mercury)	Dissolved (Filtered) TAL Metals (includes Mercury)	[2]Cyanide	Hexavalent Chromium	PCBs	[2]PFCs	[2]TPH	[2]Hardness	[2]Total Dissolved Solids	[2]Total Suspended Solids	[2]Alkalinity	[2]Total Organic Carbon
LSW- 18	Surface water at Sediment Sample Location	1	LSW-18	Peristaltic pump or disposable scoop	0.0 - 1.0 or shallower	1			1	1		1								
LSW- 19	Surface water at Sediment Sample Location	1	LSW-19	Peristaltic pump or disposable scoop	0.0 - 1.0 or shallower	1			1	1		1								
LSW- 20	Surface water at Sediment Sample Location	1	LSW-20	Peristaltic pump or disposable scoop	0.0 - 1.0 or shallower	1			1	1		1								
					Total Surface Water Samples	**20**	**2**	**2**	**20**	**20**	**2**	**20**	**2**	**2**	**2**	**2**	**2**	**2**	**2**	**2**
Water QC Samples																				
Field duplicates	Surface Water	Same as original with "-D" added to the ID, for example SW-7-D		1 per 10 samples		0	1	1	2	2	1	2	1	1	1	1	1	1	1	1
MS/MSDs	Surface Water	Same as original sample identification		1 per 20 samples (extra volume consisting of one container for MS and one container for MSD per each MS/MSD sample)		0	1	1	1	1	1	1	1	1	1	1	1	1	1	1
Trip blanks	Water	TB with number; for example TB-1, TB-2, etc.		1 per cooler containing aqueous samples for VOC analysis		0	2	0	0	0	0	0	0	0	0	0	0	0	0	0
Equipment blanks	Water	ER with number; for example ER-1, ER-2, etc.		1 per day per set of for nondedicated equipment per team		0	0	0	0	0	0	0	0	2	0	0	0	0	0	0
					Total Samples Including QC Samples	**20**	**6**	**4**	**23**	**23**	**4**	**23**	**4**	**6**	**4**	**4**	**4**	**4**	**4**	**4**

NOTES:

[1] Feet below water surface for surface water samples

[2] Cyanide, hexavalent chromium, PFCs, hardness, total dissolved solids, total suspended solids, alkalinity, total organic carbon, and TPH analyses for surface water samples will be conducted by a private laboratory.

Analyses for hexavalent chromium may be eliminated if it is not detected in soil or ground water samples.

Field parameters for surface water are pH, temperature, and conductivity, dissolved oxygen, and oxidation reduction potential.

MS = Matrix spike
MSD = Matrix spike duplicate
PCB = Polychlorinated biphenyls
PFCs = Perfluorochemicals
TPH = Total petroleum hydrocarbons
VOCs = Volatile organic compounds

Objective of Sampling - To determine points of entry from the site to the nearby drainge systems, and determine the nature and extent of contaminants of potential concern associated with surface water in these asjacent drainge systems.

Activities to be Conducted - The tasks of this field investigation that will be performed during Phase 1 include collection of surface water samples for laboratory analyses.

Sample Locations - See Figure A-4 in Appendix A pf the Sampling and Analysis Plan

Table A-5: Sample Design Matrix
Investigation-Derived Waste Sampling

Sample Location	Sample Identification	Sampling Method	TCLP Metals	TCLP VOCs	TCLP SVOCs	TCLP Metals	TCLP Pesticides	TCLP Herbicides	Total Petroleum Hydrocarbons	Reactivity	Corrosivity	Ignitability
Investigation Derived Waste Samples - Water												
IDW (drummed water)	IDW-W - YYMMDD	Composite sample from drummed water	1	1	1	1	1	1	1	1	1	1
IDW (drummed water)	IDW-W - YYMMDD	Composite sample from drummed water	1	1	1	1	1	1	1	1	1	1
		Subtotal IDW Sampling Event - Water	**2**	**2**	**2**	**2**	**2**	**2**	**2**	**2**	**2**	**2**
Investigation Derived Waste Samples - Soil Cuttings												
IDW (drummed soil cuttings)	IDW-S- - YYMMDD	Composite sample from soil cuttings	1	1	1	1	1	1	1	1	1	1
IDW (drummed soil cuttings)	IDW-S- - YYMMDD	Composite sample from soil cuttings	1	1	1	1	1	1	1	1	1	1
		Subtotal IDW Sampling Event - Soil Cuttings	**2**	**2**	**2**	**2**	**2**	**2**	**2**	**2**	**2**	**2**
		Total IDW Samples	**4**	**4**	**4**	**4**	**4**	**4**	**4**	**4**	**4**	**4**
QC Samples (Not Applicable)												
Field duplicate	Same as original with "-D" added to the ID, for example MW-16-D	1 per 10 samples	0	0	0	0	0	0	0	0	0	0
MS/MSDs	Same as original sample identification	1 per 20 samples (extra volume only; not included in total sample count)	0	0	0	0	0	0	0	0	0	0
Trip blanks	TB with number; for example TB-1, TB-2, etc.	1 per cooler containing aqueous samples for VOC analysis	0	0	0	0	0	0	0	0	0	0
Equipment blanks	ER with number; for example ER-1, ER-2, etc.	1 per day per set of for nondedicated equipment per team	0	0	0	0	0	0	0	0	0	0
Total IDW Samples Including QC			**4**	**4**	**4**	**4**	**4**	**4**	**4**	**4**	**4**	**4**

NOTES:
Objective of Sampling: To sample investigation-derived waste for waste characterization purposes.
Activities to be Conducted: Sampling of drummed purge and decontamination water as well as soil cuttings generated during new monitoring well installation.
Sample Locations: Designated onsite investigation-derived waste staging area.
IDW = Investigation-derived waste.
MS = Matrix spike.
MSD = Matrix spike duplicate.
QC = Quality control.
S = Soil (for soil cuttings sample).
SVOCs = Semivolatile organic compounds.
TCLP = Toxicity Characteristic Leaching Procedure.
VOCs = Volatile organic compounds.
W = Water (for aqueous sample).

Appendix B

EPA Contract Laboratory Program Contract Required Quantitation Limits

EPA CONTRACT LABORATORY PROGRAM

STATEMENT OF WORK

FOR

INORGANIC SUPERFUND METHODS

Multi-Media, Multi-Concentration

ISM02.4
October 2016

STATEMENT OF WORK

TABLE OF CONTENTS

INORGANIC ABBREVIATIONS/ACRONYM LIST

EXHIBIT A: SUMMARY OF REQUIREMENTS

EXHIBIT B: REPORTING AND DELIVERABLES REQUIREMENTS

EXHIBIT C: INORGANIC TARGET ANALYTE LIST AND CONTRACT REQUIRED QUANTITATION LIMITS

EXHIBIT D: INTRODUCTION TO INORGANIC ANALYTICAL METHODS

EXHIBIT D: GENERAL INORGANIC ANALYSIS

EXHIBIT D: INDUCTIVELY COUPLED PLASMA - ATOMIC EMISSION SPECTROSCOPY

EXHIBIT D: INDUCTIVELY COUPLED PLASMA - MASS SPECTROMETRY

EXHIBIT D: COLD VAPOR MERCURY ANALYSIS

EXHIBIT D: TOTAL CYANIDE ANALYSIS

EXHIBIT E: QUALITY SYSTEMS

EXHIBIT F: PROGRAMMATIC QUALITY ASSURANCE/QUALITY CONTROL ELEMENTS

EXHIBIT G: GLOSSARY OF TERMS

EXHIBIT H: FORMAT FOR ELECTRONIC DATA DELIVERABLES

INORGANIC ABBREVIATIONS/ACRONYM LIST	
ABBREVIATION/ACRONYM	DEFINITION
AA	Atomic Absorption
ASB	Analytical Services Branch
ASB CLP COR	Analytical Services Branch Contract Laboratory Program Contracting Officer's Representative
°C	Degrees Celsius (unit of measurement)
CAS	Chemical Abstracts Service
CCB	Continuing Calibration Blank
CCS	Contract Compliance Screening
CCV	Continuing Calibration Verification
CERCLA	Comprehensive Environmental Response, Compensation, and Liability Act of 1980
CFR	Code of Federal Regulations
CLP	EPA Contract Laboratory Program
CO	Contracting Officer
COC	Chain of Custody
COR	Contracting Officer's Representative
CRQL	Contract Required Quantitation Limit
CSF	Complete SDG File
CVAA	Cold Vapor Atomic Absorption Spectroscopy
%D	Percent Difference
DF	Dilution Factor
DRD	Data Receipt Date
DTD	Document Type Definition
Dup	Duplicate Sample
EDD	Electronic Data Deliverable
EPA	United States Environmental Protection Agency
EXES	Electronic Data Exchange and Evaluation System
FCC	Federal Communications Commission
FEP	Fluorinated Ethylene Propylene
g	Gram (unit of measurement)
HRS	Hazard Ranking System
ICAL	Initial Calibration
ICB	Initial Calibration Blank
ICP	Inductively Coupled Plasma
ICP-AES	Inductively Coupled Plasma - Atomic Emission Spectrometer or Inductively Coupled Plasma - Atomic Emission Spectroscopy
ICP-MS	Inductively Coupled Plasma - Mass Spectrometer or Inductively Coupled Plasma - Mass Spectrometry
ICS	Interference Check Sample
ICSA	Interference Check Sample Solution A
ICSAB	Interference Check Sample Solution AB
ID	Identifier
IEC	Interelement Correction
ICV	Initial Calibration Verification
IPC	Instrument Performance Check
IR	Infrared
kg	Kilogram (unit of measurement)
L	Liter (unit of measurement)
Lab	Laboratory
LCS	Laboratory Control Sample
LEB	Leachate Extraction Blank
LRD	Laboratory Receipt Date

ED_004144A_00000101-00092

INORGANIC ABBREVIATIONS/ACRONYM LIST	
ABBREVIATION/ACRONYM	DEFINITION
MA	Modified Analysis
MDL	Method Detection Limit
mg	Milligram (unit of measurement)
mL	Milliliter (unit of measurement)
mm	Millimeter (unit of measurement)
MS	Matrix Spike
MSDS	Material Safety Data Sheet
NCS	Non-Client Sample
NERL	National Exposure Research Laboratory
NIST	National Institute of Standards and Technology
nm	Nanometer (unit of measurement)
NSCEP	National Service Center for Environmental Publications
OSHA	Occupational Safety and Health Administration
OSRTI	EPA Office of Superfund Remediation and Technology Innovation
PB	Preparation Blank
PDF	Portable Document Format
PDS	Post-Digestion/Distillation Spike
PE	Performance Evaluation
PRPs	Potentially Responsible Parties
PT	Proficiency Testing
PTFE	Polytetrafluoroethylene
QA	Quality Assurance
QAPP	Quality Assurance Project Plan
QATS	Quality Assurance Technical Support
QC	Quality Control
QMP	Quality Management Plan
%R	Percent Recovery
%RSD	Percent Relative Standard Deviation
RPD	Relative Percent Difference
%S	Percent Solids
SA	Spike Added
SARA	Superfund Amendments and Reauthorization Act of 1986
SD	Serial Dilution
SD	Standard Deviation
SDG	Sample Delivery Group
SEDD	Staged Electronic Data Deliverable
SMO	Sample Management Office
SOP	Standard Operating Procedure
SOW	Statement of Work
SPLP	Synthetic Precipitation Leaching Procedure
SR	Sample Result
SSR	Spiked Sample Result
TAL	Target Analyte List
TCLP	Toxicity Characteristic Leaching Procedure
TR	Traffic Report
TR/COC	Traffic Report/Chain of Custody
µg	Microgram (unit of measurement)
UTF-8	Unicode Transformation Format - 8 bit
VTSR	Validated Time of Sample Receipt
W3C	World Wide Web Consortium
XML	eXtensible Markup Language

ED_004144A_00000101-00093

EXHIBIT A

SUMMARY OF REQUIREMENTS

ED_004144A_00000101-00094

THIS PAGE INTENTIONALLY LEFT BLANK

ED_004144A_00000101-00095

Exhibit A - Summary of Requirements

Table of Contents

Section		Page
1.0	PURPOSE	5
2.0	DESCRIPTION OF SERVICE	5
3.0	DATA USES	5
4.0	SUMMARY OF REQUIREMENTS	5
4.1	Major Task Areas	6
5.0	SAMPLE RECEIPT AND HANDLING	7
5.1	Chain of Custody	7
5.2	Sample Scheduling	8
5.3	Sample Shipments	8
5.4	Sample Receipt	8
5.5	Sample Case	10

ED_004144A_00000101-00096

THIS PAGE INTENTIONALLY LEFT BLANK

ED_004144A_00000101-00097

1.0 PURPOSE

The purpose of this analytical service is to provide analytical data for use by the U.S. Environmental Protection Agency (EPA), in support of the investigation and clean-up activities under the Comprehensive Environmental Response, Compensation, and Liability Act of 1980 (CERCLA) and the Superfund Amendments and Reauthorization Act of 1986 (SARA). Other EPA Program Offices, as well as customers outside the Agency, that have similar analytical data needs also use this service.

2.0 DESCRIPTION OF SERVICE

This Statement of Work (SOW) provides a contractual framework for laboratories to perform analytical services. This framework applies EPA Contract Laboratory Program (CLP) analytical methods for the isolation, detection, and quantitative measurement of 23 metals and cyanide in aqueous/water and soil/sediment samples, and total metals analysis in wipes. The SOW also includes Toxicity Characteristic Leaching Procedure (TCLP) and Synthetic Precipitation Leaching Procedure (SPLP) leachate extraction procedures. The analytical service contract provides the methods to be used and the specific contractual requirements by which the EPA will evaluate the data.

3.0 DATA USES

This analytical service provides data used for a variety of purposes, such as: determining the nature and extent of contamination at a hazardous waste site, assessing priorities for response based on risks to human health and the environment, determining appropriate clean-up actions, and determining when remedial actions are complete. The data may be used in all stages in the investigation of hazardous waste sites, including site inspections, Hazard Ranking System (HRS) scoring, remedial investigation/feasibility studies, remedial design, treatability studies, and removal actions.

In addition, the Contractor must be aware of the importance of maintaining the integrity of data generated under the contract, since it is used to make major decisions regarding public health and environmental welfare. The data may also be used in litigation against Potentially Responsible Parties (PRPs) in the enforcement of Superfund legislation.

4.0 SUMMARY OF REQUIREMENTS

The SOW is comprised of eight exhibits:

- Exhibit A - Summary of Requirements
- Exhibit B - Reporting and Deliverables Requirements
- Exhibit C - Inorganic Target Analyte List and Contract Required Quantitation Limits
- Exhibit D - Analytical Methods
- Exhibit E - Quality Systems
- Exhibit F - Programmatic Quality Assurance/Quality Control Elements
- Exhibit G - Glossary of Terms
- Exhibit H - Format for Electronic Data Deliverables

ED_004144A_00000101-00098

4.1 Major Task Areas

For each sample, the Contractor shall perform the tasks described in each section. Specific requirements for each task are detailed in the exhibits referenced.

4.1.1 Sample Receiving, Storage, and Disposal

The Contractor will receive samples from potential hazardous waste sites and shall store and maintain these samples under proper chain of custody (COC) procedures. The Contractor shall follow procedures outlined in Section 5.0 of this Exhibit for proper sample receipt and handling as well as each Exhibit D - Analytical Methods for proper storage and disposal of unused portion of samples. All anomalies and identified issues shall be communicated to the EPA via the CLP Sample Management Office (SMO) Contractor.

4.1.2 Sample Preparation and Analysis

The Contractor is advised that the samples received under this contract are usually from known or suspected hazardous waste sites and may contain high levels of organic and inorganic materials of a potentially hazardous nature and of unknown structure and concentration, and should be handled throughout the analysis with appropriate caution. It is the Contractor's responsibility to take all necessary measures to ensure laboratory safety.

4.1.2.1 The Contractor shall prepare samples as described in the respective Exhibit D - Analytical Methods for the requested analysis type. Sample preparation methods shall remain consistent for all samples analyzed within a Sample Delivery Group (SDG).

4.1.3 Sample Reporting and Resubmission of Data

4.1.3.1 Required formats for the reporting of data are found in Exhibit B - Reporting and Deliverables Requirements and Exhibit H - Format for Electronic Data Deliverables. The Contractor shall be responsible for completing and submitting analysis data sheets and electronic data as requested in a format specified in this SOW and within the time specified in Exhibit B - Reporting and Deliverables Requirements, Section 1.1.

4.1.3.2 Use of formats other than those approved will be deemed as noncompliant. Such data are unacceptable. Resubmission in the specified format will be required at no additional cost to the Government.

4.1.4 Quality Assurance/Quality Control

The Contractor shall maintain a Quality Assurance Project Plan (QAPP) with the objective of providing sound analytical chemical measurements. This program shall incorporate the Quality Control (QC) procedures, any necessary corrective action, and all documentation required during data collection, as well as the Quality Assurance (QA) measures performed by management to ensure acceptable data production.

ED_004144A_00000101-00099

4.1.4.1 The Contractor shall strictly adhere to all specific QA/QC procedures prescribed in Exhibits D - Analytical Methods and F - Programmatic Quality Assurance/Quality Control Elements. Records documenting the use of the protocol shall be maintained in accordance with the document control procedures prescribed in Exhibit E - Quality Systems, and shall be reported in accordance with Exhibit B - Reporting and Deliverables Requirements and Exhibit H - Format for Electronic Data Deliverables.

4.1.4.2 Additional QC shall be conducted in the form of the analysis of Performance Evaluation (PE) samples submitted to the laboratory by the EPA. Unacceptable results of all such QC or PE samples may be used as the basis for an equitable adjustment to reflect the reduced value of the data to the EPA or rejection of the data for specific analyte(s) within an SDG or the entire SDG. Also, unacceptable results may be used as the basis for contract action. "Compliant performance" is defined as that which yields correct analyte identification and concentration values as determined by the EPA, as well as meeting the contract requirements for analysis (Exhibit D - Analytical Methods); QA/QC (Exhibit F - Programmatic Quality Assurance/Quality Control Elements); data reporting and other deliverables (Exhibits B - Reporting and Deliverables Requirements and H - Format for Electronic Data Deliverables); and sample custody, sample documentation, and Standard Operating Procedure (SOP) documentation (Exhibit E - Quality Systems). As an alternative to data rejection, the EPA may require reanalysis of noncompliant samples. Reanalysis will be performed by the Contractor at no additional cost to the EPA.

4.1.5 Modified Analysis

The Contractor may be requested by the EPA to perform a Modified Analysis (MA). The modifications may include, but are not limited to: modified preparation or analysis procedures; additional analytes; sample matrices other than those present in the SOW; and/or lower quantitation limits. The requests will be made in writing, prior to sample scheduling. All contract requirements specified in the SOW/Specifications will remain in effect unless specifically modified.

5.0 SAMPLE RECEIPT AND HANDLING

5.1 Chain of Custody

The Contractor shall receive and maintain samples under proper COC procedures. All associated document control and inventory procedures shall be developed and followed. Documentation described herein shall be required to show that all procedures are strictly followed. This documentation shall be reported as the Complete SDG File (CSF) (See Exhibit B - Reporting and Deliverables Requirements). The Contractor shall establish and use appropriate procedures to handle confidential information received from the EPA.

ED_004144A_00000101-00100

5.2 Sample Scheduling

5.2.1 Sample shipments to the Contractor's facility will be scheduled and coordinated by the CLP SMO. The EPA may request analyses that include all or a subset of the Target Analytes listed in Exhibit C - Inorganic Target Analyte List and Contract Required Quantitation Limits. The EPA may also request modified analyses due to the nature of the samples or project requirements. The Contractor shall communicate with SMO personnel as necessary, throughout the process of sample scheduling, shipment, analysis, and data reporting, to ensure that samples are properly processed.

5.2.2 The Contractor shall accept all samples scheduled by SMO, provided that the total number of samples received in any calendar month does not exceed the monthly limitation defined in the contract. Should the Contractor elect to accept additional samples, the Contractor shall remain bound by all contract requirements for analysis of those samples accepted.

5.3 Sample Shipments

5.3.1 Samples will be shipped routinely to the Contractor through an overnight delivery service. However, as necessary, the Contractor shall be responsible for any handling or processing of the receipt of sample shipments. This includes the pick-up of samples at the nearest servicing airport, bus station, or other carrier within the Contractor's geographical area. The Contractor shall be available to receive sample shipments at any time the delivery service is operating, including weekends.

5.3.2 Unless otherwise instructed by the EPA Region or originating sampler, the Contractor shall be required to routinely return sample shipping containers to the appropriate sampling office within 14 calendar days following shipment receipt. This shipment must be done via ground transportation only pending receipt of a valid return authorization, unless specifically instructed to do otherwise. The Contractor will be provided a shipping mechanism by the EPA Region or originating sampler (e.g., field sampler). The Contractor shall ensure that the account numbers provided are used only for the return of Government-owned shipping containers.

5.3.2.1 The Contractor shall remove packing and other materials from the shipping containers before each pick-up and shall ensure that the shipping containers are clean. The Contractor can determine from visual inspection whether the shipping container is clean.

5.4 Sample Receipt

5.4.1 If insufficient sample amount (less than the required amount) is received to perform the analyses, the Contractor shall notify SMO and proceed with the analysis of the sample at reduced volume. The Contractor shall document this issue in the SDG Narrative.

5.4.2 If the Contractor receives broken sample containers, with enough remaining sample to perform sample analysis, but potentially not enough volume to analyze any possible re-extractions/reanalyses, the Contractor shall note the issue in the SDG Narrative, proceed with analysis of the samples, and notify SMO. If re-extraction/ reanalyses are necessary, the Contractor shall contact SMO. The Contractor shall document the provided resolution in the SDG Narrative.

ED_004144A_00000101-00101

5.4.3 If the Contractor encounters other problems with samples or related documentation [e.g., mixed media, sample pH, sample documentation and paperwork such as Traffic Report/Chain of Custody (TR/COC) Records not with shipment, sample and TR/COC Record do not correspond], the Contractor shall immediately contact SMO for resolution.

5.4.4 Shipping Container Temperature Monitoring

5.4.4.1 To monitor the temperature of the sample shipping container more effectively, a sample shipping container temperature indicator bottle may be included with each shipping container shipped. The applicable temperature blank will be clearly labeled.

5.4.4.2 When a shipping container temperature indicator bottle is included in the sample shipping container, the Contractor shall use the supplied shipping container temperature indicator bottle to determine the shipping container temperature. The temperature of the sample shipping container shall be measured and recorded immediately upon opening the shipping container, and prior to unpacking the samples or removing the packing material.

5.4.4.3 To determine the temperature of the shipping container, the Contractor shall locate the shipping container temperature indicator bottle in the sample shipping container, invert it several times, remove the cap, and insert a calibrated [National Institute of Standards and Technology (NIST)-traceable] thermometer into the shipping container temperature indicator bottle. Prior to recording the temperature, the Contractor shall allow a minimum of 3 minutes, but not greater than 5 minutes, for the thermometer to equilibrate with the liquid in the bottle. At a minimum, the thermometer used shall be capable of measuring and registering the temperature of the shipping container with an accuracy of ±1°C.

5.4.4.4 If a temperature indicator bottle is not present in the shipping container, an alternative means of determining shipping container temperature shall be used. Under no circumstances shall a thermometer or any other device be inserted into a sample bottle for the purpose of determining shipping container temperature. Other devices (e.g., infrared thermometer) which can measure temperature may be used if they can be calibrated to ±1°C.

5.4.4.5 If a temperature indicator bottle is not present in the shipping container, and the temperature of the shipping container is not less than or equal to 6°C, the Contractor shall note the issue, and the method used to determine the temperature, in the SDG Narrative and proceed with analysis of the samples. If the temperature exceeds 10°C and the samples are soil/sediment samples for any analytical method or aqueous/water samples for cyanide analysis, the Contractor shall contact SMO and inform them of the temperature deviation. SMO will contact the EPA for instructions on how to proceed. SMO will in turn notify the Contractor of the EPA's decision. The Contractor shall document the EPA's decision and the EPA Sample Numbers of all samples for which temperatures exceeded 10°C in the SDG Narrative.

ED_004144A_00000101-00102

5.4.4.6 Liquid bearing thermometers such as mercury or alcohol thermometers shall be traceable to NIST calibration and verified at least annually, and whenever the thermometer has been exposed to temperature extremes. The correction factor shall be indicated on the thermometer, and the date the thermometer was calibrated and the calibration factor shall be kept as prescribed in the laboratory's QA documents and be available for inspection. The NIST thermometer shall be recalibrated at least every five years or whenever the thermometer has been exposed to temperature extremes.

Digital thermometers, thermocouples, and other similar electronic temperature measuring devices shall be calibrated at least quarterly. The date the thermometer was calibrated and the calibration factor shall be kept as prescribed in the laboratory's QA documents and be available for inspection.

When an infrared (IR) detection device is used to measure the temperature of samples, the device shall be verified at least every six months using an NIST certified thermometer over the full temperature range that the IR thermometer will be used. This would include ambient (20-30°C), iced (4°C), and frozen (0 to -5°C). Each day of use, a single check of the IR shall be made by measuring the temperature of a bottle of water, that contains a calibrated thermometer, at the temperature of interest. Agreement between the two readings should be within 0.5°C, or the device shall be recalibrated. The daily checks of the IR shall be documented and the records maintained on file.

5.4.5 Recording Sample pH

5.4.5.1 The pH for all aqueous/water samples received by the Contractor shall be measured, using a method capable of demonstrating that proper preservation was performed (e.g., pH test strips, electronic hand-held pen, pH meter), and recorded. The pH shall be determined using a small aliquot of the sample to prevent contamination. Under no circumstances shall a strip or any device be inserted into a sample bottle for the purpose of determining pH.

5.4.5.2 All pens and pH meter electrodes shall be rinsed with reagent water between sample readings.

5.5 Sample Case

Sample analyses will be scheduled by groups of samples, each defined as a Case and identified by a unique EPA Case Number assigned by SMO. A Case signifies a group of samples collected at one site or geographical area over a finite time period, and will include one or more field samples with associated blanks. Samples may be shipped to the Contractor in a single shipment or multiple shipments over a period of time, depending on the size of the Case.

5.5.1 A Case consists of one or more SDGs. An SDG is defined by the following, whichever is most frequent:

- Each Case of field samples received; or
- Each 20 samples (excluding PE samples) within a Case; or
- Each 7 calendar day period (3 calendar day period for 7-day turnaround) during which field samples in a Case are received (said period beginning with receipt of the first sample in the SDG).

ED_004144A_00000101-00103

- In addition, all samples assigned to an SDG must have been scheduled under the same contractual turnaround time. Preliminary Results have no impact on defining an SDG.
- All samples scheduled with the same level of deliverables.

5.5.2 Samples may be assigned to SDGs by matrix (i.e., all soil/sediment in one SDG, all aqueous/water in another), at the discretion of the laboratory. If PE samples are received within a Case, they shall be assigned to an SDG containing field samples for that Case. Such assignment shall be made at the time the samples are received and shall not be made retroactively. The SDG may exceed the 20 samples limit since the limitation excludes PE samples.

5.5.3 Each sample received by the Contractor will be labeled with an EPA Sample Number and accompanied by a TR/COC Record bearing the Sample Number and descriptive information regarding the sample. The EPA Sample Numbers are continuous, without spaces or hyphens. If the sample numbers do not conform to this requirement, contact SMO. The Contractor shall complete and sign the TR/COC Record, recording the date of sample receipt and sample condition on receipt for each sample container.

5.5.3.1 The Contractor shall follow the instructions given on the TR/COC Record in choosing the QC samples, when such information is provided. If no QC sample is designated on the TR/COC Record, the Contractor shall select a sample and notify SMO for EPA Regional acceptance. SMO shall contact the EPA Region for confirmation immediately after notification.

5.5.3.2 If the Sampler designated two (or more) samples as QC for the same matrix, and the QC samples are not specifically labeled with the analysis they are to be used for (dissolved metals and total metals), then the Contractor is to contact SMO to report the issue. SMO shall then contact the EPA Region and notify the Contractor of the EPA Regional decision. If the Sampler did not designate QC samples, then the Contractor is to select a sample for QC and to contact SMO to report the issue.

5.5.4 The date of delivery of the SDG, or any samples within the SDG, is the date that the last sample in the SDG is received. Validated Time of Sample Receipt (VTSR) is the date of sample receipt at the Contractor's facility, as recorded on the shipper's delivery receipt and sample TR/COC Record.

5.5.5 The Contractor shall submit electronic copy(ies) of signed TR/COC Record as Portable Document Format (PDF) file(s) for all samples in an SDG to SMO via the Superfund Analytical Services SMO Portal at https://epasmoweb.fedcsc.com within 3 working days following the receipt of the last sample in the SDG. TR/COC Records shall be submitted with their SDG information as specified in Exhibit B - Reporting and Deliverables Requirements.

5.5.6 The EPA Case Numbers, SDG Numbers, and EPA Sample Numbers shall be used by the Contractor in identifying samples received under this contract, both verbally and in reports/correspondence.

5.5.7 The Contractor shall immediately notify SMO regarding any problems and laboratory conditions that affect the timeliness of analyses and data reporting. In particular, the Contractor shall immediately notify SMO personnel in advance regarding sample data that will be delivered late and shall specify the estimated delivery date.

ED_004144A_00000101-00104

THIS PAGE INTENTIONALLY LEFT BLANK

ED_004144A_00000101-00105

EXHIBIT B

REPORTING AND DELIVERABLES REQUIREMENTS

ED_004144A_00000101-00106

THIS PAGE INTENTIONALLY LEFT BLANK

ED_004144A_00000101-00107

Exhibit B - Reporting and Deliverables Requirements

Table of Contents

Section		Page
1.0	CONTRACT REPORTS/DELIVERABLES DISTRIBUTION	5
1.1	Report Deliverable Schedule	5
1.2	Distribution	8
2.0	REPORTING REQUIREMENTS AND ORDER OF DATA DELIVERABLES	8
2.1	Introduction	8
2.2	Resubmission of Data	9
2.3	Sample Traffic Report/Chain of Custody Records	10
2.4	Complete Sample Delivery Group File	11
2.5	Copy of Complete Sample Delivery Group File	24
2.6	Electronic Data Deliverables	24
2.7	Preliminary Results	27
2.8	Method Detection Limits and Interelement Correction Factors	27
3.0	FORM INSTRUCTIONS	28
3.1	Introduction	28
3.2	General Information	28
3.3	Header and General Form Information	29
3.4	Reporting Forms	31
3.5	Sample Log-In Sheet [Form DC-1]	51
3.6	Full Inorganics Complete SDG File (CSF)Inventory Sheet [Form DC-2]	52
4.0	DATA REPORTING FORMS	53

ED_004144A_00000101-00108

THIS PAGE INTENTIONALLY LEFT BLANK

ED_004144A_00000101-00109

1.0 CONTRACT REPORTS/DELIVERABLES DISTRIBUTION

1.1 Report Deliverable Schedule

The following table identifies the contract reporting and deliverables requirements, and specifies the distribution that is required for each deliverable.

TABLE 1. DELIVERABLE SCHEDULE

Item		No. of Copies[1]	Delivery Schedule	Distribution		
				SMO	Region	QATS
A.	Sample Traffic Reports/Chain of Custody (TR/COC) Records	1	3 working days after receipt of last sample in Sample Delivery Group (SDG).	X		
B.[2,3]	Complete SDG File (CSF)	1	XX[4] days after Validated Time of Sample Receipt (VTSR) of last sample in SDG.		X	
C.[2,5,8]	Copy of CSF and Hardcopy Data in Portable Document Format (PDF) Format	1	XX[4] days after VTSR of last sample in SDG.	X		
D.[2,6]	Preliminary Results	1	Within 48 hours after receipt of each sample at laboratory, if requested.	X	X	
E.[2,8]	Electronic Data Deliverable (EDD)	1	XX[4] days after VTSR of last sample in SDG.	X		
F.[2]	Proficiency Testing (PT) Audits	1	XX[4] days after VTSR of last sample in SDG.	X		
G.[7,8]	Determination of Method Detection Limits (MDL) And Inductively Coupled Plasma - Atomic Emission Spectroscopy (ICP-AES) Interelement Correction (IEC) Factors	1	MDL values in spreadsheet format specified in Appendix A of Exhibit H prior to analysis of field samples, annually thereafter, and after major instrument adjustments to SMO and QATS. MDL and IEC study data prior to analysis of field samples, annually thereafter, and after major instrument adjustments to QATS only. Submission of all deliverables within 7 days of determinations.	X		X

ED_004144A_00000101-00110

TABLE 1. DELIVERABLE SCHEDULE (CON'T)

Item		No. of Copies[1]	Delivery Schedule	Distribution		
				SMO	Region	QATS
H.	Standard Operating Procedures (SOPs)	1	Submit within 60 days after contract award. Submit the latest version within 7 days of receipt of written request, to recipients as directed. (See Exhibit E, Section 4.0) Submit amended documents within 14 days of amended SOP(s) as directed in Exhibit E, Section 4.4.			X
I.	Quality Assurance Project Plan (QAPP)	1	Submit within XX[4] days after contract award. Submit the latest version within 7 days of receipt of written request, to recipients as directed. (See Exhibit E, Section 3.0) Submit amended documents within 14 days of amended QAPP as directed in Exhibit E, Section 3.3.			X
J.	Instrument Electronic Data	Lot	Retain for 3 years after data submission of the reconciled CSF. Submit within 7 days of receipt of written request, to recipients as directed. (See Exhibit F, Section 8.3)	As Directed		X
K.	Digestates	Lot	Retain for total metals (excluding mercury) 180 days after data submission. Submit within 7 days after receipt of written request, to recipients as directed.	As Directed		
L.	Samples	Lot	Retain for 60 days after data submission. Submit within 7 days after receipt of written request, to recipients as directed.	As Directed		

ED_004144A_00000101-00111

Footnotes:

[1] The number of copies specified is the number of copies required to be delivered to each recipient.

[2] **DELIVERABLES ARE TO BE REPORTED TOTAL AND COMPLETE.** Concurrent delivery is required. Delivery shall be made such that all designated recipients receive the item on the same calendar day. This includes resubmission of both the hardcopy and electronic deliverable. The date of delivery of the SDG, or any sample within the SDG, is the date that all samples have been delivered. **If the deliverables are due on a Saturday, Sunday, or Federal holiday, then they shall be delivered on the next business day. Deliverables received after this time will be considered late.**

[3] CSF will contain the original Sample Data for Level 2a, 2b, and 3 deliverables, plus all of the original documents described in Exhibit B, Section 2.4.

[4] The number of days associated with these elements will be provided in the associated laboratory contract document and will also be provided at the time of sample scheduling by the Sample Management Office (SMO) Contractor.

[5] Retain for 365 days after data submission, and submit as directed within 7 days after receipt of written request by the U.S. Environmental Protection Agency's Regional Contract Laboratory Program Contracting Officer's Representative (EPA Regional CLP COR) and Analytical Services Branch CLP COR (ASB CLP COR). Supplemental data (i.e., logbooks) may be requested in writing from the EPA Regional staff or the ASB CLP COR. All written communication sent by the EPA must include the EPA Regional CLP COR in the distribution list. If the EPA Regional CLP COR has not been included in the distribution list, contact the ASB CLP COR.

[6] If requested at the time of sample scheduling, the Contractor shall provide Preliminary Results, consisting of Form 1-IN sample analyses and field Quality Control (QC) analyses. The Contractor shall provide the SMO copy via the EPA Electronic Data Exchange and Evaluation System (EXES) at https://epasmoweb.fedcsc.com as a PDF file as preliminary results. The PDF file name should be PR_Case Number_SDG Number_Contract Number_Method. Sample TR/COC Records and SDG Cover Page (per Exhibit B, Section 2.7.1) shall be submitted with the Preliminary Results. The designated Regional recipient shall receive the Preliminary Results as a PDF file or in alternative electronic formats (e.g., Microsoft® Word) via email. The Contractor will be notified of the email address and format at the time of sample scheduling.

NOTE: Preliminary Results Delivery Schedule:

If a sample requiring Preliminary Results arrives at the laboratory before 5 p.m., the Preliminary Results are due within the required turnaround time. If a sample requiring Preliminary Results is received at the laboratory after 5 p.m., the Preliminary Results are due within the required turnaround time beginning at 8 a.m. the following day.

[7] Results required in each CSF.

[8] The Contractor shall provide SMO the electronic files via EXES at https://epasmoweb.fedcsc.com.

ED_004144A_00000101-00112

1.2 Distribution

The following addresses correspond to the "Distribution" column in Exhibit B, Section 1.1, Table 1 - Deliverable Schedule.

Sample Management Office (SMO)[1]:

Delivery instructions shall be provided upon contract award.

EPA Region:

SMO will provide the Contractor with the list of addressees for data delivery for the 10 EPA Regions. SMO will provide the Contractor with updated EPA Regional address/name lists as necessary throughout the period of the contract and identify other client recipients on a case-by-case basis.

EPA Regional CLP Contracting Officer's Representative:

SMO will provide the Contractor with the list of addresses for the EPA Regional CLP CORs. SMO will provide the Contractor with updated name/address lists as necessary throughout the period of the contract.

Quality Assurance Technical Support (QATS)[2]:

Delivery instructions shall be provided upon contract award.

2.0 REPORTING REQUIREMENTS AND ORDER OF DATA DELIVERABLES

2.1 Introduction

The Contractor shall provide reports and other deliverables as specified in Exhibit B, Section 1.1 (for hardcopy) and Exhibit H (for electronic). The required content and form of each deliverable are described in this Exhibit. All reports and documentation **shall be:**

- Legible;
- Clearly labeled and completed in accordance with instructions in this Exhibit;
- Arranged in the order specified in this Exhibit;
- Paginated sequentially according to instructions in this Exhibit; and
- Double-sided.
- Information reported on the forms listed in this Exhibit [excluding the Sample Log-In Sheet (DC-1) and the Complete SDG File (CSF) Inventory Sheet (DC-2)] must be computer-generated.

---

[1] SMO is a Contractor-operated facility operating under the SMO contract awarded and administered by the EPA.

[2] QATS is a Contractor-operated facility operating under the QATS contract awarded and administered by the EPA.

ED_004144A_00000101-00113

- The Contractor shall use EPA Case Numbers, SDG Numbers, and EPA Sample Numbers to identify samples received under this contract, verbally, electronically, and in reports and correspondence. The Contract Number and the Statement of Work (SOW) Number shall be specified in all correspondence. The Modification Analysis Number (MA No.) shall also be included for all Modified Analyses.

2.1.1 The Contractor shall submit Staged Electronic Data Deliverable (SEDD) Level 2a, Level 2b, or Level 3 deliverables as specified at the time of scheduling.

- Level 2a deliverables consist of a specified limited subset of the data reporting forms as specified in this Exhibit.
- Level 2b deliverables include all data reporting forms as specified in this Exhibit.
- Level 3 deliverables include all data reporting forms and supporting raw data as specified in this Exhibit.

2.1.2 Section 3.0 of this Exhibit contains instructions to the Contractor for properly completing all data reporting forms to provide the EPA with all required data. Section 4.0 of this Exhibit contains the required Data Reporting Forms in Agency-specified format. Data elements and instructions for electronically reporting data are contained in Exhibit H - Format for Electronic Data Deliverables.

2.2 Resubmission of Data

If submitted documentation does not conform to the above criteria, the Contractor is required to resubmit such documentation with deficiency(ies) corrected, at no additional cost to the EPA.

2.2.1 Whenever the Contractor is required to submit or resubmit data as a result of an on-site laboratory evaluation, through an EPA Regional CLP COR action, or through an EPA Regional data reviewer's request, the data shall be clearly marked as "Additional Data" and shall be sent to both contractual data recipients (SMO and EPA Region) and to the EPA's designated recipient when a written request for a copy of the CSF has been made within 5 business days (3 business days for a 7-day turnaround) of receipt of the request. A cover letter shall be included which describes what data are being delivered, to which EPA Case Number(s) and SDG Number(s) the data pertains, and who requested the data. Corrected data submitted as "Additional Data" at the request of an EPA Regional data reviewer shall only include the affected pages and be accompanied by a revised SDG Narrative (described in Section 2.4.5 of this Exhibit) documenting the reason(s) for the resubmittal.

2.2.2 Whenever the Contractor is required to submit or resubmit data as a result of Contract Compliance Screening (CCS) review by SMO, the data shall be sent to both contractual data recipients (SMO and EPA Region), and to the EPA's designated recipient when a written request for a copy of the CSF has been made, within 6 business days of receipt of the request. In all instances, the Contractor shall include a cover sheet (Laboratory Response to Results of Contract Compliance Screening). Electronic deliverables shall be submitted or resubmitted to SMO only. Revised DC-1 and DC-2 forms shall be resubmitted to SMO and the EPA Region.

ED_004144A_00000101-00114

2.3 Sample Traffic Report/Chain of Custody Records

2.3.1 Each sample received by the Contractor shall be labeled with an EPA Sample Number and will be accompanied by a TR/COC Record bearing the Sample Number and descriptive information regarding the sample. The Contractor shall complete the TR/COC Record, recording the date of sample receipt, verifying the number of samples, and signing the TR/COC Record.

2.3.1.1 Upon receipt, the Contractor shall sign for the receipt of samples in the COC Record section. The laboratory Sample Custodian or designated recipient opening and verifying the contents of the shipping container shall then verify receipt of all samples identified within the CLP Traffic Report section and sign and date the signature box located in the CLP Traffic Report section. If a non-CLP TR/COC Record is submitted with the samples (e.g., a Regional TR/COC Record), then the Contractor shall: (1) record the receipt date of the samples and sign the TR/COC Record to maintain the chain-of-custody, and (2) the Sample Custodian or designated recipient shall sign and date the TR/COC Record to verify sample information.

NOTE: If the laboratory is requested to transfer samples to another facility, the Contractor shall date and enter the name of the facility to where the samples will be transferred on the CLP TR/COC Record and document in the SDG Narrative.

2.3.1.2 The Contractor shall also enter the SDG Number, Case Number, and the Laboratory Contract Number on the CLP TR/COC Record. The EPA Sample Number of the first sample received in the SDG is the SDG Number. When several samples are received together in the first SDG shipment, the SDG Number shall be the lowest sample number (considering both alpha and numeric designations) in the first group of samples received under the SDG. Under no circumstances should any SDG Number be replicated within a Case. If necessary, select an alternative sample number for the SDG Number. The SDG Number is also reported on all data reporting forms (see Exhibit B, Section 3.0 - Form Instructions).

2.3.2 The Contractor shall submit TR/COC Records in SDG sets (i.e., TR/COC Records for all samples in an SDG), with an SDG Definition Sheet attached. The SDG Definition Sheet shall contain the following items:

- Laboratory Name;
- Contract Number;
- Modified Analysis Number (if applicable);
- Case Number;
- List of the method/analysis for each sample; and
- List of EPA Sample Numbers of all samples in the SDG, identifying the first and last samples received, and their Laboratory Receipt Dates (LRDs).

ED_004144A_00000101-00115

NOTE: When more than one sample is received in the first or last SDG shipment, the "first" sample received would be the sample with the lowest sample number (considering both alpha and numeric designations); the "last" sample received would be the sample with the highest sample number (considering both alpha and numeric designations).

2.3.3 EPA Sample Numbers are continuous, without spaces or hyphens. The original Sample TR/COC Record page, with laboratory receipt information and signed with an original Contractor signature, shall be submitted for each sample in the SDG.

2.3.4 If samples are received at the laboratory with multi-sample TR/COC Records, all the samples on one multi-sample TR/COC Record may not necessarily be in the same SDG. In this instance, the Contractor must make the appropriate number of photocopies of the TR/COC Record and submit one copy with each SDG Definition Sheet.

2.4 Complete Sample Delivery Group File

The CSF is described in this section. Sections 2.4.7 through 2.4.10 are specific to the individual analytical methods. If analysis by one or more of the analytical methods is not required, then those method sections are not required as a deliverable. Each method section shall include data for analysis of all samples in one SDG, including field samples, calibrations, QC samples, and supporting documentation. The CSF shall be complete before submission. The CSF shall be consecutively paginated (starting with page number one and ending with the number of all pages in the package).

2.4.1 The CSF shall contain all original documents where possible. No photocopies of original documents shall be placed in the CSF unless the original data was initially written in a bound notebook, maintained by the Contractor, or the originals were previously submitted to the EPA with another Case/SDG. The CSF shall contain all original documents and be numbered according to the specifications in Exhibit B, Sections 3.0 and 4.0; and organized according to Form DC-2.

NOTE: The Contractor shall retain a legible electronic (PDF) or hardcopy of the CSF for 365 days after submission of the reconciled data package to the Government. After this time, the Contractor may dispose of the package.

2.4.2 The CSF shall consist of the following original documents:

- Completed SDG Cover Page with signature and date
- EPA Sample TR/COC Record
- Completed and signed Sample Log-In Sheet [Form DC-1]
- Completed and signed Full Inorganics Complete SDG File (CSF) Inventory Sheet [Form DC-2]
- SDG Narrative
- All original shipping documents, including, but not limited to, the following documents:
  - Airbills (if an airbill is not received, include a hardcopy receipt requested from the shipping company or a printout of the shipping company's electronic tracking information);
  - Sample Tags (if present) sealed in plastic bags; and

ED_004144A_00000101-00116

- o All original receiving documents, including, but not limited to, other receiving forms or copies of receiving logbooks.

NOTE: All Case-related documentation may be used or admitted as evidence in subsequent legal proceedings. Any other Case-specific documents generated after the CSF is sent to the EPA, as well as copies that are altered in any fashion, are also deliverables to the EPA. Send the original to the EPA Region and a copy to SMO. Send to the EPA's designated recipient only upon written request.

2.4.3 For Level 3 deliverables, all original laboratory records of sample transfer, preparation, and analysis, including, but not limited to, the following documents:

- Percent Solids Log;
- Original preparation and analysis forms, or copies of preparation and analysis logbook pages;
- Internal sample and sample digestate and distillate transfer Chain of Custody Records; and
- Performance Evaluation (PE) Instruction forms.

2.4.4 All other original SDG-specific documents in the possession of the laboratory, including, but not limited to, the following documents:

- Communication logs;
- Copies of personal logbook pages;
- All handwritten SDG-specific notes; and
- Any other SDG-specific documents not covered by the above.

If the Contractor does submit SDG-specific documents to the EPA after the submission of the CSF, the documents shall be identified with submission codes. For example, if a page or pages were submitted with errors, the corrected pages would be identified with the Case and SDG Number, and the code R#, where the "#" is incremented for any subsequent resubmissions. If a page has been left out of a CSF, it must be submitted with the code A#. If the entire CSF is to be resubmitted, it must be designated with the code RS#. A revised Form DC-2 should be submitted, and the submission codes and locations of the documents in the CSF shall be recorded in the "Other Records" section on the revised Form DC-2.

2.4.5 SDG Narrative

This document shall be clearly labeled "SDG Narrative" and shall contain: Laboratory Name, SOW Number, Contract Number, Case Number, SDG Number, Modified Analysis Number (if applicable), and detailed documentation of any QC, sample, shipment, and/or analytical problems encountered in processing the samples reported in the CSF.

2.4.5.1 The Contractor shall list the target analytes for the SDG.

2.4.5.2 The Contractor shall include any technical and administrative problems encountered, and the resolution or corrective actions taken. These problems may include, but are not limited to interference problems encountered during analysis, listing results from raw results less than the negative Contract Required Quantitation Limit (CRQL), and any problems with the analysis of samples.

ED_004144A_00000101-00117

2.4.5.3 Document the alternative temperature technique used, if applicable, to determine shipping container temperature if a temperature indicator bottle is not present in the shipping container.

2.4.5.4 The Contractor shall also provide equations for calibration curves with its fit expression (at least one equation or calibration curve per method), to allow the recalculation of sample results from raw instrument output.

2.4.5.5 The Contractor shall also include a discussion of any SOW Modified Analyses. This includes attaching a copy of the approved modification form to the SDG Narrative.

2.4.5.6 The Contractor shall also identify and explain any differences which exist between the Form(s) 1-IN and supporting documentation provided in the data package and those previously provided as Preliminary Results.

2.4.5.7 When submitting corrected data as "Additional Data" at the request of an EPA Regional data reviewer, the Contractor shall include a revised SDG Narrative documenting the reason(s) for the resubmittal.

2.4.5.8 The Contractor shall indicate if IEC Factors were applied during the ICP-AES analysis and if background corrections were applied, during the ICP-AES and Inductively Coupled Plasma - Mass Spectrometry (ICP-MS) analyses. If background corrections were applied, the Contractor shall indicate if raw data was generated prior to the application of the background corrections.

2.4.5.9 The Contractor shall document the use of collision or reaction cells for reducing ICP-MS interferences. The Contractor shall document: the type of cell and cell mode; the gas(es) used; any additional manufacturer-recommended setup or QC applied to establish analytical conditions (e.g., oxide ratios); list the analysis conditions applied to each analyte and internal standard (e.g., mass), along with any changes in the course of the analytical sequence; and any deliberate use of molecular species to avoid isobaric interferences (e.g., $^{75}As^{16}O$ at mass 91 to avoid $^{40}Ar^{35}Cl$ at mass 75).

2.4.5.10 The Contractor shall report the pH value for soil/sediment samples, if the measurement is requested.

2.4.6 SDG Cover Page

Cover Page for the inorganic analyses data shall include: Laboratory Name; Laboratory Code; Contract Number; Case Number; SDG Number; Modified Analysis Number (MA No.) (if appropriate); SOW Number; EPA Sample Numbers in alphanumeric order cross-referenced with Laboratory Sample ID numbers; and Analytical Method.

2.4.6.1 The SDG Cover Page shall contain the following statement, verbatim: "I certify that this data package is in compliance with the terms and conditions of the contract, both technically and for completeness, for other than the conditions detailed in the SDG Narrative. Release of the data contained in this hardcopy Complete SDG File and in the electronic data submitted has been authorized by the Laboratory Manager or the Manager's designee, as verified by the following signature." This statement shall be directly followed by the signature of the Laboratory Manager or designee with typed lines containing the signer's name and title, and the date of signature.

ED_004144A_00000101-00118

2.4.7 ICP-AES Sample Data Forms and Raw Data

Sample data shall be submitted with the inorganic analysis data reporting forms for all samples in the SDG. All reporting forms shall be arranged in sequential order in increasing alphanumeric EPA Sample Number order, where applicable. The reporting forms shall be followed by the raw data, including sample, calibration, and QC data. This shall be followed by supporting documentation, including but not limited to: Digestion Logs, Standard and Reagent Preparation Logs, Analysis Logs, and Extraction Logs for Toxicity Characteristic Leaching Procedure/Synthetic Precipitation Leaching Procedure (TCLP/SPLP), where applicable.

2.4.7.1 Inorganic Analysis Data Sheet [Form 1-IN]. Tabulated analytical results of the requested analytes shall be included. The validation and release of these results shall be authorized by a specific signed statement on the Cover Page. In the event that the Laboratory Manager cannot verify all data reported for each sample, the Laboratory Manager shall provide a detailed description of the problems associated with the sample(s) in the SDG Narrative.

2.4.7.2 Quality Control and Calibration Data

The QC summary for inorganic analysis shall contain the forms listed below. Please note some forms are not required for Level 2a deliverables.

NOTE: If more than one form is necessary, duplicate forms must be arranged in chronological order.

2.4.7.2.1 Initial and Continuing Calibration Verification [Form 2-IN]. Not required for Level 2a deliverables.

2.4.7.2.2 Blanks [Form 3-IN]. For Level 2a deliverables, only Preparation Blank data is required.

2.4.7.2.3 ICP Interference Check Sample [Form 4-IN]. Not required for Level 2a deliverables.

2.4.7.2.4 Matrix Spike Sample Recovery [Form 5A-IN]

2.4.7.2.5 Post-Digestion/Distillation Spike Sample Recovery [Form 5B-IN]

2.4.7.2.6 Duplicates [Form 6-IN]

2.4.7.2.7 Laboratory Control Sample [Form 7-IN]

2.4.7.2.8 ICP-AES and ICP-MS Serial Dilutions [Form 8-IN]

2.4.7.2.9 Method Detection Limit [Form 9-IN]. Not required for Level 2a deliverables.

2.4.7.2.10 ICP-AES Interelement Correction Factors [Form 10A-IN]. Not required for Level 2a deliverables.

2.4.7.2.11 ICP-AES Interelement Correction Factors [Form 10B-IN]. Not required for Level 2a deliverables.

2.4.7.2.12 Analysis Log [Form 12-IN]. Not required for Level 2a deliverables.

2.4.7.2.13 Initial Calibration [Form 15-IN]. Not required for Level 2a deliverables.

2.4.7.2.14 Initial Calibration Summary [Form 16-IN]. Not required for Level 2a deliverables.

ED_004144A_00000101-00119

2.4.7.3 Raw Data - Only required for Level 3 deliverables.

For each reported value, the Contractor shall include in the CSF all raw data used to obtain that value. This applies to all required Quality Assurance/Quality Control (QA/QC) measurements, instrument standardization, as well as all sample analysis results. This statement does not apply to the verification of method and instrument parameters submitted as a part of each CSF. The raw data for all samples shall include not only the results for the requested analyte(s), but also those for all the interferents [Exhibit D - Inductively Coupled Plasma - Atomic Emission Spectroscopy, Table 1 - Interferent and Analyte Concentrations Used for ICP-AES Interference Check Sample (ICS)].

The raw data shall also contain the results of any other element(s) which have been determined to interfere with the requested analytes(s).

2.4.7.3.1 Raw data shall contain all instrument readouts and data pertinent to the reconstruction of the analysis and results (e.g., Bench Sheets) used for the sample results. For example, if the instrument is applying an interelement correction for a reduced analyte list, the data used to calculate the correction must be present in the raw data. Each exposure or instrumental reading shall be provided, including those readouts that may fall below the MDL. Raw data shall not be corrected for dilutions or volume adjustments. All instruments shall provide a legible hardcopy of the direct real-time instrument readout or a printout of the unedited instrument data output file. A photocopy of the instrument's direct sequential readout shall be included.

2.4.7.3.2 All raw data shall include concentration units.

2.4.7.3.3 Corrections to the laboratory data reporting forms and raw data shall be made by drawing single lines through the errors and entering the correct information. Information shall not be obliterated or rendered unreadable. Corrections and additions to information shall be signed (or initialed) and dated.

2.4.7.3.4 Raw data shall be labeled with EPA Sample Numbers and appropriate codes, shown in Exhibit B, Table 5 - Codes for Labeling Data, to unequivocally identify:

- Calibration standards;
- Initial and Continuing Calibration Blanks and Preparation Blanks;
- Initial and Continuing Calibration Verification standards, Interference Check Samples (ICSs), serial dilution samples, and Laboratory Control Samples (LCSs);
- Diluted and undiluted field samples;
- Duplicates;
- Spikes (matrix and post-digestion); and
- Instrument used.

ED_004144A_00000101-00120

2.4.7.4 Digestion Logs (only required for the Level 3 deliverables). The digestion logs shall be submitted for each preparation procedure for ICP-AES. These logs shall include: date; sample weights and volumes, with initial sample weight/volume and final volume clearly indicated; sufficient information to unequivocally identify which QC samples (i.e., LCS, Preparation Blank) correspond to each batch digested; comments describing any significant sample changes or reactions which occurred during preparation shall be entered in the log and noted in the SDG Narrative; indication of pH less than or equal to 2; PE preparation information (e.g., as-received PEs to final digestate); identification of the sample preparer(s) [signature(s)]; and sufficient information to identify the concentrations and volumes of reagents added to the samples.

2.4.7.5 Analysis Logs (only required for the Level 3 deliverables). Logbooks in hardcopy or electronic form shall be maintained for all analytical sequences to enable their reconstruction in time. The analysis logs shall record at a minimum: the date and time of analysis of each analysis within the sequence; identification that includes electronic data file identifiers (IDs), Lab Sample IDs or EPA Sample IDs; analyst identification; notation of QC failures and reasons; and sample dilutions.

2.4.7.6 Standard and Reagent Preparation Logs (only required for the Level 3 deliverables). Logbooks in hardcopy or electronic format shall be maintained for the preparation of all standards, reagents, and extraction fluids. Standards shall be clearly labeled as to the identity of: the analyte or analytes, the standard ID, concentration, date prepared, expiration date of the solution, special storage requirements if any, and the preparer's signature. Standards and reagents must be traceable. Dilutions from the primary standard and the calculations for determining their concentrations shall be recorded and verified by a second person.

2.4.7.7 Extraction Logs for TCLP and SPLP (only required for Level 3 deliverables). Logbooks shall be submitted for any extraction performed by the Contractor. These shall include: the amount of aqueous and solid phases, percent solids determination, sample weight extracted, extraction fluid used, and start and end time of extraction. For TCLP, include log for determination of extraction fluid, including sample weights and the initial and final pH determination.

2.4.7.8 Performance Evaluation (PE) Sample Instructions (only required for the Level 3 deliverable). If PE or PT audit samples are provided to the Contractor and analyzed for ICP-AES as part of the SDG, the Contractor shall submit a copy of the instructions that accompanied the sample(s) in the CSF.

2.4.8 ICP-MS Sample Data Forms and Raw Data

Sample data shall be submitted with the inorganic analysis data reporting forms for all samples in the SDG. All reporting forms shall be arranged in sequential order in increasing alphanumeric EPA Sample Number order, where applicable. The reporting forms shall be followed by the raw data, including sample, calibration, and QC data. This shall be followed by supporting documentation, including but not limited to: Digestion Logs, Standard and Reagent Preparation Logs, and Analysis Logs, where applicable.

ED_004144A_00000101-00121

2.4.8.1 Inorganic Analysis Data Sheet [Form 1-IN]. Tabulated analytical results of the requested analytes shall be included. The validation and release of these results shall be authorized by a specific signed statement on the Cover Page. In the event that the Laboratory Manager cannot verify all data reported for each sample, the Laboratory Manager shall provide a detailed description of the problems associated with the sample(s) in the SDG Narrative.

2.4.8.2 Quality Control and Calibration Data

The QC summary for inorganic analysis shall contain the forms listed below. Please note some forms are not required for Level 2a deliverables.

NOTE: If more than one form is necessary, duplicate forms must be arranged in chronological order.

2.4.8.2.1 Initial and Continuing Calibration Verification [Form 2-IN]. Not required for Level 2a deliverables.

2.4.8.2.2 Blanks [Form 3-IN]. For Level 2a deliverables, only Preparation Blank data is required.

2.4.8.2.3 ICP Interference Check Sample [Form 4-IN]. Not required for Level 2a deliverables.

2.4.8.2.4 Matrix Spike Sample Recovery [Form 5A-IN]

2.4.8.2.5 Post-Digestion/Distillation Spike Sample Recovery [Form 5B-IN]

2.4.8.2.6 Duplicates [Form 6-IN]

2.4.8.2.7 Laboratory Control Sample [Form 7-IN]

2.4.8.2.8 ICP-AES and ICP-MS Serial Dilutions [Form 8-IN]

2.4.8.2.9 Method Detection Limit [Form 9-IN]. Not required for Level 2a deliverables.

2.4.8.2.10 ICP-MS Internal Standard Association [Form 11-IN]. Not required for Level 2a deliverables.

2.4.8.2.11 Analysis Log [Form 12-IN]. Not required for Level 2a deliverables.

2.4.8.2.12 ICP-MS Tune [Form 13-IN]. Not required for Level 2a deliverables.

2.4.8.2.13 ICP-MS Internal Standards Relative Intensity Summary [Form 14-IN]. Not required for Level 2a deliverables.

2.4.8.2.14 Initial Calibration [Form 15-IN]. Not required for Level 2a deliverables.

2.4.8.2.15 Initial Calibration Summary [Form 16-IN]. Not required for Level 2a deliverables.

2.4.8.3 Raw Data - Only required for Level 3 deliverables.

For each reported value, the Contractor shall include in the CSF all raw data used to obtain that value. This applies to all required QA/QC measurements, instrument standardization, as well as all sample analysis results. This statement does not apply to the verification of method and instrument parameters submitted as a part of each CSF. The raw data for all samples shall include not only the results for the requested analyte(s), but also those for all the interferents [Exhibit D - Inductively Coupled Plasma - Mass Spectrometry, Table 1 - Interferent and Analyte Concentrations Used for ICP-MS Interference Check Sample (ICS)].

ED_004144A_00000101-00122

The raw data shall also contain the results of any other element(s) or masses which have been determined to interfere with the requested analytes(s).

2.4.8.3.1 Raw data shall contain all instrument readouts and data pertinent to the reconstruction of the analysis and results (e.g., Bench Sheets) used for the sample results. For example, if the instrument is applying a correction for a reduced analyte list, the data used to calculate the correction must be present in the raw data. Each exposure or instrumental reading shall be provided, including those readouts that may fall below the MDL. Raw data shall not be corrected for dilutions or volume adjustments. All instruments shall provide a legible hardcopy of the direct real-time instrument readout or a printout of the unedited instrument data output file. A photocopy of the instrument's direct sequential readout shall be included.

2.4.8.3.2 All raw data shall include concentration units.

2.4.8.3.3 Corrections to the laboratory data reporting forms and raw data shall be made by drawing single lines through the errors and entering the correct information. Information shall not be obliterated or rendered unreadable. Corrections and additions to information shall be signed (or initialed) and dated.

2.4.8.3.4 Raw data shall be labeled with EPA Sample Numbers and appropriate codes, shown in Exhibit B, Table 5 - Codes for Labeling Data, to unequivocally identify:

- Calibration standards;
- Initial and Continuing Calibration Blanks and Preparation Blanks;
- Initial and Continuing Calibration Verification standards, ICSs, serial dilution samples, and LCSs;
- Diluted and undiluted field samples;
- Duplicates;
- Spikes (matrix and post-digestion); and
- Instrument used.

2.4.8.4 Digestion Logs (only required for the Level 3 deliverables). The digestion logs shall be submitted for each preparation procedure for ICP-MS. These logs shall include: date; sample weights and volumes, with initial sample weight/volume and final volume clearly indicated; sufficient information to unequivocally identify which QC samples (i.e., LCS, Preparation blank) correspond to each batch digested; comments describing any significant sample changes or reactions which occurred during preparation shall be entered in the log and noted in the SDG Narrative; indication of pH less than or equal to 2; PE preparation information (e.g., as-received PEs to final digestate); identification of the sample preparer(s) [signature(s)]; and sufficient information to identify the concentrations and volumes of reagents added to the samples.

ED_004144A_00000101-00123

2.4.8.5 Analysis Logs (only required for the Level 3 deliverables). Logbooks in hardcopy or electronic form shall be maintained for all analytical sequences to enable their reconstruction in time. The analysis logs shall record at a minimum: the date and time of analysis of each analysis within the sequence; identification that includes electronic data file IDs, Lab Sample IDs or EPA Sample IDs; analyst identification; notation of QC failures and reasons; and sample dilutions.

2.4.8.6 Standard and Reagent Preparation Logs (only required for the Level 3 deliverables). Logbooks in hardcopy or electronic format shall be maintained for the preparation of all standards and reagents. Standards shall be clearly labeled as to the identity of: the analyte or analytes, the standard ID, concentration, date prepared, expiration date of the solution, special storage requirements if any, and the preparer's signature. Standards and reagents must be traceable. Dilutions from the primary standard and the calculations for determining their concentrations shall be recorded and verified by a second person.

2.4.8.7 Performance Evaluation (PE) Sample Instructions (only required for the Level 3 deliverable). If PE or PT audit samples are provided to the Contractor and analyzed for ICP-MS as part of the SDG, the Contractor shall submit a copy of the instructions that accompanied the sample(s) in the CSF.

2.4.9 Mercury Sample Data Forms and Raw Data

Sample data shall be submitted with the inorganic analysis data reporting forms for all samples in the SDG. All reporting forms shall be arranged in sequential order in increasing alphanumeric EPA Sample Number order, where applicable. The reporting forms shall be followed by the raw data, including sample, calibration, and QC data. This shall be followed by supporting documentation, including but not limited to: Digestion Logs, Standard and Reagent Preparation Logs, Analysis Logs, and Extraction Logs for TCLP/SPLP, where applicable.

2.4.9.1 Inorganic Analysis Data Sheet [Form 1-IN]. Tabulated analytical results for mercury shall be included. The validation and release of these results shall be authorized by a specific signed statement on the Cover Page. In the event that the Laboratory Manager cannot verify all data reported for each sample, the Laboratory Manager shall provide a detailed description of the problems associated with the sample(s) in the SDG Narrative.

2.4.9.2 Quality Control and Calibration Data

The QC summary for inorganic analysis shall contain the forms listed below. Please note some forms are not required for Level 2a deliverables.

NOTE: If more than one form is necessary, duplicate forms must be arranged in chronological order.

2.4.9.2.1 Initial and Continuing Calibration Verification [Form 2-IN]. Not required for Level 2a deliverables.

2.4.9.2.2 Blanks [Form 3-IN]. For Level 2a deliverables, only Preparation Blank data is required.

2.4.9.2.3 Matrix Spike Sample Recovery [Form 5A-IN]

2.4.9.2.4 Duplicates [Form 6-IN]

2.4.9.2.5 Method Detection Limit [Form 9-IN]. Not required for Level 2a deliverables.

ED_004144A_00000101-00124

2.4.9.2.6 Analysis Log [Form 12-IN]. Not required for Level 2a deliverables.

2.4.9.2.7 Initial Calibration [Form 15-IN]. Not required for Level 2a deliverables.

2.4.9.2.8 Initial Calibration Summary [Form 16-IN]. Not required for Level 2a deliverables.

2.4.9.3 Raw Data - Only required for Level 3 deliverables.

For each reported value, the Contractor shall include in the CSF all raw data used to obtain that value. This applies to all required QA/QC measurements, instrument standardization, as well as all sample analysis results. This statement does not apply to the verification of method and instrument parameters submitted as a part of each CSF.

2.4.9.3.1 Raw data shall contain all instrument readouts and data pertinent to the reconstruction of the analysis and results (e.g., Bench Sheets) used for the sample results. Each exposure or instrumental reading shall be provided, including those readouts that may fall below the MDL. Raw data shall not be corrected for dilutions or volume adjustments. All instruments shall provide a legible hardcopy of the direct real-time instrument readout or a printout of the unedited instrument data output file. A photocopy of the instrument's direct sequential readout shall be included.

2.4.9.3.2 All raw data shall include absorbances or concentration units for mercury.

2.4.9.3.3 Corrections to the laboratory data reporting forms and raw data shall be made by drawing single lines through the errors and entering the correct information. Information shall not be obliterated or rendered unreadable. Corrections and additions to information shall be signed (or initialed) and dated.

2.4.9.3.4 Raw data shall be labeled with EPA Sample Numbers and appropriate codes, shown in Exhibit B, Table 5 - Codes for Labeling Data, to unequivocally identify:

- Calibration standards;
- Initial and Continuing Calibration Blanks and Preparation Blanks;
- Initial and Continuing Calibration Verification standards;
- Diluted and undiluted field samples;
- Duplicates;
- Spikes (matrix); and
- Instrument used.

2.4.9.4 Digestion Logs (only required for the Level 3 deliverables). The digestion logs shall be submitted for each preparation procedure for mercury. These logs shall include: date; sample weights and volumes, with initial sample weight/volume clearly indicated; sufficient information to unequivocally identify which Calibration Standards or QC samples [e.g., Initial Calibration Verification (ICV), Preparation Blank] correspond to each batch digested; comments describing any significant sample changes or

ED_004144A_00000101-00125

reactions which occurred during preparation shall be entered in the log and noted in the SDG Narrative; indication of pH less than or equal to 2; PE preparation information (e.g., as-received PEs to final digestate); identification of the sample preparer(s) [signature(s)]; and sufficient information to identify the concentrations and volumes of reagents added to the samples.

2.4.9.5 Analysis Logs (only required for the Level 3 deliverables). Logbooks in hardcopy or electronic form shall be maintained for all analytical sequences to enable their reconstruction in time. The analysis logs shall record at a minimum: the date and time of analysis of each analysis within the sequence; identification that includes electronic data file IDs, Lab Sample IDs or EPA Sample IDs; analyst identification; notation of QC failures and reasons; and sample dilutions.

2.4.9.6 Standard and Reagent Preparation Logs (only required for the Level 3 deliverables). Logbooks in hardcopy or electronic format shall be maintained for the preparation of all standards, reagents, and extraction fluids. Standards shall be clearly labeled as to: the identity of the analyte or analytes, the standard ID, concentration, date prepared, expiration date of the solution, special storage requirements if any, and the preparer's signature. Standards and reagents must be traceable. Dilutions from the primary standard and the calculations for determining their concentrations shall be recorded and verified by a second person.

2.4.9.7 Extraction Logs for TCLP and SPLP (only required for Level 3 deliverables). Logbooks shall be submitted for any extraction performed by the Contractor. These shall include: the amount of aqueous and solid phases, percent solids determination, sample weight extracted, extraction fluid used, and start and end time of extraction. For TCLP, include log for determination of extraction fluid, including sample weights and the initial and final pH determination.

2.4.9.8 Performance Evaluation (PE) Sample Instructions (only required for the Level 3 deliverable). If PE or PT audit samples are provided to the Contractor and analyzed for mercury as part of the SDG, the Contractor shall submit a copy of the instructions that accompanied the sample(s) in the CSF.

2.4.10 Cyanide Sample Data Forms and Raw Data

Sample data shall be submitted with the inorganic analysis data reporting forms for all samples in the SDG. All reporting forms shall be arranged in sequential order in increasing alphanumeric EPA Sample Number order, where applicable. The reporting forms shall be followed by the raw data, including sample, calibration, and QC data. This shall be followed by supporting documentation, including but not limited to: Distillation Logs, Standard and Reagent Preparation Logs, Analysis Logs, and Extraction Logs for SPLP, where applicable.

2.4.10.1 Inorganic Analysis Data Sheet [Form 1-IN]. Tabulated analytical results for cyanide shall be included. The validation and release of these results shall be authorized by a specific signed statement on the Cover Page. In the event that the Laboratory Manager cannot verify all data reported for each sample, the Laboratory Manager shall provide a detailed description of the problems associated with the sample(s) in the SDG Narrative.

ED_004144A_00000101-00126

2.4.10.2 Quality Control and Calibration Data

The QC summary for inorganic analysis shall contain the forms listed below. Please note some forms are not required for Level 2a deliverables.

NOTE: If more than one form is necessary, duplicate forms must be arranged in chronological order.

2.4.10.2.1 Initial and Continuing Calibration Verification [Form 2-IN]. Not required for Level 2a deliverables.

2.4.10.2.2 Blanks [Form 3-IN]. For Level 2a deliverables, only Preparation Blank data is required.

2.4.10.2.3 Matrix Spike Sample Recovery [Form 5A-IN]

2.4.10.2.4 Post-Digestion/Distillation Spike Sample Recovery [Form 5B-IN]

2.4.10.2.5 Duplicates [Form 6-IN]

2.4.10.2.6 Method Detection Limit [Form 9-IN]. Not required for Level 2a deliverables.

2.4.10.2.7 Analysis Log [Form 12-IN]. Not required for Level 2a deliverables.

2.4.10.2.8 Initial Calibration [Form 15-IN]. Not required for Level 2a deliverables.

2.4.10.2.9 Initial Calibration Summary [Form 16-IN]. Not required for Level 2a deliverables.

2.4.10.3 Raw Data - Only required for Level 3 deliverables.

For each reported value, the Contractor shall include in the CSF all raw data used to obtain that value. This applies to all required QA/QC measurements, instrument standardization, as well as all sample analysis results. This statement does not apply to the verification of method and instrument parameters submitted as a part of each CSF.

2.4.10.3.1 Raw data shall contain all instrument readouts and data pertinent to the reconstruction of the analysis and results (e.g., Bench Sheets) used for the sample results. Each exposure or instrumental reading shall be provided, including those readouts that may fall below the MDL. Raw data shall not be corrected for dilutions or volume adjustments. All instruments shall provide a legible hardcopy of the direct real-time instrument readout or a printout of the unedited instrument data output file. A photocopy of the instrument's direct sequential readout shall be included.

2.4.10.3.2 All raw data shall include absorbances or concentration units for cyanide.

2.4.10.3.3 Corrections to the laboratory data reporting forms and raw data shall be made by drawing single lines through the errors and entering the correct information. Information shall not be obliterated or rendered unreadable. Corrections and additions to information shall be signed (or initialed) and dated.

2.4.10.3.4 Raw data shall be labeled with EPA Sample Numbers and appropriate codes, shown in Exhibit B, Table 5 - Codes for Labeling Data, to unequivocally identify:

- Calibration standards;

ED_004144A_00000101-00127

- Initial and Continuing Calibration Blanks and Preparation Blanks;
- Initial and Continuing Calibration Verification standards;
- Diluted and undiluted field samples;
- Duplicates;
- Spikes (matrix and post-distillation); and
- Instrument used.

2.4.10.4 Distillation Logs (only required for the Level 3 deliverables). The distillation logs shall be submitted as appropriate for each preparation procedure for cyanide. These logs shall include: date; sample weights and volumes, with initial sample weight/volume and final volume clearly indicated; sufficient information to unequivocally identify which Calibration Standards and QC samples (e.g., ICV, Preparation Blank) correspond to each batch distilled; comments describing any significant sample changes or reactions which occurred during preparation shall be entered in the log and noted in the SDG Narrative; indication of pH greater than or equal to 12; PE preparation information (e.g., as-received PEs to final distillate); identification of the sample preparer(s) [signature(s)]; and sufficient information to identify the concentrations and volumes of reagents added to the samples.

2.4.10.5 Analysis Logs (only required for the Level 3 deliverables). Logbooks in hardcopy or electronic form shall be maintained for all analytical sequences to enable their reconstruction in time. The analysis logs shall record at a minimum: the date and time of analysis of each analysis within the sequence; electronic data file IDs; Lab Sample IDs or EPA Sample IDs; analyst identification; notation of QC failures and reasons; and sample dilutions.

2.4.10.6 Standard and Reagent Preparation Logs (only required for the Level 3 deliverables). Logbooks in hardcopy or electronic format shall be maintained for the preparation of all standards, reagents, and extraction fluids. Standards shall be clearly labeled as to: the identity of the analyte or analytes, the standard ID, concentration, date prepared, expiration date of the solution, special storage requirements if any, and the preparer's signature. Standards and reagents must be traceable. Dilutions from the primary standard and the calculations for determining their concentrations shall be recorded and verified by a second person.

2.4.10.7 Extraction Logs for SPLP (only required for Level 3 deliverables). Logbooks shall be submitted for any extraction performed by the Contractor. These shall include: the amount of aqueous and solid phases, percent solids determination, sample weight extracted, extraction fluid used, and start and end time of extraction.

2.4.10.8 Performance Evaluation (PE) Sample Instructions (only required for the Level 3 deliverable). If PE or PT audit samples are provided to the Contractor and analyzed for cyanide as part of the SDG, the Contractor shall submit a copy of the instructions that accompanied the sample(s) in the CSF.

ED_004144A_00000101-00128

2.5 Copy of Complete Sample Delivery Group File

The laboratory shall provide a copy of the CSF and a PDF file to SMO, as specified in Table 1 - Deliverable Schedule, of this Exhibit.

2.6 Electronic Data Deliverables

The Contractor shall provide the required electronic data deliverable as specified in Table 1 - Deliverable Schedule of this Exhibit.

2.6.1 Electronic Data Delivery in Staged Electronic Data Deliverable

The Contractor shall provide an EDD in SEDD format for Levels 2a, 2b, and 3. The EDD shall include analytical data for all samples in the SDG, as specified in Exhibit H - Format for Electronic Data Deliverables.

2.6.2 Portable Document Format of Complete Sample Delivery Group File

The Contractor shall provide a complete copy of the CSF, and any additional or reconciled hardcopy deliverables, in a PDF file via EXES at https://epasmoweb.fedcsc.com, and follow the naming convention for the PDF file. The format of the PDF file should be HCD_Case Number_SDG Number_Contract Number_Submission Type.

2.6.2.1 The following identifiers are used based on submission type:

TABLE 2. PDF SUBMISSION IDENTIFIERS

Submission Type	**Identifier**
First Submission	FS
Replacement Submission (if a complete replacement of the first submission PDF is required)	RS
Reconciliation Submission	R# (The # character represents the number of the reconciliation. For example, the first reconciliation submission would be identified as R1.)
Additional Data Submission	A# (The # character represents the number of the additional data submissions. For example, the first additional data submission would be identified as A1.)

2.6.2.1.1 The PDF file shall be organized in accordance with the directions provided in Exhibit B, Section 2.0 of the SOW.

2.6.2.1.2 Inorganic data shall be bookmarked using a hierarchical bookmark structure (i.e., an overview or "parent" bookmark, and a subordinate or "child" bookmark nested underneath the "parent" bookmark). The required hierarchical structure is shown in Table 3 - Hierarchical Bookmark Structure.

ED_004144A_00000101-00129

TABLE 3. HIERARCHICAL BOOKMARK STRUCTURE

Group Bookmark	Parent Bookmark	Child Bookmark
SDG Cover Page, Sample TR/COC Records, Form DC-1, Form DC-2, and SDG Narrative		
ICP-AES Data	Sample Data	Inorganic Analysis Data Sheet in increasing alphanumeric EPA Sample Number order
	QC Summary	Initial and Continuing Calibration Verification
		Blanks
		ICP Interference Check Sample
		Matrix Spike Sample Recovery
		Post-Digestion Spike Sample Recovery
		Duplicates
		Laboratory Control Sample
		ICP-AES Serial Dilutions
		Method Detection Limits
		ICP-AES Interelement Correction Factors
		Analysis Log
		Initial Calibration
		Initial Calibration Summary
	Raw Data	ICP-AES Raw Data
		ICP-AES Digestion Logs
		Preparation and Analysis Logbooks
		TCLP/SPLP Logbooks
		PE/PT Instruction Forms
ICP-MS Data	Sample Data	Inorganic Analysis Data Sheet in increasing alphanumeric EPA Sample Number order
	QC Summary	Initial and Continuing Calibration Verification
		Blanks
		ICP Interference Check Sample
		Matrix Spike Sample Recovery
		Post-Digestion Spike Sample Recovery
		Duplicates
		Laboratory Control Sample
		ICP-MS Serial Dilutions
		Method Detection Limits
		ICP-MS Internal Standard Association
		Analysis Log
		ICP-MS Tune
		ICP-MS Internal Standard Relative Intensity Summary
		Initial Calibration
		Initial Calibration Summary

ED_004144A_00000101-00130

TABLE 3. HIERARCHICAL BOOKMARK STRUCTURE (CON'T)

Group Bookmark	Parent Bookmark	Child Bookmark
ICP-MS Data (Cont'd)	Raw Data	ICP-MS Raw Data
		ICP-MS Digestion Logs
		Preparation and Analysis Logbooks
		PE/PT Instruction Forms
Mercury Data	Sample Data	Inorganic Analysis Data Sheet in increasing alphanumeric EPA Sample Number order
	QC Summary	Initial and Continuing Calibration Verification
		Blanks
		Matrix Spike Sample Recovery
		Duplicates
		Method Detection Limits
		Analysis Log
		Initial Calibration
		Initial Calibration Summary
	Raw Data	Mercury Raw Data
		Mercury Digestion Logs
		Preparation and Analysis Logbooks
		TCLP/SPLP Logbooks
		PE/PT Instruction Forms
Cyanide Data	Sample Data	Inorganic Analysis Data Sheet in increasing alphanumeric EPA Sample Number order
	QC Summary	Initial and Continuing Calibration Verification
		Blanks
		Matrix Spike Sample Recovery
		Post-Distillation Spike Sample Recovery
		Duplicates
		Method Detection Limits
		Analysis Log
		Initial Calibration
		Initial Calibration Summary
	Raw Data	Cyanide Raw Data
		Cyanide Distillation Logs
		Preparation and Analysis Logbooks
		SPLP Logbooks
		PE/PT Instruction Forms
Receiving Documents, Transfer Records, and Miscellaneous	Additional Documents	Percent Solids Log
		Receiving Logbooks
		Internal Sample, Digestate, and Distillate Transfer Chain-of-Custody Records
		Communication Logs

ED_004144A_00000101-00131

2.7 Preliminary Results

The Form(s) 1-IN data results (including all appropriate qualifiers and flags) shall be submitted for all samples in one SDG of a Case. Sample analysis shall follow all requirements stipulated in Exhibit D. The Contractor shall clearly identify the Preliminary Results by labeling each Form(s) 1-IN as "Preliminary Results" under the form title (i.e., under Inorganic Analysis Data Sheet). The Contractor shall also include a disclaimer on all Form(s) 1-IN stating that the "Data results contained on this Form 1-IN are for screening purposes only, and may not have been validated for CLP criteria." Sample TR/COC Records and SDG Cover Page (per Exhibit B Section 2.7.1) shall be submitted with the Preliminary Results.

2.7.1 The Contractor shall submit the SDG Cover Page following the specifications in Exhibit B, Sections 2.4.6 and 3.4.1. The SDG Cover Page shall be clearly labeled to indicate that the data being reported are Preliminary Results. The SDG Cover Page shall contain the following statement, verbatim: "I certify that these Preliminary Results are in compliance with the terms and conditions of the contract, both technically and for completeness, for other than the conditions detailed in the SDG Narrative. Release of the data contained in this hardcopy Data Package has been authorized by the Laboratory Manager or the Manager's designee, as verified by the following signature." This statement shall be directly followed by the signature of the Laboratory Manager or designee with typed lines containing the signer's name and title, and the date of signature.

2.8 Method Detection Limits and Interelement Correction Factors

The Contractor shall perform and report determination of the MDLs by the method specified in Exhibit D - Analytical Methods for each instrument used under this contract. Results for the verification of method parameters for the current period shall be submitted using Form 9-IN.

The Contractor shall also perform and report ICP-AES IEC factors (including method of determination) and wavelengths used. Results for the verification of method parameters for the current period shall be submitted using Forms 10A-IN and 10B-IN.

The Contractor shall deliver all determined MDLs to SMO and QATS electronically in the format described in Appendix A - Format Characteristics for Method Detection Limit Study Data, of Exhibit H - Format for Electronic Data Deliverables, according to the delivery schedule specified in Table 1 - Deliverable Schedule, of Exhibit B - Reporting and Deliverables Requirements.

Submission of the study data for the determination of method and instrument parameters, to QATS only, shall include the data used to determine the values reported as well as, for the IECs, the standard preparation logs, sample preparation logs, and analysis logs with analytical sequences. The Contractor shall provide MDL and IEC raw data including sample, calibration, and QC data and supporting documentation, including, but not limited to: Digestion/Distillation Logs, Standard and Reagent Preparation Logs, and Analysis Logs, where applicable, to QATS only, according to the delivery schedule specified in Table 1 - Deliverable Schedule, of Exhibit B - Reporting and Deliverables Requirements.

ED_004144A_00000101-00132

3.0 FORM INSTRUCTIONS

3.1 Introduction

This section contains specific instructions for the completion of all required Inorganic Data Reporting Forms.

3.2 General Information

Values shall be reported on the hardcopy forms according to the respective form instructions in this section.

3.2.1 The data reporting forms discussed in Exhibit B, Section 3.4, and presented in Exhibit B, Section 4.0, have been designed in conjunction with the electronic data format specified in Exhibit H - Format for Electronic Data Deliverables. Information entered on these forms shall **not** exceed the size of the field given on the form, including such laboratory-generated items as "Lab Name" and "Lab Sample ID". See Table 4 - Required Forms for Reporting Level, for a listing of required forms by reporting level.

TABLE 4. REQUIRED FORMS FOR REPORTING LEVEL

Level	Required Forms
SEDD 2a	Forms 1, 3, 5, 6, 7, 8
SEDD 2b	Forms 1-16 (all Forms)
SEDD 3	Forms 1-16 (all Forms)

3.2.2 All characters which appear on the data reporting forms presented in Section 4.0 shall be reproduced by the Contractor when submitting data, and the format of the forms submitted shall provide exactly the same information as that shown in the contract. No information may be added, deleted, or moved from its specified position. The names of various fields and analytes (i.e., "Lab Code", "Preparation Batch") shall appear as they are listed in Exhibit B - Reporting and Deliverables Requirements, and Exhibit C - Inorganic Target Analyte List and Contract Required Quantitation Limits, of this SOW.

3.2.3 Rounding Rules

For rounding off numbers to the appropriate level of precision, observe the following common rules. If the figure following those to be retained is greater than or equal to 5, the absolute value of the result is to be rounded up; otherwise the absolute value of the result is rounded down. For example, -0.4365 rounds to -0.44 and -2.3464 rounds to -2.3. Also see "Rounding Rules" in Exhibit G - Glossary of Terms.

3.2.3.1 Before evaluating a number for being in control or out of control of a certain limit (other than the CRQL), the number evaluated shall be rounded using the above rounding rules to the significance reported for that limit. For example, the control limit for an ICV is plus or minus 10% of the true value. Then a calculated percent recovery (%R) of 110.46 shall be reported on Form 2-IN as 110, which is within the control limits of 90-110. On the other hand, a calculated %R of 110.50 shall be reported on Form 2-IN as 111, which is not within the 90-110 percent control limits.

ED_004144A_00000101-00133

3.2.4 Significant Figures

All results shall be transcribed to Inorganic Forms 1-IN through 16-IN from the instrument raw data to two significant figures if the value is less than 10, or three significant figures if the value is greater than or equal to 10 as described in Exhibit B - Reporting and Deliverables Requirements, and Exhibit H - Format for Electronic Data Deliverables. The raw data result is to be rounded only when the number of figures in the raw data result exceeds the maximum number of figures specified for that result entry for that form. The instrument raw data files contain the raw data values. The hardcopy raw data may be a rounded or truncated representation of the instrument raw data.

3.3 Header and General Form Information

Six pieces of information are common to the header section of each data reporting form. These are Lab Name, Contract, Lab Code, Case Number (Case No.), Modified Analysis Number (MA No.), and SDG Number (SDG No.). Except as noted below for MA No., this information shall be entered on every form and shall match on all forms.

3.3.1 "Lab Name" shall be the name chosen by the Contractor to identify the laboratory.

3.3.2 "Contract" is the number of the EPA contract under which the analyses were performed.

3.3.3 "Lab Code" is an alphanumeric abbreviation, assigned by the EPA, to identify the laboratory and aid in data processing. This Lab Code will be assigned by the EPA at the time a contract is awarded and shall not be modified by the Contractor, except at the direction of the EPA Contracting Officer (CO). If a change of name or ownership occurs at the laboratory, the Lab Code will remain the same unless and until the Contractor is directed by the EPA CO to use another EPA-assigned Lab Code.

3.3.4 "Case No." is the SMO-assigned Case Number associated with the sample, and reported on the TR/COC Record or sample shipping paperwork.

3.3.5 "MA No." is the EPA-assigned number for analyses performed for an analytical method under the Modified Analysis clause in Exhibit A - Summary of Requirements. If samples are to be analyzed under the Modified Analysis clause, the Contractor shall list the modification reference number on all forms. If the analyses have no modified requirements, leave the "MA No." field blank.

3.3.6 "SDG No." is the SDG Number.

3.3.7 "EPA SAMPLE NO." appears either in the header information of the form or as the left column of a table summarizing data from a number of samples.

3.3.7.1 All samples, leachates, blanks, matrix spikes, post-digestion/ distillation spikes, duplicates, and serial dilutions shall be identified with an EPA Sample Number. For samples, an EPA Sample Number is the unique identifying number given on the TR/COC Record or sample shipping records that accompanied that sample. In order to facilitate data assessment, the sample suffixes listed in Exhibit B, Table 5 - Codes for Labeling Data, must be used.

ED_004144A_00000101-00134

TABLE 5. CODES FOR LABELING DATA[1,2,3,4]

Sample	Sample Number
Sample in SDG (TCLP/SPLP Leachate included)	XXXXXX
Sample or Laboratory QC Not Part of the SDG	ZZZZZZ
Duplicate	XXXXXXD
Matrix Spike	XXXXXXS
Serial Dilution	XXXXXXL
Post-Digestion/Distillation Spike	XXXXXXA
Instrument Calibration Standards	S##
Initial Calibration Verification	ICV
Initial Calibration Blank	ICB
Continuing Calibration Verification	CCV###
Continuing Calibration Blank	CCB###
Interference Check Samples:	
Solution A	ICSA
Solution AB	ICSAB
Laboratory Control Sample	LCS###
Preparation Blank (Aqueous/Water)	PBW###
Preparation Blank (Soil/Sediment)	PBS###
Preparation Blank (Wipe)	PBF###
Leachate Extraction Blank	LEB###
ICP-MS Tune Check	TUNE

Footnotes:

[1] Instrument QC samples must not be reported as ZZZZZZ.

[2] For samples received under the CLP for inorganic analyses, the sample number will begin with an "M".

[3] The suffix that follows the "S" for the standards indicates the sequence number of the standard analysis. Beginning with S01 and continuing to the last standard analyzed.

[4] Within an analytical method, the three-character suffix (###) shall be unique for each instance of each sample type within an SDG. The Contractor may achieve this by replacing the suffix with one to three alpha-numeric characters.

3.3.7.2 These sample numbers shall be listed on the form in ascending alphanumeric order. Thus, if MA1111 is the lowest (considering both alpha and numeric characters) EPA Sample Number within the SDG, it would be entered in the first EPA Sample Number field. Samples would be listed below it, in ascending sequence - MA1111, MA1111D, MAB124, MAB125, MAC111, etc.

3.3.8 "Matrix" is the matrix of the sample. Enter "Soil" for soil/sediment samples, "Water" for aqueous/water and leachate samples, and "Wipe" for wipes, as appropriate.

ED_004144A_00000101-00135

3.3.9 "Analytical Method" is the method used to analyze the sample. Enter "ICP-AES", "ICP-MS", "CVAA", or "Spectrophotometry", as appropriate.

3.3.10 "Run Batch" is the unique identifier of the analytical sequence from the EDD. Report the RunBatch identifier for the Analytical Sequence reported on the form.

3.3.11 "Preparation Batch" is the unique identifier of the preparation batch from the EDD. Report the PreparationBatch identifier for the preparation reported on the form.

3.3.12 "Preparation Method" is the method used to prepare the samples for analysis. Report the preparation method reported on the form as specified below:

200.7: ICP-AES aqueous/water samples
200.8: ICP-MS aqueous/water samples and soil/sediment samples
3050B: ICP-AES soil/sediment samples and ICP-AES wipe samples
7470A: Mercury aqueous/water samples
7471B: Mercury soil/sediment samples
Midi-distillation_Aqueous: Cyanide aqueous/water samples
Midi-distillation_Soil: Cyanide soil/sediment samples
Micro-distillation_Aqueous: Cyanide aqueous/water samples
Micro-distillation_Soil: Cyanide soil/sediment samples

3.3.13 "Concentration Units" are the units in which the analytical result is reported. Enter "µg/L", "mg/L", "mg/kg", or "µg" as appropriate.

3.3.14 "%Solids" is the percent solids of the soil/sediment sample as determined by the procedure in Exhibit D - General Inorganic Analysis.

3.3.15 "Instrument ID" is the unique identifier of the instrument with which analysis is performed.

3.3.16 "Analyte" is identified in Exhibit C - Inorganic Target Analyte List and Contract Required Quantitation Limits, and must be reported in the order given in Exhibit C.

3.4 Reporting Forms

3.4.1 SDG Cover Page

3.4.1.1 Purpose

This form is used to list all samples analyzed within an SDG and provide certain analytical information and general comments. It is also the document that is signed by the Laboratory Manager or designee to authorize and release all data and deliverables associated with the SDG.

3.4.1.2 Instructions

Complete the header information according to the instructions in Exhibit B, Section 3.3. Complete the remainder of the form using the following instructions.

3.4.1.2.1 For samples analyzed using this SOW, enter "ISM02.4" for the SOW Number.

3.4.1.2.2 Under column "EPA Sample No.", enter each EPA Sample Number.

3.4.1.2.3 Under column "Lab Sample ID", enter each Laboratory sample identifier.

ED_004144A_00000101-00136

3.4.1.2.4 Under column "Analysis Method", enter an "X" under each Analytical Method scheduled for analysis for each EPA Sample Number.

3.4.1.2.5 Each SDG Cover Page shall be signed and dated, in original, by the Laboratory Manager or the Manager's designee to authorize the release and verify the contents of all data and deliverables associated with an SDG.

3.4.2 Inorganic Analysis Data Sheet [Form 1-IN]

3.4.2.1 Purpose

This form is used to tabulate and report sample analysis results for inorganic target analytes per analytical method (see Exhibit C - Inorganic Target Analyte List and Contract Required Quantitation Limits).

3.4.2.2 Instructions

Complete the header information according to the instructions in Exhibit B, Section 3.3. Complete the remainder of the form using the following instructions.

3.4.2.2.1 "Lab Sample ID", enter the Laboratory sample identifier.

3.4.2.2.2 "Date Received" is the date (formatted MM/DD/YYYY) of sample receipt at the laboratory, as recorded on the TR/COC Record (i.e., the VTSR).

3.4.2.2.3 Under column "CAS No.", enter the Chemical Abstracts Service (CAS) Number for each analyte as listed in Exhibit C - Inorganic Target Analyte List and Contract Required Quantitation Limits.

3.4.2.2.4 Under column "Concentration", enter for each analyte, the value of the result if the concentration or mass is greater than or equal to the MDL adjusted if necessary and corrected for any dilutions. If the concentration is less than the adjusted MDL enter the CRQL for the analyte, adjusted if necessary and corrected for any dilutions.

3.4.2.2.5 Under column "Q", enter result qualifiers as identified below. If additional qualifiers are used, their explicit definitions shall be included in the SDG Narrative.

3.4.2.2.5.1 The MDL obtained for a given preparation method, analysis method, and instrument shall be used for the qualification of the results for samples associated with that preparation method, analysis method, and instrument. Serial dilution and post-digestion/distillation spike results shall be qualified using the MDL and CRQL values utilized for the corresponding field sample.

All three values (i.e., the instrument reading, CRQL, and MDL) shall be converted to the same units prior to determining the appropriate qualifier.

3.4.2.2.5.2 Specified entries and their meanings are as follows:

X: The reported value is estimated due to interferences.

*: QC analyses are outside control limits.

D: The reported value is from a dilution.

ED_004144A_00000101-00137

J: The reported value was less than the CRQL, but greater than or equal to the MDL.

U: The result was less than the MDL. For Hardness, if the results for both Ca and Mg were less than their respective MDLs.

3.4.2.2.6 Under column "Date Analyzed", for each analyte reported, enter the date of the analysis the result is being reported from as MM/DD/YYYY.

3.4.2.2.7 Under column "Time Analyzed", for each analyte reported, enter the time of the analysis the result is being reported from in military time (HHMM).

3.4.2.2.8 In the "Comments" field, note any significant changes that occur during sample preparation (e.g., emulsion formation), any sample-specific comments concerning the analyte results, and any raw instrument results that are less than the negative CRQL (-CRQL). These notes shall also be included the SDG Narrative.

3.4.3 Initial and Continuing Calibration Verification [Form 2-IN]. This form is not required for Level 2a deliverables.

3.4.3.1 Purpose

This form is used to report analyte recoveries from calibration verification solutions.

3.4.3.2 Instructions

Complete the header information according to the instructions in Exhibit B, Section 3.3. Complete the remainder of the form using the following instructions.

3.4.3.2.1 "Initial Calibration Verification Source" and the "Continuing Calibration Verification Source" identify the manufacturer and the solution (lot) used.

Use additional Form(s) 2-IN if more calibration verification sources were used.

3.4.3.2.2 Under column "Initial Calibration Verification", enter the following:

3.4.3.2.2.1 "ID", enter the EPA Sample Number of the ICV reported on the form.

3.4.3.2.2.2 Under column "True", enter the expected concentration or true amount of each analyte in the ICV Solution.

3.4.3.2.2.3 Under column "Found", enter the concentration of each analyte measured in the ICV Solution.

3.4.3.2.2.4 Under column "%R", enter the percent Recovery (%R) (to the nearest whole number) calculated using the following equation:

EQ. 1 ICV Percent Recovery

$$\%R = \frac{\text{Found(ICV)}}{\text{True(ICV)}} \times 100$$

WHERE,

Found(ICV) = The found concentration of the analyte in the ICV Solution

True (ICV) = The true amount of the analyte in the ICV Solution

3.4.3.2.2.5 Under column "%RSD", enter the percent Relative Standard Deviation (%RSD) (to the nearest whole number) of the replicates for ICP-AES and ICP-MS analysis. Leave this column blank for Hg and CN analysis.

3.4.3.2.2.5.1 Calculate the %RSD from all replicate integrations using the following equation:

EQ. 2 Percent Relative Standard Deviation Calculation

$$\%RSD = \frac{SD}{\overline{X}} \times 100$$

WHERE,

SD = Standard deviation of ICV replicates (per analyte) from EQ. 3

$\overline{X}$ = Mean value of the ICV replicates (per analyte) from EQ. 4

3.4.3.2.2.5.2 Equation 3 is the general formula for Standard Deviation (SD) for a statistically small set of values.

EQ. 3 Standard Deviation Calculation

$$SD = \sqrt{\frac{\sum_{i=1}^{n} (X_i - \overline{X})^2}{(n-1)}}$$

WHERE,

X_i = Each individual value used to calculate the mean

$\overline{X}$ = The mean of n values from EQ. 4

n = Total number of values

3.4.3.2.2.5.3 Equation 4 is the general formula for the mean of a set of values ($\overline{X}$).

EQ. 4 Mean Value Calculation

$$\overline{X} = \frac{\sum_{i=1}^{n} X_i}{n}$$

WHERE,

X_i = Each individual value used to calculate the mean

n = Total number of values

3.4.3.2.3 Under column "Continuing Calibration Verification", enter the following:

3.4.3.2.3.1 "ID", enter the EPA Sample Numbers of the CCVs reported on the form.

3.4.3.2.3.2 Under column "True", enter the expected concentration or true amount of each analyte in the CCV Solution.

3.4.3.2.3.3 Under column "Found", enter the concentration of each analyte measured in the CCV Solution.

ED_004144A_00000101-00139

3.4.3.2.3.4 Under column "%R", enter the percent recovery (to the nearest whole number) calculated using the following equation:

EQ. 5 CCV Percent Recovery

$$\%R = \frac{\text{Found(CCV)}}{\text{True(CCV)}} \times 100$$

WHERE,

Found(CCV) = The found concentration of the analyte in the CCV Solution

True(CCV) = The true amount of the analyte in the CCV Solution

3.4.3.2.3.5 Under column "%RSD", enter the %RSD (to the nearest whole number) of the replicates for each CCV for ICP-AES and ICP-MS analysis. Calculate the value using Equation 2 with the CCV replicates. Leave these columns blank for Hg and CN analysis.

3.4.3.2.4 The order of reporting ICVs and CCVs for each analyte shall follow the chronological order in which the standards were analyzed. Start with the first Form 2-IN and report from the left to the right, continuing to the following Form(s) 2-IN as appropriate. For example, the first ICV shall be reported on the first Form 2-IN.

In an analytical sequence where three CCVs were analyzed, the first CCV shall be reported in the left CCV column on the first Form 2-IN and the second CCV shall be reported in the right column of the same form. The third CCV shall be reported in the left CCV column of the second Form 2-IN. On the second Form 2-IN, the ICV column and the right CCV column shall be left empty in this example. In the previous example, if a second analytical sequence for an analyte was needed, the ICV of that analytical sequence shall be reported on a third Form 2-IN and the CCVs follow in the same fashion as explained before.

NOTE: In the case where two wavelengths are used for an analyte, all ICV and CCV results of one wavelength from all analyses shall be reported before proceeding to report the results of the second wavelength used.

3.4.4 Blanks [Form 3-IN]. For Level 2a deliverables, only Preparation Blank data is required.

3.4.4.1 Purpose

This form is used to report analyte concentrations found in the Initial Calibration Blank (ICB), Continuing Calibration Blank (CCB), Preparation Blank, and Leachate Extraction Blank (LEB).

3.4.4.2 Instructions

Complete the header information according to the instructions in Exhibit B, Section 3.3. Complete the remainder of the form using the following instructions.

3.4.4.2.1 "Preparation Blank Matrix", enter appropriate matrix (water, soil, or wipe). No abbreviations or other matrix descriptors may be used.

ED_004144A_00000101-00140

3.4.4.2.2 "Preparation Blank Concentration Units", enter appropriate concentration units (µg/L for water, mg/L for TCLP leachates, mg/kg for soil, or µg for wipes).

3.4.4.2.3 Under column "Initial Calibration Blank", enter the following:

3.4.4.2.3.1 "ID", enter the EPA Sample Number of the ICB reported on the form.

3.4.4.2.3.2 Under "Initial Calibration Blank", enter the concentration of each analyte in the most recent ICB.

3.4.4.2.3.2.1 Enter the concentration or mass (positive or negative) for each analyte, if the absolute value of the concentration or mass is greater than or equal to the appropriate MDL. Enter the CRQL value for the analyte, if the absolute value of the concentration or mass is less than the appropriate MDL.

3.4.4.2.3.2.2 Under column "Q", enter "J" if the absolute value of the analyte concentration is less than the CRQL for aqueous/water but greater than or equal to the MDL (in µg/L) determined for the default aqueous/water preparation method on that particular instrument.

For prepared calibration blanks (e.g., mercury and cyanide), the CRQL for aqueous/water, and the MDL (in µg/L or converted to µg/L) for the preparation method, analysis, and instrument shall be used.

Enter "U" if the absolute value of the analyte in the blank is less than the MDL (in µg/L or converted to µg/L) obtained from the default aqueous/water preparation method on that instrument (unprepared blanks) or determined for the preparation method (prepared blanks).

3.4.4.2.4 Under column "Continuing Calibration Blank", enter the following:

3.4.4.2.4.1 "ID", enter the EPA Sample Numbers of the CCBs reported on the form.

3.4.4.2.4.2 Under "Continuing Calibration Blank", enter the concentration of each analyte detected in the first required CCB analyzed after the ICB.

3.4.4.2.4.2.1 Enter the concentration or mass (positive or negative) for each analyte, if the absolute value of the concentration or mass is greater than or equal to the appropriate MDL. Enter the CRQL value for the analyte, if the absolute value of the concentration or mass is less than the appropriate MDL.

3.4.4.2.4.2.2 Under column "Q", enter any appropriate qualifier, as explained in Section 3.4.4.2.3.2.2.

3.4.4.2.5 Under column "Preparation Blank/Leachate Extraction Blank", enter the following:

3.4.4.2.5.1 "ID", enter the EPA Sample Number of the Preparation Blank or LEB reported on the form.

3.4.4.2.5.2 Under "Preparation Blank/Leachate Extraction Blank", enter the concentration of each analyte in the Preparation Blank or LEB.

ED_004144A_00000101-00141

3.4.4.2.5.2.1 Enter the concentration or mass (positive or negative) for each analyte, if the absolute value of the concentration or mass is greater than or equal to the appropriate MDL. Enter the CRQL value for the analyte, if the absolute value of the concentration or mass is less than the appropriate MDL.

3.4.4.2.5.2.2 Under the column "Q", enter the appropriate qualifier, as explained in Section 3.4.4.2.3.2.2.

3.4.4.2.6 The order of reporting ICBs and CCBs for each analyte shall follow the chronological order in which the blanks were analyzed, starting with the first Form 3-IN and reporting from left to right and continuing to additional Form(s) 3-IN. If LEBs are analyzed, they shall be reported on a separate Form 3-IN from any Preparation Blanks.

NOTE: In the case where two wavelengths are used for an analyte, all ICB, CCB, and Preparation Blank and LEB results of one wavelength from all analyses shall be reported before proceeding to report the results of the second wavelength used.

3.4.5 ICP Interference Check Sample [Form 4-IN]. This form is not required for Level 2a deliverables.

3.4.5.1 Purpose

This form is used to report ICS results for each ICP-AES or ICP-MS instrument used in SDG analyses.

3.4.5.2 Instructions

Complete the header information according to the instructions in Exhibit B, Section 3.3. Complete the remainder of the form using the following instructions.

3.4.5.2.1 "ICSA Source" and "ICSB Source", identify the manufacturer and the solution (lot) used. For EPA solutions, include the source name and number (e.g., ICSA-1206) as provided in the accompanying solution instructions.

3.4.5.2.2 Under column "True ICSA", enter the expected concentration or true amount of each analyte present in ICSA. Enter "0" for each analyte with no specified true value in ICSA.

3.4.5.2.3 Under column "True ICSAB", enter the expected concentration or true amount of each analyte present in ICSAB. Enter "0" for each analyte with no specified true value in ICSAB.

3.4.5.2.4 Under column "Found ICSA", enter the measured concentration (positive, negative, or zero) for each analyte and interferent. Enter the concentration of each analyte and interferent for ICP-AES, and of each analyte and interferent for ICP-MS in the initial analysis of ICSA as required in Exhibit D. For ICP-MS, do not enter the interferent elements carbon, chloride, molybdenum, phosphorus, sulfur, and titanium. Report as provided in the instructions accompanying the material.

3.4.5.2.5 Under column "Found ICSA %R", enter the value of the percent recovery (to the nearest whole number) calculated for True ICSA greater than zero using the following equation. If "True ICSA" equals zero, leave field blank.

ED_004144A_00000101-00142

EQ. 6 ICSA Percent Recovery

$$\%R = \frac{\text{Found (ICSA)}}{\text{True (ICSA)}} \times 100$$

WHERE,

Found(ICSA) = The found concentration of the analyte in the ICSA Solution

True(ICSA) = The true amount of the analyte in the ICSA Solution

3.4.5.2.6 Under column "Found ICSAB", enter the measured concentration (positive, negative, or zero) for each analyte and interferent. Enter the concentration of each analyte and interferent for ICP-AES, and of each analyte and interferent for ICP-MS in the initial analysis of ICSB as required in Exhibit D. For ICP-MS, do not enter the interferent elements carbon, chloride, molybdenum, phosphorus, sulfur, and titanium. Report as provided in the instructions accompanying the material.

3.4.5.2.7 Under column "Found ICSAB %R", enter the percent recovery (to the nearest whole number) calculated for True ICSAB greater than zero using the following equation. If "True ICSAB" equals zero, leave field blank.

EQ. 7 ICSAB Percent Recovery

$$\%R = \frac{\text{Found (ICSAB)}}{\text{True (ICSAB)}} \times 100$$

WHERE,

Found (ICSAB) = The found concentration of the analyte in the ICSAB Solution

True (ICSAB) = The true amount of the analyte in the ICSAB Solution

3.4.5.2.8 If more ICS analyses were required, submit additional Form(s) 4-IN as appropriate.

3.4.5.2.8.1 The order of reporting ICSs for each analyte shall follow the chronological order in which the standards were analyzed, starting with the first Form 4-IN and continuing to the following Form(s) 4-IN as appropriate.

NOTE: In the case where two wavelengths are used for an analyte, all ICSA and ICSAB results of one wavelength from all analyses shall be reported before proceeding to report the results of the second wavelength used.

3.4.6 Matrix Spike Sample Recovery [Form 5A-IN]

3.4.6.1 Purpose

This form is used to report results for the pre-digestion/ distillation spike.

3.4.6.2 Instructions

Complete the header information according to the instructions in Exhibit B, Section 3.3. Complete the remainder of the form using the following instructions.

ED_004144A_00000101-00143

3.4.6.2.1 Under column "Control Limit %R", enter "75-125" if the sample result is less than or equal to four times the Spike Added (SA) value. If the sample result is greater than four times the SA value, leave this field empty.

3.4.6.2.2 Under column "Spiked Sample Result (SSR)", enter the measured value, in appropriate units, for each relevant analyte in the matrix spike sample. Enter the value of the result if the concentration is greater than or equal to the MDL adjusted if necessary and corrected for any dilutions; or enter the CRQL for the analyte, adjusted if necessary and corrected for any dilutions if the concentration is less than the adjusted MDL.

3.4.6.2.3 Under column "Q", enter the result qualifier as identified in Section 3.4.2.2.5.

3.4.6.2.4 Under column "Sample Result (SR)", enter the measured value for each required analyte in the sample (reported in "EPA SAMPLE NO." box) on which the matrix spike was performed. Enter the value of the result if the concentration is greater than or equal to the MDL adjusted if necessary and corrected for any dilutions; or enter the CRQL for the analyte, adjusted if necessary and corrected for any dilutions, if the concentration is less than the adjusted MDL.

3.4.6.2.5 Under column "Q", enter the result qualifier as identified in Section 3.4.2.2.5.

3.4.6.2.6 Under column "Spike Added (SA)", enter the expected concentration or true amount of each analyte added to the sample. The same concentration units shall be used for "SSR", "SR", and "SA". If the "SA" concentration is specified in the contract, then the value added and reported shall be the specific concentration, corrected for spiked sample weight and percent solids or spiked sample volume.

3.4.6.2.7 Under column "%R", enter the percent recovery (to the nearest whole number) for all spiked analytes calculated using the following equation. The percent recovery shall be reported, whether it is negative, positive, or zero.

EQ. 8 Spike Percent Recovery

$$\%R = \frac{SSR - SR}{SA} \times 100$$

WHERE,

SSR = Spiked Sample Result (µg/L or mg/kg)
SR = Sample Result (original) (µg/L or mg/kg). When the sample concentration is less than the MDL, use SR=0.
SA = Spike Added Theoretical Result (µg/L or mg/kg)

3.4.6.2.8 Under column "Q", enter "*" if the Spike Percent Recovery (%R) is out of the control limits (75-125%) and the Sample Result (SR) is less than or equal to four times the SA.

3.4.6.2.9 If different samples were used for spike sample analysis of different analytes, additional Form(s) 5A-IN shall be submitted for each sample as appropriate.

3.4.6.2.9.1 In the instance where there is more than one spike sample per matrix, per SDG, if one spike sample recovery is not within contract criteria, then flag all the samples of the same matrix and method in the SDG.

ED_004144A_00000101-00144

3.4.7 Post-Digestion/Distillation Spike Sample Recovery [Form 5B-IN]

3.4.7.1 Purpose

This form is used to report results for the post-digestion/distillation spike recovery which is based upon the addition of a known quantity of analyte to an aliquot of the digested or distilled sample.

3.4.7.2 Instructions

Complete the header information according to the instructions in Exhibit B, Section 3.3. Complete the remainder of the form using the following instructions.

3.4.7.2.1 Under column "Control Limit %R", enter "75-125" if a Post-Digestion Spike was required for the analyte.

3.4.7.2.2 Under column "Spiked Sample Result (SSR)", enter the measured value for each analyte in the post-digestion/distillation spike sample. Enter the value of the result if the concentration is greater than or equal to the MDL adjusted if necessary and corrected for any dilutions; or enter the CRQL for the analyte, adjusted if necessary and corrected for any dilutions if the concentration is less than the adjusted MDL.

3.4.7.2.3 Under column "Q", enter the result qualifier as identified in Section 3.4.2.2.5.

3.4.7.2.4 Under column "Sample Result (SR)", enter the measured value for the concentration of each analyte in the sample (reported in "EPA SAMPLE NO." box) on which the spike was performed. Enter the value if the concentration is greater than or equal to the MDL adjusted if necessary and corrected for any dilutions; or enter the CRQL for the analyte, adjusted if necessary and corrected for any dilutions if the concentration is less than the adjusted MDL.

3.4.7.2.5 Under column "Q", enter the result qualifier as identified in Section 3.4.2.2.5.

3.4.7.2.6 Under column "Spike Added (SA)", enter the expected concentration or true amount of each analyte added to the sample. If the "SA" concentration is specified in the contract, the value added and reported shall be that specific concentration.

3.4.7.2.7 Under column "%R", enter the percent recovery (to the nearest whole number) for all spiked analytes using the following equation. Percent recovery shall be reported, whether it is negative, positive, or zero.

EQ. 9 Post-Digestion/Distillation Spike Percent Recovery

$$\%R = \frac{SSR - SR}{SA} \times 100$$

WHERE,

SSR = Spiked Sample Result (µg/L or mg/kg)

SR = Sample Result (original) (µg/L or mg/kg). When the sample concentration is less than the MDL, use SR=0.

SA = Spike Added Theoretical Result (µg/L or mg/kg)

3.4.7.2.8 If different samples were used for spike sample analysis of different analytes, additional Form(s) 5B-IN shall be submitted for each sample as appropriate.

ED_004144A_00000101-00145

3.4.7.2.9 Under column "Q", enter "*" if the Spike %R is out of the control limits (75-125%).

3.4.8 Duplicates [Form 6-IN]

3.4.8.1 Purpose

The duplicates form is used to report results of duplicate analyses. Duplicate analyses are required for all analyte results.

3.4.8.2 Instructions

Complete the header information according to the instructions in Exhibit B, Section 3.3. Complete the remainder of the form using the following instructions.

3.4.8.2.1 Under column "Control Limit", enter the CRQL (corrected for the original sample weight and percent solids, if necessary) for the analyte if either the sample or duplicate value was less than 5 times the CRQL. If the sample and duplicate values were greater than or equal to 5 times the CRQL, or if the sample and duplicate values were less than the CRQL, leave the field empty.

3.4.8.2.2 Under column "Sample (S)", enter the measured value for the concentration of each analyte in the sample (reported in "EPA SAMPLE NO." box) on which a duplicate analysis was performed. Enter the value of the result if the concentration is greater than or equal to the MDL adjusted if necessary and corrected for any dilutions; or enter the CRQL for the analyte, adjusted if necessary and corrected for any dilutions, if the concentration is less than the adjusted MDL.

3.4.8.2.3 Under column "Q", enter the result qualifier as identified in Section 3.4.2.2.5.

3.4.8.2.4 Under column "Duplicate (D)", enter the measured value for each analyte in the duplicate sample. Enter the value of the result if the concentration is greater than or equal to the MDL adjusted if necessary and corrected for any dilutions; or enter the CRQL for the analyte, adjusted if necessary and corrected for any dilutions, if the concentration is less than the adjusted MDL.

3.4.8.2.5 Under column "Q", enter the result qualifier as identified in Section 3.4.2.2.5.

3.4.8.2.6 For soil/sediment samples, the concentration of the original sample shall be computed using the weight and percent solids of the original sample. The concentration of the duplicate sample shall be computed using the weight of the duplicate sample, but the percent solids of the original sample.

3.4.8.2.7 Under column "RPD", enter the absolute value (to the nearest whole number) of the Relative Percent Difference (RPD) for all analytes detected above the CRQL in either the sample or the duplicate, calculated using the following equation:

ED_004144A_00000101-00146

EQ. 10 Duplicate Sample Relative Percent Difference

$$RPD = \frac{|S - D|}{(S + D)/2} \times 100$$

WHERE,
S = Sample result
D = Duplicate result

If the analyte concentration is less than the MDL in either "S" or "D", a value of zero shall be substituted for "S" or "D". If the analyte concentration is less than the CRQL in both "S" and "D", leave the "RPD" field empty.

3.4.8.2.8 Under column "Q", enter "*" if the duplicate analysis for the analyte is outside control limits. If both sample and duplicate values are greater than or equal to 5 times the CRQL, then the RPD must be less than or equal to 20% to be in control. If either the sample or duplicate value is less than 5 times the CRQL, then the absolute difference between the sample and duplicate values shall be less than the CRQL to be in control. If both values are below the CRQL, then no control limit is applicable.

3.4.9 Laboratory Control Sample [Form 7-IN]

3.4.9.1 Purpose

This form is used to report results for the aqueous/water, soil/sediment, and wipe LCSs.

3.4.9.2 Instructions

Complete the header information according to the instructions in Exhibit B, Section 3.3. Complete the remainder of the form using the following instructions.

3.4.9.2.1 Under column "True", enter the value of the expected concentration or true amount of each analyte in the LCS.

3.4.9.2.2 Under column "Found", enter the concentration of each analyte found in the LCS.

3.4.9.2.3 Under column "%R", enter the percent recovery (to the nearest whole number) calculated using the following equation:

EQ. 11 LCS Percent Recovery

$$\%R = \frac{\text{Found (LCS)}}{\text{True (LCS)}} \times 100$$

WHERE,
Found (LCS) = The found concentration at each analyte in the LCS. If the analyte concentration is less than the MDL, a value of zero shall be substituted for the Found LCS.
True (LCS) = The true amount of each analyte in the LCS

3.4.9.2.4 Submit additional Form(s) 7-IN as appropriate if more than one LCS was required.

ED_004144A_00000101-00147

3.4.10 ICP-AES and ICP-MS Serial Dilutions [Form 8-IN]

3.4.10.1 Purpose

This form is used to report results for ICP-AES and ICP-MS serial dilutions.

3.4.10.2 Instructions

Complete the header information according to the instructions in Exhibit B, Section 3.3. Complete the remainder of the form using the following instructions.

3.4.10.2.1 Under column "Initial Sample Result (I)", enter the measured value, corrected for any dilutions, for each analyte. Enter the value if the concentration is greater than or equal to the adjusted MDL; or enter the adjusted CRQL if the concentration is less than the adjusted MDL.

3.4.10.2.2 Under column "Q", enter the result qualifier as identified in Section 3.4.2.2.5.

3.4.10.2.3 Under column "Serial Dilution Result (S)", enter the measured value for each analyte in the diluted sample. Enter the value if the concentration is greater than or equal to the adjusted MDL; or enter the adjusted CRQL if the concentration is less than the adjusted MDL.

3.4.10.2.4 Under column "Q", enter the result qualifier as identified in Section 3.4.2.2.5.

3.4.10.2.5 Under column "% Difference", enter the absolute value (to the nearest whole number) of the percent difference, between the original sample and the diluted sample (adjusted for dilution) using the following equation:

EQ. 12 Serial Dilution Percent Difference

$$\% \text{ Difference} = \frac{|I - S|}{I} \times 100$$

WHERE,

I = Initial sample result. If the analyte concentration is less than the MDL concentration, leave the "% Difference" field empty.

S = Serial dilution result. If the analyte concentration is less than the MDL, a value of zero shall be substituted for "S".

3.4.10.2.6 Under column "Q", enter "*" if the percent difference is greater than 10% and the original sample concentration (reported on Form 1-IN) is greater than 50 times the adjusted MDL.

3.4.11 Method Detection Limit [Form 9-IN]

3.4.11.1 Purpose

This form documents the MDL for each preparation method and instrument that the Contractor used to obtain data for the SDG. Only the methods, instruments, and wavelengths used to generate data for the SDG shall be included. A copy of the MDLs reported on Form(s) 9-IN shall be included with each CSF.

3.4.11.2 Instructions

Complete the header information according to the instructions in Exhibit B, Section 3.3. Complete the remainder of the form using the following instructions.

ED_004144A_00000101-00148

3.4.11.2.1 Under column "Wavelength/Mass", enter the wavelength in nanometers (nm) or the mass in atomic mass units (u) for each analyte for which an MDL has been established. If more than one wavelength or mass is used for an analyte, use additional Form(s) 9-IN as appropriate to report the MDLs.

3.4.11.2.2 Under column "MDL", enter the MDL as determined by the Contractor for each analyte analyzed by the instrument for which the ID is listed on this form.

When calculating MDL values, always round up to the appropriate significant figure (e.g., 14.81 rounds to 14.9 and 146.6 rounds to 147). This deviation from the rounding rule is necessary to prevent the reporting of detected values for results that fall in the noise region of the calibration curve.

NOTE: Zeroes used to set the decimal point in a number less than one are not significant, but all trailing zeroes are significant.

For example, a calculated MDL value of 0.074 µg/L will be reported as 0.074 and a calculated MDL value of 0.1 or 0.08 will be reported as 0.10 and 0.080, respectively.

3.4.11.2.3 The MDLs for Hardness, TCLP, or SPLP are not required to be reported.

3.4.11.2.4 Under column "Date Analyzed", enter the date analyzed (formatted as MM/DD/YYYY) for the analyte. Note that the date shall not exceed the analysis dates in the CSF or precede them by more than one year.

3.4.12 ICP-AES Interelement Correction Factors [Form 10A-IN]. This form is not required for Level 2a deliverables.

3.4.12.1 Purpose

This form documents for each ICP-AES instrument the IEC factors applied by the Contractor to obtain data for the SDG. A copy of the results of the IEC factors shall be included with each CSF on Form 10A-IN and Form 10B-IN as appropriate.

3.4.12.2 Instructions

Complete the header information according to instructions in Exhibit B, Section 3.3. Complete the remainder of the form using the following instructions.

3.4.12.2.1 "Date", enter the date (formatted as MM/DD/YYYY) on which these correction factors were determined for use.

3.4.12.2.2 Under column "Wavelength", enter the wavelength in nm used for each ICP-AES analyte. If more than one wavelength is used, submit additional Form(s) 10A-IN or Form(s) 10B-IN as appropriate.

3.4.12.2.3 Under columns "Al", "Ca", "Fe", and "Mg", enter the correction factor (negative, positive, or zero) for each ICP-AES analyte to the number of decimal places stored by the instrument and used for correcting the analyte results. Correction factors for one additional analyte shall be reported using the empty column and list the analyte's chemical symbol in the blank two-space header field provided for that column.

ED_004144A_00000101-00149

3.4.12.2.4 If corrections are not applied for an analyte, a zero [0] shall be entered for that analyte to indicate that the corrections were determined to be zero. Correction factors for more than one additional analyte shall be reported using Form 10B-IN.

NOTE: Correction factors for Al, Ca, Fe, and Mg are all required and are to be listed first (as they appear on Form 10A-IN).

3.4.13 ICP-AES Interelement Correction Factors [Form 10B-IN]. This form is not required for Level 2a deliverables.

3.4.13.1 Purpose

This form is used if correction factors for analytes other than Al, Ca, Fe, Mg, and one more analyte of the Contractor's choice were applied to the analytes analyzed by ICP-AES.

3.4.13.2 Instructions

Complete this form following the instructions for Form 10A-IN (see Exhibit B, Section 3.4.12) by listing the chemical symbol for additional analytes in the heading of the empty columns in the two-space fields provided.

3.4.13.2.1 Columns of correction factors for additional analytes shall be entered left to right starting on Form 10A-IN and proceeding to Form 10B-IN, according to the alphabetical order of their chemical symbols.

3.4.14 ICP-MS Internal Standard Association [Form 11-IN]. This form is not required for Level 2a deliverables.

3.4.14.1 Purpose

This form is used to report the associated internal standards for each target analyte for each ICP-MS instrument used in analysis.

3.4.14.2 Instructions

Complete the header information according to the instructions in Exhibit B, Section 3.3. Complete the remainder of the form using the following instructions.

3.4.14.2.1 "Date", enter the date (formatted as MM/DD/YYYY) on which the ICP-MS tune was performed. This date shall not exceed the dates of analysis by ICP-MS in the CSF.

3.4.14.2.2 Under column "Assoc. Internal Standard 1", enter the chemical symbol of the internal standard associated with each target analyte in the analytical sequence.

3.4.14.2.3 Under column "Assoc. Internal Standard 2", if a second internal standard is used for the analyte, then enter the chemical symbol of the second internal standard associated with each target analyte in the analytical sequence. Otherwise leave blank.

3.4.15 Analysis Log [Form 12-IN]. This form is not required for Level 2a deliverables.

3.4.15.1 Purpose

This form is used to report the analytical sequence.

ED_004144A_00000101-00150

3.4.15.1.1 An analytical sequence is defined as the totality of analyses performed by an instrument throughout the sequence initiated by, and including, the first SOW-required calibration standard or tune standard, and terminated by, and including, the CCV and CCB following the last SOW-required analytical sample.

3.4.15.1.2 All field samples and all QC analyses (including tunes, calibration standards, ICVs, CCVs, ICBs, CCBs, ICSs, LCSs, Preparation Blanks, LEBs, PE samples, duplicates, serial dilutions, matrix spikes, and post-digestion/distillation spikes) associated with the SDG shall be reported on Form 12-IN. The analytical sequence shall be continuous and inclusive of all analyses performed on the particular instrument during the analytical sequence.

3.4.15.1.3 Submit one Form 12-IN per analytical sequence. If more analyses were performed in the analytical sequence than will fit on one form, submit additional Form(s) 12-IN as appropriate.

3.4.15.1.4 The Analysis Logs shall be ordered chronologically. Each analytical sequence shall start on a separate Form 12-IN. Therefore, an instrument calibration or tune shall be the first entry on the form for each new analytical sequence. In addition, the analytical sequence is considered to have ended if it is interrupted for any reason, including termination for failing QC parameters.

3.4.15.2 Instructions

Complete the header information according to the instructions in Exhibit B, Section 3.3. Complete the remainder of the form using the following instructions.

3.4.15.2.1 "Start Date:", enter the date (formatted as MM/DD/YYYY) on which the analytical sequence was started.

3.4.15.2.2 "End Date:", enter the date (formatted as MM/DD/YYYY) on which the analytical sequence was ended.

3.4.15.2.3 Under column "EPA Sample No.", enter the EPA Sample Number of each analysis, including all QC operations applicable to the SDG (formatted according to Exhibit B, Table 5 - Codes for Labeling Data). All EPA Sample Numbers shall be listed in increasing chronological (date and time) order of analysis, continuing to the next Form 12-IN for the analytical sequence, if applicable. The analysis date and time of other analyses not associated with the SDG, but analyzed by the instrument in the reported analytical sequence, shall be reported. Those analyses shall be identified with the EPA Sample Number of "ZZZZZZ".

3.4.15.2.4 Under column "D/F", enter the dilution factor by which the final digestate or distillate needed to be diluted for each analysis to be performed. The dilution factor does not include the dilution inherent in the preparation as specified by the preparation procedures in Exhibit D. The dilution factor is required for all entries on Form 12-IN.

NOTE: For a particular sample, a dilution factor of "1.0" shall be entered if the digestate or distillate was analyzed without adding any further volume of dilutant.

ED_004144A_00000101-00151

3.4.15.2.5 For EPA-supplied solutions such as ICVs and ICSs, a dilution factor shall be entered if the supplied solution had to be diluted to a dilution different from that specified by the instructions provided with the solution. The dilution factor reported in such a case shall be that which would make the reported true values on the appropriate form for the solution equal to those that were supplied with the solution by the EPA. For instance, ICV-2(0887) has a true value of 104.0 µg/L at a 20-fold dilution. If the solution is prepared at a 40-fold dilution, a dilution factor of "2.0" shall be entered on Form 13-IN and the uncorrected instrument reading is compared to a true value of 52 µg/L. In this example, Form 2-IN will have a true value of 104.0 regardless of the dilution used. The found value for the ICV shall be corrected for the dilution listed on Form 12-IN using the following equation:

EQ. 13 ICV/CCV Correction for Dilution

$$\text{Found value on Form 2-IN} = \text{Instrument readout } (\mu g/L) \times D/F$$

WHERE,
D/F = Dilution Factor

3.4.15.2.6 Under column "Time", enter the time (in military format - HHMM) that each analysis was performed.

3.4.15.2.7 Under column "Analytes", enter the chemical symbol for each analyte reported (target and non-target) from the analytical sequence in alphabetical order by name. The Contractor is not required to report analytes (target or interferent) that are not analyzed in that analytical sequence. Enter "X" in the column of the designated analyte to indicate that the analyte value was used from the reported analysis to report data in the SDG. Leave the box empty if that analysis was not used to report the particular analyte.

3.4.15.2.7.1 Entering "X" appropriately is very important. The "X" is used to link the samples with their related QC. It also links the dilution factor with the appropriate result reported on Forms 1-IN - 8-IN. For each analyte result reported on any of the Forms 1-IN - 8-IN, there shall be one, and only one, properly identified entry on Form 12-IN for which an "X" is entered in the column for that analyte.

3.4.15.2.7.2 If, on Form 12-IN, an "X" is entered in the column for an analyte for a field sample associated with a dilution factor greater than 1.0, flag the data for that analyte with a "D" on the appropriate Form 1-IN.

3.4.16 ICP-MS Tune [Form 13-IN]. This form is not required for Level 2a deliverables.

3.4.16.1 Purpose

This form is used to report the tuning results for each ICP-MS instrument used in SDG analyses.

3.4.16.2 Instructions

Complete the header information according to the instructions in Exhibit B, Section 3.3. Complete the remainder of the form using the following instructions.

ED_004144A_00000101-00152

3.4.16.2.1 "Date:", enter the date (formatted as MM/DD/YYYY) the ICP-MS tune was performed. This date shall not exceed the dates of analysis by ICP-MS in the CSF.

3.4.16.2.2 Under column "Avg. Measured Mass (u)", enter the average mass calculated from the five or more tune integrations (in atomic mass units) measured for each isotope to one decimal point.

3.4.16.2.3 Under column "Avg. Peak Width (u)", enter the average peak width calculated from the analysis (in atomic mass units) at the percent of peak height recommended by the instrument manufacturer for each isotope to one decimal point.

3.4.16.2.4 Under column "%Height", enter the percent of peak height at which the Average Peak Width was measured to the nearest whole number.

3.4.16.2.5 Under column "%RSD", enter the percent Relative Standard Deviation of the absolute signals (intensities) for each isotope calculated from the five or more tune integrations using the following equation:

EQ. 14 Percent Relative Standard Deviation Calculation

$$\%RSD = \frac{SD}{\overline{X}} \times 100$$

WHERE,

SD = Standard deviation of Tune replicates (per isotope) from EQ. 3

$\overline{X}$ = Mean value of the Tune replicates (per isotope) from EQ. 4

3.4.17 ICP-MS Internal Standards Relative Intensity Summary [Form 14-IN]. This form is not required for Level 2a deliverables.

3.4.17.1 Purpose

This form is used to report the relative internal standard intensity levels during an ICP-MS analytical sequence. The relative intensity of each of the internal standards in all analyses performed by ICP-MS must be reported on the form.

3.4.17.2 Instructions

Complete the header information according to the instructions in Exhibit B, Section 3.3. Complete the remainder of the form using the following instructions.

3.4.17.2.1 "Start Date:", enter the date (formatted as MM/DD/YYYY) on which the analytical sequence was started.

3.4.17.2.2 For "End Date:", enter the date (formatted as MM/DD/YYYY) on which the analytical sequence was ended.

3.4.17.2.3 Under column "Time", enter the time (in military format - HHMM) that each analysis was performed.

3.4.17.2.4 Under column "Internal Standards %RI For:", enter the chemical symbol and elemental expression number of the internal standard in the "Element" header field provided to indicate the internal standard and elemental expression for which the Relative Intensity (RI) of the internal standards will be calculated in that column.

ED_004144A_00000101-00153

3.4.17.2.4.1 In the "Element" column, enter the internal standard relative intensity (to the nearest whole number) of the internal standard for each sample analysis listed on the form (excluding samples identified as "ZZZZZZ"). The internal standard percent relative intensity (%RI) is calculated using the following equation:

EQ. 15 Internal Standard Percent Relative Intensity

$$\%RI = \frac{I_n}{I_o} \times 100$$

WHERE,

I_o = The intensity of the internal standard in the blank calibration standard

I_n = The intensity of the internal standard in the EPA Sample Number

3.4.17.2.5 Under "Q" column to the right of each "Element" column, enter an "*" if the %RI for a field sample, PE, duplicate, or spike is less than 60 or greater than 125; otherwise leave the field empty.

3.4.17.2.6 Columns of internal standard RI must be entered left to right, starting with the internal standards of the lower mass on the first Form 14-IN and proceeding to the following Form 14-IN as appropriate. All Forms 14-IN for the lowest numeric instrument must be reported in ascending order by the Start Date before proceeding to the next Form 14-IN.

3.4.17.3 All field samples and all QC samples (including calibration standards, ICVs, CCVs, ICBs, CCBs, ICSs, LCS, Preparation Blanks, LEBs, serial dilutions, duplicates, PE samples, and spikes) associated with the SDG must be reported on Form 14-IN. The analytical sequence must be continuous and inclusive of all analyses performed on the particular instrument during the analytical sequence.

3.4.17.4 Submit one Form 14-IN per analytical sequence. If more analyses were performed in the analytical sequence, than will fit on one form, submit additional Form(s) 14-IN as appropriate. Each new analytical sequence must be started on the first line of Form 14-IN.

3.4.17.5 If more than one ICP-MS instrument or analytical sequence is used, submit additional Form(s) 14-IN as appropriate. All analytical sequences for the lowest alphanumeric instrument must be reported in ascending order before proceeding to the analytical sequences for the next highest instrument.

3.4.18 Initial Calibration [Form 15-IN]. This form is not required for Level 2a deliverables.

3.4.18.1 Purpose

This form is used to report instrument response and concentration data for each standard in the initial calibration of an instrument.

3.4.18.2 Instructions

Complete the header information according to the instructions in Exhibit B, Section 3.3. Complete the remainder of the form using the following instructions.

ED_004144A_00000101-00154

3.4.18.2.1 "Start Date:", enter the date (formatted as MM/DD/YYYY) that the calibration began.

3.4.18.2.2 Under column "True", enter the expected concentration or true amount of each analyte in the calibration standard or level. It is not required to enter a value for each analyte in every standard, so long as a value is entered for each concentration used to calibrate the instrument for the analyte.

3.4.18.2.3 Under column "Found", enter the measured concentration or amount of each analyte in the calibration standard obtained when the calibration standard was refitted to the calibration equation.

3.4.18.2.4 Under column "%D", enter the percent difference for each analyte at each concentration or amount used to calibrate the instrument other than the blank standard. Calculate the percent difference (reported to the nearest whole number) according to the following equation:

EQ. 16 Percent Difference

$$\%D = \frac{\text{Found} - \text{True}}{\text{True}} \times 100$$

WHERE,

True = The expected concentration in the calibration standard

Found = The measured concentration in the calibration standard when the response is refitted to the calibration equation

3.4.18.2.5 Since a minimum of six levels of calibration are required (a blank plus five standards), submit a minimum of two Forms 15-IN for each calibration performed. Submit a set of Forms 15-IN for each calibration performed for each instrument used to analyze samples.

3.4.19 Initial Calibration Summary [Form 16-IN]. This form is not required for Level 2a deliverables.

3.4.19.1 Purpose

This form is used to report instrument response and concentration data for each standard in the initial calibration of an instrument.

3.4.19.2 Instructions

Complete the header information according to the instructions in Exhibit B, Section 3.3. Complete the remainder of the form using the following instructions.

3.4.19.2.1 For "Start Date:", enter the date (formatted as MM/DD/YYYY) that the calibration began.

3.4.19.2.2 Under column "Corr. Coeff", enter the correlation coefficient calculated for the calibration curve for each analyte calibrated in that analytical sequence to at least four significant figures.

3.4.19.2.3 Under column "Slope", enter the calculated slope of the calibration curve for each analyte calibrated in that analytical sequence to at least three significant figures.

ED_004144A_00000101-00155

3.4.19.2.4 Under column "Intercept", enter the calculated intercept of the calibration curve for each analyte calibrated in that analytical sequence to at least three significant figures.

3.4.19.2.5 Under column "Calib. Type", enter the calibration type for each analyte calibrated. Report "Lin. Reg" for linear regression; "LR Blank" for linear regression with blank force; "WLR" for weighted linear regression; or "WLR Blank" for weighted linear regression with blank force, as appropriate.

3.4.19.2.6 Under column "Weighting", enter the weighting factor for the calibration curve for each analyte calibrated in that analytical sequence. Report "Inverse Conc" for the inverse of the concentration; "Inverse Square Conc" for the inverse square of concentration; "Variance" for variance; "Inverse Variance" for the inverse of the variance; "Standard Deviation" for standard deviation; "Inverse Stand Dev" for the inverse of the standard deviation; "Inverse Square Stand Dev" for the inverse square of the standard deviation; or "None" if no weighting factor was applied.

3.4.19.2.7 Submit one set of Forms 16-IN for each calibration performed for each instrument used to analyze samples in the reported SDG.

3.5 Sample Log-In Sheet [Form DC-1]

3.5.1 Purpose

This form is used to document the receipt and inspection of samples and containers. At least one original Form DC-1 is required for each sample shipping container (e.g., cooler). If the samples in a single sample shipping container must be assigned to more than one SDG, the original Form DC-1 shall be placed with the deliverables for the SDG that has the lowest alpha-numeric number and a copy of Form DC-1 shall be placed with the deliverables for the other SDG(s). The copies should be identified as "copy(ies)", and the location of the original should be noted on the copies.

3.5.2 Instructions

3.5.2.1 Sign and date the airbill. (If an airbill is not received, include a hardcopy receipt requested from the shipping company or a printout of the shipping company’s electronic tracking information).

3.5.2.2 Examine the shipping container and record the presence/absence of custody seals and their condition (i.e., intact, broken) in Item 1.

3.5.2.3 Record the custody seal numbers in Item 2.

3.5.2.4 Open the container, remove the enclosed sample documentation, and record the presence/absence of EPA forms (i.e., TR/COC Records, packing lists) and airbills or airbill stickers in Items 3 and 4. Specify if there is an airbill present or an airbill sticker in Item 4. Record the airbill or sticker number in Item 5.

3.5.2.5 Remove the samples from the shipping container(s), examine the samples and the Sample Tags (if present), and record the condition of the sample bottles (i.e., intact, broken, leaking) and presence or absence of Sample Tags in Items 6 and 7.

ED_004144A_00000101-00156

3.5.2.6 Record the presence or absence of a shipping container temperature indicator bottle in Item 8.

3.5.2.7 Record the shipping container temperature in Item 9. If ice is present, that shall be noted in the "Remarks" column.

3.5.2.8 Review the sample shipping documents and compare the information recorded on all the documents and samples and mark the appropriate answer in Item 10.

3.5.2.9 The log-in date should be recorded at the top of Form DC-1; record the date and time of shipping container receipt at the laboratory in Items 11 and 12.

3.5.2.10 If there are no problems observed during receipt, sign and date (include the time) Form DC-1 and the TR/COC Record, and write the sample numbers in the "EPA Sample #" column.

3.5.2.11 Record the pH for all aqueous/water samples received.

3.5.2.12 Record the appropriate Sample Tags and assigned laboratory numbers, if applicable.

3.5.2.13 Any comments should be made in the "Remarks" column.

3.5.2.14 For Items 1, 3, 4, 6, 7, 8, and 10, circle the appropriate response. Responses can be underlined if this form is completed by automated equipment. Unused columns and spaces shall be crossed out, initialed, and dated.

3.5.2.15 If there are problems observed during receipt (including samples that have not been preserved to the proper pH) or an answer marked with an asterisk (e.g., "absent*") was circled, contact SMO and document the contact as well as resolution of the problem on a CLP Communication Log and in the SDG Narrative. Following resolution, sign and date the forms as specified in the preceding paragraph and note, where appropriate, the resolution of the problem.

3.6 Full Inorganics Complete SDG File (CSF) Inventory Sheet [Form DC-2]

3.6.1 Purpose

The CSF Inventory Sheet is used to record both the inventory of CSF documents and the number of documents in the original Sample Data Package which is sent to the EPA Region.

3.6.2 Instructions

3.6.2.1 Organize all EPA-CSF documents as described in Exhibit B, Sections 2.0 and 3.0. Assemble the documents in Exhibit B, Section 2.0 in the order specified on Form DC-2, and stamp each page with the consecutive number. Inventory the CSF by reviewing the document numbers and recording page number ranges in the columns provided on Form DC-2. The Contractor shall verify and record in the "Comments" section on Form DC-2 all intentional gaps in the page numbering sequence (for example, "page numbers not used, XXXX-XXXX, XXXX-XXXX"). If there are no documents for a specific document type, enter an "NA" in the empty space.

3.6.2.2 Certain laboratory-specific documents related to the CSF may not fit into a clearly defined category. The laboratory should review Form DC-2 to determine if it is most appropriate to place them under Categories 66 through 68. Category 68 should be used if there is no appropriate previous category. These types of documents should be described or listed in the blanks under each appropriate category.

ED_004144A_00000101-00157

3.6.2.3 If it is necessary to insert new or inadvertently omitted documents, the Contractor shall follow these steps:

- Number all documents to be inserted with the next sequential numbers and file the inserts in their logical positions within the CSF (e.g., document to be inserted between pages 6 and 7 shall be numbered as 6a, 6b, 6c, etc.). Identify where the inserts are filed in the CSF by recording the document numbers and their locations under the "Other Records" section of Form DC-2 (e.g., documents to be inserted between pages 6 and 7 shall be numbered as 6a, 6b, 6c, etc.).

4.0 DATA REPORTING FORMS

The data reporting forms are shown on the following pages.

ED_004144A_00000101-00158

THIS PAGE INTENTIONALLY LEFT BLANK

ED_004144A_00000101-00159

EXHIBIT B

INORGANIC FORMS

THIS PAGE INTENTIONALLY LEFT BLANK

ED_004144A_00000101-00161

SDG COVER PAGE

Lab Name: _____ Contract: _____

Lab Code: _____ Case No.: _____ MA No.: _____ SDG No.: _____

SOW No.: _____

EPA Sample No.	Lab Sample ID	Analysis Method ICP-AES	ICP-MS	Mercury	Cyanide

I certify that this data package is in compliance with the terms and conditions of the contract, both technically and for completeness, for other than the conditions detailed in the SDG Narrative. Release of the data contained in this hardcopy Complete SDG File and in the electronic data submitted has been authorized by the Laboratory Manager or the Manager's designee, as verified by the following signature.

Signature: _____ Name: _____

Date: _____ Title: _____

ED_004144A_00000101-00162

EPA SAMPLE NO.

FORM 1-IN

INORGANIC ANALYSIS DATA SHEET

Lab Name: _____ Contract: _____

Lab Code: _____ Case No.: _____ MA No.: _____ SDG No.: _____

Matrix: _____ Lab Sample ID: _____

% Solids: _____ Date Received: _____

Analytical Method: _____

Concentration Units (µg/L, mg/L, mg/kg dry weight or µg): _____

CAS No.	Analyte	Concentration	Q	Date Analyzed	Time Analyzed

NOTE: Hardness (total) is reported in mg/L

Comments:

_____

_____

_____

ED_004144A_00000101-00163

FORM 2-IN

INITIAL AND CONTINUING CALIBRATION VERIFICATION

Lab Name: _____ Contract: _____

Lab Code: _____ Case No.: _____ MA No.: _____ SDG No.: _____

Initial Calibration Verification Source: _____

Continuing Calibration Verification Source: _____

Run Batch: _____ Analytical Method: _____

Concentration Units: µg/L

	Initial Calibration Verification				Continuing Calibration Verification						
	ID:				ID:				ID:		
Analyte	True	Found	%R	%RSD	True	Found	%R	%RSD	Found	%R	%RSD

ED_004144A_00000101-00164

FORM 3-IN

BLANKS

Lab Name: _____ Contract: _____

Lab Code: _____ Case No.: _____ MA No.: _____ SDG No.: _____

Preparation Blank Matrix: _____

Preparation Blank Concentration Units (µg/L, mg/L, mg/kg dry weight, or µg): _____

Analytical Method: _____ Preparation Batch: _____

Run Batch: _____ Preparation Method: _____

Analyte	Initial Calibration Blank (ug/L)		Continuing Calibration Blank (ug/L)						Preparation Blank/Leachate Extraction Blank	
	ID:	Q	ID:	Q	ID:	Q	ID:	Q	ID:	Q

ED_004144A_00000101-00165

FORM 4-IN

ICP INTERFERENCE CHECK SAMPLE

Lab Name: _____ Contract: _____

Lab Code: _____ Case No.: _____ MA No.: _____ SDG No.: _____

Analytical Method: _____ ICSA Source: _____

Instrument ID: _____ ICSB Source: _____

Run Batch: _____

Concentration Units: µg/L

Analyte	True		Found			
	ICSA	ICSAB	ICSA	%R	ICSAB	%R

ED_004144A_00000101-00166

EPA SAMPLE NO.

FORM 5A-IN

MATRIX SPIKE SAMPLE RECOVERY

Lab Name: _____ Contract: _____

Lab Code: _____ Case No.: _____ MA No.: _____ SDG No.: _____

Matrix: _____ Analytical Method: _____

% Solids: _____

Concentration Units (µg/L, mg/L or mg/kg dry weight): _____

Analyte	Control Limit %R	Spiked Sample Result (SSR)	Q	Sample Result (SR)	Q	Spike Added (SA)	%R	Q

ED_004144A_00000101-00167

EPA SAMPLE NO.

FORM 5B-IN
POST-DIGESTION/DISTILLATION SPIKE SAMPLE RECOVERY

Lab Name: _____ Contract: _____

Lab Code: _____ Case No.: _____ MA No.: _____ SDG No.: _____

Matrix: _____ Analytical Method: _____

% Solids: _____

Concentration Units (µg/L, mg/L or mg/kg dry weight): _____

Analyte	Control Limit %R	Spiked Sample Result (SSR)	Q	Sample Result (SR)	Q	Spike Added (SA)	%R	Q

ED_004144A_00000101-00168

EPA SAMPLE NO.

FORM 6-IN
DUPLICATES

Lab Name: _____ Contract: _____

Lab Code: _____ Case No.: _____ MA No.: _____ SDG No.: _____

Matrix: _____ Analytical Method: _____

% Solids: _____

Concentration Units (µg/L, mg/L, or mg/kg dry weight): _____

Analyte	Control Limit	Sample (S)	Q	Duplicate (D)	Q	RPD	Q

ED_004144A_00000101-00169

EPA SAMPLE NO.

FORM 7-IN

LABORATORY CONTROL SAMPLE

Lab Name: _____ Contract: _____

Lab Code: _____ Case No.: _____ MA No.: _____ SDG No.: _____

Matrix: _____ Preparation Method: _____

Analytical Method: _____ Preparation Batch: _____

Concentration Units (µg/L, mg/L, mg/kg dry weight, or µg): _____

Analyte	True	Found	%R

ED_004144A_00000101-00170

EPA SAMPLE NO.

FORM 8-IN

ICP-AES AND ICP-MS SERIAL DILUTIONS

Lab Name: _____ Contract: _____

Lab Code: _____ Case No.: _____ MA No.: _____ SDG No.: _____

Matrix: _____ Analytical Method: _____

% Solids: _____

Concentration Units (µg/L, mg/L or mg/kg dry weight): _____

Analyte	Initial Sample Result (I)	Q	Serial Dilution Result (S)	Q	% Difference	Q

ED_004144A_00000101-00171

FORM 9-IN

METHOD DETECTION LIMIT

Lab Name: _____ Contract: _____

Lab Code: _____ Case No.: _____ MA No.: _____ SDG No.: _____

Analytical Method: _____ Instrument ID: _____

Preparation Method: _____

Concentration Units (µg/L, µg, or mg/kg): _____

Analyte	Wavelength/Mass	MDL	Date Analyzed

ED_004144A_00000101-00172

FORM 10A-IN

ICP-AES INTERELEMENT CORRECTION FACTORS

Lab Name: _____ Contract: _____

Lab Code: _____ Case No.: _____ MA No.: _____ SDG No.: _____

Instrument ID: _____ Date: _____

Analyte	Wave-length (nm)	Interelement Correction Factors for: Al	Ca	Fe	Mg	____

ED_004144A_00000101-00173

FORM 10B-IN

ICP-AES INTERELEMENT CORRECTION FACTORS

Lab Name: _____ Contract: _____

Lab Code: _____ Case No.: _____ MA No.: _____ SDG No.: _____

Instrument ID: _____ Date: _____

Analyte	Wave-length (nm)	Interelement Correction Factors for: _____	_____	_____	_____	_____

ED_004144A_00000101-00174

FORM 11-IN

ICP-MS INTERNAL STANDARD ASSOCIATION

Lab Name: _____ Contract: _____

Lab Code: _____ Case No.: _____ MA No.: _____ SDG No.: _____

Instrument ID: _____ Date: _____

Run Batch: _____

Analyte	Assoc. Internal Standard 1	Assoc. Internal Standard 2

ED_004144A_00000101-00175

FORM 12-IN

ANALYSIS LOG

Lab Name: ______________________ Contract: ______________________

Lab Code: __________ Case No.: __________ MA No.: __________ SDG No.: __________

Instrument ID: ______________________ Analytical Method: ______________________

Start Date: ______________________ End Date: ______________________

Run Batch: ______________________

EPA Sample No.	D/F	Time	Analytes																									

EPA SAMPLE NO.

FORM 13-IN
ICP-MS TUNE

Lab Name: _____ Contract: _____

Lab Code: _____ Case No.: _____ MA No.: _____ SDG No.: _____

Instrument ID: _____ Date: _____

Run Batch: _____

Element - Mass	Avg. Measured Mass (u)	Average Peak Width (u)	%Height	%RSD
Be - 9				
Mg - 24				
Mg - 25				
Mg - 26				
Co - 59				
In - 113				
In - 115				
Pb - 206				
Pb - 207				
Pb - 208				

ED_004144A_00000101-00177

FORM 14-IN

ICP-MS INTERNAL STANDARDS RELATIVE INTENSITY SUMMARY

Lab Name: _____ Contract: _____

Lab Code: _____ Case No.: _____ MA No.: _____ SDG No.: _____

Instrument ID: _____ Start Date: _____

Run Batch: _____ End Date: _____

EPA Sample No.	Time	Internal Standards %RI For:									
		Element	Q	Element	Q	Element	Q	Element	Q	Element	Q

ED_004144A_00000101-00178

FORM 15-IN

INITIAL CALIBRATION

Lab Name: _____ Contract: _____

Lab Code: _____ Case No.: _____ MA No.: _____ SDG No.: _____

Instrument ID: _____ Start Date: _____

Analytical Method: _____ Run Batch: _____

Concentration Units: µg/L

Analyte	True	Found	%D	True	Found	%D	True	Found	%D

ED_004144A_00000101-00179

FORM 16-IN

INITIAL CALIBRATION SUMMARY

Lab Name: _____ Contract: _____

Lab Code: _____ Case No.: _____ MA No.: _____ SDG No.: _____

Instrument ID: _____ Start Date: _____

Analytical Method: _____ Run Batch: _____

Analyte	Corr. Coeff.	Slope	Intercept	Calib. Type	Weighting

ED_004144A_00000101-00180

FORM DC-1

SAMPLE LOG-IN SHEET

Lab Name		Page of
Received By (Print Name)		Log-in Date
Received By (Signature)		
Case Number	SDG No.	MA No.

Remarks:	
1. Custody Seal(s)	Present/Absent* Intact/Broken
2. Custody Seal Nos.	_____ _____
3. Traffic Reports/Chain of Custody Records or Packing Lists	Present/Absent*
4. Airbill	Airbill/Sticker Present/Absent*
5. Airbill No.	_____ _____
6. Sample Tags Sample Tag Numbers	Present/Absent* Listed/Not Listed on Traffic Report/Chain of Custody Record
7. Sample Condition	Intact/Broken*/ Leaking
8. Shipping Container Temperature Indicator Bottle	Present/Absent*
9. Shipping Container Temperature	_____
10. Does information on Traffic Reports/Chain of Custody Records and Sample Tags agree?	Yes/No*
11. Date Received at Lab	_____
12. Time Received	_____

	EPA Sample #	Aqueous/ Water Sample pH	Corresponding		Remarks: Condition of Sample Shipment, etc.
			Sample Tag #	Assigned Lab #	
1					
2					
3					
4					
5					
6					
7					
8					
9					
10					
11					
12					
13					
14					
15					
16					
17					
18					
19					
20					
21					
22					

* Contact SMO and attach record of resolution

Reviewed By	Logbook No.
Date	Logbook Page No.

ED_004144A_00000101-00181

FORM DC-2
FULL INORGANICS COMPLETE SDG FILE (CSF) INVENTORY SHEET

LAB NAME _____

LAB CODE _____

CONTRACT NO. _____

CASE NO. _____ SDG NO. _____

MA NO. _____

SOW NO. _____

All documents delivered in the Complete SDG File must be original documents where possible. (Reference - Exhibit B Section 2.4)

		PAGE NOs.		CHECK	
		FROM	TO	LAB	REGION
1.	SDG Cover Page				
2.	Traffic Report/Chain of Custody Record(s)				
3.	Sample Log-In Sheet (DC-1)				
4.	CSF Inventory Sheet (DC-2)				
5.	SDG Narrative				
Inorganic Analysis					
ICP-AES					
6.	Inorganic Analysis Data Sheet (Form 1-IN)				
7.	Initial and Continuing Calibration Verification (Form 2-IN)				
8.	Blanks (Form 3-IN)				
9.	ICP Interference Check Sample (Form 4-IN)				
10.	Matrix Spike Sample Recovery (Form 5A-IN)				
11.	Post-Digestion/Distillation Spike Sample Recovery (Form 5B-IN)				
12.	Duplicates (Form 6-IN)				
13.	Laboratory Control Sample (Form 7-IN)				
14.	ICP-AES and ICP-MS Serial Dilutions (Form 8-IN)				
15.	Method Detection Limit (Form 9-IN)				
16.	ICP-AES Interelement Correction Factors (Form 10A-IN)				
17.	ICP-AES Interelement Correction Factors (Form 10B-IN)				
18.	Analysis Log (Form 12-IN)				
19.	Initial Calibration (Form 15-IN)				

ED_004144A_00000101-00182

FORM DC-2
FULL INORGANICS COMPLETE SDG FILE (CSF) INVENTORY SHEET

		PAGE NOs.		CHECK	
		FROM	TO	LAB	REGION
20.	Initial Calibration Summary (Form 16-IN)				
21.	ICP-AES Raw Data				
22.	ICP-AES Preparation Log Books, Preparation records, Analysis records, and PE Instructions				
ICP MS					
23.	Inorganic Analysis Data Sheet (Form 1-IN)				
24.	Initial and Continuing Calibration Verification (Form 2-IN)				
25.	Blanks (Form 3-IN)				
26.	ICP Interference Check Sample (Form 4-IN)				
27.	Matrix Spike Sample Recovery (Form 5A-IN)				
28.	Post-Digestion/Distillation Spike Sample Recovery (Form 5B-IN)				
29.	Duplicates (Form 6-IN)				
30.	Laboratory Control Sample (Form 7-IN)				
31.	ICP-AES and ICP-MS Serial Dilutions (Form 8-IN)				
32.	Method Detection Limit (Form 9-IN)				
33.	ICP-MS Internal Standard Association (Form 11-IN)				
34.	Analysis Log (Form 12-IN)				
35.	ICP-MS Tune (Form 13-IN)				
36.	ICP-MS Internal Standards Relative Intensity Summary (Form 14-IN)				
37.	Initial Calibration (Form 15-IN)				
38.	Initial Calibration Summary (Form 16-IN)				
39.	ICP-MS Raw Data				
40.	ICP-MS Preparation Log Books, Preparation records, Analysis records, and PE Instructions				
Mercury					
41.	Inorganic Analysis Data Sheet (Form 1-IN)				
42.	Initial and Continuing Calibration Verification (Form 2-IN)				
43.	Blanks (Form 3-IN)				
44.	Matrix Spike Sample Recovery (Form 5A-IN)				
45.	Duplicates (Form 6-IN)				
46.	Method Detection Limit (Form 9-IN)				
47.	Analysis Log (Form 12-IN)				
48.	Initial Calibration (Form 15-IN)				

ED_004144A_00000101-00183

FORM DC-2
FULL INORGANICS COMPLETE SDG FILE (CSF) INVENTORY SHEET

49.	Initial Calibration Summary (Form 16-IN)	_____	_____	_____	_____
50.	Mercury Raw Data	_____	_____	_____	_____
51.	Mercury Preparation Log Books, Preparation records, Analysis records, and PE Instructions	_____	_____	_____	_____
Cyanide					
52.	Inorganic Analysis Data Sheet (Form 1-IN)	_____	_____	_____	_____
53.	Initial and Continuing Calibration Verification (Form 2-IN)	_____	_____	_____	_____
54.	Blanks (Form 3-IN)	_____	_____	_____	_____
55.	Matrix Spike Sample Recovery (Form 5A-IN)	_____	_____	_____	_____
56.	Post-Digestion/Distillation Spike Sample Recovery (Form 5B-IN)	_____	_____	_____	_____
57.	Duplicates (Form 6-IN)	_____	_____	_____	_____
58.	Method Detection Limit (Form 9-IN)	_____	_____	_____	_____
59.	Analysis Log (Form 12-IN)	_____	_____	_____	_____
60.	Initial Calibration (Form 15-IN)	_____	_____	_____	_____
61.	Initial Calibration Summary (Form 16-IN)	_____	_____	_____	_____
62.	Cyanide Raw Data	_____	_____	_____	_____
63.	Cyanide Preparation Log Books, Preparation records, Analysis records, and PE Instructions	_____	_____	_____	_____
Additional					
64.	Percent Solids Determination Log	_____	_____	_____	_____
65.	EPA Shipping/Receiving Documents	_____	_____	_____	_____
	Airbill (No. of Shipments _____)	_____	_____	_____	_____
	Sample Tags	_____	_____	_____	_____
	Sample Log-In Sheet (Lab)	_____	_____	_____	_____
66.	Misc. Shipping/Receiving Records (list all individual records) Communication Logs	_____	_____	_____	_____
	_____				
	_____	_____	_____	_____	_____
67.	Internal Lab Sample Transfer Records & Tracking Sheets (describe or list)	_____	_____	_____	_____
	_____				
	_____	_____	_____	_____	_____
68.	Other Records (describe or list)	_____	_____	_____	_____
	Communication Logs	_____	_____	_____	_____
	_____				
	_____	_____	_____	_____	_____

ED_004144A_00000101-00184

FORM DC-2
FULL INORGANICS COMPLETE SDG FILE (CSF) INVENTORY SHEET

69. Comments:

Completed by:
(CLP Lab)

(Signature)	(Print Name & Title)	(Date)

Audited by:
(EPA)

(Signature)	(Print Name & Title)	(Date)

ED_004144A_00000101-00185

EXHIBIT C

INORGANIC TARGET ANALYTE LIST AND
CONTRACT REQUIRED QUANTITATION LIMITS

NOTE: The Contract Required Quantitation Limit (CRQL) values listed on the following pages are based on the analysis of samples according to the specifications given in Exhibit D.

Changes to the CRQL may be requested under the Modified Analysis (MA) clause in the contract.

ED_004144A_00000101-00186

THIS PAGE INTENTIONALLY LEFT BLANK

ED_004144A_00000101-00187

Exhibit C - Inorganic Target Analyte List and Contract Required Quantitation Limits

Table of Contents

Section		Page
1.0	ICP-AES TARGET ANALYTE LIST AND CONTRACT REQUIRED QUANTITATION LIMITS	5
2.0	ICP-MS TARGET ANALYTE LIST AND CONTRACT REQUIRED QUANTITATION LIMITS	6
3.0	MERCURY BY COLD VAPOR ATOMIC ABSORPTION TARGET ANALYTE LIST AND CONTRACT REQUIRED QUANTITATION LIMITS	6
4.0	CYANIDE BY SPECTROPHOTOMETRY TARGET ANALYTE LIST AND CONTRACT REQUIRED QUANTITATION LIMITS	6

ED_004144A_00000101-00188

THIS PAGE INTENTIONALLY LEFT BLANK

ED_004144A_00000101-00189

1.0 ICP-AES TARGET ANALYTE LIST AND CONTRACT REQUIRED QUANTITATION LIMITS

TABLE 1. ICP-AES TARGET ANALYTE LIST AND CONTRACT REQUIRED QUANTITATION LIMITS[A]

		CRQL			
Analyte Name	**CAS Number**	**Water[D] (µg/L)**	**Soil[B] (mg/kg)**	**Wipe (µg)**	**TCLP (mg/L)**
Aluminum	7429-90-5	200	20	20	--
Antimony	7440-36-0	60	6	6	--
Arsenic	7440-38-2	10	1	1	5
Barium	7440-39-3	200	20	20	100
Beryllium	7440-41-7	5	0.5	0.5	--
Cadmium	7440-43-9	5	0.5	0.5	1
Calcium	7440-70-2	5000	500	500	--
Chromium	7440-47-3	10	1	1	5
Cobalt	7440-48-4	50	5	5	--
Copper	7440-50-8	25	2.5	2.5	--
Iron	7439-89-6	100	10	10	--
Lead	7439-92-1	10	1	1	5
Magnesium	7439-95-4	5000	500	500	--
Manganese	7439-96-5	15	1.5	1.5	--
Nickel	7440-02-0	40	4	4	--
Potassium	7440-09-7	5000	500	500	--
Selenium	7782-49-2	35	3.5	3.5	1
Silver	7440-22-4	10	1	1	5
Sodium	7440-23-5	5000	500	500	--
Thallium	7440-28-0	25	2.5	2.5	--
Vanadium	7440-62-2	50	5	5	--
Zinc	7440-66-6	60	6	6	--
Hardness (total)	Hardness	33[C]	--	--	--

ED_004144A_00000101-00190

2.0 ICP-MS TARGET ANALYTE LIST AND CONTRACT REQUIRED QUANTITATION LIMITS

TABLE 2. ICP-MS TARGET ANALYTE LIST AND CONTRACT REQUIRED QUANTITATION LIMITS[A]

Analyte Name	CAS Number	CRQL Water (µg/L)	CRQL Soil[B] (mg/kg)
Aluminum	7429-90-5	20	--
Antimony	7440-36-0	2	1
Arsenic	7440-38-2	1	0.5
Barium	7440-39-3	10	5
Beryllium	7440-41-7	1	0.5
Cadmium	7440-43-9	1	0.5
Calcium	7440-70-2	500	--
Chromium	7440-47-3	2	1
Cobalt	7440-48-4	1	0.5
Copper	7440-50-8	2	1
Iron	7439-89-6	200	--
Lead	7439-92-1	1	0.5
Magnesium	7439-95-4	500	--
Manganese	7439-96-5	1	0.5
Nickel	7440-02-0	1	0.5
Potassium	7440-09-7	500	--
Selenium	7782-49-2	5	2.5
Silver	7440-22-4	1	0.5
Sodium	7440-23-5	500	--
Thallium	7440-28-0	1	0.5
Vanadium	7440-62-2	5	2.5
Zinc	7440-66-6	2	1

3.0 MERCURY BY COLD VAPOR ATOMIC ABSORPTION TARGET ANALYTE LIST AND CONTRACT REQUIRED QUANTITATION LIMITS

TABLE 3. MERCURY BY COLD VAPOR ATOMIC ABSORPTION TARGET ANALYTE LIST AND CONTRACT REQUIRED QUANTITATION LIMITS

Analyte Name	CAS Number	CRQL Water[D] (µg/L)	CRQL Soil[B] (mg/kg)	TCLP (mg/L)
Mercury	7439-97-6	0.2	0.1	0.2

4.0 CYANIDE BY SPECTROPHOTOMETRY TARGET ANALYTE LIST AND CONTRACT REQUIRED QUANTITATION LIMITS

TABLE 4. CYANIDE BY SPECTROPHOTOMETRY TARGET ANALYTE LIST AND CONTRACT REQUIRED QUANTITATION LIMITS

Analyte Name	CAS Number	CRQL Water[D] (µg/L)	CRQL Soil[B] (mg/kg)
Cyanide	57-12-5	10	0.5

ED_004144A_00000101-00191

Endnotes:

A. Changes to the Inorganic Target Analyte List (TAL) (e.g., adding an additional analyte) may be requested under the Modified Analysis clause in the contract.

B. The CRQLs for soil/sediment are based on 100% solids and on the minimum weights and volumes specified in Exhibit D. The moisture content of the samples must be used to adjust the CRQL values appropriately.

C. Hardness (total) is reported as a calculation in mg/L.

D. Use the water CRQLs for Synthetic Precipitation Leaching Procedure (SPLP).

ED_004144A_00000101-00192

THIS PAGE INTENTIONALLY LEFT BLANK

ED_004144A_00000101-00193

EPA CONTRACT LABORATORY PROGRAM

STATEMENT OF WORK

FOR

ORGANIC SUPERFUND METHODS

Multi-Media, Multi-Concentration

SOM02.4
October 2016

STATEMENT OF WORK

TABLE OF CONTENTS

ORGANIC ABBREVIATIONS/ACRONYM LIST

EXHIBIT A: SUMMARY OF REQUIREMENTS

EXHIBIT B: REPORTING AND DELIVERABLES REQUIREMENTS

EXHIBIT C: ORGANIC TARGET ANALYTE LIST AND CONTRACT REQUIRED QUANTITATION LIMITS

EXHIBIT D: INTRODUCTION TO ORGANIC ANALYTICAL METHODS

EXHIBIT D: GENERAL ORGANIC ANALYSIS

EXHIBIT D: TRACE CONCENTRATIONS OF VOLATILE ORGANIC COMPOUNDS ANALYSIS

EXHIBIT D: LOW/MEDIUM CONCENTRATIONS OF VOLATILE ORGANIC COMPOUNDS ANALYSIS

EXHIBIT D: SEMIVOLATILE ORGANIC COMPOUNDS ANALYSIS

EXHIBIT D: PESTICIDES ANALYSIS

EXHIBIT D: AROCLORS ANALYSIS

EXHIBIT E: QUALITY SYSTEMS

EXHIBIT F: PROGRAMMATIC QUALITY ASSURANCE/QUALITY CONTROL ELEMENTS

EXHIBIT G: GLOSSARY OF TERMS

EXHIBIT H: FORMAT FOR ELECTRONIC DATA DELIVERABLES

ORGANIC ABBREVIATIONS/ACRONYM LIST	
ABBREVIATION/ACRONYM	DEFINITION
ASB	Analytical Services Branch
ASB CLP COR	Analytical Services Branch Contract Laboratory Program Contracting Officer's Representative
ASE	Accelerated Solvent Extractor
BFB	4-bromofluorobenzene
BNA	Base Neutral Acid
%Breakdown	Percent Breakdown
°C	Degrees Celsius (unit of measurement)
CAS	Chemical Abstracts Service
CCS	Contract Compliance Screening
CCV	Continuing Calibration Verification
CERCLA	Comprehensive Environmental Response, Compensation, and Liability Act of 1980
CF	Calibration Factor
CFR	Code of Federal Regulations
CLP	EPA Contract Laboratory Program
cm	Centimeter (unit of measurement)
CO	Contracting Officer
COC	Chain of Custody
COR	Contracting Officer's Representative
CRQL	Contract Required Quantitation Limit
CSF	Complete SDG File
%D	Percent Difference
DF	Dilution Factor
DFTPP	Decafluorotriphenylphosphine
DMC	Deuterated Monitoring Compound
DRD	Data Receipt Date
DTD	Document Type Definition
EDD	Electronic Data Deliverable
EI	Electron Ionization
EICP	Extracted Ion Current Profile
EPA	United States Environmental Protection Agency
EXES	Electronic Data Exchange and Evaluation System
g	Gram (unit of measurement)
GC	Gas Chromatography
GC/ECD	Gas Chromatograph/Electron Capture Detector
GC/MS	Gas Chromatograph/Mass Spectrometer
GPC	Gel Permeation Chromatography
HPLC	High Performance Liquid Chromatography
HRS	Hazard Ranking System
ICAL	Initial Calibration
ICV	Initial Calibration Verification
ID	Identifier
IPC	Instrument Performance Check
IR	Infrared
IUPAC	International Union of Pure and Applied Chemistry
K-D	Kuderna-Danish
L	Liter (unit of measurement)
Lab	Laboratory
lb	Pound (unit of measurement)
LCS	Laboratory Control Sample
LRD	Laboratory Receipt Date

ED_004144A_00000101-00196

ORGANIC ABBREVIATIONS/ACRONYM LIST	
ABBREVIATION/ACRONYM	DEFINITION
MA	Modified Analysis
MDL	Method Detection Limits
mg	Milligram (unit of measurement)
mL	Milliliter (unit of measurement)
mm	Millimeter (unit of measurement)
MS	Mass Spectrometry
MS	Matrix Spike
MSD	Matrix Spike Duplicate
MTBE	Methyl tert-butyl ether
µL	Microliter (unit of measurement)
µm	Micrometer (unit of measurement)
NCS	Non-Client Sample
ng	Nanogram (unit of measurement)
NIST	National Institute of Standards and Technology
OSHA	Occupational Safety and Health Administration
OSRTI	EPA Office of Superfund Remediation and Technology Innovation
PAH	Polynuclear Aromatic Hydrocarbon
PCP	Pentachlorophenol
PDF	Portable Document Format
PE	Performance Evaluation
PEM	Performance Evaluation Mixture
PFE	Pressurized Fluid Extraction
PFK	Perfluorokerosene
PRPs	Potentially Responsible Parties
Psi	Pounds Per Square Inch (unit of measurement)
P/T	Purge-and-trap
PT	Proficiency Testing
PTFE	Polytetrafluoroethylene
QA	Quality Assurance
QAPP	Quality Assurance Project Plan
QATS	Quality Assurance Technical Support
QC	Quality Control
QMP	Quality Management Plan
%R	Percent Recovery
RESC	Resolution Check Standard
RIC	Reconstructed Ion Chromatogram
RPM	Revolutions Per Minute (unit of measurement)
RRF	Relative Response Factor
RRT	Relative Retention Time
%RSD	Percent Relative Standard Deviation
RPD	Relative Percent Difference
RT	Retention Time
%S	Percent Solids
SA	Spike Added
SARA	Superfund Amendments and Reauthorization Act of 1986
SD	Standard Deviation
SDG	Sample Delivery Group
SEDD	Staged Electronic Data Deliverable
SICP	Selected Ion Current Profile
SIM	Selected Ion Monitoring
SMO	Sample Management Office

ED_004144A_00000101-00197

ORGANIC ABBREVIATIONS/ACRONYM LIST	
ABBREVIATION/ACRONYM	DEFINITION
SOP	Standard Operating Procedure
SOW	Statement of Work
SPLP	Synthetic Precipitation Leaching Procedure
SVOA	Semivolatile Organic Analyte
TAL	Target Analyte List
TBA	Tetrabutylammonium
TCLP	Toxicity Characteristic Leaching Procedure
TIC	Tentatively Identified Compound
TR	Traffic Report
TR/COC	Traffic Report/Chain of Custody
UTF-8	Unicode Transformation Format - 8 bit
UV	Ultraviolet
VOA	Volatile Organic Analyte
VOC	Volatile Organic Compound
VTSR	Validated Time of Sample Receipt
W3C	World Wide Web Consortium
XML	eXtensible Markup Language
ZHE	Zero Headspace Extraction

ED_004144A_00000101-00198

THIS PAGE INTENTIONALLY LEFT BLANK

ED_004144A_00000101-00199

EXHIBIT A

SUMMARY OF REQUIREMENTS

ED_004144A_00000101-00200

THIS PAGE INTENTIONALLY LEFT BLANK

ED_004144A_00000101-00201

Exhibit A - Summary of Requirements

Table of Contents

Section		Page
1.0	PURPOSE	5
2.0	DESCRIPTION OF SERVICE	5
3.0	DATA USES	5
4.0	SUMMARY OF REQUIREMENTS	5
4.1	Major Task Areas	6
5.0	SAMPLE RECEIPT AND HANDLING	7
5.1	Chain of Custody	7
5.2	Sample Scheduling	7
5.3	Sample Shipments	8
5.4	Sample Receipt	8
5.5	Sample Case	10

ED_004144A_00000101-00202

THIS PAGE INTENTIONALLY LEFT BLANK

ED_004144A_00000101-00203

1.0 PURPOSE

The purpose of this analytical service is to provide analytical data for use by the U.S. Environmental Protection Agency (EPA), in support of the investigation and clean-up activities under the Comprehensive Environmental Response, Compensation, and Liability Act of 1980 (CERCLA) and the Superfund Amendments and Reauthorization Act of 1986 (SARA). Other EPA Program Offices, as well as customers outside the Agency, that have similar analytical data needs also use this service.

2.0 DESCRIPTION OF SERVICE

This Statement of Work (SOW) provides a contractual framework for laboratories to perform analytical services. This framework applies EPA Contract Laboratory Program (CLP) analytical methods for the isolation, detection, and quantitative measurement of 51 Trace Volatiles, 51 Low/Medium Volatiles, 69 Semivolatiles, 18 Semivolatiles by SIM, 21 Pesticides, and 9 Aroclors in aqueous/water and soil/sediment samples. The SOW also includes Toxicity Characteristic Leaching Procedure (TCLP) and Synthetic Precipitation Leaching Procedure (SPLP) leachate extraction procedures. The analytical service contract provides the methods to be used and the specific contractual requirements by which the EPA will evaluate the data.

3.0 DATA USES

This analytical service provides data used for a variety of purposes, such as: determining the nature and extent of contamination at a hazardous waste site, assessing priorities for response based on risks to human health and the environment, determining appropriate clean-up actions, and determining when remedial actions are complete. The data may be used in all stages in the investigation of hazardous waste sites, including site inspections, Hazard Ranking System (HRS) scoring, remedial investigation/feasibility studies, remedial design, treatability studies, and removal actions.

In addition, the Contractor must be aware of the importance of maintaining the integrity of data generated under the contract, since it is used to make major decisions regarding public health and environmental welfare. The data may also be used in litigation against Potentially Responsible Parties (PRPs) in the enforcement of Superfund legislation.

4.0 SUMMARY OF REQUIREMENTS

The SOW is comprised of eight exhibits:

- Exhibit A - Summary of Requirements
- Exhibit B - Reporting and Deliverables Requirements
- Exhibit C - Organic Target Analyte List and Contract Required Quantitation Limits
- Exhibit D - Analytical Methods
- Exhibit E - Quality Systems
- Exhibit F - Programmatic Quality Assurance/Quality Control Elements
- Exhibit G - Glossary of Terms
- Exhibit H - Format for Electronic Data Deliverables

ED_004144A_00000101-00204

4.1 Major Task Areas

For each sample, the Contractor shall perform the tasks described in each section. Specific requirements for each task are detailed in the exhibits referenced.

4.1.1 Sample Receiving, Storage, and Disposal

The Contractor will receive samples from potential hazardous waste sites and shall store and maintain these samples under proper chain of custody (COC) procedures. The Contractor shall follow procedures outlined in Section 5.0 of this Exhibit for proper sample receipt and handling as well as each Exhibit D - Analytical Methods for proper storage and disposal of unused portion of samples. All anomalies and identified issues shall be communicated to the EPA via the CLP Sample Management Office (SMO) Contractor.

4.1.2 Sample Preparation and Analysis

The Contractor is advised that the samples received under this contract are usually from known or suspected hazardous waste sites and may contain high levels of organic and inorganic materials of a potentially hazardous nature and of unknown structure and concentration, and should be handled throughout the analysis with appropriate caution. It is the Contractor's responsibility to take all necessary measures to ensure laboratory safety.

4.1.2.1 The Contractor shall prepare samples as described in the respective Exhibit D - Analytical Methods for the requested analysis type. Sample preparation methods shall remain consistent for all samples analyzed within a Sample Delivery Group (SDG).

4.1.3 Sample Reporting and Resubmission of Data

4.1.3.1 Required formats for the reporting of data are found in Exhibit B - Reporting and Deliverables Requirements and Exhibit H - Format for Electronic Data Deliverables. The Contractor shall be responsible for completing and submitting analysis data sheets and electronic data as requested in a format specified in this SOW and within the time specified in Exhibit B - Reporting and Deliverables Requirements, Section 1.1.

4.1.3.2 Use of formats other than those approved will be deemed as noncompliant. Such data are unacceptable. Resubmission in the specified format will be required at no additional cost to the Government.

4.1.4 Quality Assurance/Quality Control

The Contractor shall maintain a Quality Assurance Project Plan (QAPP) with the objective of providing sound analytical chemical measurements. This program shall incorporate the Quality Control (QC) procedures, any necessary corrective action, and all documentation required during data collection, as well as the Quality Assurance (QA) measures performed by management to ensure acceptable data production.

4.1.4.1 The Contractor shall strictly adhere to all specific QA/QC procedures prescribed in Exhibits D - Analytical Methods and F - Programmatic Quality Assurance/Quality Control Elements. Records documenting the use of the protocol shall be maintained in accordance with the document control procedures prescribed in Exhibit E - Quality Systems, and shall be reported in accordance with Exhibit B - Reporting and Deliverables Requirements and Exhibit H - Format for Electronic Data Deliverables.

ED_004144A_00000101-00205

4.1.4.2 Additional QC shall be conducted in the form of the analysis of Performance Evaluation (PE) samples submitted to the laboratory by the EPA. Unacceptable results of all such QC or PE samples may be used as the basis for an equitable adjustment to reflect the reduced value of the data to the EPA or rejection of the data for specific analyte(s) within an SDG or the entire SDG. Also, unacceptable results may be used as the basis for contract action. "Compliant performance" is defined as that which yields correct analyte identification and concentration values as determined by the EPA, as well as meeting the contract requirements for analysis (Exhibit D - Analytical Methods); QA/QC (Exhibit F - Programmatic Quality Assurance/Quality Control Elements); data reporting and other deliverables (Exhibits B - Reporting and Deliverables Requirements and H - Format for Electronic Data Deliverables); and sample custody, sample documentation, and Standard Operating Procedure (SOP) documentation (Exhibit E - Quality Systems). As an alternative to data rejection, the EPA may require reanalysis of noncompliant samples. Reanalysis will be performed by the Contractor at no additional cost to the EPA.

4.1.5 Modified Analysis

The Contractor may be requested by the EPA to perform a Modified Analysis (MA). The modifications may include, but are not limited to: modified preparation or analysis procedures; additional analytes; sample matrices other than those present in the SOW; and/or lower quantitation limits. The requests will be made in writing, prior to sample scheduling. All contract requirements specified in the SOW/Specifications will remain in effect unless specifically modified.

5.0 SAMPLE RECEIPT AND HANDLING

5.1 Chain of Custody

The Contractor shall receive and maintain samples under proper COC procedures. All associated document control and inventory procedures shall be developed and followed. Documentation described herein shall be required to show that all procedures are strictly followed. This documentation shall be reported as the Complete SDG File (CSF) (See Exhibit B - Reporting and Deliverables Requirements). The Contractor shall establish and use appropriate procedures to handle confidential information received from the EPA.

5.2 Sample Scheduling

5.2.1 Sample shipments to the Contractor’s facility will be scheduled and coordinated by the CLP SMO. The EPA may request analyses that include all or a subset of the Target Analytes listed in Exhibit C - Organic Target Analyte List and Contract Required Quantitation Limits. The EPA may also request modified analyses due to the nature of the samples or project requirements. The Contractor shall communicate with SMO personnel as necessary, throughout the process of sample scheduling, shipment, analysis, and data reporting, to ensure that samples are properly processed.

5.2.2 The Contractor shall accept all samples scheduled by SMO, provided that the total number of samples received in any calendar month does not exceed the monthly limitation defined in the contract. Should the Contractor elect to accept additional samples, the Contractor shall remain bound by all contract requirements for analysis of those samples accepted.

ED_004144A_00000101-00206

5.3 Sample Shipments

5.3.1 Samples will be shipped routinely to the Contractor through an overnight delivery service. However, as necessary, the Contractor shall be responsible for any handling or processing of the receipt of sample shipments. This includes the pick-up of samples at the nearest servicing airport, bus station, or other carrier within the Contractor's geographical area. The Contractor shall be available to receive sample shipments at any time the delivery service is operating, including weekends.

5.3.2 Unless otherwise instructed by the EPA Region or originating sampler, the Contractor shall be required to routinely return sample shipping containers to the appropriate sampling office within 14 calendar days following shipment receipt. This shipment must be done via ground transportation only pending receipt of a valid return authorization, unless specifically instructed to do otherwise. The Contractor will be provided a shipping mechanism by the EPA Region or originating sampler (e.g., field sampler). The Contractor shall ensure that the account numbers provided are used only for the return of Government-owned shipping containers.

5.3.2.1 The Contractor shall remove packing and other materials from the shipping containers before each pick-up and shall ensure that the shipping containers are clean. The Contractor can determine from visual inspection whether the shipping container is clean.

5.4 Sample Receipt

5.4.1 If insufficient sample amount (less than the required amount) is received to perform the analyses, the Contractor shall notify SMO and proceed with the analysis of the sample at reduced volume. The Contractor shall document this issue in the SDG Narrative.

5.4.2 If the Contractor receives broken sample containers, with enough remaining sample to perform sample analysis, but potentially not enough volume to analyze any possible re-extractions/reanalyses, the Contractor shall note the issue in the SDG Narrative, proceed with analysis of the samples, and notify SMO. If re-extraction/ reanalyses are necessary, the Contractor shall contact SMO. The Contractor shall document the provided resolution in the SDG Narrative.

5.4.3 If the Contractor encounters other problems with samples or related documentation [e.g., mixed media, sample pH, sample documentation and paperwork such as Traffic Report/Chain of Custody (TR/COC) Records not with shipment, sample and TR/COC Record do not correspond], the Contractor shall immediately contact SMO for resolution.

5.4.4 Shipping Container Temperature Monitoring

5.4.4.1 To monitor the temperature of the sample shipping container more effectively, a sample shipping container temperature indicator bottle may be included with each shipping container shipped. The applicable temperature blank will be clearly labeled.

ED_004144A_00000101-00207

5.4.4.2 When a shipping container temperature indicator bottle is included in the sample shipping container, the Contractor shall use the supplied shipping container temperature indicator bottle to determine the shipping container temperature. The temperature of the sample shipping container shall be measured and recorded immediately upon opening the shipping container, and prior to unpacking the samples or removing the packing material.

5.4.4.3 To determine the temperature of the shipping container, the Contractor shall locate the shipping container temperature indicator bottle in the sample shipping container, invert it several times, remove the cap, and insert a calibrated [National Institute of Standards and Technology (NIST)-traceable] thermometer into the shipping container temperature indicator bottle. Prior to recording the temperature, the Contractor shall allow a minimum of 3 minutes, but not greater than 5 minutes, for the thermometer to equilibrate with the liquid in the bottle. At a minimum, the thermometer used shall be capable of measuring and registering the temperature of the shipping container with an accuracy of ±1°C.

5.4.4.4 If a temperature indicator bottle is not present in the shipping container, an alternative means of determining shipping container temperature shall be used. Under no circumstances shall a thermometer or any other device be inserted into a sample bottle for the purpose of determining shipping container temperature. Other devices (e.g., infrared thermometer) which can measure temperature may be used if they can be calibrated to ±1°C.

5.4.4.5 If a temperature indicator bottle is not present in the shipping container, and the temperature of the shipping container is not less than or equal to 6°C, the Contractor shall note the issue, and the method used to determine the temperature, in the SDG Narrative and proceed with analysis of the samples. If the temperature exceeds 10°C, the Contractor shall contact SMO and inform them of the temperature deviation. SMO will contact the EPA for instructions on how to proceed. SMO will in turn notify the Contractor of the EPA's decision. The Contractor shall document the EPA's decision and the EPA Sample Numbers of all samples for which temperatures exceeded 10°C in the SDG Narrative.

5.4.4.6 Liquid bearing thermometers such as mercury or alcohol thermometers shall be traceable to NIST calibration and verified at least annually, and whenever the thermometer has been exposed to temperature extremes. The correction factor shall be indicated on the thermometer, and the date the thermometer was calibrated and the calibration factor shall be kept as prescribed in the laboratory's QA documents and be available for inspection. The NIST thermometer shall be recalibrated at least every five years or whenever the thermometer has been exposed to temperature extremes.

Digital thermometers, thermocouples, and other similar electronic temperature measuring devices shall be calibrated at least quarterly. The date the thermometer was calibrated and the calibration factor shall be kept as prescribed in the laboratory's QA documents and be available for inspection.

ED_004144A_00000101-00208

When an infrared (IR) detection device is used to measure the temperature of samples, the device shall be verified at least every six months using an NIST certified thermometer over the full temperature range that the IR thermometer will be used. This would include ambient (20-30°C), iced (4°C), and frozen (0 to -5°C). Each day of use, a single check of the IR shall be made by measuring the temperature of a bottle of water, that contains a calibrated thermometer, at the temperature of interest. Agreement between the two readings should be within 0.5°C, or the device shall be recalibrated. The daily checks of the IR shall be documented and the records maintained on file.

5.4.5 Recording Sample pH

5.4.5.1 The pH for all aqueous/water samples received by the Contractor shall be measured, using a method capable of demonstrating that proper preservation was performed (e.g., pH test strips, electronic hand-held pen, pH meter), and recorded. The pH shall be determined using a small aliquot of the sample to prevent contamination. Under no circumstances shall a strip or any device be inserted into a sample bottle for the purpose of determining pH.

5.4.5.2 All pens and pH meter electrodes shall be rinsed with reagent water between sample readings.

5.5 Sample Case

Sample analyses will be scheduled by groups of samples, each defined as a Case and identified by a unique EPA Case Number assigned by SMO. A Case signifies a group of samples collected at one site or geographical area over a finite time period, and will include one or more field samples with associated blanks. Samples may be shipped to the Contractor in a single shipment or multiple shipments over a period of time, depending on the size of the Case.

5.5.1 A Case consists of one or more SDGs. An SDG is defined by the following, whichever is most frequent:

- Each Case of field samples received; or
- Each 20 samples (excluding PE samples) within a Case; or
- Each 7 calendar day period (3 calendar day period for 7-day turnaround) during which field samples in a Case are received (said period beginning with receipt of the first sample in the SDG).
- In addition, all samples assigned to an SDG must have been scheduled under the same contractual turnaround time. Preliminary Results have no impact on defining an SDG.
- All samples scheduled with the same level of deliverables.

5.5.2 Samples may be assigned to SDGs by matrix (i.e., all soil/sediment in one SDG, all aqueous/water in another), at the discretion of the laboratory. If PE samples are received within a Case, they shall be assigned to an SDG containing field samples for that Case. Such assignment shall be made at the time the samples are received and shall <u>not</u> be made retroactively. The SDG may exceed the 20 samples limit since the limitation excludes PE samples.

ED_004144A_00000101-00209

5.5.3 Each sample received by the Contractor will be labeled with an EPA Sample Number and accompanied by a TR/COC Record bearing the Sample Number and descriptive information regarding the sample. The EPA Sample Numbers are continuous, without spaces or hyphens. If the sample numbers do not conform to this requirement, contact SMO. The Contractor shall complete and sign the TR/COC Record, recording the date of sample receipt and sample condition on receipt for each sample container.

5.5.3.1 The Contractor shall follow the instructions given on the TR/COC Record in choosing the QC samples, when such information is provided. If no QC sample is designated on the TR/COC Record, the Contractor shall select a sample and notify SMO for EPA Regional acceptance. SMO shall contact the EPA Region for confirmation immediately after notification.

5.5.3.2 If the Sampler designated two (or more) samples as QC for the same matrix, and the QC samples are not specifically labeled with the analysis they are to be used for, then the Contractor is to contact SMO to report the issue. SMO shall then contact the EPA Region and notify the Contractor of the EPA Regional decision. If the Sampler did not designate QC samples, then the Contractor is to select a sample for QC and to contact SMO to report the issue.

5.5.4 The date of delivery of the SDG, or any samples within the SDG, is the date that the last sample in the SDG is received. Validated Time of Sample Receipt (VTSR) is the date of sample receipt at the Contractor's facility, as recorded on the shipper's delivery receipt and sample TR/COC Record.

5.5.5 The Contractor shall submit electronic copy(ies) of signed TR/COC Record as Portable Document Format (PDF) file(s) for all samples in an SDG to SMO via the Superfund Analytical Services SMO Portal at https://epasmoweb.fedcsc.com within 3 working days following the receipt of the last sample in the SDG. TR/COC Records shall be submitted with their SDG information as specified in Exhibit B - Reporting and Deliverables Requirements.

5.5.6 The EPA Case Numbers, SDG Numbers, and EPA Sample Numbers shall be used by the Contractor in identifying samples received under this contract, both verbally and in reports/correspondence.

5.5.7 The Contractor shall immediately notify SMO regarding any problems and laboratory conditions that affect the timeliness of analyses and data reporting. In particular, the Contractor shall immediately notify SMO personnel in advance regarding sample data that will be delivered late and shall specify the estimated delivery date.

ED_004144A_00000101-00210

THIS PAGE INTENTIONALLY LEFT BLANK

ED_004144A_00000101-00211

EXHIBIT B

REPORTING AND DELIVERABLES REQUIREMENTS

ED_004144A_00000101-00212

THIS PAGE INTENTIONALLY LEFT BLANK

ED_004144A_00000101-00213

Exhibit B - Reporting and Deliverables Requirements

Table of Contents

Section		Page
1.0	CONTRACT REPORTS/DELIVERABLES DISTRIBUTION	5
1.1	Report Deliverable Schedule	5
1.2	Distribution	9
2.0	REPORTING REQUIREMENTS AND ORDER OF DATA DELIVERABLES	10
2.1	Introduction	10
2.2	Resubmission of Data	10
2.3	Sample Traffic Report/Chain of Custody Records	11
2.4	Complete Sample Delivery Group File	12
2.5	Copy of Complete Sample Delivery Group File	35
2.6	Electronic Data Deliverables	35
2.7	Preliminary Results	38
2.8	Method Detection Limits	39
3.0	FORM INSTRUCTIONS	39
3.1	Introduction	39
3.2	General Information	39
3.3	Header and General Form Information	40
3.4	Reporting Forms	44
3.5	Sample Log-In Sheet [Form DC-1]	66
3.6	Full Organics Complete SDG File (CSF) Inventory Sheet [Form DC-2]	67
4.0	DATA REPORTING FORMS	67

ED_004144A_00000101-00214

THIS PAGE INTENTIONALLY LEFT BLANK

ED_004144A_00000101-00215

1.0 CONTRACT REPORTS/DELIVERABLES DISTRIBUTION

1.1 Report Deliverable Schedule

The following table identifies the contract reporting and deliverables requirements, and specifies the distribution that is required for each deliverable.

TABLE 1. DELIVERABLE SCHEDULE

Item		No. of Copies[1]	Delivery Schedule	Distribution		
				SMO	Region	QATS
A.	Sample Traffic Reports/Chain of Custody (TR/COC) Records	1	3 working days after receipt of last sample in Sample Delivery Group (SDG).	X		
B.[2,3]	Complete SDG File (CSF)	1	XX[4] days after Validated Time of Sample Receipt (VTSR) of last sample in SDG.		X	
C.[2,5,7]	Copy of CSF and Hardcopy Data in Portable Document Format (PDF) Format	1	XX[4] days after VTSR of last sample in SDG.	X		
D.[2,6]	Preliminary Results (Volatiles Analyses)	1	Within 48 hours after receipt of each sample at laboratory, if requested.	X	X	
	Preliminary Results (Semivolatiles, Pesticides, and Aroclor Analyses)	1	Within 72 hours after receipt of each sample at laboratory, if requested.	X	X	
E.[2,7]	Electronic Data Deliverable (EDD)	1	XX[4] days after VTSR of last sample in SDG.	X		
F.[2]	Proficiency Testing (PT) Audits	1	XX[4] days after VTSR of last sample in SDG.	X		

ED_004144A_00000101-00216

TABLE 1. DELIVERABLE SCHEDULE (CON'T)

Item		No. of Copies[1]	Delivery Schedule	Distribution		
				SMO	Region	QATS
G.[7]	Determination of Method Detection Limits (MDL)	1	MDL values in spreadsheet format specified in Appendix A of Exhibit H prior to analysis of field samples, annually thereafter, and after major instrument adjustments to SMO and QATS. MDL study data prior to analysis of field samples, annually thereafter, and after major instrument adjustments to QATS only. Submission of all deliverables within 7 days of determinations.	X		X
H.	Standard Operating Procedures (SOPs)	1	Submit within 60 days after contract award. Submit the latest version within 7 days of receipt of written request, to recipients as directed. (See Exhibit E, Section 4.0) Submit amended documents within 14 days of amended SOP(s) as directed in Exhibit E, Section 4.4.			X
I.	Quality Assurance Project Plan (QAPP)	1	Submit within XX[4] days after contract award. Submit the latest version within 7 days of receipt of written request, to recipients as directed. (See Exhibit E, Section 3.0) Submit amended documents within 14 days of amended QAPP as directed in Exhibit E, Section 3.3.			X

ED_004144A_00000101-00217

TABLE 1. DELIVERABLE SCHEDULE (CON'T)

Item		No. of Copies[1]	Delivery Schedule	Distribution		
				SMO	Region	QATS
J.	Instrument Electronic Data	Lot	Retain for 3 years after data submission of the reconciled CSF. Submit within 7 days of receipt of written request, to recipients as directed. (See Exhibit F, Section 8.3)	As Directed		X
K.	Extracts	Lot	Retain for 1 year after data submission. Submit within 7 days after receipt of written request, to recipients as directed.	As Directed		
L.	Samples	Lot	Retain for 60 days after data submission. Submit within 7 days after receipt of written request, to recipients as directed.	As Directed		

ED_004144A_00000101-00218

Footnotes:

[1] The number of copies specified is the number of copies required to be delivered to each recipient.

[2] **DELIVERABLES ARE TO BE REPORTED TOTAL AND COMPLETE.** Concurrent delivery is required. Delivery shall be made such that all designated recipients receive the item on the same calendar day. This includes resubmission of both the hardcopy and electronic deliverable. The date of delivery of the SDG, or any sample within the SDG, is the date that all samples have been delivered. **If the deliverables are due on a Saturday, Sunday, or Federal holiday, then they shall be delivered on the next business day. Deliverables received after this time will be considered late.**

[3] CSF will contain the original Sample Data for Level 2a, 2b, and 3 deliverables, plus all of the original documents described in Exhibit B, Section 2.4.

[4] The number of days associated with these elements will be provided in the associated laboratory contract document and will also be provided at the time of sample scheduling by the Sample Management Office (SMO) Contractor.

[5] Retain for 365 days after data submission, and submit as directed within 7 days after receipt of written request by the U.S. Environmental Protection Agency's Regional Contract Laboratory Program Contracting Officer's Representative(EPA Regional CLP COR) and Analytical Services Branch CLP COR (ASB CLP COR). Supplemental data (i.e., logbooks) may be requested in writing from the EPA Regional staff or the ASB CLP COR. All written communication sent by the EPA must include the EPA Regional CLP COR in the distribution list. If the EPA Regional CLP COR has not been included in the distribution list, contact the ASB CLP COR.

[6] If requested at the time of sample scheduling, the Contractor shall provide Preliminary Results, consisting of Form 1-OR sample analyses and field Quality Control (QC) analyses. The Contractor shall provide the SMO copy via the EPA Electronic Data Exchange and Evaluation System (EXES) at https://epasmoweb.fedcsc.com as a PDF file as preliminary results. The PDF file name should be PR_Case Number_SDG Number_Contract Number_Method. Sample TR/COC Records and SDG Cover Page (per Exhibit B, Section 2.7.1) shall be submitted with the Preliminary Results. The designated Regional recipient shall receive the Preliminary Results as a PDF file or in alternative electronic formats (e.g., Microsoft® Word) via email. The Contractor will be notified of the email address and format at the time of sample scheduling.

NOTE: Preliminary Results Delivery Schedule:

If a sample requiring Preliminary Results arrives at the laboratory before 5 p.m., the Preliminary Results are due within the required turnaround time. If a sample requiring Preliminary Results is received at the laboratory after 5 p.m., the Preliminary Results are due within the required turnaround time beginning at 8 a.m. the following day.

[7] The Contractor shall provide SMO the electronic files via EXES at https://epasmoweb.fedcsc.com.

ED_004144A_00000101-00219

1.2 Distribution

The following addresses correspond to the "Distribution" column in Exhibit B, Section 1.1, Table 1 - Deliverable Schedule.

Sample Management Office (SMO)[1]:

Delivery instructions shall be provided upon contract award.

EPA Region:

SMO will provide the Contractor with the list of addressees for data delivery for the 10 EPA Regions. SMO will provide the Contractor with updated EPA Regional address/name lists as necessary throughout the period of the contract and identify other client recipients on a case-by-case basis.

EPA Regional CLP Contracting Officer's Representative:

SMO will provide the Contractor with the list of addresses for the EPA Regional CLP CORs. SMO will provide the Contractor with updated name/address lists as necessary throughout the period of the contract.

Quality Assurance Technical Support (QATS)[2]:

Delivery instructions shall be provided upon contract award.

---

[1] SMO is a Contractor-operated facility operating under the SMO contract awarded and administered by the EPA.

[2] QATS is a Contractor-operated facility operating under the QATS contract awarded and administered by the EPA.

ED_004144A_00000101-00220

2.0 REPORTING REQUIREMENTS AND ORDER OF DATA DELIVERABLES

2.1 Introduction

The Contractor shall provide reports and other deliverables as specified in Exhibit B, Section 1.1 (for hardcopy) and Exhibit H (for electronic). The required content and form of each deliverable are described in this Exhibit. All reports and documentation **shall be:**

- Legible;
- Clearly labeled and completed in accordance with instructions in this Exhibit;
- Arranged in the order specified in this Exhibit;
- Paginated sequentially according to instructions in this Exhibit; and
- Double-sided.
- Information reported on the forms listed in this Exhibit [excluding the Sample Log-In Sheet (DC-1) and the Complete SDG File (CSF) Inventory Sheet (DC-2)] must be computer-generated.
- The Contractor shall use EPA Case Numbers, SDG Numbers, and EPA Sample Numbers to identify samples received under this contract, verbally, electronically, and in reports and correspondence. The Contract Number and the Statement of Work (SOW) Number shall be specified in all correspondence. The Modification Analysis Number (MA No.) shall also be included for all Modified Analyses.

2.1.1 The Contractor shall submit Staged Electronic Data Deliverable (SEDD) Level 2a, Level 2b, or Level 3 deliverables as specified at the time of scheduling.

- Level 2a deliverables consist of a specified limited subset of the data reporting forms as specified in this Exhibit.
- Level 2b deliverables include all data reporting forms as specified in this Exhibit.
- Level 3 deliverables include all data reporting forms and supporting raw data as specified in this Exhibit.

2.1.2 Section 3.0 of this Exhibit contains instructions to the Contractor for properly completing all data reporting forms to provide the EPA with all required data. Section 4.0 of this Exhibit contains the required Data Reporting Forms in Agency-specified format. Data elements and instructions for electronically reporting data are contained in Exhibit H - Format for Electronic Data Deliverables.

2.2 Resubmission of Data

If submitted documentation does not conform to the above criteria, the Contractor is required to resubmit such documentation with deficiency(ies) corrected, at no additional cost to the EPA.

2.2.1 Whenever the Contractor is required to submit or resubmit data as a result of an on-site laboratory evaluation, through an EPA Regional CLP COR action, or through an EPA Regional data reviewer's request, the data shall be clearly marked as "Additional Data" and shall be sent to both contractual data recipients (SMO and EPA Region) and to the EPA's designated recipient when a written request for a copy of

ED_004144A_00000101-00221

the CSF has been made within 5 business days (3 business days for a 7-day turnaround) of receipt of the request. A cover letter shall be included which describes what data are being delivered, to which EPA Case Number(s) and SDG Number(s) the data pertains, and who requested the data. Corrected data submitted as "Additional Data" at the request of an EPA Regional data reviewer shall only include the affected pages and be accompanied by a revised SDG Narrative (described in Section 2.4.5 of this Exhibit) documenting the reason(s) for the resubmittal.

2.2.2 Whenever the Contractor is required to submit or resubmit data as a result of Contract Compliance Screening (CCS) review by SMO, the data shall be sent to both contractual data recipients (SMO and EPA Region), and to the EPA's designated recipient when a written request for a copy of the CSF has been made, within 6 business days of receipt of the request. In all instances, the Contractor shall include a cover sheet (Laboratory Response to Results of Contract Compliance Screening). Electronic deliverables shall be submitted or resubmitted to SMO only. Revised DC-1 and DC-2 forms shall be resubmitted to SMO and the EPA Region.

2.3 Sample Traffic Report/Chain of Custody Records

2.3.1 Each sample received by the Contractor shall be labeled with an EPA Sample Number and will be accompanied by a TR/COC Record bearing the Sample Number and descriptive information regarding the sample. The Contractor shall complete the TR/COC Record, recording the date of sample receipt, verifying the number of samples, and signing the TR/COC Record.

2.3.1.1 Upon receipt, the Contractor shall sign for the receipt of samples in the COC Record section. The laboratory Sample Custodian or designated recipient opening and verifying the contents of the shipping container shall then verify receipt of all samples identified within the CLP Traffic Report section and sign and date the signature box located in the CLP Traffic Report section. If a non-CLP TR/COC Record is submitted with the samples (e.g., a Regional TR/COC Record), then the Contractor shall: (1) record the receipt date of the samples and sign the TR/COC Record to maintain the chain-of-custody, and (2) the Sample Custodian or designated recipient shall sign and date the TR/COC Record to verify sample information.

NOTE: If the laboratory is requested to transfer samples to another facility, the Contractor shall date and enter the name of the facility to where the samples will be transferred on the CLP TR/COC Record and document in the SDG Narrative.

2.3.1.2 The Contractor shall also enter the SDG Number, Case Number, and the Laboratory Contract Number on the CLP TR/COC Record. The EPA Sample Number of the first sample received in the SDG is the SDG Number. When several samples are received together in the first SDG shipment, the SDG Number shall be the lowest sample number (considering both alpha and numeric designations) in the first group of samples received under the SDG. Under no circumstances should any SDG Number be replicated within a Case. If necessary, select an alternative sample number for the SDG Number. The SDG Number is also reported on all data reporting forms (see Exhibit B, Section 3.0 - Form Instructions).

ED_004144A_00000101-00222

2.3.2 The Contractor shall submit TR/COC Records in SDG sets (i.e., TR/COC Records for all samples in an SDG), with an SDG Definition Sheet attached. The SDG Definition Sheet shall contain the following items:

- Laboratory Name;
- Contract Number;
- Modified Analysis Number (if applicable);
- Case Number;
- List of the method/analysis for each sample; and
- List of EPA Sample Numbers of all samples in the SDG, identifying the first and last samples received, and their Laboratory Receipt Dates (LRDs).

NOTE: When more than one sample is received in the first or last SDG shipment, the "first" sample received would be the sample with the lowest sample number (considering both alpha and numeric designations); the "last" sample received would be the sample with the highest sample number (considering both alpha and numeric designations).

2.3.3 EPA Sample Numbers are continuous, without spaces or hyphens. The original Sample TR/COC Record page, with laboratory receipt information and signed with an original Contractor signature, shall be submitted for each sample in the SDG.

2.3.4 If samples are received at the laboratory with multi-sample TR/COC Records, all the samples on one multi-sample TR/COC Record may not necessarily be in the same SDG. In this instance, the Contractor must make the appropriate number of photocopies of the TR/COC Record and submit one copy with each SDG Definition Sheet.

2.4 Complete Sample Delivery Group File

The CSF is described in this section. Sections 2.4.7 through 2.4.11 are specific to the individual analytical methods. If analysis by one or more of the analytical methods is not required, then those method sections are not required as a deliverable. Each method section shall include data for analysis of all samples in one SDG, including field samples, calibrations, QC samples, and supporting documentation. The CSF shall be complete before submission. The CSF shall be consecutively paginated (starting with page number one and ending with the number of all pages in the package).

2.4.1 The CSF shall contain all original documents where possible. No photocopies of original documents shall be placed in the CSF unless the original data was initially written in a bound notebook, maintained by the Contractor, or the originals were previously submitted to the EPA with another Case/SDG. The CSF shall contain all original documents and be numbered according to the specifications in Exhibit B, Sections 3.0 and 4.0; and organized according to Form DC-2.

NOTE: The Contractor shall retain a legible electronic (PDF) or hardcopy of the CSF for 365 days after submission of the reconciled data package to the Government. After this time, the Contractor may dispose of the package.

ED_004144A_00000101-00223

2.4.2 The CSF shall consist of the following original documents:

- Completed SDG Cover Page with signature and date
- EPA Sample TR/COC Record
- Completed and signed Sample Log-In Sheet [Form DC-1]
- Completed and signed Full Organics Complete SDG File (CSF) Inventory Sheet [Form DC-2]
- SDG Narrative
- All original shipping documents, including, but not limited to, the following documents:
  - Airbills (if an airbill is not received, include a hardcopy receipt requested from the shipping company or a printout of the shipping company's electronic tracking information);
  - Sample Tags (if present) sealed in plastic bags; and
  - All original receiving documents, including, but not limited to, other receiving forms or copies of receiving logbooks.

NOTE: All Case-related documentation may be used or admitted as evidence in subsequent legal proceedings. Any other Case-specific documents generated after the CSF is sent to the EPA, as well as copies that are altered in any fashion, are also deliverables to the EPA. Send the original to the EPA Region and a copy to SMO. Send to the EPA's designated recipient only upon written request.

2.4.3 For Level 3 deliverables, all original laboratory records of sample transfer, preparation, and analysis, including, but not limited to, the following documents:

- Percent Solids Log;
- Original preparation, cleanup, and analysis forms, or copies of preparation, cleanup, and analysis logbook pages;
- Internal sample and sample extract transfer Chain of Custody Records;
- Screening records;
- All instrument output, including strip charts, Gel Permeation Chromatography (GPC), High Performance Liquid Chromatography (HPLC), and all cleanup activities; and
- Performance Evaluation (PE) Instruction forms.

2.4.4 All other original SDG-specific documents in the possession of the laboratory, including, but not limited to, the following documents:

- Communication logs;
- Copies of personal logbook pages;
- All handwritten SDG-specific notes; and
- Any other SDG-specific documents not covered by the above.

If the Contractor does submit SDG-specific documents to the EPA after the submission of the CSF, the documents shall be identified with submission codes. For example, if a page or pages were submitted with errors, the corrected pages would be identified with

ED_004144A_00000101-00224

the Case and SDG Number, and the code R#, where the "#" is incremented for any subsequent resubmissions. If a page has been left out of a CSF, it must be submitted with the code A#. If the entire CSF is to be resubmitted, it must be designated with the code RS#. A revised Form DC-2 should be submitted, and the submission codes and locations of the documents in the CSF shall be recorded in the "Other Records" section on the revised Form DC-2.

2.4.5 SDG Narrative

This document shall be clearly labeled "SDG Narrative" and shall contain: Laboratory Name, SOW Number, Contract Number, Case Number, SDG Number, Modified Analysis Number (if applicable), and detailed documentation of any QC, sample, shipment, and/or analytical problems encountered in processing the samples reported in the CSF.

2.4.5.1 The Contractor shall include any technical and administrative problems encountered, and the resolution or corrective actions taken. These problems may include, but are not limited to interference problems encountered during analysis, dilutions, reanalyses and/or re-extractions performed, and any problems with the analysis of samples.

2.4.5.2 Document the alternative temperature technique used, if applicable, to determine shipping container temperature if a temperature indicator bottle is not present in the shipping container.

2.4.5.3 The Contractor shall also provide at least one example of each type of calculation, including relative response factors or calibration factors (CFs), as well as sample results to allow the recalculation of sample results from raw instrument output.

2.4.5.4 The Contractor shall also include a discussion of any SOW Modified Analyses. This includes attaching a copy of the approved modification form to the SDG Narrative.

2.4.5.5 The Contractor shall also identify and explain any differences which exist between the Form(s) 1-OR and supporting documentation provided in the data package and those previously provided as Preliminary Results.

2.4.5.6 SDG Narrative associated attachments, including, but not limited to:

- Gas Chromatography (GC) column information; and
- Unequivocal cross reference of laboratory to EPA Sample Numbers.

2.4.5.7 When submitting corrected data as "Additional Data" at the request of an EPA Regional data reviewer, the Contractor shall include a revised SDG Narrative documenting the reason(s) for the resubmittal.

2.4.6 SDG Cover Page

Cover Page for the organic analyses data shall include: Laboratory Name; Laboratory Code; Contract Number; Case Number; SDG Number; Modified Analysis Number (MA No.) (if appropriate); SOW Number; EPA Sample Numbers in alphanumeric order cross-referenced with Laboratory Sample ID numbers; and Analytical Method.

2.4.6.1 The SDG Cover Page shall contain the following statement, verbatim: "I certify that this data package is in compliance with the terms and conditions of the contract, both technically and for completeness, for other than the conditions detailed in the

ED_004144A_00000101-00225

SDG Narrative. Release of the data contained in this hardcopy Complete SDG File and in the electronic data submitted has been authorized by the Laboratory Manager or the Manager's designee, as verified by the following signature." This statement shall be directly followed by the signature of the Laboratory Manager or designee with typed lines containing the signer's name and title, and the date of signature.

2.4.7 Trace Volatile Organics Sample Data Forms and Raw Data

2.4.7.1 Quality Control Summary

2.4.7.1.1 Deuterated Monitoring Compound Recovery [Form 2A-OR and Form 2B-OR].

2.4.7.1.2 Matrix Spike/Matrix Spike Duplicate Recovery [Form 3A-OR]. This data shall be provided upon the EPA Region's request for analysis of Matrix Spike/Matrix Spike Duplicates (MS/MSDs).

2.4.7.1.3 Method Blank Summary [Form 4-OR]. If more than a single form is necessary, forms shall be in chronological order by date of analysis of the blank, by instrument.

2.4.7.1.4 GC/MS Instrument Performance Check [Form 5-OR]. If more than a single form is necessary, forms shall be in chronological order, by instrument. Not required for Level 2a deliverables.

2.4.7.1.5 Internal Standard Area and Retention Time Summary [Form 8A-OR]. If more than a single form is necessary, forms shall be arranged in chronological order, by instrument. Not required for Level 2a deliverables.

2.4.7.2 Sample Data

Sample data shall be submitted with the organic analysis data reporting forms for all samples in the SDG. Data shall be arranged in increasing alphanumeric EPA Sample Number order. For Level 3 deliverables, the forms for each sample analysis shall be followed by the sample raw data for that analysis.

2.4.7.2.1 Organic Analysis Data Sheet [Form 1A-OR and Form 1B-OR]. Tabulated analytical results (identification and quantitation) of the requested analytes shall be included. The validation and release of these results shall be authorized by a specific signed statement on the Cover Page. In the event that the Laboratory Manager cannot verify all data reported for each sample, the Laboratory Manager shall provide a detailed description of the problems associated with the sample(s) in the SDG Narrative.

2.4.7.2.2 Appropriate concentration units shall be specified and entered on Form 1A-OR. The quantitative values shall be reported in units of micrograms/Liter (µg/L) for aqueous/water samples (no other units are acceptable). Analytical results shall be reported to two significant figures.

2.4.7.2.3 Tentatively Identified Compounds (TICs) [Form 1B-OR]. Form 1B-OR is the tabulated list of the highest probable match for up to 30 organic compounds that are not trace volatile, low/medium volatile, or semivolatile target analytes, Deuterated Monitoring Compounds (DMCs), internal standard compounds, or alkanes, and are not listed in Exhibit C - Organic Target Analyte List and Contract Required Quantitation Limits. An alkane is defined as any hydrocarbon with the generic formula C_nH_{2n+2} (straight-chain or branched) or C_nH_{2n} (cyclic) that contains only C-H and C-C single bonds. The

ED_004144A_00000101-00226

tabulated list includes the Chemical Abstracts Service (CAS) Number (if applicable), tentative identification, and estimated concentration. This form shall be included, even if no compounds are found. No duplicated CAS numbers should be reported for TICs. Follow the instructions in Exhibit D - Trace Concentrations of Volatile Organic Compounds Analysis, Section 11.1.2.4 when reporting TICs.

2.4.7.2.4 Reconstructed Total Ion Chromatograms (for each sample including dilutions and reanalyses). Reconstructed ion chromatograms shall be normalized to the largest non-solvent component and shall contain the following header information:

- EPA Sample Number;
- Date and time of analysis;
- Gas Chromatograph/Mass Spectrometer (GC/MS) instrument identifier;
- Laboratory File Identifier; and
- Analyst ID.

2.4.7.2.4.1 Internal standards and DMCs shall be labeled with the names of analytes, either directly out from the peak or on a printout of Retention Times (RTs) if RTs are printed over the peak. Labeling of other analytes is not required and should not detract from the legibility of the required labels.

2.4.7.2.4.2 If automated data system procedures are used for preliminary identification and/or quantitation of the target analytes, the complete data system report shall be included in the Level 3 CSF, in addition to the reconstructed ion chromatogram. The complete data system report shall include the following information:

- EPA Sample Number;
- Date and time of analysis;
- RT or scan number of identified target analytes;
- Ion used for quantitation with measured area;
- Copy of area table from data system;
- On-column concentration/amount, including units;
- GC/MS instrument and column identifier;
- Laboratory File Identifier; and
- Analyst ID.

2.4.7.2.4.3 In all instances where the data system report has been edited, or where manual integration or quantitation has been performed, the GC/MS instrument operator shall identify such edits or manual procedures by initialing and dating the changes made to the report, and shall include the integration scan range. The GC/MS instrument operator shall also mark each integrated area with the letter "m" on the quantitation report. The hardcopy printout(s) of the Extracted Ion Current Profiles (EICPs) of the quantitation ion displaying the original integration(s) shall be included in the raw data, in addition to the hardcopy

ED_004144A_00000101-00227

printout(s) of the EICPs of the quantitation ion displaying the manual integration(s). This applies to all trace volatile target analytes listed in Exhibit C - Organic Target Analyte List and Contract Required Quantitation Limits, internal standards, and DMCs.

2.4.7.2.4.4 Other Required Information for Level 3 reporting. For each sample, by each analyte identified, the following items shall be included in the data package:

- Copies of raw spectra and copies of background-subtracted mass spectra of trace volatile target analytes listed in Exhibit C - Organic Target Analyte List and Contract Required Quantitation Limits that are identified in the sample and corresponding background-subtracted target analyte standard mass spectra. Spectra shall be labeled with EPA Sample Number, Laboratory File Identifier, date and time of analysis, and GC/MS instrument identifier. Analyte names shall be clearly marked on all spectra; and
- Copies of mass spectra of organic analytes not listed in Exhibit C - Organic Target Analyte List and Contract Required Quantitation Limits with associated best-match spectra (maximum of three best matches). Spectra shall be labeled with EPA Sample Number, Laboratory File Identifier, date and time of analysis, and GC/MS instrument identifier. Analyte names shall be clearly marked on all spectra.

2.4.7.3 Standards Data

2.4.7.3.1 GC/MS Initial Calibration Data [Form 6A-OR] shall be included in order by instrument, if more than one instrument is used. Not required for Level 2a deliverables. For Level 3 deliverables, the Contractor shall submit the following raw data:

- Volatile standard(s) reconstructed ion chromatograms and quantitation reports for the five-point initial calibration, labeled as in Section 2.4.7.2.4. Spectra are not required.
- All initial calibration data that pertain to samples in the data package shall be included, regardless of when it was performed or for which Case. When more than one initial calibration is performed, the data shall be in chronological order, by instrument.
- Labels for standards shall reflect the concentrations of the non-ketone analytes in µg/L. (If the non-ketone analytes have a concentration of 5.0 µg/L, then the reported label shall be RRF5.0).
- EICPs displaying each manual integration and the corresponding original system integration.

2.4.7.3.2 Initial Calibration Verification and Continuing Calibration Verification for GC/MS [Form 7A-OR] shall be included in order by instrument, if more than one instrument is used. Not required for Level 2a deliverables. For Level 3 deliverables, the Contractor shall submit the following raw data:

ED_004144A_00000101-00228

- Volatile standard(s) reconstructed ion chromatograms and quantitation reports for the initial calibration verifications and all continuing (12-hour) calibration verifications, labeled as in Section 2.4.7.2.4. Spectra are not required.
- When more than one Initial Calibration Verification (ICV) or Continuing Calibration Verification (CCV) is performed, forms shall be in chronological order, by instrument. The ICV forms shall be placed together prior to all CCV forms.
- EICPs displaying each manual integration and the corresponding original system integration.

2.4.7.3.3 In all instances where the data system report has been edited, or where manual integration or quantitation has been performed, the GC/MS instrument operator shall identify such edits or manual procedures by initialing and dating the changes made to the report, and shall include the integration scan range. The GC/MS instrument operator shall also mark each integrated area with the letter "m" on the quantitation report. The hardcopy printout(s) of the EICPs of the quantitation ion displaying the original integration(s) shall be included in the raw data, in addition to the hardcopy printout(s) of the EICPs of the quantitation ion displaying the manual integration(s). This applies to all trace volatile target analytes listed in Exhibit C - Organic Target Analyte List and Contract Required Quantitation Limits, internal standards, and DMCs.

2.4.7.4 Quality Control Data - Raw data only required for Level 3 deliverables.

2.4.7.4.1 4-bromofluorobenzene data shall be arranged in chronological order by instrument for each 12-hour period, for each GC/MS system utilized.

- Bar graph spectrum, labeled as in Section 2.4.7.2.4.
- Mass listing, labeled as in Section 2.4.7.2.4.
- Reconstructed total ion chromatogram, labeled as in Section 2.4.7.2.4.

2.4.7.4.2 Blank data shall be arranged by type of blank (method, storage, or instrument) and shall be in chronological order, by instrument.

NOTE: This order is different from that used for samples.

- Tabulated results [Form 1A-OR].
- Tentatively Identified Compounds [Form 1B-OR] even if none are found.
- Reconstructed ion chromatogram(s) and quantitation report(s), labeled as in Section 2.4.7.2.4.
- Target analyte spectra with laboratory-generated standard, labeled as in Section 2.4.7.2.4. Data systems that are incapable of dual display shall provide spectra in the following order:
  - Raw target compound spectra.
  - Enhanced or background-subtracted spectra.

ED_004144A_00000101-00229

- Laboratory-generated standard spectra.

- GC/MS library search spectra for TICs, labeled as in Section 2.4.7.2.4.

- Quantitation/calculation of TIC concentrations.

2.4.7.4.3 Matrix Spike and Matrix Spike Duplicate Data

- Tabulated results [Form 1A-OR] of target analytes is required if MS/MSD analysis is requested at the time of scheduling by the EPA Region. Form 1B-OR is not required.

- Reconstructed ion chromatogram(s) and quantitation report(s), labeled as in Section 2.4.7.2.4. Spectra are not required.

2.4.8 Low/Medium Volatile Organics Sample Data Forms and Raw Data

2.4.8.1 Quality Control Summary

2.4.8.1.1 Deuterated Monitoring Compound Recovery [Form 2A-OR and Form 2B-OR]

2.4.8.1.2 Matrix Spike/Matrix Spike Duplicate Recovery [Form 3A-OR]. This data shall be provided upon the EPA Region's request for analysis of MS/MSDs.

2.4.8.1.3 Method Blank Summary [Form 4-OR]. If more than a single form is necessary, forms shall be in chronological order by date of analysis of the blank, by instrument.

2.4.8.1.4 GC/MS Instrument Performance Check [Form 5-OR]. If more than a single form is necessary, forms shall be in chronological order, by instrument. Not required for Level 2a deliverables.

2.4.8.1.5 Internal Standard Area and Retention Time Summary [Form 8A-OR]. If more than a single form is necessary, forms shall be in chronological order, by instrument. Not required for Level 2a deliverables.

2.4.8.2 Sample Data

Sample data shall be submitted with the organic analysis data reporting forms for all samples in the SDG. Data shall be arranged in increasing alphanumeric EPA Sample Number order. For Level 3 deliverables, the forms for each sample analysis shall be followed by the sample raw data for that analysis.

2.4.8.2.1 Organic Analysis Data Sheet [Form 1A-OR and Form 1B-OR]. Tabulated analytical results (identification and quantitation) of the requested analytes shall be included. The validation and release of these results shall be authorized by a specific signed statement on the Cover Page. In the event that the Laboratory Manager cannot verify all data reported for each sample, the Laboratory Manager shall provide a detailed description of the problems associated with the sample(s) in the SDG Narrative.

2.4.8.2.2 Appropriate concentration units shall be specified and entered on Form 1A-OR. The quantitative values shall be reported in units of µg/L for aqueous/water samples, milligrams/Liter (mg/L) for Toxicity Characteristic Leaching Procedure (TCLP) leachate samples, and micrograms/kilogram (µg/kg) for soil/sediment samples (no other units are acceptable). Results for soil/sediment samples shall be reported on a dry

ED_004144A_00000101-00230

weight basis. Analytical results shall be reported to two significant figures.

2.4.8.2.3 Tentatively Identified Compounds (TICs) [Form 1B-OR]. Form 1B-OR is the tabulated list of the highest probable match for up to 30 organic compounds that are not trace volatile, low/medium volatile, or semivolatile target analytes, DMCs, internal standard compounds, or alkanes, and are not listed in Exhibit C - Organic Target Analyte List and Contract Required Quantitation Limits. An alkane is defined as any hydrocarbon with the generic formula C_nH_{2n+2} (straight-chain or branched) or C_nH_{2n} (cyclic) that contains only C-H and C-C single bonds. The tabulated list includes the CAS Number (if applicable), tentative identification, and estimated concentration. This form shall be included even if no compounds are found. No duplicated CAS numbers should be reported for TICs. Follow the instructions in Exhibit D - Low/Medium Concentrations of Volatile Organic Compounds Analysis, Section 11.1.2.4 when reporting TICs.

2.4.8.2.4 Reconstructed Total Ion Chromatograms (for each sample including dilutions and reanalyses). Reconstructed ion chromatograms shall be normalized to the largest non-solvent component and shall contain the following header information:

- EPA Sample Number;
- Date and time of analysis;
- GC/MS instrument and column identifier;
- Laboratory File Identifier; and
- Analyst ID.

2.4.8.2.4.1 Internal standards and DMCs shall be labeled with the names of analytes, either directly out from the peak or on a printout of RTs if RTs are printed over the peak. Labeling of other analytes is not required and should not detract from the legibility of the required labels.

2.4.8.2.4.2 If automated data system procedures are used for preliminary identification and/or quantitation of the target analytes, the complete data system report shall be included in the Level 3 CSF, in addition to the reconstructed ion chromatogram. The complete data system report shall include the following information:

- EPA Sample Number;
- Date and time of analysis;
- RT or scan number of identified target analytes;
- Ion used for quantitation with measured area;
- Copy of area table from data system;
- On-column concentration/amount, including units;
- GC/MS instrument and column identifier;
- Laboratory File Identifier; and
- Analyst ID.

ED_004144A_00000101-00231

2.4.8.2.4.3 In all instances where the data system report has been edited, or where manual integration or quantitation has been performed, the GC/MS instrument operator shall identify such edits or manual procedures by initialing and dating the changes made to the report, and shall include the integration scan range. The GC/MS instrument operator shall also mark each integrated area with the letter "m" on the quantitation report. The hardcopy printout(s) of the EICPs of the quantitation ion displaying the original integration(s) shall be included in the raw data, in addition to the hardcopy printout(s) of the EICPs of the quantitation ion displaying the manual integration(s). This applies to all low/medium volatile target analytes listed in Exhibit C - Organic Target Analyte List and Contract Required Quantitation Limits, internal standards, and DMCs.

2.4.8.2.4.4 Other Required Information for Level 3 reporting. For each sample, by each analyte identified, the following items shall be included in the data package:

- Copies of raw spectra and copies of background-subtracted mass spectra of low/medium volatile target analytes listed in Exhibit C - Organic Target Analyte List and Contract Required Quantitation Limits that are identified in the sample and corresponding background-subtracted target analyte standard mass spectra. Spectra shall be labeled with EPA Sample Number, Laboratory File Identifier, date and time of analysis, and GC/MS instrument identifier. Analyte names shall be clearly marked on all spectra; and

- Copies of mass spectra of organic compounds not listed in Exhibit C - Organic Target Analyte List and Contract Required Quantitation Limits with associated best-match spectra (maximum of three best matches). Spectra shall be labeled with EPA Sample Number, Laboratory File Identifier, date and time of analysis, and GC/MS instrument identifier. Analyte names shall be clearly marked on all spectra.

2.4.8.3 Standards Data

2.4.8.3.1 GC/MS Initial Calibration Data [Form 6A-OR] shall be included in order by instrument, if more than one instrument is used. Not required for Level 2a deliverables. For Level 3 deliverables, the Contractor shall submit the following raw data:

- Volatile standard(s) reconstructed ion chromatograms and quantitation reports for the five-point initial calibration, labeled as in Section 2.4.8.2.4. Spectra are not required.

- All initial calibration data that pertain to samples in the data package shall be included, regardless of when it was performed or for which Case. When more than one initial calibration is performed, the data shall be in chronological order, by instrument.

- Labels for standards shall reflect the concentrations of the non-ketone analytes in µg/L. (If the non-ketone analytes have a concentration of 5.0 µg/L, then the reported label shall be RRF5.0).

ED_004144A_00000101-00232

NOTE: For low-level soil sediment samples, the concentration of the low standard is 2.5 µg/L. Since 10 milliliter (mL) purge volumes are required for low-level soil standards, the reported label shall be RRF2.5.

- EICPs displaying each manual integration and the corresponding original system integration.

2.4.8.3.2 Initial Calibration Verification and Continuing Calibration Verification for GC/MS [Form 7A-OR] shall be included in order by instrument, if more than one instrument is used. Not required for Level 2a deliverables. For Level 3 deliverables, the Contractor shall submit the following raw data:

- Volatile standard(s) reconstructed ion chromatograms and quantitation reports for the initial calibration verifications and all continuing (12-hour) calibration verifications, labeled as in Section 2.4.8.2.4. Spectra are not required.
- When more than one ICV or CCV is performed, forms shall be in chronological order, by instrument. The ICV forms shall be placed together prior to all CCV forms.
- EICPs displaying each manual integration and the corresponding original system integration.

2.4.8.3.3 In all instances where the data system report has been edited, or where manual integration or quantitation has been performed, the GC/MS instrument operator shall identify such edits or manual procedures by initialing and dating the changes made to the report, and shall include the integration scan range. The GC/MS instrument operator shall also mark each integrated area with the letter "m" on the quantitation report. The hardcopy printout(s) of the EICPs of the quantitation ion displaying the original integration(s) shall be included in the raw data, in addition to the hardcopy printout(s) of the EICPs of the quantitation ion displaying the manual integration(s). This applies to all low/medium volatile target analytes listed in Exhibit C - Organic Target Analyte List and Contract Required Quantitation Limits, internal standards, and DMCs.

2.4.8.4 Quality Control Data - Raw data only required for Level 3 deliverables.

2.4.8.4.1 4-bromofluorobenzene (BFB) data shall be arranged in chronological order by instrument for each 12-hour period, for each GC/MS system utilized.

- Bar graph spectrum, labeled as in Section 2.4.8.2.4.
- Mass listing, labeled as in Section 2.4.8.2.4.
- Reconstructed total ion chromatogram, labeled as in Section 2.4.8.2.4.

2.4.8.4.2 Blank data shall be arranged by type of blank (method, storage, and instrument) and shall be in chronological order, by instrument.

NOTE: This order is different from that used for samples.

- Tabulated results [Form 1A-OR].

ED_004144A_00000101-00233

- Tentatively Identified Compounds [Form 1B-OR] even if none are found.
- Reconstructed ion chromatogram(s) and quantitation report(s), labeled as in Section 2.4.8.2.4.
- Target analyte spectra with laboratory-generated standard, labeled as in Section 2.4.8.2.4. Data systems that are incapable of dual display shall provide spectra in the following order:
  - Raw target analyte spectra.
  - Enhanced or background-subtracted spectra.
  - Laboratory-generated standard spectra.
- GC/MS library search spectra for TICs, labeled as in Section 2.4.8.2.4.
- Quantitation/calculation of TIC concentrations.

2.4.8.4.3 Matrix Spike and Matrix Spike Duplicate Data

- Tabulated results [Form 1A-OR] of target analytes are required if MS/MSD analysis is requested at the time of scheduling by the EPA Region. Form 1B-OR is not required.
- Reconstructed ion chromatogram(s) and quantitation report(s), labeled as in Section 2.4.8.2.4. Spectra are not required.

2.4.9 Semivolatile Organics Sample Data Forms and Raw Data

2.4.9.1 Quality Control Summary

2.4.9.1.1 Deuterated Monitoring Compound Recovery [Form 2A-OR and Form 2B-OR]

2.4.9.1.2 Matrix Spike/Matrix Spike Duplicate Recovery [Form 3A-OR]. This data shall be provided upon the EPA Region's request for analysis of MS/MSDs.

2.4.9.1.3 Method Blank Summary [Form 4-OR]. If more than a single form is necessary, forms shall be in chronological order by date of analysis of the blank, by instrument.

2.4.9.1.4 GC/MS Instrument Performance Check [Form 5-OR]. If more than a single form is necessary, forms shall be in chronological order, by instrument. Not required for Level 2a deliverables.

NOTE: For the Selected Ion Monitoring (SIM) analysis technique, this form is required for analytical sequence although Instrument Performance Check information on this form is optional.

2.4.9.1.5 Internal Standard Area and Retention Time Summary [Form 8A-OR]. If more than a single form is necessary, forms shall be in chronological order, by instrument. Not required for Level 2a deliverables.

2.4.9.2 Sample Data

Sample data shall be submitted with the organic analysis data reporting forms for all samples in the SDG. Data shall be arranged in increasing alphanumeric EPA Sample Number order. For Level 3 deliverables, the forms for each sample analysis shall be followed by the sample raw data for that analysis.

ED_004144A_00000101-00234

Semivolatile sample data for SIM analysis shall be arranged together with the rest of the SIM Semivolatiles data at the end of the subsection.

2.4.9.2.1 Organic Analysis Data Sheet [Form 1A-OR and Form 1B-OR]. Tabulated analytical results (identification and quantitation) of the requested analytes shall be included. The validation and release of these results shall be authorized by a specific signed statement on the Cover Page. In the event that the Laboratory Manager cannot verify all data reported for each sample, the Laboratory Manager shall provide a detailed description of the problems associated with the sample(s) in the SDG Narrative.

2.4.9.2.2 Appropriate concentration units shall be specified and entered on Form 1A-OR. The quantitative values shall be reported in units of µg/L for aqueous/water samples, mg/L for TCLP leachate samples, and µg/kg for soil/sediment samples (no other units are acceptable). Results for soil/sediment samples shall be reported on a dry weight basis. Analytical results shall be reported to two significant figures.

2.4.9.2.3 Tentatively Identified Compounds (TICs) [Form 1B-OR]. Form 1B-OR is the tabulated list of the highest probable match for up to 30 organic compounds that are not trace volatile, low/medium volatile, and semivolatile target analytes, DMCs, internal standard compounds, or alkanes, and are not listed in Exhibit C - Organic Target Analyte List and Contract Required Quantitation Limits. An alkane is defined as any hydrocarbon with the generic formula C_nH_{2n+2} (straight-chain or branched) or C_nH_{2n} (cyclic) that contains only C-H and C-C single bonds. The tabulated list includes the CAS Number (if applicable), tentative identification, and estimated concentration. This form shall be included even if no compounds are found. No duplicated CAS numbers should be reported for TICs. Follow the instructions in Exhibit D - Semivolatiles Organic Compounds Analysis Section 11.1.2.5 when reporting TICs.

2.4.9.2.4 Reconstructed Total Ion Chromatograms (for each sample including dilutions and reanalyses). Reconstructed ion chromatograms shall be normalized to the largest non-solvent component and shall contain the following header information:

- EPA Sample Number;
- Date and time of analysis;
- GC/MS instrument and column identifier;
- Laboratory File Identifier; and
- Analyst ID.

NOTE: Each Selected Ion Current Profile (SICP) for samples taken through the optional analysis using the SIM technique shall be labeled as in this section.

2.4.9.2.4.1 Internal standards and DMCs shall be labeled with the names of analytes, either directly out from the peak or on a printout of RTs if RTs are printed over the peak. Labeling of other analytes is not required and should not detract from the legibility of the required labels.

ED_004144A_00000101-00235

2.4.9.2.4.2 If automated data system procedures are used for preliminary identification and/or quantitation of the target analytes, the complete data system report shall be included in the Level 3 CSF, in addition to the reconstructed ion chromatogram. The complete data system report shall include the following information:

- EPA Sample Number;
- Date and time of analysis;
- RT or scan number of identified target analytes;
- Ion used for quantitation with measured area;
- Copy of area table from data system;
- On-column concentration/amount, including units;
- GC/MS instrument and column identifier;
- Laboratory File Identifier; and
- Analyst ID.

2.4.9.2.4.3 In all instances where the data system report has been edited, or where manual integration or quantitation has been performed, the GC/MS instrument operator shall identify such edits or manual procedures by initialing and dating the changes made to the report, and shall include the integration scan range. The GC/MS instrument operator shall also mark each integrated area with the letter "m" on the quantitation report. The hardcopy printout(s) of the EICPs of the quantitation ion displaying the original integration(s) shall be included in the raw data, in addition to the hardcopy printout(s) of the EICPs of the quantitation ion displaying the manual integration(s). This applies to all semivolatile target analytes listed in Exhibit C - Organic Target Analyte List and Contract Required Quantitation Limits, internal standards, and DMCs.

2.4.9.2.4.4 Other Required Information for Level 3 reporting. For each sample, by each analyte identified, the following items shall be included in the data package:

- Copies of raw spectra and copies of background-subtracted mass spectra of semivolatile target analytes listed in Exhibit C - Organic Target Analyte List and Contract Required Quantitation Limits that are identified in the sample and corresponding background-subtracted target analyte standard mass spectra. This includes target analytes that are identified during the optional analysis using the SIM technique. Spectra shall be labeled with EPA Sample Number, Laboratory File Identifier, date and time of analysis, and GC/MS instrument identifier. Analyte names shall be clearly marked on all spectra; and
- Copies of mass spectra of organic analytes not listed in Exhibit C - Organic Target Analyte List and Contract Required Quantitation Limits with associated best-match spectra (maximum of three best matches). Spectra shall be labeled with EPA Sample Number, Laboratory File Identifier, date and time of analysis, and GC/MS

ED_004144A_00000101-00236

instrument identifier. Analyte names shall be clearly marked on all spectra.

2.4.9.3 Standards Data

2.4.9.3.1 GC/MS Initial Calibration Data [Form 6A-OR] shall be included in order by instrument, if more than one instrument is used. Not required for Level 2a deliverables. For Level 3 deliverables, the Contractor shall submit the following raw data:

- Semivolatile standard(s) reconstructed ion chromatograms and quantitation reports for the five-point initial calibration, labeled as in Section 2.4.9.2.4. Spectra are not required.
- All initial calibration data that pertain to samples in the data package shall be included, regardless of when it was performed or for which Case. When more than one initial calibration is performed, the data shall be in chronological order, by instrument.
- Labels for standards shall reflect the concentrations of the analytes in ng/µL. (If the target analytes have a concentration of 5.0 ng/µL, then the reported label shall be RRF5.0).
- EICPs displaying each manual integration and the corresponding original system integration.

2.4.9.3.2 Initial Calibration Verification and Continuing Calibration Verification for GC/MS [Form 7A-OR] shall be included in order by instrument, if more than one instrument is used. Not required for Level 2a deliverables. For Level 3 deliverables, the Contactor shall submit the following raw data:

- Semivolatile standard(s) reconstructed ion chromatograms and quantitation reports for the initial calibration verifications and all continuing (12-hour) calibration verifications, labeled as in Section 2.4.9.2.4. Spectra are not required.
- When more than one ICV or CCV is performed, forms shall be in chronological order, by instrument. The ICV forms shall be placed together prior to all CCV forms.
- EICPs displaying each manual integration and the corresponding original system integration.

2.4.9.3.3 In all instances where the data system report has been edited, or where manual integration or quantitation has been performed, the GC/MS instrument operator shall identify such edits or manual procedures by initialing and dating the changes made to the report, and shall include the integration scan range. The GC/MS instrument operator shall also mark each integrated area with the letter "m" on the quantitation report. The hardcopy printout(s) of the EICPs of the quantitation ion displaying the original integration(s) shall be included in the raw data, in addition to the hardcopy printout(s) of the EICPs of the quantitation ion displaying the manual integration(s). This applies to all semivolatile target analytes listed in Exhibit C - Organic Target Analyte List and Contract Required Quantitation Limits, internal standards, and DMCs.

ED_004144A_00000101-00237

2.4.9.4 Quality Control Data - Raw data only required for Level 3 deliverables.

2.4.9.4.1 Decafluorotriphenylphosphine (DFTPP) data shall be arranged in chronological order by instrument for each 12-hour period, for each GC/MS system utilized.

- Bar graph spectrum, labeled as in Section 2.4.9.2.4.
- Mass listing, labeled as in Section 2.4.9.2.4.
- Reconstructed total ion chromatogram, labeled as in Section 2.4.9.2.4.

2.4.9.4.2 Blank data shall be arranged by type of blank (method) and shall be in chronological order, by instrument.

NOTE: This order is different from that used for samples.

- Tabulated results [Form 1A-OR].
- Tentatively Identified Compounds [Form 1B-OR] even if none are found.
- Reconstructed ion chromatogram(s) and quantitation report(s), labeled as in Section 2.4.9.2.4.
- Target analyte spectra with laboratory-generated standard, labeled as in Section 2.4.9.2.4. Data systems that are incapable of dual display shall provide spectra in the following order:
  - Raw target analyte spectra.
  - Enhanced or background-subtracted spectra.
  - Laboratory-generated standard spectra.
- GC/MS library search spectra for TICs, labeled as in Section 2.4.9.2.4.
- Quantitation/calculation of TIC concentrations.

2.4.9.4.3 Matrix Spike and Matrix Spike Duplicate Data

- Tabulated results [Form 1A-OR] of target analytes are required if MS/MSD analysis is requested at the time of scheduling by the EPA Region. Form 1B-OR is not required.
- Reconstructed ion chromatogram(s) and quantitation report(s), labeled as in Section 2.4.9.2.4. Spectra are not required.

2.4.10 Pesticide Organics Sample Data Forms and Raw Data

2.4.10.1 Quality Control Summary

2.4.10.1.1 Surrogate Recovery [Form 2C-OR]

2.4.10.1.2 Matrix Spike/Matrix Spike Duplicate Recovery [Form 3A-OR]. MS/MSD analysis is required for the pesticide method unless otherwise specified by the EPA Region. See Exhibit D - Pesticides Analysis for frequency.

2.4.10.1.3 Laboratory Control Sample Recovery [Form 3B-OR]

2.4.10.1.4 Method Blank Summary [Form 4-OR]. If more than a single form is necessary, forms shall be in chronological order by date of analysis of the blank, by instrument.

ED_004144A_00000101-00238

2.4.10.2 Sample Data

Sample data shall be submitted with the organic analysis data reporting forms for all samples in the SDG. Data shall be arranged in increasing alphanumeric EPA Sample Number order. For Level 3 deliverables, the form for each sample shall be followed by the sample raw data for both analyses.

2.4.10.2.1 Organic Analysis Data Sheet [Form 1A-OR]. The lower concentration of the requested analytes tabulated (identification and quantitation) using both analytical GC columns must be reported. The validation and release of these results shall be authorized by a specific signed statement on the Cover Page. In the event that the Laboratory Manager cannot verify all data reported for each sample, the Laboratory Manager shall provide a detailed description of the problems associated with the sample(s) in the SDG Narrative.

2.4.10.2.2 Appropriate concentration units shall be specified and entered on Form 1A-OR. The quantitative values shall be reported in units of µg/L for aqueous/water samples, mg/L for TCLP leachate samples, and µg/kg for soil/sediment samples (no other units are acceptable). Results for soil/sediment samples shall be reported on a dry weight basis. Analytical results shall be reported to two significant figures.

2.4.10.2.3 Chromatograms (for each sample including dilutions and reanalyses). Chromatograms shall be normalized to the largest non-solvent component and shall contain the following header information:

- EPA Sample Number;
- Date and time of analysis;
- Gas Chromatograph/Electron Capture Detector (GC/ECD) instrument and column identifier;
- Laboratory File Identifier; and
- Analyst ID.

2.4.10.2.4 Surrogates shall be labeled with the names of analytes, either directly out from the peak or on a printout of RTs if RTs are printed over the peak. Labeling of other analytes is not required and should not detract from the legibility of the required labels.

2.4.10.2.4.1 If automated data system procedures are used for preliminary identification and/or quantitation of the target analytes, the complete data system report shall be included in the Level 3 CSF, in addition to the chromatogram. The complete data system report shall include the following information:

- EPA Sample Number;
- Date and time of analysis;
- RT of identified target analytes;
- Peak area responses used for quantitation;
- On-column concentration/amount, including units;
- GC/ECD instrument and column identifier;

ED_004144A_00000101-00239

- Laboratory File Identifier; and
- Analyst ID.

2.4.10.2.4.2 In all instances where the data system report has been edited, or where manual integration or quantitation has been performed, the GC instrument operator shall identify such edits or manual procedures by initialing and dating the changes made to the report, and shall include the properly scaled raw chromatogram that clearly shows the manual integration. The GC instrument operator shall also mark each integrated area with the letter "m" on the quantitation report, and initial and date the changes. The hardcopy printout(s) of the chromatograms displaying the original integration(s) shall be included in the raw data, in addition to the hardcopy printout(s) of the chromatograms displaying the manual integration(s). This applies to all pesticide target analytes listed in Exhibit C - Organic Target Analyte List and Contract Required Quantitation Limits and surrogates.

2.4.10.2.4.3 Other Required Information for Level 3 reporting. For each sample, by each analyte identified, the following items shall be included in the data package:

- Copies of raw chromatograms from both GC columns used to analyze the pesticide target analytes listed in Exhibit C - Organic Target Analyte List and Contract Required Quantitation Limits. Chromatograms shall be labeled with EPA Sample Number, Laboratory File Identifier, date and time of analysis, and GC/ECD instrument identifier. Analyte names shall be clearly marked on all chromatograms.

2.4.10.3 Standards Data

2.4.10.3.1 Initial Calibration Data [Form 6B-OR, 6C-OR, 6D-OR, 6E-OR, 6F-OR, and 6G-OR] shall be included in order by instrument, if more than one instrument is used. Not required for Level 2a deliverables. For Level 3 deliverables, the Contractor shall submit the following raw data:

- Pesticide standard(s) chromatograms and quantitation reports for the five-point initial calibration, labeled as in Section 2.4.10.2.3. The CFs and RTs for each concentration level of Pesticide target analytes and surrogates.
- All initial calibration data that pertain to samples in the data package shall be included, regardless of when it was performed and for which Case. When more than one initial calibration is performed, the data shall be in chronological order, by instrument.
- Labels for standards shall reflect the concentration levels of the initial calibration standards. The lowest level is labeled as CF1, the next level is labeled sequentially as CF2, and the 5th level is labeled as CF5.
- Chromatograms displaying each manual integration and the corresponding original system integration.

ED_004144A_00000101-00240

2.4.10.3.2 Continuing Calibration Verification Data [Form 7B-OR, 7C-OR, and 7D-OR] shall be included in order by instrument, for each instrument used. Not required for Level 2a deliverables. For Level 3 deliverables, the Contractor shall submit the following raw data:

- Pesticide standard(s) chromatograms and quantitation reports for all continuing (12-hour) calibration verifications, labeled as in Section 2.4.10.2.3.
- When more than one CCV is performed, forms shall be in chronological order, by instrument.
- Chromatograms displaying each manual integration and the corresponding original system integration.

2.4.10.3.3 In all instances where the data system report has been edited, or where manual integration or quantitation has been performed, the GC instrument operator shall identify such edits or manual procedures by initialing and dating the changes made to the report, and shall include the properly scaled raw chromatogram that clearly shows the manual integration. The GC instrument operator shall also mark each integrated area with the letter "m" on the quantitation report, initial and date the changes. The hardcopy printout(s) of the chromatograms displaying the original integration(s) shall be included in the raw data, in addition to the hardcopy printout(s) of the chromatograms displaying the manual integration(s). This applies to all pesticide target analytes listed in Exhibit C - Organic Target Analyte List and Contract Required Quantitation Limits and surrogates.

2.4.10.3.4 Analytical Sequence [Form 8B-OR] for pesticide analyses must be included for each GC column used. Not required for Level 2a deliverables.

2.4.10.3.5 Florisil Cartridge Check [Form 9A-OR] for mandatory cleanup of sample extracts. Florisil check chromatograms and quantitation reports for each lot of Florisil cartridge used to cleanup up sample extracts must be included. Not required for Level 2a deliverables.

2.4.10.3.6 GPC Calibration Verification [Form 9B-OR] for sample extracts that underwent GPC cleanup. GPC calibration verification and GPC blank chromatograms and quantitation reports must be reported weekly for each GPC system used to cleanup sample extracts included in the SDG. Not required for Level 2a deliverables.

2.4.10.3.7 Identification Summary [Form 10A-OR and 10B-OR] for all samples with positively identified single and multi-component analytes, in order by increasing EPA Sample Number. Form 10B-OR not required for Level 2a deliverables.

2.4.10.4 Quality Control Data - Raw data only required for Level 3 deliverables.

2.4.10.4.1 QC data shall be arranged in chronological order by instrument for each 12-hour period, for each GC/ECD system utilized.

- Chromatogram, labeled as in Section 2.4.10.2.3.

2.4.10.4.2 Blank data shall be arranged by type of blank (method and instrument) and shall be in chronological order, by instrument.

ED_004144A_00000101-00241

NOTE: This order is different from that used for samples.

- Tabulated results [Form 1A-OR].
- Chromatograms and quantitation report from each analytical GC column used for analysis, labeled as in Section 2.4.10.2.3.
- Quantitation/calculation of analyte and surrogate concentrations.

2.4.10.4.3 Laboratory Control Sample Data

- Tabulated results [Form 1A-OR] of target analytes from each analytical column used for analysis.
- Chromatogram(s) and quantitation report(s), labeled as in Section 2.4.10.2.3.

2.4.10.4.4 Matrix Spike and Matrix Spike Duplicate Data

- Tabulated results [Form 1A-OR] of target analytes from each analytical column used for analysis.
- Chromatogram(s) and quantitation report(s), labeled as in Section 2.4.10.2.3.

2.4.11 Aroclor Organics Sample Data Forms and Raw Data

2.4.11.1 Quality Control Summary

2.4.11.1.1 Surrogate Recovery [Form 2C-OR]

2.4.11.1.2 Matrix Spike/Matrix Spike Duplicate Recovery [Form 3A-OR]. MS/MSD analysis is required for the Aroclor method unless otherwise specified by the EPA Region. See Exhibit D - Aroclors Analysis for frequency.

2.4.11.1.3 Laboratory Control Sample Recovery [Form 3B-OR]

2.4.11.1.4 Method Blank Summary [Form 4-OR]. If more than a single form is necessary, forms shall be in chronological order by date of analysis of the blank, by instrument.

2.4.11.2 Sample Data

Sample data shall be submitted with the organic analysis data reporting forms for all samples in the SDG. Data shall be arranged in increasing alphanumeric EPA Sample Number order. For Level 3 deliverables, the form for each sample shall be followed by the sample raw data for both analyses.

2.4.11.2.1 Organic Analysis Data Sheet [Form 1A-OR]. The lower concentration of the requested analytes tabulated (identification and quantitation) using both analytical GC columns must be reported. The validation and release of these results shall be authorized by a specific signed statement on the Cover Page. In the event that the Laboratory Manager cannot verify all data reported for each sample, the Laboratory Manager shall provide a detailed description of the problems associated with the sample(s) in the SDG Narrative.

2.4.11.2.2 Appropriate concentration units shall be specified and entered on Form 1A-OR. The quantitative values shall be reported in units of µg/L for aqueous/water samples and µg/kg for soil/sediment samples (no other units are acceptable). Results for soil/sediment samples shall be reported on a dry

ED_004144A_00000101-00242

weight basis. Analytical results shall be reported to two significant figures.

2.4.11.2.3 Chromatograms (for each sample including dilutions and reanalyses). Chromatograms shall be normalized to the largest non-solvent component and shall contain the following header information:

- EPA Sample Number;
- Date and time of analysis;
- GC/ECD instrument and column identifier;
- Laboratory File Identifier; and
- Analyst ID.

2.4.11.2.4 Surrogates shall be labeled with the names of analytes, either directly out from the peak or on a printout of RTs if RTs are printed over the peak. Labeling of other analytes is not required and should not detract from the legibility of the required labels.

2.4.11.2.4.1 If automated data system procedures are used for preliminary identification and/or quantitation of the target analytes, the complete data system report shall be included in Level 3 CSF, in addition to the chromatogram. The complete data system report shall include the following information:

- EPA Sample Number;
- Date and time of analysis;
- RT of identified target analytes;
- Peak area responses used for quantitation;
- On-column concentration/amount, including units;
- GC/ECD instrument and column identifier;
- Laboratory File Identifier; and
- Analyst ID.

2.4.11.2.4.2 In all instances where the data system report has been edited, or where manual integration or quantitation has been performed, the GC instrument operator shall identify such edits or manual procedures by initialing and dating the changes made to the report, and shall include the properly scaled raw chromatogram that clearly shows the manual integration. The GC instrument operator shall also mark each integrated area with the letter "m" on the quantitation report, and initial and date the changes. The hardcopy printout(s) of the chromatograms displaying the original integration(s) shall be included in the raw data, in addition to the hardcopy printout(s) of the chromatograms displaying the manual integration(s). This applies to all Aroclor target analytes listed in Exhibit C - Organic Target Analyte List and Contract Required Quantitation Limits and surrogates.

ED_004144A_00000101-00243

2.4.11.2.4.3 Other Required Information for Level 3 reporting. For each sample, by each analyte identified, the following items shall be included in the data package:

- Copies of raw chromatograms from both GC columns used to analyze the Aroclor target analytes listed in Exhibit C - Organic Target Analyte List and Contract Required Quantitation Limits. Chromatograms shall be labeled with EPA Sample Number, Laboratory File Identifier, date and time of analysis, and GC/ECD instrument identifier. Analyte names shall be clearly marked on all chromatograms.

2.4.11.3 Standards Data

2.4.11.3.1 Initial Calibration Data [Form 6D-OR, 6E-OR, and 6F-OR] shall be included in order by instrument, if more than one instrument is used. Not required for Level 2a deliverables. For Level 3 deliverables, the Contractor shall submit the following raw data:

- Aroclor standard(s) chromatograms and quantitation reports for the five-point initial calibration and for the single-point calibration, labeled as in Section 2.4.11.2.3. The CFs and RTs for each concentration level of Aroclor target analytes and surrogates.
- All initial calibration data that pertain to samples in the data package shall be included, regardless of when it was performed or for which Case. When more than one initial calibration is performed, the data shall be in chronological order, by instrument.
- Labels for standards shall reflect the concentration levels of the initial calibration standards. The lowest level is labeled as CF1, the next level is labeled sequentially as CF2, and the 5th level is labeled as CF5.
- Chromatograms displaying each manual integration and the corresponding original system integration.

2.4.11.3.2 Continuing Calibration Verification Data [Form 7D-OR] shall be included in order by instrument, for each instrument used. Not required for Level 2a deliverables. For Level 3 deliverables, the Contractor shall submit the following raw data:

- Aroclor standard(s) chromatograms and quantitation reports for all continuing (12-hour) calibration verifications, labeled as in Section 2.4.11.2.3.
- When more than one CCV is performed, forms shall be in chronological order, by instrument.
- Chromatograms displaying each manual integration and the corresponding original system integration.

2.4.11.3.3 In all instances where the data system report has been edited, or where manual integration or quantitation has been performed, the GC instrument operator shall identify such edits or manual procedures by initialing and dating the changes made to the report, and shall include the properly scaled raw chromatogram that clearly shows the manual integration. The GC instrument operator shall also mark each

ED_004144A_00000101-00244

integrated area with the letter "m" on the quantitation report, initial and date the changes. The hardcopy printout(s) of the chromatograms displaying the original integration(s) shall be included in the raw data, in addition to the hardcopy printout(s) of the chromatograms displaying the manual integration(s). This applies to all Aroclor target analytes listed in Exhibit C - Organic Target Analyte List and Contract Required Quantitation Limits and surrogates.

2.4.11.3.4 Analytical Sequence [Form 8B-OR] for Aroclor analyses must be included for each GC column used. Not required for Level 2a deliverables.

2.4.11.3.5 GPC Calibration Verification [Form 9B-OR] for sample extracts that underwent GPC cleanup. GPC calibration verification and GPC blank chromatograms and quantitation reports must be reported weekly for each GPC system used to cleanup sample extracts included in the SDG. Not required for Level 2a deliverables.

2.4.11.3.6 Identification Summary [10B-OR] for all samples with positively identified Aroclor target analytes, in order by increasing EPA Sample Number. Not required for Level 2a deliverables.

2.4.11.4 Quality Control Data - Raw data only required for Level 3 deliverables.

2.4.11.4.1 QC data shall be arranged in chronological order by instrument for each 12-hour period, for each GC/ECD system utilized.

- Chromatogram, labeled as in Section 2.4.11.2.3.

2.4.11.4.2 Blank data shall be arranged by type of blank (method and instrument) and shall be in chronological order, by instrument.

NOTE: This order is different from that used for samples.

- Tabulated results [Form 1A-OR].
- Chromatograms and quantitation report from each analytical GC column used for analysis, labeled as in Section 2.4.11.2.3.
- Quantitation/calculation of analyte and surrogate concentrations.

2.4.11.4.3 Laboratory Control Sample Data

- Tabulated results [Form 1A-OR] of target analytes from each analytical column used for analysis.
- Chromatogram(s) and quantitation report(s), labeled as in Section 2.4.11.2.3.

2.4.11.4.4 Aroclor Matrix Spike and Matrix Spike Duplicate Data

- Tabulated results [Form 1A-OR] of target analytes from each analytical column used for analysis.
- Chromatogram(s) and quantitation report(s), labeled as in Section 2.4.11.2.3.

ED_004144A_00000101-00245

2.5 Copy of Complete Sample Delivery Group File

The laboratory shall provide a copy of the CSF and a PDF file to SMO, as specified in Table 1 - Deliverable Schedule, of this Exhibit.

2.6 Electronic Data Deliverables

The Contractor shall provide the required electronic data deliverable as specified in Table 1 - Deliverable Schedule, of this Exhibit.

2.6.1 Electronic Data Delivery in Staged Electronic Data Deliverable

The Contractor shall provide an EDD in SEDD format for Levels 2a, 2b, and 3. The EDD shall include analytical data for all samples in the SDG, as specified in Exhibit H - Format for Electronic Data Deliverables.

2.6.2 Portable Document Format of Complete Sample Delivery Group File

The Contractor shall provide a complete copy of the CSF, and any additional or reconciled hardcopy deliverables, in a PDF file via EXES at https://epasmoweb.fedcsc.com, and follow the naming convention for the PDF file. The format of the PDF file should be HCD_Case Number_SDG Number_Contract Number_Submission Type.

2.6.2.1 The following identifiers are used based on submission type:

TABLE 2. PDF SUBMISSION IDENTIFIERS

Submission Type	**Identifier**
First Submission	FS
Replacement Submission (if a complete replacement of the first submission PDF is required)	RS
Reconciliation Submission	R# (The # character represents the number of the reconciliation. For example, the first reconciliation submission would be identified as R1.)
Additional Data Submission	A# (The # character represents the number of the additional data submissions. For example, the first additional data submission would be identified as A1.)

2.6.2.1.1 The PDF file shall be organized in accordance with the directions provided in Exhibit B, Section 2.0 of the SOW.

2.6.2.1.2 Organic data shall be bookmarked using a hierarchical bookmark structure (i.e., an overview or "parent" bookmark, and a subordinate or "child" bookmark nested underneath the "parent" bookmark). The required hierarchical structure is shown in Table 3 - Hierarchical Bookmark Structure.

ED_004144A_00000101-00246

TABLE 3. HIERARCHICAL BOOKMARK STRUCTURE

Group Bookmark	Parent Bookmark	Child Bookmark
SDG Cover Page, Sample TR/COC Records, Form DC-1, Form DC-2, and SDG Narrative		
Trace Volatile Organic Data	QC Summary	Deuterated Monitoring Compound Recovery
		Matrix Spike and Matrix Spike Duplicate Sample Recovery
		Method Blank Summary
		Instrument Performance Check
		Internal Standard
	Sample Data	Organic Analysis Data Sheet in increasing alphanumeric EPA Sample Number order
		Tentatively Identified Compounds (with supporting raw data)
	Standards Data	Initial Calibration
		Initial Calibration Verification
		Continuing Calibration Verification
	QC Data	GC/MS Raw Data
		GC/MS Performance Check Raw Data
		Blanks
		Matrix Spike and Matrix Spike Duplicate Data
		Preparation Logs
		Standard and Reagent Preparation Logs
		Analysis Logs
Low/Medium Volatile Organic Data	QC Summary	Deuterated Monitoring Compound Recovery
		Matrix Spike and Matrix Spike Duplicate Sample Recovery
		Method Blank Summary
		Instrument Performance Check
		Internal Standard
	Sample Data	Organic Analysis Data Sheet in increasing alphanumeric EPA Sample Number order
		Tentatively Identified Compounds (with supporting raw data)
	Standards Data	Initial Calibration
		Initial Calibration Verification
		Continuing Calibration Verification
	QC Data	GC/MS Raw Data
		GC/MS Performance Check Raw Data
		Blanks
		Matrix Spike and Matrix Spike Duplicate Data
		Preparation Logs
		Standard and Reagent Preparation Logs
		TCLP/Synthetic Precipitation Leaching Procedure (SPLP) Logbooks
		Analysis Logs

ED_004144A_00000101-00247

TABLE 3. HIERARCHICAL BOOKMARK STRUCTURE (CON'T)

Group Bookmark	Parent Bookmark	Child Bookmark
Semivolatile Organic Data	QC Summary	Deuterated Monitoring Compound Recovery
		Matrix Spike and Matrix Spike Duplicate Sample Recovery
		Method Blank Summary
		Instrument Performance Check
		Internal Standard
	Sample Data	Organic Analysis Data Sheet in increasing alphanumeric EPA Sample Number order
		Tentatively Identified Compounds (with supporting raw data)
	Standards Data	Initial Calibration
		Initial Calibration Verification
		Continuing Calibration Verification
	QC Data	GC/MS Raw Data
		GC/MS Performance Check Raw Data
		Blanks
		Matrix Spike and Matrix Spike Duplicate Data
		Preparation Logs
		Standard and Reagent Preparation Logs
		TCLP/SPLP Logbooks
		Analysis Logs
Pesticide Data	QC Summary	Surrogate Recovery
		Matrix Spike and Matrix Spike Duplicate Sample Recovery
		Laboratory Control Sample Recovery
		Method Blank Summary
	Sample Data	Organic Analysis Data Sheet (with supporting raw data) in increasing alphanumeric EPA Sample Number order
	Standards Data	Resolution Checks
		Instrument Performance Checks
		Initial Calibration
		Continuing Calibration Verification
		Analytical Sequence
		Cleanup Checks
		Analyte Identification Summary
	QC Data	Blanks
		Matrix Spike and Matrix Spike Duplicate Data
		Laboratory Control Sample Data
		Preparation Logs
		TCLP/SPLP Logbooks
		Standard and Reagent Preparation Logs
		Analysis Logs

ED_004144A_00000101-00248

TABLE 3. HIERARCHICAL BOOKMARK STRUCTURE (CON'T)

Group Bookmark	Parent Bookmark	Child Bookmark
Aroclor Data	QC Summary	Surrogate Recovery
		Matrix Spike and Matrix Spike Duplicate Sample Recovery
		Laboratory Control Sample Recovery
		Method Blank Summary
	Sample Data	Organic Analysis Data Sheet (with supporting raw data) in increasing alphanumeric EPA Sample Number order
	Standards Data	Initial Calibration
		Continuing Calibration Verification
		Analytical Sequence
		Cleanup Checks
		Analyte Identification Summary
	QC Data	Blanks
		Matrix Spike and Matrix Spike Duplicate Data
		Laboratory Control Sample Data
		Preparation Logs
		Standard and Reagent Preparation Logs
		Analysis Logs
Receiving Documents, Transfer Records, and Miscellaneous	Additional Documents	Receiving Logbooks
		Internal Sample, Sample Extract, and Transfer Chain-of-Custody Records
		PE/PT Instruction Forms
		Communication Logs

2.7 Preliminary Results

The Form(s) 1-OR data results (including all appropriate qualifiers and flags) shall be submitted for all samples in one SDG of a Case. Sample analysis shall follow all requirements stipulated in Exhibit D. The Contractor shall clearly identify the Preliminary Results by labeling each Form(s) 1-OR as "Preliminary Results" under the form title (i.e., under Organic Analysis Data Sheet). The Contractor shall also include a disclaimer on all Form(s) 1-OR stating that the "Data results contained on this Form 1-OR are for screening purposes only, and may not have been validated for CLP criteria". Sample TR/COC Records and SDG Cover Page (per Exhibit B, Section 2.7.1) shall be submitted with the Preliminary Results.

2.7.1 The Contractor shall submit the SDG Cover Page following the specifications in Exhibit B, Sections 2.4.6 and 3.4.1. The SDG Cover Page shall be clearly labeled to indicate that the data being reported are Preliminary Results. The SDG Cover Page shall contain the following statement, verbatim: "I certify that these Preliminary Results are in compliance with the terms and conditions of the contract, both technically and for completeness, for other than the conditions detailed in the SDG Narrative. Release of the data contained in this hardcopy Data Package has been authorized by the Laboratory Manager or the Manager's designee, as verified by the following signature". This statement shall be directly followed by the signature of the Laboratory Manager or designee with typed lines containing the signer's name and title, and the date of signature.

ED_004144A_00000101-00249

2.8 Method Detection Limits

The Contractor shall perform and report determination of the MDLs by the method specified in Exhibit D - Analytical Methods for each instrument used under this contract.

The Contractor shall deliver all determined MDLs to SMO and QATS electronically in the format described in Appendix A - Format Characteristics for Method Detection Limit Study Data, of Exhibit H - Format for Electronic Deliverables, according to the delivery schedule specified in Table 1 - Deliverable Schedule, of Exhibit B - Reporting and Deliverables Requirements.

Submission of the study data for the determination of method and instrument parameters, to QATS only, shall include the data used to determine the values reported. The Contractor shall provide MDL raw data including sample, calibration, and QC data and supporting documentation, including, but not limited to: Extraction Logs, Standard and Reagent Preparation Logs, and Analysis Logs, where applicable, to QATS only, according to the delivery schedule specified in Table 1 - Deliverable Schedule, of Exhibit B - Reporting and Deliverables Requirements.

3.0 FORM INSTRUCTIONS

3.1 Introduction

This section contains specific instructions for the completion of all required Organic Data Reporting Forms.

3.2 General Information

Values shall be reported on the hardcopy forms according to the respective form instructions in this section.

3.2.1 The data reporting forms discussed in Exhibit B, Section 3.4, and presented in Exhibit B, Section 4.0, have been designed in conjunction with the electronic data format specified in Exhibit H - Format for Electronic Data Deliverables. Information entered on these forms shall **not** exceed the size of the field given on the form, including such laboratory-generated items as "Lab Name" and "Lab Sample ID". See Table 4 - Required Forms for Reporting Level, for a listing of required forms by reporting level.

TABLE 4. REQUIRED FORMS FOR REPORTING LEVEL

Level	Required Forms
SEDD 2a	Forms 1, 2, 3, 4
SEDD 2b	Forms 1-10 (all Forms)
SEDD 3	Forms 1-10 (all Forms)

3.2.2 All characters which appear on the data reporting forms presented in Section 4.0 shall be reproduced by the Contractor when submitting data, and the format of the forms submitted shall provide exactly the same information as that shown in the contract. No information may be added, deleted, or moved from its specified position. The names of various fields and analytes (i.e., "Lab Code", "Extract Volume") shall appear as they are listed in Exhibits B - Reporting and Deliverables Requirements, and Exhibit C - Organic Target Analyte List and Contract Required Quantitation Limits, of this SOW.

ED_004144A_00000101-00250

3.2.3 Rounding Rules

For rounding off numbers to the appropriate level of precision, observe the following common rules. If the figure following those to be retained is greater than or equal to 5, the result is to be rounded up; otherwise the result is rounded down. For example, 0.4365 rounds to 0.44 and 102.4443 rounds to 100. Also see "Rounding Rules" in Exhibit G - Glossary of Terms.

3.2.3.1 Before evaluating a number for being in control or out of control of a certain limit [other than the Contract Required Quantitation Limit (CRQL)], the number evaluated shall be rounded using the above rounding rules to the significance reported for that limit. For example, the control limit for a surrogate Percent Recovery (%R) is 30-150%. Then a calculated %R of 150.46 shall be reported on Form 2C-OR as 150, which is within the control limits of 30-150. On the other hand, a calculated %R of 150.5 shall be reported on Form 2C-OR as 151, which is not within the 30-150 percent control limits.

3.3 Header and General Form Information

Six pieces of information are common to the header section of each data reporting form. These are Lab Name, Contract, Lab Code, Case Number (Case No.), Modified Analysis Number (MA No.), and SDG Number (SDG No.). Except as noted below for MA No., this information shall be entered on every form and shall match on all forms.

3.3.1 "Lab Name" shall be the name chosen by the Contractor to identify the laboratory.

3.3.2 "Contract" is the number of the EPA contract under which the analyses were performed.

3.3.3 "Lab Code" is an alphanumeric abbreviation, assigned by the EPA, to identify the laboratory and aid in data processing. This Lab Code will be assigned by the EPA at the time a contract is awarded and shall not be modified by the Contractor, except at the direction of the EPA Contracting Officer (CO). If a change of name or ownership occurs at the laboratory, the Lab Code will remain the same unless and until the Contractor is directed by the EPA CO to use another EPA-assigned Lab Code.

3.3.4 "Case No." is the SMO-assigned Case Number associated with the sample, and reported on the TR/COC Record or sample shipping paperwork.

3.3.5 "MA No." is the EPA-assigned number for analyses performed for an analytical method under the Modified Analysis clause in Exhibit A - Summary of Requirements. If samples are to be analyzed under the Modified Analysis clause, the Contractor shall list the modification reference number on all forms. If the analyses have no modified requirements, leave the "MA No." field blank.

3.3.6 "SDG No." is the SDG Number.

3.3.7 "EPA SAMPLE NO." appears either in the header section, upper right-hand corner of the form, or as the left column of a table summarizing data from a number of samples.

3.3.7.1 All samples, dilutions, reanalyses, leachates, blanks, matrix spikes, matrix spike duplicates, laboratory control samples, and standards shall be identified with an EPA Sample Number. For samples, an EPA Sample Number is the unique identifying number

ED_004144A_00000101-00251

given on the TR/COC Record or sample shipping records that accompanied that sample. In order to facilitate data assessment, the sample suffixes listed in Exhibit B, Table 5 - Codes for Labeling Data, must be used.

TABLE 5. CODES FOR LABELING DATA[1,2,3,4,5,6]

Name	Sample Number
Sample in SDG (TCLP/SPLP Leachate included)	XXXXX
Sample or Laboratory QC Not Part of the SDG[6]	ZZZZZ
Matrix Spike[1]	XXXXXMS
Matrix Spike Duplicate[1]	XXXXXMSD
Re-extracted and reanalyzed Sample	XXXXXRX
Re-extracted and reanalyzed Sample at a dilution	XXXXXRXDL
Reanalyzed (re-injected) Sample	XXXXXRE
Reanalyzed (re-injected) Sample at a dilution	XXXXXREDL
Sample analyzed at a dilution	XXXXXDL
Sample analyzed at a secondary dilution	XXXXXDL2
Sample analyzed at a third dilution	XXXXXDL3
Soil/sediment samples analyzed using the medium level method when the low-level analysis of the same sample is also present	XXXXXME
Instrument Calibration Standards:	
Volatile Instrument Performance Checks	BFB##
Semivolatile Instrument Performance Checks	DFTPP##
Volatile Standard[2]	VSTD***##
Semivolatile Standard[2]	SSTD***##
Volatile Initial Calibration Verification	VICV##
Semivolatile Initial Calibration Verification	SICV##
Pesticides Resolution Check	RESC##
Pesticides Performance Evaluation Mixture	PEM##
Pesticides Individual Mixture A (CS*)[3]	INDA*##
Pesticides Individual Mixture B (CS*)[3]	INDB*##
Pesticides Individual Mixture C (CS*)[3]	INDC*##
Toxaphene (CS*)[3]	TOXAPH*##
Aroclor 1016 (CS*)[3]	AR1016*##
Aroclor 1221 (CS*)[3]	AR1221*##
Aroclor 1232 (CS*)[3]	AR1232*##
Aroclor 1242 (CS*)[3]	AR1242*##
Aroclor 1248 (CS*)[3]	AR1248*##
Aroclor 1254 (CS*)[3]	AR1254*##
Aroclor 1260 (CS*)[3]	AR1260*##
Aroclor 1262 (CS*)[3]	AR1262*##
Aroclor 1268 (CS*)[3]	AR1268*##
Aroclor 1016/1260 Mixture (CS*)[3]	AR1660*##
QC Sample:	
Volatile Method Blank	VBLK##
Volatile Instrument Blank	VIBLK##
Volatile Storage Blank	VHBLK##
Volatile Leachate Extraction Blank	VLEB##
Semivolatile Method Blank	SBLK##
Semivolatile Leachate Extraction Blank	SLEB##

ED_004144A_00000101-00252

TABLE 5. CODES FOR LABELING DATA[1,2,3,4,5,6] (CON'T)

Name	Sample Number
Pesticide Method Blank	PBLK##
Pesticide Instrument Blank[1]	PIBLK##
Pesticide Sulfur Blank	PSBLK##
Pesticide Leachate Extraction Blank	PLEB##
Pesticide Laboratory Control Sample[1]	PLCS##
Aroclor Method Blank	ABLK##
Aroclor Instrument Blank[1]	AIBLK##
Aroclor Sulfur Blank	ASBLK##
Aroclor Laboratory Control Sample[1]	ALCS##
Florisil Cleanup Sample[4]	FLO#########
Gel Permeation Chromatograph Cleanup Sample[5]	GPC#########

Footnotes:

[1] When reporting results on forms, "1" or "2" is appended to the EPA Sample Number indicating that the results are from Gas Chromatograph (GC) column (1), [e.g., PLCS01(1) or PLCS01(2) for the second column].

[2] *** = concentration of the standards in µg/L (e.g., 005, 010, etc.). When standard concentrations for semivolatile analysis are in nanograms/microliter (ng/µl) use 005, 010, 020, 040, and 080. Use 0.10, 0.20, 0.40, 0.80, and 1.6 for the SIM analysis of Polynuclear Aromatic Hydrocarbon analytes and pentachlorophenol.

is the identifier with one or two characters or numbers, or a combination of both.

[3] * = standard level for GC/ECD analyses where numbers 1-5 usually represent the standard levels analyzed from low to high as specified in Exhibit D. For example, INDA1## represents the lowest level initial calibration (ICAL) standard and INDA5## for the highest level.

[4] ######### is the Florisil cartridge lot number.

[5] ######### is the GPC column ID.

[6] Instrument QC samples must not be reported as ZZZZZ.

3.3.7.2 These sample numbers shall be listed on the form in ascending alphanumeric order. Thus, if A1111 is the lowest (considering both alpha and numeric characters) EPA Sample Number within the SDG, it would be entered in the first EPA Sample Number field. Samples would be listed below it, in ascending sequence - A1111, A1111MS, A1111MSD, AB125, AC111, etc.

3.3.8 "Matrix" is the matrix of the sample. Enter "Soil" for soil/sediment samples and "Water" for aqueous/water and leachate samples, as appropriate.

3.3.9 "Analytical Method" is the method used to analyze the sample. Enter "Trace VOA", "VOA", "SVOA", "SVOA SIM", "PEST", or "ARO", as appropriate.

3.3.10 "Level" is applicable to the soil/sediment samples and blanks analyzed by volatile and semivolatile methods. Enter "LOW" for the low level analysis and "MED" for the medium level analysis.

3.3.11 "Lab Sample ID" is an optional laboratory-generated internal identifier. If the Contractor does not have a Lab Sample ID, this field may be left blank. However, if this identifier is used on any of the forms or accompanying hardcopy data deliverables, it must be reported on all the appropriate forms.

ED_004144A_00000101-00253

3.3.12 "Sample wt/vol:" is the aliquot amount of the sample used for sample analysis or extraction. Enter the number of grams as measured for soil/sediment samples. Enter the volumes as measured for water samples. Report weights and volumes to three significant figures (e.g., 10.0 g, 955 mL).

3.3.13 "Lab File ID" is the laboratory-generated name of the instrument data system file containing information pertaining to a particular analysis.

3.3.14 "% Solids" is the percent solids of the soil/sediment sample as determined by the procedure in Exhibit D - General Organic Analysis. Report the calculated % Solids to three significant figures.

3.3.15 "Date Extracted" is applicable to samples that have undergone an extraction procedure by the analytical method. The format of MM/DD/YYYY shall be used for the date. When continuous liquid-liquid extraction procedures are used for water samples, enter the date that the procedure was started in the "Date Extracted" field. If separatory funnel, sonication, soxhlet, or pressurized fluid extraction procedures are used, enter the date that the procedure was completed in the "Date Extracted" field.

3.3.16 "Date Analyzed" is common to all samples, blanks, and standards. The format of MM/DD/YYYY shall be used for the date.

3.3.17 "Injection Volume" is volume of the sample extract injected into the GC/MS or GC/ECD instrument for analysis. Report this volume in µL to one decimal place (e.g., 1.0 µL).

3.3.18 "Instrument ID" is the instrument identifier used by the laboratory, particularly on forms containing calibration data. The identifier must include some indication of the manufacturer and/or model of the instrument, and contain additional characters or numbers that differentiate between all instruments of the same type in the laboratory. The instrument identifier must be consistent on all forms within the SDG.

3.3.19 "GC Column" and "ID: (mm)" are two (2) fields used to identify the stationary phase of the GC column and the internal diameter of the GC column in millimeters (mm).

3.3.20 "Extract Volume" is the volume of the final concentrated extract at the completion of the sample extraction process. It is also applicable to medium level sample analysis by the purge-and-trap analytical method where the sample is extracted in methanol. It is entered as the volume measured in the unit of "µL".

3.3.21 "Heated Purge" is applicable to volatiles by purge-and-trap analytical methods. Enter "Y" for heated purge or "N" for ambient temperature purge.

3.3.22 "Extraction Type" is applicable to samples that have undergone extractions per the analytical methods. Enter "SEPF" for separatory funnel, "CLLE" for continuous liquid-liquid extraction without hydrophobic membrane, "CONH" for continuous liquid-liquid extraction with hydrophobic membrane, "SONC" for Sonication Extraction, "SOXH" for Soxhlet Extraction, or "PFEX" for Pressurized Fluid Extraction, as appropriate. For waste dilution, enter "WDIL". For the trace and low/medium volatile analytical methods, enter "PT" for purge-and-trap.

3.3.23 "Cleanup Types" is applicable to samples that have undergone certain cleanup processes by the analytical method. Enter "GPC", "Florisil", "Acid", or "Sulfur" separated by commas, as appropriate.

ED_004144A_00000101-00254

3.3.24 "Concentration Units" are the units in which the analytical result is reported. Enter "µg/L", "mg/L", or "µg/kg" as appropriate.

3.3.25 "Analyte" is identified in Exhibit C - Organic Target Analyte List and Contract Required Quantitation Limits, and must be reported in the order given in Exhibit C.

3.4 Reporting Forms

3.4.1 SDG Cover Page

3.4.1.1 Purpose

This form is used to list all samples analyzed within an SDG and provide certain analytical information and general comments. It is also the document that is signed by the Laboratory Manager or designee to authorize and release all data and deliverables associated with the SDG.

3.4.1.2 Instructions

Complete the header information according to the instructions in Exhibit B, Section 3.3. Complete the remainder of the form using the following instructions.

3.4.1.2.1 For samples analyzed using this SOW, enter "SOM02.4" for the SOW Number.

3.4.1.2.2 Under column "EPA Sample No.", enter each EPA Sample Number.

3.4.1.2.3 Under column "Lab Sample ID", enter each Laboratory sample identifier.

3.4.1.2.4 Under column "Analysis Method", enter an "X" under each Analytical Method scheduled for analysis for each EPA Sample Number.

3.4.1.2.5 Each SDG Cover Page shall be signed and dated, in original, by the Laboratory Manager or the Manager's designee to authorize the release and verify the contents of all data and deliverables associated with an SDG.

3.4.2 Organic Analysis Data Sheet [Form 1A-OR and Form 1B-OR]

3.4.2.1 Purpose

Form 1A-OR is used to tabulate and report sample analysis results for organic target analyte(s) per analytical method (see Exhibit C - Organic Target Analyte List and Contract Required Quantitation Limits).

Form 1B-OR is used to report sample analysis results for non-target analytes (e.g., analytes not listed in Exhibit C).

3.4.2.2 Instructions

Complete the header information according to the instructions in Exhibit B, Section 3.3. Complete the remainder of the form using the following instructions.

3.4.2.2.1 "Date Received" is the date (formatted MM/DD/YYYY) of sample receipt at the laboratory, as recorded on the TR/COC Record (i.e., the VTSR).

3.4.2.2.2 "Extract Concentrated" is applicable to samples that have undergone sample cleanup procedures. Enter "Y" for sample extracts concentrated after cleanup; otherwise enter "N".

ED_004144A_00000101-00255

3.4.2.2.3 "Soil Aliquot (VOA)" is applicable to medium level sample analysis by purge-and-trap analytical method where sample is extracted in methanol. Enter the methanol extract volume added to the reagent water in the purge tube for analysis in the unit of "µL".

3.4.2.2.4 "Purge Volume" is applicable to volatiles. Enter the volume purged in the unit of "mL".

3.4.2.2.5 "pH" is required for aqueous/water samples. Enter the pH determined. Report the pH value for soil/sediment samples, if the measurement is requested.

3.4.2.2.6 "Dilution Factor" is indicative of sample whether it is analyzed undiluted or at dilution. The dilution factor (DF) value shall be reported to one decimal place. Enter 1.0 for an undiluted sample with a dilution factor of 1.

3.4.2.2.7 "Cleanup Factor" is applicable to the sequential cleanup types reported in "Cleanup Types" field. Cleanup factor for each applicable cleanup procedure is determined per Exhibit D and reported in the order of the corresponding cleanup type separated as appropriate by a comma.

3.4.2.2.8 Under column "CAS No.", enter the CAS Number for each analyte as listed in Exhibit C - Organic Target Analyte List and Contract Required Quantitation Limits.

3.4.2.2.9 Under column "Concentration", enter for each analyte, the value of the result if the concentration or mass is greater than or equal to the MDL adjusted if necessary and corrected for any dilutions. If the concentration is less than the MDL, enter the CRQL for the analyte, adjusted if necessary and corrected for any dilutions. The concentration or mass result shall be reported to two significant figures.

NOTE: For analytes in a sample that require more than one dilution, the compliant result from the least diluted analysis shall be considered as the best analytical result for the sample. For analytes in a sample that require dilution, reanalysis, or re-extraction, when none of the results from these analyses are compliant, the result from the initial analysis shall be considered as the best analytical result for the sample. For non-detected analytes that do not require any further dilution, reanalysis, or re-extraction, the CRQLs from the initial analysis shall be considered as the best analytical result.

3.4.2.2.10 Under column "Q", enter result qualifiers as identified below. If additional qualifiers are used, their explicit definitions shall be included in the SDG Narrative.

3.4.2.2.10.1 The MDL obtained for a given preparation method, analysis method, and instrument shall be used for the qualification of the results for samples associated with that preparation method, analysis method, and instrument.

All values for result, CRQL, and MDL shall be in the same units prior to determining the appropriate qualifier.

ED_004144A_00000101-00256

3.4.2.2.10.2 Specified entries and their meanings are as follows:

U: The result was less than the MDL.

J: The reported value is less than the CRQL, but greater than or equal to the MDL. This flag is also used for all TICs.

B: The same analyte is found in the associated blank as well.

E: The analyte concentration exceeds the upper limit of the calibration range of the instrument established by the ICAL.

D: The reported value is from a dilution.

C: The identification of the analyte is confirmed by GC/MS when the primary analytical method employed is GC/ECD as appropriate.

A: The reported TIC is a suspected Aldol-condensation product.

N: The reported TIC is has a ≥ 85% match on the mass spectral library search.

P: The reported value is greater than 25% difference between the concentrations determined on two GC columns where applicable.

S: The reported value is determined using a single-point ICAL by GC/ECD analytical method, as appropriate.

H: The reported value is quantitated using peak heights rather than peak areas.

X: The reported value is with laboratory-defined flag. These flags are limited to the letters "X", "Y", and "Z".

3.4.2.2.11 Form 1B-OR shall be submitted for **every trace volatile, low/medium volatile, and semivolatile analysis,** including required dilutions, reanalyses, and blanks, even if no TICs are found. Forms 1B-OR are not required for requested MS/MSD or SIM analyses. See instructions in Exhibit D on TIC identification and quantitation.

3.4.3 Deuterated Monitoring Compound Recovery [Form 2A and 2B-OR] and Surrogate Recovery [Form 2C-OR]

3.4.3.1 Purpose

Form 2A-OR and 2B-OR are used to report the recoveries of the DMCs added to each volatile and semivolatile sample, including dilutions, reanalyses, blanks, and requested MS/MSDs.

Form 2C-OR is used to report the recoveries of the surrogate compounds added to each pesticide and Aroclor sample, blank, LCS, and MS/MSD.

3.4.3.2 Instructions

Complete the header information according to the instructions in Exhibit B, Section 3.3. Complete the remainder of the form using the following instructions.

3.4.3.2.1 For volatile and semivolatile samples, report the %R of each DMC to the nearest whole percentage point on Forms 2A-OR and 2B-OR.

ED_004144A_00000101-00257

For pesticide and Aroclor samples, report the %R of each surrogate to the nearest whole percentage point on Form 2C-OR.

3.4.3.2.2 Flag each DMC or surrogate recovery outside the QC limits with an asterisk ("*"). The asterisk shall be placed next to the result value.

3.4.3.2.3 Under column "TOT OUT" report the total number of DMC or surrogate recoveries that are outside the QC limits for each sample. If no DMC or surrogate recoveries were outside the limits, enter "0" (zero).

3.4.3.2.4 If the diluted sample is with DMC or surrogate percent recoveries outside the acceptance window, enter the %R values and flag with a "D" where applicable.

3.4.3.2.5 The pesticide and Aroclor surrogate recoveries shall be reported for **both** GC columns. Identify each GC column at the top of Form 2C-OR, entering the stationary phase in the "GC Column" field, and the internal diameter of the column in mm in the "ID" field.

3.4.3.2.6 The assignment of columns as "1" and "2" is left to the discretion of the Contractor when the analyses are performed by simultaneous injection into a two-column GC. The assignment of "GC Column 1" and "GC Column 2" shall be consistent across all reporting forms. If the analysis is **not** performed by simultaneous injection, then the assignment of GC column number shall be based on the chronological order of the two analyses.

3.4.3.2.7 The compound names listed in Exhibit D, Section 17, Table 3 (for Trace Volatiles, Low/Medium Volatiles, and Semivolatiles); Table 10 (for Pesticides); and Table 6 (for Aroclors) for all DMCs or surrogates applicable to the analytical method, shall be reported under each table along with their respective QC limits.

3.4.4 Matrix Spike/Matrix Spike Duplicate Recovery [Form 3A-OR]

3.4.4.1 Purpose

This form is used to report the results of the MS/MSD analyses for all applicable methods.

NOTE: Form 3A-OR shall only be submitted if the analyses of MS/MSD samples are requested or scheduled by the EPA Region. Submit form(s) for each MS/MSD performed.

3.4.4.2 Instructions

Complete the header information according to the instructions in Section 3.3. Include the EPA Sample Number for the Matrix Spike or Matrix Spike Duplicate, without the suffixes "MS" or "MSD". Complete the remainder of the form using the following instructions.

3.4.4.2.1 For pesticides and Aroclors, this form is required for each column. Enter the instrument ID, the stationary phase in the "GC Column" field, and the internal diameter of the column in mm in the "ID" field. The results reported on this order shall be consistent with the information reported on Form 10-OR.

3.4.4.2.2 Under column "SPIKE ADDED", enter the calculated concentration of each spike analyte to the same significant figure as reported for the sample concentration in the appropriate unit.

ED_004144A_00000101-00258

3.4.4.2.3 Under column "SAMPLE CONCENTRATION", enter the sample concentration of each spike analyte in the original sample in the appropriate unit. If a spike analyte is not detected in the original sample, enter "0" (zero) as the concentration for the analyte.

3.4.4.2.4 Under column "MS CONCENTRATION", enter the concentration of each spike analyte determined in the Matrix Spike sample.

3.4.4.2.5 Under column "MS %R", enter the calculated %R of each spiked analyte in the Matrix Spike sample to the nearest whole percent.

3.4.4.2.6 Under column "QC LIMITS %R", enter the %R limits for each spike analyte as specified in Exhibit D.

3.4.4.2.7 Flag each %R outside the QC limits with an asterisk ("*") next to the %R value in the "MS %R#" column.

3.4.4.2.8 Follow Sections 3.4.4.2.2 through 3.4.4.2.7 to complete the table for the MSD sample.

3.4.4.2.9 Under column "RPD", enter the calculated Relative Percent Difference (RPD) between the Matrix Spike recovery and the Matrix Spike Duplicate recovery. Report the RPD to the nearest whole percent.

3.4.4.2.10 Under column "QC LIMITS", enter the applicable QC limits for %R and RPD respectively as specified in Exhibit D.

3.4.4.2.11 Flag each RPD outside the QC limits with an asterisk ("*") next to the value in the "RPD" column.

3.4.4.2.12 Flag each %R outside the QC limits with an asterisk ("*") next to the value in the "%R" column.

3.4.5 Laboratory Control Sample Recovery [Form 3B-OR]

3.4.5.1 Purpose

This form is used to report the results of the analyses of LCSs for pesticides and Aroclors.

3.4.5.2 Instructions

Complete the header information according to the instructions in Section 3.3. Complete the remainder of the form using the following instructions.

3.4.5.2.1 "LCS Lot No." is applicable for identifying the LCS solution purchased from a third party. Enter the identification number used by the third party to identify the LCS lot, if available. Leave the field blank if the LCS solution was prepared in-house.

3.4.5.2.2 "Instrument ID", "GC Column", "ID", and "Date Analyzed" fields above each table are entered for each column applicable to pesticides and Aroclors.

3.4.5.2.3 Under column "AMOUNT ADDED", enter the calculated concentration of each spike analyte to the same significant figure as reported for the concentration in the appropriate unit.

3.4.5.2.4 Under column "AMOUNT RECOVERED", enter the concentration of each spike analyte in the LCS sample.

3.4.5.2.5 Under column "%R", enter the calculated %R of each spike analyte to the nearest whole percent.

ED_004144A_00000101-00259

3.4.5.2.6 Flag each %R value outside the QC limits with an asterisk (*) next to the value.

3.4.5.2.7 Complete the second table according to the instructions above for pesticides and Aroclor secondary column analysis as applicable.

3.4.6 Method Blank Summary [Form 4-OR]

3.4.6.1 Purpose

This form summarizes the samples including dilutions, reanalyses, re-extractions/reanalyses, and the requested MS/MSDs associated with each method blank analysis. The Contractor shall submit the appropriate Form 4-OR for each blank and for all methods. This form is not required for an instrument blank.

3.4.6.2 Instructions

Complete the header information according to the instructions in Section 3.3. The EPA Sample Number entered in the upper right-hand corner shall be the same number entered on Form 1-OR for the blank. Complete the remainder of the form using the following instructions.

3.4.6.2.1 "Instrument ID", "GC Column", "ID", "Date Analyzed", and "Time Analyzed" fields are entered for each column applicable to pesticide and Aroclor analyses. If the analyses were analyzed simultaneously, the information entered here shall be consistent with that on all other applicable forms.

3.4.6.2.2 "Date Analyzed" and "Time Analyzed" fields shall indicate the analysis on both primary and secondary columns (i.e., Time Analyzed: 11:00/11:50, or 11:00, 11:50).

3.4.6.2.3 "Cleanup (Y/N)" is applicable to method blanks that have undergone cleanup procedures. Enter "Y" if any cleanup procedure is performed; otherwise enter "N".

3.4.6.2.4 Under column "EPA SAMPLE No.", enter the EPA Sample Number of samples including LCSs, requested MS/MSDs, storage blanks, and volatile instrument blanks, associated with the reported method blank.

3.4.6.2.5 Under column "LAB SAMPLE ID", enter the Laboratory Sample Identifier for each reported sample under the first column.

3.4.6.2.6 Under column "LAB FILE ID", enter the Laboratory-assigned file Identifier of the analysis for each sample reported under the first column.

3.4.6.2.7 Under column "DATE/TIME ANALYZED", enter the date or time of the analysis of each sample. For volatiles and semivolatiles, enter the date of analysis. For pesticides and Aroclors, enter both analyses times for each column (i.e., 11:00/11:50, or 11:00, 11:50).

3.4.7 GC/MS Instrument Performance Check [Form 5-OR]. This form is not required for Level 2a deliverables.

3.4.7.1 Purpose

This form is used to report the results of the GC/MS instrument performance check (IPC) for the volatile and semivolatile methods, and to summarize the date and time of analyses for samples, including dilutions, reanalyses, calibration standards, blanks, and requested MS/MSDs associated with each analysis of the IPC solution.

ED_004144A_00000101-00260

3.4.7.2 Instructions

Complete the header information according to the instructions in Section 3.3. Complete the remainder of the form using the following instructions.

3.4.7.2.1 "BFB/DFTPP" is the compound used to tune the instrument. Enter "BFB" for volatiles or "DFTPP" for semivolatiles.

3.4.7.2.2 "Injection Date" is the date of injection of the IPC solution [4-bromofluorobenzene (BFB) for volatiles or Decafluorotriphenylphosphine (DFTPP) for semivolatiles]. Enter the date as MM/DD/YYYY.

3.4.7.2.3 "Injection Time" is the time of injection of the IPC solution (BFB for volatiles or DFTPP for semivolatiles). Enter time using military time format.

3.4.7.2.4 Under columns "m/e" and "ION ABUNDANCE CRITERIA" in the first table, enter the m/e value and the mass spectral ion abundance criteria for each IPC analysis as specified in Exhibit D.

3.4.7.2.5 Under column "% RELATIVE ABUNDANCE" in the first table, enter the percent relative abundance for the respective ion to the number of significant figures specified in Exhibit D.

NOTE: For both BFB and DFTPP, one or more of the high mass ions may exceed the abundance of the ion listed on the form as the nominal base peak [mass-to-charge ratio (m/z) 95 for BFB and m/z 198 for DFTPP]. Despite this possibility, all ion abundances shall be normalized to the nominal base peaks listed on Form 5-OR.

3.4.7.2.6 All relative abundances shall be reported as a number. If the relative abundance is zero, enter "0", not a dash or other non-numeric character. Where parentheses appear, enter the calculated percentage of the ion abundance of the mass given in Exhibit D.

3.4.7.2.7 Under column "EPA SAMPLE NO." in the second table, enter the EPA Sample Number for the applicable initial calibration, standards, ICVs, opening/closing CCVs, and all samples, including dilutions, reanalyses, blanks, and requested MS/MSDs associated to that IPC in chronological order, by time of analysis (using military time).

3.4.7.2.8 Under columns "LAB SAMPLE ID", "LAB FILE ID", "DATE ANALYZED", and "TIME ANALYZED" in the second table, enter the appropriate information according to Sections 3.4.6.2.4 - 3.4.6.2.7 for the respective analysis reported in the first column.

3.4.8 GC/MS Initial Calibration Data [Form 6A-OR]. This form is not required for Level 2a deliverables.

3.4.8.1 Purpose

This form contains the summary of an initial calibration of the GC/MS analytical methods (volatile and semivolatile). The five-point initial calibration associated to sample analyses is analyzed at the specific concentration levels described in Exhibit D. An initial calibration containing more than five standards may be performed, but only five standards demonstrating the linearity of the calibration at the specified concentration levels in Exhibit D are to be reported on the form.

ED_004144A_00000101-00261

3.4.8.2 Instructions

Complete the header information according to the instructions in Section 3.3. Complete the remainder of the form using the following instructions.

3.4.8.2.1 "Calibration Date(s)" is the date(s) of the calibration (entered as MM/DD/YYYY). If the calendar date changes during the calibration procedure, the inclusive dates shall be recorded.

3.4.8.2.2 "Calibration Time(s)" is the time of injections for the first and the last of the analyzed initial calibration standards using military time format.

3.4.8.2.3 "Length" is the GC column length in the unit of "m".

3.4.8.2.4 "Purge Volume" is applicable to volatiles. Enter the volume purged in the unit of "mL".

3.4.8.2.5 "Lab File ID" is the Laboratory File Identifier of the initial calibration standards. Enter the Laboratory File Identifier of the initial calibration standard at the lowest concentration level in the space provided. Enter the Laboratory File Identifier for each initial calibration standard in the order of low to high in the space provided after the "=" sign.

3.4.8.2.6 "RRF" is the Relative Response Factor (RRF) calculated for each target analyte and DMC in the initial calibration standards. Enter the concentration of each of the five standards after "RRF" in the spaces. For example, for a calibration standard concentration at 5.0 µg/L, enter 5.0 after "RRF" in the spaces in the top most row and the appropriate column header.

3.4.8.2.7 Under column "ANALYTE", enter all target analytes and DMC as applicable.

3.4.8.2.7.1 The Trace and Low/Medium Volatile target analytes shall be listed in the same order as in Exhibit D - Trace Concentrations of Volatile Organic Compounds Analysis, Table 4 - Technical Acceptance Criteria for Initial Calibration, Initial Calibration Verification, and Continuing Calibration Verification for Trace Volatile Organic Compounds, and Exhibit - D - Low/Medium Concentrations of Volatile Organic Compounds Analysis, Table 4 - Technical Acceptance Criteria for Initial Calibration, Initial Calibration Verification, and Continuing Calibration Verification for Volatile Organic Compounds.

3.4.8.2.7.2 The Semivolatile target analytes shall be listed in the same order as in Exhibit D - Semivolatile Organic Compounds Analysis, Table 5 - Technical Acceptance Criteria for Initial Calibration, Initial Calibration Verification, and Continuing Calibration Verification for Semivolatile Organic Compounds.

3.4.8.2.8 Under columns "$\overline{RRF}$" and "%RSD", enter the calculated mean RRF ($\overline{RRF}$) and the Percent Relative Standard Deviation (%RSD) for each target analyte and DMC reported under the "ANALYTE" column.

ED_004144A_00000101-00262

3.4.9 Initial Calibration of Single Component Analytes [Form 6B-OR and Form 6C-OR]. These forms are not required for Level 2a deliverables.

3.4.9.1 Purpose

These forms contain the summary of the initial calibration of single component pesticide target analytes and surrogates. For single component pesticide target analtyes and surrogates: mean RTs ($\overline{RT}$s), RT windows, CFs, mean Calibration Factor ($\overline{CF}$), and %RSD are calculated from the five Individual Standard Mixtures A and B or C at the concentrations specified in Exhibit D. Form 6B-OR is for reporting the RTs, $\overline{RT}$s, and RT windows; Form 6C-OR is for reporting $\overline{CF}$s, CFs, and %RSDs.

3.4.9.2 Instructions

Complete Form 6B-OR and Form 6C-OR for **each** GC column used for the five initial individual calibration standards. Complete the header information according to the instructions in Section 3.3. Complete the remainder of the form using the following instructions.

3.4.9.2.1 "Level (x CS1)" is the concentration of the five calibration standards as a multiplier of CS1 (Calibration Standard 1). Enter "1.0" for CS1 and 2.0, 4.0, 8.0, and 16.0 for the subsequent CS levels as specified in the Exhibit D in the spaces provided. If the CS5 standard is higher than 16 times CS1, enter the appropriate multiplier to one decimal place.

3.4.9.2.2 "Calibration Date(s)" is the date(s) of the calibration (entered as MM/DD/YYYY). Enter the dates of the first and the last ICAL standard analyses in the entire ICAL sequence [excluding the Resolution Check Standard (RESC), Performance Evaluation Mixture standard (PEM), and instrument blanks]. If the calendar date changes during the calibration procedure, the inclusive dates shall be recorded.

3.4.9.2.3 "Calibration Time(s)" is the time of injections for the first and last of the initial calibration standards using military time. Enter the times of the first and the last ICAL standard analyses in the entire ICAL sequence (excluding the RESC, PEM, and instrument blanks).

3.4.9.2.4 Under column "ANALTYE", enter all applicable target analytes and surrogates in the five initial calibration standards as specified in Exhibit D - Pesticides Analysis, Table 5 - Retention Time Windows for Single Component Analytes, Toxaphene, and Surrogates.

3.4.9.2.5 Under column "RT OF STANDARDS" on Form 6B-OR, enter the RT of each applicable target analyte and surrogate determined from each of the initial calibration standards in minutes to the hundredth place.

3.4.9.2.6 Under column "$\overline{RT}$" on Form 6B-OR, enter the calculated $\overline{RT}$ of each target analyte and surrogate determined from each of the five initial calibration standards.

3.4.9.2.7 Under column "RT WINDOW" on Form 6B-OR, enter the calculated RT window for each target analyte and surrogate using the specifications in Exhibit D. The lower limit and upper limit of the RT window shall be entered under "FROM" and "TO", respectively. If there are more than one set of surrogates

ED_004144A_00000101-00263

present due to Individual Standard Mixture A and B analysis for pesticides, enter only one set of RTs for the surrogates as appropriate.

3.4.9.2.8 Under column "CF OF STANDARDS" on Form 6C-OR, enter the CF of each applicable target analyte and surrogate determined from each of the initial calibration standards.

3.4.9.2.9 Under column "$\overline{CF}$" on Form 6C-OR, enter the calculated $\overline{CF}$ of each target analyte and surrogate determined from each of the five initial calibration standards.

3.4.9.2.10 Under column "%RSD" on Form 6C-OR, enter the calculated %RSD using the specifications in Exhibit D. If there are more than one set of surrogates present due to Individual Standard Mixture A and B analyses for pesticides, enter the appropriate values determined from the same set of surrogates used for the RT windows listed above in Section 3.4.9.2.7.

3.4.10 Initial Calibration of Multicomponent Analytes [Form 6D-OR and 6E-OR]. These forms are not required for Level 2a deliverables.

3.4.10.1 Purpose

These forms contain the summary of the initial calibration of multicomponent pesticide, Toxaphene, and Aroclor target analytes and surrogates. For multicomponent pesticide analyte, Toxaphene, and surrogates: $\overline{RT}$s, RT windows, CFs, $\overline{CF}$s, and %RSDs are calculated from the five Individual Standard Mixtures A and B or C at the concentrations specified in Exhibit D. For the applicable Aroclor target analytes and surrogates, the same parameters are determined from the five initial calibration standards at concentrations specified in Exhibit D. Form 6D-OR is for reporting RTs, $\overline{RT}$s, and RT windows; Form 6E-OR is for reporting CFs, $\overline{CF}$s, and %RSDs.

3.4.10.2 Instructions

Complete Form 6D-OR and Form 6E-OR for each GC column used for the five initial calibration standards of Toxaphene and Aroclors. Complete the header information according to the instructions in Section 3.3. Complete the remainder of the form using the following instructions.

3.4.10.2.1 "Level (x CS1)" is the concentration of the five calibration standards as a multiplier of CS1 (Calibration Standard 1). Enter "1.0" for CS1 and 2.0, 4.0, 8.0, and 16.0 for the subsequent CS levels as specified in the Exhibit D in the spaces provided. If the CS5 standard is higher than 16 times CS1, enter the appropriate multiplier to one decimal place.

3.4.10.2.2 "Calibration Date(s)" is the date(s) of the calibration (entered as MM/DD/YYYY). If the calendar date changes during the calibration procedure, the inclusive dates shall be recorded.

3.4.10.2.3 "Calibration Time(s)" is the injection times of the first and last of the initial calibration standards using military time.

3.4.10.2.4 Under column "ANALYTE", enter Toxaphene for the pesticide method and all applicable Aroclor target analytes for the Aroclor method in the five initial calibration standards as specified in Exhibit D - Pesticides Analysis, Table 5 - Retention Time Windows for Single Component Analytes, Toxaphene, and Surrogates, or Exhibit D - Aroclors Analysis,

ED_004144A_00000101-00264

Table 2 - Concentration Levels of Initial Calibration and Continuing Calibration Verification Standards and Technical Acceptance Criteria for Aroclors.

3.4.10.2.5 Under column "RT OF STANDARDS" on Form 6D-OR, enter the RT determined for each identified peak from the five individual initial calibration standards for Toxaphene and surrogates of the pesticide method, and each applicable Aroclor target analyte and surrogate of the Aroclor method. RTs shall be entered in minutes to the hundredth place.

3.4.10.2.6 Under column "$\overline{RT}$" on Form 6D-OR, enter the calculated $\overline{RT}$ of each identified peak for Toxaphene and applicable Aroclor target analytes and surrogates determined from each of the five initial calibration standards.

3.4.10.2.7 Under column "RT WINDOW" on Form 6D-OR, enter the calculated RT window for each identified peak of Toxaphene and surrogates as well as applicable Aroclor target analytes and surrogates using the specifications in Exhibit D. The lower limit and upper limit of the RT window shall be entered under "FROM" and "TO", respectively. If Aroclors 1016 and 1260 are analyzed as a combined standard Aroclor 1660, enter the surrogate RT window determined according to the specifications in Exhibit D.

3.4.10.2.8 Under column "CF OF STANDARDS" on Form 6E-OR, enter the CF for each identified peak of Toxaphene and surrogates as well as applicable Aroclor target analytes and surrogates determined from each of the initial calibration standards.

3.4.10.2.9 Under column "$\overline{CF}$" on Form 6E-OR, enter the calculated $\overline{CF}$ for each identified peak of Toxaphene and surrogates as well as applicable Aroclor target analytes and surrogates determined from each of the five initial calibration standards.

3.4.10.2.10 Under column "%RSD" on Form 6E-OR, enter the calculated %RSD for each identified peak using the specifications in Exhibit D. If Aroclors 1016 and 1260 are analyzed as a combined standard Aroclor 1660, enter the appropriate values determined from the same set of surrogates used for the RT windows listed above in Section 3.4.10.2.7.

3.4.11 Initial Calibration (Single Point) of Multicomponent Analytes [Form 6F-OR]. This form is not required for Level 2a deliverables.

3.4.11.1 Purpose

This form contains the summary of single point initial calibration of Toxaphene, applicable Aroclor target analytes, and surrogates. It is for reporting RTs, RT windows, and CFs.

3.4.11.2 Instructions

Complete Form 6F-OR for each GC column used for Toxaphene and Aroclor single point initial calibration standards. Complete the header information according to the instructions in Section 3.3. Complete the remainder of the form using the following instructions.

3.4.11.2.1 "Calibration Date(s)" is the date(s) of the calibration (entered as MM/DD/YYYY). If the calendar date changes during the calibration procedure, the inclusive dates shall be recorded.

ED_004144A_00000101-00265

3.4.11.2.2 "Calibration Time(s)" is the injection times of the first and last of the initial calibration standards using military time.

3.4.11.2.3 Under column "ANALYTE", enter Toxaphene for the pesticide method and all applicable Aroclor target analytes for the Aroclor method in the single point initial calibration standards as specified in Exhibit D. The target analytes shall be listed in the same order as in Exhibit D - Pesticides Analysis, Table 5 - Retention Time Windows for Single Component Analytes, Toxaphene, and Surrogates, or Exhibit - D - Aroclors Analysis, Table 2 - Concentration Levels of Initial Calibration and Continuing Calibration Verification Standards and Technical Acceptance Criteria for Aroclors.

3.4.11.2.4 Under column "AMOUNT (ng)", enter the amount of the analyte for each standard in the unit of "ng".

3.4.11.2.5 Under column "RT", enter the RT determined for each identified peak for Toxaphene and surrogates of the pesticide method and each applicable Aroclor target analyte and surrogate of the Aroclor method.

3.4.11.2.6 Under column "RT WINDOW", enter the calculated lower and upper limits for each identified peak of Toxaphene and applicable Aroclor target analytes and surrogates determined from the initial calibration standards. The lower and upper limits of the RT window shall be entered under "FROM" and "TO", respectively.

3.4.11.2.7 Under column "CALIBRATION FACTOR", enter the CF for each identified peak of Toxaphene and surrogates as well as applicable Aroclor target analytes and surrogates determined from each of the initial calibration standards.

3.4.12 Resolution Check Summary [Form 6G-OR]. This form is not required for Level 2a deliverables.

3.4.12.1 Purpose

This form contains the summary of the results for RESC, PEM, and Individual Standards A, B, or C (CS3) that shall begin each pesticide initial calibration sequence. This form is also used for reporting the PEM and Individual Standards A, B, or C as CCVs analyzed during the analytical sequence. Form 6G-OR is applicable for each analysis or each GC column used.

3.4.12.2 Instructions

Complete the header information as described in Section 3.3. Use the same assignment of first and second GC columns for reporting the initial calibration standards. Enter the EPA Sample Number for RESC, PEM, or CS3 as specified in Section 3.3.7. If simultaneous injections on a single GC column are used, the EPA Sample Number may be the same for both columns. If simultaneous injections are not used, use different suffixes to identify the standards. Complete the remainder of the form using the following instructions.

3.4.12.2.1 "Time Analyzed" is the injection time of the applicable RESC, PEM, and CS3 of pesticide initial calibration and the PEM and CS3 continuing calibration standards using military time.

3.4.12.2.2 Under column "ANALYTE", enter each analyte as specified in Exhibit D, in RT order, including both surrogate compounds.

3.4.12.2.3 Under column "RT", enter the RT for each target analyte and surrogate reported under column "ANALYTE".

ED_004144A_00000101-00266

3.4.12.2.4 Under column "RESOLUTION(%)", enter the calculated percent resolution between each pair of the analytes. Enter the resolution between the first and second peaks on the line for the first analyte listed. Enter the resolutions for the subsequent analyte pairs until all resolutions for the applicable analyte pairs are entered.

3.4.13 Initial Calibration Verification and Continuing Calibration Verification for GC/MS [Form 7A-OR]. This form is not required for Level 2a deliverables.

3.4.13.1 Purpose

This form contains the summary of the ICV and CCV for volatile and semivolatile analyses applicable to GC/MS methods. The Contractor shall submit this form for each associated ICV, and opening and closing CCV relevant to sample analysis.

3.4.13.2 Instructions

Complete the header information according to the instructions in Section 3.3. Complete the remainder of the form using the following instructions.

3.4.13.2.1 "Time" is the analysis time of the ICV or CCV. Enter time using military time.

3.4.13.2.2 "Init. Calib Date(s)" is for the initial calibration standards associated with the ICV and CCV. Enter dates in the same format as in Section 3.4.8.2.1. Give inclusive dates if the initial calibration is performed over more than one date.

3.4.13.2.3 "EPA Sample No." is for the ICV or CCV. Enter the appropriate EPA Sample Number following the naming convention as specified in Section 3.3, Table 5 - Codes for Labeling Data.

3.4.13.2.4 "Init. Calib Time(s)" is for the initial calibration standards associated with the ICV and CCV. Enter the corresponding times using military time.

3.4.13.2.5 "Length" is the GC column length in the unit of "m".

3.4.13.2.6 "Purge Volume" is applicable to volatiles. Enter the volume purged in the unit of "mL".

3.4.13.2.7 Under column "ANALYTE", enter the target analytes and DMCs applicable to the specific methods as specified in Exhibit D.

3.4.13.2.7.1 The Trace and Low/Medium Volatile target analytes shall be listed in the same order as in Exhibit D - Trace Concentrations of Volatile Organic Compounds Analysis, Table 4 - Technical Acceptance Criteria for Initial Calibration, Initial Calibration Verification, and Continuing Calibration Verification for Trace Volatile Organic Compounds, and Exhibit D - Low/Medium Concentrations of Volatile Organic Compounds Analysis, Table 4 - Technical Acceptance Criteria for Initial Calibration, Initial Calibration Verification, and Continuing Calibration Verification for Volatile Organic Compounds.

3.4.13.2.7.2 The Semivolatile target analytes shall be listed in the same order as in Exhibit D - Semivolatile Organic Compounds Analysis, Table 5 - Technical Acceptance Criteria for Initial Calibration, Initial Calibration Verification, and Continuing Calibration Verification for Semivolatile Organic Compounds.

ED_004144A_00000101-00267

3.4.13.2.8 Under column "RRF", enter the RRF determined from the associated initial calibration standards for each target analyte and DMC reported under column "ANALYTE".

3.4.13.2.9 The space in "RRF__" is for reporting the concentration of the ICV or CCV applicable to the method as specified in Exhibit D. For example, 50 in the space provided indicates that the concentration of the ICV or CCV is at 50 µg/L as specified for the low/medium volatiles method.

3.4.13.2.10 Under column "RRF__", enter the calculated RRF value for each target analyte and DMC reported under column "ANALYTE" for the ICV or CCV.

3.4.13.2.11 Under column "MIN RRF", enter the appropriate values for the ICV for each target analyte and DMC as specified in Exhibit D. Enter the appropriate values for either opening or closing CCV for each target analyte and DMC as specified in Exhibit D. For a CCV serving as both opening and closing CCV, enter the values for opening CCV.

3.4.13.2.12 Under column "%D", enter the calculated Percent Difference (%D) for each target analyte and DMC reported under column "ANALYTE".

3.4.13.2.13 Under column "MAX %D", enter the appropriate values for the ICV each target analyte and DMC as specified in Exhibit D. Enter the appropriate values for either opening or closing CCV for each target analyte and DMC as specified in Exhibit D. For a CCV serving as both opening and closing CCV, enter the values for opening CCV.

3.4.14 Pesticides Performance Evaluation Mixture Calibration Verification Summary [Form 7B-OR]. This form is not required for Level 2a deliverables.

3.4.14.1 Purpose

This form contains the results of pesticide PEMs that bracket each 12-hour analytical sequence. The Contractor shall submit this form for each PEM associated to the analytical sequence of sample analysis for each GC column.

3.4.14.2 Instructions

Complete Form 7B-OR for each PEM reported on Form 8B-OR. Complete the header information according to the instructions in Section 3.3. Complete the remainder of the forms using the following instructions.

3.4.14.2.1 "Init. Calib Date(s)" is for the initial calibration standards associated with the CCV. Enter the same dates in the same format as in Section 3.4.9.2.2. Give inclusive dates if the initial calibration is performed over more than one date.

3.4.14.2.2 "EPA Sample No. (PEM##)" is for the PEM. Enter the appropriate EPA Sample Number following the naming convention as specified in Section 3.3, Table 5 - Codes for Labeling Data.

3.4.14.2.3 "Instrument Blank EPA Sample No. (PIBLK##)" and "Instrument Blank Lab Sample ID" are for the instrument blank analyzed right before the CCV in the analytical sequence. Enter the EPA Sample Number and the laboratory sample identifier in the respective fields. For reporting the instrument blank, the laboratory shall follow the naming convention as specified in

ED_004144A_00000101-00268

Section 3.3, Table 5 - Codes for Labeling Data. Leave the fields blank for the PEM starting the initial calibration sequence.

3.4.14.2.4 "Time Analyzed" are for the time of the instrument blank and PEM pairs. Enter time using military time. Leave the fields blank for instrument blank when the PEM is starting the initial calibration sequence.

3.4.14.2.5 Under column "RT", enter the RT determined in PEM for each target analyte and surrogate reported under column "ANALYTE" in the table.

3.4.14.2.6 Under column "RT window", enter the calculated lower and upper limits for each target analyte and surrogate determined from the associated initial calibration standards. The lower and upper limits of the RT window shall be entered under "FROM" and "TO", respectively.

3.4.14.2.7 Under column "CALC AMOUNT (ng)", enter the calculated amount or each target analyte and surrogate under column "ANALYTE". The values shall be reported to three decimal places with the unit of "ng".

3.4.14.2.8 Under column "NOM AMOUNT", enter the nominal amount for each analyte and surrogate that are under column "ANALYTE". The values shall be reported to three decimal places with the unit of "ng".

3.4.14.2.9 Under column "%D", enter the calculated %D between the calculated amount and nominal amount for each analyte according to Exhibit D.

3.4.14.2.10 "4,4'-DDT %Breakdown", "Endrin %Breakdown", and "Combined %Breakdown" are for the calculated Percent Breakdown (%Breakdown) as specified in Exhibit D.

3.4.15 Continuing Calibration Verification Summary [Form 7C-OR]. This form is not required for Level 2a deliverables.

3.4.15.1 Purpose

This form contains the summary of the applicable CCV for pesticide and Aroclor analyses by GC/ECD methods. The Contractor shall submit this form for each associated opening and closing CCV relevant to sample analysis for each GC column.

3.4.15.2 Instructions

Complete Form 7C-OR for each CCV standard reported on Form 8B-OR. Complete the header information according to the instructions in Section 3.3. Complete the reminder of the forms using the following instructions.

3.4.15.2.1 "Init. Calib Date(s)" is for the initial calibration standards associated to the CCV. Enter the same dates in the same format as in Section 3.4.9.2.2. Give inclusive dates if the initial calibration is performed over more than one date.

3.4.15.2.2 "EPA Sample No." is for the CCV. Enter the appropriate EPA Sample Number following the naming convention as specified in Section 3.3, Table 5 - Codes for Labeling Data.

3.4.15.2.3 "Instrument Blank EPA Sample No." and "Instrument Blank Lab Sample ID" are for the instrument blank analyzed right before the CCV in the analytical sequence. Enter the EPA Sample Number and the laboratory identifier in the respective fields.

ED_004144A_00000101-00269

For reporting the instrument blank, the laboratory shall follow the naming convention as specified in Section 3.3, Table 5 - Codes for Labeling Data.

3.4.15.2.4 "Time Analyzed" are for the time of the instrument blank and CCV (CS3) pairs. Enter time using military time.

3.4.15.2.5 Under column "ANALYTE", enter the target analytes and surrogates applicable to the specific methods as specified in Exhibit D. The target analytes shall be listed in the same order as in Exhibit D - Pesticides Analysis, Table 5 - Retention Time Windows for Single Component Analytes, Toxaphene, and Surrogates, or Exhibit D - Aroclors Analysis, Table 2 - Concentration Levels of Initial Calibration and Continuing Calibration Verification Standards and Technical Acceptance Criteria for Aroclors.

3.4.15.2.6 Under column "RT", enter the RT determined in the CCV for each target analyte and surrogate reported under column "ANALYTE".

3.4.15.2.7 Under column "RT window", enter the calculated lower and upper limits for each target analyte and surrogate determined from the associated initial calibration standards. The lower and upper limits of the RT window shall be entered under "FROM" and "TO", respectively.

3.4.15.2.8 Under column "$\overline{CF}$", enter the $\overline{CF}$ determined from the associated initial calibration standards for each target analyte and surrogate reported under column "ANALYTE".

3.4.15.2.9 Under column "CF", enter the calculated CF value for each target analyte and surrogate reported under column "ANALYTE" for the CCV.

3.4.15.2.10 Under column "%D", enter the calculated %D value between the CF and $\overline{CF}$ for each target analyte and surrogate reported under column "ANALYTE" for the CCV.

3.4.16 Multi-component Continuing Calibration Verification Summary [Form 7D-OR]. This form is not required for Level 2a deliverables.

3.4.16.1 Purpose

This form contains the summary of the results for Toxaphene and Aroclor CCVs (CS3). The contractor shall submit this form for each associated opening and closing Toxaphene and Aroclor CCVs relevant to sample analysis for each GC column.

3.4.16.2 Instructions

Complete this form for each Toxaphene and Aroclor CCV reported on Form 8B-OR. Complete the header information according to the instructions in Section 3.3. Complete the remainder of the forms using the following instructions.

3.4.16.2.1 "Init. Calib Date(s)" is for the initial calibration standards associated to the CCV. Enter the same dates in the same format as in Section 3.4.9.2.2. Give inclusive dates if the initial calibration is performed over more than one date.

3.4.16.2.2 "Instrument Blank EPA Sample No." and "Instrument Blank Lab Sample ID" are for the instrument blank analyzed right before the Toxaphene or Aroclor CCV in the analytical sequence. Enter the EPA Sample Number and the laboratory identifier in the respective fields. For reporting the instrument blank, the laboratory shall follow the naming convention as specified in Section 3.3, Table 5 - Codes for Labeling Data.

ED_004144A_00000101-00270

3.4.16.2.3 "EPA Sample No." is for the Toxaphene and Aroclor CCV. Enter the appropriate EPA Sample Number following the naming convention as specified in Section 3.3, Table 5 - Codes for Labeling Data.

3.4.16.2.4 "Time Analyzed" are for the time of the instrument blank and CCV (CS3) pairs. Enter time using military time.

3.4.16.2.5 Under column "ANALYTE", enter the target analytes and surrogates applicable to the specific methods as specified in Exhibit D. The target analytes shall be listed in the same order as in Exhibit D - Pesticides Analysis, Table 5 - Retention Time Windows for Single Component Analytes, Toxaphene, and Surrogates, or Exhibit D - Aroclors Analysis, Table 2 - Concentration Levels of Initial Calibration and Continuing Calibration Verification Standards and Technical Acceptance Criteria for Aroclors.

3.4.16.2.6 Under column "RT", enter the RT determined in the CCV (CS3) for each identified peak of each target analyte and surrogate reported under column "ANALYTE".

3.4.16.2.7 Under column "RT Window", enter the calculated lower and upper limits for each identified peak of each target analyte and surrogate determined from the associated initial calibration standards. The lower and upper limits of the RT window shall be entered for each corresponding peak under "FROM" and "TO", respectively.

3.4.16.2.8 Under column "$\overline{CF}$", enter the $\overline{CF}$ determined from the associated initial calibration standards for each identified peak of each target analyte and surrogate reported under column "ANALYTE".

3.4.16.2.9 Under column "CF", enter the calculated CF value for each identified peak of each target analyte and surrogate reported under column "ANALYTE" for the CCV.

3.4.16.2.10 Under column "%D", enter the calculated %D value between CF and $\overline{CF}$ for each identified peak of each target analyte and surrogate reported under column "ANALYTE" for the CCV.

3.4.17 Internal Standard Area and Retention Time Summary [Form 8A-OR]. This form is not required for Level 2a deliverables.

3.4.17.1 Purpose

This form contains the summary of peak areas and RTs of the internal standards in all volatile and semivolatile calibration standards and samples, including dilutions, reanalyses, and blanks. This form shall be completed for each analytical sequence with either the initial calibration or opening CCV associated to the sample analyses.

3.4.17.2 Instructions

Complete the header information according to Section 3.3. Complete the remainder of the form using the following instructions. If samples are analyzed immediately following an initial calibration, this form shall be completed with the CCV or mid-level calibration standard of the initial calibration (CS3) as the equivalent of an opening CCV. This form can be modified to accommodate more than three internal standards when necessary.

ED_004144A_00000101-00271

3.4.17.2.1 "Init. Calib Date(s)" is for the initial calibration standards associated to the CCV. Enter dates in the same format as in Section 3.4.8.2.1. Give inclusive dates if the initial calibration is performed over more than one date.

3.4.17.2.2 "EPA Sample No." is for the CCV or the mid-level initial calibration standard CS3. Enter the appropriate EPA Sample Number following the naming convention as specified in Section 3.3, Table 5 - Codes for Labeling Data.

3.4.17.2.3 "Time Analyzed" is for reporting the injection time of the CCV or the mid-level initial calibration standard CS3. Enter time using military time.

3.4.17.2.4 For the "IS AREA" in the header column of the table, report "IS1 AREA" for the first internal standard, "IS2 AREA" for the second internal standard, and "IS3 AREA" for the third internal standard. Additional Form(s) 8A-OR shall be used for additional internal standards, and the number after "IS" incremented accordingly.

3.4.17.2.5 "EPA SAMPLE NO." under the first column is for reporting EPA Sample Numbers for all samples including dilutions, reanalyses, blanks, and requested MS/MSDs that are associated to the CCV or the mid-level initial calibration standard CS3.

3.4.17.2.6 Under column "IS AREA", enter the area responses of the internal standards measured in the CCV or the mid-level initial calibration standard CS3 in the row "12 HOUR STD" in the first column. Enter the calculated upper and lower limits of the areas for each internal standard per specifications in Exhibit D in the rows "UPPER LIMIT" and "LOWER LIMIT", respectively. Enter the area responses of the internal standards measured in each sample reported in the first column.

3.4.17.2.7 Under column "RT", enter the RTs of the internal standards determined in the CCV or the mid-level initial calibration standard CS3 in the row "12 HOUR STD" in the first column. Enter the calculated upper and lower limits of the RTs for each internal standard per specifications in Exhibit D in the rows "UPPER LIMIT" and "LOWER LIMIT", respectively. Enter the RTs of the internal standards measured in each sample reported in the first column.

3.4.17.2.8 If any internal standard area or RT is outside the upper or lower limits as specified in Exhibit D, flag the outlier with an asterisk ("*") to the right of the reported value.

3.4.17.2.9 Report under the table, the compound names listed in Exhibit D, Section 17, Table 9, for all internal standards in the header columns. For example, IS1 = Chlorobenzene-d_5. In addition, report the area and RT upper and lower limits specified in Exhibit D.

3.4.18 Analytical Sequence [Form 8B-OR]. This form is not required for Level 2a deliverables.

3.4.18.1 Purpose

This form contains the summary of the analytical sequence for pesticide and Aroclor analyses. This form shall include the calibration standards, samples, blanks, LCSs, and MS/MSDs within a particular analytical sequence. The form is submitted for each column used for the analyses.

ED_004144A_00000101-00272

3.4.18.2 Instructions

Complete the header information according to the instructions in Section 3.3. Complete the remainder of the form using the following instructions.

3.4.18.2.1 "Init. Calib Date(s)" is for the initial calibration standards associated to the CCV. Enter the same dates in the same format as in Section 3.4.9.2.2. Give inclusive dates if the initial calibration is performed over more than one date.

3.4.18.2.2 "Init. Calib Time(s)" is for the initial calibration standards associated with the CCV. Enter the same times in the same format as in Section 3.4.9.2.3.

3.4.18.2.3 "SURROGATE ( ):__" is for the surrogates in the GC/ECD methods and $\overline{RT}$s from initial calibration as specified in Exhibit D. Enter surrogate names, TCX for Tetrachloro-m-xylene and DCB for Decachlorobiphenyl, in the parentheses provided after "SURROGATE 1" and "SURROGATE 2" respectively; and enter the $\overline{RT}$ for each surrogate respectively in the space provided on Form 8B-OR.

3.4.18.2.4 Under column "EPA SAMPLE NO.", enter every analysis associated with a particular analytical sequence as specified in Exhibit D. The Contractor shall include all samples analyzed within the reported analytical sequence. Enter ZZZZZ as the EPA Sample Number to indicate any sample or laboratory QC that is not part of the SDG.

3.4.18.2.5 Under column "LAB FILE ID", enter the unique lab file identifier for each analysis reported in the column "EPA SAMPLE NO.".

3.4.18.2.6 Under column "DATE ANALYZED", enter the date using the format of MM/DD/YYYY.

3.4.18.2.7 Under column "TIME ANALYZED", enter the time of each analysis reported in the column "EPA SAMPLE NO.". Enter time using military time.

3.4.18.2.8 Under columns "SUR 1 RT#" and "SUR 2 RT#", enter the RTs for both surrogates determined in each analysis. Flag any RT value which does not meet the contract requirements by placing an asterisk ("*") to the right of the reported value.

3.4.18.2.9 If the RT cannot be calculated due to interfering peaks, leave the "RT" column blank for that surrogate, enter an asterisk in the last column, and document the problem in the SDG Narrative.

3.4.18.2.10 Multiple forms shall be submitted with consistent header information in order to include all analyses for a particular analytical sequence.

3.4.19 Florisil Cartridge Check [Form 9A-OR]. This form is not required for Level 2a deliverables.

3.4.19.1 Purpose

This form contains the summary of the results for the Florisil Cartridge check analysis with the specific lot of the Florisil Cartridge used for Florisil cleanup.

ED_004144A_00000101-00273

3.4.19.2 Instructions

Complete the header information according to the instructions in Section 3.3. Enter the Case Number and SDG Number for the current data package, regardless of the original Case for which the cartridge check was performed. Complete the remainder of the form using the following instructions.

3.4.19.2.1 "Florisil Cartridge Lot Number" is for the Lot Number of the Florisil cartridge used for all sample extracts during the Florisil cleanup process.

3.4.19.2.2 Under column "ANALYTE" in the first table, enter the analyte names for the target analytes included in the Florisil Cartridge check solution as specified in Exhibit D.

3.4.19.2.3 Under columns "SPIKE ADDED (ng)" and "SPIKE RECOVERED (ng)" in the upper table, enter the amount of each spike analyte added and the calculated amount of the same analyte recovered with a unit of "ng" as specified in Exhibit D.

3.4.19.2.4 Under column "%R#" in the first table, enter the calculated %R for each spike analyte as specified in Exhibit D. Flag any recovery value that is outside the QC limits as specified in Exhibit D by placing an asterisk ("*") to the right of the reported value.

3.4.19.2.5 Under column "QC LIMITS" in the first table, enter the low and high limits as specified in Exhibit D.

3.4.19.2.6 Under column "EPA SAMPLE NO." in the second table, enter the EPA Sample Number for each sample and blank within the SDG that has undergone the Florisil cleanup procedure using this Florisil Cartridge lot.

3.4.19.2.7 Under column "LAB SAMPLE ID" in the second table, enter the unique laboratory sample identifier for each reported sample in the column under "EPA SAMPLE NO.".

3.4.19.2.8 Under columns "DATE ANALYZED 1" and "DATE ANALYZED 2", enter the dates in the format of DD/MM/YYYY for each reported sample analyzed on two GC columns respectively. Leave "DATE ANALYZED 2" blank if the second column analysis was not performed.

3.4.20 GPC Calibration Verification [Form 9B-OR]. This form is not required for Level 2a deliverables.

3.4.20.1 Purpose

This form contains the summary of the results for GPC Calibration Verification analysis when samples have undergone GPC cleanup.

3.4.20.2 Instructions

Complete the header information according to the instructions in Section 3.3. Enter the Case Number and SDG Number for the current data package, regardless of the original Case for which the cartridge check was performed. Complete the remainder of the form using the following instructions.

3.4.20.2.1 "GPC Column" is for reporting the identifier of the GPC column.

3.4.20.2.2 Under column "ANALYTE" in the first table, enter the analyte names for the target analytes included in the GPC Calibration Verification solution as specified in Exhibit D.

ED_004144A_00000101-00274

3.4.20.2.3 Under columns "SPIKE ADDED (ng)" and "SPIKE RECOVERED (ng)" in the first table, enter the amount of each spike analyte added and the calculated amount of the same analyte recovered with a unit of "ng" as specified in Exhibit D.

3.4.20.2.4 Under column "%R#" in the first table, enter the calculated %R for each spike analyte as specified in Exhibit D. Flag any recovery value that is outside the QC limits as specified in Exhibit D by placing an asterisk ("*") to the right of the reported value.

3.4.20.2.5 Under column "QC LIMITS" in the first table, enter the low and high limits as specified in Exhibit D.

3.4.20.2.6 Under column "EPA SAMPLE NO." in the second table, enter the EPA Sample Number for each sample and blank within the SDG that has undergone the GPC cleanup process.

3.4.20.2.7 Under column "LAB SAMPLE ID" in the second table, enter the unique laboratory sample identifier for each reported sample in the column under "EPA SAMPLE NO.".

3.4.20.2.8 Under column "GPC CLEANUP DATE", enter the date in the format of MM/DD/YYYY that the sample was subjected to GPC cleanup.

3.4.21 Identification Summary for Single component Analytes [Form 10A-OR]. This form is not required for Level 2a deliverables.

3.4.21.1 Purpose

This form contains the summary of the concentrations of all single component target analytes that are detected on both GC columns. This form shall be submitted for each applicable sample, including dilutions, reanalyses, blanks, LCSs, and MS/MSDs.

3.4.21.2 Instructions

Complete the header information according to the instructions in Section 3.3. Complete the remainder of the form using the following instructions.

3.4.21.2.1 Under column "ANALYTE", enter the analyte name as appears on Form 1A-OR for each single component pesticide analyte that is positively identified on both columns.

3.4.21.2.2 Under column "RT", enter the RTs of the analytes for each column designated as 1 and 2, respectively. Under column "RT WINDOW", enter the determined lower and upper RT windows for the same analyte from the associated initial calibration standards. The lower and upper limits shall be entered under "FROM" and "TO" for each column designated 1 and 2, respectively.

3.4.21.2.3 Under column "CONCENTRATION", enter the calculated concentration for each column designated 1 or 2, respectively. The concentrations shall be in the same units as that reported on Form 1A-OR.

3.4.21.2.4 Under column "%D", enter the calculated %D between the two concentrations for the designated columns 1 and 2 entered on this form. %D values shall be reported to the same significant figures as specified in Exhibit D. Flag any %D value that is greater than 25% by placing an asterisk ("*") to the right of the reported value.

ED_004144A_00000101-00275

3.4.21.2.5 Multiple forms shall be submitted with consistent header information in order to include all target analytes that are positively identified on both columns.

3.4.22 Identification Summary for Multicomponent Analytes [Form 10B-OR]. This form is not required for Level 2a deliverables.

3.4.22.1 Purpose

This form contains the summary of the concentrations of the multicomponent target analyte Toxaphene for pesticide analysis and Aroclor target analytes for Aroclor analysis where the reported target analytes are detected on both GC columns. This form shall be submitted for each applicable sample, including dilutions, reanalyses, blanks, LCSs, and MS/MSDs.

3.4.22.2 Instructions

Complete the header information according to the instructions in Section 3.3. Complete the remainder of the form using the following instructions.

3.4.22.2.1 Under column "ANALYTE", enter the analyte name as appears on Form 1A-OR for each multicomponent pesticide target analyte, Toxaphene, and Aroclor target analytes that are positively identified on both columns.

3.4.22.2.2 Under column "RT", enter the RT of each identified peak for the analytes for each column designated as 1 and 2, respectively.

3.4.22.2.3 Under column "RT WINDOW", enter the determined lower and upper RT windows of each corresponding peak for the same analyte from the associated initial calibration standards. The lower and upper limits shall be entered under "FROM" and "TO" for each column designated 1 and 2, respectively.

3.4.22.2.4 Under column "CONCENTRATION" and sub-column "PEAK", enter the calculated concentration of each identified peak for each column designated 1 or 2, respectively. The concentration values shall be unrounded that will fit the field and in the same units as that reported on Form 1A-OR.

3.4.22.2.5 Under column "CONCENTRATION" and sub-column "MEAN", enter the calculated mean concentration from the peak concentrations for each reported analyte for each column designated 1 and 2, respectively. The mean concentration values shall be rounded to the same significant figures as the values reported on Form 1A-OR.

3.4.22.2.6 Under column "%D", enter the calculated %D between the two concentrations for the designated columns 1 and 2 entered on this form. %D values shall be reported to the same significant figures as specified in Exhibit D. Flag any %D value that is greater than 25% by placing an asterisk ("*") to the right of the reported value.

3.4.22.2.7 Multiple forms shall be submitted with consistent header information in order to include all target analytes that are positively identified on both columns.

ED_004144A_00000101-00276

3.5 Sample Log-In Sheet [Form DC-1]

3.5.1 Purpose

This form is used to document the receipt and inspection of samples and containers. At least one original Form DC-1 is required for each sample shipping container (e.g., cooler). If the samples in a single sample shipping container must be assigned to more than one SDG, the original Form DC-1 shall be placed with the deliverables for the SDG that has the lowest alpha-numeric number and a copy of Form DC-1 shall be placed with the deliverables for the other SDG(s). The copies should be identified as "copy(ies)", and the location of the original should be noted on the copies.

3.5.2 Instructions

3.5.2.1 Sign and date the airbill. (If an airbill is not received, include a hardcopy receipt requested from the shipping company or a printout of the shipping company's electronic tracking information).

3.5.2.2 Examine the shipping container and record the presence/absence of custody seals and their condition (i.e., intact, broken) in Item 1.

3.5.2.3 Record the custody seal numbers in Item 2.

3.5.2.4 Open the container, remove the enclosed sample documentation, and record the presence/absence of EPA forms (i.e., TR/COC Records, packing lists) and airbills or airbill stickers in Items 3 and 4. Specify if there is an airbill present or an airbill sticker in Item 4. Record the airbill or sticker number in Item 5.

3.5.2.5 Remove the samples from the shipping container(s), examine the samples and the Sample Tags (if present), and record the condition of the sample bottles (i.e., intact, broken, leaking) and presence or absence of Sample Tags in Items 6 and 7.

3.5.2.6 Record the presence or absence of a shipping container temperature indicator bottle in Item 8.

3.5.2.7 Record the shipping container temperature in Item 9. If ice is present, that shall be noted in the "Remarks" column.

3.5.2.8 Review the sample shipping documents and compare the information recorded on all the documents and samples and mark the appropriate answer in Item 10.

3.5.2.9 The log-in date should be recorded at the top of Form DC-1; record the date and time of shipping container receipt at the laboratory in Items 11 and 12.

3.5.2.10 If there are no problems observed during receipt, sign and date (include the time) Form DC-1 and the TR/COC Record, and write the sample numbers in the "EPA Sample #" column.

3.5.2.11 Record the appropriate Sample Tags and assigned laboratory numbers, if applicable.

3.5.2.12 Any comments should be made in the "Remarks" column.

3.5.2.13 For Items 1, 3, 4, 6, 7, 8, and 10, circle the appropriate response. Responses can be underlined if this form is completed by automated equipment. Unused columns and spaces shall be crossed out, initialed, and dated.

ED_004144A_00000101-00277

3.5.2.14 If there are problems observed during receipt or an answer marked with an asterisk (e.g., "absent*") was circled, contact SMO and document the contact as well as resolution of the problem on a CLP Communication Log and in the SDG Narrative. Following resolution, sign and date the forms as specified in the preceding paragraph and note, where appropriate, the resolution of the problem.

3.6 Full Organics Complete SDG File (CSF) Inventory Sheet [Form DC-2]

3.6.1 Purpose

The CSF Inventory Sheet is used to record both the inventory of CSF documents and the number of documents in the original Sample Data Package which is sent to the EPA Region.

3.6.2 Instructions

3.6.2.1 Organize all EPA-CSF documents as described in Exhibit B, Sections 2.0 and 3.0. Assemble the documents in Exhibit B, Section 2.0 in the order specified on Form DC-2, and stamp each page with the consecutive number. Inventory the CSF by reviewing the document numbers and recording page number ranges in the columns provided on Form DC-2. The Contractor shall verify and record in the "Comments" section on Form DC-2 all intentional gaps in the page numbering sequence (for example, "page numbers not used, XXXX-XXXX, XXXX-XXXX"). For example, when filling out the page numbers for the "Sample Data" section on Form DC-2, enter the page number of the first Form 1A-OR of the sample analysis under the "From" column, and the last page of the raw data of the last sample analysis under the "To" column. The subsequent lines under the "Sample Data" section may be left blank. If there are no documents for a specific document type, enter an "NA" in the empty space.

3.6.2.2 Certain laboratory-specific documents related to the CSF may not fit into a clearly defined category. The laboratory should review Form DC-2 to determine if it is most appropriate to place them under Categories 99, 100, 102, and 103. Category 102 should be used if there is no appropriate previous category. These types of documents should be described or listed in the blanks under each appropriate category.

3.6.2.3 If it is necessary to insert new or inadvertently omitted documents, the Contractor shall follow these steps:

- Number all documents to be inserted with the next sequential numbers and file the inserts in their logical positions within the CSF (e.g., document to be inserted between pages 6 and 7 shall be numbered as 6a, 6b, 6c, etc.). Identify where the inserts are filed in the CSF by recording the document numbers and their locations under the "Other Records" section of Form DC-2 (e.g., documents to be inserted between pages 6 and 7 shall be numbered as 6a, 6b, 6c, etc.).

4.0 DATA REPORTING FORMS

The data reporting forms are shown on the following pages.

ED_004144A_00000101-00278

THIS PAGE INTENTIONALLY LEFT BLANK

ED_004144A_00000101-00279

EXHIBIT B

ORGANIC FORMS

ED_004144A_00000101-00280

THIS PAGE INTENTIONALLY LEFT BLANK

ED_004144A_00000101-00281

SDG COVER PAGE

Lab Name: _____ Contract: _____

Lab Code: _____ Case No.: _____ MA No.: _____ SDG No.: _____

SOW No.: _____

EPA Sample No.	Lab Sample ID	Analysis Method					
		Trace VOA	Low Med VOA	SVOA	SVOA SIM	PEST	ARO

I certify that this data package is in compliance with the terms and conditions of the contract, both technically and for completeness, for other than the conditions detailed in the SDG Narrative. Release of the data contained in this hardcopy Complete SDG File and in the electronic data submitted has been authorized by the Laboratory Manager or the Manager's designee, as verified by the following signature.

Signature: _____ Name: _____

Date: _____ Title: _____

ED_004144A_00000101-00282

EPA SAMPLE NO.

FORM 1A-OR
ORGANIC ANALYSIS DATA SHEET
TARGET ANALYTE LIST

Lab Name: _____ Contract: _____

Lab Code: _____ Case No.: _____ MA No.: _____ SDG No.: _____

Analytical Method: _____ Level: _____

Matrix: _____ Lab Sample ID: _____

Sample wt/vol: _____(g/mL) _____ Lab File ID: _____

% Solids: _____ Date Received: _____

GC Column: _____ ID: _____(mm) Date Extracted: _____

GC Column: _____ ID: _____(mm) Date Analyzed: _____

Extract Concentrated:(Y/N) _____ Extract Volume: _____(µL)

Soil Aliquot (VOA): _____(µL) Extraction Type: _____

Heated Purge: (Y/N) _____ Injection Volume: _____(µL)

Purge Volume: _____(mL) pH: _____ Dilution Factor: _____

Cleanup Types: _____ Cleanup Factor: _____

Concentration Units (µg/L, mg/L, µg/kg): _____

CAS NO.	ANALYTE	CONCENTRATION	Q

ED_004144A_00000101-00283

EPA SAMPLE NO.

FORM 1B-OR
ORGANIC ANALYSIS DATA SHEET
TENTATIVELY IDENTIFIED COMPOUNDS

Lab Name: _____ Contract: _____

Lab Code: _____ Case No.: _____ MA No.: _____ SDG No.: _____

Analytical Method: _____ Level: _____

Matrix: _____ Lab Sample ID: _____

Sample wt/vol: _____(g/mL) _____ Lab File ID: _____

% Solids: _____ Date Received: _____

GC Column: _____ ID: _____(mm) Date Extracted: _____

Extract Concentrated:(Y/N) _____ Date Analyzed: _____

Soil Aliquot (VOA): _____(µL) Extract Volume: _____(µL)

Heated Purge: (Y/N) _____ Extraction Type: _____

Purge Volume: _____(mL) Injection Volume: _____(µL)

Cleanup Types: _____ pH: _____ Dilution Factor: _____

Concentration Units (µg/L, µg/kg): _____ Cleanup Factor: _____

	CAS No.	ANALYTE	RT	EST. CONC.	Q
01					
02					
03					
04					
05					
06					
07					
08					
09					
10					
11					
12					
13					
14					
15					
16					
17					
18					
19					
20					
21					
22					
23					
24					
25					
26					
27					
28					
29					
30					
	E966796[1]	Total Alkanes	N/A		

[1]EPA-designated Registry Number.

ED_004144A_00000101-00284

FORM 2A-OR
DEUTERATED MONITORING COMPOUND RECOVERY

Lab Name: _____ Contract: _____

Lab Code: _____ Case No.: _____ MA No.: _____ SDG No.: _____

Analytical Method: _____ Level: _____

Matrix: _____

EPA SAMPLE NO.	DMC1	DMC2	DMC3	DMC4	DMC5	DMC6	DMC7	DMC8	DMC9

ED_004144A_00000101-00285

FORM 2B-OR
DEUTERATED MONITORING COMPOUND RECOVERY

Lab Name: _____ Contract: _____

Lab Code: _____ Case No.: _____ MA No.: _____ SDG No.: _____

Analytical Method: _____ Level: _____

Matrix: _____

EPA SAMPLE NO.	DMC10	DMC11	DMC12	DMC13	DMC14	DMC15	DMC16	DMC17	TOT OUT

ED_004144A_00000101-00286

FORM 2C-OR
SURROGATE RECOVERY

Lab Name: _____ Contract: _____

Lab Code: _____ Case No.: _____ MA No.: _____ SDG No.: _____

Analytical Method: _____

Matrix: _____

GC Column ( ): _____ ID: _____(mm) GC Column ( ): _____ ID: _____(mm)

EPA SAMPLE NO.	SUR 1-1 %R	SUR 1-2 %R	SUR 2-1 %R	SUR 2-2 %R	OTHER (1)	OTHER (2)	TOT OUT

ED_004144A_00000101-00287

FORM 3A-OR
MATRIX SPIKE/MATRIX SPIKE DUPLICATE RECOVERY

Lab Name: _____ Contract: _____

Lab Code: _____ Case No.: _____ MA No.: _____ SDG No.: _____

Analytical Method: _____ Level: _____

Matrix: _____

EPA Sample No. (Matrix Spike/Matrix Spike Duplicate): _____

Instrument ID: _____ GC Column: _____ ID: _____(mm)

Concentration Units (ug/L, mg/L, ug/kg): _____

ANALYTE	SPIKE ADDED	SAMPLE CONCENTRATION	MS CONCENTRATION	MS %R#	QC LIMITS %R

ANALYTE	SPIKE ADDED	MSD CONCENTRATION	MSD %R#	RPD	QC LIMITS	
					RPD	%R

ED_004144A_00000101-00288

EPA SAMPLE NO.

FORM 3B-OR
LABORATORY CONTROL
SAMPLE RECOVERY

Lab Name: _____ Contract: _____

Lab Code: _____ Case No.: _____ MA No.: _____ SDG No.: _____

Analytical Method: _____

Matrix: _____ Lab Sample ID: _____

LCS Lot No.: _____ Date Extracted: _____

Concentration Units (µg/L, mg/L, µg/Kg): _____

Instrument ID ( ): _____ GC Column ( ): _____ ID: _____(mm)

Date Analyzed ( ): _____

ANALYTE	AMOUNT ADDED	AMOUNT RECOVERED	%R	QC LIMITS

Instrument ID ( ): _____ GC Column ( ): _____ ID: _____(mm)

Date Analyzed ( ): _____

ANALYTE	AMOUNT ADDED	AMOUNT RECOVERED	%R	QC LIMITS

ED_004144A_00000101-00289

EPA SAMPLE NO.

FORM 4-OR
METHOD BLANK SUMMARY

Lab Name: _____ Contract: _____

Lab Code: _____ Case No.: _____ MA No.: _____ SDG No.: _____

Analytical Method: _____ Level: _____

Matrix: _____ Lab Sample ID: _____

Instrument ID: _____ Lab File ID: _____

Extraction Type: _____ Date Extracted: _____

GC Column ( ): _____ ID: _____(mm) Date Analyzed: _____

GC Column ( ): _____ ID: _____(mm) Time Analyzed: _____

Heated Purge: (Y/N) __ Cleanup (Y/N): __ Cleanup Types: _____

EPA SAMPLE NO.	LAB SAMPLE ID	LAB FILE ID	DATE/TIME ANALYZED

ED_004144A_00000101-00290

EPA SAMPLE NO.

Form 5-OR
GC/MS Instrument Performance Check

Lab Name: _____ Contract: _____

Lab Code: _____ Case No.: _____ MA No.: _____ SDG No.: _____

Analytical Method: _____ Lab File ID: _____

Instrument ID: _____ BFB/DFTPP _____

GC Column: _____ ID: _____(mm)

Injection Date: _____ Injection Time: _____

m/e	ION ABUNDANCE CRITERIA	% RELATIVE ABUNDANCE
		( )
		( )
		( )
		( )
		( )
		( )
		( )
		( )
		( )
		( )
		( )
		( )
		( )
		( )

EPA SAMPLE NO.	LAB SAMPLE ID	LAB FILE ID	DATE ANALYZED	TIME ANALYZED

ED_004144A_00000101-00291

FORM 6A-OR
GC/MS INITIAL CALIBRATION DATA

Lab Name: _____ Contract: _____

Lab Code: _____ Case No.: _____ MA No.: _____ SDG No.: _____

Analytical Method: _____ Level: _____

Instrument ID: _____ Calibration Date(s): _____ _____

GC Column: _____ ID: _____(mm) Calibration Time(s): _____ _____

Length: _____(m)

Heated Purge: (Y/N) _____ Purge Volume: _____(mL)

LAB FILE ID: _____ RRF ____ = _____ RRF ____ = _____

RRF _____ = _____ RRF ____ = _____ RRF ____ = _____

ANALYTE	RRF____	RRF____	RRF____	RRF____	RRF____	$\overline{RRF}$	%RSD

ED_004144A_00000101-00292

FORM 6B-OR

INITIAL CALIBRATION OF SINGLE COMPONENT ANALYTES

Lab Name: ______________________________ Contract: ______________________________

Lab Code: _________ Case No.: ________ MA No.: ____________ SDG No.: _________

Analytical Method: _____________________

Instrument ID: _______________________

Level (x CS1): CS1 ______ CS2 ________ CS3 _________ CS4 ________ CS5 ________

GC Column: __________ ID: ________(mm) Calibration Date(s): ________ _________

Calibration Time(s): ________ _________

ANALYTE	RT OF STANDARDS					$\overline{RT}$	RT WINDOW	
	CS1	CS2	CS3	CS4	CS5		FROM	TO

ED_004144A_00000101-00293

FORM 6C-OR
INITIAL CALIBRATION OF SINGLE COMPONENT ANALYTES

Lab Name: _____ Contract: _____

Lab Code: _____ Case No.: _____ MA No.: _____ SDG No.: _____

Analytical Method: _____

Instrument ID: _____

Level (x CS1): CS1 _____ CS2 _____ CS3 _____ CS4 _____ CS5 _____

GC Column: _____ ID: _____(mm) Calibration Date(s): _____ _____

Calibration Time(s): _____ _____

ANALYTE	CF OF STANDARDS					$\overline{CF}$	%RSD
	CS1	CS2	CS3	CS4	CS5		

ED_004144A_00000101-00294

FORM 6D-OR
INITIAL CALIBRATION OF MULTICOMPONENT ANALYTES

Lab Name: _____ Contract: _____

Lab Code: _____ Case No.: _____ MA No.: _____ SDG No.: _____

Analytical Method: _____

Instrument ID: _____

Level (x CS1): CS1 _____ CS2 _____ CS3 _____ CS4 _____ CS5 _____

GC Column: _____ ID: _____(mm) Calibration Date(s): _____ _____

Calibration Time(s): _____ _____

ANALYTE	PEAK	RT OF STANDARDS					$\overline{RT}$	RT WINDOW	
		CS1	CS2	CS3	CS4	CS5		FROM	TO
	1								
	2								
	3								
	4								
	5								
TCX									
DCB									
	1								
	2								
	3								
	4								
	5								
TCX									
DCB									
	1								
	2								
	3								
	4								
	5								
TCX									
DCB									

ED_004144A_00000101-00295

FORM 6E-OR
INITIAL CALIBRATION OF MULTICOMPONENT ANALYTES

Lab Name: _____ Contract: _____

Lab Code: _____ Case No.: _____ MA No.: _____ SDG No.: _____

Analytical Method: _____

Instrument ID: _____

Level (x CS1): CS1 _____ CS2 _____ CS3 _____ CS4 _____ CS5 _____

GC Column: _____ ID: _____(mm) Calibration Date(s): _____ _____

Calibration Time(s): _____ _____

ANALYTE	PEAK	CF OF STANDARDS						%RSD
		CS1	CS2	CS3	CS4	CS5	$\overline{CF}$	
	1							
	2							
	3							
	4							
	5							
TCX								
DCB								
	1							
	2							
	3							
	4							
	5							
TCX								
DCB								
	1							
	2							
	3							
	4							
	5							
TCX								
DCB								

ED_004144A_00000101-00296

FORM 6F-OR
INITIAL CALIBRATION (SINGLE POINT) OF MULTICOMPONENT ANALYTES

Lab Name: _____ Contract: _____

Lab Code: _____ Case No.: _____ MA No.: _____ SDG No.: _____

Analytical Method: _____

Instrument ID: _____

GC Column: _____ ID: _____(mm) Calibration Date(s): _____ _____

Calibration Time(s): _____ _____

ANALYTE	AMOUNT (ng)	PEAK	RT	RT WINDOW		CALIBRATION FACTOR
				FROM	TO	
		1				
		2				
		3				
		4				
		5				
		1				
		2				
		3				
		4				
		5				
		1				
		2				
		3				
		4				
		5				
		1				
		2				
		3				
		4				
		5				
		1				
		2				
		3				
		4				
		5				
		1				
		2				
		3				
		4				
		5				
		1				
		2				
		3				
		4				
		5				

ED_004144A_00000101-00297

FORM 6G-OR
RESOLUTION CHECK SUMMARY

Lab Name: _____ Contract: _____

Lab Code: _____ Case No.: _____ MA No.: _____ SDG No.: _____

Analytical Method: _____ Lab Sample ID ( ): _____

Instrument ID ( ): _____ EPA Sample No.: _____

GC Column ( ): _____ ID: _____(mm) Date Analyzed ( ): _____

Time Analyzed ( ): _____

ANALYTE	RT	RESOLUTION (%)

ED_004144A_00000101-00298

FORM 7A-OR
INITIAL CALIBRATION VERIFICATION AND CONTINUING CALIBRATION VERIFICATION FOR GC/MS

Lab Name: _____ Contract: _____

Lab Code: _____ Case No.: _____ MA No.: _____ SDG No.: _____

Analytical Method: _____ Level: _____

Instrument ID: _____ Date Analyzed: _____ Time: _____

Lab File ID: _____ Init. Calib Date(s): _____ _____

EPA Sample No.: _____ Init. Calib Time(s): _____ _____

GC Column: _____ ID: _____(mm) Length: _____(m)

Heated Purge: (Y/N) _____ Purge Volume: _____(mL)

ANALYTE	$\overline{RRF}$	RRF___	MIN RRF	%D	MAX %D

ED_004144A_00000101-00299

FORM 7B-OR
PESTICIDE PERFORMANCE EVALUATION MIXTURE CALIBRATION VERIFICATION SUMMARY

Lab Name: _____ Contract: _____

Lab Code: _____ Case No.: _____ MA No.: _____ SDG No.: _____

Instrument Blank EPA Sample No. (PIBLK##): _____

Instrument Blank Lab Sample ID: _____

EPA Sample No. (PEM##): _____ Init. Calib Date(s): _____ _____

Lab Sample ID (PEM): _____ Date Analyzed: _____

GC Column: _____ ID: _____(mm) Time Analyzed: _____

Date Analyzed: _____

Time Analyzed: _____

ANALYTE	RT	RT WINDOW		CALC AMOUNT (ng)	NOM AMOUNT (ng)	%D
		FROM	TO			
alpha-BHC						
beta-BHC						
gamma-BHC (Lindane)						
Endrin						
4,4'-DDT						
Methoxychlor						
TCX						
DCB						

4,4'-DDT %Breakdown ( ): _____ Endrin %Breakdown ( ): _____

Combined %Breakdown ( ): _____

ED_004144A_00000101-00300

FORM 7C-OR
CONTINUING CALIBRATION VERIFICATION SUMMARY

Lab Name: _____ Contract: _____

Lab Code: _____ Case No.: _____ MA No.: _____ SDG No.: _____

Analytical Method: _____ Init. Calib Date(s): _____ _____

Instrument Blank EPA Sample No.: _____ Date Analyzed: _____

Instrument Blank Lab ID: _____ Time Analyzed: _____

EPA Sample No.: _____ Date Analyzed: _____

Lab Sample ID: _____ Time Analyzed: _____

GC Column: _____ ID: _____(mm)

ANALYTE	RT	RT WINDOW		$\overline{CF}$	CF	%D
		FROM	TO			

ED_004144A_00000101-00301

FORM 7D-OR
MULTICOMPONENT CONTINUING CALIBRATION VERIFICATION SUMMARY

Lab Name: _____ Contract: _____

Lab Code: _____ Case No.: _____ MA No.: _____ SDG No.: _____

Analytical Method: _____ Init. Calib Date(s): _____ _____

Instrument Blank EPA Sample No.: _____ Date Analyzed: _____

Instrument Blank Lab ID: _____ Time Analyzed: _____

EPA Sample No.: _____ Date Analyzed: _____

Lab Sample ID: _____ Time Analyzed: _____

GC Column: _____ ID: _____(mm)

ANALYTE	PEAK	RETENTION	RT WINDOW		$\overline{CF}$	CF	%D
		RT	FROM	TO			
	1						
	2						
	3						
	4						
	5						
TCX							
DCB							
	1						
	2						
	3						
	4						
	5						
TCX							
DCB							
	1						
	2						
	3						
	4						
	5						
TCX							
DCB							
	1						
	2						
	3						
	4						
	5						
TCX							
DCB							
	1						
	2						
	3						
	4						
	5						
TCX							
DCB							

ED_004144A_00000101-00302

FORM 8A-OR
INTERNAL STANDARD AREA AND RETENTION TIME SUMMARY

Lab Name: _____ Contract: _____

Lab Code: _____ Case No.: _____ MA No.: _____ SDG No.: _____

Analytical Method: _____ Level: _____

EPA Sample No.: _____ Lab File ID (Standard): _____

Instrument ID: _____ Init. Calib. Date(s): _____ _____

GC Column: _____ ID: _____(mm) Date Analyzed: _____

Heated Purge: (Y/N) _____ Time Analyzed: _____

	IS AREA	RT	IS AREA	RT	IS AREA	RT
12 HOUR STD						
UPPER LIMIT						
LOWER LIMIT						
EPA SAMPLE NO.						

ED_004144A_00000101-00303

FORM 8B-OR
ANALYTICAL SEQUENCE

Lab Name: _____ Contract: _____

Lab Code: _____ Case No.: _____ MA No.: _____ SDG No.: _____

Analytical Method: _____ Init. Calib. Date(s): _____ _____

Instrument ID: _____ Init. Calib. Time(s): _____ _____

GC Column: _____ ID: _____(mm)

THE ANALYTICAL SEQUENCE OF BLANKS, SAMPLES, STANDARDS, MS/MSDs, and LCSs IS GIVEN BELOW:

SURROGATE MEAN RT FROM INITIAL CALIBRATION
SURROGATE 1 ( ): _____
SURROGATE 2 ( ): _____

EPA SAMPLE NO.	LAB FILE ID	DATE ANALYZED	TIME ANALYZED	SUR 1 RT#	SUR 2 RT#

Column used to flag RT values with an asterisk.

ED_004144A_00000101-00304

FORM 9A-OR
FLORISIL CARTRIDGE CHECK

Lab Name: _____ Contract: _____

Lab Code: _____ Case No.: _____ MA No.: _____ SDG No.: _____

Analytical Method: _____

Florisil Cartridge Lot Number: _____ Date Analyzed: _____

GC Column: _____ ID: _____(mm)

ANALYTE	SPIKE ADDED (ng)	SPIKE RECOVERED (ng)	%R#	QC LIMITS

Column to be used to flag recovery with an asterisk.

THIS CARTRIDGE LOT APPLIES TO THE FOLLOWING SAMPLES, BLANKS, LCSs, AND MS/MSDs:

EPA SAMPLE NO.	LAB SAMPLE ID	DATE ANALYZED 1	DATE ANALYZED 2

ED_004144A_00000101-00305

FORM 9B-OR
GPC CALIBRATION VERIFICATION

Lab Name: _____ Contract: _____

Lab Code: _____ Case No.: _____ MA No.: _____ SDG No.: _____

Analytical Method: _____

GPC Column: _____ Date Analyzed: _____

GC Column: _____ ID: _____(mm)

ANALYTE	SPIKE ADDED (ng)	SPIKE RECOVERED (ng)	%R#	QC LIMITS

Column to be used to flag recovery with an asterisk.

THIS GPC CALIBRATION VERIFICATION APPLIES TO THE FOLLOWING SAMPLES, BLANKS, LCSs, AND MS/MSDs:

EPA SAMPLE NO.	LAB SAMPLE ID	GPC CLEANUP DATE

ED_004144A_00000101-00306

EPA SAMPLE NO.

FORM 10A-OR
IDENTIFICATION SUMMARY
FOR SINGLE COMPONENT ANALYTES

Lab Name: _____ Contract: _____

Lab Code: _____ Case No.: _____ MA No.: _____ SDG No.: _____

Analytical Method: _____ Lab Sample ID: _____

Instrument ID ( ): _____ Date(s) Analyzed: _____ _____

Instrument ID ( ): _____

GC Column ( ): _____ ID: _____(mm) GC Column ( ): _____ ID: _____(mm)

Concentration Units (µg/L, mg/L, µg/kg): _____

ANALYTE	COL	RT	RT WINDOW		CONCENTRATION	%D
			FROM	TO		
	1					
	2					
	1					
	2					
	1					
	2					
	1					
	2					
	1					
	2					
	1					
	2					
	1					
	2					
	1					
	2					

ED_004144A_00000101-00307

EPA SAMPLE NO.

FORM 10B-OR
IDENTIFICATION SUMMARY
FOR MULTICOMPONENT ANALYTES

Lab Name: _____ Contract: _____

Lab Code: _____ Case No.: _____ MA No.: _____ SDG No.: _____

Analytical Method: _____ Lab Sample ID: _____

Instrument ID ( ): _____ Date(s) Analyzed: _____ _____

Instrument ID ( ): _____

GC Column ( ): _____ ID: _____(mm) GC Column ( ): _____ ID: _____(mm)

Concentration Units (µg/L, mg/L, µg/kg): _____

ANALYTE	PEAK	RT	RT WINDOW		CONCENTRATION		%D
			FROM	TO	PEAK	MEAN	
_____ COLUMN 1	1						
	2						
	3						
	4						
	5						
COLUMN 2	1						
	2						
	3						
	4						
	5						
_____ COLUMN 1	1						
	2						
	3						
	4						
	5						
COLUMN 2	1						
	2						
	3						
	4						
	5						
_____ COLUMN 1	1						
	2						
	3						
	4						
	5						
COLUMN 2	1						
	2						
	3						
	4						
	5						

ED_004144A_00000101-00308

FORM DC-1
SAMPLE LOG-IN SHEET

Lab Name		Page of
Received By (Print Name)		Log-in Date
Received By (Signature)		
Case Number	SDG No.	MA No.

Remarks:	
1. Custody Seal(s)	Present/Absent* Intact/Broken
2. Custody Seal Nos.	_____ _____
3. Traffic Reports/Chain of Custody Records or Packing Lists	Present/Absent*
4. Airbill	Airbill/Sticker Present/Absent*
5. Airbill No.	_____ _____
6. Sample Tags Sample Tag Numbers	Present/Absent* Listed/Not Listed on Traffic Report/Chain of Custody Record
7. Sample Condition	Intact/Broken*/ Leaking
8. Shipping Container Temperature Indicator Bottle	Present/Absent*
9. Shipping Container Temperature	_____
10. Does information on Traffic Reports/Chain of Custody Records and Sample Tags agree?	Yes/No*
11. Date Received at Lab	_____
12. Time Received	_____

	EPA Sample #	Corresponding		Remarks: Condition of Sample Shipment, etc.
		Sample Tag #	Assigned Lab #	
1				
2				
3				
4				
5				
6				
7				
8				
9				
10				
11				
12				
13				
14				
15				
16				
17				
18				
19				
20				
21				
22				

* Contact SMO and attach record of resolution

Reviewed By	Logbook No.
Date	Logbook Page No.

ED_004144A_00000101-00309

FORM DC-2
FULL ORGANICS COMPLETE SDG FILE (CSF) INVENTORY SHEET

LAB NAME _____

LAB CODE _____

CONTRACT NO. _____

CASE NO. _____ SDG NO. _____

MA NO. _____

SOW NO. _____

All documents delivered in the Complete SDG File must be original documents where possible. (Reference - Exhibit B Section 2.4)

		PAGE NOs.		CHECK	
		FROM	TO	LAB	REGION
1.	SDG Cover Page				
2.	Traffic Report/Chain of Custody Record(s)				
3.	Sample Log-In Sheet (DC-1)				
4.	CSF Inventory Sheet (DC-2)				
5.	SDG Narrative				
Organic Analysis					
Trace Volatiles					
	Quality Control Summary				
6.	Deuterated Monitoring Compound Recovery (Form 2A-OR and Form 2B-OR)				
7.	Matrix Spike/Matrix Spike Duplicate Recovery (Form 3A-OR) (if requested by the EPA Region)				
8.	Method Blank Summary (Form 4-OR)				
9.	GC/MS Instrument Performance Check (Form 5-OR)				
10.	Internal Standard Area and Retention Summary (Form 8A-OR)				
	Sample Data				
11.	TAL Results - Organic Analysis Data Sheet (Form 1A-OR)				
12.	Tentatively Identified Compounds (Form 1B-OR)				
13.	Raw Data for Each Sample:				
	Reconstructed total ion chromatograms (RICs) for each sample				
	Raw Spectra and background-subtracted mass spectra of target analytes identified				
	Quantitation Reports				

ED_004144A_00000101-00310

FORM DC-2
ORGANICS COMPLETE SDG FILE (CSF) INVENTORY SHEET

		PAGE NOs.		CHECK	
		FROM	TO	LAB	REGION
	Mass Spectra of all reported TICs with three best library matches				
	Standards Data (All Instruments)				
14.	GC/MS Initial Calibration Data (Form 6A-OR)				
15.	RICs and Quantitation Reports for all Standards				
16.	Initial Calibration Verification and Continuing Calibration Verification for GC/MS (Form 7A-OR)				
17.	RICs and Quantitation Reports for all Standards				
	Quality Control Data				
18.	Performance Check				
19.	Blank Data				
20.	Matrix Spike/Matrix Spike Duplicate Data (Form 3A-OR) (if requested by the EPA Region)				
21.	Original preparation and analysis forms or copies of preparation and analysis logbook pages (including screening records if applicable)				
Low-Medium Volatiles					
	Quality Control Summary				
22.	Deuterated Monitoring Compound Recovery (Form 2A-OR and Form 2B-OR)				
23.	Matrix Spike/Matrix Spike Duplicate Recovery (Form 3A-OR) (if requested by the EPA Region)				
24.	Method Blank Summary (Form 4-OR)				
25.	GC/MS Instrument Performance Check (Form 5-OR)				
26.	Internal Standard Area and Retention Time Summary (Form 8A-OR)				
	Sample Data				
27.	TAL Results - Organic Analysis Data Sheet (Form 1A-OR)				
28.	Tentatively Identified Compounds (Form 1B-OR)				
29.	Raw Data for Each Sample:				
	Reconstructed total ion chromatograms (RICs) for each sample				
	Raw Spectra and background-subtracted mass spectra of target analytes identified				
	Quantitation Reports				

ED_004144A_00000101-00311

FORM DC-2
ORGANICS COMPLETE SDG FILE (CSF) INVENTORY SHEET

		PAGE NOs.		CHECK	
		FROM	TO	LAB	REGION
	Mass Spectra of all reported TICs with three best library matches				
	Standards Data (All Instruments)				
30.	GC/MS Initial Calibration Data (Form 6A-OR)				
31.	RICs and Quantitation Reports for all Standards				
32.	Initial Calibration Verification and Continuing Calibration Verification for GC/MS (Form 7A-OR)				
33.	RICs and Quantitation Reports for all Standards				
	Quality Control Data				
34.	Performance Check				
35.	Blank Data				
36.	Matrix Spike/Matrix Spike Duplicate Data (if requested by the EPA Region)				
37.	Original preparation and analysis forms or copies of preparation and analysis logbook pages (including TCLP/SPLP logs, Percent Solid Determinations logs, and screening records if applicable)				
Semivolatiles					
	Quality Control Summary				
38.	Deuterated Monitoring Compound Recovery (Form 2A-OR and Form 2B-OR)				
39.	Matrix Spike/Matrix Spike Duplicate Recovery (Form 3A-OR) (if requested by the EPA Region)				
40.	Method Blank Summary (Form 4-OR)				
41.	GC/MS Instrument Performance Check (Form 5-OR)				
42.	Internal Standard Area and Retention Time Summary (Form 8A-OR)				
	Sample Data				
43.	TAL Results - Organic Analysis Data Sheet (Form 1A-OR)				
44.	Tentatively Identified Compounds (Form 1B-OR)				
45.	Raw Data for Each Sample:				
	Reconstructed total ion chromatograms (RICs) for each sample				
	Raw Spectra and background-subtracted mass spectra of target analytes identified				
	Quantitation Reports				

ED_004144A_00000101-00312

FORM DC-2
ORGANICS COMPLETE SDG FILE (CSF) INVENTORY SHEET

		PAGE NOs.		CHECK	
		FROM	TO	LAB	REGION
	Mass Spectra of all reported TICs with three best library matches				
	GPC chromatograms (if GPC is required)				
	Standards Data (All Instruments)				
46.	GC/MS Initial Calibration Data (Form 6A-OR)				
47.	RICs and Quantitation Reports for all Standards				
48.	Initial Calibration Verification and Continuing Calibration Verification for GC/MS (Form 7A-OR)				
49.	RICs and Quantitation Reports for all Standards				
	Quality Control Data				
50.	Performance Check				
51.	Blank Data				
52.	Matrix Spike/Matrix Spike Duplicate Data (if requested by the EPA Region)				
53.	Raw GPC Data				
54.	For SIM analysis (if requested), at the same sequence as listed above, except for that Form 1B-OR and TIC spectra data which are not required for SIM method.				
55.	Original preparation and analysis forms or copies of preparation and analysis logbook pages (including TCLP/SPLP logs, Percent Solid Determinations logs, and screening records if applicable)				
Pesticides					
	Quality Control Summary				
56.	Surrogate Recovery (Form 2C-OR)				
57.	Matrix Spike/Matrix Spike Duplicate Recovery (Form 3A-OR each columns)				
58.	Laboratory Control Sample Recovery (Form 3B-OR for each column)				
59.	Method Blank Summary (Form 4-OR)				
	Sample Data				
60.	TAL Results - Organic Analysis Data Sheet (Form 1A-OR)				
61.	Raw Data for Each Sample:				
	Chromatograms (Primary Column)				
	Chromatograms (Secondary Column)				
	Quantitation Reports				
	Manual Worksheets				

ED_004144A_00000101-00313

FORM DC-2
ORGANICS COMPLETE SDG FILE (CSF) INVENTORY SHEET

		PAGE NOs.		CHECK	
		FROM	TO	LAB	REGION
62.	For Pesticides by GC/MS Confirmation:				
	Copies of raw spectra and copies of background-subtracted mass spectra of target analytes (samples & standards)				
	Standards Data				
63.	Initial Calibration of Single Component Analytes (Form 6B-OR and 6C-OR)				
64.	Initial Calibration of Multicomponent Analytes (Form 6D-OR and 6E-OR)				
65.	Analyte Resolution Summary (Form 6G-OR)				
66.	Pesticide Performance Evaluation Mixture Calibration Verification Summary (Form 7B-OR)				
67.	Continuing Calibration Verification Summary (Form 7C-OR)				
68.	Multicomponent Continuing Calibration Verification Summary (Form 7D-OR)				
69.	Analytical Sequence (Form 8B-OR)				
70.	Florisil Cartridge Check (Form 9A-OR)				
71.	GPC Calibration Verification (Form 9B-OR)				
72.	Identification Summary for Single Component Analytes (Form 10A-OR)				
73.	Identification Summary for Multicomponent Analytes (Form 10B-OR)				
74.	Chromatograms and Quantitation Reports:				
	A printout of Retention Times and corresponding peak areas or peak heights				
	Quality Control Data				
75.	Blank Data				
76.	Matrix Spike/Matrix Spike Duplicate Data				
77.	Laboratory Control Sample				
78.	Raw GPC Data				
79.	Raw Florisil Data				
80.	Original preparation and analysis forms or copies of preparation and analysis logbook pages (including TCLP/SPLP logs, Percent Solid Determinations logs, and screening records if applicable)				
Aroclors					
	Quality Control Summary				
81.	Surrogate Recovery (Form 2C-OR)				
82.	Matrix Spike/Matrix Spike Duplicate Summary (Form 3A-OR)				

ED_004144A_00000101-00314

FORM DC-2
ORGANICS COMPLETE SDG FILE (CSF) INVENTORY SHEET

	PAGE NOs.		CHECK	
	FROM	TO	LAB	REGION
83. Laboratory Control Sample Recovery (Form 3B-OR for each column)				
84. Method Blank Summary (Form 4-OR)				
Sample Data				
85. TAL Results - Organic Analysis Data Sheet (Form 1A-OR)				
86. Raw Data for Each Sample:				
Chromatograms (Primary Column)				
Chromatograms (Secondary Column)				
Quantitation Reports				
Manual Worksheets				
87. For Aroclors by GC/MS Confirmation:				
Copies of raw spectra and copies of background-subtracted mass spectra of target analytes (samples & standards)				
Standards Data				
88. Initial Calibration of Multicomponent Analytes (Form 6D-OR, Form 6E-OR, and Form 6F-OR)				
89. Multicomponent Continuing Calibration Verification Summary (Form 7D-OR)				
90. Analytical Sequence (Form 8B-OR)				
91. Identification Summary for Multicomponent Analytes (Form 10B-OR)				
92. Chromatograms and data system printouts:				
A printout of Retention Times and corresponding peak areas or peak heights				
Quality Control Data				
93. Blank Data				
94. Matrix Spike/Matrix Spike Duplicate Data				
95. Laboratory Control Sample (LCS) Data				
96. Raw GPC Data (if performed)				
97. Original preparation and analysis forms or copies of preparation and analysis logbook pages (including Percent Solid Determinations logs and screening records if applicable)				
Additional				
98. EPA Shipping/Receiving Documents				
Airbill (No. of Shipments_____)				
Sample Tags				
Sample Log-In Sheet (Lab)				

ED_004144A_00000101-00315

FORM DC-2
ORGANICS COMPLETE SDG FILE (CSF) INVENTORY SHEET

	PAGE NOs.		CHECK	
	FROM	TO	LAB	REGION
99. Misc. Shipping/Receiving Records (list all individual records)				
Communication Logs				
100. Internal Lab Sample Transfer Records & Tracking Sheets (describe or list)				
101. PE/PT Instruction Forms				
102. Other Records (describe or list)				
Communication Logs				
103. Comments:				

Completed by:
(CLP Lab) _____ _____ _____
(Signature) (Print Name & Title) (Date)

Audited by:
(EPA) _____ _____ _____
(Signature) (Print Name & Title) (Date)

ED_004144A_00000101-00316

THIS PAGE INTENTIONALLY LEFT BLANK

ED_004144A_00000101-00317

EXHIBIT C

ORGANIC TARGET ANALYTE LIST AND
CONTRACT REQUIRED QUANTITATION LIMITS

NOTE: The Contract Required Quantitation Limit (CRQL) values listed on the following pages are based on the analysis of samples according to the specifications given in Exhibit D.

Changes to the CRQL may be requested under the Modified Analysis (MA) clause in the contract.

ED_004144A_00000101-00318

THIS PAGE INTENTIONALLY LEFT BLANK

ED_004144A_00000101-00319

Exhibit C - Organic Target Analyte List and Contract Required Quantitation Limits

Table of Contents

Section		Page
1.0	TRACE VOLATILES TARGET ANALYTE LIST AND CONTRACT REQUIRED QUANTITATION LIMITS	5
2.0	LOW/MEDIUM VOLATILES TARGET ANALYTE LIST AND CONTRACT REQUIRED QUANTITATION LIMITS	6
3.0	SEMIVOLATILES TARGET ANALYTE LIST AND CONTRACT REQUIRED QUANTITATION LIMITS	8
4.0	PESTICIDES TARGET ANALYTE LIST AND CONTRACT REQUIRED QUANTITATION LIMITS	10
5.0	AROCLORS TARGET ANALYTE LIST AND CONTRACT REQUIRED QUANTITATION LIMITS	10

ED_004144A_00000101-00320

THIS PAGE INTENTIONALLY LEFT BLANK

ED_004144A_00000101-00321

1.0 TRACE VOLATILES TARGET ANALYTE LIST AND CONTRACT REQUIRED QUANTITATION LIMITS

TABLE 1. TRACE VOLATILES TARGET ANALYTE LIST AND CONTRACT REQUIRED QUANTITATION LIMITS[A]

Analyte Name	CAS Number	CRQLs Trace Water (µg/L)
Dichlorodifluoromethane	75-71-8	0.50
Chloromethane	74-87-3	0.50
Vinyl chloride	75-01-4	0.50
Bromomethane	74-83-9	0.50
Chloroethane	75-00-3	0.50
Trichlorofluoromethane	75-69-4	0.50
1,1-Dichloroethene	75-35-4	0.50
1,1,2-Trichloro-1,2,2-trifluoroethane	76-13-1	0.50
Acetone	67-64-1	5.0
Carbon disulfide	75-15-0	0.50
Methyl acetate	79-20-9	0.50
Methylene chloride	75-09-2	0.50
trans-1,2-Dichloroethene	156-60-5	0.50
Methyl tert-butyl ether	1634-04-4	0.50
1,1-Dichloroethane	75-34-3	0.50
cis-1,2-Dichloroethene	156-59-2	0.50
2-Butanone	78-93-3	5.0
Bromochloromethane	74-97-5	0.50
Chloroform	67-66-3	0.50
1,1,1-Trichloroethane	71-55-6	0.50
Cyclohexane	110-82-7	0.50
Carbon tetrachloride	56-23-5	0.50
Benzene	71-43-2	0.50
1,2-Dichloroethane	107-06-2	0.50
Trichloroethene	79-01-6	0.50
Methylcyclohexane	108-87-2	0.50
1,2-Dichloropropane	78-87-5	0.50
Bromodichloromethane	75-27-4	0.50
cis-1,3-Dichloropropene	10061-01-5	0.50
4-Methyl-2-pentanone	108-10-1	5.0
Toluene	108-88-3	0.50
trans-1,3-Dichloropropene	10061-02-6	0.50
1,1,2-Trichloroethane	79-00-5	0.50
Tetrachloroethene	127-18-4	0.50

ED_004144A_00000101-00322

TABLE 1. TRACE VOLATILES TARGET ANALYTE LIST AND CONTRACT REQUIRED QUANTITATION LIMITS[A] (CON'T)

Analyte Name	CAS Number	CRQLs Trace Water (µg/L)
2-Hexanone	591-78-6	5.0
Dibromochloromethane	124-48-1	0.50
1,2-Dibromoethane	106-93-4	0.50
Chlorobenzene	108-90-7	0.50
Ethylbenzene	100-41-4	0.50
o-Xylene	95-47-6	0.50
m,p-Xylene	179601-23-1	0.50
Styrene	100-42-5	0.50
Bromoform	75-25-2	0.50
Isopropylbenzene	98-82-8	0.50
1,1,2,2-Tetrachloroethane	79-34-5	0.50
1,3-Dichlorobenzene	541-73-1	0.50
1,4-Dichlorobenzene	106-46-7	0.50
1,2-Dichlorobenzene	95-50-1	0.50
1,2-Dibromo-3-chloropropane	96-12-8	0.50
1,2,4-Trichlorobenzene	120-82-1	0.50
1,2,3-Trichlorobenzene	87-61-6	0.50

2.0 LOW/MEDIUM VOLATILES TARGET ANALYTE LIST AND CONTRACT REQUIRED QUANTITATION LIMITS

TABLE 2. LOW/MEDIUM VOLATILES TARGET ANALYTE LIST AND CONTRACT REQUIRED QUANTITATION LIMITS[A]

Analyte Name	CAS Number	CRQLs Low Water[I] (µg/L)	CRQLs Low Soil[B] (µg/kg)	CRQLs Medium Soil[B] (µg/kg)
Dichlorodifluoromethane	75-71-8	5.0	5.0	250
Chloromethane	74-87-3	5.0	5.0	250
Vinyl chloride[C]	75-01-4	5.0	5.0	250
Bromomethane	74-83-9	5.0	5.0	250
Chloroethane	75-00-3	5.0	5.0	250
Trichlorofluoromethane	75-69-4	5.0	5.0	250
1,1-Dichloroethene[C]	75-35-4	5.0	5.0	250
1,1,2-Trichloro-1,2,2-trifluoroethane	76-13-1	5.0	5.0	250
Acetone	67-64-1	10	10	500
Carbon disulfide	75-15-0	5.0	5.0	250
Methyl acetate	79-20-9	5.0	5.0	250
Methylene chloride	75-09-2	5.0	5.0	250
trans-1,2-Dichloroethene	156-60-5	5.0	5.0	250
Methyl tert-butyl ether	1634-04-4	5.0	5.0	250
1,1-Dichloroethane	75-34-3	5.0	5.0	250

ED_004144A_00000101-00323

TABLE 2. LOW/MEDIUM VOLATILES TARGET ANALYTE LIST AND CONTRACT REQUIRED QUANTITATION LIMITS[A] (CON'T)

Analyte Name	CAS Number	CRQLs		
		Low Water[I] (µg/L)	Low Soil[B] (µg/kg)	Medium Soil[B] (µg/kg)
cis-1,2-Dichloroethene	156-59-2	5.0	5.0	250
2-Butanone[C]	78-93-3	10	10	500
Bromochloromethane	74-97-5	5.0	5.0	250
Chloroform[C]	67-66-3	5.0	5.0	250
1,1,1-Trichloroethane	71-55-6	5.0	5.0	250
Cyclohexane	110-82-7	5.0	5.0	250
Carbon tetrachloride[C]	56-23-5	5.0	5.0	250
Benzene[C]	71-43-2	5.0	5.0	250
1,2-Dichloroethane[C]	107-06-2	5.0	5.0	250
Trichloroethene[C]	79-01-6	5.0	5.0	250
Methylcyclohexane	108-87-2	5.0	5.0	250
1,2-Dichloropropane	78-87-5	5.0	5.0	250
Bromodichloromethane	75-27-4	5.0	5.0	250
cis-1,3-Dichloropropene	10061-01-5	5.0	5.0	250
4-Methyl-2-pentanone	108-10-1	10	10	500
Toluene	108-88-3	5.0	5.0	250
trans-1,3-Dichloropropene	10061-02-6	5.0	5.0	250
1,1,2-Trichloroethane	79-00-5	5.0	5.0	250
Tetrachloroethene[C]	127-18-4	5.0	5.0	250
2-Hexanone	591-78-6	10	10	500
Dibromochloromethane	124-48-1	5.0	5.0	250
1,2-Dibromoethane	106-93-4	5.0	5.0	250
Chlorobenzene[C]	108-90-7	5.0	5.0	250
Ethylbenzene	100-41-4	5.0	5.0	250
o-Xylene	95-47-6	5.0	5.0	250
m,p-Xylene	179601-23-1	5.0	5.0	250
Styrene	100-42-5	5.0	5.0	250
Bromoform	75-25-2	5.0	5.0	250
Isopropylbenzene	98-82-8	5.0	5.0	250
1,1,2,2-Tetrachloroethane	79-34-5	5.0	5.0	250
1,3-Dichlorobenzene	541-73-1	5.0	5.0	250
1,4-Dichlorobenzene[C]	106-46-7	5.0	5.0	250
1,2-Dichlorobenzene	95-50-1	5.0	5.0	250
1,2-Dibromo-3-chloropropane	96-12-8	5.0	5.0	250
1,2,4-Trichlorobenzene	120-82-1	5.0	5.0	250
1,2,3-Trichlorobenzene	87-61-6	5.0	5.0	250

ED_004144A_00000101-00324

3.0 SEMIVOLATILES TARGET ANALYTE LIST AND CONTRACT REQUIRED QUANTITATION LIMITS

TABLE 3. SEMIVOLATILES TARGET ANALYTE LIST AND CONTRACT REQUIRED QUANTITATION LIMITS[A]

Analyte Name	CAS Number	CRQLs Low Water By SIM[D] (µg/L)	CRQLs Low Water[I] (µg/L)	CRQLs Low Soil By SIM[B,D] (µg/kg)	CRQLs Low Soil[B] (µg/kg)	CRQLs Med. Soil[B] (µg/kg)
1,4-Dioxane	123-91-1		2.0		67	2000
Benzaldehyde	100-52-7		10		330	10000
Phenol	108-95-2		10		330	10000
Bis(2-chloroethyl) ether	111-44-4		10		330	10000
2-Chlorophenol	95-57-8		5.0		170	5000
2-Methylphenol[C]	95-48-7		10		330	10000
3-Methylphenol[C,K]	108-39-4		5.0			
2,2'-Oxybis(1-chloropropane)[E]	108-60-1		10		330	10000
Acetophenone	98-86-2		10		330	10000
4-Methylphenol[A,C]	106-44-5		10		330	10000
N-Nitroso-di-n propylamine	621-64-7		5.0		170	5000
Hexachloroethane[C]	67-72-1		5.0		170	5000
Nitrobenzene[C]	98-95-3		5.0		170	5000
Isophorone	78-59-1		5.0		170	5000
2-Nitrophenol	88-75-5		5.0		170	5000
2,4-Dimethylphenol	105-67-9		5.0		170	5000
Bis(2-chloroethoxy)methane	111-91-1		5.0		170	5000
2,4-Dichlorophenol	120-83-2		5.0		170	5000
Naphthalene[F]	91-20-3	0.10	5.0	3.3	170	5000
4-Chloroaniline	106-47-8		10		330	10000
Hexachlorobutadiene[C]	87-68-3		5.0		170	5000
Caprolactam	105-60-2		10		330	10000
4-Chloro-3-methylphenol	59-50-7		5.0		170	5000
2-Methylnaphthalene[F]	91-57-6	0.10	5.0	3.3	170	5000
Hexachlorocyclo-pentadiene	77-47-4		10		330	10000
2,4,6-Trichlorophenol[C]	88-06-2		5.0		170	5000
2,4,5-Trichlorophenol[C]	95-95-4		5.0		170	5000
1,1'-Biphenyl	92-52-4		5.0		170	5000
2-Chloronaphthalene	91-58-7		5.0		170	5000
2-Nitroaniline	88-74-4		5.0		170	5000
Dimethylphthalate	131-11-3		5.0		170	5000
2,6-Dinitrotoluene	606-20-2		5.0		170	5000
Acenaphthylene[F]	208-96-8	0.10	5.0	3.3	170	5000
3-Nitroaniline	99-09-2		10		330	10000
Acenaphthene[F]	83-32-9	0.10	5.0	3.3	170	5000
2,4-Dinitrophenol	51-28-5		10		330	10000
4-Nitrophenol	100-02-7		10		330	10000
Dibenzofuran	132-64-9		5.0		170	5000
2,4-Dinitrotoluene[C]	121-14-2		5.0		170	5000
Diethylphthalate	84-66-2		5.0		170	5000

ED_004144A_00000101-00325

TABLE 3. SEMIVOLATILES TARGET ANALYTE LIST AND CONTRACT REQUIRED QUANTITATION LIMITS[A] (CON'T)

Analyte Name	CAS Number	CRQLs				
		Low Water By SIM[D] (µg/L)	Low Water[I] (µg/L)	Low Soil By SIM[B,D] (µg/kg)	Low Soil[B] (µg/kg)	Med. Soil[B] (µg/kg)
Fluorene[F]	86-73-7	0.10	5.0	3.3	170	5000
4-Chlorophenyl-phenyl ether	7005-72-3		5.0		170	5000
4-Nitroaniline	100-01-6		10		330	10000
4,6-Dinitro-2-methylphenol	534-52-1		10		330	10000
N-Nitrosodiphenylamine	86-30-6		5.0		170	5000
1,2,4,5-Tetrachlorobenzene	95-94-3		5.0		170	5000
4-Bromophenyl-phenylether	101-55-3		5.0		170	5000
Hexachlorobenzene[C]	118-74-1		5.0		170	5000
Atrazine	1912-24-9		10		330	10000
Pentachlorophenol[C,F]	87-86-5	0.20	10	6.7	330	10000
Phenanthrene[C,F]	85-01-8	0.10	5.0	3.3	170	5000
Anthracene[F]	120-12-7	0.10	5.0	3.3	170	5000
Carbazole	86-74-8		10		330	10000
Di-n-butylphthalate	84-74-2		5.0		170	5000
Fluoranthene[F]	206-44-0	0.10	10	3.3	330	10000
Pyrene[F]	129-00-0	0.10	5.0	3.3	170	5000
Butylbenzylphthalate	85-68-7		5.0		170	5000
3,3'-Dichlorobenzidine	91-94-1		10		330	10000
Benzo(a)anthracene[F]	56-55-3	0.10	5.0	3.3	170	5000
Chrysene[F]	218-01-9	0.10	5.0	3.3	170	5000
Bis(2-ethylhexyl)phthalate	117-81-7		5.0		170	5000
Di-n-octylphthalate	117-84-0		10		330	10000
Benzo(b)fluoranthene[F]	205-99-2	0.10	5.0	3.3	170	5000
Benzo(k)fluoranthene[F]	207-08-9	0.10	5.0	3.3	170	5000
Benzo(a)pyrene[F]	50-32-8	0.10	5.0	3.3	170	5000
Indeno(1,2,3-cd)pyrene[F]	193-39-5	0.10	5.0	3.3	170	5000
Dibenzo(a,h)anthracene[F]	53-70-3	0.10	5.0	3.3	170	5000
Benzo(g,h,i)perylene[F]	191-24-2	0.10	5.0	3.3	170	5000
2,3,4,6-Tetrachlorophenol	58-90-2		5.0		170	5000

ED_004144A_00000101-00326

4.0 PESTICIDES TARGET ANALYTE LIST AND CONTRACT REQUIRED QUANTITATION LIMITS

TABLE 4. PESTICIDES TARGET ANALYTE LIST AND CONTRACT REQUIRED QUANTITATION LIMITS[A,G]

Analyte Name	CAS Number	CRQLs	
		Water (µg/L)	Soil[B] (µg/kg)
alpha-BHC	319-84-6	0.050	1.7
beta-BHC	319-85-7	0.050	1.7
delta-BHC	319-86-8	0.050	1.7
gamma-BHC (Lindane)[C]	58-89-9	0.050	1.7
Heptachlor[C]	76-44-8	0.050	1.7
Aldrin	309-00-2	0.050	1.7
Heptachlor epoxide[C,H]	1024-57-3	0.050	1.7
Endosulfan I	959-98-8	0.050	1.7
Dieldrin	60-57-1	0.10	3.3
4,4'-DDE	72-55-9	0.10	3.3
Endrin[C]	72-20-8	0.10	3.3
Endosulfan II	33213-65-9	0.10	3.3
4,4'-DDD	72-54-8	0.10	3.3
Endosulfan sulfate	1031-07-8	0.10	3.3
4,4'-DDT	50-29-3	0.10	3.3
Methoxychlor[C]	72-43-5	0.50	17
Endrin ketone	53494-70-5	0.10	3.3
Endrin aldehyde	7421-93-4	0.10	3.3
cis-Chlordane[C,J]	5103-71-9	0.050	1.7
trans-Chlordane[C,J]	5103-74-2	0.050	1.7
Toxaphene[C]	8001-35-2	5.0	170

5.0 AROCLORS TARGET ANALYTE LIST AND CONTRACT REQUIRED QUANTITATION LIMITS

TABLE 5. AROCLORS TARGET ANALYTE LIST AND CONTRACT REQUIRED QUANTITATION LIMITS[G]

Analyte Name	CAS Number	CRQLs	
		Water (µg/L)	Soil[B] (µg/kg)
Aroclor-1016	12674-11-2	1.0	33
Aroclor-1221	11104-28-2	1.0	33
Aroclor-1232	11141-16-5	1.0	33
Aroclor-1242	53469-21-9	1.0	33
Aroclor-1248	12672-29-6	1.0	33
Aroclor-1254	11097-69-1	1.0	33
Aroclor-1260	11096-82-5	1.0	33
Aroclor-1262	37324-23-5	1.0	33
Aroclor-1268	11100-14-4	1.0	33

ED_004144A_00000101-00327

Endnotes:

A. Changes to the Organic Target Analyte List (TAL) (e.g., adding an additional analyte) may be requested under the Modified Analysis clause in the contract.

B. The CRQLs for soil/sediment are based on 100% solids and on the minimum weights and volumes specified in Exhibit D. The moisture content of the samples must be used to adjust the CRQL values appropriately.

C. Toxicity Characteristic Leaching Procedure (TCLP) analyte list. The CRQLs for the TCLP analytes are the "Low Water" CRQLs (Low/Medium Volatiles and Semivolatiles) and the "Water" CRQLs (Pesticides) divided by 1000 in units of mg/L.

D. CRQL for analysis of water and soil samples using SIM technique for PAHs and phenols.

E. Previously known as Bis(2-chloroisopropyl) ether.

F. Target Analyte List for PAHs and Pentachlorophenol analyses request.

G. There is no differentiation between the preparation of low and medium soil samples in this method for analysis.

H. Only the exo_epoxy isomer.

I. Use the water CRQLs for Synthetic Precipitation Leaching Procedures (SPLP).

J. Formerly known as alpha-Chlordane and gamma-Chlordane respectively.

K. Semivolatile target analyte 3-methylphenol is included in this table ONLY for inclusion in the list of TCLP and/or SPLP analytes. Compounds 3-Methylphenol and 4-Methylphenol cannot be separated by the extraction techniques or GC columns used in this method. Therefore, both are represented in this SOW by the 4-methylphenol isomer only. Those data users who wish to analyze 3- and 4-methylphenol separately are encouraged to utilize the CLP-MA process to obtain data for these compounds from the derivatization/GC method (8041A or equivalent).

ED_004144A_00000101-00328

THIS PAGE INTENTIONALLY LEFT BLANK

ED_004144A_00000101-00329

Appendix C

Standard Operating Procedures

Standard Operating Procedure No. 001
for
Sample Labels

Prepared by

EA Engineering, Science, and Technology, Inc., PBC
225 Schilling Circle, Suite 400
Hunt Valley, Maryland 21031

Revision 0
December 2014

This page intentionally left blank

CONTENTS

Page

1. SCOPE AND APPLICATION 1

2. MATERIALS 1

3. PROCEDURE 1

   3.1 Label Information 1
   3.2 Routine Check 2
   3.3 Record Information 2

      3.3.1 Logbook Entry 2

   3.4 Shipment 3

4. MAINTENANCE 3

5. PRECAUTIONS 3

   5.1 Incidental Odors 3
   5.2 Duplicate Sample 3

6. REFERENCES 3

ED_004144A_00000101-00333

This page intentionally left blank

ED_004144A_00000101-00334

1. SCOPE AND APPLICATION

The purpose of this Standard Operating Procedure is to delineate protocols for the use of sample labels. Every sample will have a sample label uniquely identifying the sampling point and analysis parameters. An example label is provided below. Other formats with similar levels of detail are acceptable.

PROJECT NAME _____ PROJECT NUM. _____
SAMPLE LOCATION/SITE ID _____
DATE: ____/____/____ TIME: _____:_____
ANALYTES: METALS VOC EXPLOSIVES ORGANICS OTHER
FILTERED: [NO] [YES]
PRESERVATIVE: [NONE] [HNO_3] [OTHER _____]
SAMPLER: _____

2. MATERIALS

The following materials may be required: sample label and indelible laboratory marker.

3. PROCEDURE

The following sections describe how to use the sample labeling system.

3.1 LABEL INFORMATION

As each sample is collected/selected, fill out a sample label. Enter the following information on each label:

- Project name
- Project number
- Location/site identification—Enter the media type (i.e., well number, surface water, soil, etc.) sampling number, and other pertinent information concerning where the sample was taken
- Date of sample collection

ED_004144A_00000101-00335

- Time of sample collection
- Analyses to be performed (NOTE: Due to number of analytes, details of analysis should be arranged with laboratory *prior to start of work)*
- Whether filtered or unfiltered (water samples only)
- Preservatives (water samples only)
- Number of containers for the sample (e.g., 1 of 2, 2 of 2).

3.2 ROUTINE CHECK

Double-check the label information to make sure it is correct. Detach the label, remove the backing, and apply the label to the sample container. Cover the label with clear tape, ensuring that the tape completely encircles the container.

3.3 RECORD INFORMATION

Record the sample number and designated sampling point in the field logbook, along with the following sample information:

- Time of sample collection (each logbook page should be dated)
- Location of the sample
- Organic vapor meter or photoionization meter readings for the sample (when appropriate)
- Any unusual or pertinent observations (oily sheen on groundwater sample, incidental odors, soil color, grain size, plasticity, etc.)
- Number of containers required for each sample
- Whether the sample is a quality assurance sample (split, duplicate, or blank).

3.3.1 Logbook Entry

A typical logbook entry might look like this:

- 7:35 a.m. Sample No. MW-3. PID = 35 ppm
- Petroleum odor present. Sample designated MW-3-001.

ED_004144A_00000101-00336

NOTE: Duplicate samples will be given a unique sample designation rather than the actual sample number with an added prefix or suffix. This will prevent any indication to the laboratory that this is a duplicate sample. This fictitious sample number will be listed in the logbook along with the actual location of the sample.

3.4 SHIPMENT

Place the sample upright in the designated sample cooler. Make sure there is plenty of ice in the cooler at all times.

4. MAINTENANCE

Not applicable.

5. PRECAUTIONS

5.1 INCIDENTAL ODORS

Note that although incidental odors should be noted in the logbook, it is unwise from a safety and health standpoint to routinely "sniff test" samples for contaminants.

5.2 DUPLICATE SAMPLE

No indication of which samples are duplicates is to be provided to the laboratory.

6. REFERENCES

U.S. Environmental Protection Agency. 1980. Interim Guidelines and Specifications for Preparing Quality Assurance Project Plans. QAMS-005/80.

ED_004144A_00000101-00337

This page intentionally left blank

ED_004144A_00000101-00338

Standard Operating Procedure No. 002
for
Chain-of-Custody Form

Prepared by

EA Engineering, Science, and Technology, Inc., PBC
225 Schilling Circle, Suite 400
Hunt Valley, Maryland 21031

Revision 0
December 2014

This page intentionally left blank

CONTENTS

Page

1. SCOPE AND APPLICATION 1
2. MATERIALS 1
3. PROCEDURE 1
4. MAINTENANCE 1
5. PRECAUTIONS 2
6. REFERENCES 2

ED_004144A_00000101-00341

This page intentionally left blank

ED_004144A_00000101-00342

1. SCOPE AND APPLICATION

The purpose of this Standard Operating Procedure is to delineate protocols for use of the chain-of-custody form. An example is provided as Figure SOP002-1. Other formats with similar levels of detail are acceptable.

2. MATERIALS

The following materials may be required: chain-of-custody form and indelible ink pen.

3. PROCEDURE

- Give the site name and project name/number.
- Enter the sample identification code.
- Indicate the sampling dates for all samples.
- List the sampling times (military format) for all samples.
- Indicate "grab" or "composite" sample with an "X."
- Specify the sample location.
- Enter the total number of containers per cooler.
- List the analyses/container volume.
- Obtain the signature of sample team leader.
- State the carrier service and airbill number, analytical laboratory, and custody seal numbers.
- Sign, date, and time the "relinquished by" section.
- Upon completion of the form, retain the shipper copy, and affix the other copies to the inside of the sample cooler, in a zip-seal bag to protect from moisture, to be sent to the designated laboratory.

4. MAINTENANCE

Not applicable.

ED_004144A_00000101-00343

5. PRECAUTIONS

None.

6. REFERENCES

U.S. Environmental Protection Agency (U.S. EPA). 1980. Interim Guidelines and Specifications for Preparing Quality Assurance Project Plans, QAMS-005/80.

———. 1990. Sampler's Guide to the Contract Laboratory Program. EPA/540/P-90/006, Directive 9240.0-06, Office of Emergency and Remedial Response, Washington, D.C. December.

———. 1991. User's Guide to the Contract Laboratory Program. EPA/540/O-91/002, Directive 9240.0-01D, Office of Emergency and Remedial Response. January.

ED_004144A_00000101-00344

Company Name:				Project Manager or Contact: Phone:	Parameters/Method Numbers for Analysis															Chain-of-Custody Record	
Project No. Dept.: Task:				Project Name:																EA Laboratories 231 Schilling Circle Hunt Valley, MD 21031 Telephone: (410) 584-7000	
Sample Storage Location:				ATO Number:																**Report Deliverables:** **1 2 3 4 D E** **EDD: Yes/No** **DUE TO CLIENT: _____**	
Page of			**Report #:**																		
Date	Time	Water	Soil	Sample Identification 19 Characters	**No. of Containers**															**EA Labs Accession Number**	Remarks
				XXXXXXXXXXXXXXXXXXX																	**LPM**:
				XXXXXXXXXXXXXXXXXXX																	
				XXXXXXXXXXXXXXXXXXX																	
				XXXXXXXXXXXXXXXXXXX																	
				XXXXXXXXXXXXXXXXXXX																	
				XXXXXXXXXXXXXXXXXXX																	
				XXXXXXXXXXXXXXXXXXX																	
				XXXXXXXXXXXXXXXXXXX																	
				XXXXXXXXXXXXXXXXXXX																	
				XXXXXXXXXXXXXXXXXXX																	
				XXXXXXXXXXXXXXXXXXX																	
				XXXXXXXXXXXXXXXXXXX																	
				XXXXXXXXXXXXXXXXXXX																	
				XXXXXXXXXXXXXXXXXXX																	
				XXXXXXXXXXXXXXXXXXX																	
				XXXXXXXXXXXXXXXXXXX																	
				XXXXXXXXXXXXXXXXXXX																	
				XXXXXXXXXXXXXXXXXXX																	
				XXXXXXXXXXXXXXXXXXX																	
				XXXXXXXXXXXXXXXXXXX																	
				XXXXXXXXXXXXXXXXXXX																	
				XXXXXXXXXXXXXXXXXXX																	
				XXXXXXXXXXXXXXXXXXX																	
				XXXXXXXXXXXXXXXXXXX																	

Company Name:				Project Manager or Contact: Phone:	Parameters/Method Numbers for Analysis																Chain-of-Custody Record		
Project No. Dept.: Task:				Project Name:																	EA Laboratories 231 Schilling Circle Hunt Valley, MD 21031 Telephone: (410) 584-7000		
Sample Storage Location:				ATO Number:																	**Report Deliverables:** **1 2 3 4 D E**		
Page of				**Report #:**																	**EDD: Yes/No** **DUE TO CLIENT: _____**		
Date	Time	Water	Soil	Sample Identification 19 Characters	**No. of Containers**																**EA Labs Accession Number**	Remarks	
				XXXXXXXXXXXXXXXXXXX																			
				XXXXXXXXXXXXXXXXXXX																			
				XXXXXXXXXXXXXXXXXXX																			
				XXXXXXXXXXXXXXXXXXX																			
				XXXXXXXXXXXXXXXXXXX																			
				XXXXXXXXXXXXXXXXXXX																			
				XXXXXXXXXXXXXXXXXXX																			
				XXXXXXXXXXXXXXXXXXX																			
				XXXXXXXXXXXXXXXXXXX																			
				XXXXXXXXXXXXXXXXXXX																			
				XXXXXXXXXXXXXXXXXXX																			
				XXXXXXXXXXXXXXXXXXX																			
Samples by: (Signature)					Date/Time	Relinquished by: (Signature)															Date/Time	Received by: (Signature)	Date/Time
Relinquished by: (Signature)					Date/Time	Received by Laboratory: (Signature)															Date/Time	Airbill Number:	Sample Shipped by: (Circle) Fed Ex. Puro. UPS Hand Carried Other:
Cooler Temp. _____C pH: ___ Yes ___ No Comments:																					**Custody Seals Intact ___ Yes ___ No**		
NOTE: Please indicate method number for analyses requested. This will help clarify any questions with laboratory techniques.																							

Standard Operating Procedure No. 003
for
Subsurface/Utility Clearance

Prepared by

EA Engineering, Science, and Technology, Inc., PBC
225 Schilling Circle, Suite 400
Hunt Valley, Maryland 21031

Revision 0
December 2014

This page intentionally left blank

CONTENTS

Page

1. SCOPE AND APPLICATION 1

   1.1 Purpose 1
   1.2 Limitations 1
   1.3 Scope 1

2. PROCEDURES 2

   2.1 Safety 2
   2.2 Preparation Tasks 2

      2.2.1 Obtain Permits and Site Access 2
      2.2.2 Historic Site Information 2
      2.2.3 Mark-Outs 3
      2.2.4 Initial Site Visit 4
      2.2.5 Utilities 4
      2.2.6 Other Subsurface Systems 5
      2.2.7 Selection of Ground Disturbance Locations 5
      2.2.8 Review of Selected Locations with the Client 5
      2.2.9 Ground Disturbance Activity Sequence 5

3. SUBSURFACE CLEARANCE METHODS 6

   3.1 Subsurface Clearance Procedures for Drilling, Direct-Push Technology, Augering, Fence Post Installation, or Other Borehole Installation Activities 6
   3.2 Subsurface Clearance Procedures for Trenching/Excavation Activities 7

APPENDIX A: SUBSURFACE CLEARANCE PROCEDURE CHECKLIST
APPENDIX B: UNIFORM COLOR CODES FOR MARKING OF UNDERGROUND FACILITIES

ED_004144A_00000101-00349

This page intentionally left blank

ED_004144A_00000101-00350

1. SCOPE AND APPLICATION

1.1 PURPOSE

The purpose of this Standard Operating Procedure is to prevent injury to workers and damage to subsurface structures (including tanks, pipe lines, water lines, gas lines, electrical service, etc.) during ground disturbance activities (including drilling, augering, sampling, use of direct-push technologies, excavation, trenching, concrete coring or removal, fence post installation, grading, or other similar operations).

1.2 LIMITATIONS

The procedures set forth in this document are the suggested procedures but may not be applicable to particular sites based on the site-specific considerations. The Project Manager is responsible for making a site-specific evaluation of each site to determine whether the Subsurface/Clearance Procedures should be utilized or require modification. If safety or other site-specific considerations require a modified or different procedure, the Project Manager should review the modified procedure with the Business Unit Director, Profit Center Manager, or Senior Technical Reviewer.

1.3 SCOPE

This procedure provides minimum guidance for subsurface clearance activities, which must be followed prior to and during ground disturbance activities at EA project sites. Even after completing the subsurface clearance activities required in this procedure, all ground disturbance activities should proceed with due caution.

Deviations from this procedure may be provided on an exception basis for specific situations, such as underground storage tank systems removals, verified aboveground/overhead services/lines, undeveloped land/idle facilities, shallow groundwater conditions, soil stability, or well construction quality assurance/quality control concerns, etc.

EA or its subcontractors are responsible for, and shall ensure that, all ground disturbance activities are completed safely, without incident, and in accordance with applicable federal, state, and local regulations.

This procedure shall not override any site-specific or consultant/contractor procedures that are more stringent or provide a greater degree of safety or protection of health or the environment.

ED_004144A_00000101-00351

2. PROCEDURES

The EA Project Manager or his designee must complete the Subsurface Clearance Procedure Checklist (Appendix A) in conjunction with the following procedures. The checklist must be completed before initiating any ground disturbance activities. The completed checklist must be submitted to the appropriate team individuals, subcontractors, and/or the client and included in the project files.

2.1 SAFETY

A Health and Safety Plan must be available onsite and followed by all contractors and subcontractors.

All work areas shall be defined and secured with safety cones, safety tape, construction fence, other barriers, or signs as appropriate.

Site work permits must be obtained as required by site procedures. Based on site conditions or classification, the use of intrinsically-safe equipment may be required.

To ensure the safety of all onsite personnel and subsurface structure integrity, consideration should be given to de-energizing and locking out selected site utilities or temporarily shutting down a portion of or the entire facility.

2.2 PREPARATION TASKS

Objective—To gather all relevant information about potential subsurface structures prior to the actual site visit.

2.2.1 Obtain Permits and Site Access

The consultant/contractor is responsible for following all applicable laws, guidance, and approved codes of practice; obtaining all necessary permits and utility clearances; and securing site access permission.

2.2.2 Historic Site Information

Obtain most recent as-built drawings and/or site plans (including underground storage tank, product, and vent lines) as available.

NOTE: As-built drawings may not accurately depict the locations and depths of improvements and subsurface structures and should, therefore, not be **solely** relied upon.

EA should obtain any other site information such as easements, right-of-ways, historical plot plans, fire insurance plans, tank (dip) charts, previous site investigations, soil surveys, boring logs, and aerial photographs, etc. as relevant to the planned ground disturbance activities.

ED_004144A_00000101-00352

Where applicable, EA should also contact contract personnel who may have historic site knowledge.

2.2.3 Mark-Outs

Objective—To identify location of subsurface structures on surface.

EA must ensure that a thorough mark-out at the site is completed to locate electrical, gas, telephone, water, sewer, low voltage electric lines, product delivery pipelines, fiber optic, and all other subsurface utilities/services.

- Where available, public utility companies must be contacted to identify underground utilities. (This can be accomplished through the One-Call system in most instances.)

- In addition, where available and warranted by site conditions, a private utility/pipeline mark-out company should be contracted to perform an electronic subsurface survey to identify the presence of suspected hazardous or critical underground utilities and subsurface structures. In some cases, this is necessary to confirm public utility mark-outs in the vicinity of planned ground disturbance activities.

EA will review all available site plan subsurface information with the private mark-out company to assist in locating utilities and other subsurface structures.

NOTE: Mark-outs may not accurately depict the exact locations of improvements and subsurface structures and should, therefore, not be **solely** relied upon.

Where possible, EA personnel are encouraged to be onsite at the time of subsurface mark-outs. This is to ensure accuracy and understanding of subsurface structures identified and provides an opportunity to exchange information with mark-out company personnel regarding planned work activities.

Subsurface structures should be marked throughout the entire work area(s) with adequate materials (e.g., site conditions may require paint and tape/flags). Ground disturbance activities must be started within 30 days of mark-out, unless local ordinances specify a shorter time period. If activities are not started within required time period or markings have faded, mark-outs must be redone.

EA personnel will record time and date of mark-out request and list all companies contacted by the service and confirmation number. This should be available for review onsite and checked off after visual confirmation of markings.

ED_004144A_00000101-00353

2.2.4 Initial Site Visit

Objective—To compare the site plan to actual conditions based on information gathered in Procedures 2 and 3 above, obtain additional site information needed, and prepare a vicinity map.

EA will document all findings and update the site plan with this information. On third party sites, close coordination with the site owner's representatives for mark-outs, review of as-builts, and other information reviews should be conducted prior to work. Project Managers are encouraged to provide updated as-built information to the client.

In some regions, it may be more effective and efficient to conduct the site visit at the same time the contractor and drill rig are mobilized to the site. The inspection should include the following activities and may include others as determined by the consultant/contractor and the Project Manager.

2.2.5 Utilities

EA shall perform a detailed site walk-through for the purpose of identifying all aboveground indicators of subsurface utilities/services that may be leading to or from buildings within the planned work area. The inspection shall include, but not be limited to, the following:

- Utility mark-outs
- Aboveground utilities
- Area lights/signs
- Phones
- Drains
- Junction boxes
- Natural gas meters or connections
- Other utilities including: fire hydrants, on/below grade electrical transformers, splice cages, sewer lines, pipeline markers, cable markers, valve box covers, clean-outs/traps, sprinkler systems, steam lines (including insulated tanks that may indicate steam lines), and cathodic protection on lines/tanks
- Observe paving scars (i.e., fresh asphalt/concrete patches, scored asphalt/concrete).

ED_004144A_00000101-00354

NOTE: In many cases, the onsite location of low-voltage electrical lines and individual property water and sewer line branches may be approximated by using the following technique:

- Locate the entry/connection location at the facility building
- Attempt to identify utility connections for the mains (water sewer, etc.) by locating clean-outs, valve manways, etc. The location path of the utility is likely with the area between the main connection and facility building connection. Subsurface electrical line locations from the facility building to signs, lamps, etc. can be estimated with the same process.

2.2.6 Other Subsurface Systems

Some other subsurface systems to be cognizant of during subsurface activities include product delivery systems (i.e., at gas stations) and existing remediation systems.

2.2.7 Selection of Ground Disturbance Locations

EA will utilize the information collected to this point in combination with regulatory requirements and project objectives to select ground disturbance locations. Ground disturbance locations should also consider the location of overhead obstructions (e.g., power lines). Work at active gasoline retail locations must consider several special considerations that should be outlined in the site-specific safety and health plan.

2.2.8 Review of Selected Locations with the Client

EA will review the selected ground disturbance locations with the client. EA will not proceed with the subsurface activities until the plan has been discussed with the client. During execution of the project, subsurface activities are required outside of the area previously approved by the client. EA will submit these changes to the client for approval prior to execution.

2.2.9 Ground Disturbance Activity Sequence

EA will plan ground disturbance activities starting at the point farthest from the location of suspected underground improvements. This is done to determine the natural subsurface conditions and to allow EA site personnel to recognize fill conditions.

Experience has shown that the following warning signs may indicate the presence of a subsurface structure:

- Warning tape (typically indicative of underground services).
- Pea gravel/sand/non-indigenous material (typically indicative of tanks or lines).
- Red concrete (typically indicative of electrical duct banks).

ED_004144A_00000101-00355

- The abrupt absence of soil recovery in a hand auger. This could indicate pea gravel or sand that has spilled out of the auger. This may not be indicative in areas where native soil conditions typically result in poor hand auger recoveries.

- Any unexpected departure from the native soil or backfill conditions as established by prior onsite digging.

If any of these conditions is encountered by EA site personnel, digging should stop and the client should be contacted.

3. SUBSURFACE CLEARANCE METHODS

The method used to delineate the subsurface should be compatible with the inherent associated risk given the type of facility/property, soil stratigraphy, and the location of the ground disturbance activity, such that required delineation is obtained. It should be noted that in areas where there is paving, sufficient paving should be removed to allow clear visibility of the subsurface conditions during clearance activities. The following is a list of potential clearance methods that may be used on a job site:

- Vacuum digging
- Probing
- Hand digging
- Hand augering
- Post-hole digging.

EA personnel will evaluate the potential for electrical shock or fire/explosion for each subsurface disturbance project and will evaluate as necessary the use of non-conductive or non-sparking tools (i.e., fiberglass hand shovels, and thick electrically insulating rubber grips on hand augers or probes). The potential need for the use of non-conductive materials, electrical safety insulated gloves, and footwear will also be evaluated on a case-by-case basis.

3.1 SUBSURFACE CLEARANCE PROCEDURES FOR DRILLING, DIRECT-PUSH TECHNOLGY, AUGERING, FENCE POST INSTALLATION, OR OTHER BOREHOLE INSTALLATION ACTIVITIES

The area to be delineated will exceed the diameter of the largest tool to be advanced and sufficiently allow for visual inspection of any obstructions encountered.

ED_004144A_00000101-00356

3.2 SUBSURFACE CLEARANCE PROCEDURES FOR TRENCHING/ EXCAVATION ACTIVITIES

Appropriate subsurface clearance methods should be conducted along the length and width of the excavation at a frequency sufficient to ensure adequate precautions have been applied to the entire work area. The frequency and density of investigations will be based on site knowledge, potential hazards, and risks of the work area to surrounding locations (e.g., proximity to a residential area or school).

Whenever subsurface structures are exposed, EA will cease work and mark the area (e.g., flags, stakes, cross bracing) to ensure the integrity of these exposed structures is maintained during subsequent trenching/excavation/backfilling.

Uniform color codes for marking of underground facilities are provided in Appendix B.

ED_004144A_00000101-00357

This page intentionally left blank

ED_004144A_00000101-00358

Appendix A

Subsurface Clearance Procedure Checklist

ED_004144A_00000101-00359

This page intentionally left blank

ED_004144A_00000101-00360

Subsurface Clearance Procedure Checklist

Site Identification: _____

Project Consultant/Contractor: _____

Section 1: Safety, Preparation Tasks, and Mark-Outs

Activity	Yes	No	N/A	Comments including Justification if Response Is No or Not Applicable
Health and Safety Plan is available and all contractors and subcontractors are familiar with it.				
All applicable local, state, and federal permits have been obtained.				
Site access/permission has been secured.				
Most recent as-built drawings and/or site plans (including underground storage tank, product, and vent lines) obtained.				
Reviewed site information to identify subsurface structures relevant to planned site activities (easements, rights-of-way, historical plot plans, fire insurance plans, tank dip charts, previous site investigations, soil surveys, boring logs, aerial photographs, etc.).				
Utility mark-outs have been performed by public utility company(s). Mark-outs clear/visible.				
Subsurface structure mark-outs performed by private mark-out company. Mark-outs clear/visible.				
Additional Activities: Were dig locations reviewed with site representative?				

Section 2: Initial Site Visit and Selecting Ground Disturbance Locations

Activity	Yes	No	N/A	Comments including Justification if Response Is No or Not Applicable
Location of all aboveground indicators of subsurface utilities/services that may be leading to or from buildings within the planned work area has been identified.				
Location of utility mark-outs by all utility companies previously contacted has been identified within required time period.				
Location of all subsurface structure mark-outs by private mark-out company has been identified within required time period.				
Location of area lights/signs and associated subsurface lines identified.				
Location of all phones and associated subsurface lines identified.				
Location of all drains and associated interconnecting lines identified.				
Location of all electrical junction boxes and associated interconnecting lines identified				
Location of all natural gas meters or connections and all interconnecting lines identified				

Completed by: _____
Name

Signature: _____ _____
Company Date

ED_004144A_00000101-00361

This page intentionally left blank

ED_004144A_00000101-00362

Appendix B

Uniform Color Codes for Excavation

ED_004144A_00000101-00363

This page intentionally left blank

ED_004144A_00000101-00364

APWA UNIFORM COLOR CODE

WHITE - Proposed Excavation

PINK - Temporary Survey Markings

RED - Electric Power Lines, Cables, Conduit and Lighting Cables

YELLOW - Gas, Oil, Steam, Petroleum or Gaseous Materials

ORANGE - Communication, Alarm or Signal Lines, Cables or Conduit

BLUE - Potable Water

PURPLE - Reclaimed Water, Irrigation and Slurry Lines

GREEN - Sewers and Drain Lines

TYPICAL MARKING

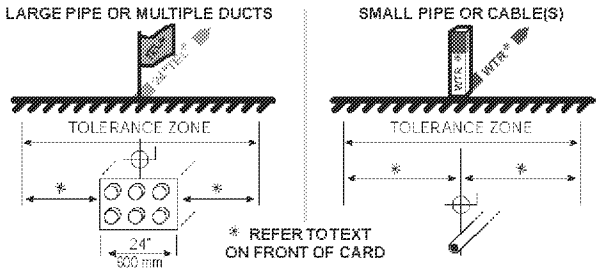

Customize with your center's phone and address information

GUIDELINES FOR UNIFORM TEMPORARY MARKING OF UNDERGROUND FACILITIES

This marking guide provides for universal use and understanding of the temporary marking of subsurface facilities to prevent accidents and damage or service interruption by contractors, excavators, utility companies, municipalities or any others working on or near underground facilities.

ONE-CALL SYSTEMS
The One-Call damage prevention system shall be contacted prior to excavation.

PROPOSED EXCAVATION
Use white marks to show the location, route or boundary of proposed excavation. Surface marks on roadways do not exceed 1.5" by 18" (40 mm by 450 mm). The facility color and facility owner identity may be added to white flags or stakes.

USE OF TEMPORARY MARKING
Use color-coded surface marks (i.e., paint or chalk) to indicate the location or route of active and out-of-service buried lines. To increase visibility, color coded vertical markers (i.e., stakes or flags) should supplement surface marks. Marks and markers indicate the name, initials or logo of the company that owns or operates the line, and width of the facility if it is greater than 2" (50 mm). Marks placed by other than line owner/operator or its agent indicate the identity of the designating firm. Multiple lines in joint trench are marked in tandem. If the surface over the buried line is to be removed, supplementary offset markings are used. Offset markings are on a uniform alignment and clearly indicate the actual facility is a specific distance away.

TOLERANCE ZONE
Any excavation within the tolerance zone is performed with non-powered hand tools or non-invasive method until the marked facility is exposed. The width of the tolerance zone may be specified in law or code. If not, a tolerance zone including the width of the facility plus 18" (450 mm) measured horizontally from each side of the facility is recommended.

ADOPT UNIFORM COLOR CODE
The American Public Works Association encourages public agencies, utilities, contractors, other associations, manufacturers and all others involved in excavation to adopt the APWA Uniform Color Code, using ANSI standard Z535.1 Safety Colors for temporary marking and facility identification.

Rev. 4/99

This page intentionally left blank

ED_004144A_00000101-00366

Standard Operating Procedure No. 004
for
Sample Packing and Shipping

Prepared by

EA Engineering, Science, and Technology, Inc., PBC
225 Schilling Circle, Suite 400
Hunt Valley, Maryland 21031

Revision 0
December 2014

This page intentionally left blank

CONTENTS

Page

1. SCOPE AND APPLICATION 1
2. MATERIALS 1
3. PROCEDURE 1
4. MAINTENANCE 2
5. PRECAUTIONS 2
6. REFERENCES 2

ED_004144A_00000101-00369

This page intentionally left blank

ED_004144A_00000101-00370

1. SCOPE AND APPLICATION

The purpose of this Standard Operating Procedure (SOP) is to delineate protocols for the packing and shipping of samples to the laboratory for analysis.

2. MATERIALS

The following materials may be required:

Clear tape	Plastic garbage bags
Custody seals	Sample documentation
Ice	Waterproof coolers (hard plastic or metal)
Metal cans with friction-seal lids (e.g., paint cans)	Zip-seal plastic bags
Packing material[1]	

3. PROCEDURE

Check cap tightness and verify that clear tape covers label and encircles container. Wrap sample container in bubble wrap or closed cell foam sheets. Enclose each sample in a clear zip-seal plastic bag.

Place several layers of bubble wrap, or at least 1 in. of vermiculite on the bottom of the cooler. Line cooler with open garbage bag, place all the samples upright inside a garbage bag, and tie the bag.

Double bag and seal loose ice to prevent melting ice from soaking the packing material. Place the ice outside the garbage bags containing the samples.

Pack shipping containers with packing material (closed-cell foam, vermiculite, or bubble wrap). Place this packing material around the sample bottles or metal cans to avoid breakage during shipment.

Enclose all sample documentation (i.e., Field Parameter Forms, chain-of-custodies) in a waterproof plastic bag and tape the bag to the underside of the cooler lid. If more than one cooler is being used, each cooler will have its own documentation.

Seal the coolers with signed and dated custody seals so that if the cooler were opened, the custody seal would be broken. Place clear tape over the custody seal to prevent damage to the seal.

1. Permissible packing materials are: (a) (non-absorbent) bubble wrap or closed cell foam packing sheets, or (b) (absorbent) vermiculite. Organic materials such as paper, wood shavings (excelsior), and cornstarch packing "peanuts" will not be used.

ED_004144A_00000101-00371

Refer to SOP Nos. 001, 002, 016, and 039.

Tape the cooler shut with packing tape over the hinges and place tape over the cooler drain. Ship all samples via overnight delivery on the same day they are collected if possible.

4. MAINTENANCE

Not applicable.

5. PRECAUTIONS

Any samples suspected to be of medium/high contaminant concentration or containing dioxin must be enclosed in a metal can with a clipped or sealable lid (e.g., similar to a paint can). Label the outer metal container with the sample number of the sample inside.

6. REFERENCES

U.S. Environmental Protection Agency (U.S. EPA). 1980. Interim Guidelines and Specifications for Preparing Quality Assurance Project Plans, QAMS-005/80.

———. 1990. Sampler's Guide to the Contract Laboratory Program. EPA/540/P-90/006, Directive 9240.0-06, Office of Emergency and Remedial Response, Washington, D.C. December.

———. 1991. User's Guide to the Contract Laboratory Program. EPA/540/O-91/002, Directive 9240.0-01D, Office of Emergency and Remedial Response. January.

ED_004144A_00000101-00372

Standard Operating Procedure No. 005
for
Field Decontamination

Prepared by

EA Engineering, Science, and Technology, Inc., PBC
225 Schilling Circle, Suite 400
Hunt Valley, Maryland 21031

Revision 1
December 2014

This page intentionally left blank

CONTENTS

Page

1. SCOPE AND APPLICATION 1

2. MATERIALS 1

3. PROCEDURE 1

3.1 Sample Bottles 1
3.2 Personnel Decontamination 1
3.3 Equipment Decontamination 2

3.3.1 Water Samplers 2

3.3.1.1 Bailers 2
3.3.1.2 Pumps 2
3.3.1.3 Dip Samplers 3
3.3.1.4 Labware 3
3.3.1.5 Water Level Indicators 3

3.3.2 Solid Materials Samplers 3
3.3.3 Other Sampling and Measurement Probes 4
3.3.4 Drilling Rigs, Sediment Sampling Vessels, and Other Heavy Equipment 5
3.3.5 High Performance Liquid Chromatography-Grade Water Storage 5
3.3.6 Ice Chests and Reusable Shipping Containers 6

4. MAINTENANCE 6

5. PRECAUTIONS 7

6. REFERENCES 7

ED_004144A_00000101-00375

This page intentionally left blank

ED_004144A_00000101-00376

1. SCOPE AND APPLICATION

All personnel or equipment involved in intrusive sampling, or that enter a hazardous waste site during intrusive sampling, must be thoroughly decontaminated prior to leaving the site to minimize the spread of contamination and prevent adverse health effects. This Standard Operating Procedure describes the normal decontamination of sampling equipment and site personnel.

2. MATERIALS

The following materials may be required:

0.01N HCl	Non-phosphate laboratory detergent (liquinox)
0.10N nitric acid	Plastic garbage bags
Aluminum foil or clean plastic sheeting	Plastic sheeting, buckets, etc. to collect wash water and rinsates
Approved water	Pressure sprayer, rinse bottles, brushes
High performance liquid chromatography (HPLC)-grade water[1]	Reagent grade alcohol[2]

3. PROCEDURE

3.1 SAMPLE BOTTLES

At the completion of each sampling activity, the exterior surfaces of the sample bottles must be decontaminated as follows:

- Ensure the bottle lids are on tight.
- Wipe the outside of the bottle with a paper towel to remove gross contamination.

3.2 PERSONNEL DECONTAMINATION

Review the project Health and Safety Plan for the appropriate decontamination procedures.

1. For the purposes of this Standard Operating Procedure, HPLC-grade water is considered equivalent to "deionized ultra filtered water," "reagent-grade distilled water," and "deionized organic-free water." The end product is water that is pure with no spurious ions or organics to contaminate the sample. The method of generation is left to the individual contractor.
2. For the purposes of this Standard Operating Procedure, the term "reagent grade alcohol" refers to either pesticide grade isopropanol or reagent grade methanol.

ED_004144A_00000101-00377

3.3 EQUIPMENT DECONTAMINATION

3.3.1 Water Samplers

3.3.1.1 Bailers

After each use, polytetrafluoroethelyne (PTFE) double check valve bailers used for groundwater sampling will be decontaminated as follows:

- Discard all ropes used in sampling in properly marked sealable container, or as directed by the Health and Safety Plan. NOTE: No tubing is to be used in conjunction with a bailer in collecting samples.
- Scrub the bailer to remove gross (visible) contamination, using appropriate brush(es), approved water, and non-phosphate detergent.
- Rinse off detergent three times with approved water.
- Rinse bailer with reagent grade alcohol.
- Rinse bailer three times with HPLC-grade water.
- Rinse bailer with 0.10N nitric acid solution.
- Rinse bailer three times with HPLC-grade water.
- Allow bailer to air dry.[3]
- Wrap bailer in aluminum foil or clean plastic sheeting, or store in a clean, dedicated polyvinyl chloride or PTFE storage container.
- Dispose of used decontamination solutions with drummed purge water.
- Rinse bailer with HPLC-grade water immediately prior to re-use.

3.3.1.2 Pumps

Submersible pumps will be decontaminated as follows:

3. If the bailer has just been used for purging and is being decontaminated prior to sampling, do not air dry. Double rinse with HPLC-grade water and proceed to collect samples.

ED_004144A_00000101-00378

- Scrub the exterior of the pump to remove gross (visible) contamination, using appropriate brush(es), approved water, and non-phosphate detergent. (Steam cleaning may be substituted for detergent scrub.)

- Calculate the volume of pump plus any tubing which is not disposable and not dedicated to a single well. Pump three volumes of non-phosphate laboratory detergent solution to purge and clean the interior of the pump.

- Rinse by pumping no less than nine volumes of approved water to rinse.

- Rinse pump exterior with reagent grade alcohol.

- Rinse pump exterior with HPLC-grade water.

- Allow pump to air dry.

- Wrap pump in aluminum foil or clean plastic sheeting, or store in a clean, dedicated polyvinyl chloride or PTFE storage container.

- Prior to reusing pump rinse exterior again with HPLC-grade water. (Double rinse in Bullet 5 above may be substituted for this step).

3.3.1.3 Dip Samplers

All dip samplers, whether bucket, long-handled, or short-handled, will be decontaminated in the same manner as provided in Section 3.3.1.1.

3.3.1.4 Labware

Labware, such as beakers, which are used to hold samples for field measurements, water chemistry, etc., will be decontaminated according to the procedures in Section 3.3.1.1.

3.3.1.5 Water Level Indicators

Electric water level indicators, weighted measuring tapes, or piezometers used in the determination of water levels, well depths, and/or non-aqueous phase liquid levels will be decontaminated in accordance with Section 3.3.1.1. Clean laboratory wipes may be substituted for brushes. Tapes, probes, and piezometers should be wiped dry with clean laboratory wipes, and coiled on spools or clean plastic sheeting rather than allowed to air dry.

3.3.2 Solid Materials Samplers

Solid materials samplers include soil and sediment sampling probes, augers, trowels, shovels, sludge samplers, and other sampling equipment (e.g., core tubes, grab samples, core catchers, core liners, scoops, spoons, etc.), which will be decontaminated as follows:

ED_004144A_00000101-00379

- Scrub the sampler to remove gross (visible) contamination, using appropriate brush(es), approved water, and non-phosphate laboratory detergent.
- Rinse off detergent with approved water.
- Rinse sampler with reagent grade alcohol.
- Rinse sampler with HPLC-grade water.
- For non-metallic samplers only, rinse sampler with 0.10N nitric acid solution.
- For non-metallic samplers only, rinse sampler with HPLC-grade water.
- Allow sampler to air dry.
- Wrap sampler in aluminum foil clean plastic sheeting, or store in a new zipseal bag (size permitting) or clean, dedicated polyvinyl chloride or PTFE storage container.
- Dispose used decontamination solutions properly according to the site-specific Health and Safety Plan.
- Rinse sampler with HPLC-grade water immediately prior to re-use.

For larger sediment sampling equipment, if sediment can be collected from the interior of a sampling device and away from potentially contaminated surfaces of the sampler, a site water rinse may be sufficient between stations. A site water rinse may also be sufficient for vessel surfaces between sample locations. However, all tools and equipment coming into contact with the sample should be decontaminated in accordance with the procedures above. Wash water from decontamination activities should be collected and disposed of properly. Specific projects and programs may have additional decontamination requirements.

3.3.3 Other Sampling and Measurement Probes

Soil (or sediment) gas sampling probes will be decontaminated as solids sampling devices.

Temperature, pH, conductivity, redox, and dissolved oxygen probes will be decontaminated according to manufacturer's specifications. If no such specifications exist, remove gross contaminant and triple rinse probe with HPLC-grade water. A summary of the decontamination procedures to be used must be included in the instrument-specific standard operating procedure.

Measuring tapes that become contaminated through contact with soil or sediment during field use will be decontaminated as follows:

ED_004144A_00000101-00380

- Wipe tape with a clean cloth or laboratory wipe that has been soaked with non-phosphate laboratory detergent solution to remove gross contamination. Rinse cloth in the solution and continue wiping until tape is clean.

- Wipe tape with a second clean, wet cloth (or laboratory wipe) to remove soap residues.

- Dry tape with a third cloth (or laboratory wipe) and rewind into case, or re-coil tape.

3.3.4 Drilling Rigs, Sediment Sampling Vessels, and Other Heavy Equipment

All drilling rigs, sediment sampling vessels, and associated equipment such as augers, drill casing, rods, samplers, tools, recirculation tank, and water tank (inside and out) will be decontaminated prior to site entry after over-the-road mobilization and immediately upon departure from a site after drilling a hole. Supplementary cleaning will be performed prior to site entry when there is a likelihood that contamination has accumulated on tires and as spatter or dust enroute from one site to the next.

- Place contaminated equipment in an enclosure designed to contain all decontamination residues (water, sludge, etc.).

- Steam clean equipment until all dirt, mud, grease, asphaltic, bituminous, or other encrusting coating materials (with the exception of manufacturer-applied paint) have been removed.

- Water used will be taken from an approved source.

- Containerize in 55-gal drums; sample; characterize; and, based on sample results, dispose of all decontamination residues properly.

Other heavy equipment includes use of backhoes, excavators, skid steers, etc. If heavy equipment is utilized during field activities, i.e., a backhoe for test pitting, the bucket should not come in contact with soil to be sampled. If the bucket contacts the soil to be sampled, then it should be decontaminated between sample locations, following the same procedures as listed above for a drill rig.

3.3.5 High Performance Liquid Chromatography-Grade Water Storage

Dedicated glass storage containers will be used solely for dispensing HPLC-grade water. New HPLC-grade water containers will be decontaminated as follows:

- Clean with tap water from approved source and non-phosphate laboratory detergent while scrubbing the exterior and interior of the container with a stiff-bristled brush.

- Rinse thoroughly with approved water.

ED_004144A_00000101-00381

- Rinse with 0.01N nitric acid.
- Rinse with approved water.
- Rinse thoroughly with HPLC-grade water.
- Fill clean container with HPLC-grade water. Cap with one layer of PTFE-lined paper and one layer of aluminum foil. Secure cap with rubber band and date the container.

Used HPLC-grade water containers will be decontaminated as follows:

- Clean the exterior with tap water from an approved source, non-phosphate laboratory detergent, and a stiff-bristled brush.
- Rinse the exterior thoroughly with HPLC-grade water.
- Rinse the interior twice with pesticide-grade isopropanol.
- Rinse interior thoroughly with HPLC-grade water.
- Fill clean container with HPLC-grade water. Cap with one layer of PTFE-lined paper and one layer of aluminum foil. Secure cap with rubber band and date the container.

3.3.6 Ice Chests and Reusable Shipping Containers

- Scrub exterior/interior with approved brush and liquinox detergent.
- Rinse off detergent three times with approved water.
- Let air dry and properly store until re-use.

NOTE: If container/ice chest is severely contaminated, clean as thoroughly as possible, render unusable, and properly dispose.

4. MAINTENANCE

HPLC-grade water will be stored only in decontaminated glass containers with aluminum foil lids as stipulated above. The water may not be stored for more than nor used more than 3 days after manufacture.

HPLC-grade water will be manufactured onsite. An approved tap water source will be used as the influent to the system. Procedures for system setup, operation, and maintenance will conform to manufacturer's specifications.

ED_004144A_00000101-00382

5. PRECAUTIONS

Dispose of all wash water, rinse water, rinsates, and other sampling wastes (tubing, plastic sheeting, etc.) in properly marked, sealable containers, or as directed by the Health and Safety Plan.

Once a piece of equipment has been decontaminated, be careful to keep it in such condition until needed.

Do not eat, smoke, or drink onsite.

6. REFERENCES

Site-specific Health and Safety Plan.

ED_004144A_00000101-00383

This page intentionally left blank

ED_004144A_00000101-00384

Standard Operating Procedure No. 006
for
Summa Canister Sampling

Prepared by

EA Engineering, Science, and Technology, Inc., PBC
225 Schilling Circle, Suite 400
Hunt Valley, Maryland 21031

Revision 1
December 2014

This page intentionally left blank

CONTENTS

Page

1. SCOPE AND APPLICATION 1

2. METHOD SUMMARY 2

3. SAMPLE PRESERVATION, CONTAINERS, HANDLING, AND STORAGE 2

4. INTERFERENCES AND POTENTIAL PROBLEMS 3

5. EQUIPMENT/APPARATUS 3

   5.1 Subatmospheric Pressure Sampling Equipment 3
   5.2 Pressurized Sampling Equipment 3

6. REAGENTS 4

7. PROCEDURE 4

   7.1 Subatmospheric Pressure Sampling 4

      7.1.1 Sampling Using a Fixed Orifice, Capillary, or Adjustable Micrometering Valve 4

         7.1.1.1 Sampling Using a Fixed Orifice Valve Summa Canister 4

      7.1.2 Sampling Using a Mass Flow Controller, Vacuum Pump Arrangement (Andersen Sampler Model 87-100) 7

   7.2 Pressurized Sampling 7

      7.2.1 Sampling Using a Mass Flow Controller, Vacuum Pump Arrangement (Andersen Sampler Model 87-100) 7

8. CALCULATIONS 8

9. QUALITY ASSURANCE/QUALITY CONTROL 9

10. DATA VALIDATION 9

ED_004144A_00000101-00387

Page

11. SAFETY AND HEALTH 9

12. REFERENCES 9

APPENDIX A: SUBATMOSPHERIC/PRESSURIZED SAMPLING EQUIPMENT
APPENDIX B: SUMMA AIR SAMPLING WORK SHEET

ED_004144A_00000101-00388

1. SCOPE AND APPLICATION

The purpose of this Standard Operating Procedure is to describe a procedure for the sampling of volatile organic compounds (VOCs) in ambient air. The method is based on samples collected as whole air samples in Summa-passivated stainless steel canisters. The VOCs are subsequently separated by gas chromatography and measured by mass-selective detector or multidetector techniques. This method presents procedures for sampling into canisters at final pressures both above and below atmospheric pressure (respectively referred to as pressurized and subatmospheric pressure sampling). This method is applicable to specific VOCs that have been tested and determined to be stable when stored in pressurized and subatmospheric pressure canisters. The organic compounds that have been successfully collected in pressurized canisters by this method are listed in the VOC Data Sheet below:

Compound (Synonym)	Formula	Molecular Weight	Boiling Point (°C)	Melting Point (°C)	CAS Number
Freon 12 (Dichlorodifluoromethane	Cl_2CF_2	120.91	-29.8	-158.0	
Methyl chloride (Chloromethane)	CH_3Cl	50.49	-24.2	-97.1	74-87-3
Freon 114 (1,2-Dichloro-1,1,2,2-tetrafluoroethane)	$ClCF_2CClF_2$	170.93	4.1	-94.0	
Vinyl chloride (Chloroethylene	CH_2=CHCl	62.50	-13.4	-1,538.0	75-01-4
Methyl bromide (Bromomethane)	CH_3Br	94.94	3.6	-93.6	74-83-9
Ethyl chloride (Chloroethane)	CH_3CH_2Cl	64.52	12.3	-136.4	75-00-3
Freon 11 (Trichlorofluoromethane)	CCl_3F	137.38	23.7	-111.0	
Vinylidene chloride (1,1-Dichloroethene)	$C_2H_2Cl_2$	96.95	31.7	-122.5	75-35-4
Dichlormethane (Methylene chloride)	CH_2Cl_2	84.94	39.8	-95.1	75-09-2
Freon 113 (1,1,2-Trichloro-1,2,2-trifluoroethane)	CF_2ClCCl_2F	187.38	47.7	-36.4	
1,1-Dichloroethane (Ethylidene chloride)	CH_3CHC1_2	98.96	57.3	-97.0	74-34-3
cis-1,2-Dichloroethylene	CHCl=CHCl	96.94	60.3	-80.5	
Chloroform (Trichloromethane)	$CHCl_3$	119.38	61.7	-53.5	67-66-3
1,2-Dichloroethane (Ethylene dichloride)	$ClCH_2CH_2C1$	98.96	83.5	-35.3	107-06-2
Methyl chloroform (1,1,1-Trichloroethane)	CH_3CCl_3	`133.41	74.1	-30.4	71-55-6
Benzene (Cyclohexatriene)	C_6H_6	78.12	80.1	5.5	71-43-2
Carbon tetrachloride (Tetrachloromethane)	CCl_4	153.82	76.5	-23.0	56-23-5
1,2-Dichloropropane (Propylene dichloride)	$CH_3CHClCH_2Cl$	112.99	96.4	-100.4	78-87-5
Trichloroethylene (Trichloroethene)	$ClCH=CCl_2$	131.29	87	-73.0	79-01-6
cis-1,3-Dichloropropene (*cis*-1,3-Dichloropropylene)	CH_3CCl=CHCl	110.97	76		
trans-1,3-Dichloropropene (*cis*-1,3-Dichloropropylene)	$ClCH_2CH$=CHCl	110.97	112.0		
1,1,2-Trichloroethane (Vinyl trichloride)	$CH_2ClCHCl_2$	133.41	113.8	-36.5	79-00-5
Toluene (Methyl benzene)	$C_6H_5CH_3$	92.15	110.6	-95.0	108-88-3
1,2-Dibromoethane (Ethylene dibromide)	$BrCH_2CH_2Br$	187.88	131.3	9.8	106-93-4
Tetrachloroethylene (Perchloroethylene)	$Cl_2C=CCl_2$	165.83	121.1	-19.0	127-18-4
Chlorobenzene (Phenyl chloride)	C_6H_5Cl	112.56	132.0	-45.6	108-90-7
Ethylbenzene	$C_6H_5C_2H_5$	106.17	136.2	-95.0	100-41-4
m-Xylene (1,3-Dimethylbenzene)	$1,3-(CH_3)_2C_6H_4$	106.17	139.1	-47.9	
p-Xylene (1,4-Dimethylxylene)	$1,4-(CH_3)_2C_6H_4$	106.17	138.3	13.3	
Styrene (Vinyl benzene)	$C_6H_5CH=CH_2$	104.16	145.2	-30.6	100-42-5
1,1,2,2-Tetrachloroethane	$CHCl_2CHCl_2$	167.85	146.2	-36.0	79-34-5
o-Xylene (1,2-Dimethylbenzene)	$1,2-(CH_3)_2C_6H_4$	106.17	144.4	-25.2	
1,3,5-Trimethylbenzene (Mesitylene)	$1,3,5-(CH_3)_3C_6H_6$	120.20	164.7	-44.7	108-67-8

ED_004144A_00000101-00389

Compound (Synonym)	Formula	Molecular Weight	Boiling Point (°C)	Melting Point (°C)	CAS Number
1,2,4-Trimethylbenzene (Pseudocumene)	$1,2,4\text{-}(CH_3)_3C_6H_6$	120.20	169.3	-43.8	95-63-6
m-Dichlorobenzene (1,3-Dichlorobenzene)	$1,3\text{-}Cl_2C_6H_4$	147.01	173.0	-24.7	541-73-1
Benzyl chloride (*a*-Chlorotoluene)	$C_6H_5CH_2Cl$	126.59	179.3	-39.0	100-44-7
o-Dichlorobenzene (1,2-Dichlorobenzene)	$1,2\text{-}Cl_2C_6H_4$	147.01	180.5	-17.0	95-50-1
p-Dichlorobenzene (1,4-Dichlorobenzene)	$1,4\text{-}Cl_2C_6H_4$	147.01	174.0	53.1	106-46-7
1,2,4-Trichlorobenzene	$1,2,4\text{-}Cl_3C_6H_3$	181.45	213.5	17.0	120-82-1
Hexachlorobutadiene (1,1,2,3,4,4-Hexachloro-1,3-butadiene)					

These compounds have been measured at the parts per billion by volume level. These are standard (i.e., typically applicable) operating procedures which may be varied or changed as required, dependent on site conditions, equipment limitations, or limitations imposed by the procedure or other procedure limitations. In all instances, the ultimate procedures employed should be documented and associated with the final report.

Mention of trade names or commercial products does not constitute U.S. Environmental Protection Agency endorsement or recommendation for use.

2. METHOD SUMMARY

Both subatmospheric pressure and pressurized sampling modes use an initially evacuated canister. Both modes may also use a mass flow controller/vacuum pump arrangement to regulate flow. With the above configuration, a sample of ambient air is drawn through a sampling train comprised of components that regulate the rate and duration of sampling into a pre-evacuated Summa-passivated canister. Alternatively, subatmospheric pressure sampling may be performed using a fixed orifice, capillary, or adjustable micrometering valve in lieu of the mass flow controller/vacuum pump arrangement for taking grab samples or short duration time-integrated samples. Usually, the alternative types of flow controllers are appropriate only in situations where screening samples are taken to assess for future sampling activities.

3. SAMPLE PRESERVATION, CONTAINERS, HANDLING, AND STORAGE

After the air sample is collected, the canister valve is closed, an identification tag is attached to the canister, and the canister is transported to a laboratory for analysis. Upon receipt at the laboratory, the canister tag data are recorded. Sample holding times and expiration should be determined prior to initiating field activities.

ED_004144A_00000101-00390

4. INTERFERENCES AND POTENTIAL PROBLEMS

Contamination may occur in the sampling system if canisters are not properly cleaned before use. Additionally, all other sampling equipment (e.g., pump and flow controllers) should be thoroughly cleaned.

5. EQUIPMENT/APPARATUS

The following equipment/apparatus (Appendix A) is required.

5.1 SUBATMOSPHERIC PRESSURE SAMPLING EQUIPMENT

1. ***VOC Canister Sampler***—Whole air sampler capable of filling an initially evacuated canister by action of the flow controlled pump from vacuum to near atmospheric pressure (Andersen Samplers Inc., Model 87-100 or equivalent).

2. ***Sampling Inlet Line***—Stainless steel tubing to connect the sampler to the sample inlet.

3. ***Sample Canister***—Leak-free stainless steel pressure vessels of desired volume with valve and Summa-passivated interior surfaces (Scientific Instrumentation Specialist, Inc., ID 83843, Andersen Samplers, Inc., or equivalent).

4. ***Particulate Matter Filter***—2-micrometer (µm) sintered stainless steel in-line filter (Nupro Co., Model SS-2F-K4-2, or equivalent).

5. ***Chromatographic Grade Stainless Steel Tubing and Fittings***—For interconnections (Alltech Associates, Cat. No. 8125, or equivalent). All materials in contact with sample, analyte, and support gases should be chromatographic grade stainless steel.

6. ***Fixed Orifice, Capillary, or Adjustable Micrometering Valve***—Used in lieu of the electronic flow controller/vacuum pump for grab samples or short duration time-integrated samples.

5.2 PRESSURIZED SAMPLING EQUIPMENT

1. ***VOC Canister Sampler***—Whole air sampler capable of filling an initially evacuated canister by action of the flow controlled pump from vacuum to near atmospheric pressure (Andersen Samplers Inc., Model 87-100).

2. ***Sampling Inlet Line***—Stainless steel tubing to connect the sampler to the sample inlet.

3. ***Sample Canister***—Leak-free stainless steel pressure vessels of desired volume with valve and Summa passivated interior surfaces (Scientific Instrumentation Specialist, Inc., ID 83843, Andersen Samplers, Inc., or equivalent).

ED_004144A_00000101-00391

4. ***Particulate Matter Filter***—2-µm sintered stainless steel in-line filter (Nupro Co., Model SS-2F-K4-2, or equivalent).

5. ***Chromatographic Grade Stainless Steel Tubing and Fittings***—For interconnections (Alltech Associates, Cat. No. 8125, or equivalent). All materials in contact with sample, analyte, and support gases should be chromatographic grade stainless steel.

6. REAGENTS

Not applicable.

7. PROCEDURE

7.1 SUBATMOSPHERIC PRESSURE SAMPLING

7.1.1 Sampling Using a Fixed Orifice, Capillary, or Adjustable Micrometering Valve

1. Prior to sample collection, the appropriate information is completed on the Summa Air Sampling Work Sheet (Appendix B).

2. A canister, which is evacuated to 0.05-millimeter Hg and fitted with a flow restricting device, is opened to the atmosphere containing the VOCs to be sampled.

3. The pressure differential causes the sample to flow into the canister.

4. This technique may be used to collect grab samples (duration of 10-30 seconds) or time-integrated samples (duration of 12-24 hours). The sampling duration depends on the degree to which the flow is restricted.

5. A critical orifice flow restrictor will have a decrease in the flow rate as the pressure approaches atmospheric.

6. Upon sample completion at the location, the appropriate information is recorded on the Summa Air Sampling Work Sheet. VOCs are to be sampled.

7.1.1.1 Sampling Using a Fixed Orifice Valve Summa Canister

1. Before leaving to the field and receiving the sample canister, field personnel will need to verify in the Sampling and Analysis Plan the type of sample or samples to be collected.

2. Before leaving to the field and receiving the sample canister, field personnel will need to verify in the Sampling and Analysis Plan the total amount of time the sample canister will need to be deployed at the sample collection location to collect the actual air sample.

ED_004144A_00000101-00392

3. Before leaving to the field and receiving the sample canister, field personnel will need to contact and verify with the laboratory providing the sample canister that the flow controller and critical orifice provided in the sample canister will allow for the type of sample and the total amount of time needed to collect the sample requested in the Sampling and Analysis Plan.

   Field personnel will also need to ask the laboratory providing the sample canister if the sample canister has a built-in vacuum gauge and if the flow controller has a built-in vacuum gauge. The importance of a vacuum gauge is identified in Steps 5 and 7.

4. Upon receiving the sample canister, field personnel will need to inspect the sample canister shipment and familiarize themselves with the sample canister and equipment associated with the sample canister.

   Typical items associated with a sample canister are: pre-filter, flow controller, flow controller vacuum gauge, sample canister valve, sample canister inlet, sample canister vacuum gauge, brass dust cap, and rain guard.

5. Before sampling is started and equipment is attached to the sample canister, record the sample canister vacuum gauge reading, the canister's serial number, and the flow controller serial number on the appropriate field data form.

   NOTE: There are some instances when a sample canister is not equipped with a built-in sample canister vacuum gauge (Step 7).

6. Attach a string tied sample container tag to the frame of the sample canister. At a minimum, the sample container tag should contain the: sample name, analysis method, sample date, sampler, and sample time.

   NOTE: Do not attach adhesive-type labels to the sample canister.

7. When ready to sample, remove the brass dust cap from the sample canister inlet.

   If a test gauge is to be used to record the sample canister vacuum, attach the gauge to the sample canister inlet and record the sample canister vacuum reading on the appropriate field data form. See Steps 8, 9, and 10 for equipment tightening information.

   In the event a sample canister is not equipped with a built-in vacuum gauge, the laboratory will often provide a flow controller with a built-in vacuum gauge which can be used to record the sample canister vacuum.

8. Connecting equipment/flow controller to the sample canister inlet, tighten the equipment/flow controller fitting nut to the sample canister inlet finger tight, being careful not to cross the threads.

ED_004144A_00000101-00393

To ensure that the equipment/flow controller is being correctly installed onto the sample canister inlet, hold the flow controller and gently rotate the flow controller back and forth while finger tightening the flow controller fitting nut to the sample canister inlet.

9. Once the equipment/flow controller fitting nut is finger tightened to the sample canister inlet and it has been verified that the equipment/flow controller fitting nut threads are aligned properly to the sample canister inlet, using a flat profile wrench (typically a 9/16- or ½-in.), tighten the equipment/flow controller fitting nut.

   DO NOT use adjustable end wrenches or pliers to tighten a fitting nut.

   NOTE: To tighten an equipment/fitting nut, a 1/8 in. should be sufficient. DO NOT over-tighten any equipment/fitting connections. Over-tightening will cause leaks.

   IMPORTANT: DO NOT use Teflon™ tape or other sealants on any equipment/fitting threads; they are not necessary.

10. To begin sampling, open the sample canister valve by turning it counter-clockwise one full turn.

    NOTE: Canister valves can be of two types: rotary and toggle.

    Record the start time and the initial sample canister vacuum gauge reading on the appropriate field data form.

11. Field personnel need to periodically check the sample canister vacuum gauge throughout the sampling period to ensure that sufficient vacuum remains in the sample canister for the time the sample canister will need to be deployed to collect the sample.

12. Once the sampling period is complete, close the sample canister valve finger tight or snug. DO NOT over-tighten the sample canister valve as this may possibly damage the sample canister valve.

    NOTE: It is preferable to stop the sampling period when the sample canister vacuum gauge reads -5" Hg. Allowing the sampling period to extend past -5" Hg may possibly result in an unusable sample.

13. Record the stop time and the ending sample canister vacuum gauge reading on the appropriate field data form.

14. Disassemble the equipment/flow controller in reverse order of the above assembly instructions. Return all equipment/flow controller to the original packaging material and shipping container in the manner in which they were received.

ED_004144A_00000101-00394

15. Complete the chain-of-custody form, ensuring all fields are entered, repackage the sample canister and its associated equipment in the original shipping container, secure the outside of the shipping container with custody seals to ensure the integrity of the sample canister, and return the sample canister to the procured laboratory.

7.1.2 Sampling Using a Mass Flow Controller/Vacuum Pump Arrangement (Andersen Sampler Model 87-100)

1. Prior to sample collection, the appropriate information is completed on the Summa Air Sampling Work Sheet (Appendix B).

2. A canister is connected in line with the sampler and is opened to the atmosphere containing the VOCs to be sampled.
3. A whole air sample is drawn into the system through a stainless steel inlet tube by a direct drive blower motor assembly.

4. A small portion of this whole air sample is pulled from the inlet tube by a specially modified inert vacuum pump in conjunction with a mass flow controller.

5. The initially evacuated canister is filled by action of the flow controlled pump to near atmospheric pressure.

6. A digital time-program is used to pre-select sample duration and start and stop times.

7. Upon sample completion at the location, the appropriate information is recorded on the Canister Sampling Field Data Sheet.

7.2 PRESSURIZED SAMPLING

7.2.1 Sampling Using a Mass Flow Controller/Vacuum Pump Arrangement (Anderson Sampler Model 87-100)

1. Prior to sample commencement at the location, the appropriate information is completed on the Canister Sampling Field Data Sheet.

2. A canister is connected in line with the sampler and is opened to the atmosphere.

3. A whole air sample is drawn into the system through a stainless steel inlet tube by a direct drive blower motor assembly.

4. A small portion of this whole air sample is pulled from the inlet tube by a specially modified inert vacuum pump in conjunction with a mass flow controller.

5. The initially evacuated canister is filled by action of the flow controlled pump to a positive pressure not to exceed 25 pounds per square inch gauge.

ED_004144A_00000101-00395

6. A digital time-programmer is used to pre-select sample duration and start and stop times.

7. Upon sample completion at the location, the appropriate information is recorded on the Canister Sampling Field Data Sheet.

8. CALCULATIONS

A flow control device is chosen to maintain a constant flow into the canister over the desired sample period. This flow rate is determined for the canister and is filled to approximately 88.1 kPa for subatmospheric pressure sampling or to approximately one atmosphere above ambient pressure for pressurized sampling over the desired sample period. The flow rate can be calculated by:

$$F = \frac{(P)(V)}{(T)(60)}$$

where

F = Flow rate (cm^3/min)
P = Final canister pressure, atmospheres absolute
V = Volume of the canister (cm^3)
T = Sample period (hours).

For example, if a 6-liter canister is to be filled to 202-kPa (two atmospheres) absolute pressure in 24 hours, the flow rate can be calculated by:

$$F = \frac{(2)(6000)}{(24)(60)} * 8.3 cm^3/min$$

If the canister pressure is increased, a dilution factor is calculated and recorded on the sampling data sheet.

where

$$\text{Dilution Factor} = \frac{Ya}{Xa}$$

Xa = Canister pressure (kPa, pounds per square inch absolute) absolute before dilution.
Ya = Canister pressure (kPa, pounds per square inch absolute) absolute after dilution.

After sample analysis, detected VOC concentrations are multiplied by the dilution factor to determine concentration in the sampled air.

ED_004144A_00000101-00396

9. QUALITY ASSURANCE/QUALITY CONTROL

The following general quality assurance procedures apply (VIP-8, U.S. Environmental Protection Agency 600/9-87-010):

1. Data must be documented on standard volume sets when sampling ambient air: chain-of-custody records, field data sheets, or using solid adsorbents (atmospheric site logbooks. Environ. 18:855-859, 1984).

2. All instrumentation must be operated in accordance with operating instructions as supplied by the manufacturer, unless otherwise specified in the Work Plan. Equipment checkout and calibration activities must occur prior to sampling/operation, and must be documented.

3. Duplicates, replicates, or other quality assurance/quality control samples may be collected as appropriate or as defined in project-specific Work Plans and Quality Assurance Project Plans.

10. DATA VALIDATION

Not applicable.

11. SAFETY AND HEALTH

When working with potentially hazardous materials, follow U.S. Environmental Protection Agency, Occupational Safety and Health Administration, and Corporate safety and health practices. Specifically, pressurization of Summa canisters should be performed in a well ventilated room, or preferably under a fume hood. Care must be taken not to exceed 40 pounds per square inch in the canisters. Canisters are under pressure, albeit only 20-30 pounds per square inch, and should not be dented or punctured. They should be stored in a cool dry place and always be placed in their plastic shipping boxes during transport and storage.

12. REFERENCES

McClenny, W.A., J.D. Pleil, T.A. Lumpkin, and K.D. Oliver. 1987. Update on Canister-Based Samplers for VOCs. Proceedings of the 1987 EPA/APCA Symposium on Measurement of Toxic and Related Air Pollutants. May. APCA Publication.

Riggin, R.M. 1983. Technical Assistance Document for Sampling and Analysis of Toxic Organic Compounds in Ambient Air. EPA-600/4-83-027. U.S. Environmental Protection Agency, Research. Triangle Park, North Carolina.

ED_004144A_00000101-00397

Walling, J.F. 1986. The Utility of Distributed Air Monitoring VOC Sources. EPA-340/1-88-015, U.S. Environmental Protection Agency, Office of Air Quality Planning and Standards. Washington, D.C. June.

ED_004144A_00000101-00398

Appendix A

Equipment/Apparatus

ED_004144A_00000101-00399

This page intentionally left blank

ED_004144A_00000101-00400

Appendix A

Subatmospheric/Pressurized Sampling Equipment

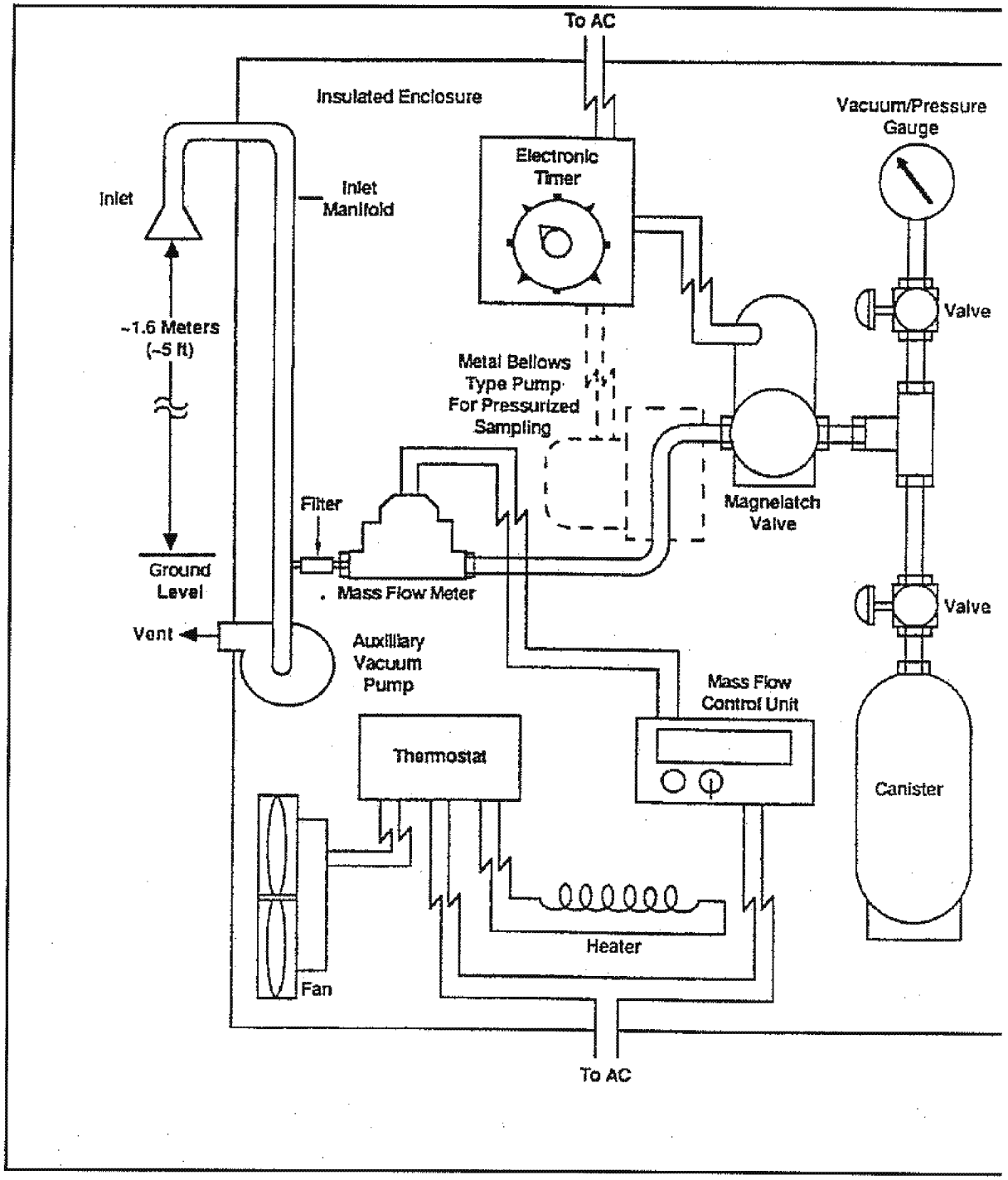

ED_004144A_00000101-00401

This page intentionally left blank

ED_004144A_00000101-00402

Appendix B

Summa Air Sampling Work Sheet

ED_004144A_00000101-00403

This page intentionally left blank

ED_004144A_00000101-00404

APPENDIX B

SUMMA AIR SAMPLING WORKSHEET

Site:		**Site No.:**	
Samplers:		**Work Assignment Manager:**	
Date:		**Project Leader:**	

Sample No.					
Location:					
Summa ID					
Orifice Used					
Analysis/Method					
Time (Start)					
Time (Stop)					
Total Time					
SUMMA WENT TO AMBIENT	**Yes/No**	**Yes/No**	**Yes/No**	**Yes/No**	**Yes/No**
Pressure Gauge					
Pressure Gauge					
Flow Rate (Pre)					
Flow Rate (Post)					
Flow Rate (Avg.)					
MET Station Onsite: Yes/No					

General Comments:

ED_004144A_00000101-00405

This page intentionally left blank

ED_004144A_00000101-00406

Standard Operating Procedure No. 007
for
Surface Water Sampling

Prepared by

EA Engineering, Science, and Technology, Inc., PBC
225 Schilling Circle, Suite 400
Hunt Valley, Maryland 21031

Revision: 1
December 2014

This page intentionally left blank

CONTENTS

Page

1. SCOPE AND APPLICATION 1
2. MATERIALS 1
3. PROCEDURE 1
4. MAINTENANCE 4
5. PRECAUTIONS 4
6. REFERENCES 4

ED_004144A_00000101-00409

This page intentionally left blank

ED_004144A_00000101-00410

1. SCOPE AND APPLICATION

The purpose of this Standard Operating Procedure (SOP) is to delineate protocols for sampling surface water. This procedure can be applied to the collection of surface water samples from marine and estuarine systems, streams, rivers, ditches, lakes, ponds, and lagoons. Surface water samples provide an indication of the amount of contaminant in the surface water. It is, therefore, important to collect a representative sample.

2. MATERIALS

The following materials may be required:

0.45-μ disposable filters	Sample bottles
Cooler with ice	Short-handled dip sampler (PTFE or stainless steel)
Long-handled dip sampler (polytetrafluoroethelyne [PTFE] or stainless steel)	Stainless steel or PTFE-lined bucket
Peristaltic pump with 0.45-μM filters and disposable Tygon tubing	Niskin bottle (or similar sampling device)

3. PROCEDURE

For all surface water samples, use a Global Positioning System to record sampling coordinates and mark the sampling locations on a site map. Photograph (if cameras are allowed onsite) and describe each location, place a numbered stake above the visible high water mark on the bank closest to the sampling location, and/or mark adjacent trees with surveyor's flagging. The photographs and descriptions must be adequate to allow the sampling station to be relocated at some future date by someone other than the original sampling crew. Use a long-handled dip sampler where access is poor or non-contact with water is suggested in the Health and Safety Plan.

Sampling should be performed deliberately and methodically to minimize disturbance of bottom sediments, yet as quickly as possible to ensure a representative sample. If wading in a stream, sample downstream of the sampling location to prevent disturbance of the bottom. To prevent contamination of the exterior of the sample container, and/or potential contamination of the surface water sample by laboratory contaminants on the exterior of the bottle, the sample container should never be dipped into the water, rather a decontaminated sampling device should be used to collect unfiltered samples.

Sampling with the PTFE or stainless steel sampler (long-handled or measuring cup-type):

- Remove the cap from the sample bottle.
- Dip a sample of surface water using the sampler.

ED_004144A_00000101-00411

- Tilt sample bottle and gently pour sample from sampler into the bottle. Allow the sample to trickle down the side of the bottle. Avoid aerating the sample.

- Add preservative as required by SOP No. 039. Replace cap, and place in cooler immediately.

Sampling with stainless steel or PTFE-lined bucket:

- Remove cap from sample bottle.

- Gently dip collection bucket in the water. Fill bucket and carefully lift from water body.

- Tilt sample bottle and gently pour sample from sampler into the bottle. Allow the sample to trickle down the side of the bottle. Avoid aerating the sample.

- Add preservative as specified by the project-specific Sampling and Analysis Plan. Replace cap, and place in cooler immediately.

– OR –

- Use smaller sampling cup to transfer sample from bucket to sample bottle as described above.

Sampling with a Niskin bottle (or similar device):

- Prepare the bottle for deployment by placing the ends of the bottle in the open position and lock the ends into the trigger mechanism.

- Lower the bottle to desired depth of sampling (on either a wire cable or rope).

- Place a messenger (triggering device) on the cable/rope and deploy by allowing free-fall down the cable/rope.

- Bring the bottle back to the surface and pour sample into a sample container.

Sampling with a peristaltic pump and Tygon tubing:

- Cut a length of Tygon tubing to the depth of sampling specified by the client or project-specific Sampling and Analysis Plan.

- Insert one end of the tubing into the intake hose on the peristaltic pump.

- Place a weight on the tubing and lower to the specified depth;

- Cut a length of tubing and insert into the output (out-flow) hose on the peristaltic pump.

ED_004144A_00000101-00412

- After applying power to the peristaltic pump, proceed to pump site water through the tubing apparatus. Approximately five times the hose volume should be pumped through the tubing before sampling.

- Fill the required sample containers.

- If filtering is required, obtain filtered sample by placing a 0.45-μM in-line filter on the end of the output tube and fill the required sample containers.

Both filtered and unfiltered samples may be required for metals analyses. Bulk samples for filtration will be collected using the stainless steel or PTFE-lined bucket method described above. Sample filtration must be performed immediately upon retrieval of the bulk sample as follows.

Filtration will be performed immediately after collecting sample. Set up filtration equipment prior to collecting sample. Filtration may be accomplished by gravity or, if necessary due to slow filtering, a peristaltic pump will be used to pressure filter the sample. Vacuum filtration will not be used due to the possibility of analyte volatilization.

Gravity filtration will be accomplished as follows:

- Using decontaminated forceps, place a 0.45-μM membrane in a decontaminated filter funnel.

- Slowly pour sample into the funnel and collect filtrate directly into appropriate sample container(s).

- Add preservative(s) as required by project-specific Sampling and Analysis Plan. Immediately cap container and place in cooler.

- Dispose of filter membrane.

Pressure filtration will be accomplished as follows:

- Using previously assembled disposable tubing, 45-μ in-line filter, and peristaltic pump, filter sample from collection bucket into appropriate container.

- Adjust pump rate to avoid aeration of sample.

- Fill container, preserve as indicated in SOP No. 039, immediately cap container, and place in cooler.

- Dispose of filter and tubing.

Refer to SOP Nos. 001, 002, 004, 005, 016, and 039.

ED_004144A_00000101-00413

4. MAINTENANCE

Refer to manufacturer's specifications for maintenance procedures on generators and pumps.

5. PRECAUTIONS

Avoid disturbing bottom sediments.

Consult the Health and Safety Plan prior to collecting any samples for personal protective equipment such as dermal and respiratory protection and personal flotation devices when sampling in or near deep water or from boats.

Always decontaminate the sampling and filtration equipment, and change gloves between sampling locations to minimize the risk of cross-contamination.

Always set up generators downwind of working area. Never service generators onsite.

6. REFERENCES

None.

ED_004144A_00000101-00414

Standard Operating Procedure No. 008
for
pH Measurement

Prepared by

EA Engineering, Science, and Technology, Inc., PBC
225 Schilling Circle, Suite 400
Hunt Valley, Maryland 21031

Revision 0
December 2014

This page intentionally left blank

CONTENTS

Page

1. SCOPE AND APPLICATION 1

2. MATERIALS 1

3. PROCEDURE 1

   3.1 Calibration Check 1
   3.2 pH Measurements 2

4. MAINTENANCE 3

5. PRECAUTIONS 3

6. REFERENCES 3

ED_004144A_00000101-00417

This page intentionally left blank

ED_004144A_00000101-00418

1. SCOPE AND APPLICATION

The purpose of this Standard Operating Procedure (SOP) is to delineate protocols for measuring the pH of all types of aqueous solutions, including drinking water, saline water, and industrial and domestic wastes. As a measure of the hydrogen ion content of a solution, pH gives a general indication of the acidity or alkalinity of a water sample.

Use of brand names in this SOP is not intended as endorsement or mandate that a given brand be used. Alternate equivalent brands of detectors, sensors, meters, etc. are acceptable. If alternate equipment is to be used, the contractor will provide applicable and comparable SOPs for the maintenance and calibration of same.

2. MATERIALS

The following materials may be required:

Φ ® 12 pH Meter
Automatic temperature compensator (ATC) probe
Beakers
Combination (pH) electrode
Commercial buffer solutions (standards) of pH 4.00, 7.00, and 10.00
HPLC-grade water
Laboratory wipes for blotting electrodes
Wash bottle

3. PROCEDURE

3.1 CALIBRATION CHECK

Calibration of the pH meter will be checked on a daily basis. A two-point calibration should be used as follows:

1. Prepare beakers of buffer solutions of pH 4.00, 7.00, and 10.00.
2. Calibration should closely bracket the expected pH range of the samples to be taken.
3. Turn on instrument, clear instrument.
4. Rinse the electrode with distilled water and blot excess.
5. Immerse probes in beaker of pH 4.00 or 7.00 standard, swirl gently.
6. Press pH key, then STD key.

ED_004144A_00000101-00419

7. Keep the probes in the sample until the reading stabilizes. The reading should be the pH of the standard.

8. Rinse the electrode with distilled water and blot excess.

9. Repeat the procedure with pH 7.00 and 10.00 standards.

10. Record the initial readings.

11. If the measured values vary from the expected value by greater than 0.2 pH units, recalibrate the instrument with fresh aliquots of buffer solution. If the discrepancy persists, alert the Field Operations Leader, who has the option of trying to fix the meter or obtaining a second pH meter.

12. Record all measurements in the field logbook.

13. Verify calibration by reading the pH of the third buffer solution.

14. Refer to SOP No. 016.

3.2 pH MEASUREMENTS

Measurements of pH will be taken using the two-point standardization method as follows:

1. Connect the ATC and pH electrodes to the appropriate inputs.

2. Turn on instrument, clear instrument.

3. Prepare two small beakers of standard buffer solutions. Ideally, the pH values of these standards will "bracket" the expected pH value of the sample and be as close as possible to the pH of the sample.

4. Rinse a small beaker with distilled water, then sample water. Fill the beaker with sample water.

5. Rinse the probes with distilled water. Blot excess.

6. Immerse electrode and ATC in first standard. Swirl gently. Press pH key and STD key. Wait for display to stop flashing.

7. Rinse the probes with distilled water. Blot excess.

8. Immerse electrode and ATC in second standard. Swirl gently. Press STD key. Wait for display to stop flashing.

ED_004144A_00000101-00420

9. Rinse the probes with distilled water. Blot excess.

10. Immerse the probes in the sample and swirl gently, keeping the probes in the sample until the display stops flashing.

11. Record the sample pH and temperature after stabilization. Note any problems such as meter drift.

12. Rinse the probes with distilled water. Blot excess.

13. Repeat Steps 9 through 12 for additional samples.

Decontaminate probe according to manufacturer's specifications.

Decontaminate beakers according to SOP No. 005, Section 3.3.1.4 (Labware).

4. MAINTENANCE

The following steps will be taken to maintain the pH meter:

1. Check the batteries each time the meter is used.

2. Keep the probe stored in a 0.1 M KCl solution adjusted to pH 4 when the meter is not in use. Alternatively, the electrode may be rinsed with deionized water and the protective cap put on, trapping any residual water inside it (do not blot the electrode dry prior to putting the cap on).

5. PRECAUTIONS

Remove coatings of oil material or particulate matter that can impair electrode response by gentle wiping or detergent washing, followed by distilled water rinsing.

As noted in Section 1, these procedures may not apply to alternate manufacturer's equipment.

Calibration is always performed using the pH 7.00 and one end point (pH4.00 or 11.00) standard. **Never** calibrate the instrument using two end points only.

6. REFERENCES

Beckman Instruments, Inc. Users Manual for Φ® 10 pH Meter, Φ® 11 pH meter, and Φ® 12 pH/ISE Meter.

ED_004144A_00000101-00421

Franston, M.H. et al. (eds). 1981. Standard Methods for the Examination of Water and Wastewater, 15th Edition. American Public Health Association, American Water Works Association and Water Pollution Control Federation.

U.S. Environmental Protection Agency. 1983. Methods for Chemical Analysis of Water and Wastes. March.

ED_004144A_00000101-00422

Standard Operating Procedure No. 009
for
Temperature Measurement

Prepared by

EA Engineering, Science, and Technology, Inc., PBC
225 Schilling Circle, Suite 400
Hunt Valley, Maryland 21031

Revision 0
December 2014

This page intentionally left blank

CONTENTS

Page

1. SCOPE AND APPLICATION 1
2. MATERIALS 1
3. PROCEDURE 1
4. MAINTENANCE 1
5. PRECAUTIONS 1
6. REFERENCES 1

ED_004144A_00000101-00425

This page intentionally left blank

ED_004144A_00000101-00426

1. SCOPE AND APPLICATION

The purpose of this Standard Operating Procedure (SOP) is to delineate protocols for measuring the temperature of a solid or liquid sample, in particular, for measuring water temperature. Groundwater temperature does not vary dramatically over the course of a year. Therefore, groundwater temperature can be used to help identify an aquifer, identify stream reaches where groundwater inflow is occurring, identify thermal gradients in lakes or ponds, and also indicate when sufficient water has been removed from a well during purging.

2. MATERIALS

The following materials may be required: digital reading thermocouple thermometer in combination meter or in a stick. Accuracy = ±0.5°C.

3. PROCEDURE

Rinse the probe with distilled water. Insert the probe into the sample, and leave it in the sample until the temperature stabilizes. Record the temperature reading, being sure to indicate °C or °F. Decontaminate the probe according to Section 3.3 of SOP No. 005 (Field Decontamination).

Refer to SOP Nos. 005 and 016.

NOTE: °C = (°F - 32) (5/9)
°F = ([9/5]°C) + 32.

4. MAINTENANCE

Not applicable.

5. PRECAUTIONS

None.

6. REFERENCES

U.S. Environmental Protection Agency. 1983. Methods for Chemical Analysis of Water and Wastes. March.

ED_004144A_00000101-00427

This page intentionally left blank

ED_004144A_00000101-00428

Standard Operating Procedure No. 010
for
Water Level and
Well Depth Measurements

Prepared by

EA Engineering, Science, and Technology, Inc., PBC
225 Schilling Circle, Suite 400
Hunt Valley, Maryland 21031

Revision 0
December 2014

This page intentionally left blank

CONTENTS

Page

1. SCOPE AND APPLICATION 1

2. MATERIALS 1

3. PROCEDURE 1

   3.1 Preliminary Steps 1
   3.2 Operation 1
   3.3 Data Recording and Manipulation 4

4. CALIBRATION 4

5. PRECAUTIONS 4

6. REFERENCES 4

ED_004144A_00000101-00431

This page intentionally left blank

ED_004144A_00000101-00432

1. SCOPE AND APPLICATION

The purpose of this Standard Operating Procedure (SOP) is to delineate protocols for measuring water level and well depth. This procedure is applicable to the sampling of monitoring wells and must be performed prior to any activities which may disturb the water level, such as purging or aquifer testing.

2. MATERIALS

The following materials may be required:

Electric water level indicator (dipmeter) with cable measured at 0.01-ft increments OR weighted steel tape and chalk OR transducer and datalogger
Oil/water interface probe
Plastic sheeting
Photoionization detector or intrinsically safe flame ionization detector

3. PROCEDURE

3.1 PRELIMINARY STEPS

Locate the well and verify its position on the site map. Record whether positive identification was obtained, including the well number and any identifying marks or codes contained on the well casing or protective casing. Gain access to the top of the well casing.

Locate the permanent reference mark at the top of the casing. This reference point will be scribed, notched, or otherwise noted on the top of the casing. If no such marks are present, measure to the top of the highest point of the well casing and so note this fact in the field logbook. Determine from the records and record in the notebook the elevation of this point.

Record any observations and remarks regarding the completion characteristics and well condition, such as evidence of cracked casing or surface seals, security of the well (locked cap), and evidence of tampering.

Keep all equipment and supplies protected from gross contamination; use clean plastic sheeting. Keep the water level indicator probe in its protective case when not in use.

3.2 OPERATION

Sample the air in the well head for gross organic vapors by lifting the well cap only high enough for an organic vapor meter (photoionization detector or flame ionization detector) probe to be entered into the well casing. This will indicate the presence of gross volatile contaminants as well as indicating potential sampler exposure.

ED_004144A_00000101-00433

Remove cap. Allow well to vent for 60-90 seconds. Resample headspace. Record both readings. If the second reading is lower than the first, use the second reading to determining whether respiratory protection will be required during subsequent water level and well depth determinations, and sampling.

Note that all headspace sampling must be performed at arm's length and from the upwind side of the well if possible.

Refer to SOP Nos. 011, 023, or 024 as appropriate.

If non-aqueous phase liquid (NAPL) contamination is suspected[1], use an interface probe to determine the existence and thickness of NAPLs.

Open the probe housing, turn the probe on, and test the alarm. Slowly lower the probe into the well until the alarm sounds. A continuous alarm indicates a NAPL while an intermittent alarm indicates water. If a NAPL is detected, record the initial level (first alarm). Mark the spot by grasping the cable with the thumb and forefingers at the top of the casing. If a mark is present on the casing, use the mark as the reference point. If no mark is present, use the highest point on the casing as the reference point. Withdraw the cable sufficiently to record the depth.

Continue to slowly lower the probe until it passes into the water phase. Slowly retract the probe until the NAPL alarm sounds and record that level in the manner as described above.

Record the thickness of the light NAPL[2] (Section 3.3).

Continue to slowly lower the interface probe through the water column to check for the presence of dense NAPL.

Measure and record the thickness of the dense NAPL layer (if any) as described above.

Slowly raise the interface probe, recording the depth to each interface as the probe is withdrawn. If there is a discrepancy in depths, clean the probe sensors and re-check the depths.

NOTE: Air/liquid interface depth is more reliable if probe is lowered into liquid. NAPL/water depths are more accurate if probe is moved from water into NAPL.

Always lower and raise interface probe slowly to prevent undue mixing of media.

---

1. Interface probes will be used in all wells for first round sampling, regardless of site history. If no NAPLs are detected during the first round of sampling, this step may be omitted during subsequent sampling events **unless** conditions such as site history or headspace vapors would indicate otherwise.
2. If NAPL is viscous, such as coal tar or weather bunker oil, several confirmation measurements should be made after decontamination of the probe to verify that the NAPL is not sticking to the probe and causing erroneous readings. One way to accomplish this would be to partially fill a 5-gal bucket with water and dip the probe to ensure that decontamination has effectively removed the NAPL.

ED_004144A_00000101-00434

Always perform NAPL check in wells installed in areas with suspected NAPL contamination. Always perform NAPL check if headspace test reveals presence of volatiles. Always perform NAPL check the first time a well is sampled. **If** a well has been sampled previously **and** no NAPLs were present **and** none of the preceding conditions are met, the NAPL check may be omitted.

If no NAPL is present, use an electronic water level detector as follows:

- Remove the water level indicator probe from the case, turn on the sounder, and test check the battery and sensitivity scale by pushing the red button. Adjust the sensitivity scale until you can hear the buzzer.

- Slowly lower the probe and cable into the well, allowing the cable reel to unwind. Continue lowering until the meter buzzes. Very slowly, raise and lower the probe until the point is reached where the meter **just** buzzes. Marking the spot by grasping the cable with the thumb and forefingers at the top of the casing. If a mark is present on the casing, use the mark as the reference point. If no mark is present, use the highest point on the casing as the reference point. Withdraw the cable and record the depth.

Alternatively use a steel tape with an attached weight if aquifer gradients are lower than 0.05 ft/ft. Due to the possibility of adding unknown contaminants from chalk colorants, only white chalk is permitted.

Rub chalk onto the first 1 ft of the steel tape and slowly lower the chalked end into the well until the weighted end is below the water surface. (A small splash can be heard when the weighted end hits the water surface.)

Using the method described above read and record the length from the steel tape.

Remove the steel tape. The chalk will be wet or absent where the tape was below the water surface. Locate, read, and record this length. Subtract wetted length from total length and record the difference. This is the depth to water table.

Transducers and dataloggers will be used where water level fluctuations over time are to be measured, such as tidal fluctuation studies (SOP No. 045) and aquifer (hydraulic) tests (SOP No. 033). Note that transducers are inappropriate for measuring well depth.

Slowly lower the transducer into the well until it is below the lowest possible piezometric level (typically 2-3 ft below the water table).

Tape the umbilical to the protective casing to prevent the transducer from falling further.

Attach the umbilical leads to the datalogger.

Turn datalogger on.

ED_004144A_00000101-00435

To measure the well depth, lower electric water level indicator probe or tape until slack is noted. Very slowly raise and lower the cable until the exact bottom of the well is "felt." Measure (cable) or read the length (tape) and record the depth.

Note that if the electric water level indicator is used to determine depth of well, the offset distance between the tip of the probe and the electrode must be added to the reading to determine actual depth.

Withdraw the probe or tape. Decontaminate the probe(s) and cable(s).

3.3 DATA RECORDING AND MANIPULATION

Record the following computations:

- Date and time
- Weather
- Method of measurement
- Casing elevation
- NAPL surface elevation = casing elevation – depth to NAPL
- NAPL thickness = depth to bottom of NAPL – depth to top of NAPL
- Water level elevation = casing elevation – depth to water
- Well bottom elevation = casing elevation – depth to bottom (or read directly from tape).

Refer to SOP Nos. 005 and 016.

4. CALIBRATION

No calibration is needed.

5. PRECAUTIONS

Depending upon the device used, correction factors may be required for some measurements. Check instrument batteries prior to each use. Exercise care not to break the seals at the top of the electric water level indicator probe.

6. REFERENCES

McAlary, T.A. and J.F. Barker. 1987. Volatilization Losses of Organics during Groundwater Sampling from Low Permeability Materials in Groundwater Monitoring Review. Fall.

Thornhill, J.T. 1989. Accuracy of Depth to Groundwater Measurements in U.S. Environmental Protection Agency Superfund Groundwater Issue EPA/540/4-89/002.

ED_004144A_00000101-00436

Standard Operating Procedure No. 011
for
Photoionization Detector

Prepared by

EA Engineering, Science, and Technology, Inc., PBC
225 Schilling Circle, Suite 400
Hunt Valley, Maryland 21031

Revision 0
December 2014

This page intentionally left blank

CONTENTS

Page

1. SCOPE AND APPLICATION 1
2. MATERIALS 1
3. STARTUP/CALIBRATION PROCEDURE 1
4. BATTERY CHARGING 2
5. PRECAUTIONS 2
6. REFERENCES 2

ED_004144A_00000101-00439

This page intentionally left blank

ED_004144A_00000101-00440

1. SCOPE AND APPLICATION

The purpose of this Standard Operating Procedure (SOP) is to delineate protocols for field operations with the photoionization detector (MiniRae). The photoionization detector uses an ultraviolet emitting lamp designed to detect, measure, and display the total concentration of airborne ionizable gases and vapors. This information is used to determine control measures such as protection and action levels.

Use of brand names in this SOP is not intended as endorsement or mandate that a given brand be used. Alternate equivalent brands of detectors, sensors, meters, etc. are acceptable. If alternate equipment is to be used, the contractor will provide applicable and comparable SOPs for the maintenance and calibration of same.

2. MATERIALS

The following materials may be required:

Battery pack	Tedlar bag
Calibration gas (100 ppm isobutylene)	Tygon tubing
Microtip/MiniRae	Regulator

3. STARTUP/CALIBRATION PROCEDURE

Turn the instrument on by pressing the back of the power switch located on the handle of the instrument.

The message "Warming up now, please wait" will be displayed for up to 3 minutes. After normal display appears, the instrument is ready for calibration.

Fill a Tedlar bag with the desired calibration gas (usually 100 ppm Isobutylene).

Press SETUP button and select the desired Cal Memory using the arrow keys (normally set to 200 ppm). Press EXIT button to leave setup function.

Press CAL button and expose instrument to Zero Gas. (Usually clean outdoor air will be suitable. If any doubt exists as to the cleanliness of the background air a commercial source of zero gas should be used.)

The instrument then asks for the Span Gas concentration. Enter the known span gas concentration and then connect the Tedlar bag containing the Span Gas.

ED_004144A_00000101-00441

NOTE: The span gas concentration is dependent upon both the concentration of the span gas used and the rating of the UV lamp in the instrument at time of calibration. If using 100 ppm isobutylene and the standard 10.6 eV lamp, the span gas concentration will be 56 ppm.

Press enter and the instrument sets its sensitivity. Once the display reverts to normal, the instrument is calibrated and ready for use. Remove the Span Gas from the inlet probe. The instrument should be calibrated at least once a day.

4. BATTERY CHARGING

Ensure instrument is off. Set the voltage selector switch on the bottom of the battery charger to the appropriate AC line voltage. Press the release button on the bottom of the instrument and remove the battery pack by sliding it backwards. Plug charger into the battery pack and then into an AC outlet and allow the battery to charge for at least 8 hours. After charging, remove the charger, first from the outlet then from the battery pack, and slide the battery pack back onto the instrument.

5. PRECAUTIONS

Instrument does not carry an Intrinsic Safety Rating and must not be used in a hazardous location where flammable concentrations of gases or vapors are constantly present.

All calibration, maintenance, and servicing of this device, including battery charging, must be performed in a safe area away from hazardous locations.

Do not open or mutilate battery cells. Do not defeat proper polarity orientation between the battery pack and battery charger. Substitution of components may affect safety rating.

6. REFERENCES

Instrument User's Manual.

ED_004144A_00000101-00442

Standard Operating Procedure No. 012
for
Specific Conductance Measurements

Prepared by

EA Engineering, Science, and Technology, Inc., PBC
225 Schilling Circle, Suite 400
Hunt Valley, Maryland 21031

Revision 0
December 2014

This page intentionally left blank

CONTENTS

Page

1. SCOPE AND APPLICATION 1

2. MATERIALS 1

3. PROCEDURE 1

   3.1 Calibration 1
   3.2 Operation 2

4. MAINTENANCE 2

5. PRECAUTIONS 3

6. REFERENCES 3

ED_004144A_00000101-00445

This page intentionally left blank

ED_004144A_00000101-00446

1. SCOPE AND APPLICATION

The purpose of this Standard Operating Procedure (SOP) is to delineate protocols for measuring the specific conductance of any aqueous solution, including drinking water, saline water, and industrial and domestic wastes. Conductivity is the ability of an aqueous solution to pass an electrical current. The current is primarily carried by dissolved inorganic ions such as chlorides, nitrates, sulfates, along with cations such as sodium, calcium, magnesium and others. Organic compounds do not carry current and, therefore, have almost no conductivity.

2. MATERIALS

The following materials may be required:

Conductivity meter with integral temperature compensation; accuracy = ±2 percent at 25°C (77°F)
Conductivity cell
Appropriate conductivity reference solution
High performance liquid chromatography (HPLC)-grade water (see SOP No. 005, Footnote 2)
Thermometer (optional, Section 5)

3. PROCEDURE

3.1 CALIBRATION

The specific conductivity meter should be calibrated at the beginning of each day[1] as follows:

1. Thoroughly rinse the probe with appropriate conductivity reference solution.
2. Zero meter if appropriate.
3. Measure the specific conductance of fresh appropriate conductivity reference solution record it in the field notebook, and adjust the calibration knob until the meter reads properly.
4. Rinse probe with HPLC-grade water.
5. Measure the specific conductance of HPLC-grade water and record in the field logbook. If specific conductivity of HPLC-grade water is not 0 (±2 percent) recalibrate instrument.

1. The meter should be recalibrated any time the readings are suspect (e.g., out of expected range).

ED_004144A_00000101-00447

3.2 OPERATION

The specific conductivity meter will be operated as follows:

1. Thoroughly rinse the probe and sample beaker with sample water.

2. Measure the temperature of the sample water. Convert Fahrenheit temperature readings to Celsius using C = 5/9(F - 32) if Celsius temperature is not obtained directly.

3. Place the probe in the sample beaker with sufficient sample to completely submerge the probe. Swirl the probe to remove any air bubbles trapped in the probe.

4. Select the highest multiplier scale on the meter and turn the instrument on. Progressively use lower multiplier scales until a mid-scale deflection is obtained.

5. If appropriate, check probe accuracy by pressing cell test button. If value change is >10 percent check probe.

6. Record the temperature and conductivity values.

7. Specific conductivity values are corrected for temperature using:

   K^25^oC = {*K measured*} over {1+ 0.0191 (t-25)}

   where

   K = Conductivity in µmhos
   t = Temperature, °C

8. Decontaminate the probe (see SOP No. 005, Section 3.3.3).

Refer to SOP Nos. 005 and 016.

4. MAINTENANCE

The following steps will be taken to properly maintain the conductivity meter:

1. Check the batteries each time the instrument is used.

2. Inspect the probe on a daily basis for damage or loss of platinum black plating from the electrode. If the platinum is damaged, alert the Field Team Leader and arrange to get a new cell.

3. Follow manufacturer's specifications regarding storage of probe between uses.

ED_004144A_00000101-00448

5. PRECAUTIONS

Be certain there is no air in the cell before taking a reading. If conductivity meter does not have integral temperature compensation, use a thermometer to determine temperature of the sample.

6. REFERENCES

Manufacturer's Manual.

U.S. Environmental Protection Agency. 1983. Methods for Chemical Analysis of Water and Wastes. March.

ED_004144A_00000101-00449

This page intentionally left blank

ED_004144A_00000101-00450

Standard Operating Procedure No. 013
for
Collection of Monitoring Well Samples

Prepared by

EA Engineering, Science, and Technology, Inc., PBC
225 Schilling Circle, Suite 400
Hunt Valley, Maryland 21031

Revision 0
December 2014

This page intentionally left blank

CONTENTS

Page

1. SCOPE AND APPLICATION 1

2. MATERIALS 1

3. PROCEDURE 1

   3.1 General 1
   3.2 General Rules for Groundwater Field Parameter Logbook 2
   3.3 Groundwater Sampling General Rules 2
   3.4 Sampling of Non-Aqueous Phase Liquids 4
   3.5 Well Purging General Rules 5
   3.6 Purging and Sampling with Bailers 6
   3.7 Purging with Pump, Sampling with Bailer 8
   3.8 Purging and Sampling with Low-Flow Pump 9

4. MAINTENANCE 10

5. PRECAUTIONS 10

6. REFERENCES 10

ED_004144A_00000101-00453

This page intentionally left blank

ED_004144A_00000101-00454

1. SCOPE AND APPLICATION

The purpose of this Standard Operating Procedure is to delineate protocols for the collection of groundwater samples from monitoring wells.

2. MATERIALS

The following materials may be required:

0.45 μM filters	Polyvinyl chloride bailer (for purging only)
Bladder pump (dedicated to one well only)	Sample bottles and labels
Conductivity meter	Stainless steel bailer (for purging and sampling)
Dissolved oxygen meter	Submersible pump and hose (for purging only)
Generator	Thermometer (optional)[1]
Logbook or book of field parameter forms	Transparent bailer with a double check valve
Peristaltic pump with tubing for filtering samples	Turbidity meter
pH meter with oxidation-reduction potential probe	Tygon tubing
Photoionization detector organic vapor analyzer.	Variable speed, low flow submersible pump (e.g., Grundfos MP1 groundwater sampling pump) (for purging and sampling)
Plastic sheeting	Water level indicator
Polypropylene rope	
Polytetrafluoroethelyne (PTFE) bailer with PTFE-coated stainless steel cable, double check valve top, and controlled flow bottom discharge attachment[2] for volatile organic compound (VOC) sampling (40-mL vials), and top discharge attachment for collecting larger samples (1-L bottles) (for purging and sampling)	

3. PROCEDURE

3.1 GENERAL

Groundwater sampling will follow these general steps:

- Arrive onsite
- Set up apparatus (generators, pumps, etc.)
- Glove
- Organic vapor check, water level, and well depth measurements

1. Temperature compensation and measurement capabilities are generally available as integral functions of pH meters and conductivity meters. If this is the case, a separate thermometer is not required.
2. Although use of a controlled flow bottom discharge valve is historically preferred, use of such a device can cause aeration of the sample.

ED_004144A_00000101-00455

- Sample non-aqueous phase liquids (NAPLs) (as required)
- Begin purge procedure
  - If using bailer to purge and sample, see Section 3.6
  - If using pump to purge and bailer to sample, see Section 3.7
  - If using bladder or low-flow pump to purge and sample, see Section 3.8
- Decontaminate/reglove
- Take samples
  - If with bailer, see Section 3.6
  - If with bladder or low flow pumps, see Section 3.8
- Decontaminate/dispose of wastes, move equipment to next site.

3.2 GENERAL RULES FOR GROUNDWATER FIELD PARAMETER LOGBOOK

Use only one site or installation per logbook, and only one sampling location per page or form (if using pre-printed forms). The same book may be used for more than one sampling event. First five pages will be reserved for index, general notes, etc. Sign and date each entry. Last five pages will be reserved for recording calibration data for the pH, temperature, turbidity, oxidation-reduction potential, dissolved oxygen, and conductivity meters. Use the page number or a separately recorded "Cal Reference Number" to refer to each calibration. As appropriate, insert the cardboard flap under the form being filled out, so that writing does not go through to the pages below. As appropriate, fill in the forms from front to back of the logbook, tearing out the white copy for each sample when the sample has been collected. This copy goes in the cooler with the sample, directly to the laboratory. The original copy must be torn out before you write on the back of the duplicate form. As appropriate, duplicate copies, index pages, and calibration sheets remain intact.

3.3 GROUNDWATER SAMPLING GENERAL RULES

Groundwater samples will be collected from the least contaminated wells first, progressing to the most contaminated[3]. Upon arrival at the well site, immediately set up and organize the purging, sampling, and filtration equipment. If needed, due to muddy or contaminated ground, remoteness from sampling vehicle, and\or for placement of hose(s) and\or power cord if a pump is used, place clean plastic sheeting at, or around the well, to serve as a clean staging area for purging and sampling equipment, as conditions warrant. Care must be exercised not to step on plastic sheeting. If the well is remote from the sampling vehicle, set up the filtration equipment

3. First round samples are to be collected from upgradient wells first, moving to downgradient wells under the assumption that upgradient wells will be less contaminated than downgradient wells. Results of first round analysis may mandate a change in sampling sequence.

ED_004144A_00000101-00456

and place rope, wrapped bailer, and pre-labeled sample containers on the plastic sheet, from the well. When a pump is to be used, situate the portable generator on level ground approximately 15 ft away from and downwind from the well. All generator maintenance (oil and fueling) is to be performed offsite. If the hose(s) and/or power cord of the pump are not on a reel, place the pump with its hose and power cord on the plastic sheeting downhill from the well.

Check well headspace for organic vapor which may pose a health and safety hazard and indicate the presence of NAPL. Measure depth(s) to and thickness(es) of NAPL(s) as appropriate. Measure the depth to water and depth of well. From the water depth, well diameter, sand pack length, etc., calculate the equivalent volume (1 EV) of water in the well.

1 EV = volume in casing + volume in saturated sand pack. Therefore, if the water table lies below the top of the sandpack, use the following equation:

$$1\ EV = (\pi R_w^2 h_w) + (0.30\pi(R_s^2 - R_w^2)h_w) * (0.0043)$$

If the water table lies above the top of the sandpack use this equation:

$$1\ EV = [(\pi R_w^2 h_w) + (0.30\pi(R_s^2 - R_w^2)h_s)] * (0.0043)$$

where

R_s = Radius of sandpack in inches
R_w = Radius of well casing in inches
h_s = Height of sandpack in inches
h_w = Water depth in inches

0.0043 gal/in.^{3}
Assumed filter pack porosity = 30 percent.

Samples will always be collected in order of decreasing volatility (i.e., the samples to be analyzed for the volatile constituents should be collected first). Deliver the VOC sample to the vial by allowing the water to trickle down the inside wall of the vial at a rate no greater than approximately 100 ml/min. Other samples may be delivered at a faster rate. Sampling rates will at no time exceed 1 L/min. Procedures for each class of samples are contained in the site-specific Quality Assurance Project Plan.

When collecting samples for volatile analysis, care should be taken to prevent analyte loss by volatilization. The following procedures should be adhered to when collecting these samples:

- Avoid excessive aeration and agitation of sample.
- Fill vial so that a reverse meniscus is present by adjusting the flow rate from the sampling device.

ED_004144A_00000101-00457

- Place septum on vial so that the PTFE side is in contact with the sample. After the cap is on the bottle, check for air bubbles in the sample. If air bubbles are present, properly dispose of that sample and recollect the sample in the same vial.

- Make sure vial is labeled and immediately transfer the vial to the cooler with ice.

Filtered and unfiltered samples will be taken for inorganics (metals) analyses. The samples will be filtered through an in-line 0.45-µM filter (preferred method), or by gravity through a 0.45-µM membrane placed in a filter funnel. Use forceps to place the membrane into the funnel and pour sample through funnel until appropriate volumes have been filtered.

If necessary, due to slow filtering, a peristaltic pump may be used to filter the sample through an in-line filter. Connect the pump to the generator, attach tygon tubing to the bottom discharge valve on the bailer. Start pump and collect sample from the end of the in-line filter directly into the proper container, preserved, and placed in the cooler. Filtered samples will be preserved in the field with acid to a pH of less than 2. Make sure sample bottle is labeled and the cap is on tightly. Then place in cooler with ice immediately.

— OR —

If a low flow pump is used collect the samples, filtered samples will be taken by installing a 0.45-µM filter in-line and pumping the water through the filter. Collect sample from the end of the in-line filter directly into the proper container, preserved, and placed in the cooler. Filtered samples will be preserved in the field with acid to a pH of less than 2. Make sure sample bottle is labeled and the cap is on tightly. Then place in cooler with ice immediately.

Unfiltered samples will be collected by slowly pouring the sample water into the appropriate sample container, being careful not to agitate or cause bubbles to form. Do not overfill bottles. Make sure sample bottle is labeled and the cap is on tightly, then place the sample in cooler with ice immediately.

All samples will be delivered to the laboratory as soon as possible. If possible, samples will be shipped on the same day as they are collected. If samples must be retained due to weekend sampling (Friday through Sunday), the laboratory will be notified as to the time sensitive nature of the samples.

3.4 SAMPLING OF NON-AQUEOUS PHASE LIQUIDS

If NAPLs are detected in the well, a sample from all layers must be collected prior to any purging activities. NAPLs may be indicated by the presence of volatiles in the well headspace, and confirmed by the oil/water interface probe.

ED_004144A_00000101-00458

Collecting light non-aqueous phase liquid (LNAPL) will be accomplished using a transparent bailer with a double check valve. This bailer will be slowly lowered until the bottom of the bailer is 1-2 in. below the LNAPL-water interface, then slowly withdrawn. Verify that the interface was sampled by visual inspection of the bailer contents through the side of the bailer. Measure the thickness of the LNAPL in the bailer and note in the Field Logbook. Sample for laboratory analysis. An additional field verification may be performed by decanting the remainder of the contents of the bailer into a glass jar, adding a hydrophobic dye such as Sudan IV, or Redoil, shaking the sample and looking for coloration of NAPL. Alternate field tests are: examine the sample under ultraviolet light (many fluoresce), or allow the sample to stand overnight, and examine for interface and/or volatiles in the headspace the following day. Refer to following sections on purging and sample collection for setup and general operation.

Collecting dense non-aqueous phase liquids (DNAPLs) will be accomplished using a transparent bailer with a double check valve. The bailer must be lowered very slowly to the bottom of the well and raised slowly out of the well in a controlled fashion. Sample for analysis as above. The same field check described above may be employed for DNAPL. Refer to following sections on purging and sample collection for set up and general operation.

If NAPLs are present in the well, **and** a low-flow pump is to be used for purging and sampling, the well will be allowed to re-equilibrate prior to purging and sampling. This will be accomplished by allowing the well to stand undisturbed for at least 8 hours prior to purging and sample collection.

3.5 WELL PURGING GENERAL RULES

Water within the casing of a well will stagnate, degas, lose volatiles, possibly precipitate metals due to changes in redox potential, and may react with the screen and/or casing material. It is, therefore, necessary to purge a sufficient volume of this stagnant water from the well and/or casing to ensure that a representative sample of formation water can be obtained. Traditionally, the volume of water to be purged was arbitrarily set at 3-5 equivalent volumes. Recent advances in sampling technologies have caused a re-thinking of such arbitrary purge volumes. It is for this reason that monitoring of select chemical and physical properties of the sample medium will be used instead of strict volumes to determine when a representative sample may be taken from a well.

Acceptable purge/sampling devices include: bailers, high-discharge submersible pumps (purge only), and variable speed, low-flow pumps which include both submersible pumps (purge and sample) and dedicated bladder pumps (purge and sampling). It is recommended to purge and sample at similar rates with one type device per well. An acceptable exception to this general rule is to use a high-discharge submersible pump to purge a deep, fast-recharging well, and a bailer to sample the same well.

Peristaltic, gas-lift, and centrifugal pumps can cause volatilization, produce high pressure differentials, and can result in variability in the analysis of some analytes of interest. These types of pumps will not be used to purge or sample wells.

ED_004144A_00000101-00459

To prevent groundwater from cascading down the sides of the screen into an open hole, thereby aerating the sample, purge rates will closely match recharge rates. If the static water level is within the casing, the initial purge rates may be set high enough to lower the water level to the top of the screen, then reduced to maintain that level.

Purging will be accomplished with either a submersible pump, a low-flow (submersible or bladder) pump, or bailer. The choice of bailer or pump will be based on depth to water table, volume to be purged, and permeability of the aquifer. If the well recharges rapidly and/or has greater than 20 gal (estimated EV) to be purged, water may be removed with a submersible pump or a low-flow pump. If the well recharges slowly and/or has less than 20 gal to be purged, water will be removed with a bailer or a low-flow pump.

Purging will be accomplished with as minimal disturbance to the surrounding formation as possible.

Purge water will be containerized onsite until analysis of samples is completed. Based on sample results, accumulated purge water will be properly disposed.

If the water level is within the screened interval and the well recharge rate is less than 0.1 L/min, purge the well using a low-flow pump as follows:

1. Draw the water down to within 1 ft of the top of the pump.

2. Allow the well to recover.

3. Check and record field parameters.

4. Repeat Steps 1 through 3 then collect samples for metals analysis only[4].

5. Note the event in the Field Logbook, and report the problem to the Project Manager. If this extremely low recharge problem consistently occurs in a given well, the well may be considered for re-development and/or replacement.

6. If adjacent wells have elevated VOC levels, additional soil gas surveys will be considered in the vicinity of the low recharge well to help determine the need for replacement.

3.6 PURGING AND SAMPLING WITH BAILERS

Bailers may be used for both purging and sampling wells if: (a) the well recharge rate is less than 4 L/min, (b) depth to the water table is less than 50 ft, and (c) less than 20 gal are to be purged (5 EV < 20 gal)[5].

4. Analyte losses due to volatilization in a drained well are too high for valid VOC sampling (McAlary and Barker 1987).

ED_004144A_00000101-00460

When purging with a bailer, either a polyvinyl chloride, PTFE, or stainless steel bailer may be used. The bailer will be attached to either a spool of PTFE-coated stainless steel cable or polypropylene rope. If using cable, attach it to the bailer using stainless steel cable clamps. Thoroughly decontaminate the cable after each use, prior to rewinding cable onto spool. Cable clamps and raw cable ends may serve to trap contamination. Exercise particular caution in decontaminating these areas. If using rope, attach the rope to the bailer using a bowline knot, dispense the needed length (a few feet more than the well depth) and cut the remainder away; then, at the end opposite the bailer, make a slip knot and place it around the well casing or protective posts to prevent losing the bailer and rope down the well. The polypropylene rope will be not reused; it will be properly disposed of. Either type of bailer will be repeatedly lowered gently into the well until it fills with water, removed, and the water will be discharged into an appropriate container until purging is complete. Care must be taken not to unduly agitate the water, as this tends to aerate the sample, increase turbidity, makes stabilization of required parameters difficult to achieve, and generally prolongs purging.

After purging 2 EV, obtain a sample of groundwater and measure the following stabilization parameters: temperature, conductivity, pH, turbidity, redox potential (Eh), and dissolved oxygen level at each successive half-well volume. When three of these stabilization parameters are in agreement within approximately 10 percent in three consecutive half-well volume samples, sufficient water has been purged from the well. The results of these tests should be recorded in the sampling logbook. Should these parameters not reach agreement, no more than five well volumes will be purged.

Immediately upon completion of purging, collect samples for laboratory analysis using a PTFE bailer on a PTFE-coated stainless steel cable. The bailer will be equipped with double check valve top and controlled flow bottom discharge attachments for VOC sampling (40-mL vials), and top discharge attachment for collecting larger samples (1-L bottles).

Slowly, so as not to agitate the water, lower the bailer into the well, using a spool of PTFE-coated cable. Allow bailer to fill, withdraw smoothly. Refill bailer as needed.

If the controlled flow bottom discharge attachment is used for VOC sampling, attach it to the bottom of the bailer. Using the stopcock valve on the bailer to control the flow, fill sample vials as described above in Section 3.3.

Remove check valve top and pour unfiltered sample into inorganics sample bottles.

Collect filtered samples as described in Section 3.3. Decontaminate bailer and cable.

5. These numbers are based on the following assumptions: (1) In purging, it is preferable to remove water at approximately the recharge rate; (2) 4 L/min is estimated as the approximate maximum rate at which water can be removed with a bailer from depths of 20-50 ft; and (3) 20 gal is estimated to be at the limit of the sampler's endurance, at which point fatigue and sloppiness of technique begin.

ED_004144A_00000101-00461

3.7 PURGING WITH PUMP, SAMPLING WITH BAILER

If the recharge rate of the well is greater than 30 L/min, or the water level is deeper than 50 ft, or more than 20 gal of purge water will be generated (5 EV > 20 gal), then purging and sampling may be accomplished using a submersible pump/bailer combination.

When purging with a pump, gradually lower the intake until it is submerged within the screened interval. Lower an electronic water level probe to the top of the screen (as determined from completion records) to the monitor water level, start pump, and slowly lower the pump as the water level continues to fall. Care should be exercised to lower the water column to the top of the screened interval (water level probe will stop beeping) but not below the top of the screen if possible. This will ensure that the stagnant layer has been removed, but should minimize the detrimental effects of over pumping the well. Secure hose(s) and/or power cord to casing and place discharge hose into the proper container, downhill and as far away from the well as possible. Determine and record the discharge rate.

Discharge rate = volume of container/time to fill container

The discharge rate will be established at approximately equal to or just greater than the well's recharge rate (determined from well development). If well development records are incomplete, recharge rate can be determined by monitoring the rise/fall of the water level within the casing as one purges the well. If the water level is static at a given pumping rate, but fluctuates up or down as pumping rate is decreased or increased, the pumping rate at which the water level is static is the recharge rate.

After purging 2 EV, obtain a sample of groundwater and measure the following stabilization parameters: temperature, conductivity, pH, turbidity, redox potential (Eh), and dissolved oxygen level at each successive half-well volume. When three of these stabilization parameters are in agreement within approximately 10 percent in three consecutive half-well volume samples, sufficient water has been purged from the well. The results of these tests should be recorded in the sampling logbook. Should these parameters not reach agreement, no more than five well volumes will be purged.

Immediately upon completion of purging, collect samples for laboratory analysis using a PTFE bailer on a PTFE-coated stainless steel cable. The bailer will be equipped with double check valve top and controlled flow bottom discharge attachments for VOC sampling (40-mL vials), and top discharge attachment for collecting larger samples (1-L bottles). Filtration of metals samples will be accomplished using either an in-line filter attached to the bottom of the bailer, or a funnel and appropriate filter (Section 3.3).

Slowly, so as not to agitate the water, lower the bailer into the well, using a spool of PTFE-coated cable. Allow bailer to fill, withdraw smoothly, fill sample containers as described in Section 3.6. Decontaminate bailer and cable in and decontaminate pump.

ED_004144A_00000101-00462

3.8 PURGING AND SAMPLING WITH LOW-FLOW PUMP

To obtain representative samples, subsurface disturbances should be kept to a minimum, thereby preventing sample alteration due to sampling actions. The reasoning behind the use of low-flow pumps to purge and sample monitoring wells is that these pumps minimize physical disturbance (turbulence) at the sampling point and chemical changes (aeration) in the medium. For these reasons, the low-flow pump is the preferred method for both purging and sampling in most cases. For the purposes of this SOP, "low-flow pumps" are defined as either dedicated bladder pumps or variable speed submersible pumps. Practical operational flow rates for these sampling devices range from 0.1 L/min to 30 L/min.

Low-flow pumps may be used for purging and sampling any well having recharge greater than 0.1 L/min, which is the practical lower limit of pump performance. Below that pumping rate, pump inefficiencies and/or overheating may alter the physical and chemical properties of the sample. If the pump is continuously operated at sampling rates higher than the well recharge rate, the water level will be lowered in the well, possibly allowing aeration of the sample which is unacceptable sampling procedure. Low-flow pumps are suitable for sampling wells with recharge rates lower than 0.1 L/min if precautions are taken to avoid aeration of the sample.

Low flow submersible pumps will be used as follows:

- Lower the pump into the well, slowly so as not to agitate the water, until the pump is at the mid-point of the screened interval or the mid-point of the water column if the static water table lies below the top of the screen[6]

- Attach the pump's umbilical cord (which will consist of power cord and sampling tubing) to the protective casing, or lock the cord spool so that the pump cannot move vertically in the well during sampling.

- Lower the water level probe into the well behind the pump until it just touches water. This will allow the sampler to monitor the water level while purging and sampling, and prevent the inadvertent drying of the well.

6. This assumes a 10-ft screened interval. If the screened interval is greater than 10 ft, multiple samples should be taken as follows:
   - If the screen is 10-12 ft, sample the canter of the water column, as outlined above.
   - If the screen is longer than 12 ft, and the water column is 10 ft or less, sample the center of the water column.
   - If the screen is longer than 12 ft, and the water column fills the screen, or extends above the screen, sample at 1/3 and 2/3 the height of the water column, or about every 6 ft.

ED_004144A_00000101-00463

- Begin purging at the pump's lowest setting, then gradually increase rate[7] until the pumping rate matches the aquifer recharge rate. **If the water level is above the top of the screen**, the pumping rate may be allowed to slightly exceed recharge rate, lowering the water level to no less than 1 ft above the screen, then reduced until it matches recharge rate and purging continued. **If the water level is below the top of the screen**, always keep the purge rate lower than well's recharge rate.

- Monitor stabilization parameters listed in Section 3.6 beginning immediately, using an in-line monitoring system. Record parameters regularly, at a rate of one set of parameters per each 1-3 liters of water removed from the well. When these parameters stabilize to within 10 percent over three consecutive readings, reduce[8] flow rate to 0.1 L/min (if needed) and begin collecting VOC samples directly from the discharge line.

- If the well recharges at a rate less than 0.1 L/min, purge until the water level is even with the top of the screen, allow the well to recover, and sample immediately.

- Remove and decontaminate water level probe and pump.

4. MAINTENANCE

Refer to manufacturer's requirements for maintenance of pumps and generators.

5. PRECAUTIONS

Refer to the site-specific Health and Safety Plan for appropriate personal protective equipment.

6. REFERENCES

Garske, E.E. and M.R. Schock. 1986. An Inexpensive Flow-Through Cell and Measurement System for Monitoring Selected Chemical Parameters in Groundwater.

Gass, T.E., J.F. Barker, R. Dickhout, and J.S. Fyfe. 1991. Test Results of the Grundfos Groundwater Sampling Pump, in Proceedings of the Fifth National Symposium on Aquifer Restoration and Groundwater Monitoring.

7. Some sources indicate that the pumping rate should not exceed 1 L/min, with 0.5 L/min being preferable. The optimal purge rate is highly aquifer dependent, and may range from less than 0.5 L/min to greater than 10 L/min. The purge rate for a given well will, therefore, be a field decision, based on well development, purge, and sampling records rather than SOP mandate.
8. Sampling should occur at the same rate as purging as long as aeration of sample does not occur.

ED_004144A_00000101-00464

McAlary, T. A. and J.F. Barker. 1987. Volatilization Losses of Organics During Groundwater Sampling From Low Permeability Materials, in Groundwater Monitoring Review. Fall.

Puls, R.W. and R.M. Powell. 1992. Acquisition of Representative Groundwater Quality Samples for Metals, in Groundwater Monitoring Review. Summer.

Puls, R.W., J.H. Eychaner, and R.M. Powell. 1990. Colloidal-Facilitated Transport of Organic Contaminants in Groundwater: Part I. Sampling Considerations, in EPA Environmental Research Brief. EPA/600/M-90/023. December.

Puls, R.W., R.M. Powell, D.A. Clark, and C.J. Paul. 1991. Facilitated Transport of Inorganic Contaminants in Groundwater: Part II Colloidal Transport, in EPA Environmental Research Brief. EPA/600/M-91/040. July.

Puls, R.W., R.M. Powell, B. Bledsoe, D.A. Clark, and C.J. Paul. 1992. Metals in Groundwater: Sampling Artifacts and Reproducibility, in Hazardous Waste & Hazardous Materials. Volume 9, No. 2.

ED_004144A_00000101-00465

This page intentionally left blank

ED_004144A_00000101-00466

Standard Operating Procedure No. 014
for
Collection of Production Well Samples

Prepared by

EA Engineering, Science, and Technology, Inc., PBC
225 Schilling Circle, Suite 400
Hunt Valley, Maryland 21031

Revision 0
December 2014

This page intentionally left blank

CONTENTS

Page

1. SCOPE AND APPLICATION 1
2. MATERIALS 1
3. PROCEDURE 1
4. MAINTENANCE 2
5. PRECAUTIONS 2
6. REFERENCES 2

ED_004144A_00000101-00469

This page intentionally left blank

ED_004144A_00000101-00470

1. SCOPE AND APPLICATION

The purpose of this Standard Operating Procedure (SOP) is to delineate protocols for the collection of groundwater samples from production wells. This protocol will allow for collection of samples from both active production wells and inactive production wells (Section 3).

2. MATERIALS

The following equipment may be required:

Conductivity meter	pH meter
Dissolved oxygen meter	Sample bottles and labels
Logbook or field parameter form	Temperature meter
Oxidation-reduction potential probe	Turbidity meter

3. PROCEDURE

Upon arrival at the well site, immediately set up and organize the sampling and ancillary equipment. If needed, due to muddy or contaminated ground and/or remoteness from sampling vehicle, place plastic sheeting at or around the sampling location as conditions warrant. Exercise caution not to step on and contaminate the sheeting.

If the well is remote from the sampling vehicle, set up the filtration equipment and place sample containers on the plastic sheet, uphill of the sampling location.

If a pump is to be used for filtration, situate the portable generator on level ground approximately 15 ft away from and downwind from the sampling location. All generator maintenance (oil and fueling) is to be preformed offsite.

If the well is currently in use, as close as possible to the well, open a tap to a high flow rate and allow the well to purge.

Obtain a sample of groundwater for temperature, conductivity, oxidation-reduction potential, dissolved oxygen, turbidity, and pH measurements. Record values in sampling logbook.

Take samples for physical stabilization (water quality) parameters every 5 minutes during the well purging process.

Allow the well to purge until the water quality parameters of pH, temperature, conductivity, turbidity, oxidation-reduction potential, and dissolved oxygen measurements stabilize within 10 percent in three consecutive 5-minute sampling periods, purging will be considered complete and sampling may proceed. Slow water flow rate to a trickle.

ED_004144A_00000101-00471

For procedures for collecting samples, with the exception of the sample source being a bailer, refer to SOP No. 013.

If the well is not currently in use, use a pump and bailer, or low-flow pump for sampling. Refer to SOP No. 013 for purging and sampling protocol. Decontaminate equipment. Refer to SOP Nos. 001, 002, 004, 005, 013, and 016.

4. MAINTENANCE

Not applicable.

5. PRECAUTIONS

Not applicable.

6. REFERENCES

U.S. Army Toxic and Hazardous Materials Agency. 1990. Installation Restoration Quality Assurance Program, December 1985, 1st Edition, March 1987, 2nd Edition.

ED_004144A_00000101-00472

Standard Operating Procedure No. 015
for
Document Control System

Prepared by

EA Engineering, Science, and Technology, Inc., PBC
225 Schilling Circle, Suite 400
Hunt Valley, Maryland 21031

Revision 0
December 2014

This page intentionally left blank

CONTENTS

Page

1. SCOPE AND APPLICATION 1

2. MATERIALS 1

3. PROCEDURE 1

4. MAINTENANCE 1

5. PRECAUTIONS 1

6. REFERENCES 1

This page intentionally left blank

ED_004144A_00000101-00476

1. SCOPE AND APPLICATION

The purpose of this Standard Operating Procedure is to delineate protocols for identifying and storing a complete set of documents relating to project tasks. Each document will receive a unique identification number comprised of elements describing the document.

2. MATERIALS

Not applicable.

3. PROCEDURE

Each project-related document will be given to the Document Control Officer. The Document Control Officer will record information for each document on a Document Control Sheet which will be retained as a backup record. The information from each Document Control Sheet will be maintained in a computer database.

The individual Document Control Number will be entered on the Document Log Sheet and will be written on the document.

The storage location for each document will be recorded on the Document Control Log Sheet and the documents will be stored in the recorded location.

The database file will be backed up on a regular basis to prevent accidental loss of the data.

4. MAINTENANCE

Not applicable.

5. PRECAUTIONS

None.

6. REFERENCES

None.

ED_004144A_00000101-00477

This page intentionally left blank

ED_004144A_00000101-00478

Standard Operating Procedure No. 016
for
Surface Water, Groundwater, and Soil/Sediment Field Logbooks

Prepared by

EA Engineering, Science, and Technology, Inc., PBC
225 Schilling Circle, Suite 400
Hunt Valley, Maryland 21031

Revision 0
December 2014

This page intentionally left blank

CONTENTS

Page

1. SCOPE AND APPLICATION 1

2. MATERIALS 1

3. PROCEDURE 1

3.1 Soil/Sediment Logbook 1

3.1.1 Field Parameter Form 1
3.1.2 Map File Form 3

3.2 Surface Water Logbook 4

3.2.1 Field Parameter Form 4

3.3 Groundwater Sampling Logbook 4

3.3.1 Field Parameter Form 4

3.4 Field Calibration Forms 7

3.4.1 Items on Figure SOP016-5 7

3.5 Groundwater Hydrology Tests Logbook 7

3.5.1 Field Permeability Test Data Sheet 7
3.5.2 Groundwater Levels – Single Well 9
3.5.3 Groundwater Levels – Single Well 10

3.6 Groundwater Levels – Multiple Wells 13
3.7 Groundwater Levels – Dataloggers 14

4. MAINTENANCE 16

5. PRECAUTIONS 16

6. REFERENCES 16

ED_004144A_00000101-00481

This page intentionally left blank

ED_004144A_00000101-00482

1. SCOPE AND APPLICATION

The purpose of this Standard Operating Procedure (SOP) is to delineate protocols for recording surface water, groundwater, soil/sediment sampling information, instrument calibration data, and data from hydrologic testing in the field logbooks. Acceptable field logbooks are: bound, unprinted books such as a surveyor's field book, or a federal supply service No. 7530-00-222-3525 record book (or equivalent); or they may be company-proprietary, pre-printed forms bound into a field logbook. Example forms are provided herein. Alternate, equivalent forms are acceptable.

2. MATERIALS

The following material may be required: applicable field logbook and indelible ink pen.

3. PROCEDURE

Information pertinent to soil/sediment, groundwater, or surface water sampling will be recorded in the appropriate logbook. Each page/form of the logbook will be consecutively numbered. Entries will be made in indelible ink. Corrections will consist of line-out deletions that are initialed and dated. If using carbon paper or self-duplicating forms, before entering data in logbook, insert a sheet protector between form sets to isolate first blank form from remaining forms.

3.1 SOIL/SEDIMENT LOGBOOK (Requires Figures SOP016-1 and SOP016-3)

3.1.1 Field Parameter Form (Items on Figures SOP016-1 and SOP016-2)

1. HIGH CONCENTRATION EXPECTED?: Answer "Yes" or "No."

2. HIGH HAZARD?: Answer "Yes" or "No."

3. SITE: Record the complete name of the site.

4. AREA: Record the area designation of the sample site.

5. INST CODE: Record the 2-letter installation code appropriate for the installation or site. Correct abbreviations can be found on Pages 3-6 of the IRDMS User's Guide for chemical data entry.

6. FILE NAME: Record "CSO" for a soil sample or "CSE" for a sediment sample.

7. SITE TYPE: Record the abbreviation appropriate for where the sample was taken. Correct abbreviations can be found on Pages 18-21 of the IRDMS User's Guide for chemical data entry. This entry must match the Site Type on the map file form.

ED_004144A_00000101-00483

8. SITE ID: Record a code up to 10 characters or numbers which is unique to the site.

9. FIELD SAMPLE NUMBER: Record a code specific for the sample.

10. DATE: Enter the date the sample was taken.

11. TIME: Enter the time (12-hour or 24-hour clock acceptable as long as internally consistent) the sample was taken.

12. AM PM: Circle "AM" or "PM" to designate morning or afternoon (12-hour clock).

13. SAMPLE PROG: Record "GQA" (Groundwater Quality Assessment) or other appropriate sample program.

14. DEPTH (TOP): Record the total depth sampled.

15. DEPTH INTERVAL: Record the intervals at which the plug will be sampled.

16. UNITS: Record the units of depth (feet, meters)

17. SAMPLE MEASUREMENTS: Check the appropriate sampling method.

18. CHK: Check off each container released to a laboratory.

19. ANALYSIS: Record the type of analysis to be performed on each sample container.

20. SAMPLE CONTAINER: Record the sample container type and size.

21. NO.: Record the number of containers.

22. REMARKS: Record any remarks about the sample

23. TOTAL NUMBER OF CONTAINERS FOR SAMPLE: Record the total number of containers.

24. SITE DESCRIPTION: Describe the location where the sample was collected.

25. SAMPLE FORM: Record the form of the sample (i.e., clay, loam, etc.) using The Unified Soil Classification System.

26. COLOR: Record the color of the sample as determined from standard Munsell Color Charts.

27. ODOR: Record the odor of the sample or "none." See SOP No. 001 Section 5.

28. PID (HNu): Record the measured PID (HNu) values.

ED_004144A_00000101-00484

29. UNUSUAL FEATURES: Record anything unusual about the site or sample.

30. WEATHER/TEMPERATURE: Record the weather and temperature.

31. SAMPLER: Record your name.

3.1.2 Map File Form (Figure SOP016-3)

1. The map file logbook form will be located on the reverse of the field parameter logbook form, or on an adjoining page of the field logbook (if level book is used).

2. SITE ID: Record the Site ID from the field parameter form.

3. POINTER: Record the field sample number for the sample being pointed to.

4. DESCRIPTION/MEASUREMENTS: Describe the location where the sample was taken, along with distances to landmarks.

5. SKETCH/DIMENSIONS: Diagram the surroundings and record the distances to landmarks.

6. MAP REFERENCE: Record which U.S. Geological Survey Quad Map references the site.

7. COORDINATE DEFINITION: Write the compass directions the X- and Y-Coordinates of the map run.

8. COORDINATE SYSTEM: Write "UTM" (Universal Transverse Mercator).

9. SOURCE: Record the 1-digit code representing the Map Reference.

10. ACCURACY: Give units (e.g., write "1-M" for 1 meter).

11. X-COORDINATE: Record the X-Coordinate of the sample site location.

12. Y-COORDINATE: Record the Y-Coordinate of the sample site location.

13. UNITS: Record the unit's map sections are measured in.

14. ELEVATION REFERENCE: Record whether topography was determined from a map or a topographical survey.

15. ELEVATION SOURCE: Record the 1-digit code representing the elevation reference.

16. ACCURACY: Record the accuracy of the map or survey providing the topographical information.

ED_004144A_00000101-00485

17. ELEVATION: Record the elevation of the sampling site.

18. UNITS: Write the units in which the elevation is recorded.

19. SAMPLER: Write your name.

3.2 SURFACE WATER LOGBOOK (Requires Figures SOP016-2 and SOP016-3)

3.2.1 Field Parameter Form (Items Unique to Figure SOP016-3)

1. CAL REF: Record the calibration reference for the pH meter.

2. pH: Record the pH of the sample.

3. TEMP: Record the temperature of the sample in degrees Celsius.

4. COND: Record the conductivity of the water.

5. For all other sections, see Section 3.2.1.

3.3 GROUNDWATER SAMPLING LOGBOOK (Requires Figures SOP016-2, SOP016-3, and SOP016-4)

3.3.1 Field Parameter Form (Items on Figure SOP016-4)

1. WELL NO. OR ID: Record the abbreviation appropriate for where the sample was taken. Correct abbreviations can be found on Pages 18-21 of the IRDMS User's Guide for chemical data entry.

2. SAMPLE NO.: Record the reference number of the sample.

3. WELL/SITE DESCRIPTION: Describe the location where the sample was taken, along with distances to landmarks.

4. X-COORD and Y-COORD: Record the survey coordinates for the sampling site.

5. ELEV: Record the elevation where the sample was taken.

6. UNITS: Record the units the elevation was recorded in.

7. DATE: Record the date in the form MM/DD/YY.

ED_004144A_00000101-00486

8. TIME: Record the time, including a designation of AM or PM.

9. AIR TEMP.: Record the air temperature, including a designation of C or F (Celsius or Fahrenheit).

10. WELL DEPTH: Record the depth of the well in feet and inches.

11. CASING HT.: Record the height of the casing in feet and inches.

12. WATER DEPTH: Record the depth (underground) of the water in feet and inches.

13. WELL DIAMETER: Record the diameter of the well in inches.

14. WATER COLUMN HEIGHT: Record the height of the water column in feet and inches.

15. SANDPACK DIAM.: Record the diameter of the sandpack. Generally, this will be the same as the bore diameter.

16. EQUIVALENT VOLUME OF STANDING WATER: Use one of the following equations, to determine one equivalent volume (EV):

1 EV = Volume in casing + volume in saturated sand pack. Or to restate:

$$1\ EV = (BR_w^2h_w + 0.30B(R_s^2-R_w^2)h_s) * (0.0043)$$

where
R_s = Radius of sandpack in inches
R_w = Radius of well casing in inches
h_s = Height of sandpack in inches
h_w = Water depth in inches

0.0043 = gal/in.^{3}
and filter pack porosity is assumed as 30 percent

— OR —

$$\text{Volume in casing} = (0.0043\ \text{gal/in.}^3)(B)(12\ \text{in./ft})(R_c^2)(W_h)$$

where
R_c = Radius of casing in inches
W_h = Water column height in feet

$$\text{Vol. in sandpack} = (0.0043\ \text{gal/in.}^3)(B)(12\ \text{in./ft})(R_b^2 - R_c^2)(W_h)(0.30)$$

(if W_h is less than the length of the sandpack),

ED_004144A_00000101-00487

— PLUS —

Vol. in sandpack = $(0.0043\ gal/in.^3)(B)(12\ in./ft)(R_b^2 - R_c^2)(S_h)(0.30)$

(if W_h is greater than the length of the sandpack).

where
R_b = Radius of the borehole
S_h = Length of the sandpack.

Show this calculation in the comments section.

17. VOLUME OF BAILER OR PUMP RATE: Record bailer volume or pump rate.

18. TOTAL NUMBER OF BAILERS OR PUMP TIME: Record the number of bailers required to remove 3 equivalent volumes (EV) of water from the well or the total purge time and volume as applicable.

19. WELL WENT DRY? Write "YES" OR "NO."

20. NUMBER OF BAILERS OR PUMP TIME: Record the number of bailers or pump time which made the well go dry.

21. VOLUME REMOVED: Record the volume of water (gal) removed before the well went dry.

22. RECOVERY TIME: Record the time required for the well to refill.

23. PURGE AGAIN?: Answer "YES" or "NO."

24. TOTAL VOL. REMOVED: Record the total volume of water (in gal) removed from the well.

25. CAL REF.: Record the calibration reference for the pH meter.

26. TIME: Record time started (INITIAL T[0]), 2 times DURING the sampling and the time sampling ended (FINAL).

27. pH: Record the pH at start of sampling (INITIAL), twice DURING the sampling and at the end of sampling (FINAL).

28. TEMP: Record the water temperature (Celsius) at the start of sampling, twice DURING the sampling and at the end of sampling (FINAL).

29. COND: Record the conductivity of the water at the start of sampling, twice DURING the sampling and at the end of sampling (FINAL).

ED_004144A_00000101-00488

30. D.O.: Record the dissolved oxygen level in the water at the start of sampling, twice DURING the sampling and at the end of sampling (FINAL).

31. TURBIDITY: Record the readings from the turbidity meter (nephelometer) and units at the start of sampling, twice DURING the sampling and at the end of sampling (FINAL).

32. ORD: Record the oxidation/reduction (RedOx) potential of the water sample at the start of sampling, twice DURING the sampling and at the end of sampling (FINAL).

33. HEAD SPACE: Record any positive readings from organic vapor meter reading taken in well headspace prior to sampling.

34. NAPL: Record the presence and thickness of any non-aqueous phase liquids (light or dense)

35. COMMENTS: Record any pertinent information not already covered in the form.

36. SIGNATURE: Sign the form.

3.4 FIELD CALIBRATION FORMS (Maintained as a separate logbook, or incorporated into sampling logbooks)

3.4.1 Items on Figure SOP016-5

1. Record time and date of calibration. Note whether 12- or 24-hour clock was used.

2. Record calibration standard reference number.

3. Record meter I.D. number

4. Record initial instrument reading, recalibration reading (if necessary), and final calibration reading on appropriate line.

5. Record value of reference standard (as required).

6. COMMENTS: Record any pertinent information not already covered on form.

7. SIGNATURE: Sign form.

3.5 GROUNDWATER HYDROLOGY TESTS LOGBOOK (Must include Figures SOP016-6 and SOP016-7 and/or SOP016-8, OR SOP016-9 or SOP016-10)

3.5.1 Field Permeability Test Data Sheet (Items on Figures SOP016-6)

1. CONTRACTOR: Organization performing the test.

2. SEQ. #: Enter page number of this set of forms (page # of #).

ED_004144A_00000101-00489

3. PROJECT NAME: Record the name assigned by the contractor's organization to the project.

4. PROJECT NO.: Record the contractor assigned project number or the contract number.

5. LOCATION: Specific location

6. CLIENT: Agency or company with the contract under which the work is being performed.

7. FIELD PARTY CHIEF: Printed name of the person responsible for this particular field test.

8. WELL #: Record the well number as it appears on the well completion tag, affixed to the protector casing or well completion records.

9. TEST TYPE: Short description of the type of test to be performed.

10. RISING/FALLING HEAD WITH SLUG: Check if the test involved the insertion/removal of and inert object.

11. RISING/FALLING HEAD WITHOUT SLUG: Check if the test involved the addition/removal of a quantity of water.

12. START DATE: Date on which the test was begun.

13. CLOCK TIME: Time each datum (depth to groundwater level) is collected. Note whether 12- or 24-hour clock was used.

14. ELAPSED TIME: Time since the last datum was collected.

15. DEPTH TO GWL (ft): Depth to the top of the groundwater table (Groundwater Level) as measured by manual methods.

16. REC. (ft): Water level as reported by transducer/datalogger (this is the depth of water above the transducer.

17. TIME: Time the discharge rate check was begun (addition or removal of water method). Note whether 12- or 24-hour clock was used.

18. FLOW METER (Addition or removal of water method): The amount of water added or removed as registered by the flowmeter, in gal of liters.

19. DISCHARGE RATE: Flowmeter reading divided by time interval (gal/min or liters/min).

ED_004144A_00000101-00490

20. SIGNATURE: The person completing this form must sign the form at the end of the test.

21. DATE: Date the form was signed.

3.5.2 Groundwater Levels – Single Well (Items on Figure SOP016-7)

1. CONTRACTOR: Organization performing the test.

2. SEQ. #: Enter page number of this set of forms (page # of #).

3. PROJECT NO.: Record the contractor assigned project number or the contract number.

4. WELL #: Record the well number as it appears on the well completion tag, affixed to the protector casing or well completion records.

5. PROJECT NAME: Record the name assigned by the contractor's organization to the project.

6. LOCATION: Specific location.

7. FIELD PARTY CHIEF: Printed name of the person responsible for this particular field test.

8. CLIENT: Agency with the contract under which the work is being performed.

Well Data

9. STICKUP: Enter the length of well casing extending above the average ground surface at the base of the protective casing.

10. MEASURED UP(+)/DOWN(-) FROM: Describe the starting point for the previous measurement.

11. MP ELEVATION: Enter the elevation of the measuring point here. NOTE: This datum may require reference to tables and/or maps and may be added after completing the day's field work.

12. DATUM = MSL OR: Is the datum for the previous elevation Mean Sea Level? If not, what? Also tell whether it was derived from a map elevation (write "MAP") or survey data (write "SURVEY").

13. MEASURING POINT DESCRIPTION: Describe the point used as the origin for all down-hole (water table) measurements. NOTE: Remedial investigation wells are required to have a permanently marked reference (measuring) point (refer to SOP No. 019).

14. REMARKS: Record any pertinent observations about the site/well conditions not specifically required in the preceding.

ED_004144A_00000101-00491

15. DATE: Date of each water level reading

16. TIME: Time of each water level reading. Note whether 12- or 24-hour clock was used.

17. ELAPSED TIME: Time since test was begun.

18. DEPTH TO WATER: Measured depth to the groundwater table.

19. WATER ELEVATION: Elevation of the top of the groundwater table (use datum listed above).

20. MEAS. METH.: Method used to measure the water level in the well (see abbreviation key at the bottom of the data sheet).

21. TAPE NO.: The unique identification number of the traceable standard tape used to calibrate the measuring device.

22. WELL STATUS: Condition of the well at the time of measuring (see abbreviation key at the bottom of the data sheet).

23. REMARKS: Any additional pertinent comments not specifically required above.

24. INITIALS: Initials of person completing this data entry.

25. ABBREVIATION KEYS: Self explanatory.

26. SIGNATURE: The person completing this form must sign the form at the end of the test.

27. DATE: Date the form was signed.

3.5.3 Groundwater Levels – Single Well (Items on Figure SOP016-8)

1. CONTRACTOR: Organization performing the test.

2. SEQ. #: Enter page number of this set of forms (page # of #).

3. PROJECT NO.: Record the contractor assigned project number or the contract number.

4. WELL #: Record the well number as it appears on the well completion tag, affixed to the protector casing or well completion records.

5. PROJECT NAME: Record the name assigned by the contractor's organization to the project.

6. LOCATION: Specific location.

ED_004144A_00000101-00492

7. FIELD PARTY CHIEF: Printed name of the person responsible for this particular field test.

8. CLIENT: Agency with the contract under which the work is being performed.

WELL DATA

9. STICKUP: Enter the length of well casing extending above the average ground surface at the base of the protective casing.

10. MEASURED UP(+)/DOWN(-) FROM: Describe the starting point for the previous measurement.

11. MP ELEVATION: Enter the elevation of the measuring point here. NOTE: This datum may require reference to tables and/or maps and may be added after completing the day's field work.

12. DATUM = MSL OR: Is the datum for the previous elevation Mean Sea Level? If not, what? Also tell whether it was derived from a map elevation (write "MAP") or survey data (write "SURVEY").

13. MEASURING POINT DESCRIPTION: Describe the point used as the origin for all down-hole (water table) measurements. NOTE: All Rhode Island wells are required to have a permanently marked reference (measuring) point (refer to SOP No. 019).

14. REMARKS: Record any pertinent observations about the site/well conditions not specifically required in the preceding.

15. DATALOGGER: This section is record of pertinent datalogger information.

16. MANUFACTURER: Record the manufacturer/brand name as stated on the datalogger.

17. MODEL: Enter the model number of the datalogger.

18. S/N: Enter the serial number of this datalogger.

19. TAG PROGRAMMED IN LOGGER: What is the identifier used in the datalogger's program to indicate that this unit was used to record a given data set?

20. TRANSDUCER: This section is a listing of pertinent information about the transducer used.

21. MANUFACTURER: Record the manufacturer/brand name as stated on the transducer.

22. MODEL: Enter the model number of the transducer.

23. S/N: Enter the serial number of this transducer.

ED_004144A_00000101-00493

24. INPUT/UNITS: What are the units this transducer uses?

25. RANGE: Record the pressure or depth range over which this transducer is certified.

CALIBRATION

26. PRESSURE RATING: This is taken from the manufacturer's specifications for a given transducer. (Usually in psi, or kpa).

27. "SUBMERGENCE = ___ (V) / (MV)": Record the voltage returned by the transducer at a given depth of submergence. Indicate whether the reading is in volts (v), or millivolts (mv).

28. VOLUME WATER ADDED/REMOVED: (Applicable if inert object insertion/removal method was not employed.) Record the volume of water added to or removed from the well.

29. DISCHARGE RATE: If z (above) is filled, enter the rate at which this water was added or removed.

30. INITIAL WATER LEVEL (ft): Enter the water level in the well at the beginning of the test.

31. PRESSURE TRANSDUCER SUBMERGENCE: Record the depth to which the transducer is submerged at the beginning of the test and the depth to the transducer at the end if the test. All depths will be recorded to the nearest 0.01 ft.

32. TIME: Record the time the test is begun and ended. Note whether 12- or 24-hour clock was used.

33. OBSERVED CHANGES IN ADJACENT WELLS: Note any changes in water levels in nearby wells.

34. RESULTS RECORDED ON DISKETTE #: Tracking number of the diskette on which these data are archived.

35. DISKETTE FILE NAME: Name of the file(s).

36. SIGNATURE: The person completing this form must sign the form at the end of the test

37. DATE: Date the form was signed.

ED_004144A_00000101-00494

3.6 GROUNDWATER LEVELS – MULTIPLE WELLS (Items on Figure SOP016-9)

1. CONTRACTOR: Organization performing the test.

2. SEQ. #: Enter page number of this set of forms (page # of #).

3. PROJECT NO.: Record the contractor assigned project number or the contract number.

4. PROJECT NAME: Record the name assigned by the contractor's organization to the project.

5. LOCATION: Specific location.

6. FIELD PARTY CHIEF: Printed name of the person responsible for this particular field test.

7. CLIENT: Agency with the contract under which the work is being performed.

8. REMARKS: Any pertinent observations not specifically required above.

9. WELL: Record the well number as it appears on the well completion tag, affixed to the protector casing or well completion records.

10. DATE: Date this measurement was made.

11. TIME: Time this measurement was made. Note whether 12- or 24-hour clock was used.

12. DEPTH TO WATER: Depth from MP to top of groundwater table.

13. STICKUP: Enter the length of well casing extending above the average ground surface at the base of the protective casing.

14. MP ELEV.: Enter the elevation of the measuring point here. NOTE: This datum may require reference to tables and/or maps and may be added after completing the day's field work.

15. MEAS. METH.: Method used to measure the water level in the well (see abbreviation key at the bottom of the data sheet).

16. REMARKS/MP: Describe the location and nature of the measuring point.

17. INITIALS: Initials of the person completing this form.

18. ABBREVIATION KEYS: Self explanatory.

ED_004144A_00000101-00495

19. SIGNATURE: The person completing this form must sign the form at the end of the test.

20. DATE: Date the form was signed.

3.7 GROUNDWATER LEVELS – DATALOGGERS (Items on Figure SOP016-10)

1. CONTRACTOR: Organization performing the test.

2. SEQ. #: Enter page number of this set of forms (page # of #).

3. PROJECT NO.: Record the contractor assigned project number or the contract number.

4. WELL #: Record the well number as it appears on the well completion tag, affixed to the protector casing or well completion records.

5. PROJECT NAME: Record the name assigned by the contractor's organization to the project.

6. LOCATION: Specific location.

7. FIELD PARTY CHIEF: Printed name of the person responsible for this particular field test.

8. CLIENT: Agency with the contract under which the work is being performed.

WELL DATA

9. STICKUP: Enter the length of well casing extending above the average ground surface at the base of the protective casing.

10. MEASURED UP(+)/DOWN(-) FROM: Describe the starting point for the previous measurement.

11. MP ELEVATION: Enter the elevation of the measuring point here. NOTE: This datum may require reference to tables and/or maps and may be added after completing the day's field work.

12. DATUM = MSL OR: Is the datum for the previous elevation Mean Sea Level? If not, what? Also tell whether it was derived from a map elevation (write "MAP") or survey data (write "SURVEY").

13. MEASURING POINT DESCRIPTION: Describe the point used as the origin for all down-hole (water table) measurements. NOTE: All Rhode Island wells are required to have a permanently marked reference (measuring) point (refer to SOP No. 019, Section 3.4).

14. REMARKS: Record any pertinent observations about the site/well conditions not specifically required in the preceding.

ED_004144A_00000101-00496

DATALOGGER (This section is a record of pertinent datalogger information)

15. MANUFACTURER: Record the manufacturer/brand name as stated on the datalogger.

16. MODEL: Enter the model number of the datalogger.

17. S/N: Enter the serial number of this datalogger.

18. TAG PROGRAMMED IN LOGGER: What is the identifier used in the datalogger's program to indicate that this unit was used to record a given data set?

TRANSDUCER (This section is a listing of pertinent information about the transducer used)

19. MANUFACTURER: Record the manufacturer/brand name as stated on the transducer.

20. MODEL: Enter the model number of the transducer.

21. S/N: Enter the serial number of this transducer.

22. INPUT/UNITS: What are the units this transducer uses?

23. RANGE: Record the pressure or depth range over which this transducer is certified.

CALIBRATION

24. PRESSURE RATING: This is taken from the manufacturer's specifications for a given transducer (usually in psi, or kpa).

25. "SUBMERGENCE = ___ (V) / (MV)": Record the voltage returned by the transducer at a given depth of submergence. Indicate whether the reading is in volts (v), or millivolts (mv).

26. DATE: Date of each water level reading

27. TIME: Time of each water level reading. Note whether 12- or 24-hour clock was used.

28. LOGGING TIME INTERVAL: Time since test was begun.

29. WL FEET BELOW MP: Measured depth to the groundwater table from measuring point.

30. SUBMERGENCE: Depth of water above the transducer.

31. MEAS.METHOD: What device/method was used to measure the water level.

32. TAPE NO.: Record the tape identification number.

33. TRANSDUCER MOVED?: Was the transducer moved since the last water level reading?

ED_004144A_00000101-00497

34. REMARKS: Any pertinent remarks not otherwise specified.

35. INITIALS:

DATA TRANSFER TO DISKETTE:

36. DATE: Date data were archived onto diskette.

37. TIME: Time stamp the computer assigns the data file.

38. FILE NAME: Name assigned the data file.

39. SOFTWARE USED FOR TRANSFER: Any special software, or computer operating system used to write the files to diskette. NOTE: If a "shareware" archiver which compresses files was used, and the archived file is not self-extracting, a copy of the unarchive program should be copied onto the diskette also.

40. OUTPUT FORMAT: What is the format of the output file? (DOS, UNIX, Binary, Compressed?)

41. INITIALS: Initials of the person who copied the data to diskette.

42. ABBREVIATION KEY: Self-explanatory.

4. MAINTENANCE

Not applicable.

5. PRECAUTIONS

None.

6. REFERENCES

U.S. Environmental Protection Agency. 1984. User's Guide to the Contract Laboratory Program. July.

ED_004144A_00000101-00498

FIGURE SOP016-1
FIELD PARAMETER LOGBOOK
SOIL AND SEDIMENT SAMPLES

HIGH CONCENTRATION EXPECTED? HIGH HAZARD?

INSTALLATION/SITE _____ AREA _____

INST CODE FILE NAME _____

SITE TYPE SITE ID
FIELD SAMPLE NUMBER

DATE (MM/DD/YY) / / TIME AM PM SAMPLE PROG.

DEPTH (TOP) DEPTH INTERVAL UNIT _____

SAMPLING METHOD:

SPLIT SPOON AUGER SHELBY TUBE SCOOP OTHER

CHK	ANALYSIS	SAMPLE CONTAINER	NO.	REMARKS

TOTAL NUMBER OF CONTAINERS FOR SAMPLE

DESCRIPTION OF SITE AND SAMPLE CONDITIONS
SITE DESCRIPTION:_____
SAMPLE FORM _____ COLOR _____ ODOR _____
PID (HNu) _____ UNUSUAL FEATURES _____
_____
WEATHER/TEMPERATURE
SAMPLER

HIGH CONCENTRATION EXPECTED? HIGH HAZARD?

ED_004144A_00000101-00499

FIGURE SOP016-2
FIELD PARAMETER LOGBOOK
GROUNDWATER AND SURFACE WATER SAMPLES

INSTALLATION/SITE AREA
INST CODE FILE NAME SITE TYPE
SITE ID FIELD SAMPLE NUMBER
DATE (MM/DD/YY) / / TIME AM PM SAMPLE PROG.
DEPTH (TOP) DEPTH INTERVAL UNITS

SAMPLING MEASUREMENTS

CAL REF.	pH	TEMPERATURE C	CONDUCTIVITY	OTHER

CHK	ANALYSIS	SAMPLE CONTAINER	NO.	REMARKS

TOTAL NUMBER OF CONTAINERS FOR SAMPLE

DESCRIPTION OF SITE AND SAMPLE CONDITIONS

SITE DESCRIPTION
SAMPLING METHOD
SAMPLE FORM COLOR ODOR
PID (HNu)
UNUSUAL FEATURES
WEATHER/TEMPERATURE _____ SAMPLER _____

ED_004144A_00000101-00500

FIGURE SOP016-3
MAP FILE LOGBOOK

SITE ID POINTER _____
DESCRIPTION/MEASUREMENTS
SKETCH/DIMENSIONS:

MAP REFERENCE
COORDINATE DEFINITION (X is Y is)
COORDINATE SYSTEM SOURCE ACCURACY
X-COORDINATE Y-COORDINATE UNITS
ELEVATION REFERENCE
ELEVATION SOURCE ACCURACY ELEVATION
UNITS

SAMPLER

ED_004144A_00000101-00501

FIGURE SOP016-4
MAP FILE AND PURGING LOGBOOK
GROUNDWATER SAMPLES

WELL COORD. OR ID SAMPLE NO._____
WELL/SITE
DESCRIPTION_____
_____
X-COORD. Y-COORD. _____ ELEV. UNITS
DATE ____/____/____ TIME AIR TEMP.

WELL DEPTH _____ ft _____ in. CASING HT. _____ ft _____ in.
WATER DEPTH _____ ft _____ in. WELL DIAMETER _____ in.
WATER COLUMN HEIGHT _____ ft _____ in. SANDPACK DIAM. _____ in.
EQUIVALENT VOLUME OF STANDING WATER _____ (gal) (L)
VOLUME OF BAILER _____ (gal) (L) or PUMP RATE _____ (gpm) (lpm)
TOTAL NO. OF BAILERS (5 EV)_____ or PUMP TIME _____ MIN.
WELL WENT DRY? [Yes] [No] NUM. OF BAILERS _____ or PUMP TIME_____MIN
VOL. REMOVED _____ (gal) (L) RECOVERY TIME _____ MIN
PURGE AGAIN? [Yes] [No] TOTAL VOL. REMOVED _____ (gal) (L)

Date and Time	Quantity Removed	Time Required	pH	Cond	Temp	ORD	Turb	DO	Character of water (color/ clarity/odor/partic.)
(before)									
(during)									
(during)									
(during									
(after)									

COMMENTS:_____
_____
_____
_____

_____
SIGNATURE

ED_004144A_00000101-00502

FIGURE SOP016-5
FIELD CALIBRATION: pH, CONDUCTIVITY, TEMPERATURE, TURBIDITY, OXIDATION-REDUCTION POTENTIAL, AND DISSOLVED OXYGEN METERS

INITIAL CALIBRATION	FINAL CALIBRATION
DATE:	DATE:
TIME:	TIME:

pH METER CALIBRATION

CALIBRATION STANDARD REFERENCE NO: _____

METER ID _____

pH STANDARD	INITIAL READING	RECALIB. READING	FINAL READING
7.0			
10.0			
4.0			

CONDUCTIVITY METER CALIBRATION

CALIBRATION STANDARD REFERENCE NO: _____

METER ID _____

COND. STANDARD	INITIAL READING	RECALIB. READING	FINAL READING

TEMPERATURE METER CALIBRATION

METER ID _____

TEMP. STANDARD	INITIAL READING	RECALIB. READING	FINAL READING
ICE WATER			
BOILING WATER			
OTHER			

ED_004144A_00000101-00503

FIGURE SOP016-5 *(continued)*

TURBIDITY METER CALIBRATION

CALIBRATION STANDARD REFERENCE NO: _____

METER ID _____

STANDARD	INITIAL READING	RECALIB. READING	FINAL READING

ORD METER CALIBRATION

CALIBRATION STANDARD REFERENCE NO: _____

METER ID _____

STANDARD	INITIAL READING	RECALIB. READING	FINAL READING

DISSOLVED OXYGEN METER CALIBRATION

CALIBRATION STANDARD REFERENCE NO: _____

METER ID _____

STANDARD	INITIAL READING	RECALIB. READING	FINAL READING

COMMENTS:_____

_____

_____

_____

_____

SIGNATURE

ED_004144A_00000101-00504

FIGURE SOP016-6
FIELD PERMEABILITY TEST DATA SHEET

Contractor: **Seq. #** /

Project Name:	Project #:
Location:	Client:
Party Chief:	Contractor:
Observation Well:	
Test Type: Rising/Falling Head w/Slug	Rising/Falling Head w/out Slug
Start Date:	

								Discharge Rate		
Clock Time	Elapsed Time (min)	Depth to GWL (ft)	Rec (ft)	Clock Time	Elapsed Time	Depth to GWL (ft)	Rec (ft)	Time	Flow Meter	Discharge Rate

Signature: _____ **Date:** _____

ED_004144A_00000101-00505

FIGURE SOP016-7
GROUNDWATER LEVELS – SINGLE WELL

Contractor: **Seq. #** /

Project No.:
Project Name:
Field Party Chief:

WELL DATA:

Stickup: (ft)
MP Elevation:
Well No.: Site: Area:
Site: Area:
Area:

up (+)/down (-) from: Datum = MSL or:
Datum = MSL or:

Measuring Point Description:

Datalogger:
Manufacturer: Model: S/N:
Tag No. Programmed in Logger:

Transducer: Manufacturer: Model: S/N:
Input/Units: Range:

Calibration:
Pressure Rating:
0 ft submergence = (v) / (mv) ft submergence = (v) / (mv)

Volume Water Added/Removed:
Discharge Rate:
Initial Water Level (ft):

Pressure Transducer Submergence
Initial (ft): Final(ft): Time:Start: End:
Observed Changes in Adjacent Wells:

Results Recorded on Diskette #:
Diskette File Name:

Signature: _____ **Date:** _____

ED_004144A_00000101-00506

FIGURE SOP016-8
GROUNDWATER LEVELS – MULTIPLE WELLS

Contractor: **Seq. #** /

Project No.:
Project Name:
Field Party Chief:

WELL DATA:

Stickup: (ft)
MP Elevation:

Measuring Point Description:
Remarks:
Well No.:
Site: Area: up (+)/down (-) from:
up (+)/down (-) from:
up (+)/down (-) from:
Datum = MSL or:

Date	Time	Elapsed Time	Depth to Water	Water Elevation	Meas. Meth.	Tape No.	Well Status	Remarks	Initials

Measurement Method:
A = Airline
C = Chalk and tape
E = Electric tape
T = Tape with popper
X = Other (describe in remarks)

Well Status:
D = Dry
F = Flowing
P = Pumping
RP = Recently pumped
NP = Nearby well pumping
NRP = Nearby well recently
X = Obstructed

ED_004144A_00000101-00507

Signature: _____ **Date:** _____

FIGURE SOP016-8 ***(continued)***

Contractor: **Seq. #** /

Project No.:
Project Name: Location:
Field Party Chief: Client:

Well	Date	Time	Depth to Water	Stickup	MP Elev.	Meas. Meth.	Tape No.	Remarks/MP	Initials

Measurement Method:
A = Airline
C = Chalk and tape
E = Electric tape
T = Tape with popper
X = Other (describe in remarks)

Well Status:
D = Dry
F = Flowing
P = Pumping
RP = Recently pumped
NP = Nearby well pumping
NRP = Nearby well recently
X = Obstructed

ED_004144A_00000101-00508

FIGURE SOP016-9
GROUNDWATER LEVELS DATALOGGERS

Contractor
Project No.: **Well No.:**
Project Name: **Site:**
Field Party Chief: **Area:**

WELL DATA: Stickup: (**ft**) **up (+)/down (-) from:**
MP Elevation: **Datum = MSL or:**

Measuring Point Description:
Remarks:

Datalogger:
Manufacturer: Model: S/N:
Tag No. Programmed in Logger:
Transducer: Manufacturer: Model: S/N:
Input/Units: Range:
Calibration: Pressure Rating:
0 ft submergence = (v) / (mv) ft submergence = (v)

Logging	Date	Time	Logging Time Interval	WL, ft Below MP	Submergence (logger reading)	Meas. Method	Tape No.	Well Status	Transducer Moved	Remarks	Initials
Start											
Stop											
Start											
Stop											

Data Transfer to Disk

Date	Time	File Name	Software Used for Transfer	Output Format	Initials

Measurement Method:
A = Airline
C = Chalk and tape
E = Electric tape
T = Tape with popper
X = Other (describe in remarks)

Well Status:
D = Dry
F = Flowing
P = Pumping
RP = Recently
NP = Nearby well pumping
NRP = Nearby well recently pumped
X = Obstructed

Signature **Date**

ED_004144A_00000101-00509

This page intentionally left blank

Standard Operating Procedure No. 019
for
Monitoring Well Installation

Prepared by

EA Engineering, Science, and Technology, Inc., PBC
225 Schilling Circle, Suite 400
Hunt Valley, Maryland 21031

Revision 0
December 2014

This page intentionally left blank

CONTENTS

Page

1. SCOPE AND APPLICATION 1

2. MATERIALS 1

   2.1 Drilling Equipment 1
   2.2 Well Installation Materials 2
   2.3 Documentation 4
   2.4 Geologist's Personal Equipment 4

3. PROCEDURE 4

   3.1 Materials Approval 4
   3.2 Drilling 5
   3.3 Logging 8
   3.4 Well Construction and Installation 9

      3.4.1 Grout 11

   3.5 Monitoring Well Completion 11
   3.6 Well Development 14

      3.6.1 Materials Required 14
      3.6.2 Summary of Procedures and Data Requirements 15

4. MAINTENANCE 16

5. PRECAUTIONS 16

6. REFERENCES 16

APPENDIX A: FIELD RECORD OF WELL DEVELOPMENT FORM

ED_004144A_00000101-00513

This page intentionally left blank

ED_004144A_00000101-00514

1. SCOPE AND APPLICATION

The installation of monitoring wells is contingent upon the existing conditions at the project site. The purpose of this Standard Operating Procedure is to delineate the quality control measures required to ensure the accurate installation of monitoring wells. The applicable Work Plan should be consulted for specific installation instructions. The term "monitoring wells," as used herein, is defined to denote any environmental sampling well. An example well log form is provided in Appendix A. Alternate, equivalent forms are acceptable.

2. MATERIALS

2.1 DRILLING EQUIPMENT

The following drilling equipment may be required:

- Appropriately sized drill adequately equipped with augers, bits, drill stem, etc.
- Steam cleaner and water obtained from approved source for decontaminating drilling equipment.
- Photoionization Detector: Microtip HL-200 (or equivalent)
- Water level indicator
- Weighted steel tape measure
- Lower explosive limit – oxygen monitor
- Steel drums for intrusion derived wastes (drill cuttings, contaminated personal protective equipment, decontamination solutions, etc.)
- Source of approved water
- Heavy plastic sheeting
- Sorbent pads and/or log.

ED_004144A_00000101-00515

2.2 WELL INSTALLATION MATERIALS[1]

The following well installation materials may be required:

- Well screen:[2]

  — Polyvinyl chloride (PVC): JOHNSON (or equivalent); PVC 0.010 slot; Schedule 40; flush-threaded (leak-proof) joints; PVC complies with American Society for Testing and Materials (ASTM) D2665, ASTM D1784, and ASTM F480; free of ink markings; cleaned and prepackaged by manufacturer.

  — Stainless steel: JOHNSON (or equivalent); stainless steel 0.010 slot; 304 stainless steel[3]; ASTM F480 flush threads; cleaned, wrapped, and heat sealed by manufacturer.

- Riser pipe:

  — PVC: JOHNSON (or equivalent); STD; PVC; Schedule 40; flush-threaded (leak-proof) joints; PVC complies with ASTM D2665, ASTM D1784, and ASTM F480; free of ink markings; cleaned and prepackaged by manufacturer.

  — Stainless steel: JOHNSON (or equivalent); Schedule 5; 304 stainless steel; ASTM Type A312 material; 4-in. diameter; cleaned, wrapped, and heat sealed by manufacturer.

- Plugs/caps: JOHNSON (or equivalent); standard PVC or stainless steel.

- Filter pack: MORIE, 100 well gravel (or equivalent). NOTE: Final gradation may vary as a function of the gradation of the formation.[2]

- Fine Ottawa sand.

- Bentonite seal: BAROID, bentonite pellets (3/8-in. diameter)

- Cement: Type II Portland Cement (table below).

1. Technical information on all installed materials (screens, riser pipe, filter pack, bentonite, cement, etc.) and representative samples of the proposed filter pack, bentonite powder, and bentonite pellets will be supplied to the Project Manager.
2. Well screen slot size and filter pack gradation will be determined from sieve analysis of aquifer materials. Screen and casing material type will be determined based on field tests of groundwater chemistry and contaminants.
3. Unless the sum of Cl-, F-, and Br- is >1,000 ppm, in which case Type 316 should be used.

ED_004144A_00000101-00516

Cement Type	Special Characteristics	Recommended Usage
I	No special properties	General use as grout mix or cement plug (if sulfates <250 ppm), surface pad.
IA	Air-entraining Type I (Note that air entrainment properties can be achieved by chemical admixtures)	Air entrainment gives cement greater freeze-thaw resistance. Recommended for surface pads.
II	Moderate sulfate resistance, low heat of hydration	General use as grout mix or cement plug where groundwater sulfate >250 ppm and <1,500 ppm, surface pad.
IIA	Air-entraining Type II	See Type IA.
III	High early strength, high heat of hydration	Elevated temperature can damage well casing and fracture grout/cement plugs. NOT RECOMMENDED.
IIIA	Air-entraining Type III	NOT RECOMMENDED.
IV	Low heat of hydration	General use as grout mix or cement plug preferred type for well abandonment to ensure intact grout/cement plug.
V	High Sulfate resistance	Use when groundwater sulfate levels >1,500 ppm.

- Bentonite powder: BAROID, Aquagel Gold Seal.
- Steel protective casing: BRAINARD-KILMAN (or equivalent) zinc-plated steel, lockable, painted.[4]
- Geotextile: MIRAFI (or equivalent); GTF 130; non-woven; 4 oz.
- Coarse (blanket) gravel: Crushed stone aggregate.
- Containers for purged water, as required.
- Submersible pump or bailer of appropriate capacity, and surge block sized to fit well.
- Hach DREL 2000 portable laboratory (or equivalent).
- Conductivity, pH, oxidation-reduction potential (ORP), turbidity, dissolved oxygen, and temperature meters.
- Electric well sounder and measuring tape.
- Portland Type II cement (see previous table).
- Steel Posts (pickets), painted (see footnote).

4. All painted components (protector casing, steel pickets) will be painted high-visibility orange and allowed to dry completely prior to being brought onsite.

ED_004144A_00000101-00517

2.3 DOCUMENTATION

The following document may be provided:

- Copy of appropriate Work Plan
- Copy of approved Health and Safety Plan
- Copies of well and excavation permits
- Boring log forms
- Well completion diagram form
- Well development form.

2.4 GEOLOGIST'S PERSONAL EQUIPMENT

The following equipment may be required for the geologist:

- 10X handlens
- Unified Soil classification System chart
- Munsell color chart
- Sieve set (Keck model SS-81 or equivalent)
- Personal protective equipment as required by the Health and Safety Plan.

3. PROCEDURE

3.1 MATERIALS APPROVAL

Water sources for drilling, grouting, sealing, filter placement, well installation, and equipment decontamination must be approved by the Project Manager prior to arrival of the drilling equipment. Information required for the water source includes: water source, manufacturer/ owner, address and telephone number, type of treatment and filtration prior to tap, time of access, cost per gallon (if applicable), dates and results associated with all available chemical analyses over the past 2 years, and the name and address of the analytical laboratory (if applicable).

Pure sodium bentonite with no additives (bentonite) will be the only drilling fluid additive allowed, and its use must be approved by the Project Manager prior to the arrival of the drilling equipment. The information required for evaluation includes: brand name, manufacturer, manufacturer's address and telephone number, product description, and intended use for the product.

Granular Filter Pack material must be approved by the Project Manager prior to drilling. A 1-pint representative sample must be supplied to the Project Manager. Information required includes: lithology, grain size distribution, brand name, source, processing method, and slot size of intended screen.

Portland Type II cement will be used for grout (see previous table).

ED_004144A_00000101-00518

3.2 DRILLING

The objective of the selected drilling technique is to ensure that the drilling method provides representative data while minimizing subsurface contamination, cross-contamination of aquifers, and drilling costs. The preferred drilling method is with a hollow-stem auger. Other drilling methods[5] are approved as conditions warrant, and will not require variances be issued by the U.S. Environmental Protection Agency. The method used at a specific site will be proposed in the work plan and evaluated by the Project Manager. Any drilling method not listed herein will require approval on a case by case basis by the U.S. Environmental Protection Agency.

A Site Geologist will be present during all well drilling and installation activities and will fully characterize all tasks performed in support of these activities into the monitoring well logbook. The Site Geologist will be responsible at only one operating rig for the logging of samples, monitoring of drilling operations, recording of water losses/gains and groundwater data, preparing the boring logs and well diagrams, and recording the well installation procedures of the rig. The Site Geologist will have onsite sufficient equipment in operable condition to perform efficiently his/her duties as outlined in the contractual documents. Items in the possession of each Site Geologist will include the approved Health and Safety Plan, this Standard Operating Procedure, a hand lens (10X), a standard color chart, grain-size chart, and a weighted (with steel or iron) steel tape long enough to measure the deepest well, heavy enough to reach that depth, and small enough to fit readily within the annulus between the well and drill casing. The Site Geologist will also have onsite, a water level measuring device, preferably electrical.

Only solid vegetable shortening (e.g., Crisco®) without flavoring or additives may be used on downhole drilling equipment. Additives containing either lead or copper will not be allowed. In addition, polychlorinated biphenyls will not be permitted in hydraulic fluids or other fluids used in the drilling rig, pumps, and field equipment/vehicles.

---

5. If the design depth of the well is <100 ft, open, hollow-stem augers will be used to drill the well unless "running sands" preclude the use of open augers. In that case, an inert "knockout" plug may be used in the bottom of the auger string. This plug will be driven out of the augers and left at the bottom of the hole when the well is installed.

   If the design depth of the well is >100 ft, rotary drilling methods may be used to install wells. The following drill fluids and methods are approved in the order listed: (1) rotary drilling with water from an approved source as drilling fluid (clays from the formations will tend thicken the fluid and coat the walls of the borehole and this is acceptable); (2) rotary drilling with water as a fluid, advancing a temporary casing with the bit to maintain an open hole; and (3) mud rotary using water with additives as drill fluid. Due to the potential for aquifer contamination and plugging, mud rotary drilling is not recommended for monitoring wells. If, however, "running sands" are encountered and the aquifer is expected to have a relatively high flow rate, then mud rotary is considered an approved method. Pure sodium bentonite is the only approved additive. Mud rotary drilling must be halted at the last aquitard above the target aquifer. Casing must be set, all bentonite-bearing fluids flushed from the hole and drill rig, and drilling may be resumed using water only as the drill fluid until the target depth is reached.

ED_004144A_00000101-00519

Surface runoff or other fluids will not be allowed to enter any boring or well during or after drilling/construction.

Antifreeze used to keep equipment from freezing will not contain rust inhibitors and sealants. Antifreeze is prohibited in areas in contact with drilling fluid. The ground surface at the well site will be protected from possible coolant, fuel, and hydraulic fluid spills and/or leakage by placement of plastic sheeting with raised edges, draining into a lined catch basin large enough to contain spills and/or leakage from motors, radiators, or vehicle tanks. Sorbent pillows will be placed to catch obvious leaks from the drill rig. Sorbent logs may be used instead of, or in conjunction with, a lined catch basin to contain spills.

An accurate measurement of the water level will be made upon encountering water in the borehole and later upon stabilization. Levels will be periodically checked throughout the course of drilling. Any unusual change in the water level in the hole, such as a sudden rise of a few inches may indicate artesian pressure in a confined aquifer, will be the basis for cessation of drilling. The geologist will immediately contact the Project Manager[6]. Particular attention for such water level changes will be given after penetrating any clay or silt bed, regardless of thickness, which has the potential to act as a confining layer.

Anticipated depths of wells are given in well specific work plans. In case the previously defined criteria have not been met before the depth range for a given hole is reached, the geologist will stop the drilling and confer with the Project Manager. The current boring conditions (depth, nature of the stratigraphic unit, and water table depth) will be compared to those of other wells nearby to decide to continue drilling or to terminate and complete the well.

If the well is to be installed in the surficial aquifer, drilling will be terminated before penetrating the basal aquitard. The basal aquitard is defined as the first 2 ft-thick clay below the water table, or below 5 ft in the case of a shallow aquifer.

If the well is to be installed in a lower, confined aquifer:

- Penetrations of aquifers located lower than the water table aquifer will be limited to avoid cross-contamination.
- Placement of new upper confined aquifer wells will be initially limited to those areas where contamination has been confirmed.
- The location of upper confined aquifer wells will be based upon the findings of the water table aquifer investigation. Areas of known contamination will be targeted for installing upper confined aquifer wells for the purposes of delineating vertical contamination.

6. The contract technical oversight will also be contacted for guidance.

ED_004144A_00000101-00520

- Where possible, upper-confined aquifer wells will be located such that they afford triangulation with other wells within the same aquifer to allow for a determination of groundwater flow direction.

- Some upper-confined aquifer wells will be installed approximately 10-15 ft from water table wells to enable the accurate assessment of vertical hydraulic gradients. If the direction of groundwater flow is known, wells within a group will be located sidegradient of each other.

- The boring will be advanced until the base of the surficial aquifer is reached (Section 3.2).

- An outer, surface casing will be set 2-5 ft into the confining layer to minimize the potential for cross-contamination from the unconfined aquifer during drilling activities.

- The surface casing will be driven into the confining bed and grouted into place. Grout will be tremied into the annulus around the outside of the casing to within 5 ft of the ground surface. A grout plug at least 2 ft thick will be tremied into the bottom of the surface casing. The grout will be permitted to cure for 24 hours. All drilling fluids within the surface calling will then be removed, and the casing will be flushed with clean potable water.

- The drilling equipment will be decontaminated, a smaller bit or auger selected, and the hole will be continued through the grout plug into the confined aquifer.

- If deeper aquifers are to be screened, repeat preceding steps until total depth is reached.

If dense non-aqueous phase liquid (DNAPL) contamination is detected during drilling, the well will be terminated and completed at the base of the aquifer. Drilling will not continue through the confining unit.

Stainless steel screens will be used in DNAPL wells. Screen size selection will be according to criteria set forth in Section 3.4. The formation grain size will be multiplied by the higher factor (6) to determine filter pack grain size. This will ensure that the filter pack is sufficiently coarse to permit DNAPL to pass freely from the formation into the coarser filter pack, then into the open well (Cohen and Mercer 1993).

DNAPL sampling cups are prohibited. The well screen will be capped, and set 0.3 ft (0.5 ft max.) into the top of the confining bed and rest on the bottom of the hole or bentonite backfill (if used). No sand will be placed below the screen. The remainder of the well installation and completion will be accomplished according to Section 3.4.

ED_004144A_00000101-00521

3.3 LOGGING

All borings for monitoring wells will be logged by a geologist. Logs will be recorded in a field logbook and/or a boring log. If the information is recorded in a logbook, it will be transferred to Boring Log Forms on a daily basis. Field notes are to include, as a minimum:

- Boring number
- Material description (as discussed below)
- Weather conditions
- Evidence of contamination
- Water conditions (including measured water levels)
- Daily drilling footage and quantities (for billing purposes)
- Notations on man-placed materials
- Drilling method and borehole diameter
- Any deviations from established field plans
- Blow counts for standard penetration tests
- Core and split-spoon recoveries.

Material description for soil samples must include:

- Classification
- Unified Soil Classification symbol
- Secondary components and estimated percentages
- Color
- Plasticity
- Consistency
- Density
- Moisture content
- Texture/fabric/bedding and orientation
- Grain angularity
- Depositional environment and formation
- Incidental odors
- Photoionization detector reading(s)
- Staining.

Material description for rock samples must include:

- Classification
- Lithologic characteristics
- Bedding/banding characteristics
- Color
- Hardness
- Degree of cementation
- Texture
- Structure and orientation

ED_004144A_00000101-00522

- Degree of weathering
- Solution or void conditions
- Primary and secondary permeability
- Sample recovery
- Incidental odors
- Photoionization detector reading(s)
- Staining.

3.4 WELL CONSTRUCTION AND INSTALLATION

After the hole is drilled and logged, backfill hole as required for proper screen placement. The integrity of the aquitard will be restored by placing a bentonite plug of an appropriate thickness, either to the top of the aquitard (normal well installation) or to within 0.3 ft of the top of the aquitard (DNAPL well). Aquifer fill will be clean filter pack.

Normal screen placement for the water table (surficial) aquifer will be within 2 ft of the screen extending above the static water level. The bottom of the screen will rest no more than 6 in. from the bottom of the hole or backfill material, whichever is applicable.

NOTE: The end cap in DNAPL wells will rest on the bottom of the bottom of the hole, or bentonite backfill if applicable (Section 3.2).

Screen placement for a confined aquifer well will normally be at the top of the confined aquifer.

Screen lengths will not normally exceed 10 ft. If it appears advantageous in a given situation (e.g., to screen an entire aquifer which is thicker than 10 ft), approval must be sought on a case-by-case basis from the appropriate regulatory agency. Otherwise, wells will be screened as follows:

Thickness of Aquifer	Action
<10 ft	Screen entire aquifer
>10 ft <30 ft	Screen top 10 ft consider vertically nested well cluster
>30 ft	Install vertically nested well cluster

The installation of monitoring wells in uncased or partially cased holes will begin within 12 hours of completion of drilling, or if the hole is to be logged, within 12 hours of well logging, and within 48 hours for holes fully cased with temporary drill casings. Once installation has begun, work will continue until the well has been grouted and the drill casing has been removed.

Well screens, casings, and fittings will conform to National Sanitation Foundation Standard 14 or ASTM equivalent for potable water usage. These materials will bear the appropriate rating logo. If the logos are not present, a written statement from the manufacturer/supplier stating that the materials contain the appropriate rating must be obtained. Material used will be new and essentially chemically inert to the site environment.

ED_004144A_00000101-00523

Well screen and casing should be inert with respect to the groundwater; therefore, the selection of screen and casing material will be based on select field tests of aquifer chemistry and potential contaminants. The screen will be capped without sediment trap or DNAPL sampling cup, and lowered into the hole. The well casing will be pre-cut to extend 2-2.5 ft above ground surface. Prior to placement of the last piece of well casing, a notch or other permanent reference point will be cut, filed, or scribed into the top edge of the casing.

Screen slot size will be appropriately sized to retain 90-100 percent of the filter pack material, the size of which will be determined by sieve analysis of formational material (Section 3.4).

The tops of all well casing will be capped with covers composed of materials compatible with the products used in the well installation. Caps may either be vented, or a telescopic fit, constructed to preclude binding to the well casing caused by tightness of fit, unclean surfaces, or weather conditions. In either case, it should be secure enough to preclude the introduction of foreign material into the well, yet allow pressure equalization between the well and the atmosphere.

Filter pack material will be placed, lightly tamped, and leveled. Filter pack will extend from the bottom of the hole to a height of 1-2 ft above the top of the screen. The filter pack will be capped with a minimum of 1 ft of fine (Ottawa) sand to prevent the bentonite seal from infiltrating the filter pack. If the bentonite seal is placed as a slurry, a minimum of 2 ft of fine sand will be required.

If the hole is less than 20-ft deep, the filter pack may be poured into the annulus directly. If the hole is deeper than 20 ft, the filter pack must be tremied into place.

Granular filter packs will be chemically and texturally clean, inert, and siliceous.

Filter pack grain size will be based on formation grain-size analysis. The D30 (70 percent retained) sieve size multiplied by a factor of not less than 3 nor greater than 6 will be used to determine the appropriate grain size.

Calculations regarding filter pack volumes will be entered into the Field Logbook along with any discrepancies between calculated and actual volumes used. If a discrepancy of greater than 10 percent exists between calculated and actual volumes exists, an explanation for the discrepancy will also be entered in the Field Logbook.

Bentonite seals will be no less than 2-ft thick nor more than 5-ft thick as measured immediately after placement. The normal installation will include a 5-ft seal. Thinner seals may be used in special cases. The final depth to the top of the bentonite seal will be measured and recorded.

ED_004144A_00000101-00524

3.4.1 Grout

Grout used in construction will be composed by weight of:

- 20 parts cement (Portland cement, type II) (see previous table)
- 0.4-1 part (maximum) (2-5 percent) bentonite
- 8-gal (maximum) approved water per 94-lb bag of cement.

Neither additives nor borehole cuttings will be mixed with the grout. Bentonite will be added after the required amount of cement is mixed with the water.

All grout material will be combined in an aboveground container and mechanically blended to produce a thick, lump-free mixture. The mixed grout will be recirculated through the grout pump prior to placement. Grout placement will be performed using a commercially available grout pump and a rigid, side discharge tremie pipe.

The following will be noted in the Field Logbook: (1) calculations of predicted grout volumes; (2) exact amounts of cement, bentonite, and water used in mixing grout; (3) actual volume of grout placed in the hole; and (4) any discrepancies between calculated and actual volumes used. If a discrepancy of greater than 10 percent exists between calculated and actual volumes exists, an explanation for the discrepancy will also be entered in the Field Logbook.

Well protective casings will be installed around all monitoring wells on the following day as the initial grout placement around the well. Any annulus formed between the outside of the protective casing and the borehole will be filled to ground surface with cement.

The construction of each well will be depicted as built in a well construction diagram. The diagram will be attached to the boring log and will graphically denote:

- Screen location, length
- Joint location
- Granular filter pack
- Seal
- Grout
- Cave-in
- Centralizers
- Height of riser
- Protective casing detail.

3.5 MONITORING WELL COMPLETION

Assemble appropriate decontaminated lengths of pipe and screen. Make sure these are clean and free of grease, soil, and residue. Lower each section of pipe and screen into the borehole, one at a time, screwing each section securely into the section below it. No grease, lubricant, polytetrafluoroethelyne tape, or glue may be used in joining the pipe and screen sections.

ED_004144A_00000101-00525

If a well extends below 50 ft, centralizers will be installed at 50 ft and every 50 ft thereafter except within screened interval and bentonite seal. Centralizer material will be PVC, polytetrafluoroethelyne, or stainless steel. Determination of centralizer material will be based on the same criteria as screen and calling selection.

Cut the riser with a pipe cutter approximately 2-2.5 ft above grade. All pipe cuts MUST be square to ensure that the elevation between the highest and lowest point of the well casing is less than or equal to 0.02 ft Notch, file, or otherwise permanently scribe a permanent reference point on the top of the casing.

Torches and saws may not be used to cut the riser. Care must be taken that all filings or trimmings cut from the reference point fall outside the riser rather than into the well. **Under no circumstances will a permanent marker or paint pencil be used to mark the reference point**.

In some locations, safety requirements may mandate that a well be flush-mounted with no stick-up. If a flush-mounted well is required at a given location, an internal pressure cap must be used instead of a vented cap to ensure that rainwater cannot pool around the wellhead and enter the well through the cap.

When the well is set to the bottom of the hole, temporarily place a cap on top of the pipe to keep the well interior clean.

Place the appropriate filter pack (Section 3.4). Monitor the rise annulus with a weighted tape to assure that bridging is not occurring.

After the pack is in place, wait 3-5 minutes for the material to settle, tamp and level a capped PVC pipe, and check its depth weighted steel tape.

Add a 1-2 ft cap of fine-grained (Ottawa) sand to prevent infiltration of the filter pack by overlying bentonite seal. See Section 3.4 for guidance on appropriate thickness of fine sand layer.

Install the bentonite seal (2- to 5-ft thick) by dropping bentonite pellets into the hole gradually. If the well is deeper than 30 ft, a tremie pipe will be used to place either bentonite pellets or slurry. Tamp and level pellets. If the well is 30 ft, tamp with a capped PVC pipe, if >30 ft, tamping bay be accomplished with the weighted end of the tape. In either case, check the depth to the top of the seal with a weighted tape as above.

If the bentonite pellets are of poor quality, they may have a tendency to hydrate and swell inside the tremie pipe and bridge. This situation may be solved by the following procedure:

1. Use a different brand of pellets. Different brands may have longer hydration times.

ED_004144A_00000101-00526

2. Freeze the pellets[7]. Note that this will require a longer wait time to allow proper hydration after the pellets thaw.

3. Place the bentonite seal as a slurry using a side-discharge tremie pipe as though installing grout. Note (Section 3.4) this will require that a minimum of 2 ft of fine sand be placed as a cap on top of the filter pack material.

Wait for the pellets to hydrate and swell. Hydration times will be determined by field test or by manufacturer's instructions. Normally this will be 30-60 minutes. Document the hydration time in the field notebook. If the pellets are above the water level in the hole, add several buckets of clean water to the boring. Document the amount of water added to the hole.

Mix an appropriate cement-bentonite slurry (Section 3.4). Be sure the mixture is thoroughly mixed and as thick as is practicable.

Lower a side discharge tremie pipe into the annulus to the level of the pellet seal.

Pump the grout slurry into the annulus while withdrawing the tremie pipe and temporary casing.

Stop the grout fill at 5 ft below the ground surface. Allow to cure for not less than 12 hours. If grout settles more than 6 in., add grout to bring level back up to within 5 ft of ground surface. Place approximately 2 ft of bentonite pellets (minimum 0.5 ft) in annulus. Seat the protective casing in the bentonite seal, allowing no more than 0.2 ft between the top of the well casing and the bottom of the protective casing cap. Fill inner annulus (between well casing and protective casing) with bentonite pellets to the level of the ground surface. Cover bentonite pellets with 1 ft of clean granular material (coarse sand or pea gravel filter pack). Fill the outer annulus (between the protective casing and the borehole) with neat cement. Allow the cement to mound above ground level and finish to slope away from the casing. Lock the cap.

— OR —

Continue the grout fill to the ground surface. Seat the protective casing in the grout, allowing no more than 0.2 ft between the top of the well casing and the bottom of the protective casing cap. Lock the cap.

— AND —

Allow the grout slurry to set overnight.

7. Bentonite pellets may be "flash-frozen" by brief immersion in liquid nitrogen (LN2). This can be accomplished by pouring LN2 over a small quantity (0.25-0.5 bucket) of pellets, allowing the LN2 to boil off, then pouring the pellets into the tremie pipe. **NOTE:** Use of LN2 is an additional jobsite hazard and must be addressed in the contractor's Health and Safety Plan. This contingency must be covered before drilling starts in order to avoid delays in well installation.

ED_004144A_00000101-00527

Fill the outer annulus (between the casing and the borehole) with neat cement. Allow the cement to mound above ground level and finish to slope away from the casing.

Slope the ground surface away from the casing for a distance of 2 ft, at a rate of no less than 1 in. in 2 ft. Surface this sloping pad with a geotextile mat covered by 3 in. of coarse gravel.

— OR —

Frame and pour a 4-ft square × 6-in. thick (4 ft × 4 ft × 6 in.) concrete pad centered around the protective casing.

— AND —

Set pre-painted protective steel pickets (3 or 4) evenly around and 4 ft out from well. These pickets will be set into 2 ft deep holes, the holes will then be filled with concrete; and if the pickets are not capped, they will also be filled with concrete.

3.6 WELL DEVELOPMENT

Well development is the process by which drilling fluids, solids, and other mobile particulates within the vicinity of the newly installed monitoring well have been removed while restoring the aquifer hydraulic conductivity. Development corrects any damage to or clogging of the aquifer caused by drilling, increases the porosity of the aquifer in the vicinity of the well, and stabilizes the formation and filter pack sands around the well screen.

Well development will be initiated after 48 consecutive hours but no longer than 7 calendar days following grouting and/or placement of surface protection.

Two well development techniques, over pumping and surging, will be employed in tandem. Over pumping is simply pumping the well at a rate higher than recharge. Surging is the operation of a plunger up and down within the well casing similar to a piston in a cylinder.

3.6.1 Materials Required

The following materials will be required for well development:

- Well Development Form
- Boring Log and Well Completion Diagram for the well
- Submersible pump or bailer of appropriate capacity, and surge block
- Conductivity, pH, ORP, turbidity, dissolved oxygen, and temperature meters
- Electric well sounder and measuring tape
- Containers for purged water, if required.

ED_004144A_00000101-00528

3.6.2 Summary of Procedures and Data Requirements

Pump or bail the well to ensure that water flows into it, and to remove some of the fine materials from the well. Removal of a minimum of one equivalent volume is recommended at this point. The rate of removal should be high enough to stress the well by lowering the water level to approximately half its original level. If well recharge exceeds 15 gpm, the requirement to lower the head will be waived.

Slowly lower a close-fitting surge block into the well until it rests below the static water level, but above the screened interval. (NOTE: This latter is not required in the case of a light non-aqueous phase liquid well.)

Begin a gentle surging motion which will allow any material blocking the screen to break up, go into suspension, and move into the well. Continue surging for 5-10 minutes, remove surge block, and pump or bail the well, rapidly removing at least one equivalent volume.

Repeat previous step at successively lower levels within the well screen until the bottom of the well is reached. Note that development should always begin above, or at the top of, the screen and move progressively downward to prevent the surge block from becoming sand locked in the well casing. As development progresses, successive surging can be more vigorous and of longer duration as long as the amount of sediment in the screen is kept to a minimum.

Development is expected to take at least 2 hours in a small well installed in a clean sand, and may last several days in large wells, or in wells set in silts with low permeabilities.

Development will continue until little or no sediment can be pulled into the well, and target values for parameters listed below are met.

At a minimum, development will remove 3-5 well volumes of water. One development volume (DV) is defined as (1) equivalent volume, plus (1) the amount of fluid lost during drilling, plus (1) the volume of water used in filter pack placement.

1. Monitor water quality parameters before beginning development procedures, and after removing 2, 2.5, and 3 well volumes of water.

2. If these parameters have stabilized over the three readings, the well will be considered developed.

3. If the parameters have not stabilized after these three readings, continue pumping the well to develop, but stop surging. Monitor the stabilization parameters every half DV.

4. When the parameters have stabilized over three consecutive readings at half DV intervals, the well will be considered developed.

ED_004144A_00000101-00529

All water removed must be disposed of as directed by the Work Plan.

Record all data as required on a Well Development Record Form (Appendix A), which is made a part of the complete Well Record. These data include:

- Depths and dimensions of the well, casing, and screen obtained from the well diagram.
- Water losses and uses during drilling, obtained from the boring log for the well.
- Measurements of the following indicator parameters: turbidity, pH, conductivity, ORP potential, dissolved oxygen, and temperature.
- Target values for the indicator parameters listed above are as follows: pH – stabilize, conductivity – stabilize, ORP – stabilize, dissolved oxygen –- stabilize, temperature – stabilize, turbidity – 5 nephelometric turbidity units or stabilize. A value is considered to have stabilized when three consecutive readings taken at half DV intervals are within 10 percent of each other.
- Notes on characteristics of the development water.
- Data on the equipment and technique used for development.
- Estimated recharge rate and rate/quantity of water removal during development.

4. MAINTENANCE

Not applicable.

5. PRECAUTIONS

Refer to the site-specific Health and Safety Plan for discussion of hazards and preventive measures during well development activities.

6. REFERENCES

Aller, L. et al. 1989. Handbook of Suggested Practices for the Design and Installation of Groundwater Monitoring Wells, National Water Well Association.

American Society for Testing and Materials (ASTM). D2487-92 Standard Classification of Soils for Engineering Purposes (Unified Soil Classification System).

ED_004144A_00000101-00530

———. D5092-90 Standard Practice for Design and Installation of Groundwater Monitoring Wells in Aquifers.

Cohen, R.M. and J.W. Mercer. 1993. DNAPL Site Evaluation, CRC Press, Inc.

Nielsen, D.M. 1993. Correct Well Design Improves Monitoring, in *Environmental Protection*, Vol.4, No.7. July.

U.S. Army Toxic and Hazardous Materials Agency. 1987. Geotechnical Requirements for Drilling, Monitoring Wells, Data Acquisition and Reports. March.

U.S. Environmental Protection Agency. 1989. Groundwater Handbook.

ED_004144A_00000101-00531

This page intentionally left blank

ED_004144A_00000101-00532

Appendix A

Field Record of Well Development Form

This page intentionally left blank

FIELD RECORD OF WELL DEVELOPMENT

Project Name:	Project No:	Date:
EA Personnel:	Development Method:	
Weather/Temperature/Barometric Pressure:		Time:

Well No.:	Well Condition:
Well Diameter:	Measurement Reference:
Well Volume Calculations	
A. Depth To Water (ft):	D. Well Volume/ft:
B. Total Well Depth (ft):	E. Total Well Volume (gal)[C*D]:
C. Water Column Height (ft):	F. Five Well Volumes (gal):

Parameter	Beginning	1 Volume	2 Volumes	3 Volumes	4 Volumes	5 Volumes
Time (min)						
Depth to Water (ft)						
Purge Rate (gpm)						
Volume Purged (gal)						
pH						
Temperature (°F)						
Conductivity (µmhos/cm)						
Dissolved Oxygen						
Turbidity (NTU)						
ORP (mV)						

Parameter	6 Volumes	7 Volumes	8 Volumes	9 Volumes	10 Volumes	End
Time (min)						
Depth to Water (ft)						
Purge Rate (gpm)						
Volume Purged (gal)						
pH						
Temperature (°F)						
Conductivity (µmhos/cm)						
Dissolved Oxygen						
Turbidity (NTU)						
ORP (mV)						

NOTE: NTU = Nephelometric turbidity unit.
ORP = Oxidation-reduction potential.

COMMENTS AND OBSERVATIONS: _____

FIELD RECORD OF WELL DEVELOPMENT

Project Name:	Project No:	Date:
EA Personnel:	Development Method:	
Weather/Temperature/Barometric Pressure:		Time:

Well No.:	Well Condition:
Well Diameter:	Measurement Reference:

Parameter	Beginning	1 Volume	2 Volumes	3 Volumes	4 Volumes	5 Volumes
Time (min)						
Depth to Water (ft)						
Purge Rate (gpm)						
Volume Purged (gal)						
pH						
Temperature (°F)						
Conductivity (µmhos/cm)						
Dissolved Oxygen						
Turbidity (NTU)						
ORP (mV)						

Parameter	6 Volumes	7 Volumes	8 Volumes	9 Volumes	10 Volumes	End
Time (min)						
Depth to Water (ft)						
Purge Rate (gpm)						
Volume Purged (gal)						
pH						
Temperature (°F)						
Conductivity (µmhos/cm)						
Dissolved Oxygen						
Turbidity (NTU)						
ORP (mV)						

Standard Operating Procedure No. 020
for
Active Soil Gas Sampling

Prepared by

EA Engineering, Science, and Technology, Inc., PBC
225 Schilling Circle, Suite 400
Hunt Valley, Maryland 21031

Revision 0
December 2014

This page intentionally left blank

CONTENTS

Page

1. SCOPE AND APPLICATION 1

2. MATERIALS 1

3. PROCEDURES 1

   3.1 Soil Gas Point Installation 1
   3.2 Soil Gas Sample Collection Using Tedlar Bags 2

4. MAINTENANCE 3

5. FIELD QUALITY CONTROL MEASURES 3

6. REFERENCES 3

ED_004144A_00000101-00539

This page intentionally left blank

ED_004144A_00000101-00540

1. SCOPE AND APPLICATION

The purpose of this Standard Operating Procedure is to provide guidelines for soil gas sampling. A soil gas survey is an effective screening tool in locating areas contaminated with volatile organic compounds.

2. MATERIALS

The following materials may be required:

1-L Tedlar bags	Probe set, including probe jack
3/16-in. outer diameter polyethylene tubing	Rotary hammer with 1 × 36-in. drill bit
Clean sand	Sample labels
Disposable shield points	Tools: vise grips, 0.75-in. wrench, scissors
Extension cord	Two measuring cups
Portable generator or other power source	Tygon tubing for vacuum box
Powdered bentonite	Vacuum box and vacuum pump

3. PROCEDURES

3.1 SOIL GAS POINT INSTALLATION

Installation of soil gas points includes the following steps:

1. Assemble clean probe sections to the desired sampling depth.

2. Cut polyethylene tubing to at least 1 ft longer than the depth of the hole.

3. Insert one end of the tubing approximately 0.25-in. inside of aluminum shield point. Crimp the shield point tightly around the tubing with vise grips and insert the tube and shield point inside of the clean KV probe.

4. Using rotary drill and 36-in. drill bit, bore down 30 in. at the desired depth for sampling. Be sure to clear the hole well so that soil does not fall back into hole.

5. Drive stainless steel probe and attached shield point and polyethylene tubing down the hole with a rotary hammer to approximately 4 ft, or above the saturation zone. (It is desired to obtain a sample of the soil gas, not the groundwater.) If samples are needed from greater than 4 ft, drive the steel probe with a solid tip to the desired depth, extract, and insert a probe fitted with a disposable shield point and tubing.

6. Extract the probe by hand or with the jack. Be sure that shield point and tubing stays in the ground and attached to the shield point.

ED_004144A_00000101-00541

7. Pour 0.5 cup of sand down sampling hole. Gently shake the tubing to ensure that the sand settles and no bridged spaces remain.

8. Pour 0.5 cup bentonite down sampling hole, add 0.25 cup distilled water, add another 0.5 cup bentonite down hole, and another 0.25 cup water. Continue until bentonite seal reaches the surface.

9. Allow at least 20 minutes before extracting sample.

10. Collect sample (Section 3.2).

11. Remove probe and backfill hole with bentonite.

3.2 SOIL GAS SAMPLE COLLECTION USING TEDLAR BAGS[1]

The following steps summarize the collection of a soil gas sample using Tedlar bags:

1. Cut at least 1 in. off the end of the tubing to ensure a clean sample.

2. Attach tubing to the vacuum box and pump.

3. Open valve on a clean, dry Tedlar bag, and attach inside the vacuum box.

4. Close the vacuum box, close stopcock (3-way valve) between vacuum box and pump, and then turn the pump on.

5. Allow Tedlar bag to fill 90 percent (do not overfill bag), shut off, crimp Tygon tubing (to prevent release of sample back down hole), open stopcock, and remove Tedlar bag from box.

   — If the bag is filled with air only, squeeze the air out completely to purge air that was in the tubing and sand and reattach inside the box. Repeat Bullets 4 and 5. Close the valve on the Tedlar bag upon removal, label it accordingly, and put it in a cool, dark area. NOTE: Not so cool as to cause condensation.

   — If Tedlar bag is filled with water and air, be sure to close valve on Tedlar bag before removing it, label the bag accordingly, and put it in a cool, dark area. NOTE: Not so cool as to cause condensation.

   — If water is pulled into the Tedlar bag, Tygon tubing inside the vacuum box must be replaced.

1. Summa canisters are also acceptable and are generally used for projects requiring analytical data with a lower detection limit. An equivalent standard operating procedure for Summa canisters and offsite analysis will be submitted prior to sampling.

ED_004144A_00000101-00542

6. Remove and decontaminate probes.

7. Repeat the above procedures for each additional soil gas point.

4. MAINTENANCE

No maintenance required.

5. FIELD QUALITY CONTROL MEASURES

To ensure that the equipment is free of volatile contaminants, collect at least two quality control samples per day by drawing uncontaminated air through an unused representative sampling apparatus (assembled shield point and tubing). One sample should be taken at the beginning of the day, prior to collecting any samples, the other at the end of the day, after decontaminating the equipment. Ambient air may usually be assumed to be uncontaminated. If site ambient air is assumed to be contaminated, it should be sampled for contaminant levels.

To ensure that the analyzed samples are representative of the collected samples, and that he Tedlar bags are not losing volatile samples, spiked samples of known volatile concentration will be prepared. These samples will be stored and handled in the same manner as other field samples. Spiked samples will be the first collected and last analyzed. Selected low level samples should also be duplicated at a different time and analyzed immediately to verify that analyte loss is not occurring. Alternatively, samples may be analyzed in the field, using either Tedlar bags or syringe samplers to collect and transport the samples to the gas chromatograph.

Note sampling times for each sample in field notebook and on sample bag (if bags are used). No more that 4 hours should elapse between sampling and analysis; 15 minutes is preferable.

6. REFERENCES

American Society for Testing and Materials. D5314-93 Standard for Soil Gas Monitoring in the Vadose Zone.

Posner, J.C. and J. Woodfin. 1986. Sampling with Gas Bags I: Losses of Analyte with Time; Applied Industrial Hygene. November. pp. 163-168.

ED_004144A_00000101-00543

This page intentionally left blank

ED_004144A_00000101-00544

Standard Operating Procedure No. 021
for
Sediment Sampling

Prepared by

EA Engineering, Science, and Technology, Inc., PBC
225 Schilling Circle, Suite 400
Hunt Valley, Maryland 21031

Revision: 1
December 2014

This page intentionally left blank

CONTENTS

Page

1. SCOPE AND APPLICATION 1

2. PROCEDURES 1

3. GENERAL PROCEDURES 1

4. CORERS 3

5. SCOOPS AND SPOONS 3

6. DREDGES 4

   6.1 Peterson and Ponar Dredges 4
   6.2 Eckman Dredge 4

7. REFERENCES 4

ED_004144A_00000101-00547

This page intentionally left blank

ED_004144A_00000101-00548

1. SCOPE AND APPLICATION

This Standard Operating Procedure (SOP) delineates protocols for sampling sediments from streams, rivers, ditches, lakes, ponds, lagoons, and marine and estuarine systems.

EA recognizes that other protocols have been developed that meet the criteria of quality and reproducibility. Clients may have their own sediment sampling protocols which may contain methodologies and procedures that address unique or unusual site-specific conditions or may be in response to local regulatory agency requirements. In such cases, EA will compare its and the client's protocols. The goal is to provide the client with the most quality; therefore, if the client's protocols provide as much or more quality assurance than EA's protocols for the particular site or project, EA will adopt those particular protocols and this SOP will be superseded in those respects. If EA is required to implement the client's protocols in lieu of EA's protocols, EA will make the client formally aware of any concerns regarding differences in protocols that might affect data quality and will document such concerns in the project file.

2. PROCEDURES

The water content of sediment varies. Sediments range from soft to dense and fine to rocky. A variety of equipment may be necessary to obtain representative samples, even at a single site. Factors to consider in selecting the appropriate sampling equipment include sample location (edge or middle of the waterbody), depth of water and sediment, grain size, water velocity, and analytes of interest.

3. GENERAL PROCEDURES

1. Surface water and sediment samples are to be collected at the same location (if both are required in the project-specific Sampling and Analysis Plan).

2. Collect the surface water sample first. Sediment sampling usually results in disturbance of the sediments, which may influence the analytical results of the surface water samples.

3. Wear gloves when collecting samples. Comply with the Health and Safety Plan specifications for proper personal protective equipment.

4. If sampling from a boat or near waterbodies with depths of 4 ft or more, the sampling team will wear life jackets.

5. Wading into a waterbody disturbs the sediment. Move slowly and cautiously, approach the sample location from downstream. If flow is not strong enough to move entrained particles away from the sample location, wait for the sediment to resettle before sampling.

ED_004144A_00000101-00549

6. Collect samples first from areas suspected of being the least contaminated, thus minimizing the risk of cross-contamination.

7. Collecting samples directly into sample containers is not recommended. Sediment samples should be placed in Teflon®, stainless steel, or glass trays, pans, or bowls for sample preparation.

8. Use the proper equipment and material construction for the analytes of interest. For example, for volatile organic compound analysis, the sampling material in direct contact with the sediment or surface water must consist of Teflon, polyethylene, or stainless steel.

9. Refer to EA SOP No. 005 (Field Decontamination) for proper decontamination methods before and after sampling and between samples.

10. Collect samples for volatile organic compound analysis first. Do not mix such samples before placing them in the sample containers. For composite volatile organic compound samples, place equal aliquots of each subsample in the sample container.

11. Sediment that will be analyzed for other than volatile organic compounds should be prepared as follows:

    - Place the sediment in a mixing container.
    - Divide the sediment into quarters.
    - Mix each quarter separately and thoroughly.
    - Combine the quarters and mix thoroughly.
    - For composite samples, mix each subsample as described above. Place equal aliquots of each subsample in a mixing container and follow the procedure described above.

12. Mark the sampling location on a site map. Record sampling location coordinates with a Global Positioning System unit, photograph (optional, recommended) and describe each location, and place a numbered stake above the visible high water mark on the bank closest to the sampling location. The photographs and description must be adequate to allow the sampling station to be relocated at a future date.

13. Dispose of investigation-derived wastes according to applicable rules and regulations.

4. CORERS

ED_004144A_00000101-00550

A corer provides a vertical profile of the sediment, which may be useful in tracing historical contaminant trends. Because displacement is minimal, a corer is particularly useful when sampling for trace metals and organics. Corers can be constructed out of a variety of materials.

For example, a 2-in. diameter polyvinyl chloride pipe with a Teflon or polyethylene liner can be lowered into the sediment; a 2-in. diameter well cap can be used to form an airtight seal and negative pressure as the pipe is withdrawn.

- Ensure that the corer and (optional) liner are properly cleaned.
- Stand downstream of the sample location.
- Force the corer into the sediment with a smooth continuous motion. Rotate (not rock) the corer if necessary to penetrate the sediment.
- Twist the corer to detach the sample; then withdraw the corer in a single smooth motion. If the corer does not have a nosepiece, place a cap on the bottom to keep the sediment in place.
- Remove the top of the corer and decant the water (into appropriate sample containers for surface water analysis, if required).
- Remove the nosepiece or cap and deposit the sample into a stainless steel, Teflon, or glass tray.
- Transfer the sample into sample containers using a stainless steel spoon (or equivalent device).

5. SCOOPS AND SPOONS

When sampling at the margins of a waterbody or in shallow water, scoops and spoons may be the most appropriate sampling equipment. For collecting samples several feet from shore or in deeper water, the scoop or spoon may be attached to a pole or conduit.

- Stand downstream of the sample location.
- Collect the sample slowly and gradually to minimize disturbing the fine particles.
- Decant the water slowly to minimize loss of fine particles.
- Transfer the sediment to sample containers or mixing trays, as appropriate.

ED_004144A_00000101-00551

6. DREDGES

Three types of dredges are most frequently used: Peterson, Ponar, and Eckman. Many other dredge types are available; their applicability will depend upon site-specific factors.

6.1 PETERSON AND PONAR DREDGES

These dredges are suitable for hard, rocky substrates, deep waterbodies, and streams with fast currents. Ponars have top screens and side plates to prevent sample loss during retrieval.

- Open the jaws and place the cross bar into the proper notch.
- Lower the dredge to the bottom, making sure it settles flat.
- When tension is removed from the line, the cross bar will drop, enabling the dredge to close as the line is pulled upward during retrieval.
- Pull the dredge to the surface. Make sure the jaws are closed and that no sample was lost during retrieval.
- Open the jaws and transfer the sediment to sample containers or to a mixing tray.

6.2 ECKMAN DREDGE

The Eckman dredge works best in soft substrates in waterbodies with slow or no flow.

- Open the spring-loaded jaws and attach the chains to the pegs at the top of the sampler.
- Lower the dredge to the bottom, making sure it settles flat.
- Holding the line taut, send down the message to close the jaws.
- Pull the dredge to the surface. Make sure the jaws are closed and that no sample was lost during retrieval.
- Open the jaws and transfer the sediment to sample containers or a mixing tray.

7. REFERENCES

None.

ED_004144A_00000101-00552

Standard Operating Procedure No. 022
for
Sediment and Benthic Macroinvertebrate Sampling with Eckman Grab

Prepared by

EA Engineering, Science, and Technology, Inc., PBC
225 Schilling Circle, Suite 400
Hunt Valley, Maryland 21031

Revision 0
December 2014

This page intentionally left blank

CONTENTS

Page

1. SCOPE AND APPLICATION 1
2. MATERIAL 1
3. PROCEDURES 1
4. MAINTENANCE 2
5. PRECAUTIONS 2
6. REFERENCES 3

ED_004144A_00000101-00555

This page intentionally left blank

ED_004144A_00000101-00556

1. SCOPE AND APPLICATION

This Standard Operating Procedure covers the protocol for obtaining qualitative or quantitative samples of soft sediments and macroinvertebrates inhabiting soft sediments in lakes, reservoirs, and other waterbodies. The Eckman grab sampler is well suited to collecting samples in deeper (up to 100 ft) waterbodies.

Use of brand names in this Standard Operating Procedure is not intended as endorsement or mandate that a given brand be used. Alternate equivalent brands of detectors, sensors, meters, etc. are acceptable. If alternate equipment is to be used, the contractor will provide applicable and comparable standard operating procedures for the maintenance and calibration of same.

2. MATERIAL

The following materials may be required:

Eckman grab sampler: a box-shaped device with two scoop-like jaws	Sample containers
Boat	Sieve – 500 μ (U.S. Standard No. 30)
Personal protective equipment	Stainless steel spoon or trowel
Personal flotation devices	

3. PROCEDURES

The following is a summary of procedures on use of the Eckman grab sampler:

- Cock the sampler by raising each jaw upward into the cocked position using the attached able and secure the cable to the catch pin located at the top of the sampler.
- Once cocked, lift the sampler overboard and lower slowly but steadily to the bottom.
- Once on the bottom, indicated by a slack line, the weighted messenger is sent down the line tripping the catch mechanism, causing the spring loaded jaws to close the bottom of the sampler, containing the sediment.
- Raise the sample at a slow but steady rate to prevent sample loss or washout.
- Once the sample is on board, empty the sample into a stainless steel, polytetrafluoroethelyne, or polytetrafluoroethelyne-lined bowl or tray for processing.
  - If the sediment will be analyzed for volatile organic compounds, transfer the sample into the appropriate sample containers immediately.

ED_004144A_00000101-00557

- If the sediment will not be analyzed for volatile organic compounds, use Stainless steel spoon to thoroughly homogenize sample, then transfer sample into appropriate containers. Add preservative (if required) and place in ice-filled chest.

  — If benthic macroinvertebrates are to be collected, sieve sample and transfer macroinvertebrates into appropriate container.

- Thoroughly decontaminate the device.

4. MAINTENANCE

Maintain according to manufacturer's suggestions.

5. PRECAUTIONS

The following precautions should be taken while using an Eckman grab sampler:

- Inspect the device for mechanical deficiencies prior to its use.
- This sampler is inefficient in waters deeper than approximately 75-100 ft, under adverse weather conditions, and in waters of moderate to strong currents or wave action.
- Exercise caution at all times once the grab is loaded or cocked because a safety lock is not part of the standard design.
- Operate the sampler from a boat with a winch and cable.
- Wear gloves when collecting sediment samples. Be sure to consult the health and safety plan for the proper dermal and respiratory protection prior to collecting any samples.
- Higher levels of personal protective equipment may be required by the Health and Safety Plan.
- While sampling from a boat in waterbodies with a depth of 5 ft or more, the sampling team will wear personal flotation devices (life jackets).
- Collect samples first from those areas that are suspected of being the least contaminated, thus minimizing the risk of cross-contamination.

ED_004144A_00000101-00558

6. REFERENCES

American Society for Testing and Materials. Standard 2.1. D4387 Guide for Selecting Grab Sampling Devices for Collecting Benthic Macroinvertebrates.

U.S. Environmental Protection Agency. 1990. Macroinvertebrate Field and Laboratory Methods for Evaluating the Biological Integrity of Surface Waters. Office of Research and Development. EPA/600/4-90/030. November.

This page intentionally left blank

ED_004144A_00000101-00560

Standard Operating Procedure No. 023
for
Organic Vapor Analyzer

Prepared by

EA Engineering, Science, and Technology, Inc., PBC
225 Schilling Circle, Suite 400
Hunt Valley, Maryland 21031

Revision 0
December 2014

This page intentionally left blank

CONTENTS

Page

1. SCOPE AND APPLICATION 1

2. MATERIALS 1

3. PROCEDURES 1

   3.1 Operating Procedures 1
   3.2 Shut-Down Procedures 2
   3.3 Fuel Re-Filling 2
   3.4 Calibration 3
   3.5 Battery Charging 4

4. PRECAUTIONS 4

5. REFERENCES 4

ED_004144A_00000101-00563

This page intentionally left blank

ED_004144A_00000101-00564

1. SCOPE AND APPLICATION

The purpose of this Standard Operating Procedure is to delineate protocols for field operations with the organic vapor analyzer (OVA) (Foxboro Model 128 GC). The OVA is an intrinsically safe, flame ionization detector designed to detect and measure organic vapor concentrations by producing a response to an unknown sample, which can be related to a gas of known composition to which the instrument has previously been calibrated. This information is used to determine control measures such as protection and action levels.

Use of brand names in this Standard Operating Procedure is not intended as endorsement or mandate that a given brand be used. Alternate equivalent brands of detectors, sensors, meters, etc. are acceptable. If alternate equipment is to be used, the contractor will provide applicable and comparable standard operating procedures for the maintenance and calibration of same.

2. MATERIALS

The following materials may be required:

Probe/readout assembly	Fuel (zero grade hydrogen - 99.999 percent)
Sidepack assembly	Tygon tubing
Tedlar bag	Regulator
Calibration gas (e.g., methane 90-100 ppm)	

3. PROCEDURES

3.1 OPERATING PROCEDURES

- Connect the Probe/Readout Assembly to the Sidepack Assembly by attaching the sample line and the electronic jack to their respective receptacles located on the side of the Sidepack.

- Check the battery condition by moving the INSTRUMENT toggle switch to the "BATT." position and ensure that the meter needle is beyond the white BATTERY OK line.

- Move the INSTRUMENT toggle switch to the ON position, and allow a 5-minute warm-up.

- Adjust the CALIBRATION ADJUST knob to set the meter needle to the level desired for activating the audible alarm. If the alarm level is other than zero, the CALIBRATION range toggle switch must be set to the appropriate range (i.e., X1, X10, or X100).

- Turn the ALARM VOLUME knob fully clockwise.

ED_004144A_00000101-00565

- Using the ALARM LEVEL ADJUST knob (located on the back of the Probe/Readout Assembly), turn the knob until the audible alarm is activated.

- Move the CALIBRATION range toggle switch to the X1 position and adjust the meter reading to zero using the CALIBRATION ADJUST knob.

- Turn the PUMP toggle switch ON. Place the instrument in the vertical position. Observe the SAMPLE FLOW RATE tube. Ensure flow rate is between 1.5 and 2.5 units.

- Open the H2 TANK valve and the H2 SUPPLY valve; wait 1 minute for hydrogen to purge the system.

- Press the red IGNITER BUTTON (located on the side of the Sidepack Assembly) until the alarm sounds and the needle on the Probe/Readout Assembly jumps upscale. CAUTION: THE IGNITER BUTTON SHOULD NOT BE DEPRESSED FOR MORE THAN 8 SECONDS. IF FLAME DOES NOT LIGHT WITHIN 8 SECONDS, WAIT 1 MINUTE AND TRY AGAIN.

- The instrument is ready for use. Use the CALIBRATION ADJUST knob to zero out ambient background organics.

3.2 SHUT-DOWN PROCEDURES

- Close H2 TANK VALVE
- Close H2 SUPPLY VALVE
- Move "INSTRUMENT" BATT/OFF/ON toggle switch to OFF.
- Wait 5 seconds and move the "PUMP" toggle switch to OFF.

3.3 FUEL RE-FILLING

WARNING: THERE SHOULD BE NO POTENTIAL IGNITERS OR FLAMES IN THE AREA.

- The instrument and charger should be completely shut down prior to hydrogen tank refilling operations. Refilling should be done in a well ventilated non-hazardous area.

- If this is the first filling of the instrument or if the filling hose has been allowed to fill with air, the filling hose should be purged with hydrogen prior to filling the instrument tank.

- The filling hose should be left attached to the hydrogen supply tank when possible. Ensure that the FILL/BLEED valve on the instrument end of the hose is in the OFF position. Connect the hose to the refill connection on the Sidepack Assembly.

ED_004144A_00000101-00566

- Open the hydrogen supply bottle valve slightly. Open the H2 REFILL VALVE and the H2 TANK VALVE on the instrument and place the FILL/BLEED valve on the filling hose assembly to the FILL position.

- After the fuel tank is filled, close the H2 REFILL VALVE on the instrument, close the FILL/BLEED valve on the refill hose, and close the valve on the hydrogen supply bottle.

- The hydrogen trapped in the refill hose must now be bled off. CAUTION: THE REFILL HOSE WILL CONTAIN A SIGNIFICANT AMOUNT OF HYDROGEN AT HIGH PRESSURE. Turn the FILL/BLEED valve on the filling hose to the BLEED position. After the hose is bled down to atmospheric pressure, the FILL/BLEED valve should be turned to the FILL position to allow the hydrogen trapped in the connector fittings to move into the hose assembly. Turn the FILL/BLEED valve to the BLEED position and exhaust the trapped hydrogen. Then turn the FILL/BLEED valve to the OFF position to keep the remaining hydrogen in the hose at one atmosphere to ensure no air will be trapped in the hose for the next filling.

- Close the H2 TANK VALVE.

- Observe the H2 TANK PRESSURE meter and ensure that the pressure reading does not decrease rapidly.

3.4 CALIBRATION

Field calibration is accomplished using a single known sample of methane in air in the range of 90-100 ppm. This may not provide the accuracy stated under specifications but is adequate for field survey work. The following summarizes calibration procedures:

- Place instrument in normal operation with the CALIBRATION range toggle switch set to X10 and the GAS SELECT KNOB SET TO 300.

- Use the "CALIBRATION" ADJUST knob to adjust the meter reading to zero.

- Fill a Tedlar bag with methane sample of known concentration (between 90 and 100 ppm) and connect to the OVA sample probe.

- Adjust the CALIBRATION GAS SELECT KNOB until the meter reading is equivalent to the value of the gas standard.

- Record in a field log book: date, time, location, instrument identification number, calibration gas and concentration, final GAS SELECT setting, and the name of the person calibrating the instrument.

ED_004144A_00000101-00567

3.5 BATTERY CHARGING

WARNING: NEVER CHARGE BATTERY IN A HAZARDOUS ENVIRONMENT

- Insert battery charger cable into the battery pack RECHARGER receptacle. Plug battery charger into 115 VAC outlet.
- Turn battery charger on.
- Approximately 1 hour of charging is required for each hour of use, however, an overnight charge is recommended. The charger can be left on indefinitely without damage to the batteries. When finished, turn the charger off and disconnect the charger from the battery.

4. PRECAUTIONS

The following precautions should be exercised while using the OVA:

- Keep battery on charger when not in use, and recharge battery as soon as possible after use.
- Avoid intake of boiling vapors and liquids.
- Avoid over-tightening of valves.
- Use zero grade H2 (99.999 percent, certified total hydrocarbons as methane <0.5 ppm recommended).
- Calibration gas mixture must be balanced in air.
- Do not over tighten valves.

5. REFERENCES

Foxboro OVA 128 Reference Manual. 1985. December.

ICF Field Equipment Manual. 1988. November.

ED_004144A_00000101-00568

Standard Operating Procedure No. 024
for
Photoionization Detector (Microtip HL-200)

Prepared by

EA Engineering, Science, and Technology, Inc., PBC
225 Schilling Circle, Suite 400
Hunt Valley, Maryland 21031

Revision 0
December 2014

This page intentionally left blank

CONTENTS

Page

1. SCOPE AND APPLICATION 1
2. MATERIALS 1
3. STARTUP/ CALIBRATION PROCEDURE 1
4. BATTERY CHARGING 2
5. PRECAUTIONS 2
6. REFERENCES 3

ED_004144A_00000101-00571

This page intentionally left blank

ED_004144A_00000101-00572

1. SCOPE AND APPLICATION

The purpose of this Standard Operating Procedure is to delineate protocols for field operations with a photoionization detector (PID). PIDs use an ultraviolet emitting lamp designed to detect, measure, and display the total concentration of airborne ionizable gases and vapors. This information is used to determine control measures such as protection and action levels.

Use of brand names in this Standard Operating Procedure is not intended as endorsement or mandate that a given brand be used. Alternate equivalent brands of detectors, sensors, meters, etc. are acceptable. If alternate equipment is to be used, the contractor will provide applicable and comparable standard operating procedure for the maintenance and calibration of same.

2. MATERIALS

The following materials may be required:

Battery back	Regulator
Calibration gas (100ppm Isobutylene)	Tedlar bag
PID (i.e., Microtip HL-200)	Tygon tubing

3. STARTUP/CALIBRATION PROCEDURE

The following describes startup and calibration procedures:

- Turn the instrument on by pressing the back of the power switch located on the handle of the Microtip.
- The message "Warming up now, please wait" will be displayed for up to 3 minutes. After normal display appears, the Microtip is ready for calibration.
- Fill a Tedlar bag with the desired calibration gas (usually 100 ppm isobutylene).
- Press SETUP button and select the desired Cal Memory using the arrow keys (normally set to 200 ppm). Press EXIT button to leave setup function.
- Press CAL button and expose Microtip to Zero Gas. (Usually clean outdoor air will be suitable. If any doubt exists as to the cleanliness of the background air, a commercial source of zero gas should be used.).
- The Microtip then asks for the Span Gas concentration. Enter the known span gas concentration and then connect the Tedlar bag containing the Span Gas.

ED_004144A_00000101-00573

NOTE: THE SPAN GAS CONCENTRATION IS DEPENDENT UPON BOTH THE CONCENTRATION OF THE SPAN GAS USED AND THE RATING OF THE ULTRAVIOLET LAMP IN THE MICROTIP AT TIME OF CALIBRATION. IF USING 100 ppm ISOBUTYLENE AND THE STANDARD 10.6 eV LAMP, THE SPAN GAS CONCENTRATION WILL BE 56 ppm.

- Press enter and the Microtip sets its sensitivity. Once the display reverts to normal, the Microtip is calibrated and ready for use. Remove the Span Gas from the inlet probe. The instrument should be calibrated at least once a day.

4. BATTERY CHARGING

The following is a summary of battery charging procedures:

- Ensure Microtip is off.
- Set the voltage selector switch on the bottom of the battery charger to the appropriate AC line voltage.
- Press the release button on the bottom of the Microtip and remove the battery pack by sliding it backwards.
- Plug charger into the battery pack and then into an AC outlet and allow the battery to charge for at least 8 hours.
- After charging, remove the charger, first from the outlet then from the battery pack, and slide the battery pack back onto the Microtip.

5. PRECAUTIONS

The following is a summary of precautions while using the Microtip:

- Microtip does not carry an Intrinsic Safety Rating and must not be used in a hazardous location where flammable concentrations of gases or vapors are constantly present.
- All calibration, maintenance, and servicing of this device, including battery charging, must be performed in a safe area away from hazardous locations.
- Do not open or mutilate battery cells.
- Do not defeat proper polarity orientation between the battery pack and battery charger.
- Substitution of components may affect safety rating.

ED_004144A_00000101-00574

6. REFERENCES

Microtip HL-200 User's Manual. 1990. February.

ED_004144A_00000101-00575

This page intentionally left blank

ED_004144A_00000101-00576

Standard Operating Procedure No. 025
for
Soil Sampling

Prepared by

EA Engineering, Science, and Technology, Inc., PBC
225 Schilling Circle, Suite 400
Hunt Valley, Maryland 21031

Revision 0
December 2014

This page intentionally left blank

CONTENTS

Page

1. SCOPE AND APPLICATION 1

2. MATERIALS 1

3. PROCEDURE 1

   3.1 Subsurface Samples 1
   3.2 Surficial Soil Samples 2

4. MAINTENANCE 2

5. PRECAUTIONS 2

6. REFERENCES 2

ED_004144A_00000101-00579

This page intentionally left blank

ED_004144A_00000101-00580

1. SCOPE AND APPLICATION

The purpose of this Standard Operating Procedure is to delineate protocols for sampling surface and subsurface soils. Soil samples give an indication of the area and depth of site contamination, so a representative sample is very important.

2. MATERIALS

The following materials may be required:

Bucket auger or push tube sampler	Split-spoon, Shelby tube, or core barrel sampler
Drill rig and associated equipment	Stainless steel bowl
Personal protective equipment as required by the Health and Safety Plan	Stainless steel spoon, trowel, knife, spatula (as needed)

3. PROCEDURE

3.1 SUBSURFACE SAMPLES

Don personal protective equipment. Collect split-spoon, core barrel, or Shelby Tube samples during drilling. Upon opening sampler, or extruding sample, immediately screen soil for volatile organic compounds using either a photoionization detector or flame ionization detector. If sampling for volatile organic compounds, determining the area of highest concentration, use a stainless steel knife, trowel, or laboratory spatula to peel and sample this area. Log the sample in the Field Logbook while it is still in the sampler. Peel and transfer the remaining sample in a decontaminated stainless steel bowl. Mix thoroughly with a decontaminated stainless steel spoon or trowel. Place the sample into the required number of sample jars. Preserve samples as required. Discard any remaining sample into the drums being used for collection of cuttings. Decon sampling implements. All borings will be abandoned.

NOTE: If sample recoveries are poor, it may be necessary to composite samples before placing them in jars. In this case, the procedure will be the same, except that two split-spoon samples will be mixed together. The Field Logbook should clearly state that the samples have been composited, which samples were composited, and why the compositing was done.

Samples taken for geotechnical analysis will be undisturbed samples, collected using a thin-walled (Shelby tube) sampler.

ED_004144A_00000101-00581

3.2 SURFICIAL SOIL SAMPLES

Don personal protective equipment. Remove vegetative mat. Collect a sample from under the vegetative mat with a stainless steel trowel, push tube sampler, or bucket auger. If a representative sample is desired over the depth of a shallow hole or if several shallow samples are to be taken to represent an area, composite as follows:

- As each sample is collected, place a standard volume in a stainless steel bowl.
- After all samples from each hole or area are in the bucket, homogenize the sample thoroughly with a decontaminated stainless steel spoon or spatula.

If no compositing is to occur, place sample directly into the sample jars. Place the leftover soil in the auger borings and holes left by sampling. If necessary, add clean sand to bring the subsampling areas back to original grade. Replace the vegetative mat over the disturbed areas. Samples for volatile organic compounds will not be composited. A separate sample will be taken from a central location of the area being composited and transferred directly from the sampler to the sample container. Preserve samples as required. Decon sampling implements.

4. MAINTENANCE

Not applicable.

5. PRECAUTIONS

Refer to the Health and Safety Plan.

Soil samples will not include vegetative matter, rocks, or pebbles, unless the latter are part of the overall soil matrix.

6. REFERENCES

ASTM International. Method D1586-84, Penetration Test and Split-Barrel Sampling of Soils.

———. Method D1587-83, Thin Walled Sampling of Soils.

Department of the Army, Office of the Chief of Engineers. 1972. Engineer Manual 1110-2-1907 Soil Sampling. 31 March.

ED_004144A_00000101-00582

Standard Operating Procedure No. 026
for
Active Soil Gas Analysis

Prepared by

EA Engineering, Science, and Technology, Inc., PBC
225 Schilling Circle, Suite 400
Hunt Valley, Maryland 21031

Revision 0
December 2014

This page intentionally left blank

CONTENTS

Page

1. SCOPE AND APPLICATION 1
2. MATERIALS 1
3. SETUP 1
4. CALIBRATION 2
5. OPERATION 3
6. QUALITY CONTROL 3
7. RECALL AND DISPLAY OF RESULTS 3
8. SHUTDOWN 3
9. PRECAUTIONS 4

ED_004144A_00000101-00585

This page intentionally left blank

ED_004144A_00000101-00586

1. SCOPE AND APPLICATION

The purpose of this Standard Operating Procedures is to describe protocols for using the Sentex Scentograph Portable Gas Chromatograph (GC) to analyze soil gas samples for volatile organic compounds. The primary method described here for introducing samples into the GC uses an absorbent tube to concentrate samples prior to analysis, although sample loop and direct injection methods may also be used. Operation of the GC should not be attempted without first reading the operation manual.

Use of brand names in this Standard Operating Procedure is not intended as endorsement or mandate that a given brand be used. Alternate equivalent brands of detectors, sensors, meters, etc. are acceptable. If alternate equipment is to be used, the contractor will provide applicable and comparable standard operating procedures for the maintenance and calibration of same.

2. MATERIALS

The following materials may be required:

Argon (high purity) carrier gas	Sample loop assembly and loops
Battery charger for Scentograph GC	Sentex Scentograph Portable GC with argon ionization detector/electron capture detector
Battery charger for Toshiba PC	Spare analytical column
Calibration gases, as needed	Spare preconcentrator assembly
Copper gas transfer tubing and fittings	Spare Septa
Industrial Solvents Calibration Library software and empty data disks	Syringe cleaner
Multimeter	Syringes (1 µL, 5 µL, 10 µL, 100 µL, 1 mL, 5 mL, and 50 mL)
Other spare parts (e.g., tubing, swagelock fittings)	Three 1L Tedlar bags
Paperwork (applicable regulations and NRC license, Scentograph Operators' Manual, GC log book, table of ionization potentials)	Tools (Allen wrench, large adjustable wrench, small adjustable wrench, 0.25-in. wrench, small screwdrivers)
Regulator for calibration gas	Toshiba T 1200 laptop personal computer
Regulator for carrier gas	Vacuum pump for syringe cleaner

3. SETUP

The GC should preferably be operated in a clean environment, without significant concentrations of volatile organic compounds in the atmosphere. Batteries and internal gas canisters allow self-contained operation of up to 6-8 hours, but longer continuous operation requires a 110-V power supply and external source of ultra-high-purity argon carrier gas. After each portable operation, the instrument must be recharged for at least 8 hours, preferably overnight, before resuming operations. When the instrument is not in use, it should be connected to the battery charger.

ED_004144A_00000101-00587

Install regulator on the carrier gas cylinder, attach copper tubing to the outlet of the regulator, and briefly purge the tubing by carefully opening the cylinder valve slightly. Connect the free end of the copper tubing with quick connector to the fitting marked carrier on the back of the GC, being careful to insert the connector straight. Open cylinder valve and carrier gas valve on GC to fill the internal tank. The maximum pressure is 1,800 psi, and severe damage can result from over pressuring the internal tanks. Repeat this process for calibration gas, connecting tubing to fitting marked calibration. Do not operate the GC if the carrier gas pressure is less than 200 psi.

Set column pressure to desired value (typically 30 psi) by adjusting carrier gas regulator inside the GC with an Allen wrench. Do not use a column pressure of less than 10 psi. After at least 5 minutes, turn on the PC (with Sentex software disk in A drive and blank data disk in the B drive) and set initial conditions at the operating parameters menu. For the industrial solvents calibration library, the operating conditions should be as follows:

Sample time:	Adjust as needed, generally 10-20 seconds
Delay time:	0.5 seconds
Desorption time:	4.0 seconds
Inhibit time:	80 seconds
Oven temperature:	100°C
Chart duration:	20 minutes
Analyses/calibration:	Adjust as needed (used in automatic mode only)
Column:	12 ft 10 percent SP1000
Column pressure:	30 psi
Retention time window:	Typically 3 percent
Noise threshold:	Typically 50-100

Other operating conditions should be selected as needed depending on project needs if the Industrial Solvents Calibration Library is not being used.

4. CALIBRATION

Using the Industrial Calibration Library software, it is only necessary to calibrate with benzene. Otherwise, calibration gases containing the compounds of interest are needed. A calibration standard near the expected sample concentration should be used.

At the operating parameters menu, name the calibration mixture, identify the peaks, and specify their concentrations. Recheck operating parameters.

Calibration gas from the internal cylinder or from an external source may be used. If using the internal tank, turn on the calibration gas valve on the rear of the GC. If an external source is used, turn off the carrier gas valve, run calibrations until the calibration gas pressure is zero, and attach the carrier gas source (at atmospheric pressure) to the calibration port on the side of the GC.

ED_004144A_00000101-00588

Initiate the calibration run by pressing 4 [enter] at the main menu. If using the industrial solvents calibration library, the benzene peak must be the first peak and must fall between 230 and 242 seconds. If not, make small adjustments to the temperature or column pressure and repeat.

5. OPERATION

After satisfactory calibration of the instrument, attach a Tedlar bag or similar sample container to the analysis port on the instrument and open the inlet valve on the container. Type 3 followed by a return at the main menu to initiate a sample run. If manual operation is selected after a change in operating parameters before a calibration run, the instrument will automatically start a calibration cycle before the analysis run.

The instrument will match observed peaks with those in the calibration gas and in the calibration library (if used), identify the peaks, and calculate concentrations based on peak area. Peak data as well as operating conditions are stored on a data disk in the B drive.

6. QUALITY CONTROL

At a minimum, a quality control sample containing constituents of interest should be analyzed at the beginning and end of each batch of samples. The instrument should be calibrated before each sample batch, after any change in operation conditions, and when any changes in instrument response is noted. Duplicate samples should be analyzed every 10-20 samples.

7. RECALL AND DISPLAY OF RESULTS

To recall results, type 5 followed by a return at the operations menu. The analysis summary, listing trace number, analysis date, analysis time, peak identification, concentration, retention time, peak area, and sample (or calibrant) name, will be displayed. To view a particular trace, type 6 followed by a return at the operation menu, then specify the trace number.

8. SHUTDOWN

After the last analysis, turn off the PC. Allow the column and detector to cool before shutting off the carrier gas supply. Turn off carrier and calibration gas valves on the back of the GC and turn off cylinder valves. Bleed excess pressure from the copper tubing and disconnect from the GC.

ED_004144A_00000101-00589

9. PRECAUTIONS

The argon ionization detector uses a 150-mCi tritium source on a thin metal foil. The source is sealed in a steel cylinder. Any repairs of the detector must be made by the manufacturer. The detector housing and the sealed source must never be opened.

To prevent damage to the instrument, the following precautions must be observed:

- Do not operate the GC with less than 200 psi carrier gas pressure.
- Do not fill the internal tanks to over 1,800 psi.
- Allow at least 5 minutes of carrier gas flow through the column before turning off the instrument.
- Do not replace the preconcentrator assembly without instructions from the manufacturer.
- Do not select a column pressure less than 10 psi or greater than 30 psi.
- Use only carrier grade argon as a carrier gas (at least 99.995 percent, preferably 99.999 percent pure). Industrial grade argon (e.g., from a welding shop) will cause contamination.
- Use only high purity regulators for the gas supply.
- If problems occur, call Sentex Technical Support.

ED_004144A_00000101-00590

Standard Operating Procedure No. 027A
for
Passive Soil Gas Surveys
– Gore Sorbers

Prepared by

EA Engineering, Science, and Technology, Inc., PBC
225 Schilling Circle, Suite 400
Hunt Valley, Maryland 21031

Revision 0
December 2014

This page intentionally left blank

CONTENTS

Page

1. SCOPE AND APPLICATION 1

2. COLLECTOR DESCRIPTION 1

3. FIELD OPERATIONS 1

   3.1 Materials 1
   3.2 Locating Sample Sites 2
   3.3 Exposure Time 2
   3.4 Field Quality Control Blanks 3

      3.4.1 Temperature Control Blank 3
      3.4.2 Trip Blanks 3
      3.4.3 Field Duplicates 3

   3.5 Sorber Retrieval 3
   3.6 Sorber Shipment 4

4. ANALYTICAL AND DATA PRESENTATION 4

   4.1 Sample Receiving 4
   4.2 Volatile Organic Compound Analysis 4
   4.3 Sample Holding 4
   4.4 Instrumentation 5
   4.5 Analytical Parameters 5
   4.6 Laboratory Quality Assurance Procedures 5
   4.7 Mapping/Reporting 5

5. REFERENCES 5

ED_004144A_00000101-00593

This page intentionally left blank

ED_004144A_00000101-00594

1. SCOPE AND APPLICATION

The steps and information herein are the Standard Operating Procedures (SOPs) for conducting a GORE-SORBER Screening Survey. GORE-SORBER® Screening Modules and organic analyses will be supplied/conducted by:

W.L. Gore & Associates, Inc.
101 Lewisville Road
P.O. Box 1100
Elkton, Maryland 21922-1100
(410) 392-3300

Use of brand names in this SOP is not intended as endorsement or mandate that a given brand be used. Alternate equivalent brands of detectors, sensors, meters, etc. are acceptable. If alternate equipment is to be used, the contractor will provide applicable and comparable SOPs for the maintenance and calibration of same.

2. COLLECTOR DESCRIPTION

The sorbent containers and insertion/retrieval cords are constructed solely of inert, hydrophobic, microporous GORE-TEX® expanded polytetrafluoroethylene (ePFTE, similar to Teflon) with no fillers or plasticizer introduced during manufacturing. The unique feature of this construction is that the entire sorbent container surface area, as well as the surrounding insertion/retrieval "cord," facilitates vapor transfer. Sorbent containers (sorbers) are typically filled with TENAX®.

3. FIELD OPERATIONS

3.1 MATERIALS

The following materials may be required for field operations:

Cooler(s) with chilled ice packs or ice	Knife, scissors, and needle nose pliers
Corks with screw eyes	Latex surgical gloves or equivalent
Correctly scaled site map	Measuring tape, transit, or other distance measuring device
Electric power source (AC power outlet or generator)	Paper towels and American Society for Testing and Materials Type II water or equivalent
Electric rotary, hammer-action, or combination hammer with 1-in. carbide-tipped bit (31-36 in. long)	Patching compound for concrete and/or asphalt holes (if required)
Extension cord	Pen, clipboard, field notebook, chain-of-custody (COC) form, and SOP
Fiberglass staff flags or some other means of location marking	Slide hammer/tile probe
GORE-SORBER® Screening Modules and Vials	Small shovel
Insertion rod	Trash bags

ED_004144A_00000101-00595

3.2 LOCATING SAMPLE SITES

Lay out sampling grid using point spacing specified in Work Plan. From a known survey point, locate and mark all screening module location sites to the nearest inch using fiberglass staff flags.

Note on field maps and/or field log any deviations to the sample grid as presented in the Work Plan.

Drill Hole—A 9/16- to 1-in. hole is cored to a depth of 2-3 ft below ground surface (installation depth is held constant for a given survey). This depth has been selected to keep the modules below the daily effects of atmospheric temperature changes. Coring is accomplished using a variety of tools depending on the nature of the material being cored. The holes should be vertical and as free from debris as possible.

Prepare Sorber Unit and Note the Unique Serial Number—Immediately after the hole is cored, a GORE-SORBER® Screening Module is removed from its sealed container. Note that each module has a unique serial number recorded on top of the module vial and a metal tag attached to the module. Each vial is also individually numbered. **Record this number on the site map and/or field notebook immediately**.

Insert Sorber Unit—Insert the stainless steel insertion rod into the pocket in the bottom of the module, and lower it into the hole. Ensure that the module goes the entire way down the hole. If a large resistance is felt during insertion, remove the module and re-drill the hole. Re-insert the module. When the module is completely inserted in the hole, press the insertion rod against the side of the hole. Twist the rod and pull the rod out.

Seal Hole—Attach the end of the module to the screw eye in the cord. **Do not remove the metal ID tag**. Coil the excess retrieval cord and push it with the metal tag into the hole. Cork the hole to prevent the intrusion of rain and atmospheric gasses during exposure. If the cork does not fit snugly into the hole, and wrap a short length of the module retrieval cord around the cork and re-insert the cork into the hole.

Decontaminate the auger and insertion rod. After each use, decontaminate all intrusive equipment using decontamination procedures specified in Section 3.3.2 of SOP No. 005.

3.3 EXPOSURE TIME

Exposure times, typically 14 days, are defined in the site Work Plan. Exposure times should be sufficient to allow equilibration of the modules with subsurface conditions. Actual subsurface exposure time and conditions will be measured and recorded.

ED_004144A_00000101-00596

3.4 FIELD QUALITY CONTROL BLANKS

3.4.1 Temperature Control Blank

Water temperature control blanks are normally supplied by Gore with one blank supplied with each cooler of shipped modules. Temperature control blanks consist of a small vial of American Society for Testing and Materials Type I water that is used to determine the temperature of the modules upon arrival at the laboratory. One temperature control blank must be included with each cooler shipped to Gore for analysis.

3.4.2 Trip Blanks

The trip blank is a set of sorbent modules used to detect volatile organic compound (VOC) contamination during sample shipping and handling. Trip blanks travel to the site with the sampling modules and are returned to the laboratory with the sampling modules. The trip blank will not be exposed to field conditions. The trip blank will be used to assess whether or not any chemical detected by the sorbers are the result of sources other than the study sites. One trip blank is to accompany each cooler containing VOCs. Trip blanks will be kept in sample refrigerators during the course of field work.

3.4.3 Field Duplicates

The collection of field duplicate samples provides for evaluation of overall sampling and laboratory precision by comparing analytical results of two samples of the same matrix from the same location. Two sorber units will be installed into one hole for a duplicate sample. The additional modules will allow for duplicate analysis of several modules from the same hole. If there is a wide difference in analytical results between duplicate samples, it can indicate poor precision of analytical technique and suggest increased evaluation of the data may be warranted. Field duplicates will be collected at a frequency of 10 percent of the samples collected per event.

3.5 SORBER RETRIEVAL

Evaluate the Sample Site—Note any site disturbance that may have occurred since the sorber module was installed. Note any stains on the ground, cork removal, or other such features that might indicate tampering. Remove cork.

Remove Sorber Unit from Hole—Wearing surgical gloves, and wrap retrieval cord once or twice around your hand. Using slow, steady tension, pull the cord straight out of the ground. **Double check the Module ID number on the sample module, sample vial, and COC/Field Logbook to ensure that the correct module is retrieved from the correct grid position**. Cut off the cork and discard.

Place Sorber Unit in Vial—Put the entire retrieval cord, including the metal tag, back into the correctly labeled vial. Tightly reseal the vial. Immediately place the vial in a cooler with blue ice. Sorbers will be stored onsite in a freezer until shipped to the laboratory.

ED_004144A_00000101-00597

3.6 SORBER SHIPMENT

Sample packing procedures will follow the steps outlined in SOP No. 004. The sorbers should be packed in the blue ice certified by W.L. Gore to be volatile free. Do not use Styrofoam "peanuts" or any other packing material which may contain volatiles or out-gas and contaminate sorbers during shipment. Bubble packing is acceptable. Receive clearance from SciTech to ship samples.

Carefully cut three modules from each sorber unit, one sorber at a time. Care must be taken at this point to ensure that the serial number for each sorber unit is transposed to the sample vial and COC. Do not start a new sorber unit until the transfer of modules from the previous sorber unit is completed in full. Place these three modules in a clean bottle supplied by the contract laboratory.

Note the serial number of the sorber unit tag on the bottle label. Place this number on the contract laboratory COC. Seal the bottle. Place bottle in cooler and pack the samples following the steps in SOP No. 004.

Using the vial racks, coolers, and ice substitutes supplied by the contract laboratory, return the exposed vials and COC document to the contract laboratory via overnight carrier service. Return the remaining sorber module to the GORE vial and seal. Place vials in cooler and pack the samples following steps in SOP No. 004.

Using the vial racks, coolers, and ice substitutes supplied by Gore, return the exposed vials and COC document to Gore's analytical laboratory via overnight carrier service.

4. ANALYTICAL AND DATA PRESENTATION

4.1 SAMPLE RECEIVING

Upon receipt at the W.L. Gore and contract laboratories, all soil gas samplers are inspected and sample labels are cross-referenced against the COC form. Any anomalies observed during the inspection are noted on the COC. When all anomalies, if any, are resolved, the samplers are ready for analysis.

4.2 VOLATILE ORGANIC COMPOUND ANALYSIS

W.L. Gore will analyze for VOCs and report the results of this work directly to the organization conducting the soil gas survey.

4.3 SAMPLE HOLDING

There are no holding time limitations.

ED_004144A_00000101-00598

4.4 INSTRUMENTATION

Instrumentation at W.L. Gore consists of a Hewlett-Packard 5890-II gas chromatograph, 5971A mass selective detector, and 7673 liquid autosampler. A 25-m, 0.2-mm bore, 0.5 µm "HP-5" 95 percent dimethyl, 5 percent diphenyl polysiloxane capillary column is normally used. A typical temperature program developed for analyzing the sorbers is: initial temperature 40°C for 4 minutes, ramp 20 C/minute to 320°C, final temperature 2 minutes. Injection port temperature (for method extraction) is 250°C, detector transfer line is 380°C. A Perkin-Elmer ATD-400 Automated Thermal Desorption unit is the extraction device used by Gore for sites with low concentrations of gasoline and solvent contamination. By cryofocusing the sample extract prior to sample injection into the gas chromatograph column, Gore has achieved greatly increased sensitivity to all compounds, and superior separation of VOCs compared to solvent or headspace extraction methods.

4.5 ANALYTICAL PARAMETERS

Table SOP027A-1 includes proposed analytical parameters. The soil gas contractor will also conduct a library search to identify and report up to 100 organic chemical constituents present in each module if requested.

4.6 LABORATORY QUALITY ASSURANCE PROCEDURES

W.L. Gore will conform to its Quality Assurance Plan (1994) to be appended to the project-specific Quality Assurance Project Plan with regard to quality control sample type, frequency, handling, preparation, and analytical procedure.

4.7 MAPPING/REPORTING

Graphic presentation of the data extracted from the GORE-SORBER® Screening Modules is presented by overlaying the contamination patterns detected during the analysis onto computer-aided design maps supplied by the field investigator.

5. REFERENCES

W.L. Gore. 1994. Quality Assurance Plan.

ED_004144A_00000101-00599

This page intentionally left blank

ED_004144A_00000101-00600

TABLE SOP027A-1 PROPOSED ANALYTICAL PARAMETERS PASSIVE SOIL GAS SURVEY

Analytes	Limit (µg/sorber)
Acetone	(a)
Benzene	0.04
2-Butanone	(a)
Carbon Tetrachloride	0.06
Chlorobenzene	0.03
Chloroform	0.03
Chloromethane	(a)
1,4-Dichlorobenzene	0.04
1,1-Dichloroethane	(a)
1,2-Dichloroethane	(a)
1,1-Dichloroethylene	(a)
trans-1,3-Dichloroethylene	(a)
1,2-Dichloropropane	(a)
cis-1,3-Dichloropropene	(a)
trans-1,3-Dichloropropene	(a)
Ethylbenzene	0.03
Methyl tert-Butyl Ether	0.07
Methylene Chloride	0.23
2-Methylnapthalene	0.03
2-Methylphenol	0.04
Naphthalene	0.03
Octane	0.02
Pentadecane	0.06
Phenanthrene	0.015
Phenol	0.05
Styrene	(a)
1,1,2,2-Tetrachloroethane	(a)
Tetrachloroethylene	0.07
1,2,4,5-Tetramethylbenzene	0.02
Toluene	0.03
1,1,1-Trichloroethane	0.06
1,1,2-Trichloroethane	(a)
Trichloroethylene	0.04
Tridecane	0.04
1,2,4-Trimethylbenzene	0.03
1,3,5-Trimethylbenzene	0.03
Undecane	0.04
Vinyl Chloride	(a)
m-Xylene	0.02
o-Xylene	0.03
Total Xylenes	(a)
(a) Method detection limit studies currently being conducted.	

This page intentionally left blank

Standard Operating Procedure No. 027B
for
Passive Soil Gas Surveys
– Petrex Technique

Prepared by

EA Engineering, Science, and Technology, Inc., PBC
225 Schilling Circle, Suite 400
Hunt Valley, Maryland 21031

Revision 0
December 2014

This page intentionally left blank

CONTENTS

Page

1. SCOPE AND APPLICATION 1

2. SAMPLE PRODUCTION AND PREPARATION 1

   2.1 Charcoal Sieving 1
   2.2 Charcoal Bonding 2
   2.3 Collector Containers 2
   2.4 Wire Cleaning 2
   2.5 Packaging for Client 2
   2.6 Quality Control and Quality Assurance 2
   2.7 Custody Document 3

3. FIELD OPERATIONS 3

   3.1 Locating Sample Sites 3
   3.2 Soil Coring 3
   3.3 Collector Placement 3
   3.4 Site Identification 3
   3.5 Exposure Time 4
   3.6 Collector Retrieval 4
   3.7 Collector Numbering 4
   3.8 Collector Shipment 4
   3.9 Decontamination 4

4. COLLECTOR ANALYSIS 5

   4.1 Numbering Check 5
   4.2 Sample Holding 5
   4.3 Instrumentation 5
   4.4 Calibration 6
   4.5 Instrument Parameters 6
   4.6 Mass Spectrometer Analysis and Quality Assurance/Quality Control 6
   4.7 Data Filing 7
   4.8 Schedule of Maintenance 7

5. DATA INTERPRETATION AND PRESENTATION 7

   5.1 Map Generation 7
   5.2 Compound Identification 7
   5.3 Relative Flux Determination 8
   5.4 Data Interpretation 8

ED_004144A_00000101-00605

Page

5.5 Additional Uses of Petrex Collectors 8

5.5.1 Headspace 8
5.5.2 Depth Profiling 8

5.6 Data Presentation 9

6. INTERPRETATION OF PETREX MAPS 9

ED_004144A_00000101-00606

1. SCOPE AND APPLICATION

The steps and information herein are the Standard Operating Procedures (SOPs) for carrying out a Petrex environmental survey. Possible deviations from SOPs may occasionally be implemented onsite by EA field staff to adjust for unique survey conditions. The Petrex technique is also frequently used for oil and gas, geothermal, and mineral exploration which force slight variations on this SOP. Surveys performed in winter in frozen ground offer a unique situation and slightly different field practices.

The fact that the SOPs may occasionally be altered is done to maintain quality service while using the Petrex technique. It must also be understood that the ion flux data from one survey at a given site and a given time interval should not be compared to the flux numbers from another survey. Since the data are semi-quantitative, only the flux patterns of a survey or the relative difference between flux values of two samples from the same survey should be considered during interpretation.

If any questions arise upon review of this document, please address questions to Northeast Research Institute, Inc. (NERI) technical staff at:

Northeast Research Institute, Inc.
309 Farmington Avenue, Suite A-100
Farmington, Connecticut 06032
(203) 677-9666

– OR –

Northeast Research Institute, Inc.
605 Parfet Street, Suite 100
Lakewood, Colorado 80215
(303) 238-0090

Use of brand names in this SOP is not intended as endorsement or mandate that a given brand be used. Alternate equivalent brands of detectors, sensors, meters, etc. are acceptable. If alternate equipment is to be used, the contractor will provide applicable and comparable SOPs for the maintenance and calibration of same.

2. SAMPLE PRODUCTION AND PREPARATION

2.1 CHARCOAL SIEVING

The static volatile organic compound (VOC) collector is prepared by applying pre-sieved activated charcoal to the end of a ferromagnetic wire.

ED_004144A_00000101-00607

2.2 CHARCOAL BONDING

The details of the procedure for preparing the activated charcoal are proprietary information. The procedure results in the production of a collector consisting of size-sorted activated charcoal bonded to the area within 1 cm of the end of a ferromagnetic wire with a Curie point of 358°C.

2.3 COLLECTOR CONTAINERS

Culture tubes, measuring 25 mm × 125 mm and having a screw cap closure, are washed in a biodegradable detergent, rinsed in methanol, and baked at 180°C for 1 hour.

2.4 WIRE CLEANING

The previously constructed wires are cleaned by heating in a special apparatus at 358°C a total of 35 times under high vacuum. The wires are cleaned in lots of 32 wires. From each lot, two wires are removed for immediate analysis to verify the cleanliness of the lot. The remaining 30 wires are then sealed in one clean culture tube under an inert atmosphere and placed in inventory.

2.5 PACKAGING FOR CLIENT

Immediately prior to shipping the wires to the field, the tubes containing 30 wires are removed from inventory and the wires are repackaged under an inert atmosphere in individual tubes. All of the repackaged tubes contain two wires. Ten percent of these have three wires. The collectors are packaged by bagging in zipseal plastic bags in an inert atmosphere. These bags are then placed in inventory in a temperature-controlled room. The basis for having two wires in each tube is that it allows NERI to analyze one wire by standard Thermal Desorption-Mass Spectrometry while the second sample is available for Thermal Desorption-Gas Chromatography/Mass Spectrometry or as a backup to the Thermal Desorption-Mass Spectrometry. The third wire in selected samples from each survey is used to establish optimum instrument parameters.

2.6 QUALITY CONTROL AND QUALITY ASSURANCE

Prior to releasing stocked wires for a field survey, two single wires from each lot are checked for cleanliness and collecting potential. This quality assurance/quality control phase measures and documents collector preparedness when leaving the laboratory. One of these wires is analyzed without exposure in order to demonstrate that the lot is clean, and the other wire is exposed to hexane vapor for two seconds and then analyzed in order to verify that the charcoal is highly adsorptive. The triplicate wires are used when the wires return from the field. These wires help determine the required machine sensitivity and act as a measure of reproducibility.

ED_004144A_00000101-00608

2.7 CUSTODY DOCUMENT

A "custody document" accompanies each group of collectors leaving the laboratory and remains with the group until the collectors have been exposed, analyzed, and disposed of.

3. FIELD OPERATIONS

3.1 LOCATING SAMPLE SITES

Sample placement sites, usually predetermined on an accepted survey proposal, are located from a nearby, surveyable landmark using a compass and pacing or some other measuring device (e.g., pacing wheel, hip chain, or tape measure). A transit may be used for more accurate placement, but such accuracy is seldom required.

3.2 SOIL CORING

Once a sample site has been established, a hole is cored to a predetermined depth (sample placement depth is held constant for a given survey). This is accomplished using a variety of tools depending on the nature of the material to be cored. The holes should be vertical and as free from debris as possible. When the sampling is performed in areas covered by asphalt or concrete, a generator-powered rotary hammer drill with a carbide-tipped bit is used to drill a 1.5-in. diameter hole in the cover. A hand auger is used to remove the cuttings and road base from the hole.

3.3 COLLECTOR PLACEMENT

Immediately after the hole is cored, a collector tube is removed from the zipseal plastic bag and the bag is resealed. The cap is then removed from the tube, and the tube is placed vertically, open end down, into the hole. The hole is then backfilled with the soil core which was removed. The cap is placed in a clean zipseal plastic bag and stored until collector retrieval. Collectors placed under asphalt or concrete are treated the same as those in uncovered soil, except for modifications to permit easy retrieval and to avoid potential down-hole contamination from surface cuttings. To allow retrieval of these collectors, a piece of galvanized wire is twisted around the neck of the tube and run to the surface so that the sample may be recovered by pulling the retrieval wire. An aluminum plug is then placed near the top of the hole, and the remainder of the hole is plugged with quick setting hydraulic cement.

3.4 SITE IDENTIFICATION

Each site is flagged using pin flags, spray paint, or ribbon flagging, and the site location is marked and numbered on a base map. A field logbook is used to record the date, collector number, site location description, soil type, and general observations.

ED_004144A_00000101-00609

3.5 EXPOSURE TIME

Time calibration collectors are included as part of every survey. These are quality assurance collectors used to monitor sample loading during the survey. These collectors are placed in an area of known or suspected contamination, and sets are retrieved and analyzed at intervals to indicate the appropriate residence time for survey samples. Separate "travel blank" collectors are also included as a quality control measure in every survey. These collectors are transported along with the survey collectors but the tubes are never opened. These control collectors monitor for potential contamination during transport or placement.

3.6 COLLECTOR RETRIEVAL

The collectors are retrieved when the time calibration collectors reveal that there has been sufficient loading of gases on the charcoal absorbent. In the field, the soil is removed until the tube is exposed. A cap is taken from the sealed zipseal plastic bag. The Viton seal is checked to make sure it is seated inside the cap. The culture tube is removed from the hole and any dirt that is on the threads of the tube is wiped off with a clean cloth. In the event the tube is broken or cracked, the collector wire is transferred to a new tube using forceps. The tube is capped and sealed. All flagging material is retrieved.

3.7 COLLECTOR NUMBERING

Each tube is immediately numbered according to the scheme established in the field notes and on the base map. The collector number is written on adhesive labels which are applied to the tube cap. No two sites may have the same number.

3.8 COLLECTOR SHIPMENT

Once the collectors have been retrieved, they are sealed in zipseal plastic bags and then wrapped with bubble packing. Materials such as styrofoam peanuts or newsprint can introduce possible contaminants to the collectors and should not be used for packaging. The collectors, field notes, base map, and chain-of-custody document are either hand carried back to NERI's analytical laboratories or shipped by overnight carrier service.

3.9 DECONTAMINATION

All down-hole equipment and tool parts which contact excavated soil are constructed of heavy gauge steel and have no natural or synthetic components that could absorb and retain most soil-borne organic contaminants. These tools are decontaminated between use at each sampling location by rotation through a four-step cleaning process:

1. Immersion and vigorous scrubbing in a mild solution of laboratory grade detergent until all visual accumulations of soil are removed

ED_004144A_00000101-00610

2. Thorough rinsing with potable water

3. Spray rinsing with methyl alcohol

4. Air dry.

All derived liquids (and sediment) are contained in dedicated disposable vessels.

4. COLLECTOR ANALYSIS

4.1 NUMBERING CHECK

Upon receipt of the collectors, the number on each tube is recorded and any missing or duplicated numbers are noted. A missing number generally indicates that the collector could not be retrieved. Samples with identical numbers generally cannot be used unless their true site location can be established.

4.2 SAMPLE HOLDING

A Petrex soil gas sample consists of a minute quantity of various volatile organic compounds sorbed onto a charcoal element and enclosed in a protective container with a near impervious Viton seal.

Maximum sample holding time is a function of both the chemical stability of the sorbed compounds and the integrity of the seal of the container.

It has been the experience of NERI that Petrex soil gas samples that are properly repackaged after retrieval from the field and stored under environmentally controlled conditions typically remain compositionally and quantitatively unchanged through periods of greater than 4 months.

All samples scheduled for analysis via Curie-point pyrolysis/mass spectrometry are analyzed within 3 weeks of retrieval from the field.

4.3 INSTRUMENTATION

Thermal desorption is accomplished using a Fisher radio frequency power supply and a Curie point pyrolizer designed by NERI and Extrel. The mass spectrometer used is an Extrel Spectrel quadrapole mass spectrometer. The analysis is controlled and recorded by a DEC PDP 11/23 microcomputer. Following the analysis, all data are collected and archived on a PDP 11/73 microcomputer. Data for all active jobs are stored on both of the PDP 11 computers, as well as on magnetic tape. Data for all completed jobs are stored on magnetic tape in perpetuity.

ED_004144A_00000101-00611

4.4 CALIBRATION

An Extranuclear Quadrupole Spectrometer equipped with a Curie-point pyrolysis/thermal desorption inlet is used for collector analysis. Mass assignment and resolution are manually adjusted using a perfluorotributylamine (PFTBA) standard. A linear correction, based on the known spectrum of PFTBA, is calculated. This correction is applied to a second PFTBA spectrum. If correct mass (M/Z) values are obtained, the operator proceeds to the next turning step. If not, Step 1 is repeated until correct masses are obtained.

Peak intensity ratios are set from the major peaks in the PFTBA spectrum using the following values:

Mass (M/Z)	Spectrum Intensities
69	100%
131	25%±5%
219	35%±5%
502	5%±2%

At the standard mass (M/Z = 69), PFTBA is measured at a preset sample pressure and detector voltage and compared to previous values at the same setting.

Electron energy is set to 70 electron volts and emission is set at 12 milliseconds. All other operating parameters, such as scans, scan range, and mass offset, are established in the computer program. These values may only be changed by the laboratory manager.

Tuning is performed at the beginning of a run so that an individual survey is analyzed at the same set of instrument conditions. The samples are analyzed in random order.

4.5 INSTRUMENT PARAMETERS

The instrument is operated with the following parameters:

Vacuum	<3 × 10-6 torr
Ionization Energy	70.0 eV
Ionization Current	12.0 mA
Desorption Time	5.0 sec
Desorption Temperature	358°C
Number of Scans/Sample	30
Scan Rate	1,250 amu/sec

4.6 MASS SPECTROMETER ANALYSIS AND QUALITY ASSURANCE/QUALITY CONTROL

Each collector wire is analyzed in random order. The entire group of survey collectors is analyzed as one run without interruption from other surveys.

The organic gases adsorbed on the carbon are thermally desorbed from the carbon, separated according to ion mass, counted, and a mass spectrum of masses from 29 to 240 is obtained.

ED_004144A_00000101-00612

Periodic (approximately every 20 samples) machine background analyses are performed as a quality control measure to assure minimal influence from internal communication. If there are peaks that are not related to atmospheric gases, the supervisor is notified and the mass spectrometer is shut down and cleaned as necessary.

A written sample number record is kept during the analysis to prevent accidental cross numbering.

The mass spectrometer control program prompts the operator with a warning if a sample number is entered that has already been used. The operator then checks the current number, along with the disk storage location of the previously entered number, to resolve the true numbering situation.

4.7 DATA FILING

The raw data file generated by the sample analysis is labeled and stored under a unique file name.

4.8 SCHEDULE OF MAINTENANCE

1,000 Samples: Cleaning of sample introduction area, ion source, and expansion chamber by in-house technicians.

4,000 Samples: Above noted procedures plus cleaning of lenses and quadrapoles

Annually: Preventative maintenance program conducted by manufacturer's service representative.

5. DATA INTERPRETATION AND PRESENTATION

5.1 MAP GENERATION

The sample location maps are created by placing the field base map on a digitizing board and entering each site as an X-Y coordinate relative to an origin. The relative ion counts for each compound can then be plotted at the sample locations. Cultural and topographic features can also be digitized onto the map as reference points.

5.2 COMPOUND IDENTIFICATION

The mass spectrum that is drawn for each sample is compared to a library of mass spectra derived from known volatile organic compounds. Several thousand pure compound spectra have been developed by the Bureau of Standards and are available for spectra comparison. NERI has also developed its own library of spectra through headspace analysis of pure compounds using the Petrex wires. Once a compound has been identified in this manner, the ion current or "flux"

ED_004144A_00000101-00613

for this compound is defined as the total ion current for the "parent peak" or least interfered peak of that compound.

5.3 RELATIVE FLUX DETERMINATION

The process of determining ion currents (relative intensities) of indicator peaks is computerized. All ion current data are extracted from the original data file and processed for identification.

The relative ion current intensity (relative intensities) of the gases that are desorbed from the collectors is matched with sample locations on a map of the survey area. These relative intensities are useful for inferring the areal extent of contamination and relative differences in the concentrations of compounds in the soil or groundwater. This can aid in determining the location of source areas or direction of movement of contamination.

These surface collections and analyses **cannot** be used to determine the depth to the source contaminants or the precise concentration at depth.

Because compounds can be differentiated by their spectra, analyses from the carbon collectors can be used to help differentiate multiple compounds and multiple source areas within a single survey.

5.4 DATA INTERPRETATION

Once the relative intensities for a compound are mapped, the data can be contoured to reveal those areas with "hot spots" and the orientation of plume migration. All other available data, such as geologic setting, soil types, groundwater conditions, type of contaminant, site history, and other factors, are taken into account as the interpreter draws his/her conclusions.

5.5 ADDITIONAL USES OF PETREX COLLECTORS

Some of the other uses of the Petrex Technique that are utilized in surveys are headspacing of soil and water samples and depth profiling.

5.5.1 Headspace

A headspace soil sample is analyzed by collecting approximately 25 g of soil, which are transferred to a thermochemically cleaned headspace container. Several adsorption wires are added and the headspace container is sealed and allowed to equilibrate for up to 24 hours, depending on the level of contamination. The wires are then removed and prepared for desorption mass spectrometric analysis as described earlier. An identical process is performed for screening water samples.

5.5.2 Depth Profiling

In order to determine if the source of the soil gas signal is near surface or in a deeper vadose/saturated zone, depth profiling can be used.

ED_004144A_00000101-00614

At each selected location, shallow boreholes are drilled a few feet apart to depths such as 1, 2, 4, and 6 ft deep. After the loose cuttings and carvings have been removed from the bottom of the hole, a core of soil may be taken for headspace analysis. Next, a Petrex collector is lowered into the hole and backfilled. The collectors remain in place for the same length of time as the survey wires.

Each of the sampling methods addresses a different aspect that will help indicate the nature of the VOC source. In the case of composite soil sampling, detection of VOCs during analysis implies that the VOCs are actually contained within the soil matrix. When the VOC is anthropogenic in nature, the VOC presence is indicative of soil contamination of that depth interval.

When performing an *in situ* time-integrated sampling program with Petrex collectors, the collector serves as both an extended headspace sampler relative to the soil matrix in its immediate vicinity, as well as measuring the soil gas flux through that zone during the exposure period.

Soil gas movement through the vadose zone is theorized to be a diffusion process. If the headspace data indicate that the VOC is not present in the soil matrix, then the *in situ* depth profiling collectors should show a relative increase of ion counts as the depth increases. By combining both pieces of data, the nature of the VOC source (near surface or deep vadose/saturated) can be inferred.

5.6 DATA PRESENTATION

Once the data have been compiled, interpreted, and mapped, a report is produced for the client's use. The maps are printed which display the relative intensity of the compounds of the client's specifications. These reports and maps are for the client's use only, and no report or map is released to anyone else without prior written consent of the client. This confidentiality policy is never breached.

6. INTERPRETATION OF PETREX MAPS

The policies outlined in this SOP are strictly followed on each survey. It should be noted that the relative intensities for any compound at one sample location can only be compared to another location within the same survey for the same compound. Relative intensities of different compounds cannot be compared to each other. The relative intensities of one survey cannot be compared to the relative intensities of any other survey, even between two surveys at different times of the year over the same site. However, the same "hot spots" and plumes should contour in the same place over multiple surveys at a given site, allowing for migration.

ED_004144A_00000101-00615

This page intentionally left blank

ED_004144A_00000101-00616

Standard Operating Procedure No. 028
for
Well and Boring Abandonment

Prepared by

EA Engineering, Science, and Technology, Inc., PBC
225 Schilling Circle, Suite 400
Hunt Valley, Maryland 21031

Revision 0
December 2014

This page intentionally left blank

CONTENTS

Page

1. SCOPE AND APPLICATION 1

2. MATERIALS 1

3. PROCEDURE 1

   3.1 Grout 2
   3.2 Borings 2

      3.2.1 Shallow Borings not Penetrating Water Table 2
      3.2.2 Borings Penetrating the Water Table 3
      3.2.3 Deep Stratigraphic Borings 3

   3.3 Wells 3

4. REPLACEMENT WELLS 4

5. PRECAUTIONS 4

ED_004144A_00000101-00619

This page intentionally left blank

ED_004144A_00000101-00620

1. SCOPE AND APPLICATION

The purpose of this Standard Operating Procedure is to establish the protocols by which all wells and borings will be safely abandoned. The primary objective of well abandonment is to ensure that the abandoned well or boring does not provide a conduit for the vertical migration of contamination between aquifers.

2. MATERIALS

The following materials may be required:

Drill rig	Bentonite pellets (seal)
Filter pack material	Cement (Portland Type II)
Pure sodium bentonite with no additives (bentonite) powder (grout)	Approved water

3. PROCEDURE

The procedures used in boring abandonment will ideally accomplish two objectives: (1) protect aquifers from cross-contamination by sealing the borehole, and (2) restore the strata in the borehole to nearly original conditions by selective placement of fill material.

Any casing will be pulled, drilled out, or thoroughly pierced. Using tremie pipe, grout will be placed from the bottom of the hole to within 3 ft of the ground surface, and allowed to settle for 24 hours. The remainder of the hole will be filled with concrete. The surface of the concrete will be mounded, smoothed, and inscribed with "ABD," for abandoned, any assigned well or boring designation, and the date the hole was abandoned. All boring logs, samples, completion records, and abandonment procedures will be included in the records of work on the site or cluster.

If the hole is within 10 ft of a monitoring well in the same aquifer, or a replacement well is to be installed within 10 ft of the well, any temporary casing will be pulled, drilled out, or thoroughly pierced. Using tremie pipe, the hole will then be backfilled with filter pack material opposite sand strata and bentonite or grout opposite substantial (2 ft or thicker) clay and silt strata. Where sand as backfill approaches the ground surface, 2 ft of bentonite will be placed above the sand and a 3-ft concrete plug will be placed at the surface. Otherwise, backfill materials will be placed from the bottom of the hole to within 3 ft of the ground surface. These materials will be allowed to settle for 24 hours. The remainder of the hole will be filled with concrete. The surface of the concrete will be mounded, smoothed, and inscribed with "ABD," for abandoned, any assigned well or boring designation, and the date the hole was abandoned. All boring logs, samples, completion records, and abandonment procedures will be included in the records of work on the site cluster.

ED_004144A_00000101-00621

If the well is not within 10 ft of another monitoring well, or if there are no substantial, continuous sand bodies, and no replacement well is planned within 10 ft of the original well location, then the hole may be grouted from the bottom to the top.

3.1 GROUT

Grout used in construction will be composed by weight of:

- 20 parts cement (Portland cement, Type II or V)
- 0.4-1 part (maximum) (2-5 percent) bentonite
- 8 gal (maximum) approved water per 94-lb bag of cement.

Neither additives nor borehole cuttings will be mixed with the grout. Bentonite will be added after the required amount of cement is mixed with the water.

All grout material will be combined in an aboveground container and mechanically blended to produce a thick, lump-free mixture. The mixed grout will be recirculated through the grout pump prior to placement.

Grout placement will be performed using a commercially available grout pump and a rigid tremie pipe removal and grouting will be accomplished in stages, aquifer by aquifer, sealing the boring from the bottom to ground surface. This will be accomplished by placing a grout pipe to the bottom and pumping grout through the pipe until undiluted grout reaches the bottom of the next higher section of casing or, for the top-most section, until grout flows from the boring at ground surface. Efforts will be made to grout incrementally as the temporary casing is removed.

After 24 hours, the abandoned drilling site will be checked for grout settlement. On that day, any settlement depression will be filled with grout and rechecked 24 hours later. This process will be repeated until firm grout remains at the ground surface.

3.2 BORINGS

The term "Borings" as used in this Standard Operating Procedure applies to any drilled hole made during the course of a remedial investigation which is not completed as a well. This includes soil test borings, soil sampling borings, and deep stratigraphic borings. Whether completed to the planned depth or aborted for any reason prior to reaching that depth, borings will be grouted and normally closed within 4 hours, or within 4 hours or completion of logging of completion of logging.

3.2.1 Shallow Borings not Penetrating Water Table

Shallow borings made for the collection of subsurface soil samples will be abandoned by backfilling the hole with cuttings from the hole, **if and only if the boring does not penetrate the water table.** Clean sand will be used to make up any volume not filled by the cuttings.

ED_004144A_00000101-00622

3.2.2 Borings Penetrating the Water Table

Shallow borings made for the collection of subsurface soil samples **which penetrate the water table** will be abandoned by grouting the hole from the bottom to the top.

3.2.3 Deep Stratigraphic Borings

Deep stratigraphic borings will normally be located in areas which, by virtue of the historical record, are presumed relatively uncontaminated. Therefore, these borings are usually over 100 ft from any sampling well locations. Any boring located within 10 ft of a proposed well location, or located directly upgradient or downgradient (on anticipated flow line) of a proposed well location, will be abandoned by placing clean sand in the aquifer intervals and bentonite or grout in aquitard intervals as described above. If the boring is over 10 ft from and/or not upgradient of a proposed well location, the boring will be completely filled with grout.

3.3 WELLS

The following procedure applies to wells aborted prior to completion and existing wells determined to be ineffective or otherwise in need of closure.

Prior to abandoning any developed well, the proper well licensing body will be provided written notification along with an abandonment plan for that well.

If the well is within 10 ft of another monitoring well in the same aquifer, or a replacement well is to be installed within 10 ft of the well, casing will be pulled, drilled out, or thoroughly pierced. Using tremie pipe, the hole will then be backfilled with filter pack material opposite sand strata and bentonite or grout opposite substantial (2 ft or thicker) clay and silt strata. Where sand as backfill approaches the ground surface, 2 ft of bentonite will be placed above the sand and below the concrete plug near the surface. Backfill materials will be placed from the bottom of the hole to within 3 ft of the ground surface. These materials will be allowed to settle for 24 hours. The remainder of the hole will be filled with concrete. The surface of the concrete will be mounded, smoothed, and inscribed with "ABD," for abandoned, any assigned well or boring designation, and the date the hole was abandoned. All boring logs, samples, completion records, and abandonment procedures will be included in the records of work on the site cluster.

If the well is not within 10 ft of another monitoring well, and is not to be replaced by another well within 10 ft of the original location, casing will be pulled, drilled out, or thoroughly pierced. Using tremie pipe, grout will be placed from the bottom of the hole to within 3 ft of the ground surface, and allowed to settle for 24 hours. The remainder of the hole will be filled with concrete. The surface of the concrete will be mounded, smoothed, and inscribed with "ABD," for abandoned, any assigned well or boring designation, and the date the hole was abandoned. All boring logs, samples, completion records, and abandonment procedures will be included in the records of work on the site cluster.

ED_004144A_00000101-00623

4. REPLACEMENT WELLS

Replacement wells (if any) will normally be offset at least 10 ft from any abandoned well in a presumed upgradient or crossgradient groundwater direction. Site-specific conditions may necessitate variation to this placement.

5. PRECAUTIONS

None.

ED_004144A_00000101-00624

Standard Operating Procedure No. 033
for
Aquifer (Hydraulic) Testing

Prepared by

EA Engineering, Science, and Technology, Inc., PBC
225 Schilling Circle, Suite 400
Hunt Valley, Maryland 21031

Revision 0
December 2014

This page intentionally left blank

CONTENTS

Page

1. SCOPE AND APPLICATION 1

2. MATERIALS 2

2.1 All Tests 2
2.2 Pumping Tests 2
2.3 Slug Tests 2

3. PROCEDURE 3

3.1 Selection of Test Method 3
3.2 Pumping Tests 4

3.2.1 Constant Discharge 4

3.2.1.1 Field Operations 4

3.2.2 Variable Discharge 7

3.3 Slug Tests 8
3.4 Data Reduction 8

4. FIELD DATA RECORDS 9

4.1 Logbook 9

5. INTERPRETATION OF DATA 10

5.1 Confined Aquifer Methods 10

5.1.1 Theis Method 10

5.1.1.1 Assumptions 10
5.1.1.2 Procedure 11

5.1.2 Modified Theis (Cooper & Jacob; Jacob) Method 12

5.1.2.1 General 12
5.1.2.2 Procedure 13

ED_004144A_00000101-00627

Page

5.1.3 Thiem (Steady State Flow) Method 13

5.1.3.1 Assumptions 13
5.1.3.2 Equations 13
5.1.3.3 Procedure 14

5.2 Bounded, Non-Leaky, Confined Aquifer 14

5.2.1 Assumptions 15
5.2.2 Procedure 16
5.2.3 Modified Theis Non-Equilibrium Method 16

5.2.3.1 Procedure 17

5.2.4 Limitations 18

5.3 Semi-Confined (Leaky) Aquifer 18

5.3.1 Neuman and Witherspoon Method 18

5.3.1.1 Assumptions 19
5.3.1.2 Procedure 19

5.3.2 DeGlee Method and Hantush Approximation 20

5.3.2.1 Assumptions 20
5.3.2.2 Procedure 21

5.3.3 Other Methods for Calculating Leaky Aquifer Parameters 21

5.4 Unconfined Aquifers 21

5.4.1 Neuman Method 21

5.4.1.1 Assumptions 22
5.4.1.2 Procedure 22

5.5 Slug Tests 23

5.5.1 Preliminary to Operation (All Slug Tests) 23
5.5.2 Option 1 – Inert Object Insertion 23
5.5.3 Option 2 – Adding or Removing Water 24
5.5.4 Data Plots 26

ED_004144A_00000101-00628

Page

6. REPORTS 27

7. MAINTENANCE.....27

8. PRECAUTIONS.....27

9. REFERENCES 28

ED_004144A_00000101-00629

This page intentionally left blank

ED_004144A_00000101-00630

1. SCOPE AND APPLICATION

The purpose of this Standard Operating Procedure (SOP) is to define various hydraulic test methods which may be used, to specify how these tests are to be performed, and to provide appropriate methodologies for data reduction and interpretation. This SOP assumes a high degree of technical competency on the part of the investigator, in that certain assumptions and interpretations must be made in the selection of the test and data analysis to achieve valid results.

Aquifer testing is a process performed on selected wells to characterize the **Hydraulic Conductivity**, **Transmissivity**, and **Storativity** of the aquifer into which those wells are installed. Aquifer tests fall into two broad categories: pumping tests and slug tests. Pumping tests and slug tests are relatively inexpensive when compared to the remedial investigation budget as a whole, but it should be noted that, as with many *in situ* tests, aquifer tests may yield non-unique solutions.

Pumping tests are typically performed on wells installed in highly permeable materials, confined aquifers, and in areas of little or no suspected contamination in the groundwater. The principle of pumping tests is to remove water from the aquifer at a sufficient rate and for a sufficiently long period of time to stress the aquifer and cause measurable drawdown in the pumped well and adjacent (10 to several hundreds of feet) observation well(s). The aquifer characteristics can then be calculated by substituting inter-well distances, drawdown and well discharge data into appropriate equations, employing curve matching techniques, or using computer programs to reduce the data.

- Advantages of performing pumping tests are: (1) they encompass large areas, (2) test results are more accurate, (3) they can resolve complex aquifer conditions (e.g., boundaries), (4) time periods and pump rates can be varied, and (5) pumping tests represent remedial actions.

- Disadvantages of pumping tests are: (1) large quantities of potentially contaminated water are generated, (2) the contaminant plume may be moved by the test, (3) they are very costly, and (4) the data produced are averages over large areas.

Single-Well Permeability Tests (Slug Tests) are conducted to determine the characteristics of an aquifer in materials whose conductivity is too low to perform a pumping test, or in aquifers which are highly contaminated. Slug tests consist of inserting and/or removing either a slug of inert material of known volume, or a "slug" of water of known volume. Either method will cause an instantaneous rise or fall and subsequent recovery of the water table within the aquifer.

- Advantages of slug tests are: (1) they provide location-specific data, (2) they are small-scale and unlikely to move the contaminant plume, (3) no contaminated water (other than decontaminated solutions) is generated, (4) they are low cost, therefore (5) high data density is feasible, and (6) they can be used as an aid in selecting an appropriate area to perform pumping test(s).

ED_004144A_00000101-00631

- Disadvantages of performing slug tests are: (1) they provide less precise estimates of parameters; (2) they may not yield values for storativity; (3) they cannot resolve complex geometries; and (4) since they are short-term tests, they cannot resolve long-term events.

2. MATERIALS

2.1 ALL TESTS

The following materials may be required for all tests:

Copy of the site Health and Safety Plan	Health and Safety monitoring equipment, and personal protective equipment as required by the Health and Safety Plan
Calculator	Portable computer[1]
Containers for investigation-derived materials	Program diskettes
Data diskettes	Stopwatches
Decontamination equipment and supplies	

2.2 PUMPING TESTS

The following materials may be required for pumping tests:

Generators (2), fuel, extension cords and/or other source of onsite electrical power	Stainless steel submersible pump with associated tubing, clamps, and wiring
Logbook	Steel register flowmeter or stopwatch and bucket, graduated cylinder, or rain gauge
Pump	Transducer or other water level indicator[1]
Recording barometer or other source of local barometric readings (e.g., local airport or National Weather Service recording station)	Type curves for curve-matching analyses
Semilogarithmic paper-arithmetic vertical scale and logarithmic horizontal scale, or log-log paper	

2.3 SLUG TESTS

The following materials may be required for slug tests:

1. Although removal (or insertion) of larger volumes of water may increase the recovery time(s) of the aquifer to the point that use of electrical water level meters or steel tapes is feasible, piezometers and data loggers are preferred because they tend to provide more complete records with less maintenance and operator error.

ED_004144A_00000101-00632

Test Conducted with Inert Cylinder	
Transducer[2]	Inert, negatively buoyant cylinder of known volume
Logbook and/or field data sheets (examples provided in SOP No. 016)	Type curves for curve-matching analyses
Semilogarithmic paper-arithmetic vertical scale and logarithmic horizontal scale	Slug device (solid stainless steel or a sealed polvyinyl chloride cylinder filled with sand or similar material)
Test Conducted with Input/Output of Water	
Teflon bailer with Teflon-coated stainless steel leader and rope or pump	
— OR —	
Stainless-steel submersible pump or centrifugal pump	Pump wiring
Teflon or polyethylene flexible piping	Steel register flowmeter
Generator and fuel or other onsite source of electricity	American Society for Testing and Materials (ASTM) Type II water
Stainless-steel hose clamps	
— AND —	
Logbook	Type curves for curve-matching analyses
Semilogarithmic paper	Approved water and/or containers for removed water as required in SOP No. 042
Transducer or other water level indicator[1]	

3. PROCEDURE

Regardless of the test method chosen, the following general procedures must be considered:

- All well intrusive equipment must be decontaminated prior to and after use.
- All water removed from the test wells is considered, and must be treated, as purge water.
- The accuracy of the reading(s) from pressure transducer (piezometer) and data logger output should be verified prior to beginning any test, periodically during the test, and immediately after the test by measuring the groundwater level with one of the aforementioned mechanical devices.
- All water level tapes and meters should be calibrated against one master tape which is traceable to the National Institute of Standards and Technology. This calibration should be recorded in the field logbook.
- Repeated measurements at any one well should be made using the same tape.

3.1 SELECTION OF TEST METHOD

Before beginning any aquifer test, the investigator should have a good conceptual model of the site's hydrogeologic condition. This is essential because of the assumptions made in each

2. Field portable computer and associated equipment are considered as optional. Access to a computer will be required to down-load dataloggers.

ED_004144A_00000101-00633

analysis method. If the site conditions do not correspond with the assumptions in a given model, the analysis will be invalid. The conceptual understanding of the hydrogeology of the site can be developed from driller's logs and/or borehole geophysical logs of the wells to be tested, or from previous reports on the hydrogeology of the area. Table SOP033-1 is a decision tree which can be used with this conceptual model to determine the appropriate test/analysis method(s) which may be used at a given site.

3.2 PUMPING TESTS

Pumping tests can be divided into two broad categories: (1) those in which the pumping (discharge) rate is kept constant, and (2) those in which the pumping rate varies over time. All water removed from pumping wells must be disposed of appropriately.

3.2.1 Constant Discharge

These methods require that the discharge or injection rate in the pumping well be kept constant. Of these, the Theis method is the most widely referenced and applied, and serves as the basis for the solution of other, more complex boundary condition problems. Both the Cooper & Jacob and the Jacob modifications to the Theis method recognize that if pumping times are long and/or the distances to control wells are small, the Theis solution will yield a straight line plot on semilogarithmic paper, thereby simplifying the Theis equation. The Thiem method, unlike the Theis/Modified Theis methods, assumes that steady-state (equilibrium) conditions can be achieved in a confined aquifer.

The Theis method is detailed in Section 5.1.1 and ASTM D4106, the modified Theis method in Section 5.1.2 and ASTM D4105, and the Thiem method in Section 5.1.3.

The preceding methods assume that the aquifer being tested is confined. If the aquifer is unconfined or semi-confined (leaky), the preceding methods are invalid. DeGlee developed an equation which assumes that the tested aquifer is either overlain or underlain by a continuous, leaky confining layer which has uniform properties, and that leakage from the aquitard is proportional to the hydraulic gradient across the aquitard. Hantush and Jacob derived the same equation. Hantush later observed that a simpler approximation is possible if the ratio of the distance to monitoring well/leakage across the aquitard is <0.05. As in all preceding cases, radial flow is assumed. The Hantush-Jacob method assumes that no storage occurs in the aquitard. The DeGlee equation and Hantush approximation is provided in Section 5.3.2.

Both Neuman and Witherspoon, and Hantush have proposed methods that take into account storage in the aquitard. The Neuman/Witherspoon method is provided in Section 5.3.1.

3.2.1.1 Field Operations

1. Arrange for all nearby extraction wells and automatic pump controls to be inoperative during the test period.

ED_004144A_00000101-00634

2. Measure and record the distance(s) between observation well(s) and pumping well.

3. Install pressure transducers in the pumping well and each observation well; submerge the transducer in the well to a sufficient depth to provide effective performance. Well bottom sediment plugging of the transducer must be avoided.

4. Perform a two-point calibration of each device as part of the installation, cross-checking data with a calibrated manual tape measure. Note that water levels must be noted and recorded to the nearest 0.01 ft.

5. Start dataloggers at each well several days before the test to record background fluctuations in the groundwater table. It is recommended that one observation well be selected beyond the expected influence of the test to monitor these background water table fluctuations during the actual test.

6. Using either the field barometer of data from a local meteorological station (Section 2.2), record precipitation and barometric pressure before, during and after the test.

7. Calibrate pump, flowmeter, and any other field instruments such as pH meters, etc.

8. Suspend pump at mid-point of pumping well screen and record water level.

   - If the recharge rate of the well is not known, conduct a step-drawdown test (Section 3.2.3) to determine the sustainable yield for the constant discharge test.

   - If the previous step is performed, the aquifer must be allowed to recover prior to performing the constant discharge test. At a minimum, the recovery period between step-test and pump test must be equal to the duration of the step test.

   - Manually check and record the water levels in all test wells before conducting the step test, at the end of the step test, and at 4-hour intervals (minimum) during the recovery period; recording these values in the field logbook.

9. Program the datalogger data acquisition rate as follows:

   - If the only mode of data acquisition is a fixed rate, program the datalogger(s) to record water levels every 5 seconds.

   - If a logarithmic data acquisition rate is possible, use this option.

   - If the data acquisition rate is programmable on the data logger, record data at incrementally lengthening frequencies. The following table is provided as an example, the actual rates at which data are acquired at a given site should be determined based on prior field tests.

ED_004144A_00000101-00635

Time after Aquifer Test Begins	Frequency of Measurements
0-60 minutes	Every 5-10 seconds
61-65 minutes	Every 15 seconds
65-75 minutes	Every 30 seconds
75-120 minutes	Every 5 minutes
120-180 minutes	Every 10 minutes
180 minutes – end of test	Every 30 minutes

10. Collect a complete round of static water levels, verifying transducer readings with a tape or electric water level meter.

11. Start data logger(s).

12. Start pump at previously selected rate. Monitor flow rate using flowmeter or stopwatch and bucket (rain gauge, graduated cylinder, etc.) half-hourly. Record this flow rate and adjust as necessary. Minimize fluctuations in flow rate, especially during the early stages of the test.

13. Periodically download data from the loggers and plot drawdown as a function of time to assess the status of the test in real time. Under no circumstances should the flow rate be varied during the test.[3] If drawdown is either falling substantially above or below predicted levels, then a decision should be made to continue the test at that pumping rate, terminate the test, allow the aquifer to recover, or restart the test at a different pumping rate.

14. Continue pumping and recording water levels for a total period of 72-96 hours (3-4 days). After the drawdown portion of the test, download the data onto data diskettes using the portable computer.

15. Reprogram the dataloggers to record a reading every 5 seconds or a logarithmic or variable interval if available on the datalogger.

16. Turn off the pump and allow the groundwater to recover to within 90 percent of static conditions. The pump should be equipped with a foot valve to prevent backflow of the column pipe fluid.

17. Periodically download data from the logger and plot recovery as a function of time to assess the status of the test in real time.

3. After a period of at least 12 hours into the test, brief interruptions (less than 5 minutes) in pumping due to mechanical failure are acceptable without re-starting the test. All critical equipment should have onsite backups as a contingency against equipment failures. Inasmuch as refueling an onsite generator every 4-10 hours while it is running is considered an unsafe practice, two generators should be provided at the pumping well site to maintain power to the pump during the test.

ED_004144A_00000101-00636

18. After recovery to 90 percent of static conditions, remove the dataloggers, pressure transducers, and cables from all the observation wells. Download the data onto data diskettes using the portable computer.

19. Collect a complete round of water levels from all wells in the monitoring network.

3.2.2 Variable Discharge

Variable discharge methods have been presented by numerous researchers. These methods are performed as a series of constant-rate, stepped changes in discharge rate. These changes in discharge rate may be linear or exponential. Type curves are derived for control wells. These methods can be applied in extensive leaky aquifers, but are generally used in confined aquifers. The only requirement is that the response to a unit stress be known. The step-test is incorporated as a preliminary measure to determine the optimal sustainable discharge rate for a given aquifer (Section 3.2.1.1). Otherwise, variable discharge methods are included herein for the sake of completeness. They are not widely used outside the research environment for aquifer characterization. No further details on variable pump rate tests are provided in this SOP.

Install a variable speed submersible pump and a pressure transducer into the pumping well.

Install pressure transducers into the nearby (closest) observation wells to provide preliminary indications of expected drawdown during the constant-discharge test.

Allow water level(s) to stabilize to original water level after installing the pump and transducer(s).

Program a datalogger to collect readings at 5- to 10-second intervals. If logarithmic programming is available, this collection period may be expanded to 1-minute increments by the completion of each step, where upon 5- to 10-second intervals will again be required to coincide with the start of the next step.

Measure static water levels from all wells expected to be influenced by the test, and calibrate pressure transducers. Record this information in the field logbook and field data sheets.

Select the pumping rates for the step-test. Four 100-minute steps should be run at steadily increasing flow rates. The flow rates should be selected, based on a preliminary estimate of a sustainable rate (ESR) as follows:

Step	Duration (minutes)	Pumping Rate (%)
1	100	25
2	100	50
3	100	100
4	100	125

ED_004144A_00000101-00637

Program the dataloggers, calibrate the pump to the initial flow rate, and initiate the test at 25 percent ESR. At the completion of the first step, increase the pumping rate to 50 percent ESR as instantaneously as possible. The pump should not be shut off between steps. At the completion of the second step, increase the flow rate to 100 percent ESR as instantaneously as possible. At the completion of the third step, increase the flow rate to 125 percent ESR as instantaneously as possible. At the completion of the fourth step, shut off the pump and record the recovery of water levels to at least 90 percent of static conditions.

During the test, plot drawdown in the pumping well on both arithmetic and semi-logarithmic graph paper to assess the performance of the test in real time. Make any adjustments to the test as appropriate, i.e., the addition of a fifth step at a higher rate if the aquifer does not appear to be adequately stressed, or termination of the test if the well is drawn dry.

At the conclusion of the test, analyze the data and select a pumping rate for the constant-discharge test. This rate should be sustainable for the anticipated duration of the test, and place the maximum stress on the aquifer.

Calibrate the variable speed pump to the selected rate so that at the start of the constant discharge test early fluctuations in flow rates will be minimized.

Allow the aquifer to fully recover for a period equal to or greater than the duration of the step-test prior to initiating the constant-discharge test.

3.3 SLUG TESTS

Slug tests involve the use of a single well, and evaluating its response to an instantaneous raising and/or lowering of the water level within the casing. If the well is poorly designed or poorly developed, the test may end up evaluating the performance of the well screen and/or filter pack rather than the aquifer.

Slug tests are usually of short duration, usually less than 5 minutes. The first 30 seconds are the most important in respect to data collected. Piezometers and digital data loggers are, therefore, a must.

3.4 DATA REDUCTION

If the data were recorded by the datalogger as feet of water above the pressure transducer, reduce these data to potentiometric head (in feet), relative to the initial water level as measured from the top of the casing. Record this with the respective changes in time. For each piezometer or well, tabulate the pre- and post-test water levels, dates, clock times, and times since pumping started or stopped.

Tabulate measurements of the rate of discharge at the control well, date, clock time, time since pumping started, and method of measurement.

ED_004144A_00000101-00638

Prepare a written description of each well, describing the measuring point, giving its elevation and the method of obtaining the elevation, and the distance of the measuring point above the mean land surface.

Once the data are collected and reduced, a variety of methods may be used to calculate aquifer parameters from pumping test data. Refer to Section 5 for analytical methods applied to test data.

Data can also be reduced electronically when downloaded from the transducers into software such as AQTESOLV®; this is software designed to calculate hydraulic conductivity, storativity and other aquifer properties from data sets collected during slug and aquifer (pumping) tests.

Text files, which are generated by commonly used pressure transducers, can be imported into the software and data can also be manually entered or pasted from a spreadsheet. After importing, the raw data can be manipulated using mathematical functions. For example, hydraulic head data can be converted to drawdown data. The program will also produce visual and automatic curve matching methods for confined, unconfined and leaky aquifers. Visual curve matching is analogous to traditional methods of aquifer test analysis with graph paper and type curves. The software is also capable of producing error logs which enable the user to quickly identify any deficiencies or inconsistencies detected in the data set.

4. FIELD DATA RECORDS

4.1 LOGBOOK

Only one site or installation per logbook, and only one slug test per data table (see below). The first page must include the well number, location, date of test, persons conducting the test, and reference plane for drawdown measurements. Next page(s) must be in table format with the columns designating time/date, water volume withdrawn/added or displaced by inert cylinder, water levels, etc.

Test data must be entered in a table as data are acquired. Data must include sufficient information to indicate that the water level was stable before the test, during equilibrium, and after the test(s).

ED_004144A_00000101-00639

5. INTERPRETATION OF DATA

5.1 CONFINED AQUIFER METHODS

5.1.1 Theis Method

The Theis test method involves pumping a well (pumped well) at a constant rate (Q) and measuring drawdown (s) in an adjacent observation well. Theis assumed that groundwater flow in an aquifer is analogous to heat flow in a solid and derived the following equation:

$$s=\frac{Q}{4\pi T}\int_{r^2\frac{S}{4Tt}}^{\infty}\left(\frac{e^{-u}}{u}\right)du$$

Equation 1

where

s = Drawdown.
r = Radial distance to observation well.
Q = Pumping (discharge) rate.
T = Transmissivity (K × aquifer thickness).
K = Conductivity.
S = Storativity.
t = Time (since pumping began).

and

$$u=\frac{r^2S}{4Tt}$$

Equation 2

If the integral is expressed as the well function W(u), then the equation can be written as:

$$s=\frac{Q}{4\pi T}W(u)$$

Equation 3

which can be also written as:

$$T=\frac{Q}{4\pi s}W(u)$$

Equation 4

or

$$S=\frac{4Tt}{r^2}u$$

Equation 5

5.1.1.1 Assumptions

To permit an analytical solution for non-steady, radial flow into the well, the Theis method makes the following assumptions. Most of these assumptions are incorporated in the other analysis methods detailed herein. Only exceptions or additions to these assumptions will be noted in each method.

ED_004144A_00000101-00640

- The aquifer has seemingly infinite areal extent compared to the well, whose diameter is assumed infinitesimally small.
- The aquifer is homogeneous, isotropic, of uniform thickness, and horizontal.
- The head is uniform and constant prior to the test.
- Darcy's Law is valid.
- The well is pumped at a constant rate.
- Water is discharged from storage instantaneously.
- The well screen fully penetrates the aquifer.
- Flow within the aquifer is radial to the well and strictly horizontal.
- Drawdown data are taken from an adjacent observation well.

One additional assumption is made in this SOP, which was not made by Theis: The pumping well has been previously sampled and analysis of the groundwater at that site is not grossly contaminated (e.g., no non-aqueous phase liquids).

5.1.1.2 Procedure (see also ASTM D4106-91 and D4050-91)

Field Operations – Constant Discharge Test (Refer to Section 3.2.1)

Data Plots

1. Prepare a type curve of W(u) over 1/u on log-log paper. Figure SOP033-1 is an example of a type curve. Tables of data used to generate this curve may be found in ASTM D4106-91, ASTM D5270-92, or in most hydrology texts such as Fetter or Dominico[4]. It is recommended that this plot be copied onto tracing paper, drafting film, or an overhead viewer film copy be made to facilitate later steps. NOTE: W(u) over u can be plotted if preferred, but will require additional computational steps if used.

2. Plot drawdown over time for each observation well on log-log paper which has the same scale as the type curve (above). Note that for a single observation well, drawdown can be plotted as a function of time (t). However, for multiple observation wells, drawdown can be plotted as a function of t/r2, where r = radial distance from the pumping well to the observation well in which the measurements were made. This is done to normalize the data and allow comparison between wells.

4. See Section 6 for complete citations of these references.

ED_004144A_00000101-00641

3. Superimpose the type curve and the plot of observation well data. **Keeping both the X and Y axis of each plot parallel**, position the two curves to obtain the best match when overlain. NOTE: If only paper copies of both plots are available, a light table or brightly lit window will be required for this step.

4. Select a match point on the overlapping portion of the two graph papers such that the values for that point simplify the calculations (e.g., even log cycles of [W(u), 1/u] — [1,1]; [1,10] etc.).

5. Read coordinates for W(u), 1/u, s, and t.

6. Substitute the match point values for the appropriate variable in Equations 3, 4, and 5.

7. Repeat for each observation well.

5.1.2 Modified Theis (Cooper & Jacob; Jacob) Method (see also ASTM D4105-91)

5.1.2.1 General

From Equation 1, we have:

$$\int_u^{\infty}\left(\frac{e^{-u}}{u}\right)du = W(u) = -0.577216 - \log_e u + u - \frac{u^2}{2!2} + \frac{u^3}{3!3} - \frac{u^4}{4!4} + \ldots$$

Equation 6.

Jacob noted that as values of u become small, the value of the series to the right of logeu becomes insignificant. That is the series becomes equal to or less than 0.01. The value of u decreases as the value of t (time) increases, and as the value of r (radial distance to observation well) decreases. Therefore, for long pumping times and/or observation wells reasonably close to the pumping well, the Theis equation can be stated as:

$$s = \frac{Q}{4\pi T}\left[-0.577216 - \ln\left(r^2\frac{S}{4Tt}\right)\right]$$

Equation 7.

Lohman was then able to show the following relationships:

$$T = \frac{2.3Q}{4\pi\Delta s/\Delta\log_{10}t}$$

Equation 8

and

$$T = \frac{2.3Q}{4\pi\Delta s/\Delta\log_{10}r}$$

Equation 9

where

$\Delta s/\Delta \log 10t$ = The drawdown (measured or projected) over one log cycle of time.
$\Delta s/\Delta \log 10r$ = The drawdown (measured or projected over one log cycle of radial distance from the control well.

ED_004144A_00000101-00642

5.1.2.2 Procedure

Field Operations (see Field Operations under Section 3.2.1.1)

Data Plots

1. Plot drawdown over time (log scale) on semilog paper.

2. Draw a best fit straight line through the later portion of the data and project it back to s = 0.

3. Read t0 as the time corresponding to the s = 0 point.

4. Solve for T using:

$$T=\frac{2.3Q}{4\pi\Delta s}$$

Equation 10

5. Solve for S using:

$$S=\frac{2.25Tt_0}{r^2}$$

Equation 11

where

t0 = the intercept of the line when extended to the zero drawdown axis.

6. Solve for K (K = T/aquifer thickness). Aquifer thickness = screened interval (see assumptions in Section 5.1.1.1).

7. Repeat for each monitoring well.

5.1.3 Thiem (Steady State Flow) Method

5.1.3.1 Assumptions

All of the Theis assumptions hold except that equilibrium has been reached between discharge and drawdown. Note that this condition is theoretically impossible in a confined aquifer where all discharge is derived from storage.

5.1.3.2 Equations

When these assumptions are met, the following equation expresses groundwater flow in the confined aquifer:

$$Q=\frac{2\pi T(s_1-s_2)}{\ln(\frac{r_2}{r_1})}$$

Equation 12

ED_004144A_00000101-00643

where

Q = Well discharge.
T = Aquifer transmissivity.
r1 and r2 are respective distances of OW-1 and OW-2 from the pumping well.
s1 and s2 are respective steady-state drawdowns in the observation wells.

Note that the Thiem equation is designed to solve for transmissivity only, and cannot be used to solve for storativity.

5.1.3.3 Procedure

Field Operations

1. Follow Steps 1 through 9 in Section 3.2.1.

2. Continue pumping until steady-state conditions are reached. This equilibrium is defined as the time when variations of drawdown with respect to time are negligible. Note that this may require considerably more time than with either the Theis or Modified Theis methods described above.

Data Plots Method 1

1. Substitute the steady-state drawdown of the two observation wells into Equation 12 along with the values of r and Q. Solve for T.

2. Repeat with all possible combinations of observation wells to obtain the mean transmissivity of the aquifer.

Data Plots Method 2

1. Plot the observed steady-state drawdown of each observation well over distance (log scale) to the pumping well.

2. Construct a best-fit straight line through the plotted points.

3. Determine the maximum drawdown per log cycle.

4. Substitute this value of (s1 - s2) in Equation 12 along with Q and solve. Note that the term ln(r2-r1) is taken to ln(10) equal to 2.30.

5.2 BOUNDED, NON-LEAKY, CONFINED AQUIFER

The test methods described in this section are essentially duplicates of the Theis and Modified Theis methods which are detailed above. The principal differences are that, by definition, a

ED_004144A_00000101-00644

bounded aquifer is limited in its areal extent by a fully-penetrating linear boundary, which is either a constant head (e.g., stream or lake) or a no-flow boundary (e.g., impermeable, or significantly less permeable geologic formation). These conditions are illustrated on Figure 2.

As stated, the equations used to evaluate data derived from bounded wells are modifications to the basic Theis equations. Drawdown(s) at any point in the aquifer is defined as the sum of the drawdown due to the real ($_r$) and image ($_i$) wells such that:

$$s_0 = s_r \pm s_i$$

Equation 13

so that Equation 1 can be rewritten as:

$$s = \frac{Q}{4\pi T}[W(u_r) \pm W(u_i)] = \frac{Q}{4\pi T}\sum W(u)$$

Equation 14

where

$$u_r = \frac{r_r^2 S}{4Tt}$$

Equation 15

and

$$u_i = \frac{r_i^2 S}{4Tt}$$

Equation 16

so that:

$$u_i = \left(\frac{r_i}{r_r}\right)^2 u_r$$

Equation 17

or

$$u_i = k_i^2 u_r$$

Equation 18

where

$$K_i = \frac{r_i}{r_r}$$

Equation 19.

NOTE: K_i is a constant of proportionality and should not be confused with the hydraulic conductivity.

5.2.1 Assumptions

All assumptions listed under the Theis method apply with these exceptions:

- The non-leaky aquifer is of infinite areal extent except where limited by linear boundaries.
- The boundaries are vertical planes of infinite length, which fully penetrate the aquifer.
- The hydraulic boundaries are perfect. Impermeable boundaries yield no water to the aquifer; recharge boundaries are in perfect hydraulic connection with the aquifer.

ED_004144A_00000101-00645

5.2.2 Procedure (see also ASTM D5270-92)

Field Operations (see Section 3.2.1.1)

Data Plots

1. Generate a family of type curves for the solution of the modified Theis formula (Kl). This family of curves should include curves for both discharging and recharging image wells. Plot the coordinates of ∑W(u) on the vertical axis and 1/u (Figure 3). It is recommended that this plot be copied onto tracing paper, drafting film, or an overhead viewer film copy be made to facilitate later steps.

2. Plot drawdown (s) over t/r2 for each observation well on log-log paper which has the same scale as the type curve (above). NOTE: **t=time, r=radial distance from pumping well.**

3. Superimpose the type curves and the plot of observation well data. **Keeping both the X and Y axis of each plot parallel**, position the two curves to obtain the best match when overlain. NOTE: If only paper copies of both plots are available, a light table or brightly lit window will be required for this step.

4. Select a match point on the overlapping portion of the two graph papers such that the values for that point simplify the calculations (e.g., even log cycles of [∑W(u), 1/up] — [1,1]; [1,10] etc.).

5. Read coordinates for ∑W(u), 1/up, s, and t/r2.

6. Substitute the match point values for the appropriate variable in the equations below:

Transmissivity = $$T=\frac{Q}{4\pi s}\sum W(u)$$

Equation 20

Storativity = $$S=4T\left(\frac{t}{r^2}\right)u$$

Equation 21

7. For each OW, determine the distance from the image well (r_i) using the following:

$$r_i=K_f r_r$$

Equation 22

8. Repeat for each observation well.

5.2.3 Modified Theis Non-Equilibrium Method

As in the case of a non-bounded aquifer, the hydraulic parameters can also be determined using a Modified Theis equation and a straight line (semi-log) plot of s and log10t.

ED_004144A_00000101-00646

5.2.3.1 Procedure

1. Refer to Section 5.1.2 (above) and ASTM D4105-91 for details on plotting the data and the equations to be used in calculating transmissivity and storativity using this method. Note that the data will define two rather than one straight line portions. This is due to the image well effect of the boundary conditions.

2. Select a convenient value of s within the initial straight-line part of the plot. Drawdown represented by this portion of the curve has not been affected by the boundary. Therefore, s = sr and the corresponding value of tr corresponds to sr.

3. Graphically extend the initial straight-line part of the curve to the right. The departure of the measured drawdown from the extended line represents the drawdown due to the presence of the boundary. This effect is also referred to as the image well drawdown, si.

4. Select a point on the second straight-line such that si = sr. Note the value of time ti which corresponds to si.

5. Since tr and ti are selected such that si = sr, then ur = ui and (Equation 23)

$$\frac{r_r^2 S}{4Tt_r} = \frac{r_i^2 S}{4Tt_i}$$

so that:

$$K_i = \frac{r_i}{r_r} = \sqrt{\frac{t_i}{t_r}} \qquad \textbf{(Equation 24)}$$

6. Determine the distance to the image well using Equation 22.

7. Repeat this calculation for each observation well.

Determine the location of the boundary as follows:

- Accurately plot the locations of the control and observation wells on a map.

- With a compass, using each observation well as the center point, draft a circle which has a radius equal to the distance from that well to the boundary.

- The image well is located at the intersection of these circles. If the circles do not intersect exactly, the probable well location is at the centroid of the intersections, or the polygonal area bounded by the circles in the case of no overlap.

- Draw a straight line from the pumping well to the image well. The boundary is defined as the perpendicular bisector to this line at the image well.

ED_004144A_00000101-00647

5.2.4 Limitations

The following caveats apply to either of the above two methods:

- In cases where this test method is employed to locate an unknown boundary, a minimum of three observation wells is required to accurately locate the image well which is the boundary. Two observation wells will yield two possible locations for the image well. One observation well will indicate the presence of a boundary, and the distance (radius) from the observation well, but the image well will be located somewhere on that surface.

- The effects of a constant head (recharging) boundary are indistinguishable from those of a leaky aquifer. It is, therefore, imperative that care be taken in developing the conceptual model of the geohydrologic system being studied prior to testing.

5.3 SEMI-CONFINED (LEAKY) AQUIFER

In some instances, the confining beds either above or below the aquifer will not be completely impermeable. In these cases, the aquifer is said to be "leaky." This condition can be readily determined from the Theis s over t plot on log-log paper. In the initial phase of pumping, the plot will look like the Theis "type" curve. As pumping continues and the aquifer is depressurized (piezometric head decreases), a gradient within the overlying and/or underlying aquitard(s) is induced. Instead of the expected type curve, the plot will be somewhat flattened, and values for s may actually decrease over time if the vertical component of groundwater flow through the aquitard(s) is sufficiently high. The log-log plot will yield a considerably flattened curve. This is one of the reasons it is recommended that these log-log plots be done in the field, so that such conditions can be detected early, and steps be taken to minimize any adverse environmental impact of aquifer cross contamination.

5.3.1 Neuman and Witherspoon Method

The Neuman and Whitherspoon approach to solving the problem of evaluating a leaky aquifer is two-fold. First, they assumed that if the distance between observation well and pumping well is minimized, the area of aquitard subjected to stress and possible leakage is minimized, and the Theis method could be employed. Next, they assumed that if only early time drawdown data were used, the effects of leakage could be further reduced. This is accomplished by closely monitoring the response curve(s) for transducers both in the aquifer and in the aquitard(s) themselves. When the s over t curve begins to flatten, indicating leakage, this is defined as the end of valid aquifer data. Data acquired beyond that point contains components of horizontal (aquifer) flow, and vertical (aquitard) flow. In order to accurately calculate the aquitard parameters, an undisturbed sample of the aquitard must be taken (ASTM D1587-83). The laboratory tests will provide values for storage of the aquitard(s). Conductivity within the aquitard(s) is provided from the s over t plots for transducers located within the aquitard.

ED_004144A_00000101-00648

5.3.1.1 Assumptions

The same assumptions as in the Theis method hold with the following differences:

- The aquifer is leaky.
- The aquifer and aquitard both have a seemingly infinite areal extent.
- Flow in the aquitard is vertical.
- Drawdown is negligible in both aquifer and aquitard.
- The aquitard has storage.
- The overlying and/or underlying aquifer(s) is capable of releasing water to the pumped aquifer through a decline in head.

5.3.1.2 Procedure

Field Operations

1. See field operations in Section 3.2.1.1.
2. In addition, set piezometers within the aquitard at 0.25 and 0.50 aquitard thickness. These should be set at essentially the same location as the observation well, either in the observation well or in a separate borehole adjacent to the observation well, and the same radial distance from the pumping well.

Data Plots

1. Prepare log-log plots of s over t for the observation well and transducers placed in the aquitard.
2. Use the valid early-time data and the Theis method to calculate the pumped aquifer parameters.
3. Calculate several s'/s ratios for the early time period used in b above.
4. Calculate the parameter tD — a "dimensionless" time parameter — using the following equation:

$$t_D = \frac{Kt}{Sr^2}$$

Equation 25

ED_004144A_00000101-00649

where

t = Time.
r = Radial distance to observation well (and transducers).
K = Pumped aquifer hydraulic conductivity.
S = Pumped aquifer storativity.

5. Using the value tD calculated in d (above), and s'/s, determine a value for t'D using Figure 4.

5.3.2 DeGlee Method and Hantush Approximation

DeGlee developed the following equation for steady-state drawdown within an aquifer with leakage from an aquitard proportional to the hydraulic gradient across the aquitard:

$$s=\frac{Q}{2\pi T}(K_0)\frac{r}{L}$$

Equation 26

where

T = Transmissivity.
s = Steady-state drawdown in observation well at distance r from pumping well.
Q = Discharge rate of pumping well.
L = Tc = leakage factor.
c = D'/K = hydraulic resistance of the aquitard.
D' = Saturated thickness of the aquitard.
K' = Hydraulic conductivity of the aquitard for vertical flow.
K0(x) = Modified bessel function of the second kind and of zero order (Hankel function).

Hantush observed that if r/L is small (0.05), Equation 14 can be estimated by:

$$s=2.30\frac{Q}{2\pi T}(\log 1.12\frac{L}{r})$$

Equation 27

5.3.2.1 Assumptions

See Section 5.3.1.1.

- Flow to the pumping well is in steady state.
- L is greater than 3D, where D is the saturated thickness of the aquifer.

ED_004144A_00000101-00650

5.3.2.2 Procedure

Field Operations

Field methods are identical to the Thiem method in Section 5.13.

Data Plots

Plot s over r (log scale) on semi-log paper where r/L is small, the points fall in a straight line plot. Where r/L is large, the curve approaches the zero-drawdown axis asymptotically.

5.3.3 Other Methods for Calculating Leaky Aquifer Parameters

The Neuman and Witherspoon Unsteady-state flow method, the Hantush Curve-Fitting Method, the Hantush Inflection Point Method, and the Walton Method. As before, these are mentioned for the sake of completeness, but not detailed herein.

5.4 UNCONFINED AQUIFERS

Flow to a pumping well in an unconfined (phreatic or water table) aquifer occurs in three phases. In the first phase, pumping has just begun, and the aquifer acts like a confined aquifer. Water is derived from storage (expansion of the water, compression of the aquifer). The time over drawdown plot for this phase closely mimics the Theis type curve. During the second phase, delayed yield occurs. This phenomenon results as water remaining in the pores is drained by gravity (specific yield), replenishing the portion of the aquifer supplying water to the well during the first phase, and results in a reduction in rate of drawdown over the first phase, and a flattening of the time-drawdown plot. The third phase brings equilibration in the rate of drawdown and the time-drawdown plot again looks like the Theis curve.

The duration of the first two phases is a function of the ratio of storage (S) to specific yield (Sy). If the ratio is in the range of 10-1 to 10-2, S is relatively large and the first phase drawdown should be significant. This condition is typical of saturated fine-grained sediments such as silts, clays, and fine-grained sands. If the ratio S/Sy is in the range of 10-4 to 10-6, Sy is relatively large, the second phase phenomenon is expected to be dominant, and coarser-grained sediments (sands and gravels) are indicated.

In addition to S/Sy, the distance between pumping well and observation well also affects the time-drawdown plot. As the distance to the observation well increases, the effects of S decrease.

5.4.1 Neuman Method

Flow to a pumping well in an unconfined (phreatic, or water table) aquifer occurs in three stages. During the first stage, the phreatic aquifer behaves like a confined aquifer, instantaneously releasing water from storage (expansion of the water, compression of the aquifer). This is

ED_004144A_00000101-00651

illustrated in Figure 5, where the early portion of the family of drawdown curves closely matches the Theis curve (1/uA). The second phase is termed a period of "delayed yield" or "delayed response," in which the rate of drawdown is lower than that predicted by the Theis curve. During this phase, specific yield, or gravity drainage of water remaining in the pore spaces in the vicinity of the pumping well replenishes the water being removed. During the third phase, the rates of yield and drawdown equilibrate, and the time-drawdown plots again converge on the Theis solution (1/uB).

5.4.1.1 Assumptions

- The same assumptions as listed in Section 5.1.1.1.
- At least one observation well located at r/b ≤ 1, where r = distance between pumping well and observation well, and b = aquifer thickness.

Drawdown in the observation well s ≤0.25 b.

5.4.1.2 Procedure

Field Operations

See Section 3.2.1.

Data Plots

1. Prepare A and B curves (Figure 5); tables of these values can be found in many hydrology texts such as Fetter
2. Plot s over t on log-log paper at the same scale as the Type A and B curves
3. Superimpose the late-time drawdown data over the B curves. Note the value for the curve which best matches the field data.
4. Select a match point which has a value of 1 for as many of the variables as possible.
5. At the selected match point, read values for s, t, W(uB,β) and 1/uB
6. Repeat steps a-e, superimposing the early time data over the A curve which has the same β value as the B curve.
7. Read values for s, t, W(uA,β) and 1/uA
8. Substitute these values in the following equations:

$$T_B = \frac{Q}{4\pi s}(W(u_B'\beta))$$

Equation 28. Transmissivity B curve.

ED_004144A_00000101-00652

$$T_A = \frac{Q}{4\pi s}(W(u_A'\beta))$$

Equation 29. Transmissivity A curve.

$$S_y = \frac{4T_B t u_B}{r^2}$$

Equation 30. Specific Yield.

NOTE: Transmissivities should be within ±10 percent of each other. If they are, their average should be used in the remaining equations, otherwise use the T value from the B curve.

5.5 SLUG TESTS

5.5.1 Preliminary to Operation (All Slug Tests)

Prior to conducting any tests, water level meters, transducers, dataloggers, and other materials should be examined for cleanliness and checked for defects.

Batteries should be checked in the calculator(s), water level meter(s), and datalogger(s).

Decontaminate all intrusive equipment prior to and after use at each location.

Lay plastic sheeting on the ground around the well casing.

Record the well number and other project and site information in the field logbook.

Check the well headspace for the presence of volatile organic compounds using applicable instruments. Record the results in the field logbook.

Measure and record the initial water level in the well and total depth of the well.

NOTE: If the static water level and water levels caused during testing are above the top of the screened, or the well consists of an open hole with no casing, then both rising-head and falling-head tests should be conducted.

If the static water level is at or below the top of the screened or open-hole interval, a rising-head test only should be conducted (i.e., falling-head slug tests are invalid for this situation).

5.5.2 Option 1 – Inert Object Insertion

This procedure describes the use of a solid slug to change the water level in a well.

Select an appropriate transducer for the range of water level change anticipated in the slug test.

ED_004144A_00000101-00653

Submerge the transducer in the well to a sufficient depth to provide effective performance. The range of the transducer must be considered in the determination of the submersion depth. Well bottom sediment plugging of the transducer must be avoided as well as transducer interference by the inert object.

Monitor water level until it returns to original level as measured in Section 5.5.2 before initiating the test.

Tie off the line to a decontaminated, inert cylinder (slug) prior to lowering it into the well. All intrusive equipment must be decontaminated.

"Instantaneously," but smoothly, lower the cylinder into the well, displacing the water and thereby raising the water level.

Measure and record water levels in the well initially. Record the water level response during cylinder insertion and every 5-10 seconds with the cylinder in place. Record the falling water level and time of each measurement in the field logbook and/or Field Permeability Test Data Sheet.

NOTE: If transducer and datalogger are employed, care must be taken to create backup copies and/or hardcopies of these data as soon as practicable.

Record data until water level has stabilized, or approximately 90 percent of the change in the water level has dissipated. The time for this to occur may range from less than 1 minute to more than a day. Usually, it is not necessary to continue measurements for more than a few hours because longer periods indicate extremely low hydraulic conductivity. Choose the time interval between measurements according to how rapidly the water level approaches the static level. From 10 to 30 measurements should be obtained at approximately equal time intervals during the recovery.

"Instantaneously," but smoothly, remove the cylinder from the well.

Conduct a rising head slug test by measuring the response of the water level to the removal of the cylinder. Record water levels and time until the water level equilibrates to 90 percent of the initial level, and record data as in Section 5.5.2.

Calculate the aquifer hydraulic conductivity using appropriate equations.

Decontaminate the slug and the tape or meter.

5.5.3 Option 2 – Adding or Removing Water

This procedure describes the use of a pump to change water level in a well and a datalogger and pressure transducer to measure the water level. The technique is intended for use in wells installed in highly permeable materials where the use of a slug may not induce a measurable

ED_004144A_00000101-00654

change in the water level. However, this technique can also be used in wells installed in low permeability materials. The methods described for the transducer/datalogger are also appropriate when using a solid slug or bailer for inducing a change in the water level in a well.

Select an appropriate transducer for the range of water level change anticipated in the slug test.

Submerge the transducer in the well to a sufficient depth to provide effective performance—usually this is to a depth at which its pressure rating is not exceeded but no less than 5 ft of water is above the transducer. The range of the transducer must be considered in selection of the submersion depth.

Check the transducer calibration at two different depths in the well. The transducer should be at least 1 ft above the bottom of the well to prevent bottom sediment from fouling the transducer and preventing accurate readings.

Turn on the datalogger to view the water level value (either in depth of submergence or depth to water).

IF REMOVING WATER: Insert the pump piping with check valve (if using a centrifugal pump) or submersible pump with check valve into the well at least 4 t below the water table but above the transducer. Attach pump discharge to treatment system, portable tanks, or drums to containerize the effluent if it is known or suspected to be contaminated.

— OR —

IF ADDING WATER: Insert piping from water source to a depth of about 1 ft below the surface of the water table (this will prevent undue aeration of the water column and possible anomalous readings).

Monitor water level until it returns to original level as measured in Section 3.1.2 before initiating the water addition/extraction test.

View water level value on datalogger. Values (either depth of submergence or depth to water) should be stable and approximately the same range as in Step C; if not, wait until the water level equilibrates to the initial value.

Begin logging and record the time.

Turn pump on until 4-5 ft of drawdown occurs or the well (at the depth of the poly pipe or pump) goes dry.

— OR —

Turn on water at supply tank until the water level in the well rises a minimum of 5 ft.

ED_004144A_00000101-00655

Shut off pump or water supply at the tank. Remove piping or pump to a position above the initial water level (water removal) or remove from the well (water addition or removal).

Record water levels and water volumes removed/added during the entire test.

Record water levels until approximately 90 percent of the change in the water level has dissipated. The time for this to occur may range from less than 1 minute to more than a day. Usually, it is not necessary to continue measurements for more than a few hours, because longer periods indicate extremely low hydraulic conductivity.

Periodically collect water levels manually using an electronic water level meter of tape to verify the datalogger values.

End logging and record the time. Remove the poly pipe and/or pump and pressure transducer and transfer data in datalogger to a computer disk. Make a backup copy of the file and record the file information in the field logbook.

Decontaminate intrusive equipment.

Calculate the aquifer hydraulic conductivity using appropriate equations.

5.5.4 Data Plots

Record the water level in the well immediately after the inert object emplacement/withdrawal (Option 1) or at the equilibrium of the water table (Option 2). This is the initial water level reading.

Following the initial water level reading, the water level in the well is continuously recorded along with the time of the level measurement.

The ratio of the initial water level to the change in head is plotted with respect to time.

The ratio is plotted on the arithmetic scale and time is plotted along the logarithmic scale.

The relationships of the initial water level to changes in the water level are a function of parameters shown on Figure 6 and the formation transmissivity. The values of the function relationship are plotted for a series of transmissivities and are depicted in Figure 5.

The resulting field data plot (curve) is compared to a series of type curves (Figure 5). The field-data curve is placed over the type curves with the arithmetic axis coincident. The field data curve is matched to the type curve that has the same curvature.

The formation transmissivity is determined.

The value of storativity is calculated.

ED_004144A_00000101-00656

6. REPORTS

After performing hydrologic tests, the contractor will generate a report which must contain a minimum of the following elements:

- A field data report including a site description, plots of water level and discharge with time, and a precursory analysis of data.
- The introduction should include the purpose of the test, dates and times water-level measurements were begun, dates and times discharge or injection was begun and ended, and the average rate of discharge or injection.
- Well logs (including construction diagrams) of all control wells, observation wells, and piezometers.
- Site map showing all well locations, distances between wells, and locations of all geologic boundaries or surface waterbodies which might affect the test.
- The locations of wells and boundaries which may affect the test generally need to be accurate within a radial distance of ±0.5 percent. For large-scale studies, it may be sufficient to locate wells from maps or aerial surveys. Small-scale studies require that well locations be surveyed. Additionally, other features such as faults, streams, and canals should be located. Well deviation surveys, which determine true horizontal distance between well screens, may be necessary if test wells are deep relative to their spacing.

7. MAINTENANCE

The transducers must be kept clean, operable, and thoroughly tested before emplacement in the well. A plugged or malfunctioning piezometer will give erroneous responses or fail to give any response.

8. PRECAUTIONS

In the case of slug tests, care should be exercised to maximize the efficiency of the well. If there is a great disparity between the conductivity of the aquifer and that of the well screen/filter pack, one may find that the slug test has accurately measured the conductivity of the well screen/filter pack rather than the aquifer.

Transducers should be double checked to ensure that they are calibrated in the correct water level range. Water level and well depth should be checked with an electronic water level meter or steel tape before and after placing the transducers.

ED_004144A_00000101-00657

Be sure that the wells used are well developed.

If the water removed is contaminated and cannot be discharged at the surface, a tank of sufficient size to hold the effluent of the pumping test must be available.

9. REFERENCES

ASTM International. D4043-91 Guide for Selection of Aquifer-Test Method in Determining Hydraulic Properties by Well Techniques.

———. D4044-91 Test Method for (Field Procedure) for Instantaneous Change in Head (Slug Tests) for Determining Hydraulic Properties of Aquifers.

———. D4050-91 Test Method (Field Procedure) for Withdrawal and Injection Well Tests for Determining Hydraulic Properties of Aquifer Systems.

———. D4104-91 Test Method (Analytical Procedure) for Determining Transmissivity of Nonleaky Confined Aquifers by Over-Damped Well Response to Instantaneous Change in Head (Slug Test).

———. D4105-91 Test Method (Analytical Procedure) for Determining Transmissivity and Storage Coefficient of Nonleaky Confined Aquifers by the Modified Theis Nonequilibrium Method.

———. D4106-91 Test Method (Analytical Procedure) for Determining Transmissivity and Storage Coefficient of Nonleaky Confined Aquifers by the Theis Nonequilibrium Method.

———. D4630-86 (1991) Test Method for Determining Transmissivity and Storativity of Low-Permeability Rocks by *In Situ* Measurements using the Constant Head Injection Test.

———. D4631-86 (1991) Test Method for Determining Transmissivity and Storativity of Low-Permeability Rocks by *In Situ* Measurements using the Pressure Pulse Technique.

———. D5269-92 Test Method for Determining Transmissivity of Nonleaky Confined Aquifers by the Theis Recovery Method.

———. D5270-92 Test Method for Determining Transmissivity and Storage Coefficient of Bounded, Nonleaky, Confined Aquifers.

Bedinger, M.S. and J.E. Reed. 1990. Practical Guide to Aquifer-Test Analysis, U.S. Environmental Protection Agency, Office of Research & Development Environmental Monitoring Systems Laboratory.

ED_004144A_00000101-00658

Cooper, H.H., Jr., J.D. Bredehoeft, and I.S. Papadopulos. 1967. Response of a Finite Diameter Well to an Instantaneous Charge of Water, *in* Water Resources Research, Vol. 3, No. 1, pp. 263-269.

Dominico, P.A. and F.W. Schwartz. 1990. Physical and Chemical Hydrogeology John Wiley & Sons, Inc. 824 pp.

Driscoll, F.G. 1986. Groundwater and Wells, Johnson Division, St. Paul, Minnesota 55112.

Fetter, C.W., Jr. 1980. Applied Hydrogeology, C. E. Merrill Publishing Company, Columbus, Ohio 43216. 488 pp.

Fletcher, G.D. 1987. Groundwater and Wells, 2nd Edition, Johnson Division, St. Paul, Minnesota.

Freeze, R.A. and J.A. Cherry. 1979. Groundwater, Prentice Hall, Inc.

Kruseman, G.P., and N.A. deRitter. 1990. Analysis and Evaluation of Pumping Test Data. 2nd Edition, International Institute for Land Reclamation and Improvement, The Netherlands.

Lohman, S.W. 1972. Groundwater Hydraulics, USGS Prof. Paper 708.

Neuman, S.P. and P.A. Witherspoon. 1968. Theory of Flow in Aquicludes Adjacent to Slightly Leaky Aquifers, *in* Water Resources Research, Vol. 4, No. 1. pp.103-112. February.

———. 1969a. Theory of Flow in a Confined Two Aquifer System, *in* Water Resources Research, Vol. 5, No. 4, pp. 803-816. August.

———. 1969b. Applicability of Current Theories of Flow in Leaky Aquifers, *in* Water Resources Research, Vol. 5, No. 4, pp. 817-829. August.

———. 1972. Field Determination of the Hydraulic Properties of Leaky Multiple Aquifer Systems, *in* Water Resources Research, Vol. 8, No. 5, pp. 1284-1298. October.

Papadopulos, S.S., J.D. Bredehoeft, and H.H. Cooper. 1973. On the Analysis of "Slug Test" Data in Water Resources Research. Vol. 9 No. 4, pp. 1087-1089. August.

Reynolds, S.D. 1993. Design and Analysis of Aquifer Tests, Association of Engineering Geologists short course, San Antonio, Texas.

Todd, D.K. 1980. Groundwater Hydrology, John Wiley and Sons, Inc.

ED_004144A_00000101-00659

This page intentionally left blank

ED_004144A_00000101-00660

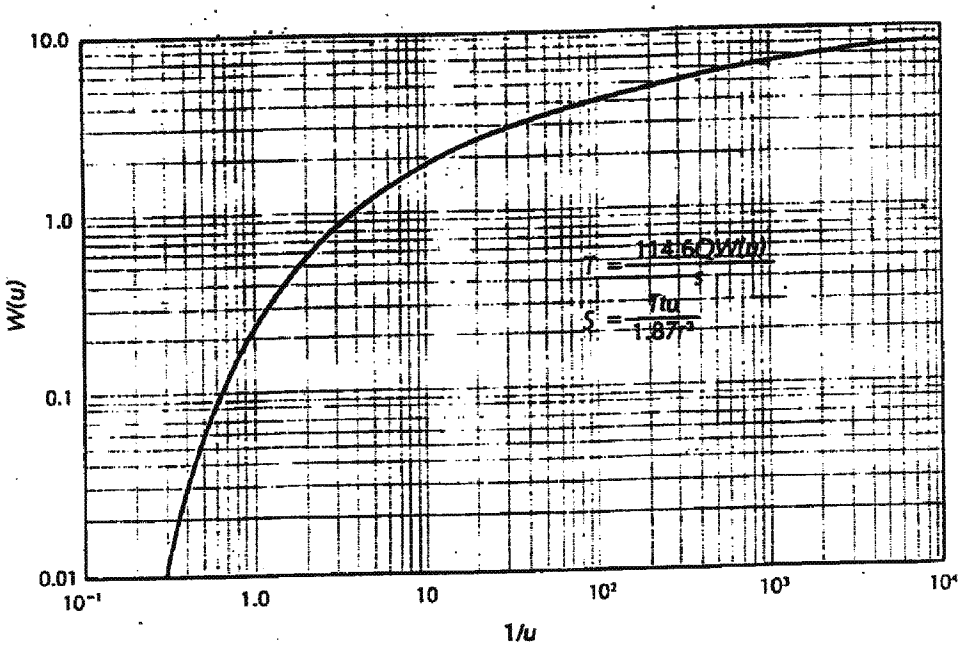

Figure SOP033-1. Theis type curve (after Fetter).

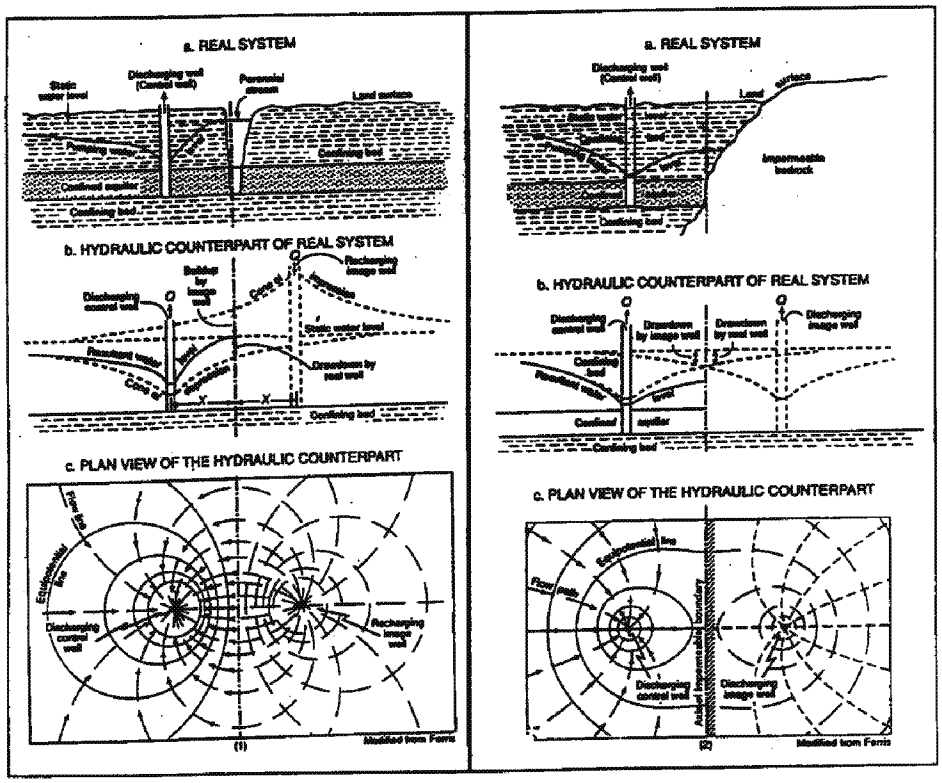

Figure SOP033-2. Illustration of boundary conditions
(after ASTM D-5270-92).

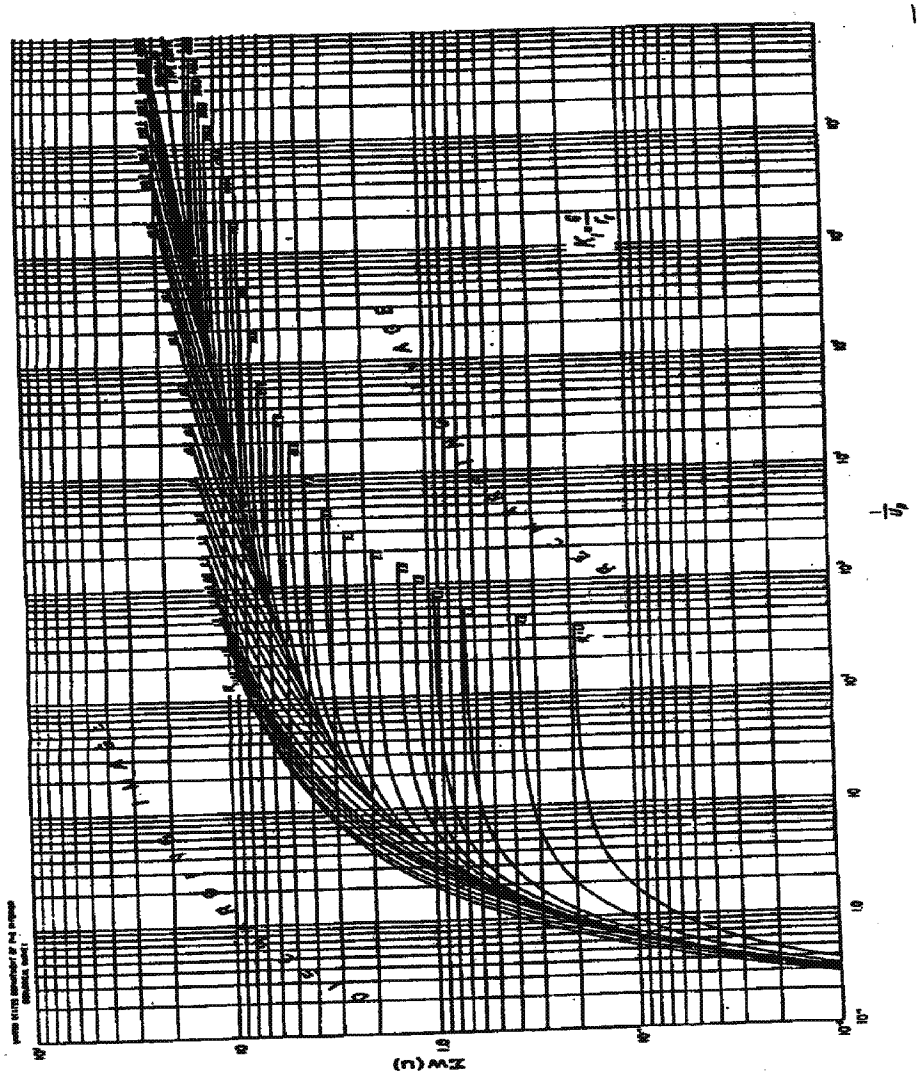

Figure SOP033-3. Family of type curves for the solution of the Modified Theis formula (after ASTM D-5270-92).

ED_004144A_00000101-00663

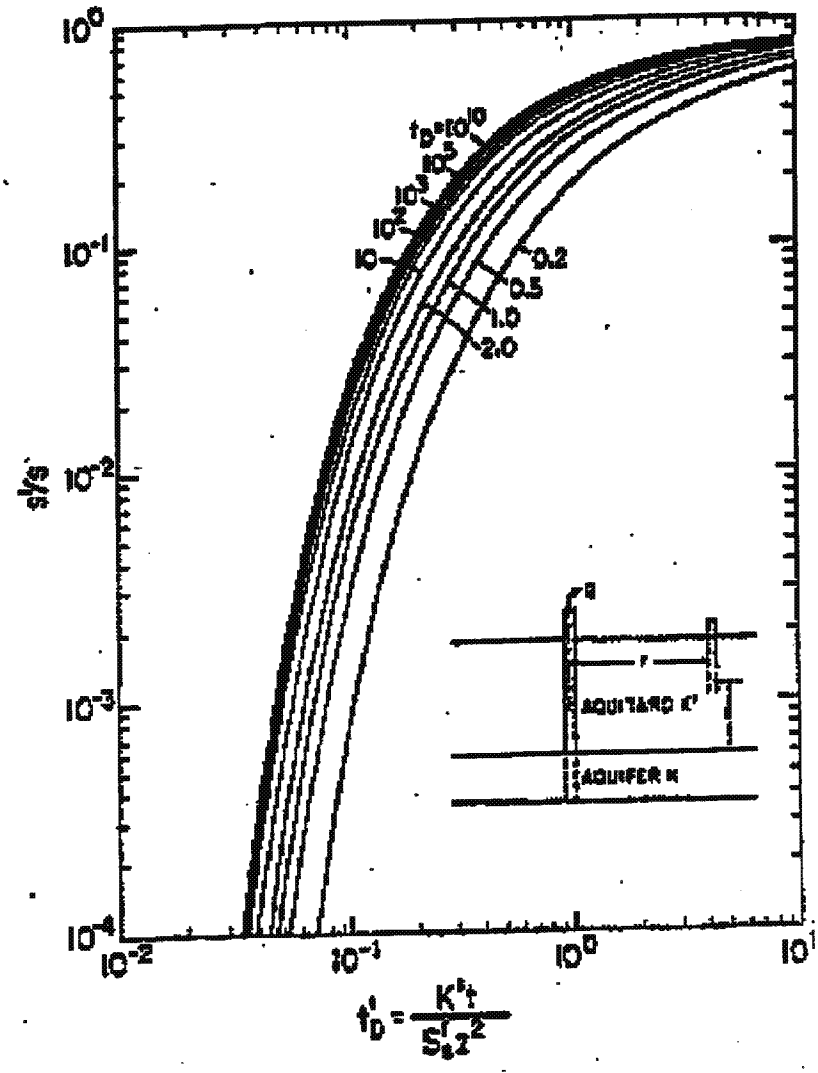

Figure SOP033-4. Variation of s'/s with t'd for a Semi-Infinite Aquitard (after Reynolds).

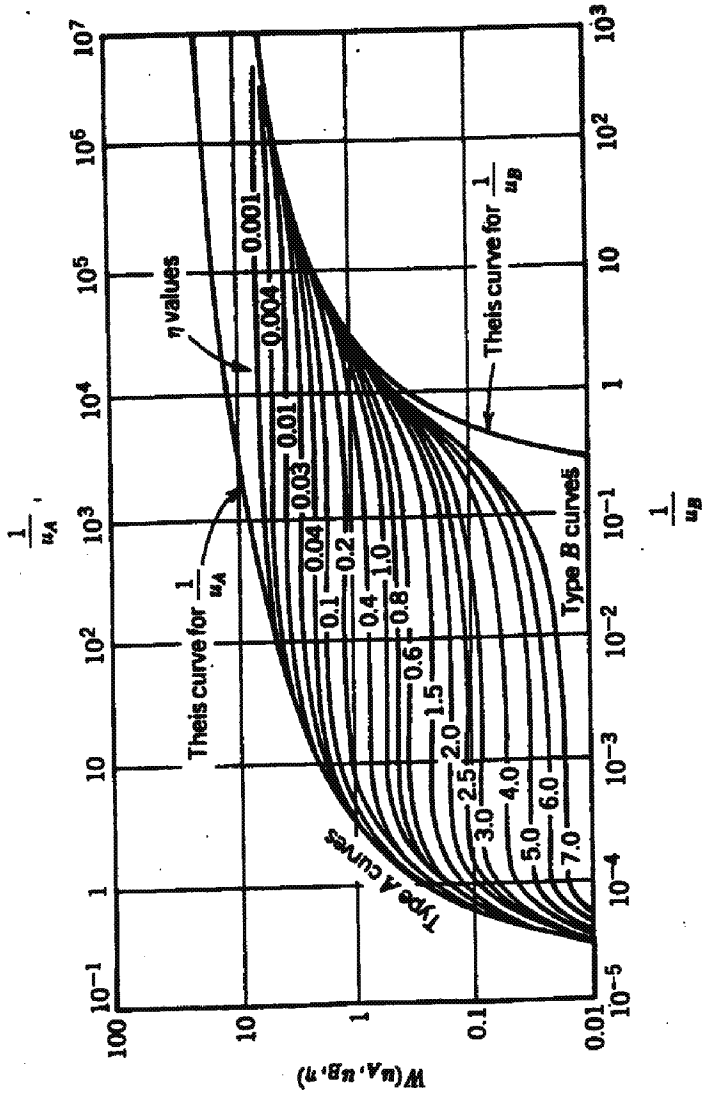

Figure SOP033-5. A and B type curves (after Dominico).

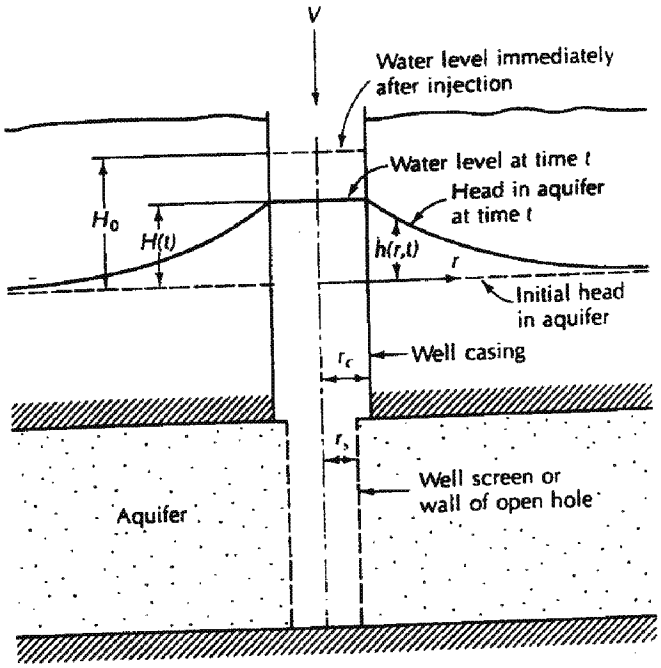

Figure SOP033-6. Well parameters – slug tests (after Fetter).

Fractured Aquifer	= Yes >	Fractured Aquifer Gringarten & Ramey Barenblatt *et al.* Boulton & Streltsova Moench
No V		
Single Aquifer	= No >	Multiple Aquifers Bennett & Patten Hantush Neuman & Witherspoon Javendel & Witherspoon
Yes V		
Isotropic Aquifer	= No >	Radial-Vertical Anisotropy Hantush Weeks Horizontal Anisotropy Papadopulous
Yes V		
Lateral Boundary	= Yes >	Bounded Aquifer Ferris *et al.* Stallman
Yes V		
Confined Aquifer	= No >	Unconfined Aquifer: Constant Discharge Boulton Neuman Slug Test Bouwer & Rice Bouwer
Yes V		
Leaky Aquifer	= No >	Confined Aquifer: Constant Discharge Theis Cooper & Jacob Jacob Thiem Variable Discharge Stallman Hantush Abu-Zeid & Scott Aron & Scott Lai *et al.* Moench Constant Drawdown Jacob & Lohman Hantush Rushton & Rathod Slug Test Hvorslev Cooper *et al.*
Yes		
Storage in Confining Bed	= No >	Without Storage Hantush & Jacob
Yes — >	========== >	With Storage Hantush Neuman & Witherspoon

Table SOP033-1. Decision tree for selection of aquifer test method (after ASTM D-4043-91).

ED_004144A_00000101-00667

This page intentionally left blank

Standard Operating Procedure No. 34
for
Drum Sampling

Prepared by

EA Engineering, Science, and Technology, Inc., PBC
225 Schilling Circle, Suite 400
Hunt Valley, Maryland 21031

Revision 0
December 2014

This page intentionally left blank

CONTENTS

Page

1. SCOPE AND APPLICATION 1

2. MATERIALS 2

3. PROCEDURE 2

3.1 Preparation 2
3.2 Drum Excavation 3
3.3 Drum Inspection 3
3.4 Drum Staging 4
3.5 Drum Opening 5

3.5.1 Manual Drum Opening with a Bung Wench 5
3.5.2 Manual Drum Opening with a Drum Deheader 5
3.5.3 Remote Drum Opening with Hydraulic Devices 6
3.5.4 Remote Drum Opening with Pneumatic Devices 6

3.6 Drum Sampling 6

3.6.1 Glass Thief Sampler 7
3.6.2 Composite Liquid Waste Sampler 8
3.6.3 Coring Device 9

3.7 Hazard Categorization 10

4. MAINTENANCE 11

5. PRECAUTIONS 11

6. REFERENCES 11

ATTACHMENT A: FIELD TEST DATA SHEETS
ATTACHMENT B: EQUIPMENT DIAGRAMS

ED_004144A_00000101-00671

This page intentionally left blank

ED_004144A_00000101-00672

1. SCOPE AND APPLICATION

The purpose of this Standard Operating Procedure is to provide technical guidance on implementing safe and cost-effective response actions at hazardous waste sites containing drums with unknown contents. Container contents are sampled and characterized for disposal, bulking, recycling, segregation, and classification purposes.

These are standard (i.e., typically applicable) operating procedures which may be varied or changed as required, dependent on site conditions, equipment limitations, or limitations imposed by the procedure. In all instances, the ultimate procedures employed should be documented and associated with the final report.

Prior to sampling, drums must be excavated (if necessary), inspected, staged, and opened. Drum excavation must be performed by qualified personnel. Inspection involves the observation and recording of visual qualities of each drum and any characteristics pertinent to classification of the drum's contents. Staging involves the physical grouping of drums according to classifications established during the physical inspection. Opening of closed drums can be performed manually or remotely. Remote drum opening is recommended for worker safety. The most widely used method of sampling a drum involves the use of a glass thief. This method is quick, simple, relatively inexpensive, and requires no decontamination. The contents of a drum can be further characterized by performing various field tests.

If buried drums are suspected, geophysical investigation techniques, i.e., magnetometry or ground penetrating radar, may be employed in an attempt to determine the location and depth of drums. During excavation, the soil must be removed with great caution to minimize the potential for drum rupture.

Until the contents are characterized, sampling personnel should assume that unlabelled drums contain hazardous materials. Labeled drums are frequently mislabeled, especially drums that are reused. Because a drum's label may not accurately describe its contents, extreme caution must be exercised when working with or around drums.

If a drum that contains a liquid cannot be moved without rupture, its contents may be immediately transferred to a sound drum using an appropriate method of transfer based on the type of waste. In any case, preparations should be made to contain the spill (i.e., spill pads, dike, etc.) should one occur.

If a drum is leaking, open, or deteriorated, it must be placed immediately in overpack containers.

The practice of tapping drums to determine their contents is neither safe nor effective and should not be used if the drums are visually overpressurized or if shock-sensitive materials are suspected. A laser thermometer may be effective in order to determine the level of the drum contents via surface temperature differences.

ED_004144A_00000101-00673

Drums that have been over-pressurized to the extent that the head is swollen several inches above the level of the chime should not be moved. A number of devices have been developed for venting critically swollen drums. One method that has proven to be effective is a tube and spear device. A light aluminum tube (3-m long) is positioned at the vapor space of the drum. A rigid, hooking device attached to the tube goes over the chime and holds the tube securely in place. The spear is inserted in the tube and positioned against the drum wall. A sharp blow on the end of the spear drives the sharpened tip through the drum and the gas vents along the grooves. Venting should be performed from behind a wall or barricade. Once the pressure has been relieved, the bung can be removed and the drum sampled.

Because there is potential for accidents to occur during handling, particularly initial handling, drums should only be handled if necessary. All personnel should be warned of the hazards prior to handling drums. Overpack drums and an adequate volume of absorbent material should be kept near areas where minor spills may occur. Where major spills may occur, a containment berm adequate to contain the entire volume of liquid in the drums should be constructed before any handling takes place. If drum contents spill, personnel trained in spill response should be used to isolate and contain the spill.

2. MATERIALS

The following materials may be required:

Absorbent material for spills	Glass thieving tubes or composite liquid waste sampler
Bung wrench	Hydraulic drum opener
Chain-of-custody records	Other appropriate sample jars
Coring device	Personal protective equipment
Decontamination materials	Pneumatic devices
Drum deheader, (if necessary)	Stainless steel spatula or spoons
Drum opening devices	Uniquely numbered sample identification labels with corresponding data sheets
Drum overpacks	Wide-mouth amber glass jars with Teflon® cap liner, approximately 500-mL volume
Drum/Tank Sampling Data Sheets and Field Test Data Sheets for Drum/Tank Sampling	

3. PROCEDURE

3.1 PREPARATION

1. Determine the extent of the sampling effort, the sampling methods to be employed, and the types and amounts of equipment and supplies needed.

2. Obtain necessary sampling and monitoring equipment.

3. Decontaminate or preclean equipment, and ensure that it is in working order.

ED_004144A_00000101-00674

4. Prepare scheduling and coordinate with staff, clients, and regulatory agency, if appropriate.

5. Perform a general site survey prior to site entry in accordance with the site-specific Health and Safety Plan.

6. Use stakes, flagging, or buoys to identify and mark all sampling locations. If required, the proposed locations may be adjusted based on site access, property boundaries, and surface obstructions.

3.2 DRUM EXCAVATION

If it is presumed that buried drums are onsite and prior to beginning excavation activities, geophysical investigation techniques should be utilized to approximate the location and depth of the drums. In addition, it is important to ensure that all locations where excavation will occur are clear of utility lines, pipes, and poles (subsurface as well as above surface).

Excavating, removing, and handling drums are generally accomplished with conventional heavy construction equipment. These activities should be performed by an equipment operator who has experience in drum excavation. During excavation activities, drums must be approached in a manner that will avoid digging directly into them.

The soil around the drum should be excavated with non-sparking hand tools or other appropriate means and, as the drums are exposed, a visual inspection should be made to determine the condition of the drums. Ambient air monitoring should be performed to determine the presence of unsafe levels of volatile organics, explosives, or radioactive materials. Based on this preliminary visual inspection, the appropriate mode of drum excavation and handling may be determined.

Drum identification and inventory should begin before excavation. Information such as location, date of removal, drum identification number, overpack status, and any other identification marks should be recorded on the Drum/Tank Sampling Data Sheet (Attachment A-1).

3.3 DRUM INSPECTION

Appropriate procedures for handling drums depend on the contents. Thus, prior to any handling, drums should be visually inspected to gain as much information as possible about their contents. The drums should be inspected for the following:

- Drum condition, corrosion, rust, punctures, bungs, and leaking contents

- Symbols, words, or other markings on the drum indicating hazards (i.e., explosive, radioactive, toxic, flammable), or further identifying the drums

ED_004144A_00000101-00675

- Signs that the drum is under pressure
- Shock sensitivity.

Monitoring should be conducted around the drums using instruments such as radiation meters, organic vapor analyzers, and combustible gas indicators.

Survey results can be used to classify the drums into categories, including the following:

- Radioactive
- Leaking/deteriorating
- Bulging
- Laboratory packs
- Explosive/shock sensitive
- Empty.

All personnel should assume that unmarked drums contain hazardous materials until their contents have been categorized. Once a drum has been visually inspected and any immediate hazard has been eliminated by overpacking or transferring the drum's contents, the drum is affixed with a numbered tag and transferred to a staging area. Color-coded tags, labels, or bands should be used to identify the drum's category based on visual inspection. A description of each drum, its condition, any unusual markings, the locations where it was buried or stored, and field monitoring information should be recorded on a Drum/Tank Sampling Data Sheet. These data sheets become the principle recordkeeping tools for tracking the drum onsite.

3.4 DRUM STAGING

Prior to sampling, the drums should be staged to allow easy access. Ideally, the staging area should be located just far enough from the drum opening area to prevent a chain reaction if one drum should explode or catch fire when opened.

During staging, the drums should be physically separated into the following categories: those containing liquids, those containing solids, those containing laboratory packs, and those that are empty. This separation is performed because the strategy for sampling and handling drums/containers in each of these categories will be different. This may be achieved by visual inspection of the drum and its labels, codes, etc. Solids and sludges are typically disposed of in open top drums. Closed head drums with a bung opening generally contain liquid.

Where there is good reason to suspect that drums contain radioactive, explosive, or shock-sensitive materials, these drums should be staged in a separate, isolated area. Placement of explosives and shock-sensitive materials in diked and fenced areas will minimize the hazard and adverse effects of any premature detonation of explosives.

Where space allows, the drum opening area should be physically separated from the drum removal and drum staging operations. Drums should be moved from the staging area to the

ED_004144A_00000101-00676

drum opening area one at a time using forklift trucks equipped with drum grabbers or a barrel grappler. In a large-scale drum handling operation, drums may be conveyed to the drum opening area using a roller conveyor. Drums may be restaged as necessary after opening and sampling.

3.5 DRUM OPENING

There are three basic techniques available for opening drums at hazardous waste sites:

1. Manual opening with non-sparking bung wrenches
2. Drum deheading
3. Remote drum puncturing or bung removal.

The choice of drum opening techniques and accessories depends on the number of drums to be opened, their waste contents, and physical condition. Remote drum opening equipment should always be considered in order to protect worker safety. Under Occupational Safety and Health Administration 1910.120, manual drum opening with bung wrenches or deheaders should be performed ONLY with structurally sound drums and waste contents that are known to be non-shock sensitive, non-reactive, non-explosive, and non-flammable.

3.5.1 Manual Drum Opening with a Bung Wrench

Manual drum opening with bung wrenches should not be performed unless the drums are structurally sound (no evidence of bulging or deformation) and their contents are known to be non-shock sensitive, non-reactive, non-explosive or non-flammable. If opening the drum with bung wrenches is deemed safe, then certain procedures should be implemented to minimize the hazard:

- Field personnel should be fully outfitted with protective gear.
- Drums should be positioned upright with the bung up, or, for drums with bungs on the side, laid on their sides with the bung plugs up.
- The wrenching motion should be a slow, steady pull across the drum. If the length of the bung wrench handle provides inadequate leverage for unscrewing the plug, a “cheater bar” can be attached to the handle to improve leverage.

3.5.2 Manual Drum Opening with a Drum Deheader

Drums are opened with a drum deheader (Attachment B, Figure 1) by first positioning the cutting edge just inside the top chime and then tightening the adjustment screw so that the deheader is held against the side of the drum. Moving the handle of the deheader up and down while sliding the deheader along the chime will enable the entire top to be rapidly cut off if so desired. If the top chime of a drum has been damaged or badly dented, it may not be possible to cut the entire top off. Since there is always the possibility that a drum may be under pressure,

ED_004144A_00000101-00677

the initial cut should be made very slowly to allow for the gradual release of any built-up pressure. A safer technique would be to employ a remote method prior to using the deheader. Self-propelled drum openers which are either electrically or pneumatically driven are available and can be used for quicker and more efficient deheading.

The drum deheader should be decontaminated, as necessary, after each drum is opened to avoid cross contamination and/or adverse chemical reactions from incompatible materials.

3.5.3 Remote Drum Opening with Hydraulic Devices

A piercing device with a non-sparking, metal point is attached to the end of a hydraulic line and is pushed into the drum by the hydraulic pressure. The piercing device can be attached so that a hole for sampling can be made in either the side or the head of the drum. Some of the metal piercers are hollow or tube-like so that they can be left in place if desired and serve as a permanent tap or sampling port. The piercer is designed to establish a tight seal after penetrating the container.

3.5.4 Remote Drum Opening with Pneumatic Devices

Pneumatically-operated devices utilizing compressed air have been designed to remove drum bungs remotely. Prior to opening the drum, a bung fitting must be selected to fit the bung to be removed. The adjustable bracketing system is then attached to the drum and the pneumatic drill is aligned over the bung. This must be done before the drill can be operated. The operator then moves away from the drum to operate the equipment. Once the bung has been loosened, the bracketing system must be removed before the drum can be sampled. This remote bung opener does not permit the slow venting of the container and, therefore, appropriate precautions must be taken. It also requires the container to be upright and relatively level. Bungs that are rusted shut cannot be removed with this device.

3.6 DRUM SAMPLING

After the drum has been opened, preliminary monitoring of headspace gases should be performed first with an explosimeter/oxygen meter. Afterwards, an organic vapor analyzer or other instrument(s) should be used. If possible, these instruments should be intrinsically safe. In most cases, it is impossible to observe the contents of these sealed or partially sealed drums. Since some layering or stratification is likely in any solution left undisturbed, a sample that represents the entire depth of the drum must be taken.

When sampling a previously sealed drum, a check should be made for the presence of a bottom sludge. This is easily accomplished by measuring the depth to apparent bottom and then comparing it to the known interior depth.

ED_004144A_00000101-00678

3.6.1 Glass Thief Sampler

The most widely used implement for sampling drum liquids is a glass tube commonly referred to as a glass thief (Attachment B, Figure 2). This tool is cost effective, quick, and disposable. Glass thieves are typically 6-16 mm inner diameter and 48-in. long.

Procedures for use:

1. Remove the cover from the sample container.
2. Insert the glass tubing almost to the bottom of the drum or until a solid layer is encountered. Approximately 1 ft of tubing should extend above the drum.
3. Allow the waste in the drum to reach its natural level in the tube.
4. Cap the top of the sampling tube with a tapered stopper or thumb, ensuring liquid does not come into contact with stopper.
5. Carefully remove the capped tube from the drum and insert the uncapped end into the appropriate sample container.
6. Release stopper and allow glass thief to drain until the container is approximately two-thirds full.
7. Remove tube from the sample container, break it into pieces, and place the pieces in the drum.
8. Cap the sample container lightly and label it. Place the sample container into a carrier.
9. Replace the bung or place plastic over the drum.
10. Log all samples in the site logbook and on Drum/Tank Sampling Data Sheets.
11. Perform hazard categorization analyses if included in the project scope.
12. Transport the sample to the decontamination zone and package it for transport to the analytical laboratory, as necessary. Complete chain-of-custody records.

In many instances, a drum containing waste material will have a sludge layer on the bottom. Slow insertion of the sample tube into this layer, then a gradual withdrawal will allow the sludge to act as a bottom plug to maintain the fluid in the tube. The plug can be gently removed and placed into the sample container by the use of a stainless steel laboratory spoon.

ED_004144A_00000101-00679

It should be noted that, in some instances, disposal of the tube by breaking it into the drum may interfere with eventual plans for the removal of its contents. The use of this technique should be cleared with the project officer or other glass thief disposal techniques should be evaluated.

3.6.2 Composite Liquid Waste Sampler

The Composite Liquid Waste Sampler (COLIWASA) and modifications thereof are equipment that collect a sample from the full depth of a drum and maintain it in the transfer tube until delivery to the sample bottle. The COLIWASA (Attachment B, Figure 3) is a frequently cited sampler designed to permit representative sampling of multiphase wastes from drums and other containerized wastes. One configuration consists of a 152-cm × 4-cm inner diameter section of tubing with a neoprene stopper at one end attached by a rod running the length of the tube to a locking mechanism at the other end.

Manipulation of the locking mechanism opens and closes the sampler by raising and lowering the neoprene stopper. One model of the COLIWASA is shown in Attachment B; however, the design can be modified and/or adapted somewhat to meet the needs of the sampler.

The major drawbacks associated with using a COLIWASA concern decontamination and costs. The sampler is difficult to decontaminate in the field, and its high cost in relation to alternative procedures (glass tubes) make it an impractical throwaway item. It still has applications, however, especially in instances where a true representation of a multiphase waste is absolutely necessary.

Procedures for use:

1. Put the sampler in the open position by placing the stopper rod handle in the T-position and pushing the rod down until the handles sits against the sampler's locking block.

2. Slowly lower the sampler into the liquid waste. Lower the sampler at a rate that permits the levels of the liquid inside and outside the sampler tube to be about the same. If the level of liquid in the sample tube is lower than that outside the sampler, the sampling rate is too fast and will result in a non-representative sample.

3. When the sampler stopper hits the bottom of the waste container, push the sampler tube downward against the stopper to close the sampler. Lock the sampler in the closed position by turning the T-handle until it is upright and one end rests tightly on the locking block.

4. Slowly withdraw the sample from the waste container with one hand while wiping the sampler tube with a disposable cloth or rag with the other hand.

5. Carefully discharge the sample into the appropriate sample container by slowly pulling the lower end of the T-handle away from the locking block while the lower end of the sampler is positioned in a sample container.

ED_004144A_00000101-00680

6. Cap the sample container tightly and label it. Place the sample container in a carrier.

ED_004144A_00000101-00681

7. Replace the bung or place plastic over the drum.

8. Log all samples in the site logbook and on Drum/Tank Sampling Data Sheets.

9. Perform hazardous categorization analyses if included in the project scope.

10. Transport the sample to the decontamination zone and package for transport to the analytical laboratory, as necessary. Complete the chain-of-custody records.

3.6.3 Coring Device

A coring device may be used to sample drum solids. Samples should be taken from different areas within the drum. This sampler consists of a series of extensions, a T-handle, and the coring device.

Procedures for use:

1. Assemble the sampling equipment.

2. Remove the cover from the sample container.

3. Insert the sampling device to the bottom of the drum. The extensions and the "T" handle should extend above the drum.

4. Rotate the sampling device to cut a core of material.

5. Slowly withdraw the sampling device so that as much sample material as possible is retained within it.

6. Transfer the sample to the appropriate sample container, and label it. A stainless steel spoon or scoop may be used as necessary.

7. Cap the sample container tightly and place it in a carrier.

8. Replace the bung or place plastic over the drum.

9. Log all samples in the site log book and on Drum/Tank Sampling Data Sheets.

10. Perform hazard categorization analyses if included in the project scope.

11. Transport the sample to the decontamination zone and package it for transport to the analytical laboratory, as necessary. Complete the chain-of-custody records.

ED_004144A_00000101-00682

3.7 HAZARD CATEGORIZATION

The goal of characterizing or categorizing the contents of drums is to obtain a quick, preliminary assessment of the types and levels of pollutants contained in the drums. These activities generally involve rapid, non-rigorous methods of analysis. The data obtained from these methods can be used to make decisions regarding drum staging or restaging, bulking, or compositing of the drum contents.

As a first step in obtaining these data, standard tests should be used to classify the drum contents into general categories such as auto-reactives, water reactives, inorganic acids, organic acids, heavy metals, pesticides, cyanides, inorganic oxidizers, and organic oxidizers. In some cases, further analyses should be conducted to more precisely identify the drum contents.

There are several methods available to perform these tests:

- HazCat^{R} chemical identification systems
- Chlor-N-Oil Test Kit
- Spill-fyter Chemical Classifier Strips
- Setaflash (for ignitability).

These methods must be performed according to the manufacturers' instructions and the results must be documented on the Field Test Data Sheet for Drum/Tank Sampling (Attachment A-2).

Other tests that may be performed include:

- Water Reactivity
- Specific Gravity Test (compared to water)
- Water Solubility Test
- pH of Aqueous Solution.

The tests must be performed in accordance with the instructions on the Field Test Data Sheet for Drum/Tank Sampling, and results of the tests must be documented on these data sheets.

The specific methods that will be used for hazard categorization must be documented in the Quality Assurance Work Plan.

ED_004144A_00000101-00683

4. MAINTENANCE

Not applicable.

5. PRECAUTIONS

When working with potentially hazardous materials, follow U.S. Environmental Protection Agency, Occupational Safety and Health Administration, and Corporate safety and health procedures.

More specifically, the opening of closed containers is one of the most hazardous site activities. Maximum efforts should be made to ensure the safety of the sampling team. Proper protective equipment and a general awareness of the possible dangers will minimize the risk inherent to sampling operations. Employing proper drum opening techniques and equipment will also safeguard personnel. The use of remote sampling equipment whenever feasible is highly recommended.

6. REFERENCES

Office of Solid Waste and Emergency Response Directive 9380.0-3. Guidance Document for Cleanup of Surface Tank and Drum Sites.

U.S. Environmental Protection Agency. Drum Handling Practices at Hazardous Waste Sites. EPA-600/2-86-013.

ED_004144A_00000101-00684

This page intentionally left blank

ED_004144A_00000101-00685

Attachment A

Field Test Data Sheets

ED_004144A_00000101-00686

This page intentionally left blank

ED_004144A_00000101-00687

Attachment A-1
Drum/Tank Sampling Data Sheets

Samplers: _____ Date: _____

Site Name: _____ Work Order Number: 3347-040-001- _____

Container Number/Sample Number: _____ REAC Task Leader: _____

SITE INFORMATION :

1. Terrain, drainage description:_____

2. Weather conditions (from observation):_____

MET station on site: No Yes

CONTAINER INFORMATION :

1. Container type: Drum Tank Other:_____

2. Container dimensions: Shape:_____

Approximate size:_____

3. Label present: No
Yes:_____

Other Markings: _____

4. Spill or leak present: No Yes Dimensions:_____

5. Container location: (Circle one) N/A See Map Other: _____

ED_004144A_00000101-00688

Attachment A-1
Drum/Tank Sampling Data Sheets
(continued)

SAMPLE INFORMATION :

1. Description: _____ liquid _____ solid (_____ powder or _____ crystals) _____ sludge

2. Color: _____ Vapors:_____
   Other:_____

3. Local effects present: (damage - environmental, material)_____

FIELD MONITORING :

1. PID: _____ Background (clean zone)

   _____ Probe used/Model used

   _____ Reading from container opening

2. FID: _____ Background (clean zone)

   _____ Reading from container opening

3. Radiation Meter:

   _____ Model used

   _____ Background (clean zone)

   _____ Reading from container opening

4. Explosimeter/Oxygen Meter:

   _____ Oxygen level from container opening

   _____ LEL level from container opening

ED_004144A_00000101-00689

Attachment A-2
Field Test Data Sheets for
Drum/Tank Sampling

Samplers: _____ Date: _____

Site Name: _____ Work Order Number: 3347-040-001-_____

Container Number/Sample Number: _____ REAC Task Leader: _____

SAMPLE MONITORING INFORMATION :

1. PID: _____ Background (clean zone)

_____ Probe used/Model used

_____ Reading from sample

2. FID: _____ Background (clean zone)

_____ Reading from sample

3. Radiation Meter: _____ Model used

_____ Background (clean zone)

_____ Reading from sample

4. Explosimeter/Oxygen Meter: _____ Oxygen level (sample)

_____ LEL level (sample)

SAMPLE DESCRIPTION :

_____ Liquid _____ Solid _____ Sludge _____ Color _____ Vapors

WATER REACTIVITY :

1. Add small amount of sample to water: _____ bubbles _____ color change to _____

_____ vapor formation _____ heat _____ No Change

SPECIFIC GRAVITY TEST (compared to water):

1. Add small amount of sample to water: _____ sinks _____ floats

2. If liquid sample sinks, screen for chlorinated compounds. If liquid sample floats and appears to be oily, screen for PCBs (Chlor-N-Oil kit).

ED_004144A_00000101-00690

Attachment A-2
Field Test Data Sheets for
Drum/Tank Sampling
(continued)

CHLOR N OIL TEST KIT INFORMATION :

1. Test kit used for this sample: Yes No

2. Results: _____ PCB not present _____ PCB present, less than 50 ppm

_____ PCB present, greater than 50 ppm _____ 100% PCB present

WATER SOLUBILITY TEST :

1. Add approximately one part sample to five parts water. You may need to stir and heat gently. **[DO NOT HEAT IF WATER REACTIVE!]** Results: _____ total _____ partial _____ no solubility

pH OF AQUEOUS SOLUTION :

1. Using 0-14 pH paper, check pH of water/sample solution: _____.

SPILL-FYTER CHEMICAL CLASSIFIER STRIPS :

1. Acid/Base Risk: (Circle one)	Color Change
Strong acid (0)	RED
Moderately acidic (1-3)	ORANGE
Weak acid (5)	YELLOW
Neutral (7)	GREEN
Moderately basic (9-11)	Dark GREEN
Strong Base (13-14)	Dark BLUE
2. Oxidizer Risk: (Circle one)	
Not Present	WHITE
Present	BLUE, RED, OR ANY DIVERGENCE FROM WHITE
3. Fluoride Risk: (Circle one)	
Not Present	PINK
Present	YELLOW

ED_004144A_00000101-00691

4. Petroleum Product, Organic Solvent Risk: (Circle one)

Not Present	LIGHT BLUE
Present	DARK BLUE

5. Iodine, Bromine, Chlorine Risk: (Circle one)

Not Present	PEACH
Present	WHITE OR YELLOW

SETAFLASH IGNITABILITY TEST :

140°F	Ignitable: _____	Non-Ignitable _____
160°F	Ignitable: _____	Non-Ignitable _____
_____	Ignitable: _____	Non-Ignitable _____
_____	Ignitable: _____	Non-Ignitable _____
_____	Ignitable: _____	Non-Ignitable _____
_____	Ignitable: _____	Non-Ignitable _____

Comments:

_____
_____
_____
_____
_____
_____

HAZCAT KIT TESTS :

1. Test: _____ Outcome: _____

Comments: _____

_____

2. Test: _____ Outcome: _____

Comments: _____

_____

ED_004144A_00000101-00692

Attachment A-2
Field Test Data Sheets for
Drum/Tank Sampling
(continued)

3. Test: _____ Outcome: _____

Comments: _____

_____

4. Test: _____ Outcome: _____

Comments: _____

_____

5. Test: _____ Outcome: _____

Comments: _____

_____

HAZCAT PESTICIDES KIT :

Present: _____ Not Present: _____

Comments: _____

_____

_____

ED_004144A_00000101-00693

Attachment B

Equipment Diagrams

ED_004144A_00000101-00694

This page intentionally left blank

ED_004144A_00000101-00695

Figure B-1. Drum deheader.

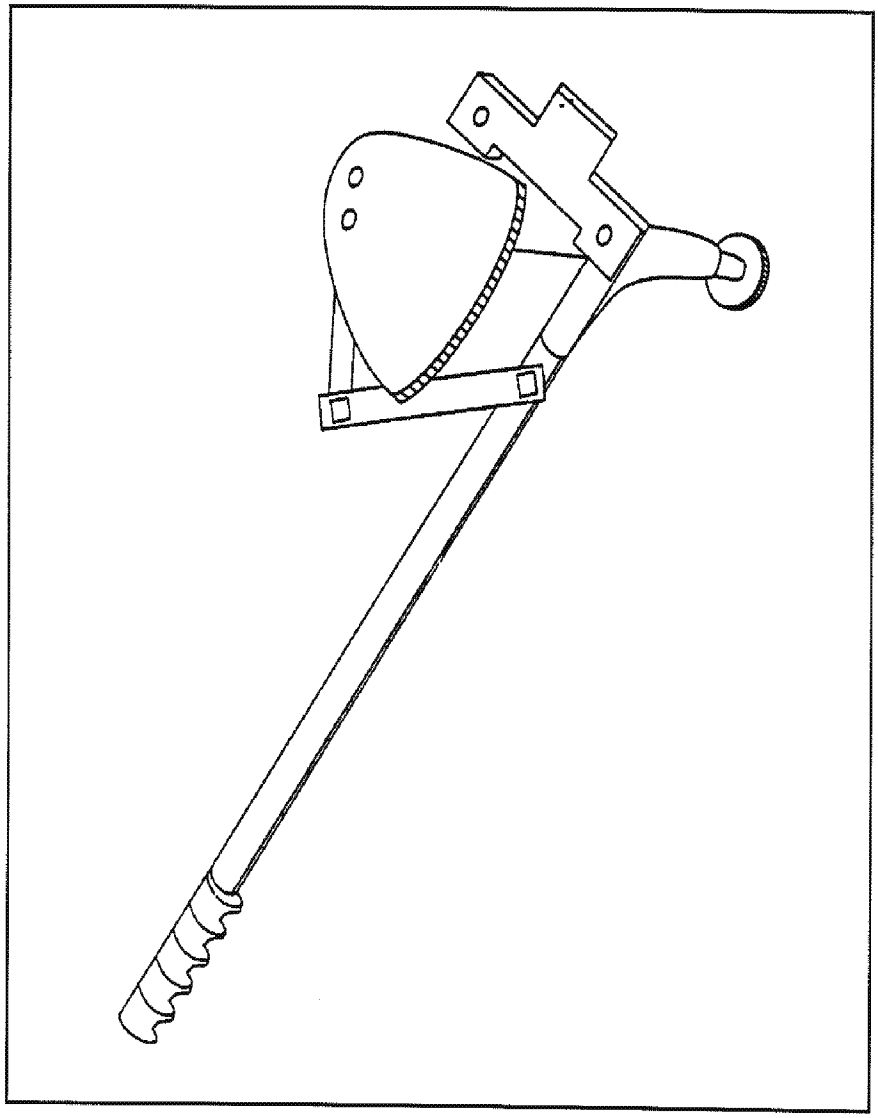

ED_004144A_00000101-00696

Figure B-2. Glass thief.

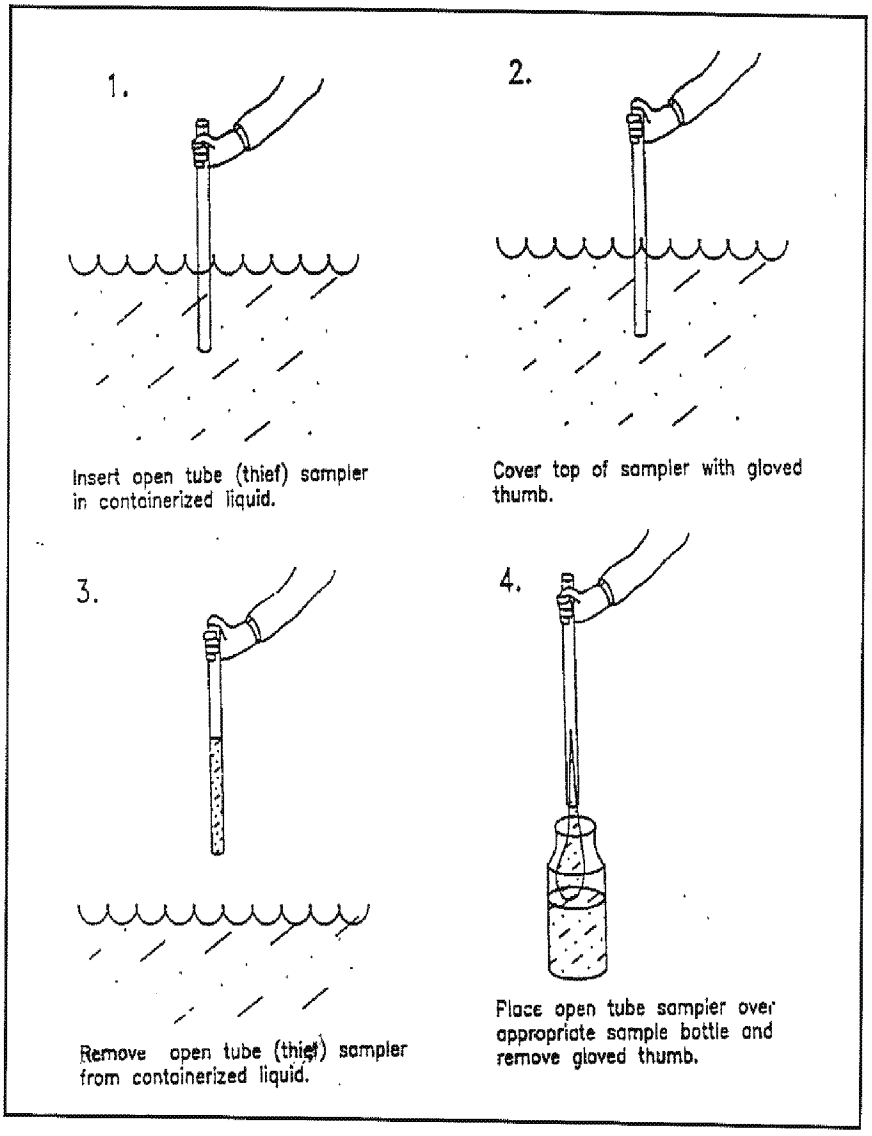

ED_004144A_00000101-00697

Figure B-3. COLIWASA.

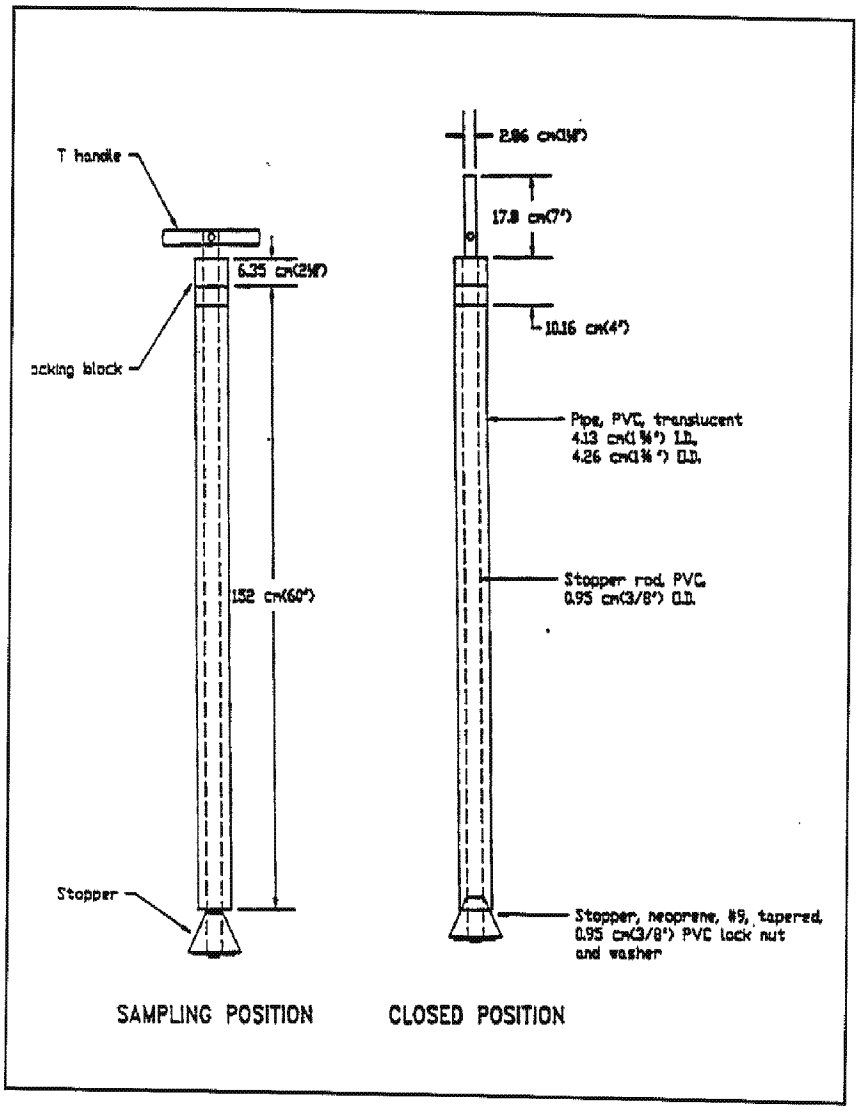

This page intentionally left blank

ED_004144A_00000101-00699

Standard Operating Procedure No. 036
for
Turbidity Measurements (DRT 100)

Prepared by

EA Engineering, Science, and Technology, Inc., PBC
225 Schilling Circle, Suite 400
Hunt Valley, Maryland 21031

Revision 0
December 2014

This page intentionally left blank

CONTENTS

Page

1. SCOPE AND APPLICATION 1

2. MATERIALS 1

3. PROCEDURE 1

4. MAINTENANCE 3

5. PRECAUTIONS 3

6. REFERENCES 3

ED_004144A_00000101-00702

This page intentionally left blank

ED_004144A_00000101-00703

1. SCOPE AND APPLICATION

The purpose of this Standard Operating Procedure (SOP) is to delineate protocols for measuring the turbidity of all types of aqueous solutions, including drinking water, saline water, and industrial and domestic wastes. Turbidity is an indication of the optical properties that cause light to be scattered or absorbed through an aqueous sample. Turbidity is largely a function of the refractive index and the size and shape of the particles suspended or dissolved in the solution. Turbidity meters do not produce an "absolute" measurement, but one that is "relative" to the optical nature of the solids in solution.

Use of brand names in this SOP is not intended as endorsement or mandate that a given brand be used. Alternate equivalent brands of detectors, sensors, meters, etc. are acceptable. If alternate equipment is to be used, the contractor will provide applicable and comparable SOPs for the maintenance and calibration of same.

2. MATERIALS

The following materials may be required:

Turbidity meter (DRT 100 or equivalent)
Lint free laboratory wipes (Kimwipes or equivalent)
Formazin standards (from manufacturer)
Sample bottle
Cuvettes

3. PROCEDURE

Calibration of the turbidity meter will be checked on a daily basis as follows:

- Set the range switch to 1000 range before turning the turbidity meter on and whenever the light shield is not in place over the sample well.
- Allow the turbidity meter 15-60 minutes to warmup.
- Clean the reference standard with kimwipes.
- Place the formazin suspension or reference standard in the turbidity meter sample well.
- Place the light shield over the reference standard.
- Rotate the front panel range switch counterclockwise to the appropriate nephelometric turbidity unit range.

ED_004144A_00000101-00704

- Adjust the reference adjust knob counterclockwise to read the same value as the reference standard value. This value is stamped on top of the reference standard.
- The turbidity meter is now standardized on all ranges to the factory formazin calibration and unknown samples may be read directly in nephelometric turbidity unit, feeder terminal unit, or Jackson turbidity unit.
- Rotate the range switch clockwise to the 1000 range before removing the reference standard.
- Record reading in field logbook (Refer to SOP Nos. 003 and 016).
- Do not leave the reference standard in the sample well for long periods.

Turbidity will be measured as follows:

- Pour aqueous sample into a new cuvette assuring no air bubbles.
- Place the cuvette into the sample well.
- Place the light shield over the sample.
- Rotate the range switch counterclockwise to the range which provides best readability and sensitivity for the sample being measured.
- Allow the turbidity meter to stabilize before recording the nephelometric turbidity unit value.
- Turn the range switch clockwise to the 1000 range and then remove the sample.
- Do not leave the filled cuvette in the sample well for long periods.
- Repeat above steps for additional samples.

Cuvette cleaning procedure is as follows:

- Cuvette must be clean and free of rubs or scratches.
- Wash the cuvette in a detergent solution.
- Rinse thoroughly 8-10 times, preferably with distilled water to remove all streaks.
- Polish with kimwipes.
- Cuvettes must be stored in a clean dust-free environment.

ED_004144A_00000101-00705

4. MAINTENANCE

Source lamp may be replaced as follows:

- Remove the instrument case per manufacturer instruction.
- Remove the bulb by loosening a screw and removing the electrical leads.
- Insert the new bulb and reconnect the electrical leads.
- Before tightening the screw, be sure to position the filament so that it will be parallel to the axis of the sample well.
- Insert the lamp alignment tool in the sample well to focus the new bulb.
- Move the lamp bracket assembly in or out until a focused image of the filament is within the rectangular box on the lamp alignment tool.
- Once the filament image has been aligned and focused within the rectangular box on the lamp adjustment tool, tighten all screws snugly.
- Replace the instrument case.

5. PRECAUTIONS

Handle the reference standard or sample cuvettes by the top to prevent surface scratches or finger smudges which will cause analysis errors.

Check the mechanical meter zero when the instrument is in a vertical position and the power switch is off. Adjust to zero only if necessary by means of the black screw on the meter face.

The turbidity meter should be left on for the entire work shift to minimize warm-up and recalibration delays.

Do not leave the reference standard or filled curvette in the sample well for long periods.

Leave the light shield in place on the instrument when it is not in use in order to protect the sample well for long periods.

Always set the range switch to 1000 range before turning the instrument on and whenever the light shield is not in place over the well.

6. REFERENCES

Manufacturer's Manual.

ED_004144A_00000101-00706

This page intentionally left blank

ED_004144A_00000101-00707

Standard Operating Procedure No. 037
for
Dissolved Oxygen Measurements
(YSI Model 57)

Prepared by

EA Engineering, Science, and Technology, Inc., PBC
225 Schilling Circle, Suite 400
Hunt Valley, Maryland 21031

Revision 0
December 2014

This page intentionally left blank

CONTENTS

Page

1. SCOPE AND APPLICATION 1

2. MATERIALS 1

3. PROCEDURE 1

   3.1 Setup 1
   3.2 Calibration 2
   3.3 Dissolved Oxygen Measurement 2

4. MAINTENANCE 3

5. PRECAUTIONS 3

6. REFERENCES 3

ED_004144A_00000101-00710

This page intentionally left blank

ED_004144A_00000101-00711

1. SCOPE AND APPLICATION

The purpose of this Standard Operating Procedure (SOP) is to delineate protocols for measuring the dissolved oxygen (DO) of all types of aqueous solutions, including drinking water, saline water, and industrial and domestic wastes. DO is a measurement of the amount of soluble oxygen in an aqueous solution. It is a general indication of an aerobic/anaerobic condition of a water sample.

Use of brand names in this SOP is not intended as endorsement or mandate that a given brand be used. Alternate equivalent brands of detectors, sensors, meters, etc. are acceptable. If alternate equipment is to be used, the contractor will provide applicable and comparable SOPs for the maintenance and calibration of same.

2. MATERIALS

The following materials may be required:

DO meter (YSI Model 57 or equivalent)
Self-stirring biological oxygen demand bottle probe
Membrane standards
Biological oxygen demand bottle

3. PROCEDURE

3.1 SETUP

It is important that before the meter is prepared for use and calibrated, it should be placed in the intended operating position, i.e., vertical, tilted, or horizontal. The instrument may need readjustment if the operating position is altered. The setup procedures should be as follows:

- With the switch set to **OFF**, adjust the meter pointer to zero with the screw in the center of the meter panel.
- Switch to **RED LINE** and adjust the **RED LINE** knob until the meter needle aligns with the red mark if necessary.
- Switch to **ZERO** and adjust to 0 mg/L scale with the **ZERO** control knob.
- Attach the prepared probe to the **PROBE** connector of the instrument and adjust the retaining ring finger tight.
- Before calibrating, allow 15 minutes for optimum probe stabilization. Repolarize whenever the instrument has been **OFF** or the probe has been disconnected.

ED_004144A_00000101-00712

3.2 CALIBRATION

Calibration is accomplished by exposing the probe to a known oxygen concentration, such as water-saturated air (%), or water of a known oxygen content (mg/L), and then adjusting the calibration controls so the display shows a reading matching the oxygen concentration of the known sample. Calibration can be disturbed by physical shock, touching the membrane, and fouling of the membrane or drying out of the electrolyte. Calibration will be checked after each series of measurements. Calibration of the DO meter will be performed on a daily basis as follows:

1. Place the probe in moist air. Biological oxygen demand probes can be placed in partially filled (50 ml) biological oxygen demand bottles. Wait 10 minutes for temperature to stabilize ± 2°C.

2. Switch to **TEMPERATURE** and read. Refer to Table SOP037-1 for solubility of oxygen in fresh water (calibration value).

3. Determine altitude or atmospheric correction factor from Table SOP037-2.

4. Multiply the calibration value from Table SOP037-1 by the correction factor from Table SOP037-2 to obtain the correct calibration value.

   EXAMPLE: Assume a temperature of 20°C and an altitude of 1,100 ft. From Table SOP037-1, the calibration value of 20°C is 9.09 mg/L. From Table SOP037-2, the correction factor for 1,100 ft is 0.96. Therefore, the corrected calibration value is 9.09 mg/L × 0.96 = 8.73 mg/L.

5. Switch to the appropriate mg/L range, set the **SALINITY** knob to zero and adjust the **CALIBRATE** knob until the meter reads the calibration value from Step 4. Wait 2 minutes to verify calibration stability. Readjust if necessary.

3.3 DISSOLVED OXYGEN MEASUREMENT

- With the instrument prepared for use and the probe calibrated, place the probe in the sample.

- Turn the **STIRRER** knob **ON**.

- Adjust the **SALINITY** knob to the salinity of the sample if appropriate.

- Allow sufficient time for the probe to equilibrate to the sample temperature and DO.

- Read DO on appropriate scale.

ED_004144A_00000101-00713

- Before measuring the DO of the next sample, rinse probe and sample bottle with distilled water and then with next water sample.

Follow steps above for the next sample(s).

The DO meter should normally be left on during the working day to avoid the delay of waiting for probe repolarization.

4. MAINTENANCE

The following steps will be taken to maintain the DO meter:

- Replace the batteries when the **RED LINE** knob is at its extreme adjustment or at least annually.
- In the **BATT CHECK** position on the **STIRRER** knob, the voltage of the stirrer batteries is displayed on the red **0-10** scale. Do not permit them to discharge below 6 volts.
- Replace membrane every 2 weeks depending on application. Probes will be stored in a humid environment to prevent drying out.

5. PRECAUTIONS

The DO meter case is water resistant when properly closed. As a precaution against damaged gaskets or loose fittings, the instrument case will be opened and inspected for moisture whenever the instrument has been subjected to immersion or heavy spray. The case is opened by removing the screws on the rear cover an lifting the cover off.

6. REFERENCES

Manufacturer's handbook.

ED_004144A_00000101-00714

This page intentionally left blank

ED_004144A_00000101-00715

TABLE SOP037-1 SOLUBILITY OF OXYGEN IN WATER EXPOSED TO WATER SATURATED AIR AT 760 mm Hg PRESSURE

Temperature (°C)	Solubility (mg/L)	Temperature (°C)	Solubility (mg/L)	Temperature (°C)	Solubility (mg/L)
0	14.62	17	9.67	34	7.07
1	14.22	18	9.47	35	7.95
2	13.83	19	9.28	36	7.84
3	13.46	20	9.09	37	6.73
4	13.11	21	8.92	38	6.62
5	12.77	22	8.74	39	6.52
6	12.45	23	8.58	40	6.41
7	12.14	24	8.42	41	6.31
8	11.84	25	8.26	42	6.21
9	11.56	26	8.11	43	6.12
10	11.29	27	7.97	44	6.02
11	11.03	28	7.83	45	5.95
12	10.78	29	7.69	46	5.84
13	10.54	30	7.56	47	5.74
14	10.31	31	7.43	48	5.65
15	10.08	32	7.31	49	5.56
16	9.87	33	7.18	50	5.47

NOTE: Derived from 17th Edition, Standard Methods for the Examination of Water and Wastewater.
°C = Degree Celsius.
mg/L = Milligram per liter.

ED_004144A_00000101-00716

TABLE SOP037-2 CALIBRATION VALUES FOR VARIOUS ATMOSPHERIC PRESSURES AND ALTITUDES

Pressure			Altitude		Calibration Value (Percent)
Inches Mercury	Millimeter Mercury	Kilopascal	Feet	Meter	
30.23	768	102.3	-276	-84	101
29.92	760	101.3	0	0	100
29.61	752	100.3	278	85	99
29.33	745	99.3	558	170	98
29.02	737	98.3	841	256	97
28.74	730	97.3	1126	343	96
28.43	722	96.3	1413	431	95
28.11	714	95.3	1703	519	94
27.83	707	94.2	1995	608	93
27.52	699	93.2	2290	698	92
27.24	692	92.2	2587	789	91
26.93	684	91.2	2887	880	90
26.61	676	90.2	3190	972	89
26.34	669	89.2	3496	1066	88
26.02	661	88.2	3804	1160	87
25.75	654	87.1	4115	1254	86
25.43	646	86.1	4430	1350	85
25.12	638	85.1	4747	1447	84
24.84	631	84.1	5067	1544	83
24.53	623	83.1	5391	1643	82
24.25	616	82.1	5717	1743	81
23.94	608	81.1	6047	1843	80
23.62	600	80.0	6381	1945	79
23.35	593	79.0	6717	2047	78
23.03	585	78.0	7058	2151	77
22.76	578	77.0	7401	2256	76
22.44	570	76.0	7749	2362	75
22.13	562	75.0	8100	2469	74
21.85	555	74.0	8455	2577	73
21.54	547	73.0	8815	2687	72
21.26	540	71.9	9178	2797	71
20.94	532	70.9	9545	2909	70
20.63	524	69.9	9917	3023	69
20.35	517	68.9	10293	3137	68
20.04	509	67.9	10673	3253	67
19.76	502	66.9	11058	3371	66

NOTE: Derived from 17th Edition, Standard Methods for the Examination of Water and Wastewater.

ED_004144A_00000101-00717

Standard Operating Procedure No. 038
for
Redox Potential Measurements

Prepared by

EA Engineering, Science, and Technology, Inc., PBC
225 Schilling Circle, Suite 400
Hunt Valley, Maryland 21031

Revision 0
December 2014

This page intentionally left blank

CONTENTS

Page

1. SCOPE AND APPLICATION 1
2. MATERIALS 1
3. PROCEDURE 1
4. MAINTENANCE 2
5. PRECAUTIONS 2
6. REFERENCES 2

ED_004144A_00000101-00720

This page intentionally left blank

ED_004144A_00000101-00721

1. SCOPE AND APPLICATION

The purpose of this Standard Operating Procedure is to delineate protocols for measuring the redox of flooded sediment and soil. Redox is an indication of the reduction of oxidation intensity of an anaerobic system. Redox will be expressed in mV. A complete anaerobic system redox potential is -150 Mv. A positive value indicates an aerobic system.

Redox measurement in a natural system is difficult to obtain due to the absence of true equilibria, heterogeneity of media, and pH effects deprived redox measurements in natural media of precise thermodynamic significance (Ponnamperuma 1972). Despite the difficulties involved in the redox measurements in natural media, it is widely accepted that redox readings in natural anaerobic systems can provide valuable environmental information. Whitfield found redox useful as a semi-quantitative indicator of the degree of stagnation of a particular aquatic environment as did Ponnamperuma for flooded soils and sediments. The redox measurements of natural waters are not representative of that median, since natural waters are in a highly dynamic state rather than in or near equilibrium, according to Stumm and Morgan 1970. It is generally recognized that redox measurements in oxygenated natural waters are invalid.

2. MATERIALS

The following materials may be required:

pH meter	Sample bottle
Combination pH electrode	Standard solution (pH 4 and 7 buffers saturated with quinhydrone)
Lint-free laboratory wipes (Kimwipes, or equivalent)	Wash bottle
Distilled water	

3. PROCEDURE

Calibration of the pH meter will be calibrated on a daily basis as follows.

- Prepare beaker of standard solution with known voltage(s)
- Connect electrodes to instrument
- Turn on and clear
- Rinse electrode with distilled water blot excess with laboratory wipes
- Immerse probe in beaker of standard solution
- Press mV key
- After the reading stabilizes, the absolute mV of solution is displayed.
- Rinse electrode and blot excess.

ED_004144A_00000101-00722

Redox will be measured after calibration as follows:

- Prepare sample in a beaker
- Rinse electrode and blot excess water
- Immerse electrode in sample and stir briefly
- Press mV switch
- Record the reading after it stabilizes
- For next sample(s), follow above steps.

4. MAINTENANCE

Check the batteries each time the meter is used.

Keep the probe stored in a 0.1 M KCL solution when not in use. Alternatively, the electrode may be rinsed with deionized water and trapping any residual water inside the protective cap.

5. PRECAUTION

Remove coatings of oil material or particulate matter that can impair electrode response by gentle wiping or detergent washing, followed by distilled water rinsing.

6. REFERENCES

Beckman Instruments, Inc. User Manual for 10, 11, and 12 pH/ISE meter.

Ponnamperuma, F.N. 1972. The Chemistry of Submerged Soils, Advances in Agronomy. Vol. 24.

Stumm, W. and J.J. Morgan. 1970. Aquatic Chemistry, Wiley, New York.

Whitfield, M. 1969. Eh as an Operational Parameter in Estuarine Studies. *Limnol. Oceanogr.*, Vol. 14.

ED_004144A_00000101-00723

Standard Operating Procedure No. 039
for
Sample Preservation and Container Requirements

Prepared by

EA Engineering, Science, and Technology, Inc., PBC
225 Schilling Circle, Suite 400
Hunt Valley, Maryland 21031

Revision 1
December 2014

This page intentionally left blank

CONTENTS

Page

1. PURPOSE AND SCOPE 1
2. MATERIALS 1
3. DEFINITION OF CONTAINER TYPES 1
4. PROCEDURE 2
5. MAINTENANCE 3
6. PRECAUTIONS 3
7. REFERENCES 3

ED_004144A_00000101-00726

This page intentionally left blank

ED_004144A_00000101-00727

1. PURPOSE AND SCOPE

The purpose of this Standard Operating Procedure (SOP) is to define the preservatives and techniques to be employed in preserving environmental samples between collection and analysis.

2. MATERIALS

The following materials may be required:

Containers (see Section 3 for description)	NaOH
HNO_3	Ice chests
H_2SO_4	Ice

3. DEFINITION OF CONTAINER TYPES

Listed below are the definitions of various container types.

Type	Container	Closure	Septum
A	80-ounce (oz) amber glass, ring handle bottle/jug, 38-millimeter (mm) neck finish	White polypropylene or black phenolic, baked polyethylene cap, 38-430 size, 0.015-mm polytetrafluoroethelyne (PTFE) liner	
B	40-mililiter (mL) glass vial, 24-mm neck finish	White polypropylene or black phenolic, open top, screw cap, 15-mm opening, 24-400 size	24-mm disc of 0.005-inch (in.) PTFE bonded to 0.120-in. silicon for total thickness of 0.125 in.
C	1-L high density polyethylene, cylinder-round bottle, 28-mm neck finish	White polyethylene cap, white ribbed, 28-410 size; F217 polyethylene liner	
D	120-mL wide mouth glass vial, 48-mm neck finish	White polyethylene cap, 40-480 size; 0.015-mm PTFE liner	
E	250-mL Boston round glass bottle	White polypropylene or black phenolic, open top, screw cap	Disc of 0.005-in. PTFE bonded to 0.120-in. silicon for total thickness of 0.125 in.
F	8-oz short, wide mouth, straight-sided, flint glass jar, 70-mm neck finish	White polypropylene or black phenolic, baked polyethylene cap, 48-400 size; 0.030-mm PTFE liner	
G	4-oz tall, wide mouth, straight - sided, flint glass jar, 48-mm neck finish	White polypropylene or black phenolic, baked polyethylene cap, 48-400 size; 0.015-mm PTFE liner	

ED_004144A_00000101-00728

Type	Container	Closure	Septum
H	1-L amber, Boston round, glass bottle, 33-mm pour-out neck finish	White polypropylene or black phenolic, baked polyethylene cap, 33-430 size; 0.015-mm PTFE liner	
K	4-L amber glass ring handle bottle/jug, 38-mm neck finish.	White polypropylene or black phenolic, baked polyethylene cap, 38-430 size; 0.015-mm PTFE liner	
L	500-mL high-density polyethylene, cylinder bottle, 28-mm neck finish	White polypropylene, white ribbed, 28-410 size; F217 polyethylene liner	

4. PROCEDURE

All containers described in Section 3 must be certified clean, with copies of laboratory certification furnished upon request. There may be circumstances when alternative containers will be used (e.g., aluminum foil around tissue samples placed in plastic bags, plastic buckets for large soil/sediment samples, etc.) for which laboratory certification may not be available. Such containering should be appropriately decontaminated or verified appropriately clean prior to using.

Water samples will be collected into pre-preserved containers appropriate to the intended analyte as given in Quality Assurance Project Plan. Samples taken for volatile organic compounds will be collected in accordance with SOP No. 003, Section 3.3.8. Samples taken for metals analysis will be verified in the field to a pH <2. The container should be tightly capped, then swirled to thoroughly mix the sample. The cap will then be loosened to release any excess pressure this operation may have generated. Samples taken for total phosphorous content will be verified in the field to a pH <2. The container should be tightly capped and swirled to thoroughly mix the sample. The cap will then be loosened to release any excess pressure this operation may have generated. Samples taken for cyanide will be verified for a pH >12. Most other samples do not require added preservation; however, there are analytes that may require special preservation, i.e., sulfide which requires a zinc acetate preservation. Preservation must be performed as documented in the project-specific Quality Assurance Project Plan. These samples will be immediately placed on ice and cooled to 4±2°C.

Soil and sediment samples will be collected into containers appropriate to the intended analyte as given in the Quality Assurance Project Plan. Samples taken for volatile organic compound analysis will collected in accordance with the site-specific SOP. Samples taken for metals analysis will be tightly capped, placed on ice, and maintained at a temperature of 4°C. Samples taken for total phosphorous content will be tightly capped, placed on ice, and maintained at a temperature of 4°C. Under most circumstances, no preservatives will be added to any other soil samples; follow project-specific requirements as documented in the Quality Assurance Project Plan. These samples will be immediately placed on ice and cooled to 4±2°C.

ED_004144A_00000101-00729

5. MAINTENANCE

Not applicable.

6. PRECAUTIONS

Note that acidifying a sample containing cyanide may liberate HCN gas.

- Avoid breathing any fumes emanating from acidified samples.
- Acidify samples only in the open, rather than in closed spaces, i.e., a vehicle.
- Hold suspected HCN-generating sample away from body and downwind while manipulating it.
- See the Health and Safety Plan for other safety measures.

7. REFERENCES

U.S. Environmental Protection Agency (EPA). 1986. Test Methods for Evaluating Solid Waste, SW-846.

———. 1987. A Compendium of Superfund Field Operations Methods, EPA 540-P87-001.

———. 1991. A Compendium of ERT Soil Sampling and Surface Geophysics Procedures.

ED_004144A_00000101-00730

This page intentionally left blank

ED_004144A_00000101-00731

Standard Operating Procedure No. 042
for
Disposal of
Investigation-Derived Material

Prepared by

EA Engineering, Science, and Technology, Inc., PBC
225 Schilling Circle, Suite 400
Hunt Valley, Maryland 21031

Revision 1
December 2014

This page intentionally left blank

CONTENTS

Page

1. SCOPE AND APPLICATION 1

2. MATERIALS 1

3. PROCEDURE 1

   3.1 General 1
   3.2 Procedures for Liquid Investigation-Derived Material Disposal 2
   3.3 Procedures for Solid Investigation-Derived Material Disposal 3
   3.4 Procedures for Decontamination Solution and Personal Protective Equipment Disposal 6

4. MAINTENANCE 6

5. REFERENCES 6

ED_004144A_00000101-00734

This page intentionally left blank

ED_004144A_00000101-00735

1. SCOPE AND APPLICATION

The purpose of this Standard Operating Procedure is to define the required steps for disposing of investigation-derived material (IDM) generated during field activities.

IDM, as used herein, includes soil cuttings, drilling muds, extraneous sediment, purged groundwater, decontamination fluids, and disposable personal protective equipment. For the sake of clarity and ease in use, this Standard Operating Procedure is subdivided into procedures for disposal of liquid IDM and solid IDM as follows:

- Liquid IDM (Section 3.2) includes the following materials:
  - Water from initial development of new wells and the redevelopment of existing wells
  - Purge water from groundwater sampling
  - Decontamination fluids (Section 3.4)
- Solid IDM (Section 3.3) consists of the following materials:
  - Soil drill cuttings from monitoring well installation
  - Sediment remaining after collection of the required sample volume
  - Grout, a mixture of cement and bentonite, generated during installation of monitoring wells
  - Disposable personal protective equipment (Section 3.4).

2. MATERIALS

The following materials may be required:

Any additional equipment that may be dictated by project or site-specific plans	Hazardous waste labels
Bar codes	Permanent marker
Chain-of-custody forms	Field logbook (bound)
Department of Transportation 17C specification metal containers	Waste identification labels

3. PROCEDURE

3.1 GENERAL

No container will be labeled as a “Hazardous Waste” unless the contents are in fact known to be hazardous as defined by 40 Code of Federal Regulation 261.

ED_004144A_00000101-00736

IDM may be disposed onsite if it is: (1) initially screened, or evaluated to determine whether it is contaminated; (2) not abandoned in an environmentally unsound manner; and (3) not inherently waste-like.

IDM is to be considered contaminated if: (1) it is visually or grossly contaminated; (2) it has activated any field monitoring device that indicates that the level exceeds standard Level 1; (3) it has previously been found to exhibit levels of contamination above environmental quality standards; and (4) the responsible party and/or appropriate regulator deem(s) that records of historical uses indicate that additional testing of the IDM is needed, or additional caution is warranted handling IDM from a given site.

3.2 PROCEDURES FOR LIQUID INVESTIGATION-DERIVED MATERIAL DISPOSAL

Listed below are the procedures for the disposal of liquid IDM:

1. All water from the initial development of new wells, and purge water generated during the first round of groundwater sampling, will be containerized in Department of Transportation approved 55-gallon drums. Decontamination fluids may be bulk-containerized until completion of the field task.

2. Label all containers as to type of media, date the container was sealed, point-of-generation, and points-of-contact. The well number and container number will be identified on the container.

3. The contractor/support personnel will log all media generated onsite into a bound Field Logbook. Media information should include the following: date of generation, contents of containers, number of containers with the same contents (if applicable), location of containers, well number the media is associated with, personnel sampling the media, sampling dates, and sampling results.

4. Containers of well development water and purge water may be stored at the well site pending the first round analytical results.

5. Laboratory turnaround time must be no greater than 30 days. Upon receipt of the analytical results, a copy will be furnished to the client within 3 working days. Both the client and contractor will evaluate the data to determine disposal requirements, per state and local regulations. A disposal decision is required within 10 days of receipt of sampling results. Appropriate disposal must be performed no later than 50 days from the

1. This value is defined as two times background, where "background" values are to be determined as follows: (1) regional background values will be used where they are available; and (2) if regional values are not available, background may be empirically determined at uncontaminated sampling sites using onsite sensors such as organic vapor analyzers (photoionization detector or flame ionization detector), scintillometers, etc.

ED_004144A_00000101-00737

decision date unless prevented by inclement weather (e.g., rain and muddy conditions may preclude site access, freezing weather may freeze media).

Dispose of media in accordance with Steps 6 and 7 of this procedure, as appropriate.

6. If the first round analytical data of the liquid media are below the Maximum Contaminant Levels established by the Federal Safe Drinking Water Act, the water may be gradually infiltrated into the ground at least 50 feet downgradient of the well.

   If the well location has no downgradient area, the water will be infiltrated into the ground in an area deemed appropriate by the client and the contractor/support personnel.

   Disposal locations must allow percolation of the water and prohibit "ponding."

   Upon completion of water discharge to ground, enter type of media, amount of media, date of disposal, and discharge point(s) in a bound Field Logbook and provide this information to the client.

   Empty containers are to be properly decontaminated, stored, and reused by the appropriate personnel.

   If the liquid media sampling results do not meet the required Maximum Contaminant Levels and cannot be discharged to the ground, then determine if the waste meets the sanitary sewer discharge criteria (National Pollutant Discharge Elimination System standards).

7. If, at any time, visual contamination of purge/development water is observed, or if organic vapor monitor readings (HNu, photoionization detector) register more than 5 parts per million above background and/or radiological meters register more than twice the background mrems, then the liquid will be drummed and a composite sample will be taken that day. A disposal decision will be based on the analytical results of this sample rather than the first round of analytical results.

3.3 PROCEDURES FOR SOLID INVESTIGATION-DERIVED MATERIAL DISPOSAL

Listed below are the procedures for the disposal of solid IDM:

1. If the conditions outlined in Section 3.1 are met, proceed to Section 3.3, Step 2; otherwise, proceed to Section 3.3, Step 7.

2. During soil drilling operations or sediment sampling, the resulting cuttings, mud, and/or extraneous sediment will be discharged onto the ground (or waterbody for sediment) near the well (or sample location for sediment) if the following conditions are met: (1) no visual contamination is observed, (2) organic vapors are less than 5 parts per million

ED_004144A_00000101-00738

above background, (3) radiological meter readings (if applicable) are under two times background, and (4) the medium has been screened and found to be less than two times background if the potential for contamination exists.

Proper sediment and erosion control measures will be implemented as follows:

- Soil drill cuttings will be uniformly spread and contoured to blend with the surroundings of the site.
- If amount of solid IDM exceeds 5,000 square feet or 100 cubic yards of material, a sediment and erosion control plan is required.
- If the amount of solid IDM is under 5,000 square feet or 100 cubic yards, the site will be stabilized as soon as possible. Stabilization includes mulch, seed, and tack.
- Critical areas require stabilization within 7 days from the date of well completion. Critical areas include swales, water sources, drainage ditches, etc.
- All other disturbed areas require stabilization within 14 days from the date of well completion.

3. If the well location is in or near a wetland, the soil drill cuttings will be drummed and transported away from the site for spreading.

4. Label all IDM containers that will not be spread on the day of generation. Each container should be labeled with the type of media, date the container was sealed, point-of-generation, and name of the contact person. The well number or sample location and container number should be identified on the container.

5. The contractor/support personnel will log all media generated onsite into a bound Field Logbook. Media information should include: date of generation, contents in containers, number of containers with the same contents, location of containers, and well number or sample location the media is associated with.

6. Containers will be staged at the well site until contractor/support personnel spread the cuttings in the appropriate locations, using proper sediment and erosion control measures per Section 3.3.

7. If soil drilling mud, cuttings, or sediment show visible contamination, or organic vapor readings are more than 5 parts per million above background levels, or radiological meter readings (if applicable) show greater than two times background levels, or if the potential for contamination exists (levels greater than two times background), media will immediately be containerized, labeled appropriately (Section 3.2), and sampled on the same day.

ED_004144A_00000101-00739

8. The solid IDM should be sampled and appropriate Toxicity Characteristic Leaching Procedure analyses conducted prior to determining disposition. Laboratory turn-around time must be no greater than 30 days. Upon receipt of analytical results, a copy will be furnished to the client within 3 working days. The contractor will evaluate the data to determine disposal requirements within 10 days. Appropriate disposal must be performed no later than 50 days after the decision date if weather permits (Section 3.2).

    - If the solid IDM is determined to be non-hazardous and uncontaminated, proceed to Section 3.3.
    - If the solid IDM is determined to be non-hazardous but contaminated, proceed to Section 3.3.
    - If the solid IDM is found to be hazardous wastes, proceed to Section 3.3.

9. If the solid IDM is not a hazardous waste **and** analytical data show contaminant concentrations below the U.S. Environmental Protection Agency Region 3 (or applicable Region where work is being performed) Risk-Based Concentrations, contact the appropriate federal, state, or local agency for approval to discharge onto the ground or back to the waterbody near the site of generation.

    - Follow steps detailed in Section 3.3, Step 2 (above) pertaining to sediment and erosion control.
    - Upon completion of the solid IDM discharge to the ground or waterbody (for sediment), enter type of media, amount of media, date of disposal, and discharge point(s) in a bound Field Logbook. This information must be provided to the client.
    - Empty containers are to be properly decontaminated, stored, and reused by appropriate personnel.

10. If the intrusive media is not a hazardous waste but analytical data show concentrations above the screening criteria, dispose of the IDM according to state and local regulations.

    - Ensure that the waste containers are properly labeled as applicable in accordance with Section 3.3, Step 4.
    - Inform the client of the type and amount of waste, and location of the waste.
    - When the waste is removed, enter the type of waste, amount of waste, date of pickup, and destination of the waste in a bound Field Logbook. This information must be provided to the client.

ED_004144A_00000101-00740

3.4 PROCEDURES FOR DECONTAMINATION SOLUTION AND PERSONAL PROTECTIVE EQUIPMENT DISPOSAL

Decontamination solutions include catch water from steam-cleaning operations performed on large sampling equipment, drill rigs, and drums, as well as smaller quantities of soapy water and rinse solutions used in decontaminating field sampling equipment. At the completion of the field event, a composite sample of the decontamination solution will be taken. The decontamination solution will be treated as liquid IDM pending results (Section 3.2).

Personal protective equipment will be containerized onsite, appropriately labeled, and disposed in a designated trash receptacle.

4. MAINTENANCE

The waste manifest document and bill of lading should be uploaded to the project file as soon as possible in either hard copy or electronic format. Refer to EA's Records Retention Policy for archiving information.

5. REFERENCES

Environment Article Section 7-201(t).

U.S. Environmental Protection Agency. 1991. Management of Investigation-Derived Wastes during Site Inspections PB91-921331, OERR Directive 9345.3-02. Office of Emergency and Remedial Response U.S. Environmental Protection Agency, Washington, D.C. May.

ED_004144A_00000101-00741

Standard Operating Procedure No. 043 for Multi-Probe Water Quality Monitoring Instruments

Prepared by

EA Engineering, Science, and Technology, Inc., PBC
225 Schilling Circle, Suite 400
Hunt Valley, Maryland 21031

Revision 1
December 2014

This page intentionally left blank

CONTENTS

Page

1. PURPOSE AND SCOPE 1

2. MATERIALS 1

3. CALIBRATION PROCEDURE 1

   3.1 Conductivity Calibration 2
   3.2 pH Calibration 2
   3.3 Dissolved Oxygen Calibration 2
   3.4 Oxidation Reduction Potential Calibration 2
   3.5 Turbidity Calibration 2
   3.6 Depth/Level Calibration 2
   3.7 Additional Calibrations 3

4. FIELD OPERATION 3

   4.1 Setup of Multi-Probe Water Quality Instrument 3
   4.2 Surface Water 3
   4.3 Groundwater 3

5. MAINTENANCE 3

6. PRECAUTIONS 4

7. REFERENCES 4

ED_004144A_00000101-00744

This page intentionally left blank

ED_004144A_00000101-00745

1. PURPOSE AND SCOPE

The purpose of this Standard Operating Procedure is to delineate protocols for field operation of multi-probe water quality instruments. The instrument can monitor a variety of basic parameters including dissolved oxygen, percent saturation, temperature, pH, specific conductance, resistivity, salinity, total dissolved solids, oxidation reduction potential (ORP), level, and depth.

Use of brand names in this Standard Operating Procedure is not intended as endorsement or mandate that a given brand be used. Alternate equivalent brands of detectors, sensors, meters, etc. are acceptable. If alternate equipment is to be used, the contractor will provide applicable and comparable standard operating procedures for the maintenance and calibration of same.

2. MATERIALS

The following materials may be required:

- Multi-probe instrument
- Probe/sonde with appropriate cables
- Appropriate standards
- Accessories (batteries, charger, case, etc.)
- Instrument logbook
- Manufacturer's Operations Manual.

3. CALIBRATION PROCEDURE

Calibration must be performed daily at a minimum before using the instrument. Calibration may be performed in the laboratory or in the field. Detailed step-by-step calibration procedures for the equipment described below are provided in the most recent version of the manufacturer's Operations Manual. Documentation includes at a minimum: time, date, analyst, standard, primary standard lot number, secondary standard lot number, and expiration dates of standards.

Fill the calibration cup with the appropriate standard as follows:

- Temperature: None required
- Specific Conductance: Conductivity standards
- pH: pH 7 buffer plus pH 4 and/or pH 10 buffer
- Dissolved Oxygen: Saturated air or saturated water
- ORP: Quinhydrone (Zobell's Solution)
- Turbidity: Nephelometric turbidity unit (NTU) standards
- Salinity: Calibration for specific conductance
- Depth/Level: Set zero in air.

ED_004144A_00000101-00746

3.1 CONDUCTIVITY CALIBRATION

Conductivity meters are calibrated at least once per day to at least one standard. The standard should be selected in accordance with the range expected to be measured (e.g., 1.0 µS/cm standard should not be used to calibrate meters being used in saltwater). See manufacturer's recommendations in the Operations Manual for additional information on calibration standard selection. Calibration information is recorded in conjunction with the data collected for that sampling event.

3.2 pH CALIBRATION

The pH meters are calibrated at least once per day to a minimum of two standard buffers (pH 4 and 7, or pH 7 and 10) in accordance with the range expected to be measured. The calibration is verified using a fresh solution of pH 7 buffer post-calibration. Calibration information is recorded in conjunction with the data collected for that sampling event.

3.3 DISSOLVED OXYGEN CALIBRATION

Dissolved oxygen meters are air calibrated at least once per day. Calibration information is recorded in conjunction with the data collected for that sampling event.

3.4 OXIDATION REDUCTION POTENTIAL CALIBRATION

ORP meters are calibrated at least once per day to at least one standard. It is recommended that Zobell's Solution is used; however, another solution can be used as long as it meets the manufacturer's specifications for calibration. Calibration information is recorded in conjunction with the data collected for that sampling event.

3.5 TURBIDITY CALIBRATION

The turbidity meters are calibrated at least once per day to a minimum of two standards (0 NTU and 100 or 126 NTUs recommended) in accordance with the range expected to be measured. Calibration information is recorded in conjunction with the data collected for that sampling event.

3.6 DEPTH/LEVEL CALIBRATION

The depth and level calibration is performed with the depth sensor module in the air and not immersed in any solution. The appropriate correction for height above the water surface is inputted into the meter. Calibration information is recorded in conjunction with the data collected for that sampling event.

ED_004144A_00000101-00747

3.7 ADDITIONAL CALIBRATIONS

Additional measurements may be taken with the multi-probe water quality instruments. For any of these measurements, the calibration procedures will be conducted in accordance with the manufacturer's specifications. Calibration information is recorded in conjunction with the data collected for that sampling event.

4. FIELD OPERATION

4.1 SETUP OF MULTI-PROBE WATER QUALITY INSTRUMENT

Post-calibration and prior to sampling, the multi-probe water quality instrument will be set up for data collection. If the cables have been unattached, they will be reconnected to the transmitter (if applicable) and the display. Once all cables are attached, the meter will be turned on and allowed to warm up for a few seconds in order to allow the display screen to load.

4.2 SURFACE WATER

Prior to sampling, check the condition of the probes before each deployment. When sampling in surface water, the sensor must be in an amount of water sufficient for all probes to be submerged. Data values displayed on the display screen are recorded in the field logbook and accepted into the instrument's data logger. Post-data collection, the sensor will be retrieved and rinsed for use at the next sample location. If travel time between sample locations is great, the display is to be turned off. When all sampling is completed, disconnect all equipment and return it to its proper storage location.

4.3 GROUNDWATER

Prior to sampling, check the condition of the probes before each deployment. When sampling groundwater, mount sampler on a flow-through sampler cup. Start sampler pump and allow pump/hose system to be purged of air bubbles. Sampling rate should be set to record all parameters each time 1-3 liters (unless otherwise specified in the sampling plan) have been removed from the well. Record all the monitored values in the appropriate field logbook to ensure against inadvertent data loss.

5. MAINTENANCE

All maintenance should be performed in accordance with the manufacturer's Operations Manual.

ED_004144A_00000101-00748

6. PRECAUTIONS

Check the condition of the probes frequently between sampling. Do not force pins into connections, note keying sequence. If field readings are outside the expected range, check for bubbles on, or damage to, the probes. If there are no bubbles or damage, recalibrate the sensor.

7. REFERENCES

Manufacturer's Operations Manual.

ED_004144A_00000101-00749

Standard Operating Procedure No. 046
for
Aqueous Diffusion Samplers

Prepared by

EA Engineering, Science, and Technology, Inc., PBC
225 Schilling Circle, Suite 400
Hunt Valley, Maryland 21031

Revision: 0
December 2014

This page intentionally left blank

CONTENTS

Page

1. SCOPE OF APPLICATION 1

2. CONSTRUCTION OF AQUEOUS DIFFUSION SAMPLERS 1

3. EQUIPMENT/MATERIALS 1

   3.1 Aqueous Diffusion Sampler Placement 1
   3.2 Aqueous Diffusion Sampler Retrieval 2
   3.3 Preliminary Site Activities 2
   3.4 Sampling Procedure 3
   3.5 Sample Preservation 4
   3.6 Field Quality Control 4

ED_004144A_00000101-00752

This page intentionally left blank

ED_004144A_00000101-00753

1. SCOPE OF APPLICATION

The purpose of this Standard Operating Procedure is to establish the protocol for collecting groundwater samples using aqueous diffusion samplers. The procedure is designed to permit the collection of representative groundwater samples for analysis of volatile organic compounds (VOCs).

2. CONSTRUCTION OF AQUEOUS DIFFUSION SAMPLERS

The aqueous diffusion samplers are constructed by sealing de-ionized water in a 2-in. diameter × 1-mil thick polyethylene tubing. The de-ionized water is sealed in the poly tubing by using a heat seal device. One end of the poly tube is rolled over onto itself several times, then heat is applied to seal this end. The poly tube is then filled with de-ionized water. The top end (unsealed end) of the tube is then rolled over onto itself until there is no headspace in the poly tube; heat is then applied to seal this end. Care is taken to ensure that no headspace or air bubbles are present in the tube prior to sealing the top end. Each diffusion sampler is approximately 2 ft in length. The samplers are weighted with stainless steel bolts enclosed in 4-mil polyethylene tubing attached to the bottom of the sampler, and a string is attached to the top of the sampler for placement and retrieval.

3. EQUIPMENT/MATERIALS

3.1 AQUEOUS DIFFUSION SAMPLER PLACEMENT

- Well construction data, location map, and field data from the previous sampling event.
- Field logbook and Field Record of Well Gauging, Purging, and Sampling form (Figure SOP046-1).
- Electronic water level measuring device, 0.01-ft accuracy for monitoring water level prior to installation of the diffusion sampler.
- Diffusion sampler constructed of 2 ft length × 2 in. width 1-mil polyethylene lay-flat tubing filled with de-ionized water and weight attached to bottom.
- Twine, string, or rope. The depth of each sampler should be established prior to field placement so enough twine, string, or rope is available for installation.

ED_004144A_00000101-00754

3.2 AQUEOUS DIFFUSION SAMPLER RETRIEVAL

- Volatile organic analyte sample bottles and sample preservation supplies (as required by the analytical methods) needed for diffusion sampler retrieval.
- Sample tags or labels.
- Cooler with bagged ice for storage of sample bottles during shipment to a laboratory.

3.3 PRELIMINARY SITE ACTIVITIES

The following site activities are required prior to performing aqueous diffusion sampler installation and retrieval. Field logbooks and sampling forms should be filled out as the procedure is being performed, as noted:

- Enter the following information in the field logbook and installation and retrieval form, as appropriate: site name, project number, field personnel, well identification, weather conditions, date and time, equipment used, and quality assurance/quality control data for field instrumentation.
- Check well for damage or evidence of tampering, and record pertinent observations in field logbook and field sampling form.
- Unlock well and remove well cap (if applicable).
- Measure VOCs with a photoionization detector instrument at the rim of the well and in the breathing zone, and record the readings in the field logbook and the field sampling form.
- Measure and record the height of protective casing above the concrete pad or ground surface, as appropriate. This reading is compared to that recorded during well installation as an indication of possible well damage or settling that may have occurred.
- Measure and record the depth to water (to 0.01 ft) in the well to be sampled before installation of the aqueous diffusion sampler begins. If the well casing does not have a reference point (usually a v-cut or indelible mark in the well casing), make one. Care should be taken to minimize disturbance of any particulate attached to the sides or at the bottom of the well. The depth to well bottom will be measured prior to installation of the sampler.

ED_004144A_00000101-00755

3.4 SAMPLING PROCEDURE

The following general procedures should be followed to obtain representative groundwater samples. Field logbooks and sampling forms should be filled out as the procedure is being performed, as noted:

- Enter the following information in the field logbook and field sampling form, as appropriate, prior to installation of the diffusion sampler: date and time of sampler installation, depth of sampler, and total depth of well.
- Prepare the diffusion sampler by attaching weight at the base of the sampler and a string to the top of the sampler.
- Install the sampler at the predetermined depth. Depth of sampler will be determined on a well-by-well basis based on previous low-flow sampling data, or previously collected aqueous diffusion samplers.
- Allow the diffusion to equilibrate for approximately 21 days. Return after approximately 21 days to retrieve the sampler.
- Enter the following information in the field logbook and field sampling form, as appropriate, during retrieval of diffusion sampler: date and time of sampler retrieval, analytical method, and quality assurance/quality control as necessary.
- Retrieve the diffusion sampler from the well.
- After retrieval is complete, remove string and weight, and make a diagonal cut towards the top of the sampler. The diagonal cut allows easier filling of the sample containers.
- Begin filling the sample containers from the diagonal cut, allowing the water to fill the volatile organic analyte sample containers by allowing the water to flow gently down the inside of the container with as little agitation or minimal aeration as possible.
- Label each sample as it is collected. Samples will be placed into a cooler with ice for delivery to a laboratory.
- After collection of the samples, the wells will be capped and locked.
- Complete remaining portions of field sampling form after each well is sampled, including sample date and time (time of retrieval from the well), well sampling sequence, types of sample bottles used, sample identification numbers, preservatives used, parameters requested for analysis, and field observations of the sampling event.

ED_004144A_00000101-00756

3.5 SAMPLE PRESERVATION

- **VOCs**—Fill the sample bottle pre-preserved with hydrochloric acid, seal with a teflon-lined cap, and place in a cooler with ice for shipment to a laboratory. Cooler will maintain a temperature of 4°C for shipment to the laboratory.

Note that aqueous diffusion samplers are not submitted for other laboratory analytical parameters.

3.6 FIELD QUALITY CONTROL

Quality control samples are required to verify that the sample collection and handling process has not affected the quality of the groundwater samples. Field quality control samples must be prepared exactly as regular investigation samples with regard to sample volume, containers, and preservation. The following quality control samples will be collected for each sample delivery group (a sample delivery group may not exceed 20 samples) at the frequency noted:

- ***Equipment Blank***—One aqueous diffusion sampler will be constructed and submersed in a sealed container with de-ionized water for the 21-day equilibration period. This equipment duplicate should be analyzed the same as the other samplers to determine if materials used for aqueous diffusion samplers may have outgased VOCs, or otherwise affected laboratory analytical results.

- ***Field Duplicate***—Required at a frequency of 10 percent per sample delivery group, as per the site Long-Term Monitoring Plan.

- ***Matrix Spike/Matrix Spike Duplicate***—Required at a frequency of 5 percent, as per the site Long-Term Monitoring Plan.

- ***Trip Blank***—Required for VOC samples at a frequency of one per sample shipment, as per the site Long-Term Monitoring Plan.

ED_004144A_00000101-00757

FIELD RECORD OF WELL GAUGING, PURGING, AND SAMPLING

Site Name:		Project Number:	
Well ID:		Well Lock Status:	
Well Condition:		Weather:	

Gauge Date:		Gauge Time:	
Sounding Method:		Measurement Ref:	
Stick Up/Down (ft):		Well Diameter (in.):	

Purge Date:		Purge Time:	
Purge Method:		Field Personnel:	
Ambient Air VOCs (ppm):		Well Mouth VOCs (ppm):	

WELL VOLUME

A. Well Depth (ft):		D. Well Volume/ft (L):	
B. Depth to Water (ft):		E. Well Volume (L) (C*D):	
C. Liquid Depth (ft) (A-B)		F. Three Well Volumes (L) (E*3):	

G. Measurable LNAPL? Yes _____ /ft No _____

Parameter	Beginning	1	2	3	4	5
Time (min.)						
Depth to Water (ft)						
Purge Rate (L/min)						
Volume Purged (L)						
pH						
Temperature (°C)						
Conductivity (µmhos/cm)						
Dissolved Oxygen (mg/L)						
Turbidity (NTU)						
eH (mV)						

Total Quantity of Water Removed (L):			
Samplers:		Sampling Time (Start/End):	
Sampling Date:		Decontamination Fluids Used:	
Sample Type:		Sample Preservatives:	
Sample Bottle IDs:			
Sample Parameters:			

ED_004144A_00000101-00758

This page intentionally left blank

Standard Operating Procedure No. 047
Direct-Push Technology Sampling

Prepared by

EA Engineering, Science, and Technology, Inc., PBC
225 Schilling Circle, Suite 400
Hunt Valley, Maryland 21031

Revision: 0
December 2014

This page intentionally left blank

CONTENTS

Page

1. SCOPE AND APPLICATION 1

2. MATERIALS 1

3. GEOPROBE® AND HYDROPUNCH® 1

   3.1 Materials 1
   3.2 Groundwater – Hydraulic Pushing and Sampling 2
   3.3 Subsurface Soil – Hydraulic Pushing and Sampling 3
   3.4 Decontamination 4
   3.5 Abandonment 4

4. CONE PENETROMETER TESTING 5

   4.1 Materials 5
   4.2 Subsurface Characterization 5
   4.3 Decontamination 6
   4.4 Abandonment 6

5. SITE CHARACTERIZATION AND ANALYSIS PENETROMETER SYSTEM 7

   5.1 Materials 7
   5.2 Hydraulic Pushing and Sampling 7
   5.3 Decontamination 8
   5.4 Abandonment 9

6. MAINTENANCE 9

7. PRECAUTIONS 9

8. REFERENCES 9

ED_004144A_00000101-00762

This page intentionally left blank

ED_004144A_00000101-00763

1. SCOPE AND APPLICATION

This Standard Operating Procedure (SOP) establishes the protocol for using direct-push technology (DPT) in media sampling and performing subsurface characterization. This SOP includes the following DPT methods: Geoprobe®, Hydropunch®, Cone Penetrometer Testing (CPT), and Site Characterization and Analysis Penetrometer System (SCAPS).

2. MATERIALS

The following materials may be required:

Appropriately sized, all-terrain vehicle-skid-or track-mounted; DPT equipment; and supplies (i.e., hydraulic derrick and hammer assembly)	Personal protective equipment
Bentonite grout and clean sand for DPT hole abandonment	Phosphate-free, laboratory-grade detergent (e.g., Liquinox, Alconox, etc.)
DPT stainless steel rods	Source of approved water
Heavy plastic sheeting	Steam cleaner/sprayer and water obtained from approved source for decontaminating DPT equipment
Logbook	Steel drums for intrusion derived wastes (e.g., contaminated personal protective equipment, decon solutions, etc.)
Long-handled bristle brushes	Wash and rinse tubs
Mini-bailer or tubing and peristaltic pump (groundwater sampling only)	

3. GEOPROBE® AND HYDROPUNCH®

3.1 MATERIALS

Water sources for Geoprobe® and Hydropunch® activities, grouting, sealing, filter placement, well installation, and equipment decontamination must be approved by the Project Manager prior to arrival of the Geoprobe® and Hydropunch® equipment. Information required for the water source includes: water source, manufacturer/owner, address and telephone number, type of treatment and filtration prior to tap, time of access, cost per gallon (if applicable), dates and results associated with all available chemical analysis over the past 2 years, and the name and address of the analytical laboratory (if applicable).

Pure sodium bentonite with no additives will be the only additive allowed, and its use must be approved by the Project Manager prior to the arrival of the Geoprobe® and Hydropunch® equipment. The information required for evaluation includes: brand name, manufacturer, manufacturer's address and telephone number, product number, product description, and intended use for the product.

ED_004144A_00000101-00764

Portland Type II cement will be used for grout (refer to SOP No. 019).

3.2 GROUNDWATER – HYDRAULIC PUSHING AND SAMPLING

The objective of the selected DPT sampling technique is to allow grab samples to be taken at a selected site to facilitate aquifer characterization and analysis of potential contaminants. The analytical results from sampling can also be used to determine the placement of monitoring wells.

A site geologist will be present during all sampling and installation procedures, and will fully document all procedures and soil characteristics in the Field Logbook (refer to SOP No. 016).

The site geologist will have on hand, at a minimum, a copy of the approved Health and Safety Plan, this SOP, the Field Investigation Work Plan, a hand lens (10X), a standard color chart, and a grain size chart.

Only solid vegetable shortening (e.g., Crisco®) without flavoring or additives may be used on downhole Geoprobe® and Hydropunch® equipment.

Surface runoff or other fluids will not be allowed to enter any DPT location or well during or after DPT activities.

The subcontractor will use the equipment specific guidelines for installation of the Geoprobe® DPT equipment. Probe rods will be forced into the ground by hydraulic means.

- Drive the sampler to the desired groundwater sampling interval. At the desired depth, insert extension rods down the inside diameter of the probe rods until the extension reaches the bottom of the screen. Remove the probe rods and sampler sheath while holding the screen in place.

- Collect the groundwater sample in the screen interval with a mini-bailer, peristaltic or vacuum pump, or other acceptable small diameter sampling device.

- The head of the rod may be equipped with a sensing device for characterization of soil properties or the contaminant content.

The subcontractor will use the equipment-specific guidelines for installation of the Hydropunch® equipment. Rods will be forced into the ground by hydraulic means.

- The Hydropunch® tool is a double cylinder, designed to be sealed until the desired sampling depth is reached. Upon reaching the desired sampling depth, the outer cylinder is pulled back, exposing a perforated, stainless steel sampling barrel covered with filter material.

- The water sample enters the barrel and the sample is retrieved by pulling the probe rods from the hole with the hydraulic derrick and hammer assembly. Groundwater is the only media that is sampled by Hydropunch® equipment.

ED_004144A_00000101-00765

- The head of the rod may be equipped with a sensing device for characterization of the soil properties or the contaminant content.

- The sample volume collected with this technique is approximately 500-1,000 ml. Larger sample volumes can be collected by inserting tubing attached to a peristaltic pump into the rods to obtain water samples.

If desired, a small diameter monitoring well may be installed at this point. Refer to SOP No. 019 (Monitoring Well Installation).

If a well will not be installed, the rods will be removed as the borehole is simultaneously filled with a bentonite/grout mixture. A polyvinyl chloride (PVC) tube fed into the rod casing will allow the addition of grout.

3.3 SUBSURFACE SOIL – HYDRAULIC PUSHING AND SAMPLING

The objective of the selected DPT sampling technique is to allow grab samples to be taken at a selected site for characterization of the stratigraphy and for analysis of potential contaminants. The analytical results from sampling can also be used to determine the placement of monitoring wells.

A site geologist will be present during all DPT sampling and soil characterization. All procedures and soil characteristics will be fully documented in the Field Logbook (refer to SOP No. 016).

The site geologist will have on hand, at a minimum, a copy of the approved Health and Safety Plan, this SOP, the Field Investigation Plan, a hand lens (10X), a standard color chart, and a grain-size chart.

Only solid vegetable shortening (e.g., Crisco®) without flavoring or additives may be used on downhole Geoprobe® equipment.

Surface runoff or other fluids will not be allowed to enter any DPT location or well during or after DPT activities.

The subcontractor will use the equipment specific guidelines for installation of the Geoprobe® DPT equipment. Probe rods will be forced into the ground by hydraulic means. Additional rods will be added in 3- to 4-ft increments until the leading edge of the sampler reaches the top of the desired sampling interval.

Once the desired sampling depth has been reached, insert extension rods down the inside diameter of the probe rods until it reaches the top of the sampler assembly. Attach the extension rod handle to the top extension rod. Turn the handle clockwise until the stop-pin detaches from the drive head. Remove the extension rods and the stop-pin. Attach a drive cap to the probe and drive the sampler approximately 2 ft using hydraulic derrick.

ED_004144A_00000101-00766

The DPT sampler can be retrieved by pulling the probe rods from the hole with the hydraulic derrick and hammer assembly.

The liner will be capped with Teflon® tape and vinyl end caps. The liners can be split open to remove samples for composition analysis or for transfer to other containers for shipment to the laboratory for analysis.

The head of the rod may be equipped with a sensing device for characterization of the soil properties or the contaminant content.

3.4 DECONTAMINATION

All Geoprobe® and Hydropunch® DPT equipment must be thoroughly cleaned before and after each use to allow retrieval of representative groundwater samples. Geoprobe® soil sample liners are disposed of after each use. Scrub all metal parts with a stiff, long bristle brush and a non-phosphate soap solution. Steam cleaning may be substituted where available. Rinse with distilled water and allow to air-dry before assembly.

After decontamination, a new clean liner will be installed and all parts will be inspected for wear or damage.

Refer to SOP No. 005 (Field Decontamination).

3.5 ABANDONMENT

Pure bentonite or a bentonite/grout mixture (20:1) will be used to fill the resulting borehole if the water table is penetrated. Boreholes that do not penetrate the water table will be backfilled with cuttings from the hole and topped with a bentonite seal. Clean sand will be used to fill any remaining volume in the borehole.

Abandonment of Geoprobe® and Hydropunch® generated DPT boreholes will meet the standards established under SOP No. 028 (Well and Boring Abandonment).

ED_004144A_00000101-00767

4. CONE PENETROMETER TESTING

4.1 MATERIALS

A CPT rig typically consists of an enclosed 20- to 40-ton truck equipped with vertical hydraulic rams that are used to force a sensor probe into the ground. The weight of the CPT rig is dependent upon the thrust required at the site. The majority of CPT rigs are mounted in heavy-duty trucks that are ballasted to a total dead weight of approximately 15 tons. Screw anchors are utilized to develop the extra reaction to reach the maximum thrust of 20 tons. The rig is separated into two separate workspaces: data acquisition and hydraulic push areas.

Water sources for CPT activities and decontamination must be approved by the Project Manager prior to arrival of the CPT equipment. Information required for the water source includes: water source, manufacturer/owner, address and telephone number, type of treatment and filtration prior to tap, time of access, cost per gallon (if applicable), dates and results associated with all available chemical analysis over the past 2 years, and the name and address of the analytical laboratory (if applicable).

Pure sodium bentonite with no additives will be the only additive allowed, and its use must be approved by the Project Manager prior to the arrival of the DPT equipment. The information required for evaluation includes: brand name, manufacturer, manufacturer's address and telephone number, product number, product description, and intended use for the product.

Portland Type II cement will be used for grout (refer to SOP No. 019).

4.2 SUBSURFACE CHARACTERIZATION

The objective of this technology is to collect stratigraphic information using CPT equipment to determine subsurface stratigraphy and geotechnical properties at a particular site. CPT activities will be in accordance with American Society for Testing and Materials D 3441-86 and American Society for Testing and Materials D 5778-95. The stratigraphic information gathered can be used to facilitate the selection of DPT sampling screen intervals. At the same time, it is possible to install a 0.25-in. diameter pre-packed PVC monitoring well.

CPT rods are used to hydraulically push the CPT probe into the subsurface. Probes cannot be pushed into hard rock, and significant gravel or cobble content in the formation may impede or preclude penetration of the probe. The depth of penetration achievable depends on the type of formation, type of sampling probe, and size of the hydraulic equipment used.

The CPT probe includes the following components:

- A conical tip to measure vertical resistance beneath the tip.
- A friction sleeve to measure frictional resistance on the side of the probe, as a function of depth.

ED_004144A_00000101-00768

- Two internal strain gauge-type load cells, which independently measure the vertical resistance and side friction.
- A cone pressure gauge to measure the water pressure as the probe is pushed into the ground.
- Inclinometer to determine potential drifting of the probe (optional).
- Seismic transducers to perform downhole seismic surveys (optional). Therefore, stratigraphic data collected with the CPT include: tip resistance, local friction, friction ratio, pore pressure, and resistivity.

Data will be transferred from the probe to the data acquisition system or logger through an electrical cable. The hole will be advanced continuously at a rate of 0.6-1.0 in. per second. The data will be logged at every 0.4-0.8 in. of penetration. Monitor the probe's stratigraphic position will be monitored as it advances downward. Perform pore water pressure dissipation tests in representative hydrostratigraphic intervals. Record dissipated pore water pressures to represent hydraulic head values.

Once the confining unit underlying the surficial aquifer or the required depth has been reached, the CPT is pulled from the ground. Target interval samples can be collected during CPT hole advancement using direct push sampling techniques, i.e., Geoprobe® or Hydropunch® (Section 3).

4.3 DECONTAMINATION

All CPT equipment must be thoroughly cleaned before arrival at the work site, between test holes, and prior to being moved out of a work area. Scrub all metal parts with a stiff, long bristle brush and a non-phosphate soap solution. Steam cleaning may be substituted where available. Rinse with distilled water and allow to air-dry before assembly.

Refer to SOP No. 005 (Decontamination).

4 .4 ABANDONMENT

If the push hole was developed for the stratigraphic test only, once the testing is completed, grout the hole from bottom to top. If the hole has not collapsed after removing the CPT, PVC piping will be used to grout the hole. If the hole has collapsed after removing the CPT, then hollow CPT rods and a sacrificial tip will be used to grout the hole. The PVC pipe or CPT rods will be pushed to the bottom of the hole. Grout will then be pumped to the bottom of the hole as the PVC pipe or CPT rods are withdrawn.

Refer to SOP No. 028 (Well and Boring Abandonment).

ED_004144A_00000101-00769

5. SITE CHARACTERIZATION AND ANALYSIS PENETROMETER SYSTEM

5.1 MATERIALS

SCAPS cone penetrometer and laser induced fluorescence (LIF) technology requires the use of a specialized 20-ton truck. The truck has two separate enclosed compartments. Each compartment is temperature controlled and monitored for air quality. The two rooms are the data acquisition and processing room, and the hydraulic ram/rod handling room. Approximately 20 ft of overhead clearance is required to fully extend the hydraulic ram and allow for leveling jack movement.

All materials required to complete SCAPS analysis are provided by the subcontractor to include cone penetrometer equipment. All hydraulic equipment, SCAPS rods, nitrogen lasers, etc. are included within the vehicle. A decontamination water source and a source of water for mixing the grout are required.

Water sources for equipment decontamination must be approved by the Project Manager prior to arrival of the SCAPS equipment. Information required for the water source includes: water source, manufacturer/owner, address and telephone number, type of treatment and filtration prior to tap, time of access, cost per gallon (if applicable), dates and results associated with all available chemical analysis over the past 2 years, and the name and address of the analytical laboratory (if applicable).

Pure sodium bentonite with no additives will be the only additive allowed, and its use must be approved by the Project Manager prior to the arrival of the SCAPS equipment. The information required for evaluation includes: brand name, manufacturer, manufacturer's address and telephone number, product number, product description, and intended use for the product.

Portland Type II cement will be used for grout (refer to SOP No. 019).

5.2 HYDRAULIC PUSHING AND SAMPLING

The objective of the SCAPS technique is to allow grab samples and stratigraphic information to be collected at a selected site to facilitate subsurface characterization and for analysis of potential contaminants. The analytical results obtained can also be used to determine the placement of monitoring wells. At the same time, it is possible to install a small diameter well for sampling purposes. Refer to SOP No. 019 (Monitoring Well Installation). If a well will not be installed, the borehole can be grouted as the equipment is removed.

A site geologist will be present during all installation and sampling procedures and will fully document all procedures and soil characteristics in the Field Logbook (refer to SOP No. 016).

The site geologist will have on hand, at a minimum, a copy of the approved Health and Safety Plan, this SOP, the Field Investigation Work Plan, a hand lens (10X), a standard color chart, and a grain-size chart.

ED_004144A_00000101-00770

Only solid vegetable shortening (e.g., Crisco®) without flavoring or additives may be used on downhole SCAPS equipment.

Surface runoff or other fluids will not be allowed to enter any DPT location or well during or after direct-push activities.

The subcontractor will use the equipment specific guidelines for installation of the SCAPS DPT equipment. Prior to SCAPS field activities, calibration soil samples will be collected and analyzed in order to determine the LIF sensor fluorescence threshold and detection limits for the site.

SCAPS LIF technology uses a pulsed nitrogen laser coupled with an optical detector to make fluorescence measurements via optical fibers. The LIF sensor is mounted on a cone penetrometer probe so that soil classification data and fluorescence data are collected simultaneously. The laser consumes nitrogen gas, which is supplied from cylinders stored on the accompanying trailer.

The SCAPS CPT sensors are used to gather stratigraphic information. See Section 4 for CPT operating procedures.

Target interval samples can be collected during SCAPS hole advancement using direct push sampling techniques such as Geoprobe® or Hydropunch® (Section 3).

5.3 DECONTAMINATION

Decontamination of SCAPS equipment is automated after initialization by a field team member. A pressurized hot water system is used to decontaminate the push rods as they are retracted from the ground. The SCAPS vehicle is equipped with a decontamination collar mounted to the bottom that cleans the rods. The decontamination water is removed by vacuum and transferred to a storage drum prior to disposal or treatment. A trailer attached to the back of the vehicle contains the water pump, heater for decontamination, and decontamination water containment drum.

Worker exposure is reduced by minimizing contact with contaminated media.

Refer to SOP No. 005 (Decontamination).

ED_004144A_00000101-00771

5.4 ABANDONMENT

SCAPS automatically grouts the penetrometer cavity as the rods are removed. The grout is pumped at high pressure through a 0.25-in. diameter tube in the center of the penetrometer rods. The tip is sacrificed at the bottom of the cavity to allow release of the grout.

A trailer attached to the back of the vehicle contains the 300-gal grout mixing bin and pump.

If the automatic grout feed does not work, the cavity will be manually filled with grout.

Abandonment of SCAPS generated borehole will meet the standards established under SOP No. 028 (Well and Boring Abandonment).

6. MAINTENANCE

Not applicable.

7. PRECAUTIONS

Refer to the site-specific Health and Safety Plan for discussion of hazards and preventive measures during intrusive activities.

8. REFERENCES

American Society for Testing and Materials (ASTM). 1986. ASTM Designation D3441-86. American Society for Testing and Materials, Standard Test Method for Deep, Quasi-Static, Cone and Friction-Cone Penetration Test of Soil. December.

Battelle. 1994. Northern Boundary Area Ground Water Assessment Work Plan, Appendix B.

Department of Energy Environmental Management. 1998. Technology Description. World Wide Web Site: www.em.doe.gov/cgi-bin/parse/plumesfa/intech/conepen/tech.html. January.

(U.S.) Environmental Protection Agency (EPA). 1993. Subsurface Characterization and Monitoring_Techniques, Volume 1, Appendices A and B. May.

———. 1997. The Site Characterization and Analysis Penetrometer System Laser-Induced Fluorescence Sensor and Support System. Innovative Technology Verification Report. February.

ED_004144A_00000101-00772

Kejr Engineering, Inc. 1995. Geoprobe® Screen Point 15 Groundwater Sampler Standard Operating Procedure, Technical Bulletin No. 95-1500.

———. 1996a. Geoprobe® Large Bore Soil Sampler Standard Operating Procedure, Technical Bulletin No. 93-660.

———. 1996b. Geoprobe® Macro-Core® Soil Sampler Standard Operating Procedures, Technical Bulletin No. 95-8500.

ED_004144A_00000101-00773

Standard Operating Procedure No. 048
for
Low-Flow Sampling

Prepared by

EA Engineering, Science, and Technology, Inc., PBC
225 Schilling Circle, Suite 400
Hunt Valley, Maryland 21031

Revision 0
December 2014

This page intentionally left blank

CONTENTS

Page

1. GROUNDWATER SAMPLING BY LOW-FLOW PURGE AND SAMPLING METHOD USING DEDICATED PUMPS 1

   1.1 Scope of Application 1
   1.2 Equipment/Materials 1
   1.3 Preliminary Site Activities 2
   1.4 Well Purging and Sampling Procedure 3
   1.5 Sample Preservation 4
   1.6 Field Quality Control 5
   1.7 Decontamination 6

2. GROUNDWATER SAMPLING BY LOW-FLOW PURGE AND SAMPLING METHOD USING PERISTALTIC PUMPS 6

   2.1 Scope of Application 6
   2.2 Equipment/Materials 6
   2.3 Preliminary Site Activities 7
   2.4 Well Purging and Sampling Procedures 8
   2.5 Sample Preservation 10
   2.6 Field Quality Control 11
   2.7 Decontamination 11

3. SURFACE WATER AND LEACHATE SEEP SAMPLING PROCEDURE 12

   3.1 Scope of Application 12
   3.2 Equipment/Materials 12
   3.3 Preliminary Site Activities 12
   3.4 Sampling Procedure 13
   3.5 Sample Preservation 14
   3.6 Field Quality Control 15
   3.7 Decontamination 15

4. REFERENCES 16

ED_004144A_00000101-00776

This page intentionally left blank

ED_004144A_00000101-00777

1. GROUNDWATER SAMPLING BY LOW-FLOW PURGE AND SAMPLING METHOD USING DEDICATED PUMPS

1.1 SCOPE OF APPLICATION

The purpose of this Standard Operating Procedure (SOP) is to establish the protocol for collecting groundwater samples using dedicated pump systems. The procedure is designed to permit the collection of groundwater samples with minimum turbidity.

1.2 EQUIPMENT/MATERIALS

- Work Plan.
- Well construction data, location map, and field data from last sampling event.
- Field logbook and Field Record of Well Gauging, Purging, and Sampling forms (Figure SOP048-1).
- Electric water level measuring device, 0.01 ft accuracy for monitoring water level during pumping operations.
- Pumps: adjustable rate, submersible pumps constructed of stainless steel and Teflon®.
- Tubing: Teflon or Teflon-lined polyethylene must be used to collect samples for organic analysis. For samples collected for inorganics analysis, Teflon or Teflon-lined polyethylene tubing will be used.
- Flow measurement supplies (e.g., graduated cylinder and stop watch).
- Power source (generator, etc.).
- Water quality indicator parameter monitoring instruments—pH, turbidity, specific conductance, and temperature. Optional indicators—Eh and dissolved oxygen.
- Flow-through cell (preferred) or clean container for water quality probes.
- Decontamination supplies (for monitoring instrumentation).
- Sample bottles and sample preservation supplies (as required by the analytical methods).
- Sample tags or labels.
- Cooler with bagged ice for sample bottles.
- Drum for purge water containment.

ED_004144A_00000101-00778

1.3 PRELIMINARY SITE ACTIVITIES

The following site activities are required prior to performing well purging and groundwater sampling. Field logbooks and sampling forms should be filled out as the procedure is being performed, as noted:

- Enter the following information in the field logbook and sampling form, as appropriate: site name, project number, field personnel, well identification, weather conditions, date and time, equipment used, and quality assurance/quality control data for field instrumentation.

- Check well for damage or evidence of tampering, record pertinent observations in field logbook and sampling form.

- Lay out sheet of polyethylene for monitoring and sampling equipment.

- Unlock well and remove well cap (if applicable).

- Measure VOCs with an ionization detector (flame or photo) instrument at the rim of the well and in the breathing zone, and record the readings in the field logbook and the sampling form.

- Measure and record the height of protective casing above the concrete pad or ground surface, as appropriate. This reading is compared to that recorded during well installation as an indication of possible well damage or settling that may have occurred.

- Dedicated sampling pumps should be positioned with the pump intake mid-point in the screened interval. If non-dedicated equipment is used, care will be taken to position pump or sampling hose intake at the screen mid-point.

- Measure and record the depth to water (to 0.01 ft) in the well to be sampled before purging begins. If the well casing does not have a reference point (usually a v-cut or indelible mark in the well casing), make one. If a reference point is made, it will be noted in the field logbook. Care should be taken to minimize disturbance of any particulate attached to the sides or at the bottom of the well. The depth to well bottom will be measured following the completion of sampling because of the potential to stir up sediment at the bottom of the well.

- Prepare the pump by checking electrical connections, discharge tubing, and motor (Grundfos Redi-Flo2). Locate the generator (if applicable) downwind of the well; connect the power converter to the generator and to the pump.

ED_004144A_00000101-00779

1.4 WELL PURGING AND SAMPLING PROCEDURE

The following general procedure should be followed to obtain representative groundwater samples. Field logbooks and sampling forms should be filled out as the procedure is being performed, as noted:

- Enter the following information in the field logbook and sampling form, as appropriate, prior to purging: purge date and time, purge method, and total well depth.

- Connect the flow-through cell or clean container containing the instrumentation header to the pump discharge and begin purging the well at 0.2-0.5 L/min, unless a different purge rate has been previously established for that well. Fill the flow cell completely. Care should be taken not to cause entrapment of air in the system. Record the purge start time and purge rate.

- Establish that the water level has not dropped significantly such that the pump is dry (bubbles in discharge) or water is heard cascading down the inside of the well. Ideally, the pump rate should cause little or no water level drawdown in the well (>0.5 ft and the water level should stabilize). The water level should be monitored every 3-5 minutes (or as appropriate) during pumping. Record pumping rate adjustments and depths to water. Pumping rates should, if needed, be reduced to the minimum capabilities of the pump (e.g., 0.1-0.2 L/min) to avoid pumping the well dry and/or to ensure stabilization of indicator parameters. If water levels continue to drop with the pump on the lowest flow rate, the pump will be shut off and the well will be allowed to recharge to prevent the well from going dry. **The well will not be purged to dryness prior to sampling to prevent erroneous field parameters and groundwater samples.** Sampling will commence as soon as the well has recharged to a sufficient level to collect the appropriate volume of samples with the pump.

- During purging of the well, monitor the water quality indicator parameters (turbidity, temperature, specific conductance, pH, etc.) every 3-5 minutes (or as appropriate). Record purge rate, volume purged, depth to water, water quality indicator parameters values, and clock time at 3- to 5-minute intervals in field logbook and sampling record. Purging of the standing well water is considered complete when three consecutive readings of the water quality indicator parameters agree within approximately 10 percent. Turbidity readings consistently below 10 nephelometric turbidity units (NTU) are considered to represent stabilization of discharge water for this parameter. If the parameters have stabilized, but the turbidity is not in the range of the 10 NTU goal, the pump flow rate should be decreased and measurement of the parameters should continue every 3-5 minutes.

- Purge water at a well will be containerized if a well has exceeded the MEG or MCL in previous sampling events. Any purge water that is collected will be treated at the groundwater treatment plant.

ED_004144A_00000101-00780

- Prior to sampling, disconnect the discharge tubing from the flow-through cell. If the water discharged by the pump is silty, wait for the water to clear before sampling. Ensure that bubbles are not observed in the discharge tubing. Record pertinent observations in field logbook and sampling records.

- Begin filling sample containers by allowing the pump discharge to flow gently down the inside of the container with as little agitation or aeration as possible. Collect the samples in the order below, as applicable:

  — VOCs
  — Inorganics.

- VOC samples requiring pH adjustment will have their pH checked to assure that the proper pH has been obtained. This will require that a test sample be collected to determine the amount of preservative that needs to be added to the sample containers prior to sampling. Details on sample preservation are discussed in Section 1.5.

- Label each sample as collected. Those samples (VOCs, etc.) requiring cooling will be placed into an ice cooler for delivery to the laboratory. Inorganic samples, after preservation, do not need to be cooled.

- After collection of the samples, restore the dedicated pumping assembly to the well by hanging the tube, electric line, and support cable inside the well by the specially-designed PVC well cap assembly. Lock well.

- Complete remaining portions of Field Record of Well Gauging, Purging, and Sampling form (Figure SOP048-1) after each well is sampled, including sample date and time, total quantity of water removed, well sampling sequence, types of sample bottles used, sample identification numbers, preservatives used, parameters requested for analysis, and field observations of sampling event.

1.5 SAMPLE PRESERVATION

The following preservation procedures are examples of typical preservation protocols specific to the indicated analyses. Pre-preserved bottles will be used if possible. Minimum sample preservation requirements for each parameter group are summarized below:

- **VOCs**—Aqueous VOC samples must be collected as specified below. Each VOC sample is taken in duplicate:

  — Uncap the sample bottle, taking care not to touch the Teflon-faced septum. If the septum is contaminated in any way, it should be replaced.

  — Fill a sample bottle, preserve with HC1, and check the pH. Adjust the volume of HC1 to assure pH<2.

ED_004144A_00000101-00781

— Add the amount of HC1 determined in the above step, and fill the sample vial slowly from the tubing, minimizing air entrainment, until the vial slightly overflows.

— Place the Teflon-faced silicon rubber septum on the convex meniscus, Teflon side (shiny side) down and screw cap on.

— Invert the bottle, tap lightly, and check for air bubbles.

— If air bubbles are present, open the bottle, add sample to eliminate air bubbles, and reseal. Repeat this procedure until the bottle is filled and no air bubbles are detected.

— Place samples on ice until shipment.

- **Inorganics**—Fill the sample bottle, preserve the sample to pH<2 with nitric acid (HNO_3), seal container, and place sample on ice for shipment.

Disposable pipettes should be used to introduce chemicals into the samples if necessary. Chemicals used for preserving should be poured into a 150-ml beaker. They should not be drawn directly from the preservative bottles because the bottle may become contaminated. Measurements for pH and temperature should not be taken from the sample containers. When preserving samples to a required pH, pH paper should be used to check the resultant pH. The sample should be poured across the pH paper. Never place pH paper directly into sample.

NOTE: Shipping regulations limit the amount of preservative which can be added. For a 1-L sample, this is generally 1.5 ml of acid preservative.

1.6 FIELD QUALITY CONTROL

Quality control samples are required to verify that the sample collection and handling process has not affected the quality of the groundwater samples. All field quality control samples must be prepared exactly as regular investigation samples with regard to sample volume, containers, and preservation. The following quality control samples will be collected for each sample delivery group (SDG) (an SDG may not exceed 20 samples) at the frequency noted:

- Field Duplicate—Required at a frequency of 10 percent per SDG.
- Matrix Spike/Matrix Spike Duplicate—Required at a frequency of 5 percent.
- Equipment Rinsate Blank—Required once prior to installation of dedicated pump systems.
- Source Water Blank—Required at a frequency of once per source per sampling event when equipment (rinsate) blank is required.
- Trip Blank—Required for VOC samples at a frequency of one per sample shipment.

ED_004144A_00000101-00782

1.7 DECONTAMINATION

Non-dedicated sampling equipment and field monitoring equipment will be decontaminated prior to use and following sampling of each well. This equipment will be decontaminated by the procedure listed below. Alternative procedures must be approved by the Project Manager prior to sampling event. Decontamination fluids will be collected in a 5-gal bucket and treated at the groundwater treatment plant.

The following decontamination procedure will be used:

- Flush the equipment with potable water
- Flush with non-phosphate detergent solution
- Flush with tap water to remove all of the detergent solution
- Flush with distilled/deionized water
- Flush with isopropyl alcohol
- Flush with distilled/deionized water.

It is recommended that the detergent and isopropyl alcohol used in the above sequence be used sparingly.

2. GROUNDWATER SAMPLING BY LOW-FLOW PURGE AND SAMPLING METHOD USING PERISTALTIC PUMPS

2.1 SCOPE OF APPLICATION

The purpose of this SOP is to establish the protocol for collecting groundwater samples using peristaltic pump systems. The procedure is designed to permit the collection of groundwater samples with minimum turbidity, and is intended to be used in conjunction with the analyses for the most common types of groundwater contaminants (VOCs and inorganic compounds).

2.2 EQUIPMENT/MATERIALS

- Work Plan.
- Well construction data, location map, field data from last sampling event.
- Field logbook and Field Record of Well Gauging, Purging, and Sampling forms (Figure SOP048-1).
- Water level measuring device, 0.01 ft accuracy (electronic preferred) for monitoring water level drawdown during pumping operations.
- Peristaltic pump.

ED_004144A_00000101-00783

- In-well tubing: Teflon or Teflon-lined polyethylene must be used to collect samples for organic analysis. For samples collected for inorganics analysis, Teflon or Teflon-lined polyethylene, PVC, Tygon, or polyethylene tubing may be used.
- Pump head tubing: Silicon tubing must be used to in the pump head assembly.
- Flow measurement supplies (e.g., graduated cylinder and stop watch).
- Power source (battery, etc.).
- Water quality indicator parameter monitoring instruments – pH, turbidity, specific conductance, and temperature. Optional indicators – Eh and dissolved oxygen.
- Flow-through cell (preferred) or clean container for water quality probe.
- Decontamination supplies (for monitoring instrumentation).
- Sample bottles and sample preservation supplies (as required by the analytical methods).
- Sample tags or labels.
- Cooler with bagged ice for sample bottles.
- Drum for purge water containment.

2.3 PRELIMINARY SITE ACTIVITIES

The following site activities are required prior to performing well purging and groundwater sampling. Field logbooks and sampling forms should be filled out as the procedure is being performed, as noted:

- Enter the following information in the field logbook and sampling form, as appropriate: site name, project number, field personnel, well identification, weather conditions, date and time, equipment used, and quality assurance/quality control data for field instrumentation.
- Check well for damage or evidence of tampering, record pertinent observations in field logbook and sampling form.
- Unlock well and remove well cap (if applicable).
- Measure VOCs with an ionization detector (photo or flame) instrument at the rim of the well and in the breathing zone and record the readings in the field logbook and the sampling form.

ED_004144A_00000101-00784

- Measure and record the height of protective casing above the concrete pad, or ground surface, as appropriate. This reading is compared to that recorded during well installation as an indication of possible well damage or settling that may have occurred.

- Measure and record the depth to water (to 0.01 ft) in the well to be sampled before purging begins. If the well casing does not have a reference point (usually a v-cut or indelible mark in the well casing), make one. If a reference point is made, it will be noted in the field logbook. Care should be taken to minimize disturbance of any particulate attached to the sides or at the bottom of the well. The depth to well bottom will not be measured following the completion of sampling because of the potential to stir up sediment at the bottom of the well.

- Position the intake of the sampling hose at the mid-point of the screened interval.

- Prepare the pump by checking electrical connections and discharge tubing. Locate the battery downwind of the well; connect the peristaltic pump to the battery.

2.4 WELL PURGING AND SAMPLING PROCEDURES

The following general procedure should be followed to obtain representative groundwater samples. Field logbooks and sampling forms should be filled out as the procedure is being performed, as noted:

- Enter the following information in the field logbook and sampling form, as appropriate, prior to purging: purge date and time, purge method, and total well depth.

- Measure the water level with the pump in well before starting the pump. Begin purging the well at 0.3-0.5 L/min, unless a different purge rate has been previously established for that well.

- If well diameter permits, establish that the water level has not dropped significantly such that the pump is dry (air in discharge) or tubing suction is broken. Ideally, the pump rate should cause little or no water level drawdown in the well (>0.5 ft and the water level should stabilize). The water level should be monitored every 3-5 minutes (or as appropriate) during pumping. Care should be taken not to cause pump suction to be broken, or entrainment of air in the pump system. Record pumping rate adjustments and depths to water. Pumping rates should, if needed, be reduced to the minimum capabilities of the pump (e.g., 0.3 L/min) to avoid pumping the well dry and/or to ensure stabilization of indicator parameters. If water levels continue to drop with the pump on the lowest flow rate, the pump will be shut off and the well will be allowed to recharge to prevent the well from going dry. **The well will not be purged to dryness prior to sampling to prevent erroneous field parameters and groundwater samples.** Sampling will commence as soon as the well has recharged to a sufficient level to collected the appropriate volume of samples with the pump.

ED_004144A_00000101-00785

- During purging of the well, monitor the field indicator parameters (turbidity, temperature, specific conductance, pH, etc.) every 3-5 minutes (or as appropriate). Purging of the standing well water is considered complete when three consecutive readings of the water quality indicator parameters agree within approximately 10 percent. Turbidity readings consistently below 10 NTU are considered to represent stabilization of discharge water for this parameter. If the parameters have stabilized, but the turbidity is not in the range of the 10 NTU goal, the pump flow rate should be decreased and measurement of the parameters should continue every 3-5 minutes.

- Purge water at a well will be containerized if a well has exceeded the MEG or MCL in previous sampling events. Any purge water that is collected will be treated at the groundwater treatment plant.

- Prior to sampling, disconnect the sample discharge tubing from the flow-through cell. If the water discharged by the pump is silty, wait for the water to clear before sampling. Ensure that bubbles are not observed in the discharge tubing.

- Collect groundwater samples directly from the silicon tubing into preserved (when appropriate) sample containers. Begin filling sample containers from the pump discharge, allowing the water to fill the containers by allowing the pump discharge to flow gently down the inside of the container with as little agitation or aeration as possible. Collect the samples in the order below, as applicable:

  — VOCs
  — Inorganics.

- VOC samples requiring pH adjustment will have their pH checked to assure that the proper pH has been obtained. This will require that a test sample be collected to determine the amount of preservative that needs to be added to the sample containers prior to sampling. Detail on sample preservation are discussed in Section 2.5.

- Label each sample as collected. Those samples (VOCs, etc.) requiring cooling will be placed into an ice cooler for delivery to the laboratory. Inorganic samples, after preservation, do not need to be cooled.

- After collection of the samples, restore the dedicated tubing assembly to the well by hanging the tube inside the well by the specially-designed PVC well cap assembly. Lock well.

- Complete remaining portions of Field Record of Well Gauging, Purging, and Sampling form (Figure SOP048-1) after each well is sampled, including: sample date and time, total quantity of water removed, well sampling sequence, types of sample bottles used, sample identification numbers, preservatives used, parameters requested for analysis, and field observations of sampling event.

ED_004144A_00000101-00786

- The silicon tubing used in the peristaltic pump will be changed after use at each well.

2.5 SAMPLE PRESERVATION

The following preservation procedures are examples of typical preservation protocols specific to the indicated analyses. Pre-preserved bottles will be used if possible. Minimum sample preservation requirements for each parameter group are summarized below:

- **VOCs**—Aqueous VOC samples must be collected as specified below. Each VOC sample is taken in duplicate:

  — Uncap the sample bottle, taking care not to touch the Teflon-faced septum. If the septum is contaminated in any way, it should be replaced.

  — Fill a sample bottle, preserve with HCL, and check the pH. Adjust the volume of HCL to assure pH<2.

  — Add the amount of HCL determined in the above step, and fill the sample vial slowly from the tubing, minimizing air entrainment, until the vial slightly overflows.

  — Place the Teflon-faced silicon rubber septum on the convex meniscus, Teflon side (shiny side) down, and screw cap on.

  — Invert the bottle, tap lightly, and check for air bubbles.

  — If air bubbles are present, open the bottle, add sample to eliminate air bubbles, and reseal. Repeat this procedure until the bottle is filled and no air bubbles are detected.

  — Place samples on ice until shipment.

- **Inorganics**—Fill the sample bottle, preserve the sample to pH<2 with nitric acid (HNO_3), seal container, and place sample on ice for shipment.

Disposable pipettes should be used to introduce chemicals into the samples if necessary. Chemicals used for preserving should be poured into a 150-ml beaker. They should not be drawn directly from the preservative bottles because the bottle may become contaminated. Measurements for pH and temperature should not be taken from the sample containers. When preserving samples to a required pH, pH paper should be used to check the resultant pH. The sample should be poured across the pH paper. Never place pH paper directly into sample.

NOTE: Shipping regulations limit the amount of preservative which can be added. For a 1-L sample, this is generally 1.5 ml of acid preservative.

ED_004144A_00000101-00787

2.6 FIELD QUALITY CONTROL

Quality control samples are required to verify that the sample collection and handling process has not affected the quality of the groundwater samples. All field quality control samples must be prepared exactly as regular investigation samples with regard to sample volume, containers, and preservation. The following quality control samples will be collected for each SDG (an SDG may not exceed 20 samples) at the frequency noted:

- Field Duplicate—Required at a frequency of 10 percent per SDG
- Matrix Spike/Matrix Spike Duplicate—Required at a frequency of 5 percent
- Equipment (Rinsate) Blank—Required once prior to installation of dedicated sample tubing
- Source Water Blank—Required at a frequency of one per source per sampling event
- Trip Blank—Required for VOC samples at a frequency of one per sample shipment.
- Temperature Blank—Required at a frequency of once per sample shipment container.

2.7 DECONTAMINATION

Non-dedicated sampling and field monitoring equipment will be decontaminated prior to use and following sampling of each well. This equipment will be decontaminated by the procedure listed below. Alternate procedures must be approved by the Project Manager prior to the sampling event. Decontamination fluids will be collected in a 5-gal bucket and treated at the groundwater treatment plant.

The following decontamination procedure will be used:

- Flush the equipment with potable water
- Flush with non-phosphate detergent solution
- Flush with tap water to remove all of the detergent solution
- Flush with distilled/deionized water
- Flush with isopropyl alcohol
- Flush with distilled/deionized water.

It is recommended that the detergent and isopropyl alcohol used in the above sequence be used sparingly.

ED_004144A_00000101-00788

3. SURFACE WATER AND LEACHATE SEEP SAMPLING PROCEDURE

3.1 SCOPE OF APPLICATION

The purpose of this SOP is to establish the protocol for collecting surface water and leachate seep samples. The procedure is designed to permit the collection of representative surface water and leachate seep samples, and has been adapted from the procedure outlined in the Work Plan. This SOP is suitable for collecting surface water and seep samples requiring analyses for the most common types of surface water contaminants (VOCs and inorganic compounds).

3.2 EQUIPMENT/MATERIALS

- Work Plan.
- Location map, field data from last sampling event.
- Field logbook and Field Record of Surface Water and Sediment Sampling forms (Figure SOP048-2).
- Water quality indicator parameter monitoring instruments – pH, turbidity, specific conductance, and temperature. Optional indicators – Eh and dissolved oxygen.
- Decontamination supplies (for monitoring instrumentation).
- Dedicated, pre-cleaned 1-L wide-mouth or volatile organic analyte sample container (for sample collection).
- Sample bottles and sample preservation supplies (as required by the analytical methods).
- Sample tags or labels.
- Cooler with bagged ice for sample bottles.

3.3 PRELIMINARY SITE ACTIVITIES

The following site activities are required prior to performing surface water or leachate seep sampling. Field logbooks and sampling forms should be filled out as the procedure is being performed, as noted:

- Enter the following information in the field logbook and sampling form, as appropriate: site name, project number, field personnel, sample station identification, weather conditions, date and time, equipment used, and quality assurance/quality control data for field instrumentation.

ED_004144A_00000101-00789

- Visually inspect sample station for evidence of changes in physical condition; record pertinent observations in field logbook and sampling form.

- Measure VOCs with a flame ionization detector instrument in the breathing zone and record the reading in the field logbook and sampling form.

3.4 SAMPLING PROCEDURE

The technique for surface water and leachate seep sampling must be selected after addressing such items as:

- Depth of waterbody
- Depth of sample
- Stratification
- Seasonal variations
- Analytical parameters of interest.

The following general procedure should be used to obtain representative surface water and leachate seep samples. Field logbooks and sampling forms should be filled out as the procedure is being performed, as noted:

- Enter the following information in the field logbook and sampling form, as appropriate, prior to sampling: date and time, sample method, and sample depth.

- Collect the sample from the surface water, within several tenths of a foot of the streambed, by immersing a new, dedicated 1-L glass or volatile organic analyte sample container into the waterbody. If a stream is being sampled, collect the sample upstream of the sampler with the opening of the sampling device oriented upstream but avoiding floating debris.

- Directly fill the appropriate sample containers from the 1-L or volatile organic analyte sampling device.

- Collect the samples in the order below, as applicable:

  — VOCs
  — Inorganics.

- Water sample containers are generally filled directly from the source or sampler without special considerations. The exception is the collection of aqueous VOC samples requiring pH adjustment. VOC samples will have their pH checked to assure that the proper pH has been obtained. This will require that a test sample be collected to determine the amount of preservative that needs to be added to the sample containers prior to sampling. Details on sample preservation methods are discussed in Section 3.6.

ED_004144A_00000101-00790

- Label each sample as collected. Those samples (VOCs, etc.) requiring cooling will be placed into an ice cooler for delivery to the laboratory. Inorganic samples, after preservation, do not need to be cooled.

- Measure water quality indicator parameters, if possible, by direct immersion of instrument probes into the waterbody immediately following sample collection. If direct measurement is not possible, measure these parameters from water remaining in the sampling device or another sample bottle. Record this information in the field logbook and sample data record.

- Complete remaining portions of the Field Record of Surface Water and Sediment Sampling form (Figure SOP048-2) after each station is sampled, including: time of sample collection, types of sample bottles used, sample identification numbers, preservatives used, parameters requested for analysis, and field observations of sampling event.

3.5 SAMPLE PRESERVATION

The following preservation procedures are examples of typical preservation protocols specific to the indicated analyses. Minimum sample preservation requirements for each parameter group are summarized below:

- **VOCs**—Aqueous VOC samples must be collected as specified below. Each sample is taken in duplicate:

  — Uncap the sample bottle, taking care not to touch the Teflon-faced septum. If the septum is contaminated in any way, it should be replaced.

  — Fill a sample bottle, preserve with HC1, and check the pH. Adjust the volume of HC1 to assure pH<2.

  — Add the amount of HC1 determined in the above step, and fill the sample vial slowly from the 1-L container, minimizing air entrainment, until the vial slightly overflows.

  — Place the Teflon-faced silicon rubber septum on the convex meniscus, Teflon side (shiny side) down and screw cap on.

  — Invert the bottle, tap lightly, and check for air bubbles.

  — If air bubbles are present, open the bottle, add sample to eliminate air bubbles, and reseal. Repeat this procedure until the bottle is filled and no air bubbles are detected.

  — Place samples on ice until shipment.

ED_004144A_00000101-00791

- **Inorganics**—Fill the sample bottle, preserve the sample to pH<2 with nitric acid (HNO_3), seal container, and place sample on ice for shipment.

Disposable pipettes should be used to introduce chemicals into the samples. Chemicals used for preserving should be poured into a 150-ml beaker. They should not be drawn directly from the preservative bottles because the bottle may become contaminated. Measurements for pH and temperature should not be taken from the sample containers. When preserving samples to a required pH, pH paper should be used to check the resultant pH. The sample should be poured across the pH paper. Never place pH paper directly into sample.

NOTE: Shipping regulations limit the amount of preservative which can be added. For a 1-L sample, this is generally 1.5 ml of acid preservative.

3.6 FIELD QUALITY CONTROL

Quality control samples are required to verify that the sample collection and handling process has not affected the quality of the surface water and leachate seep samples. All field quality control samples must be prepared exactly as regular investigation samples with regard to sample volume, containers, and preservation. The following quality control samples will be collected for each SDG (an SDG may not exceed 20 samples) at the frequency noted:

- Field Duplicate—Required at a frequency of 10 percent per SDG.
- Matrix Spike/Matrix Spike Duplicate—Required at a frequency of 5 percent.
- Equipment (Rinsate) Blank—Required at a frequency of once per day per media sampled.
- Source Water Blank—Required at a frequency of once per source per sampling event when equipment (rinsate) blank is required.
- Trip Blank—Required for VOC samples at a frequency of one per sample shipment.

3.7 DECONTAMINATION

Field monitoring equipment will be decontaminated prior to use and following sampling of each station by the procedure listed below. Laboratory pre-cleaned, dedicated 1-L glass sample collection containers are used once and discarded and, therefore, do not undergo any decontamination. Decontamination fluids will be collected in a 5-gal bucket and treated at the groundwater treatment plant.

ED_004144A_00000101-00792

The following decontamination procedure will be used:

- Flush the equipment with potable water
- Flush with non-phosphate detergent solution
- Flush with tap water to remove all of the detergent solution
- Flush with distilled/deionized water
- Flush with isopropyl alcohol
- Flush with distilled/deionized water.

It is recommended that the detergent and isopropyl alcohol used in the above sequence be used sparingly.

4. REFERENCES

U.S. Environmental Protection Agency. 1996. Groundwater Issue-Low Flow Sampling (Minimal Drawdown) Groundwater Sampling Procedures. April.

ED_004144A_00000101-00793

FIELD RECORD OF WELL GAUGING, PURGING, AND SAMPLING

Site Name:		Project Number:	
Well ID:		Well Lock Status:	
Well Condition:		Weather:	

Gauge Date:		Gauge Time:	
Sounding Method:		Measurement Ref:	
Stick Up/Down (ft):		Well Diameter (in.):	

Purge Date:		Purge Time:	
Purge Method:		Field Personnel:	
Ambient Air VOCs (ppm):		Well Mouth VOCs (ppm):	

WELL VOLUME

A. Well Depth (ft):		D. Well Volume/ft (L):	
B. Depth to Water (ft):		E. Well Volume (L) (C*D):	
C. Liquid Depth (ft) (A-B)		F. Three Well Volumes (L) (E*3):	

G. Measurable LNAPL? Yes _____ /ft No _____

Parameter	Beginning	1	2	3	4	5
Time (min.)						
Depth to Water (ft)						
Purge Rate (L/min)						
Volume Purged (L)						
pH						
Temperature (°C)						
Conductivity (µmhos/cm)						
Dissolved Oxygen (mg/L)						
Turbidity (NTU)						
eH (mV)						

Total Quantity of Water Removed (L):			
Samplers:		Sampling Time (Start/End):	
Sampling Date:		Decontamination Fluids Used:	
Sample Type:		Sample Preservatives:	
Sample Bottle IDs:			
Sample Parameters:			

Figure SOP048-1.

FIELD RECORD OF WELL GAUGING, PURGING, AND SAMPLING

Site Name:	Project Number:	Date:
Well ID:	Field Personnel:	

Parameter	6	7	8	9	10	11
Time (min.)						
Depth to Water (ft)						
Purge Rate (L/min)						
Volume Purged (L)						
pH						
Temperature (°C)						
Conductivity (µmhos/cm)						
Dissolved Oxygen (mg/L)						
Turbidity (NTU)						
eH (mV)						

Parameter	12	13	14	15	16	17
Time (min.)						
Depth to Water (ft)						
Purge Rate (L/min)						
Volume Purged (L)						
pH						
Temperature (°C)						
Conductivity (µmhos/cm)						
Dissolved Oxygen (mg/L)						
Turbidity (NTU)						
eH (mV)						

Comments and Observations:

Figure SOP048-1.

FIELD RECORD OF SURFACE WATER AND SEDIMENT SAMPLING

Site Name:			Project Number:
Sample Location ID:			Date:
Time:	Start:	End:	Sample Team Members:

SURFACE WATER INFORMATION

Type of Surface Water:
( ) Stream ( ) River
( ) Pond/Lake ( ) Seep

Water Depth and Sample Location _____ (ft)

Depth of Sample from Top of Water _____ (ft)

Equipment Used for Collection:
( ) None, Grab into Bottle
( ) Bomb Sampler
( ) Pump _____

Decontamination Fluids Used:
( ) Isopropyl Alcohol
( ) ASTM Type II Water
( ) Deionized Water
( ) Liquinox Solution
( ) Hexane
( ) HNO_3 Solution
( ) Potable Water
( ) None

Water Quality Parameters
( ) Temperature ____
( ) Conductivity ___ µmhs/cm
( ) pH ____ units
( ) Dissolved oxygen ____ mg/L
( ) Turbidity ____ NTU
( ) Eh ____ mv

Velocity Measurements Obtained? ( ) No ( ) Yes, See Flow Measurement Data Record

Field QC Data: ( ) Used:
Duplicate ID _____
( ) MS/MSD

Field Duplicate Collected
( ) Yes
( ) No

Sample Location Sketch:
( ) Winkler
( ) Probe

Method

SEDIMENT INFORMATION

Type of Sample Collected:
( ) Discrete
( ) Composite

Sediment Type:
( ) Clay
( ) Sand
( ) Organic
( ) Gravel

Equipment Used for Collection:
( ) Gravity Corer
( ) Stainless Steel Split Spoon
( ) Dredge
( ) Hand Spoon/Trowel
( ) Aluminum Pans
( ) Stainless Steel Bucket
( ) _____

Decontamination Fluids Used:
( ) Isopropyl Alcohol
( ) ASTM Type II Water
( ) Deionized Water
( ) Liquinox Solution
( ) Hexane
( ) HNO_3 Solution
( ) Potable Water
( ) None

Sample Observations:
( ) Odor _____
( ) Color

Field QC Data: ( ) Field Duplicate Collected ( ) MS/MSD
Duplicate ID _____

SAMPLES COLLECTED

Check if Required at this Location	Matrix		Check if Preserved with Acid/Base	Volume Required	Check if Sample Collected	Sample Bottle IDs			
	Surface Water	Sediment							

NOTES/SKETCH

Figure SOP048-2.

This page intentionally left blank

Standard Operating Procedure No. 051
for
Low Flow Purge and
Sampling with Dedicated Pumps

Prepared by

EA Engineering, Science, and Technology, Inc., PBC
225 Schilling Circle, Suite 400
Hunt Valley, Maryland 21031

Revision: 1
December 2014

This page intentionally left blank

CONTENTS

Page

1. SCOPE OF APPLICATION 1
2. EQUIPMENT/MATERIALS 1
3. PRELIMINARY SITE ACTIVITIES 2
4. SAMPLING PROCEDURE 3
5. SAMPLING PRESERVATION 4
6. FIELD QUALITY CONTROL 5
7. DECONTAMINATION 5

ED_004144A_00000101-00800

This page intentionally left blank

ED_004144A_00000101-00801

1. SCOPE OF APPLICATION

The purpose of this Standard Operating Procedure is to establish the protocol for collecting groundwater samples using dedicated pump systems. The procedure is designed to permit the collection of groundwater samples with minimum turbidity, and is intended to be used in conjunction with the analyses for the most common types of groundwater contaminants (volatile organic compounds and semivolatile organic compounds, pesticides, polychlorinated biphenyls, metals, and inorganic compounds). This Standard Operating Procedure was prepared based on draft guidance prepared by the U.S. Environmental Protection Agency Region 1 and conforms to the procedures described in the Long-Term Monitoring Plan.

2. EQUIPMENT/MATERIALS

- Long-Term Monitoring Plan.
- Well construction data, location map, and field data from last sampling event.
- Field logbook, Field Record of Well Gauging Form (Figure SOP051-1), and Field Record of Well Gauging, Purging, and Sampling Form (Figure SOP051-2).
- Electronic water level measuring device, 0.01 ft accuracy for monitoring water level during pumping operations.
- Pumps: adjustable rate, submersible pumps constructed of stainless steel and Teflon.
- Tubing: Teflon or Teflon-lined polyethylene must be used to collect samples for organic and inorganic analyses.
- Flow measurement supplies (e.g., graduated cylinder and stop watch).
- Power source (generator, etc.).
- Water quality indicator parameter monitoring instruments—pH, turbidity, specific conductances, and temperature. Optional indicators—Eh and dissolved oxygen. Water quality indicator parameters will be measured in the field in accordance with EPA-600/4-79-020 (1983) using the following methods: temperature (Method 170.1), pH (Method 150.1), turbidity (Method 180.1), specific conductance (Method 120.1), and dissolved oxygen (Method 360.1).

ED_004144A_00000101-00802

- Flow-through cell for water quality parameters.
- Decontamination supplies (for monitoring instrumentation).
- Sample bottles and sample preservation supplies (as required by the analytical methods).
- Sample tags or labels.
- Cooler with bagged ice for sample bottles.

3. PRELIMINARY SITE ACTIVITIES

The following site activities are required prior to performing well purging and groundwater sampling. Field logbooks and sampling forms should be filled out as the procedure is being performed, as noted:

- Enter the following information in the field logbook and sampling form, as appropriate: site name, project number, field personnel, well identification, weather conditions, date and time, equipment used, and quality assurance/quality control data for field instrumentation.
- Check well for damage or evidence of tampering; record pertinent observations in the field logbook and sampling form.
- Lay out sheet of polyethylene for monitoring and sampling equipment.
- Unlock well and remove well cap (if applicable).
- Measure volatile organic compounds with a photoionization detector instrument at the rim of the well and in the breathing zone, and record the readings in the field logbook and the sampling form.
- Measure and record the height of protective casing above the concrete pad or ground surface, as appropriate. This reading is compared to that recorded during well installation as an indication of possible well damage or settling that may have occurred.
- Measure and record the depth to water (to 0.01 ft) in the well to be sampled before purging begins. If the well casing does not have a reference point (usually a v-cut or indelible mark in the well casing), make one. Care should be taken to minimize disturbance of any particulate attached to the sides or at the bottom of the well. The depth to well bottom will be measured following completion of the sampling because of the potential to stir up sediment at the bottom of the well.

ED_004144A_00000101-00803

- Prepare the pump by checking electrical connections, discharge tubing, and motor (Grundfos Redi-Flo2). Locate the generator (if applicable) downwind of the well; connect the power converter to the generator and the pump.

4. SAMPLING PROCEDURE

The following general procedure should be followed to obtain representative groundwater samples. Field logbooks and sampling forms should be filled out as the procedure is being performed, as noted:

- Enter the following information in the field logbook and sampling form, as appropriate, prior to purging: purge date and time, purge method, and total well depth.

- Connect the flow-through cell containing the instrumentation header to the pump discharge and begin purging the well at 0.2-0.5 L/min, unless a different purge rate has been previously established for that well. Fill the flow-through cell completely. Care should be taken not to cause entrapment of air in the system. Record the purge start time and purge rate.

- Establish that the water level has not dropped significantly such that the pump is dry (bubbles in discharge) or water is heard cascading down the inside of the well. Ideally, the pump rate should cause little or no water level drawdown in the well (<0.5 ft and the water level should stabilize). The water level should be monitored every 3-5 minutes (or as appropriate) during pumping. Record pumping rate adjustments and depths to water. Pumping rates should, if needed, be reduced to the minimum capabilities of the pump (e.g., 0.1-0.2 L/min) to avoid pumping the well dry and/or to ensure stabilization of indicator parameters. If the water level continues to drop with the pump on the lowest flow rate, the pump will be shut off and the well allowed to recharge to prevent it from going dry. **The well will not be purged to dryness prior to sampling to prevent erroneous field parameters and groundwater samples.** Sampling will commence as soon as the well has recharged to a sufficient level to collect the appropriate volume of samples with the pump.

- During purging of the well, monitor the water quality indicator parameters, including pH, temperature, specific conductance, oxidation-reduction potential, dissolved oxygen, and turbidity, every 3-5 minutes (or as appropriate). Record purge rate, volume purged, depth to water, water quality indicator parameters values, and clock time at 3- to 5-minute intervals in the field logbook and sampling record. Purging of the standing well water is considered complete when three consecutive readings of the water quality indicator parameters agree within the following: $\pm$ 0.1 for pH, $\pm$ 3 percent for conductivity, $\pm$ 10 mV for redox potential, and $\pm$ 10 percent for turbidity and dissolved oxygen. Temperature readings should also be recorded along with the aforementioned water quality indicators. Although it is not critical in determining the stabilization of the discharge water, it is important for data interpretation and should also be measured.

ED_004144A_00000101-00804

Additionally, turbidity readings consistently below 10 nephelometric turbidity units (NTUs) are considered to represent stabilization of discharge water for this parameter. If the parameters have stabilized but the turbidity is not in the range of the goal of 10 NTUs, the pump flow rate should be decreased and measurement of the parameters should continue every 3-5 minutes; however, it is important to note that natural turbidity levels in groundwater at some sites may exceed 10 NTUs.

- Prior to sampling, disconnect the discharge tubing from the flow-through cell. If the water discharged by the pump is silty, wait for the water to clear before sampling. Ensure that bubbles are not observed in the discharge tubing. Record pertinent observations in the field logbook and sampling records.

- The purging rate will be controlled so that the well is not purged dry before sampling. If necessary, purging will be temporarily halted to permit recharge rather than allowing the well to be purged dry.

- Begin filling sample containers from the pump discharge, allowing the water to fill the containers by allowing the pump discharge to flow gently down the inside of the container with as little agitation or aeration as possible.

- Label each sample as collected. Those samples requiring cooling will be placed into an ice cooler for delivery to the laboratory.

- After collection of the samples, restore the dedicated pumping assembly to the well by hanging the tube, electric line, and support cable inside the well by the specially-designed PVC well cap assembly. Lock well.

- Complete remaining portions of Field Record of Well Gauging, Purging, and Sampling form (Figure SOP051-2) after each well is sampled, including sample date and time, total quantity of water removed, well sampling sequence, types of sample bottles used, sample identification numbers, preservatives used, parameters requested for analysis, and field observations of sampling event.

5. SAMPLE PRESERVATION

The following preservation procedures are examples of typical preservation protocols specific to the indicated analyses. Minimum sample preservation requirements for each parameter group are summarized below and in Table 3-1 of the Quality Assurance Project Plan:

- **Pesticides and Herbicides**—Fill the sample bottle, seal with a Teflon-lined cap, and place on ice for shipment.

ED_004144A_00000101-00805

6. FIELD QUALITY CONTROL

Quality control samples are required to verify that the sample collection and handling process has not affected the quality of the groundwater samples. All field quality control samples must be prepared exactly as regular investigation samples with regard to sample volume, containers, and preservation. The following quality control samples will be collected for each sample delivery group (a sample delivery group may not exceed 20 samples) at the frequency noted:

- ***Field Duplicate***—Required at a frequency of 10 percent per sample delivery group
- ***Matrix Spike/Matrix Spike Duplicate***—Required at a frequency of 5 percent
- ***Equipment Rinsate Blank***—Required once prior to installation of dedicated pump systems
- ***Source Water Blank***—Required at a frequency of once per sampling event when equipment rinsate blank is required.
- ***Trip Blank***—Required for volatile organic compound samples at a frequency of one per sample shipment.

NOTE: The dedicated pumps remain in the wells between sampling events.

7. DECONTAMINATION

Non-dedicated sampling equipment and field monitoring equipment will be decontaminated prior to use and following sampling of each well. This equipment will be decontaminated by the procedure listed below. Alternative procedures must be approved by the Project Manager prior to sampling event. Decontamination fluids will be collected in a 5-gal bucket and treated at the groundwater treatment plant.

The following decontamination procedure will be used:

- Flush the equipment with potable water
- Flush with non-phosphate detergent solution
- Flush with tap water to remove all of the detergent solution
- Flush with distilled/deionized water
- Flush with isopropyl alcohol
- Flush with distilled/deionized water.

It is recommended that the detergent and isopropyl alcohol used in the above sequence be used sparingly.

ED_004144A_00000101-00806

This page intentionally left blank

ED_004144A_00000101-00807

Project Name:			Project No:		Date:
Weather/Temperature:					
EA Personnel:			Equipment:		
Well Number	Well Elevation	Depth to Water	Depth to LNAPL	LNAPL Thickness	Corrected Water Table Elevation[a]

(a) Based on an assumed specific gravity of 0.80 for LNAPL.

NOTE: All measurements in feet.
LNAPL = Light, non-aqueous phase liquid.

Figure SOP051-1. Field record of well gauging.

ED_004144A_00000101-00808

Site Name:		Project Number:	
Well ID:		Well Lock Status:	
Well Condition:		Weather:	

Gauge Date:		Gauge Time:	
Sounding Method:		Measurement Ref:	
Stick Up/Down (ft):		Well Diameter (in.):	

Purge Date:		Purge Time:	
Purge Method:		Field Personnel:	
Ambient Air VOCs (ppm):		Well Mouth VOCs (ppm):	

WELL VOLUME			
A. Well Depth (ft):		D. Well Volume/ft (L):	
B. Depth to Water (ft):		E. Well Volume (L) (C*D):	
C. Liquid Depth (ft) (A-B)		F. Three Well Volumes (L) (E*3):	
G. Measurable LNAPL? Yes _____ /ft No _____			

Parameter	Beginning	1	2	3	4	5
Time (min.)						
Depth to Water (ft)						
Purge Rate (L/min)						
Volume Purged (L)						
pH						
Temperature (°C)						
Conductivity (µmhos/cm)						
Dissolved Oxygen (mg/L)						
Turbidity (NTU)						
eH (mV)						

Total Quantity of Water Removed (L):			
Samplers:		Sampling Time (Start/End):	
Sampling Date:		Decontamination Fluids Used:	
Sample Type:		Sample Preservatives:	
Sample Bottle IDs:			
Sample Parameters:			

Figure SOP051-2. Field record of well gauging, purging, and sampling.

ED_004144A_00000101-00809

Standard Operating Procedure No. 054
for
Collecting Fish Tissue for Chemical Analysis

Prepared by

EA Engineering, Science, and Technology, Inc., PBC
225 Schilling Circle, Suite 400
Hunt Valley, Maryland 21031

Revision 0
December 2014

This page intentionally left blank

CONTENTS

Page

1. SCOPE AND APPLICATION 1
2. MATERIALS 1
3. COLLECTION PROCEDURE 2
4. COLLECTION PERMIT 3
5. DOCUMENTING SAMPLE LOCATION 3
6. FIELD HANDLING AND DATA COLLECTION 4
7. SAMPLE HANDLING 5
8. COMPOSITING TECHNIQUES AND RECOMMENDATIONS 6
9. SAMPLE CONTAINERS AND PRESERVATION TECHNIQUES 6
10. REFERENCES 7

ED_004144A_00000101-00812

This page intentionally left blank

ED_004144A_00000101-00813

1. SCOPE AND APPLICATION

The purpose of this Standard Operating Procedure is to delineate protocols for the collection of fish samples for tissue analysis.

2. MATERIALS

The primary instrument for collecting fish in freshwater environments is electrofishing, either by boat or by wading in a stream/shallow river. A Coffelt VVP-15 electrofishing unit will be employed at deep water locations using an 18-ft boat platform. In shallow depths where a smaller electrofishing unit is necessary, a Smith-Root 1.5 KVA unit mounted in a 14-ft Jon boat will be used. For streams and small rivers where wading is possible, a Coffelt portable backpack electrofishing unit will be utilized. The electrofishing units will be used in the pulsed DC mode. Other equipment used in fish collection studies may include:

- Hand nets (dip nets)
- Global Positioning System unit (for marking collection areas or navigating to previously sampled locations)
- Glass or polytetrafluoroethylene (PTFE) cutting board
- Stainless-steel filet knife
- Aluminum foil
- Large zip-lock bags
- Indelible markers
- Sample labels
- Project Scope of Work, Site Safety and Health Plan, and this *Standard Operating Procedure for Fish Tissue Analysis*
- *EPA Guidance for Assessing Chemical Contamination Data for Use in Fish Advisories Volume 1 Fish Sampling and Analysis – Third Edition (November)* (EPA 823-B-00-007) (U.S. Environmental Protection Agency [EPA] 2000)
- Copy of Scientific Collection Permit
- Location map

ED_004144A_00000101-00814

- Field notebook and datasheets
- Chain-of-custody (COC) form(s)
- Coolers and ice
- Live well and aerator
- Appropriate weight measurement device
- Appropriate length measuring device
- Scissors and pliers to cut fish spines
- Deionized water
- Nitric acid solution.

Supplemental gear may be employed, if necessary, to catch target fish species. These may include seine net, gill net, Fyke net, jug line, or rod and reel.

In marine environments (salt water with high conductivity), electrofishing is not used since the conductivity carries the electric current around the fish. In marine fish tissue surveys, other gear is employed. This may include gill nets, seine nets, jug lines, or rod and reels.

3. COLLECTION PROCEDURE

The purpose of this section is to provide a broad description of selected methods of collection so that there are several routes by which to obtain field samples.

The primary method for fish collections will be boat electrofishing. This method is effective at collecting all trophic levels of fish to be analyzed at each of the selected locations, while reducing negative impacts to non-targeted fauna. The boat operator will move the boat slowly through likely fish habitat, including areas providing cover (e.g., snags, submerged aquatic vegetation, and other forms of structure). The primary collector stands on the bow of the boat and initiates the electric current using a "deadman's" switch foot peddle and collects stunned fish using a long-handled dip net. The duration of the current can be adjusted by the collector based on the number of stunned fish observed and the rate at which they recover and escape. The second collector will stand in the mid-section of the boat using a dip net to capture fish drifting past the boat.

ED_004144A_00000101-00815

In order to assess the relative availability of target species versus the need to consider targets of opportunity, all stunned fish captured will be placed in live wells; the water will be refreshed periodically to minimize stress to the captured fish resulting from depletion of dissolved oxygen. At such a point when it becomes clear that target species are available in adequate numbers to meet the sample quotas, only target species will be captured and held.

4. COLLECTION PERMIT

Permission is required to conduct these studies, and approval must be granted by the regulatory authority within the state where the study will be conducted. A Scientific Collection Permit must be applied for and the study plan approved by the proper agency or agencies prior to initiating the study.

5. DOCUMENTING SAMPLE LOCATION

The location of samples will be noted in a field notebook and on a map used in the field. Coordinates will be obtained using a hand-held Global Positioning System and recorded in the field notebook. Fish collection efforts are conducted over a general area that is sampled; therefore, specific coordinates collected will relate to the approximate center point of the collection effort for a specific location. The location should also be marked on a field map relative to a position on the shoreline. Significant events, observations, and measurements during the field investigation will also be recorded in the field notebook.

Field notebook entries will include, at a minimum, the following information:

- Author, date and time of entry (use 24-hour military time), and physical/environmental conditions during the field activity.
- Names and titles of field crew.
- Names and titles of any site visitors.
- Type of sampling activity.
- Location of sampling activity, sampling time, water temperature, dissolved oxygen, conductivity, and pH.
- Field observations.

ED_004144A_00000101-00816

- For each submitted fish sample, the number of fish included, and the species name, weight, and size of each fillet, whole body, or other appropriate measures included in the composite analytical sample. Also, whole body characteristics should be included for each fish fillet collected

- Any deformities (lesions, sores, etc.) observed on any of the fish.

- Analyses to be performed on these fish samples.

- If any page is not completely filled in, a line should be drawn through the unused portion and initialed by the person keeping the log.

- Decontamination procedures.

- Documentation of any deviations from the Field Sampling Plan.

- Unusual incidents or accidents.

Original data recorded in these field notebooks, field data sheets, sample labels, or COCs should be made using indelible dark blue or black ink. None of these documents will be destroyed or discarded, even if they are illegible or contain inaccuracies.

If an error is made on any of these documents, the error will be corrected by crossing a line through the error and entering the correct information, then initialing and dating the cross-out. Any subsequent error discovered on one of these documents will be corrected by the person who made the entry, and will be initialed and dated as appropriate.

Photographs will be taken of field activities. Each photograph will have an entry in the field logbook indicating the location, date, and time it was taken. Photographs of activities such as biota sampling locations will be taken to record activities.

6. FIELD HANDLING AND DATA COLLECTION

Individual fish used for a sample will be measured for total length and weighed. Each fish will be rinsed with water to remove any sediment or detritus and inspected for anomalies and the information recorded in the field notebook and representative datasheet if applicable. Targeted species that will be used for sample preparation will be evaluated for their suitability as part of a composite sample.

Sample preparation will be specific to the laboratory conducting the tissue analysis. Selected specimens will be either wrapped in aluminum foil and bagged plastic bags or bagged in plastic bags. All samples will be labeled with sample number, location, number of fish in composite, date, taxa, initials of the sampling crew, and disposition (i.e., fillet or whole body) and placed in

ED_004144A_00000101-00817

a cooler of ice. At the end of each day, fish will be processed (be it filleted or whole body), composited, and either frozen and held for shipping at a later date or shipped to the laboratory immediately.

A composite sample will consist of 3-5 fish collected at a specific location and of a specific trophic level (predator, bottom feeder). All information regarding sample contents will be recorded in the field notebook and a representative datasheet.

7. SAMPLE HANDLING

If the project study plan specifies fillets, then samples of target species will be cut either by the field crew at the end of each day or, if preferred, by the analytical laboratory. This decision will be dictated by the laboratory prior to the initiation of the field sampling effort. Fillet samples will be prepared according to the *EPA Guidance for Assessing Chemical Contamination Data for Use in Fish Advisories Volume 1 Fish Sampling and Analysis – Third Edition (November)* (EPA 823-B-00-007) (EPA 2000).

Fish should be scaled prior to being filleted; do not remove the skin. To scale fish, place on a clean glass or PTFE cutting board. Run the edge of the knife blade from the tail toward the head to scrape off the scales. Cross-contamination can be avoided by rinsing the cutting board and knife with acid and distilled water. After scaling, rinse the fish with distilled water and place on a clean cutting board; the fish is then ready for filleting.

Prior to filleting, hands should be washed and rinsed with distilled water and, if gloves are worn, they should be talc-free and dust-free. Place fish on a clean glass or PTFE cutting board. Care should be taken to avoid puncturing internal organs because the fillet tissue can become contaminated from materials released from the organs. If organs are punctured, the fillet tissue should be rinsed in contaminant-free deionized distilled water and blotted dry.

Fillets should be cut as follows:

- Make a diagonal cut from the base of the cranium following just behind the gill to the ventral side just behind the pectoral fin.
- Remove the flesh and ribcage from one side of the fish by cutting from the cranium along the spine and dorsal rays to the caudal fin.
- The skin should be scored prior to homogenizing the entire fillet.

Fillets should be weighed and recorded to the nearest gram. Sample weights will vary according to project specifications. Residue from the filleting process should be placed in a double-bagged plastic trash bag and disposed of properly in a dumpster.

ED_004144A_00000101-00818

8. COMPOSITING TECHNIQUES AND RECOMMENDATIONS

The sample weight/size is project specific. Following is the compositing technique assuming a 200-g (0.44-lb) sample weight. The composited sample should contain, at a minimum, three individuals of similar size. The number and length of individuals or fillets should be recorded for each composite sample.

All samples in a composite sample should be similar in length such that the product of the length of the smallest individual divided by the length of the largest individual multiplied by 100 is greater than or equal to 75 percent:

$$\frac{Minimum\ Size}{Maximum\ Size} \times 100 = \_\_\_\_\_ \geq 75\%$$

This will ensure similarities in age and exposure to the area in question (EPA 2000).

9. SAMPLE CONTAINERS AND PRESERVATION TECHNIQUES

Composite fillet samples will be individually labeled and placed in the appropriate container; the container type will be dictated by the analytical laboratory. Whole-body fish composites will be individually labeled, wrapped in aluminum foil, and double-bagged in clean plastic, zip-lock airtight bags as preferred by the analytical laboratory. Individual sample labels will contain the following information:

- Project number
- Sample location and station number
- Species (genus and specific epithet)
- Individual sample number
- Total number of individuals in composite
- Sampler's initials
- Date and time of sample processing.

For shipping to the analytical laboratory, a 3-in. layer of inert cushioning material (bubble wrap) will be placed on the bottom of a waterproof cooler or ice chest. The samples will then be placed on the cushioning material and surrounded with ice double bagged in plastic bags to maintain a temperature of 4°C or lower. A temperature blank should be included in each cooler. COC records will be completed at the time of sample preparation and compositing. All samples will be sent by overnight express to the laboratory or hand-delivered the day after collection. The COC must be signed showing any sample transfer and placed in a plastic bag taped to the inside lid of the cooler. Each cooler should have a COC for those samples contained in that cooler. The cooler/ice chest drain should be taped shut. Appropriate shipping labels are attached to the top of the cooler and "This Side Up" labels placed on all four sides of the cooler/ice chest.

ED_004144A_00000101-00819

Lastly "Fragile" labels should be placed on at least two locations of the cooler/ice chest. Be aware of any weight limitations that a shipper may have for shipping the cooler/ice chests.

10. REFERENCES

EA Engineering, Science, and Technology, Inc., PBC. (EA). 2014a. *Standard Operating Procedure No. 001 for Sample Labels*. Revision 0. December.

———. 2014b. *Standard Operating Procedure No. 002 for Chain-of-Custody Form*. Revision 0. December.

———. 2014c. *Standard Operating Procedure No. 004 for Sample Packing and Shipping*. Revision 0. December.

(U.S.) Environmental Protection Agency (EPA). 2000. *EPA Guidance for Assessing Chemical Contamination Data for Use in Fish Advisories Volume 1 Fish Sampling and Analysis – Third Edition* (EPA 823-B-00-007). November.

Murphy, B.R. and D.W. Willis. 1996. *Fisheries Techniques: Second Edition*. American Fisheries Society, Bethesda, Maryland. pp. 173-197.

ED_004144A_00000101-00820

This page intentionally left blank

ED_004144A_00000101-00821

Standard Operating Procedure No. 059
for
Field Logbook

Prepared by

EA Engineering, Science, and Technology, Inc., PBC
225 Schilling Circle, Suite 400
Hunt Valley, Maryland 21031

Revision: 1
December 2014

This page intentionally left blank

CONTENTS

Page

1. SCOPE AND APPLICATION 1

2. MATERIALS 1

3. PROCEDURE 1

4. MAINTENANCE 3

5. PRECAUTIONS 3

6. REFERENCES 3

ED_004144A_00000101-00824

This page intentionally left blank

ED_004144A_00000101-00825

1. SCOPE AND APPLICATION

The purpose of this standard operating procedure (SOP) is to delineate protocols for recording field survey and sampling information in the Field Logbook.

2. MATERIALS

The following materials may be required:

- Field Logbook (Teledyne 415 Level Book, or equivalent)[1]
- Indelible ink pen (e.g., Sharpie®).

3. PROCEDURE

All information pertinent to a field survey or sampling effort will be recorded in a bound logbook. Each page/form will be consecutively numbered, dated, and signed. All entries will be made in indelible ink, and all corrections will consist of line-out deletions that are initialed and dated. The person making the correction will provide a brief explanation for the change. Entries are factual only. No personal opinions should be entered.

There should be no blank lines on a page. A single blank line or a partial blank line (i.e., at the end of a paragraph) should be lined to the end of the page. If only part of a page is used, the remainder of the page should have an "X" drawn across it. The bottom of each page must be signed and dated by the field personnel entering the information.

At a minimum, entries in the Field Logbook will include but not be limited to the following:

- Date.
- Project number and project name.
- Name and address of field contact.
- Identification of sample crew members.
- Documentation should include model numbers of equipment used (e.g., drilling rigs) and calibration (if applicable). Each day's entry should begin with time onsite, who is onsite (including observers other than the sampling crew), brief description of what work will be performed that day and how, and the weather.

[1] Pre-printed, bound forms are approved as well. See SOP No. 016 for recommended content and format.

ED_004144A_00000101-00826

- If samples are being taken in or near tidal waters, the time of high and low tide for the site should be determined from local gauges or tables and recorded.

- References such as maps of the sampling site.

- Times of key daily milestones should be entered (e.g., time borings began, times personnel arrived and left site, times subcontractors arrived and left site, etc.). Time should be recorded in the left-hand margin on the page in military time.

- Sample-specific information:

  — Unique, sequential field sample number

  — Purpose of sampling

  — Location, description, and log of photographs of each sampling point

  — Details of the sample site (e.g., elevation of the casing, casing diameter and depth, integrity of the casing, etc.)

  — Documentation of procedures for preparation of reagents or supplies which become an integral part of the sample (e.g., filters and absorbing reagents)

  — Type of media of sample (e.g., groundwater, surface water, soil, sediment, and product)

  — Suspected waste composition

  — Number and volume of sample taken

  — Sampling methodology, including distinction between grab and composite sample

  — Sample preservation

  — Date and time of collection

  — Collector's sample identification number(s)

  — Sample shipment (e.g., name of the laboratory and cartage agent: Federal Express, United Parcel Service, etc.)

  — Field observations (e.g., oily sheen on groundwater sample, incidental odors, soil color, grain size, plasticity, moisture content, layering, Unified Soil Classification System classification, etc.)

ED_004144A_00000101-00827

— Any field measurements made (e.g., pH, conductivity, explosivity, water depth, organic vapor analyzer readings, etc.)

— Signature and date by the personnel responsible for observations

— Decontamination procedures.

Sampling situations vary widely. No general rules can specify the extent of information that must be entered in a Field Logbook. However, records should contain sufficient information so that someone can reconstruct the sampling activity without relying on the sampler's memory. Further, the project work plan or field sampling plan should be reviewed to identify additional specific information or requirements that should be included in the Field Logbook.

The Project Manager will keep a master list of all Field Logbooks assigned to the Sampling Team Leaders. One Field Logbook kept by the Project Manager will be a master site log of daily activities and will contain the list of Field Logbooks assigned to Sampling Team Leaders.

Project name and number should be clearly marked on the outside cover using indelible ink. If more than one Field Logbook exists for the project, then the number of the Field Logbook should also be clearly marked on the outside cover.

4. MAINTENANCE

At the end of the field sampling effort, the Field Logbook should be scanned and filed in the electronic file for the project and maintained according to the EA Records Retention Policy or contract requirements.

5. PRECAUTIONS

None.

6. REFERENCES

EA Engineering, Science, and Technology, Inc., PBC. 2014. Standard Operating Procedure No. 016 for Surface Water, Groundwater, and Soil/Sediment Field Logbooks. December.

U.S. Environmental Protection Agency. 1980. *Interim Guidelines and Specifications for Preparing Quality Assurance Project Plans*, QAMS-005/80.

ED_004144A_00000101-00828

———. 1990. *Sampler's Guide to the Contract Laboratory Program*. EPA/540/P-90/006, Directive 9240.0-06, Office of Emergency and Remedial Response, Washington, D.C. December.

———. 1991. *User's Guide to the Contract Laboratory Program*. EPA/540/O-91/002, Directive 9240.0-01D. Office of Emergency and Remedial Response. January.

ED_004144A_00000101-00829

Standard Operating Procedure No. 063
Chemical Data Management

Prepared by

EA Engineering, Science, and Technology, Inc., PBC
225 Schilling Circle, Suite 400
Hunt Valley, Maryland 21031

Revision No. 0
December 2014

This page intentionally left blank

TABLE OF CONTENTS

Page

1. INTRODUCTION 1

1.1 PURPOSE 1
1.2 SCOPE 1
1.3 DEFINITIONS 2
1.4 ROLES AND RESPONSIBILITIES 2

1.4.1 Project or Task Managers 2
1.4.2 Database Administrator 3
1.4.3 Data Coordinator 3

2. EQUIPMENT 5

2.1 COMMERCIAL SOFTWARE 5
2.2 CUSTOM SOFTWARE 5
2.3 HARDWARE 5

3. PROCEDURE 6

3.1 MANAGEMENT PROCESS OVERVIEW 6
3.2 REVIEW PROJECT INFORMATION 8
3.3 REVIEW FIELD SAMPLE PLAN 8
3.4 REVIEW LABORATORY INFORMATION 10
3.5 CHEMICAL DATA MANAGEMENT PLANNING 11

3.5.1 Data Tracking System 11
3.5.2 Data Storage Systems 14
3.5.3 Data Analysis and Reporting System 16

4. REFERENCES CONSULTED 18

ATTACHMENT A: CHEMICAL DATA MANAGEMENT PLAN SUPPORTING INFORMATION
ATTACHMENT B: GENERIC ELECTRONIC DATA DELIVERABLE STRUCTURE
ATTACHMENT C: GENERIC CHEMICAL DATABASE STRUCTURE AND DATA DICTIONARY

ED_004144A_00000101-00832

This page intentionally left blank

ED_004144A_00000101-00833

1. INTRODUCTION

Many engineering and environmental compliance projects require site sampling and generation of associated chemical analysis data. The chemical data are used for a wide variety of purposes such as site assessments, remedial design, long-term monitoring, litigation support, and human health and ecological risk assessments. A project may often have auxiliary or historical data components that must integrate with the chemical data.

Most project plans include development of a site sampling plan and quality assurance project plan/data quality objectives for the laboratory to ensure the correct sampling and analysis methods are used. There are many related standard operating procedures (SOPs) that specifically address field activities and sampling protocols. Although the field sampling and laboratory specifications are typically well documented, the actual management of the data also requires planning, organization, and documentation. The EA data professionals described in this SOP should be engaged from the proposal stage (to provide accurate estimates of budget, scope, and schedule) through to the execution of the project (to design and implement data processing and storage solutions).

1.1 PURPOSE

This SOP provides requirements, guidelines, and general information to consider in the planning, development, and execution of a chemical data management plan (CDMP). It will provide guidance on:

- Project requirements review
- Field sample plan review
- Laboratory specifications review
- Laboratory deliverables (report and electronic data deliverables [EDDs])
- Development of a CDMP
- Chemical data storage considerations and options
- Chemical data component structure
- Analysis and reporting options
- Commercial and agency-specific database systems.

If the CDMP is not a contract deliverable, one should be generated regardless as an internal document for project staff use.

1.2 SCOPE

The requirements and guidelines are applicable to all projects with chemical data components.

ED_004144A_00000101-00834

1.3 DEFINITIONS

Auxiliary Data—Other project-specific data that may integrate with the chemical data, i.e., bore log data, well gauging data, geo-spatial coordinate data, and field analysis data.

Historical Data—Previously generated chemical data and associated auxiliary data, i.e., from past site investigations or regular periodic sampling events of monitored sites.

1.4 ROLES AND RESPONSIBILITIES

1.4.1 Project or Task Managers

The Project Manager or Task Manager specifically assigned to oversee the chemical data task is responsible for the planning and implementation of the CDMP that will define the project requirements and final data deliverable specifications. Specific responsibilities are to:

- ***Review Project Data Requirements***—Review the project requirements for the chemical data to ensure all client deliverables for analysis, reporting, and data storage will be met.

- ***Create Sampling Plan***—Design and/or review the field sampling plan to ensure the proper numbers and types of samples will be collected, documented, and tracked.

- ***Select Laboratory and Define Performance Criteria***—Select the laboratory that will meet the project requirements for methods, detection limits, quality control performance, and deliverables. Projects may require complex quality assurance project plan/data quality objectives. Establish point of contact, price, deliverables, and schedule with the laboratory.

- ***Identify Other Data Sources and Plan for Integration***—Determine if auxiliary data or historical chemical data will need to be collected and integrated with the chemical data. Common sources of auxiliary data are bore log data, well gauging data, geo-spatial/ location coordinate data, and field analysis data. Plan for staff to evaluate, process, and integrate data sources.

- ***Create the CDMP***—Prepare the CDMP to define:

  — Data tracking
  — Data processing and storage
  — Analysis and reporting requirements.

- ***Designate Data Support Staff***—Depending on the size and complexity of the project, a Database Administrator (DBA) and/or Data Coordinator may be designated. Consult a DBA to review the data processing and storage options and make recommendations. Plan for the expertise and staffing to meet data processing and deliverable requirements.

ED_004144A_00000101-00835

- ***Monitor Progress***—Inform DBA, Data Coordinators, and analysis and reporting staff of all data sources, deliverable requirements, and schedules as defined in the CDMP. Monitor the progress and quality of data collection, processing, and reporting. This requires regular communication and status reporting with the designated DBA and Data Coordinators to ensure data tasks are completed on schedule and any problems are addressed in a timely fashion.

- ***Review Final Products***—All final deliverables (reports, data tables, data files, etc.) must be reviewed to ensure project requirements are met.

1.4.2 Database Administrator

The DBA has advanced data evaluation, data management, and programming skills. The DBA is able to evaluate a wide variety of complex data sources and project requirements, and to advise the Project Manager on appropriate solutions and staffing. Specific responsibilities are:

- ***Data Review Consultation***—As requested by the Project Manager, must review all relevant project information and then provide information on data management and staffing options, and work with the Project Manager to create and implement the CMDP.

- ***Data Management***—Design and implement the data processing and storage solutions. The solution may consist of multiple databases and any applications or tools needed to manage the tracking, processing, security, storage, analysis, and reporting of data as assigned by the Project Manager.

- ***General Data Support Services***—As requested by the Project Manager or designated staff, may provide other support, i.e., data searches, queries, ad-hoc reporting, staff training, or other data services as needed.

- ***Data Coordinator Oversight***—May function directly as the Data Coordinator, or may manage other Data Coordinators. The DBA will assign database maintenance or programming tasks as deemed appropriate to the skill level of the Data Coordinator. The DBA and Data Coordinator may share interchangeable tasks. The level of direct involvement and specific project responsibilities of the DBA will be defined by the Project Manager in the CDMP.

- ***Final Data Product Delivery***—Ensure that the final client data deliverable meets all specifications (including those associated with data validation), and provides the data in the designated format.

1.4.3 Data Coordinator

The Data Coordinator is responsible for the actual day-to-day tracking, processing, and reporting of the project data. The specific tasks assigned to the Data Coordinator will depend on the skill

ED_004144A_00000101-00836

level, tools, and applications provided. The Data Coordinator works closely with the DBA, or the DBA may serve directly as the Data Coordinator. The Data Coordinator should be engaged from project inception through data reporting. Specific responsibilities are:

- ***Field Sampling and Chain-of-Custody Tracking***—Review and compare the field samples to the sampling plan. Review chain-of-custody (COC) for accuracy and completeness.

- ***Staff Communications***—Communicate with the field staff, shippers, and laboratory to ensure samples are collected and received on schedule. Alert the Project Manager, field staff, and laboratory of any discrepancies or problems. Maintain all records related to sampling, shipping, and COC. Communicate with other project staff, i.e., reporting or analysis staff, as needed.

- ***Laboratory Communications***—Serve as the point of contact between the Project Manager and the laboratory. Receive and maintain all laboratory reports, correspondence, COC, and EDDs. Alert the laboratory to any sampling or data issues and document resolution of any problems.

- ***Laboratory Data Quality Review***—Examine all data deliverables and reports from the laboratory to ensure data accuracy, completeness, and adherence to the analysis and reporting requirements.

- ***Data Processing***—Execute all data processing duties as defined in the CDMP. This includes tasks such as: EDD processing, standardizing, and importing chemical data into the final database; organizing and storing original EDD files; and reviewing and preparing historical or auxiliary data to integrate with chemical data.

ED_004144A_00000101-00837

2. EQUIPMENT

2.1 COMMERCIAL SOFTWARE

A wide variety of generic and program-specific software is available for the storage, analysis, and reporting of chemical data. Some of the more commonly encountered software products are:

- Microsoft Office® Excel, Access, SQL Server, SQL Server Express
- Equis® Chem and Geo
- Automated Data Review – U.S. Army Corps of Engineers
- Environmental Data Management System – U.S. Army Corps of Engineers
- Staged EDD – U.S. Environmental Protection Agency
- Environmental Resources Program Information Management System – Air Force Center for Engineering and the Environment.

2.2 CUSTOM SOFTWARE

Depending on the size and complexity of the project data, custom applications can be defined and developed internally to meet the data tracking, processing, and reporting needs of the project.

2.3 HARDWARE

Not applicable.

ED_004144A_00000101-00838

3. PROCEDURE

3.1 MANAGEMENT PROCESS OVERVIEW

The management of chemical data is often a component of a much larger engineering or environmental compliance project. The planning of the field sampling effort, selection of a laboratory, and establishment of laboratory data quality objectives must be well defined.

Because the chemical data management component can be a foreign topic to many Project Managers, its complexity can be underestimated, causing negative impacts on the project schedule, budget, staff, and overall project performance. The development of a successful CDMP depends on a full understanding of its precursors: project requirements (scope, budget, schedule, and deliverables), field sampling plan, and laboratory quality assurance project plan/data quality objectives.

The chemical data management process has been divided into four major steps:

1. ***Review Project Requirements***—Scope of work, schedule, budget, data deliverables, analysis, and reporting requirements.

2. ***Review Field Sampling Plan***—Numbers and types of samples, sample schedule, field quality control requirements, and sampling methods.

3. ***Review Laboratory Specifications***—Required certifications, methods, detection limits, analyte lists, validation requirements, reporting and EDD specifications, and quality assurance project plan/data quality objectives.

4. ***Develop and Execute CDMP***—The plan has three components:

   — Data tracking
   — Data processing and storage
   — Analysis and reporting requirements.

These steps are applied universally to all chemical data projects, regardless of size or complexity. Each step will require varying levels of detail as dictated by the objectives and requirements of each project. The chemical data management process overview is presented in Figure 1.

The requirements and guidelines of each step are presented in the following sections.

Attachment A provides additional supporting material and background information for each step.

ED_004144A_00000101-00839

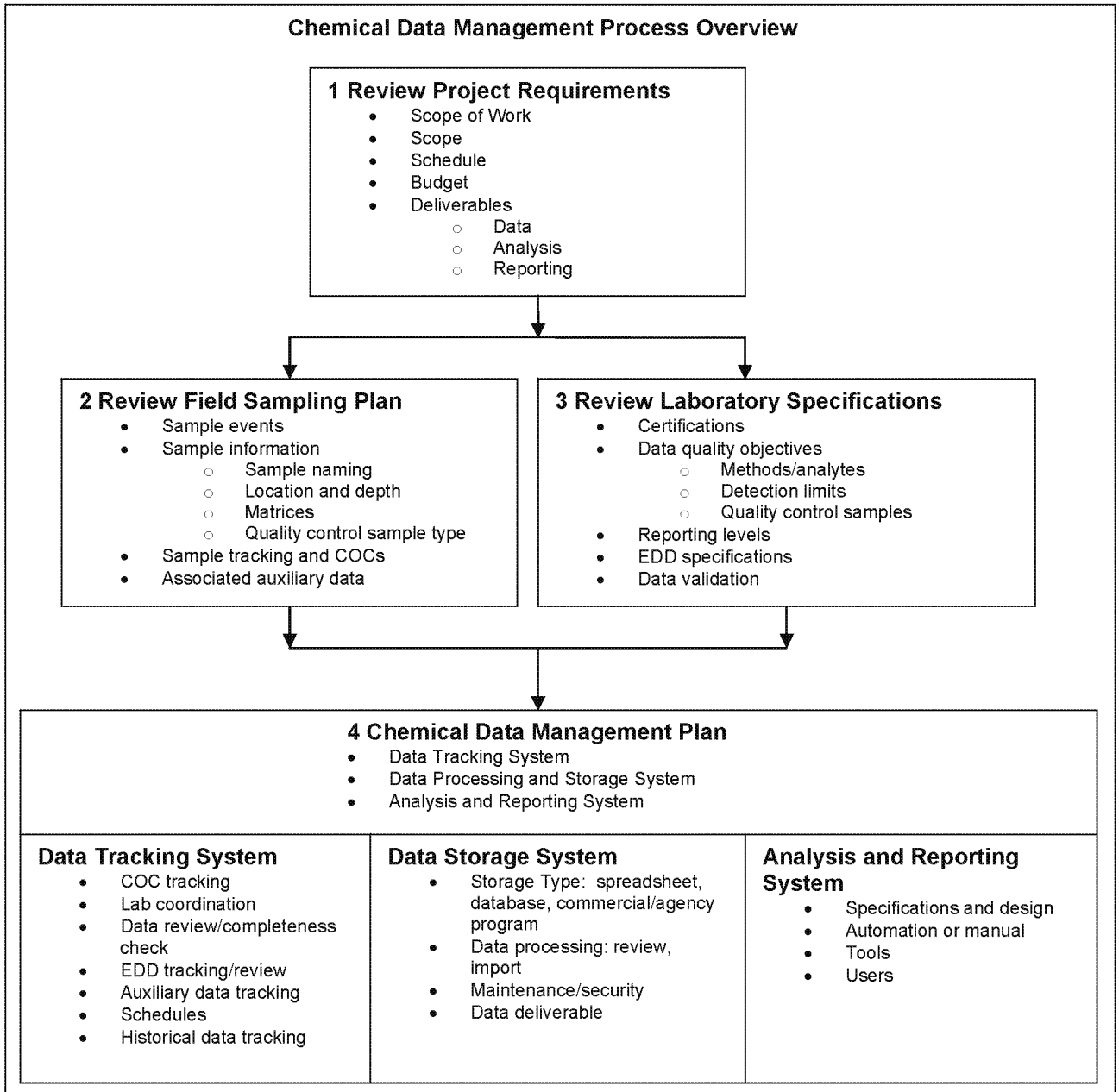

Figure 1. Chemical Data Management Process

ED_004144A_00000101-00840

3.2 REVIEW PROJECT INFORMATION

The parent project requirements define the project objectives, scope of work, deliverables, schedule, and budget.

Required

- Review the available project information (scope of work, schedule, budget, and deliverables) as they pertain to the chemical data requirements.
- Contact a DBA to review the requirements and assist in preparing the CDMP. Only extremely simple sampling and analysis projects are exempt from DBA review. The DBA will provide:
  - — Options and specifications for data tracking and processing, data storage, software, analysis and reporting, and final product delivery
  - — Information on staffing and expertise required
  - — Estimate of timing and level of effort for each task
  - — Evaluation of auxiliary or historical data to be integrated with the chemical data.
- Prepare and review the data management effort estimates and confirm the estimates meet the project requirements. Revise as necessary to define and meet requirements.

Guidelines

Refer to Attachment A, Section 1, for additional support information on reviewing project information and considerations in defining chemical data management requirements.

3.3 REVIEW FIELD SAMPLE PLAN

The Project Manager must plan for field staff, training, equipment, schedules, site safety, and the actual sample collection strategy. The field sampling data will eventually be integrated and matched to its laboratory analysis data.

The sampling plan will include information on:

- Sample events, numbers of samples
- Sample locations and depths
- Sample matrices and field quality control samples
- Sample naming conventions
- Sample tracking and COC policies

ED_004144A_00000101-00841

- Sample techniques and containers
- Decontamination procedure
- Sampling schedule.

Required

- ***Prepare List of Expected Field Samples***—The list is prepared as an electronic (Excel) file that provides the field information to be linked to the laboratory results. The field sample list includes:

Field Sample Name	Naming system may consist of codes for location, depth, type, etc.
Field Sample Date	Date and time of sample collection.
Sampling Event	For projects that have long-term monitoring or sample collections, the sampling dates may be grouped into distinct events, i.e., quarterly sampling.
Field Sample Location	Location designation from sampling site. Sites may have designated well locations, test pits, vapor points, etc.
Field Sample Matrix	Specific matrix, i.e., groundwater, surface water, sediment, effluent, soil gas, etc.
Field Sample Type	Used to identify field quality control samples, i.e., field duplicates, rinse blanks, trip blanks, etc.
Field Sample Parent	Sample name of parent sample to a field duplicate.
Sample Start Depth	Typically used for soil boring samples, start depth of sample.
Sample End Depth	Typically used for soil boring samples, end depth of sample.
Field Filtered	Typically used for water samples to indicate field filtered for dissolved metals.
Other Data	Other data columns as needed to provide sample-specific information that will be captured in the final database.

- ***Prepare List of Locations***—The list is prepared as an electronic (Excel) file that contains the field location information to be linked to the field samples. The location provides details for each location, i.e., areas of concern, Geographic Information System coordinates, location type, etc. The location list includes:

Location Name	Location naming system may be designated by the client, i.e., existing monitoring wells, or may be designated in the field sampling plan.
Alternate Location Name	Locations may have alternate historical names, or designated identifiers from state or local regulators.
Area of Concern	Large sites may have locations grouped into areas of concern.
Location Type	Designates the type, i.e., monitoring well, vapor point, discharge point, and soil boring.
X coordinate	Latitude coordinate.
Y Coordinate	Longitude coordinate.
Z Coordinate	Elevations.
Coordinate System	Name of standard system for location coordinate values.
Other Data	Other data columns as needed to provide location-specific information that will be captured in the final database.

ED_004144A_00000101-00842

Guidelines

- If the sampling plan includes auxiliary data to be captured in the database and linked to chemical data (i.e., for soil boring logs, field analyses, and well gauging), plan to organize and capture the data in an electronic format (Excel) to facilitate data integration. Consult a DBA for design specifications.

- For large, complex projects that have major field sampling plans, consult a DBA prior to starting field operations to ensure field data can be collected electronically in a consistent and standardized manner.

- Enforce consistency in naming and coding conventions when collecting all forms of field data. This will facilitate later linking of field sample data to its chemical laboratory results and any auxiliary data.

- Refer to Attachment A, Section 2, for additional support information on reviewing field sampling plans and considerations in defining chemical data management requirements.

3.4 REVIEW LABORATORY INFORMATION

The laboratory performing the sample analysis provides information on methods, reporting limits, analyte lists, and quality control procedures that will be applied to the project samples. The laboratory will produce deliverables, typically a laboratory report of the results (that includes a narrative of any analysis issues), and an EDD file of the results.

Required

- The analysis performance requirements (quality assurance project plan/data quality objectives) must be reviewed by the Project Manager to ensure laboratory performance will meet project requirements. The documentation will define the methods, analyte list, reporting limits, and quality control procedures that will be applied to the project samples.

- All projects will have an EDD file format specified for result delivery. Consult a DBA to confirm the EDD format will meet database import specifications and contain all required laboratory data.

Guidelines

- Selection of a laboratory and preparation of a quality assurance project plan/data quality objectives are not part of the actual CDMP, but are critical precursors to the generation of analytical results that will meet project requirements. The Project Manager should review all available laboratory project information prior to the sampling event to ensure the laboratory results will be acceptable for project use.

ED_004144A_00000101-00843

- Refer to Attachment A, Section 3, for additional support information on reviewing laboratory specifications and considerations in defining chemical data management requirements.

3.5 CHEMICAL DATA MANAGEMENT PLANNING

After the field sampling and laboratory requirements have been reviewed, the actual CDMP can be developed. The CDMP is divided into three main sections:

Section	Components
Data Tracking System of Sample Delivery Group (SDG) and EDDs	Tracking of field samples and COC EDD tracking and review SDG tracking of validated data Linking field sample and laboratory data Linking auxiliary data Storing source data
Data Storage System	Data storage (spreadsheet versus database) Commercial or agency-specific data program Data review and processing Data security and maintenance Data deliverable
Data Analysis and Reporting System	Analysis requirements and deliverables Reporting requirements and deliverables

Projects can vary greatly in data quantity, complexity, storage, and reporting requirements. Especially for large, complex projects, a DBA can provide valuable information on the options for data storage and processing systems to be defined in the CDMP.

The three main sections of the CDMP are addressed in the following sections.

3.5.1 Data Tracking System

A formal data tracking system must be established to organize and monitor the incoming project data. The main objective of the tracking system is to discover missing, incomplete, erroneous, or otherwise unacceptable data as soon as possible in the project life cycle. Early discovery of problems may allow field crews, laboratories, or other subcontractors (e.g., data validators) to make corrections, or allow the Project Manager to make alternate plans to address project data issues. Data tracking should include a means to verify that data validation, if required, has been performed and reported correctly before final storage of information.

Large projects have many types of data-generating activities. Figure 2 presents a schematic diagram of the various project activities that produce sources of data that may need to be tracked, processed, and incorporated into the final data storage system. The individual files must be checked for accuracy and completeness, and compared against each other to verify the related information can be linked in the future for final data storage and reporting.

ED_004144A_00000101-00844

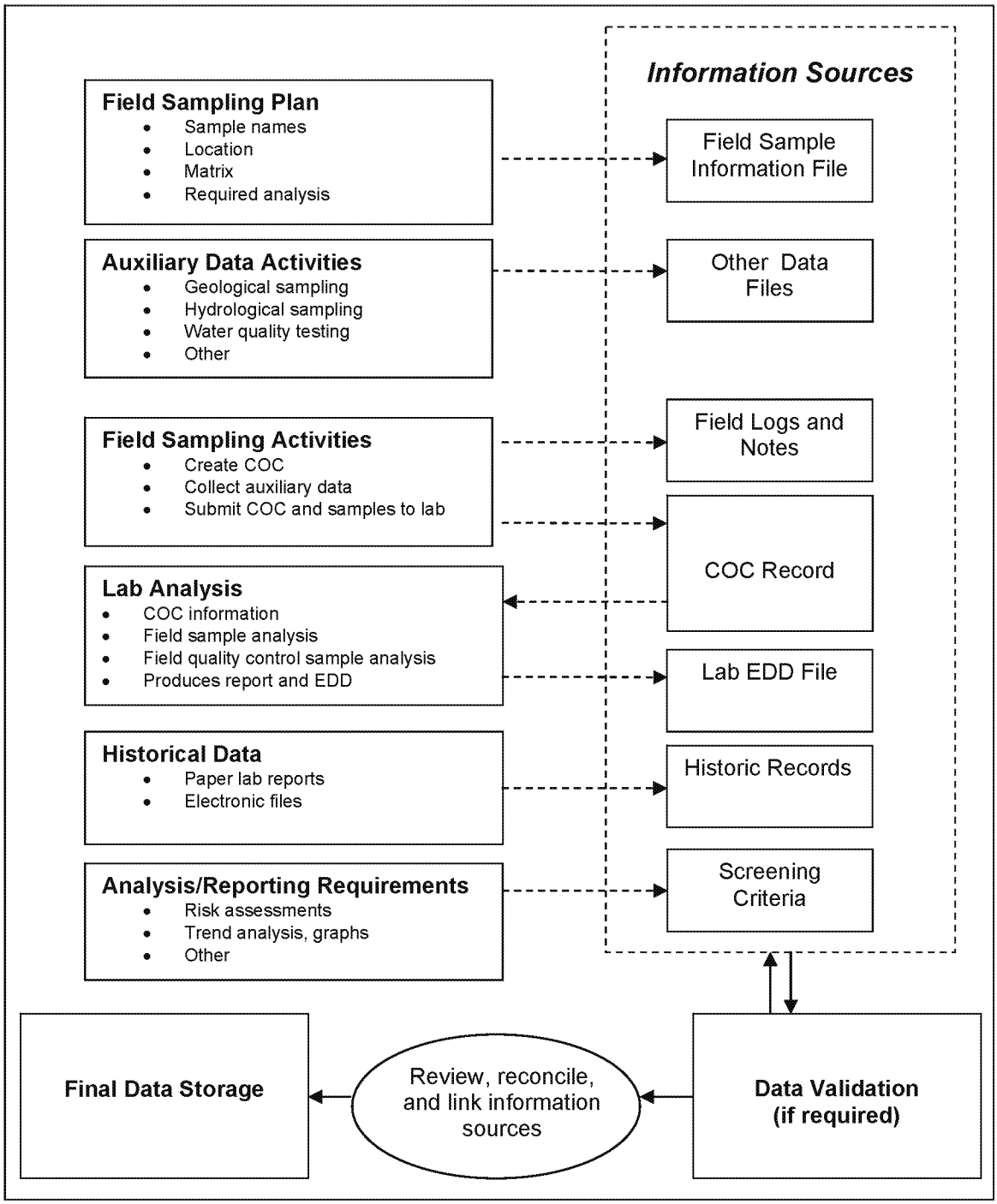

Figure 2. Project Information Sources

ED_004144A_00000101-00845

Required

- Consult with a DBA to define the project data sources and determine the type of tracking system to be developed. Tracking systems may be as simple as a series of Excel files managed and reviewed by a Data Coordinator, or customized database applications that provide forms, tools, reports, and automation to assist the Data Coordinator.

- A Data Coordinator must be assigned to manage the tracking system.

- The tracking system must perform the following tasks:

Task	Description
Sampling Plan Verification	Correct number and types of expected field samples have been collected and recorded, and sent to the laboratory.
Sample Information Verification	Sample names, sample dates, depths, locations, coordinates, and other sample information are correctly recorded.
COC Verification	Laboratory COC is correct, with expected field samples, dates, matrices, methods for each sample, and signed as required.
Laboratory Deliverable Verification	Reports and EDD files contain all required samples, methods, analytes, and required supporting material. The EDD must be reviewed for accuracy and completeness, including tracking of SDGs through the data validation process.
Auxiliary Data Verification	If well gauging, soil boring, or other field analysis data (i.e., organic vapor analyzer readings, water quality parameters) have been collected, that data must also be verified for accuracy and completeness and standardized for linking to chemical data samples and locations.
Data Linking	There must be a mechanism for linking field samples to laboratory EDD data, and any auxiliary data.
Coordination and Communication	The system must include a mechanism for alerting the Data Coordinator or appropriate project staff, laboratories, other subcontractors regarding missing, incomplete, or incorrect data, and resolving any data tracking issues.
Source Data Storage	All original source files (sample lists, laboratory EDDs, field analysis files, etc.) must be stored in a secure location. Original files allow traceability back to original information sources.

- The laboratory must be notified of any errors in the EDD file. A corrected EDD file must be issued by the laboratory. For example, a field same name or sampling date must not be corrected directly in the database unless a corrected EDD is obtained.

Guidelines

Refer to Attachment A, Section 4, for additional support information on different data sources and considerations in defining chemical data management requirements.

ED_004144A_00000101-00846

The attachment includes detailed information on:

Data Type	Description
Laboratory EDD Files	EDD files must have a specific format, structure, and content.
EDD Validation Files	EDD files may go through a formal validation process that may change data or designate some data as not useable.
Screening Criteria Data	There are many types of federal, state, and local quality standards that can be used to screen the chemical concentrations in samples.
Historical Data	Some projects may have accumulated years of past chemical analysis data, stored in various file types, or hard copy, that must be merged with the new data. The standardizations and processing of historical are often a major undertaking that requires analysis and planning.

3.5.2 Data Storage Systems

3.5.2.1 Overview

There are many factors to consider when selecting a chemical data storage system. The storage system will receive processed field and laboratory data from the tracking system, provide data to the analysis and reporting system, and may be the final data deliverable to the client. Chemical data storage systems typically fall into three main categories:

- Spreadsheets
- Databases
- Commercial data programs (that typically use an internal database or data files).

Only the simplest of projects store chemical data in a spreadsheet. This document focuses on the management of chemical data projects that require the use of a database or commercial data management product.

3.5.2.2 Implementation of Data Storage System

Required

- The Project Manager must consult with the DBA in the selection and implementation of a database system. After analyzing the project and data requirements, the DBA provides information on staffing and level of effort to implement and maintain the selected data system.

- If the client requires the use of a particular commercial data product, the Project Manager must plan for the staff required to implement and maintain the product. The development of expertise to operate a commercial database system may require extensive staff training.

ED_004144A_00000101-00847

- Protect the original source data. All original EDDs or other source files used to populate the database must be protected from any type of corruption or editing to allow traceability back to source information and ensure data integrity.

- The database system must be secure, properly maintained, and protected. A professional DBA can provide information on security, maintenance, and disaster recovery policies.

- Regarding data storage systems, the CDMP must address the following topics:

Topic	Description
Storage Selection	Provide criteria used to select particular data storage system (client specified, small project requires Excel only, etc.)
Data Security	Specify types and locations of data users, and data security policies at user and network levels. Determine if external programs or services will require access to the data.
Data Processing	Specify the system for reviewing, importing, and updating data within the data storage system. The processing of EDD data is of particular importance.
Data Maintenance	Specify the plan for short- to long-term maintenance, disaster recovery, and protection of the data.
Final Delivery	Specify the final data deliverable to the client. The client may require data to be delivered in a specific file format external to the storage data system.
Analysis and Reporting Options	Specify if the data storage system will interface with other programs, or produce data for outside programs. A wide variety of commercial and custom programs can be used to generate charts, reports, and tables, and to conduct statistical analysis.

Guidelines

- In general, the use of spreadsheets as a final data repository should be avoided, except in the case of simple projects that have few samples and simple reporting requirements.

- If a DBA is not used to manage the data:

  — Plans for securing and protecting the data should be discussed with the Network Administrator to arrange for proper user access and file backup.

  — Identify the major types of data to be processed; generally, EDD files are the most frequent, and develop a reliable, consistent process for reviewing and processing the data.

  — Protect the source data and data integrity. A common problem to avoid is allowing multiple users to access multiple Excel data files for purposes of table and chart generation. This situation often results in users altering values, cutting and pasting sections of data, and corrupting the original files to make verification of source data impossible.

ED_004144A_00000101-00848

- There are many options to consider when selecting and implementing a chemical data storage system. Refer to Attachment A, Section 5, for details on the following topics:

Topic	Description
Comparisons of Spreadsheets and Databases	The pros and cons of using spreadsheets or database to store, analyze, and report chemical data.
EDD File Formats and Contents	Details on the EDD formats and fields included in a laboratory EDD. A generic EDD file format example is provided (Attachment B).
Generic Chemical Database Structures (Attachment C)	Description of tables and fields that can be used as a generic chemical database. The actual database is available for use as an Access2007 database.
Commercial/Agency Chemical Data Programs	Details on common commercial or government agency chemical data programs.
Data Processing and Database Updates	Details on updating data, data imports, corrections to data, and maintaining data integrity.
Network and Database Security	Details on network and database level security, user, and program access to data.
Long-Term Data Storage	Policy on long-term data storage and archiving.
Final Data Deliverables	Details on typical client data deliverables.

3.5.3 Data Analysis and Reporting System

A chemical database can be used as the central source data to satisfy a wide array of analysis and reporting requirements. Typically, the requirements consist of report tables, graphs, or data exports created in Excel. The basic approaches for creating tables, charts, and exports are:

- For projects with minimal requirements, the DBA can export data to spreadsheets that allow other users to create tables, charts, and reports from the export.

- For projects that have complex or long-term requirements, custom programs can be written to allow multiple users to select and create a wide variety of reports, tables, and charts directly from the database.

Required

- The Project Manager must have specifications on analysis and reporting requirements of the project.

- The Project Manager must evaluate the size, complexity, and frequency of the analysis and reporting requirements and determine the appropriate mechanism for generating the tables, charts, or exports.

ED_004144A_00000101-00849

Guidelines

- Using DBAs or skilled Data Coordinators to produce tables and charts directly from the database has several advantages over manually processing spreadsheet data:

  — Eliminates manual transcription or cut/paste errors

  — Database queries are able to produce summary data (sums, averages, counts, pivot tables) directly from the database

  — Database queries provide powerful linking, searching, and filtering options for data presentation

  — The source database remains protected.

- For long-term or complex reporting, implementation of a customized program can allow general users to produce automated tables and charts directly from the database. The programs provide flexibility in selecting sample dates, screening criteria, locations, and other fields contained in the database for reporting purposes. The program allows for multiple users and the source database remains protected.

- If using spreadsheets and manual creation of tables and charts, verification of reported data against the source data should be performed to ensure transcription/cut and paste errors have not occurred.

ED_004144A_00000101-00850

4. REFERENCES CONSULTED

U.S. Environmental Protection Agency. 2001. Requirements for Quality Assurance Project Plans (U.S. Environmental Protection Agency QA/R-5). March. http://www.epa.gov/QUALITY/qs-docs/r5-final.pdf. Accessed on 26 January 2012.

———. 2005a. Uniform Federal Policy for Quality Assurance Project Plans – Manual (applicable to all Department of Defense (Army, Navy, Air Force, Coast Guard), many state and U.S. Environmental Protection Agency Regions). March. http://www.epa.gov/fedfac/pdf/ufp_qapp_v1_0305.pdf. Accessed on 26 January 2012.

———. 2005b. Uniform Federal Policy for Quality Assurance Project Plan – Workbook. March. http://www.epa.gov/fedfac/pdf/ufp_wbk_0305.pdf. Accessed on 26 January 2012.

———. 2006. Guidance on Systematic Planning Using the Data Quality Objectives Process (U.S. Environmental Protection Agency QA/G-4). February. http://www.epa.gov/QUALITY/qs-docs/g4-final.pdf. Accessed on 26 January 2012.

———. 2012. Example Uniform Federal Policy for Quality Assurance Project Plan. http://www.epa.gov/fedfac/pdf/qa_ct_fishstudy.pdf. Accessed on 26 January 2012.

ED_004144A_00000101-00851

Attachment A

Chemical Data Management Plan
Supporting Information

This page intentionally left blank

TABLE OF CONTENTS

Page

1. REVIEW PROJECT REQUIREMENTS GUIDELINES 1

2. REVIEW FIELD SAMPLING PLAN GUIDELINES 2

3. REVIEW LABORATORY SPECIFICATIONS GUIDELINES 4

4. DATA TRACKING SYSTEM INFORMATION 6

4.1 OVERVIEW 6
4.2 ELECTRONIC DATA DELIVERABLE 6

4.2.1 Data Validation 7
4.2.2 Other Electronic Files 7
4.2.3 Screening Criteria 8
4.2.4 Historical Records 8

4.3 DATA STORAGE SYSTEMS 10

4.3.1 Spreadsheets and Database Comparison 10
4.3.2 Generic Chemical Database Structure 11
4.3.3 Commercial and Agency Chemical Data Programs 12

4.4 DATA MAINTENANCE 13

4.4.1 Database Updates 13
4.4.2 Corrections and Data Integrity 14
4.4.3 Data Security 14

4.5 ANALYSIS AND REPORTING SYSTEMS 15

ED_004144A_00000101-00854

This page intentionally left blank

ED_004144A_00000101-00855

1. REVIEW PROJECT REQUIREMENTS GUIDELINES

When defining the chemical data management requirements within the parent project, the following topics must be considered:

Topic	Considerations	Impacts
Project Objectives	What is the nature of the overall project? • Phase I investigation • Long-term monitoring • Remediation design and evaluation • Superfund • Commercial or government client? What are the data deliverables and schedules? • Report tables • Graphs/trends • Statistical analysis/modeling • Screening concentrations • Multiple event reporting • Actual data deliverable (database/electronic data deliverables [EDDs])	Reviewing the project plan gives the "big picture" of the scale of the project, requirements, schedule, and budget. Some project plans do not include any details on the chemical data component. Scrutinize any available requirements as early as possible and begin asking questions. Knowing the ultimate use of the data within the project helps to determine the level of technical expertise and staffing needed to manage, track, store, analyze, and report.
Technical Requirements	Are there any requirements supplied by the client such as: • Data Storage: Use of commercial or agency-specific chemical data programs • Are there any historical data to evaluate or incorporate • Data quality objectives: required laboratory certifications, detection limits, methods, types, and numbers of quality control samples • Reporting and Analysis Objectives: complex reports, risk assessments, trend analysis, permit limit evaluations • Final data deliverable specifications Will Information Technology/data technical support staff be required?	Many government agencies require specific data storage formats and programs that are generally very complex. Staff may require considerable training to develop the expertise. Standardization and merging of historical data (paper and electronic records) are generally labor intensive and require experienced database support. Using a non-approved laboratory or failing to provide the laboratory with the specific methods and data quality objectives can generate data that are invalid for project use. Complex reporting and analysis requirements may require Database Administrators (DBAs), statisticians, risk assessors, or report automation development. Some clients require the actual chemical data be supplied as a final product and may require a DBA to produce it. Data management experience levels and staffing costs must be considered.
Schedule, Budget, Logistics	Has the impact of the chemical data component on the overall project schedule, budget, logistics been evaluated? Has the level of effort for data management been realistically addressed in the parent project plan?	Must plan for limitations on laboratory data delivery, sample transport, holding times, laboratory capacity and capabilities, and analysis costs. Complex or long-term projects may require Information Technology support for database planning and report automation.

ED_004144A_00000101-00856

2. REVIEW FIELD SAMPLING PLAN GUIDELINES

When reviewing the field sampling plan, the following topics must be considered:

Topic	Considerations	Impacts
Sample Events	Will the project be a small single sampling event, or a long-term project, such as quarterly monitoring? What are the projected numbers and matrices of samples? What are the analysis methods (and analyte list) applied to each sample? Is regular analysis and reporting required per event?	Projects with large numbers of samples and methods will generally require a database system and a DBA to maintain it. Long-term projects benefit from the development of a sustainable, repeatable sampling, data processing, and reporting plan. Repeatable data analysis and report generation by staff may require development of an analysis/reporting automation program.
Sample Locations and Depths	Will the data be used by a Geographic Information System? Has client specified a coordinate system? Will soil samples require designation as surface or subsurface soils? Are there associated auxiliary data such as geological, hydrological, biological, or weather data?	Confirm the coordinates system to be used by the Geographic Information System. Defining depth levels for soil samples may be needed for later risk assessments or geological/hydrological studies, and generation of boring logs. The data may include well gauging and soil boring information to be stored and linked to the chemical data.
Sample Matrices and Quality Control Types	Are samples clearly identified by proper matrix identifiers (groundwater, surface water, leachate, etc.)? Will water samples require "total" and "dissolved" parameters? Does project require dedicated field quality control samples such as field and trip blanks, field duplicates, or extra samples for matrix spikes?	Project may require specific matrix identifiers, not just generic soil or water matrix provided by laboratory. Sample data must be coded to differentiate between total and dissolved, particularly for metals. Sample data must be coded to differentiate between normal field samples and quality control samples.

ED_004144A_00000101-00857

Topic	Considerations	Impacts
Sample Naming and Chain-of-Custody	What is the sample naming system? There are two main approaches to sample naming: • Embed all information in the field sample name • Use a simple code name but store the sample detail in an external file.	The Project Manager may prepare in advance a sample table with pre-designated sample names and sample information (depth, coordinates, location grid name, and matrix code). Some database systems have limits on the length of field sample names.
	How will the complex sample information, i.e., location, depth, matrix, sample date, and type be associated to laboratory sample?	The field sample name must be properly transferred from the container to the chain-of-custody, to the laboratory data system to allow later matching of field sample and laboratory data.
	By whom/how will the chain-of-custodies, laboratory data, and field sample information be tracked and integrated? What field sample information will the laboratory provide?	The laboratory will only provide the field sample name, sample collection date, and generic matrix (solid or water). All other original field sample information (location, depth, matrix, etc.) must be captured and maintained by the Project Manager.

ED_004144A_00000101-00858

3. REVIEW LABORATORY SPECIFICATIONS GUIDELINES

Environmental laboratories vary greatly in capacity, capabilities, certifications, areas of expertise, level of service, and pricing structures. The choice of a laboratory can be driven by many project requirements, or even specified by the client. After a laboratory has been selected, it is critical to establish a point-of-contact or laboratory Project Manager assigned to the project. The laboratory Project Manager must be informed of all project requirements, including the data quality objectives. For complex projects, the data quality objective plan will specify the methods, analyte lists, detection limits, precision and accuracy, numbers and types of quality control samples, and laboratory deliverable and reporting requirements.

Developing a data quality objective document is a complex process that has been well defined by several agencies. Providing a data quality objective plan to the laboratory is critical to ensure the laboratory has the information it needs to produce the desired data deliverable.

In general, all laboratories produce a hard copy report package that includes sample lists, chain-of-custodies, result tables, a data narrative that describes any sample or analytical issues, and various other supporting tables and appendixes as defined in the reporting requirements.

Although the hard copy report package is a standard deliverable, every laboratory is capable of generating an EDD. The EDD is a file (usually Excel, .csv, or text) that contains the sample and analysis data. Most laboratories have a standard EDD file structure that contains the most commonly used data fields: sample name, sample date, sample type, sample matrix, laboratory sample identification, method, total or dissolved, analysis date, preparation date, result, qualifier, unit. Most laboratories can easily create an EDD structure customized with extra fields as requested by the customer.

All projects should require an EDD as part of the laboratory deliverable.

The laboratory data, whether hard copy or EDD, may include analysis results for field samples, quality control samples, laboratory control samples, dilution, and re-analyses. The Project Manager must be prepared to have the raw data reduced to the final sample results that will be reported to the client.

Some projects require that the laboratory results be validated. Validation is generally performed by a third party validation contractor. The validator performs an extensive review on all results and supporting material to determine if the analyses were performed to meet all performance specifications and analysis requirements. The validator marks the hard copy reports and edits the EDD file to flag the unacceptable results, and issues a validation report.

When reviewing the laboratory requirements, the following topics must be considered:

ED_004144A_00000101-00859

Topic	Considerations	Impact
Laboratory Certifications	Does a project require specific state or agency certifications? Is the certification current?	The laboratory data may be considered void if the laboratory does not hold the proper certifications, or has an expired certification.
Quality Assurance Project Plan/ Data Quality Objectives	Review the project quality assurance project plan/data quality objectives.	Project may have very specific lists of approved methods and reporting limits.
	Does the laboratory perform the required methods at the required levels of detection?	Laboratories provide published reporting and methods detection limits. Confirm that the methods will meet the project required detection limits.
	Does the project require use of reporting limits or method detection limits?	Confirm if the project requires non-detected results to be reported to the Reporting Limit or the Method Detection Limit. Generally, the Reporting Limit is 2-5 times higher than the Method Detection Limit.
	Has the method analyte list been confirmed?	The list of chemical analytes for similar methods can vary. Confirm exactly which analytes are to be reported per method.
	Does the project require its own dedicated sample matrix spikes, duplicates, blanks, or other quality control samples?	If a project requires its own quality control samples, the laboratory must be informed and extra field samples must be supplied. Otherwise, laboratories batch multiple project samples together and select quality control samples at random.
Laboratory Reports and EDD	Does the report include all supporting material as specified in the quality assurance project plan/data quality objective?	Clients may require all supporting material. The level of report detail must be specified.
	Does the laboratory EDD include quality control samples and re-analysis results that will require reduction?	Laboratory Information Systems are capable of producing almost any EDD structure specified by the client.
	Does the standard laboratory EDD structure contain all necessary fields for project?	The contents of the EDD may also be specified. Inclusion of laboratory quality control samples and re-analysis data require careful sorting and filtering to reduce and extract the desired final data.
Data Validation	Does the data require validation?	Validation increases the data delivery time and may also cause some results to be rejected from project use. As a result, edits may need to be made to the EDD.

ED_004144A_00000101-00860

4. DATA TRACKING SYSTEM INFORMATION

4.1 OVERVIEW

The Data Tracking System is needed to monitor and review the many types of files generated by project field activities and laboratories. Many projects store diverse types of information in separate files, usually as spreadsheets. In addition to the expected laboratory data, other sources of data include:

.

- ***Location Data***—Geographic Information System coordinates, elevations, areas of concern, parcel designations, etc.
- ***Boring Log Data***—Geological strata, geological samples, organic vapor analyte, or photoionization detector readings, etc.
- ***Well Gauging Data***—Well construction data, water depths, elevations, product thickness, etc.
- ***Water Quality Data***—pH, oxidation reduction potential, turbidity, iron, etc.
- ***Field Analysis Data***—Soil gas analysis, metals by x-ray fluorescence, other mobile laboratory analysis, or field instrument data.
- ***Historical Records***—Paper or electronic files of chemical or hydrogeological data and associated auxiliary data.
- ***Screening Data***—Federal, state, or local limits for chemicals in water, soil, air, and tissue.

For example, within the same project, there may be spreadsheet files for field sample lists, soil boring data with personal digital assistant or organic vapor analyte readings, well gauging data, a list of chain-of-custodies submitted to the laboratory, a list of EDD files produced by the laboratory, actual laboratory EDD files, laboratory report .pdf files, and an Excel file of state water quality standards that will be applied to the chemical data for screening purposes.

These individual files must be checked for accuracy and completeness, and compared against each other to verify the related information can be linked in the future for final data storage and reporting.

4.2 ELECTRONIC DATA DELIVERABLE

EDD files are the preferred delivery and storage mechanism for laboratory data. Laboratories store data in large Laboratory Information Management Systems. They are capable of producing EDD files of almost any configuration to contain as much detail as required. Most laboratories

ED_004144A_00000101-00861

have a default EDD structure, but customers may specify the file format and content of the EDD file per project.

The use of EDD files has many benefits:

- Prevents manual data transcription errors.
- Allows for easy upload into data systems.
- Produces the EDD file and hard copy laboratory report from the same Laboratory Information Management System and contains identical data
- Produces EDD files on old historical data if they remain in the Laboratory Information Management System or in archive files
- Contains only field sample data, or includes a full array of laboratory and field quality control results.

General project EDD policies:

- All new projects should require EDD files as the part of the laboratory deliverable.
- Some commercial or agency–specific software programs have a required EDD structure that must be provided to the laboratory.
- If exact EDD fields are not specified by a client or software program, use the default EDD file specifications contained in Attachment B to Standard Operating Procedure 063. Other fields may be added to the default EDD structure as required by the project.

4.2.1 Data Validation

EDD files may require validation after the laboratory has produced them. Validation is generally conducted by a third-party company that specializes in laboratory data review. The laboratory data and documentation are reviewed against specific analysis protocols and data quality objectives to determine if the analyses were conducted as required. The validation process is complex and includes detailed review of items such as: instrument calibration logs, standard preparations, sample holding times, laboratory certifications, quality control procedures, and preparation and analysis logs. The validation process may flag and reject some data as not useable.

4.2.2 Other Electronic Files

The other data that may be provided electronically may include:

ED_004144A_00000101-00862

- ***Location Data***—Geographic Information System coordinates, elevations, areas of concern, parcel designations, etc.

- ***Boring Log Data***—Geological strata, geological samples, organic vapor analyte, or photoionization detector readings, etc.

- ***Well Gauging Data***—Well construction data, water depths, elevations, product thickness, etc.

- ***Water Quality Data***—pH, oxidation reduction potential, turbidity, iron, etc.

- ***Field Analysis Data***—Soil gas analysis, metals by x-ray fluorescence, other mobile laboratory analysis, or field instrument data.

- ***Historical Records***—Paper or electronic files of chemical or hydrogeological data and associated auxiliary data.

- ***Screening Data***—Federal, state, or local limits for chemicals in water, soil, air, and tissue.

These other sources of data are generally supplied as spreadsheet files, or small database files. They may also be files produced from other software programs as text or .csv files.

Regardless of the file type, all sources of data that will be incorporated into the project must be reviewed, standardized, and prepared for linking to the samples and chemical data.

4.2.3 Screening Criteria

Many projects require that the chemical data be linked and compared to various federal, state, local, or permit-driven screening criteria. The screening criteria provide human health- or ecologically-based limit values on the concentrations of chemicals in various matrices. Some projects require multiple sources of limits for each matrix. Generally, the screening criteria chemicals and limit values are available in electronic form from websites. The Project Manager must supply the exact source of screening limit values. The screening criteria data must be processed, standardized, and imported into the database to link properly to the sample matrices and chemical results.

4.2.4 Historical Records

Projects may require the use and integration of historical chemical data.

When working with historical chemical data, it may be necessary to use hard copy project report tables and old laboratory reports as the data source. Hard copy data can exist in several forms. Some of the most common forms are listed below:

ED_004144A_00000101-00863

- ***Laboratory Reports***—The best source of hard copy data is an actual laboratory report. It is the original source of the raw laboratory data and will not suffer from any post-laboratory edits.

- ***Project Report Tables***—These are tables that have been created from the laboratory data and are generally found in documents produced for the project. They are usually in the form of "crosstab" tables that have samples listed as columns and methods/analytes listed as rows. Report tables vary greatly in quality as described:

  — Tables produced by manual data transcriptions are subject to transcription errors. Those produced by database automation may be reliable, but there is usually no way to confirm the production mechanism.

  — The same report may have several different versions/presentations of the same data (i.e., all results, hits only, hits that exceeded criteria, detects only, critical analytes only, etc.).

  — Some reports tamper with qualifiers, detection limits, and non-detected values. Some non-detected values may be displayed as "ND," thus losing the numeric value of the detection limit. Qualifiers other than "U" (non-detect) may have been removed.

  — Some reports create summed analytes, i.e., "total polycyclic aromatic hydrocarbon"; "benzene, toluene, ethylbenzene, and xylenes"; total volatile organic analyte; etc. that are not part of the original laboratory data. It may not be known exactly which analytes are in the sum or how non-detects were handled.

  — Some reports have converted results from original laboratory units, such as changing milligrams per kilogram to micrograms per kilogram. Conversion errors may have occurred. Some tables may not have the units explicitly stated.

In general, try to select the report table that most closely resembles the results as typically presented in a laboratory report, i.e., where the numeric results and qualifiers appear to be intact.

When converting paper records to electronic files, the general process is to manually type the data into a spreadsheet or desktop database. Additional considerations of data conversion are:

- Any manually transcribed data must have a percentage of the data reviewed for completeness and correctness.

- For very large, complex records, consider the use of a data entry database system to enforce standardization, improve the data review process, and facilitate future data linking.

- Be sure to include auxiliary data that are associated with the analytical results.

ED_004144A_00000101-00864

4.3 DATA STORAGE SYSTEMS

There are two basic options for data storage: spreadsheet or database. If a database is needed, it can be a small-scale desktop database such as Access, or a large scale server database, such as SQL Server or Oracle. There are also many commercial and agency specific programs, all of which use database systems. There are many storage options described in the following sections.

4.3.1 Spreadsheets and Database Comparison

The first big decision to make in storage selection is to evaluate the need for using either a spreadsheet or database system. A summary of spreadsheet and database pros and cons are listed below.

Spreadsheets

Pros

- Are easy to use, no advanced technical expertise required
- Can cut and paste data to make new tables
- Can apply formulas to cells
- Can use filtering and sorting
- Can use macros for some automation.

Cons

- Poor data integrity: easy to destroy/corrupt original data by sorting, updating, and copying
- Poor standardization: sample, method, units, and chemical names can have multiple variations for same item
- Columns not enforcing data types (can have text in number fields, numbers in date fields, etc.)
- Large datasets cumbersome to store in multiple sheets or files
- Repeated data values: if a sample has 180 results, all of the sample information (location, depth, matrix, types, sample date, etc.) is repeated 180 times
- Data not stored in a relational structure: cannot link data, i.e., linking chemical results to chemical screening limits; requires manual comparison
- Limited security features for data or users.

ED_004144A_00000101-00865

Databases

Pros

- Provides many powerful benefits for storing data in a relational structure
- Better protects data integrity via enforcement of data types and elimination of redundant data storage
- Provides for data standardization: enforces standard method, chemical, and unit names
- Links and stores large amounts of data together
- Provides linked relationships to allow easy searching and comparisons
- Allows advanced programming, analysis, and report automation
- Provides better security, for users and data.

Cons

- Requires professional data staff to maintain and use the data.
- Requires development of a program interface to allow users to use, search, and report data.

In summary:

- Spreadsheets are extremely easy to use, but do not enforce data integrity/protection, and have no powerful searching, linking, or analysis capabilities. Spreadsheets should only be used on the simplest projects that have small data sets and limited analysis and reporting requirements.
- Databases provide better data integrity, standardization, and powerful searching, linking, analysis, and reporting capabilities, but require professional administration for use. Most projects will require the use of a database and services of a DBA.

4.3.2 Generic Chemical Database Structure

A generic desktop chemical database (Access 2010) is available from the Information Technology Services group. The database incorporates the following features:

- The design incorporates the common data elements captured by most commercial or agency-specific database programs.

ED_004144A_00000101-00866

- Standardized table and field names are used to denote reference (look-up) tables, field types, and primary/foreign key fields.
- This database is suitable for scaling up to larger database systems, such as SQL Server, if needed.
- This database can be easily modified to include additional tables or fields as needed.

The structure and relationships of the generic chemical database are presented in Figure 1.

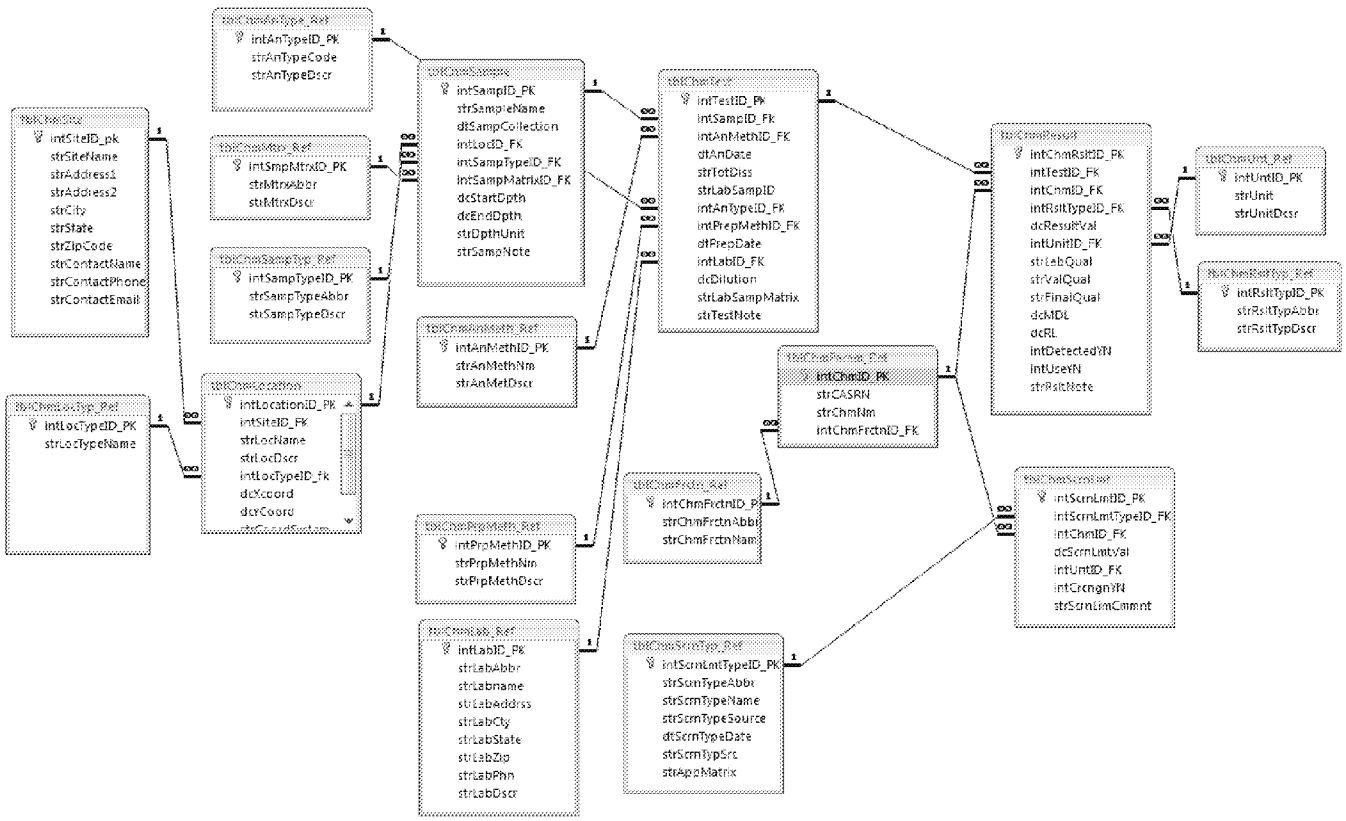

Figure 1. Generic Chemical Database Structure

The list of tables and fields in the generic chemical database are presented in Attachment C to Standard Operating Procedure 063.

4.3.3 Commercial and Agency Chemical Data Programs

There are several commercial and agency-specific chemical database programs available. These programs typically consist of a software application and an underlying database. The programs

ED_004144A_00000101-00867

are generally complex and tailored to the needs of the agency that produced them. They require extensive training and the development of staff expertise to use and maintain them.

Some of the commonly encountered chemical database products are:

- Equis® Chem and Geo
- Automated Data Review – U.S. Army Corps of Engineers
- Environmental Data Management System – U.S. Army Corps of Engineers
- Staged Electronic Data Deliverable – U.S. Environmental Protection Agency
- Environmental Resources Program Information Management System – Air Force Center for Engineering and the Environment.

These programs vary greatly in the quality and levels of performance, features, documentation, and technical support. Some programs are free, some require formal registration. The Equis® Chem and Geo software products, which are not government agency produced, have become increasingly popular and are in widespread use in many state agencies and U.S. Environmental Protection Agency regions, but are expensive to purchase and maintain.

Some database programs are "closed data source" and do not allow any access to the underlying database except via the software application. The user is limited to the importing, editing, reporting, and analysis features provided by the application. Database programs that provide open access to the database allow other customized tools to be developed and used with the database as a data source.

If a project requires the use of any commercial or agency chemical database programs, the Project Manager must investigate all costs, availability, training, and staffing issues associated with the procurement and use of these programs.

4.4 DATA MAINTENANCE

4.4.1 Database Updates

Many chemical database projects support long-term or periodic sampling programs. The Project Manager and Data Coordinator must plan for tracking and processing of new chemical data, from the laboratory source data to final data storage in the database. Many commercial and agency database programs include import modules to review and process the laboratory data into the database. Generic database systems can also include customized programs to review and process the data.

ED_004144A_00000101-00868

For large scale projects that may involve the review and processing of many chemical EDD files over time, it is critical to establish a uniform EDD file structure and content with the laboratory. Establishment of a standard, repetitive process for data review and importation will greatly increase the efficiency and quality of final data storage.

Database updates will be performed by the Data Coordinator or DBA.

4.4.2 Corrections and Data Integrity

As data are accumulated and reviewed, errors may be discovered. Depending on the type of error, corrections may be required to the database and to any source data files or documents.

It is of critical importance to maintain a chain of data integrity from the original data source to the database. If transcription errors were made on the chain-of-custody, laboratory report, or laboratory EDD file, the laboratory must be contacted to make the corrections and re-issue the source document or file. Making corrections to the database without notifying the laboratory will create discrepancies between the source data and the database.

Any reports generated from the database may be used for legal purposes and all results must be verifiable against the original source. Most chemical databases include fields to store information on the source of chemical data and, therefore, the database and the original data source must be kept synchronized; a change to the source data or a change to the database must be reflected in both to ensure data integrity.

The roles of Data Coordinator and DBA are designed to address the issues of tracking, coordinating, and documenting any data corrections.

4.4.3 Data Security

Access to the database and the source data must be controlled. There are many options available to protect data, depending on the type of database or data files used. Security guidelines are as follows.

4.4.3.1 Network Security

Most projects have a system of project folders established on a secure network. At a minimum, the chemical data source files and associated database can be organized and stored in folders accessible only to designated project personnel. Original source files must be protected from any modifications, and access to the database should be controlled using internal database security features.

4.4.3.2 Database Security

Many database programs have integrated security systems that allow secure user login and permissions for data operations within the database. Most database systems (generic,

ED_004144A_00000101-00869

commercial, or agency programs) have features to long-in users, and assign editing or read-only permissions to various users. Many "front-end" user programs limit users to the reporting and analysis features only, and allow only assigned DBAs permission to import or edit data within the database.

4.4.3.3 Long-Term Data Storage

Some chemical data projects can be active for many years. At the completion of any project, it is company policy that electronic files will be maintained for 4 years. If the database and associated source EDD files are not part of the client deliverable, the files will eventually be destroyed when the storage time limit is reached.

Refer to the EA Company "Records Retention Policy."

4.4.3.4 Final Deliverable

Most project plans will clearly state if the database or other data files are part of the final project deliverable. Some clients require only the analysis and reports of the data as the final deliverable, but not the data files. The Project Manager must confirm if any data files are required as a deliverable, and obtain the specifications for the files. In some cases, the client may require the original laboratory EDD files and the final database, or other final deliverable files that are created from the database.

Final deliverable files must be stored or archived in a secure location and are subject to the data storage policies of the company.

4.5 ANALYSIS AND REPORTING SYSTEMS

A database can be used as the source data to satisfy a wide array of analysis and reporting requirements. The Project Manager must define the analysis and reporting objectives. Typically, the requirements consist of report tables, graphs, or data exports. Suggested approaches for addressing those requirements are as follows.

For projects with minimal requirements:

- The DBA can export simple data exports to spreadsheets that allow other users to create tables, charts, and reports from the export.

- The DBA or other programmer can be directly used to create tables, charts, and graphs.

For projects that have complex or long-term requirements, custom programs can be written to allow multiple users to select and create a wide variety of reports, tables, and charts using the database as the data source. This approach is useful for long-term projects that have cyclical reporting of a complex nature. These customized programs allow users to select data by

ED_004144A_00000101-00870

locations, samples, date ranges, analytes to generate reports, tables, graphs, and even support automated document production.

Although programming the analysis and reporting process may not seem to be necessary for some projects, any report, table, or graph produced directly from the database eliminates the possibility of manual typing or transcription errors.

ED_004144A_00000101-00871

Attachment B

Generic
Electronic Data Deliverable Structure

This page intentionally left blank

GENERIC ELECTRONIC DATA DELIVERABLE STRUCTURE

Laboratories are able to create a wide variety of electronic data deliverables from the Laboratory Information Management Systems. Many have default electronic data deliverables structures if one is not specified by the laboratory client. A generic electronic data deliverable structure is presented below that will serve most chemical data projects.

Column		Description	Column Name	Column Type
1	Field Sample Name	Name of sample as recorded on the chain-of-custody.	Fld_Samp_Name	Text
2	Sample Date/Time	Date (and time) of sample collection in field.	Fld_Samp_Date	Date/time
3	Lab Sample Identification	Laboratory sample identifier.	Lab_Samp_ID	Text
4	Lab Sample Matrix	Sample matrix, as assigned by the laboratory. Laboratories use a generic code to designate solid or liquid, and do not code for detailed matrix types such as groundwater, surface water, wastewater, etc.	Lab_Samp_Matrix	Text
5	Lab Sample Type	Sample type as assigned by the laboratory to identify laboratory quality control samples such as duplicates, matrix spike, and matrix spike duplicate. Laboratories should be blind to field blanks and field quality control samples.	Lab_Samp_Type	Text
6	Prep Method	Sample Preparation method code.	Prep_Method	Text
7	Prep Date/time	Sample Preparation date (and time).	Prep_Date	Date/time
8	Analysis Method	Sample Analysis method code.	An_Method	Text
9	Analysis Date/Time	Sample Analysis date (and time).	An_Date	Date/time
10	Analysis Type	Analysis Type such as normal, dilution, and re-analysis.	An_Type	Text
11	Total or Dissolved	Used to designate total or dissolved chemicals, usually metals in water samples.	Tot_Diss	Text
12	CAS Number	Chemical Abstracts Service (CAS) unique identifier for chemical. Some parameters such as total organic carbon, chemical oxygen demand, and oxidation reduction potential will not have CAS numbers.		Text
13	Chemical Name	Standard chemical name of analyte.	Chem_Name	Text
14	Result Value	Analysis result value, usually a concentration.	Res_Value	Number
15	Units	Result units of measure.	Res_Units	Text
16	Lab Qualifier	Laboratory assigned qualifier to the result, used to indicate details about the result. A "U" qualifier generally indicates a non-detected result.	Lab_Qual	Text
17	Method Detection Limit	The laboratory determined limit of detection for the given method, matrix, and analyte. The Method Detection Limit is generally 3-5 times lower than the Reporting Limit.	Method Detection Limit	Number
18	Reporting Limit	The laboratory Reporting Limit of detection for the given method, matrix, and analyte. The Reporting Limit is generally 3-5 times higher than the Method Detection Limit.	Reporting Limit	Number
19	Lab Name	Name or Code to identify laboratory.	LabID	Text
20	Validation Qualifier	Used for validated electronic data deliverable data only. The validation qualifier is used to flag results that do not pass the validation review, or to correct laboratory qualifiers.	Val_Qual	Text

ED_004144A_00000101-00874

This page intentionally left blank

ED_004144A_00000101-00875

Attachment C

Generic Chemical Database Structure and Data Dictionary

This page intentionally left blank

GENERIC CHEMICAL DATABASE STRUCTURE AND DATA DICTIONARY

The generic database was created using MS Access, but can be scaled up for use on larger database systems, such as MS SQL Server.

The tables and fields are defined in the following data dictionary.

ED_004144A_00000101-00878

tblChmAnMeth_Ref: Reference list of analysis methods, such as SW-8260, SW-8270

Name	Type	Size	Description
intAnMethID_PK	Long Integer	4	unique ID
strAnMethNm	Text	50	method name
strAnMetDscr	Text	50	method description

tblChmAnType_Ref: Reference list of analysis codes, used to sample designate tests as initial, re-analysis, dilution, etc.

Name	Type	Size	Description
intAnTypeID_PK	Long Integer	4	unique ID
strAnTypeCode	Text	255	Analysis type code, such as IN, DL, RE
strAnTypeDscr	Text	255	Analysis type description

tblChmFrctn_Ref: Reference list of chemical fractions used to group the chemical parameter list by VOA, SVOA, METALS, etc.

Name	Type	Size	Description
intChmFrctnID_PK	Long Integer	4	unique ID
strChmFrctnAbbr	Text	10	Analysis fraction (method group), such as VOA, SVOA, etc.
strChmFrctnName	Text	50	Analysis fraction description

tblChmLab_Ref: Reference list of laboratories, with lab contact information

Name	Type	Size	Description
intLabID_PK	Long Integer	4	unique ID
strLabAbbr	Text	10	short code for lab
strLabname	Text	50	long name of lab
strLabAddrss	Text	50	lab address
strLabCty	Text	50	lab city
strLabState	Text	50	lab state
strLabZip	Text	50	lab zip code
strLabPhn	Text	50	lab phone
strLabDscr	Text	255	lab fax

ED_004144A_00000101-00879

tblChmLocation: List of sampling locations including location coordinates.

Name	Type	Size	Description
intLocationID_PK	Long Integer	4	unique ID
intSiteID_FK	Long Integer	4	assigned site
strLocName	Text	255	location name
strLocDscr	Text	255	location description
intLocTypeID_fk	Long Integer	4	assigned location type (well, boring, vapor point, etc)
dcXcoord	Double	8	x-location coordinate
dcYCoord	Double	8	y-location coordinate
strCoordSystem	Text	255	standard coordinate system
dcZcoord	Double	8	z-location coordinate (elevation)

tblChmLocType_Ref: List of sampling locations types, such as wells, borings, vapor point, etc.

Name	Type	Size	Description
intLocTypeID_PK	Long Integer	4	unique ID
strLocTypeName	Text	255	Location type name (monitor well, discharge point, etc.

tblChmMtrx_Ref: List of sampling locations types, such as wells, borings, vapor point, etc.

Name	Type	Size	Description
intSmpMtrxID_PK	Long Integer	4	unique ID
strMtrxAbbr	Text	5	short code for matrix (GW, SO, SS, SED, etc)
strMtrxDscr	Text	70	matrix description

tblChmParam_Ref: List of chemical analytes, and other parameters such as DO, ORP, turbidity.

Name	Type	Size	Description
intChmID_PK	Long Integer	4	unique ID
strCASRN	Text	20	CAS registry number
strChmNm	Text	100	parameter name
intChmFrctnID_FK	Long Integer	4	assigned chemical fraction

tblChmPrepMeth_Ref: Reference list of preparation methods, such as SW-5030, etc.

Name	Type	Size	Description
intPrpMethID_PK	Long Integer	4	unique ID
strPrpMethNm	Text	50	method name
strPrpMethDscr	Text	255	method description

tblChmResult: Chemical analysis results for sample tests

Name	Type	Size	Description
intChmRsltID_PK	Long Integer	4	unique ID
intTestID_FK	Long Integer	4	assigned test identifier
intChmID_FK	Long Integer	4	assigned chemical or parameter ID
intRsltTypeID_FK	Long Integer	4	assigned result type (target, surrogate, normal)
dcResultVal	decimal	4	analysis result value
intUnitID_FK	Long Integer	4	assigned result unit (mg/L, ug/kg, etc.)
strLabQual	Text	10	laboratory result qualifier
strValQual	Text	10	validation result qualifier
strFinalQual	Text	10	final result qualifier
dcMDL	Double	8	method detection limit
dcRL	Double	8	reporting detection limit
intDetectedYN	Integer	2	detect/non-detect flag (yes/no)
intUseYN	Integer	2	reportable/ useable result flag (yes/no)
strRsltNote	Text	255	result note

tblChmResultType_Ref: List of analysis result types (TIC, Surrogate, normal)

Name	Type	Size	Description
intRsltTypID_PK	Long Integer	4	unique ID
strRsltTypAbbr	Text	10	result type code (TIC, SURR, N)
strRsltTypDscr	Text	50	description (tentatatively identified compound, surrogate, etc.)

tblChmSample: List of analysis result types (TIC, Surrogate, normal)

Name	Type	Size	Description
intSampID_PK	Long Integer	4	unique ID
strSampleName	Text	255	field sample name
dtSampCollection	Date/Time	8	date/time of sample collection
intLocID_FK	Long Integer	4	assigned location ID
intSampTypeID_FK	Long Integer	4	assigned sample type ID
intSampMatrixID_FK	Long Integer	4	assigned sample matrix ID
dcStartDpth	Double	8	sample start depth
dcEndDpth	Double	8	sample end depth
strDpthUnit	Text	255	depth unit (feet, meters, etc)
strSampNote	Text	255	sample note

tblChmSampleType_Ref: List of sample types (normal, field duplicate, trip blank, etc)

Name	Type	Size	Description
intSampTypeID_PK	Long Integer	4	unique ID
strSampTypeAbbr	Text	10	sample type code (N, FB, TB, etc)
strSampTypeDscr	Text	255	description

tblChmScreenLmt: regulatory limit values, per chemical

Name	Type	Size	Description
intScrnLmtID_PK	Long Integer	4	unique ID
intScrnLmtTypeID_FK	Long Integer	4	assigned screen limit type ID
intChmID_FK	Long Integer	4	assigned parameter ID
dcScrnLmtVal	Decimal	16	screening limit value
intUntID_FK	Long Integer	4	assigned unit ID
intCrcngnYN	Byte	1	carcinogen yes/no
strScrnLimCmmnt	Text	50	screen limit note

tblChmScrnType_Ref: type of limit, such as Federal MCL, regional PRGS, etc.

Name	Type	Size	Description
intScrnLmtTypeID_PK	Long Integer	4	unique ID
strScrnTypeAbbr	Text	20	short code for limit type
strScrnTypeName	Text	75	long name of limit type
strScrnTypeSource	Text	255	limit source, such as document or web site.
dtScrnTypeDate	Date/Time	8	limit issue/ effective date
strScrnTypSrc	Text	250	limit source, such as document or web site.
strAppMatrix	Text	255	applicable matrices for limit type

tblChmSite: Stores list of sites, for projects that may have sample locations at multiple sites defined in the project.

Name	Type	Size	Description
intSiteID_pk	Long Integer	4	unique ID
strSiteName	Text	255	site name
strAddress1	Text	255	site address 1
strAddress2	Text	255	site address 2
strCity	Text	255	site city
strState	Text	255	site state
strZipCode	Text	255	site zip code
strContactName	Text	255	site contact person name
strContactPhone	Text	255	site contact person phone
strContactEmail	Text	255	site contact person e-mail

tblChmTest: Sample test, consists of sample ID, analysis and prep method, analysis date, and other testing information.

Name	Type	Size	Description
intTestID_PK	Long Integer	4	unique ID
intSampID_Fk	Long Integer	4	assigned sample ID
intAnMethID_FK	Long Integer	4	assigned analysis method ID
dtAnDate	Date/Time	8	analysis date
strTotDiss	Text	1	total or dissolved method (for metals)
strLabSampID	Text	255	laboratory sample name
intAnTypeID_FK	Long Integer	4	analysis type ID
intPrepMethID_FK	Long Integer	4	preparation method ID
dtPrepDate	Date/Time	8	preparation date
intLabID_FK	Long Integer	4	laboratory ID
dcDilution	Double	8	dilution factor
strLabSampMatrix	Text	255	laboratory matrix code (usually W or S)
strTestNote	Text	255	test note

tblChmUnit_Ref: list of result units

Name	Type	Size	Description
intUntID_PK	Long Integer	4	unique ID
strUnit	Text	20	unit (mg/L, ug/kg, etc)
strUnitDcsr	Text	100	description

ED_004144A_00000101-00883

Standard Operating Procedure No. 064
Sediment Boring Logs

Prepared by

EA Engineering, Science, and Technology, Inc., PBC
225 Schilling Circle, Suite 400
Hunt Valley, Maryland 21031

Revision No. 0
December 2014

This page intentionally left blank

TABLE OF CONTENTS

Page

LIST OF FIGURES iii
LIST OF TABLES iii

1. INTRODUCTION 1

2. PURPOSE 2

3. SCOPE 3

4. DEFINITIONS 3

5. PROCEDURE 3

   5.1 GENERAL INFORMATION PORTION OF SEDIMENT BORING LOG 3
   5.2 DESCRIPTION OF MATERIALS 6
   5.3 ASTM DESIGNATIONS D-2487 AND D-2488 DEFINE STANDARD ENGINEERING PRACTICE 8

6. DOCUMENTATION 9

7. REFERENCES 10

ATTACHMENT A: EQUIPMENT THAT MAY BE REQUIRED FOR CORE LOGGING
ATTACHMENT B: CHECKLIST FOR SEDIMENT BORING LOGS
ATTACHMENT C: UNIFIED SOIL CLASSIFICATION SYSTEM FIELD IDENTIFICATION PROCEDURES FOR FINE-GRAINED SEDIMENTS/SOILS OR FRACTIONS
ATTACHMENT D: UNIFIED SOIL CLASSIFICATION SYSTEM

ED_004144A_00000101-00886

This page intentionally left blank

ED_004144A_00000101-00887

LIST OF FIGURES

Number	Title
1	Sediment Boring Log Template
2	Example Sediment Boring Log for Drilling
3	Example Sediment Boring Log for Core Samples
4	Example Sediment Boring Log for Grab Samples

LIST OF TABLES

Number	Title
1	Field Application of Unified Soil Classification System
2	Comparison of Grain Size Scales for Sediment

ED_004144A_00000101-00888

This page intentionally left blank

ED_004144A_00000101-00889

1. INTRODUCTION

This Standard Operating Procedure (SOP) describes EA Engineering, Science, and Technology, Inc., PBC's (EA's) standard format for the completion of sediment boring logs. Applicable sample collection techniques considered for this SOP include traditional/sonic drill rig, sediment corers (manual, piston, vibracore, etc.), or grab type (Van Veen, Ponar, Peterson, etc.) sampling equipment. Adherence to a standard log format is necessary to ensure completeness of the log and to facilitate the comparison and correlation of logs completed by different personnel.

Other relevant EA SOPs potentially relating to sediment site characterization activities include:

SOP No.	Title	Revision	Date
001	Labels	0	August 2007
002	Chain-of-Custody Form	0	August 2007
003	Subsurface/Utility Clearance	0	August 2007
004	Sample Packing and Shipping	0	August 2007
005	Field Decontamination	0	August 2007
008	pH Measurement	0	August 2007
009	Temperature Measurement	0	August 2007
010	Water Level and Well Depth Measurements	0	August 2007
011	Photoionization Detector (MiniRae)	0	August 2007
015	Document Control System	0	August 2007
016	Surface Water, Groundwater, and Soil/Sediment Field Logbooks	0	August 2007
021	Sediment Sampling	1	August 2010
022	Sediment and Benthic Macroinvertebrate Sampling with Eckman Grab	0	August 2007
023	Organic Vapor Analyzer (Foxboro 128 GC)	0	August 2007
024	Photoionization Detector (Microtip HL-200)	0	August 2007
035	Small Boat Operations	1	August 2010
036	Turbidity Measurements (DRT 100)	0	August 2007
037	Dissolved Oxygen Measurements (YSI Model 57)	0	August 2007
038	Redox Potential Measurements	0	August 2007
039	Sample Preservation and Container Requirements	1	April 2012
041	Sludge/Lagoon Sampling	0	August 2007
042	Disposal of Investigation-Derived Material	0	August 2007
046	Aqueous Diffusion Samplers	0	August 2007
047	Direct-Push Technology Sampling	0	August 2007
052	Generic Quality Control Plan for Ecosystem Restoration Project Plans and Specifications Phase	0	August 2007
054	Collecting Fish Tissue for Chemical Analysis	0	August 2009
059	Field Logbook	1	November 2012
060	Avian Egg Collections	0	March 2012

Project-specific plans will supplement and may modify this standard format. Generally, elements of a project-specific plan that modify and supersede the standard format are identified as such in the Project Plan. EA recognizes that other protocols have been developed that meet the criteria of quality and reproducibility. Clients may have their own sediment sampling protocols that contain methodologies and procedures that address unique or unusual site-specific

ED_004144A_00000101-00890

conditions or may be in response to local regulatory agency requirements. In such cases, EA will compare both EA's and the client's protocols. The goal is to provide the client with the highest quality; therefore, if the client's protocols provide as much or more quality assurance than EA's protocols for the particular site or project, EA will adopt those specific protocols and this SOP will be superseded in those respects. If EA is required to implement the client's protocols in lieu of EA's protocols, EA will make the client formally aware of any concerns regarding differences in protocols that might affect data quality and will document such concerns in the project file.

A pre-mobilization conference is generally held to ensure that all personnel understand the project objectives and protocols. During the pre-mobilization conference, the Project Manager and/or Principal Investigators will review the project plans and discuss their impact or lack thereof on EA's SOPs. Prior to the pre-mobilization conference, the field geologist/engineer must develop a thorough understanding of all project-specific plans, as well as EA's SOPs, for the planned field activities. This should ensure that any potential conflicts can be resolved before initiating work.

An EA geologist/engineer shall be present on each operating drill rig or sampling vessel and will be responsible for ensuring the proper equipment is onsite (Attachment A), logging of samples, monitoring of sampling operations, recording of relevant field conditions, and preparing the boring logs. Attachment B provides a checklist of field geologist/engineer activities during sampling. Each geologist/engineer shall have a copy of the Sampling Plan and the approved Safety and Health Plan onsite.

Figure 1 illustrates the standard form for sediment boring logs. Examples of completed logs for a drilling, core, or grab sample are provided in Figures 2 through 4. Logs shall be recorded directly on the standard forms in the field without transcribing from a field logbook or other documents. This procedure reduces offsite work hours for the field geologist/engineer, reduces the potential for errors of manual copying, and allows the completed document to be field reviewed closer to the time of collection.

2. PURPOSE

This SOP provides requirements, guidelines, and general information to consider in the planning, development, and collection of a sediment sample via drilling, core, or grab. It will provide guidance on:

- Standard log completion
- Soil/sediment classification
- Field condition assessment
- Documentation requirements.

ED_004144A_00000101-00891

3. SCOPE

The requirements and guidelines are applicable to all sediment site investigation projects with soil/sediment characterization components.

4. DEFINITIONS

Drilling—For purposes of this SOP, a boring generally refers to a sediment sample location where a drill rig is employed for sample collection. However, the term "boring log" is used to describe the documentation collected and standard form used at all sediment sampling locations independent of the sample collection method.

Core—Sediment cores provide a cross section of site sediment and allow for vertical delineation of site parameters. Core samples can be collected through a variety of methods such as manual coring, piston coring, and vibracoring. Core tubes may include a flexible or rigid liner that can be extracted for visual observation and/or subsampling.

Grab—Grab samplers are typically used for collecting surface sediments. Grab samplers can provide a horizontal delineation of surficial materials or can be subsampled with core tubes or other subsampling equipment.

5. PROCEDURE

A boring log is completed for all sediment borings collected for site characterization purposes and projects with sediment characterization components. All items are completed in the field by the responsible geologist/engineer. The first line of the log shall be completed to indicate the: **Client and Project Name**, assigned **Location/Boring Name**, and **page number and total number of pages**.

The upfront section of the log includes information on the sample location, sampling equipment and methodology, surface conditions, and other general information on Location/Boring that may be useful for interpreting results. Following the general information section of the log is the Description of Materials section. This portion of the log is designed to collect required information on sediment characteristics and sediment classification.

5.1 GENERAL INFORMATION PORTION OF SEDIMENT BORING LOG

The items listed below follow the field numbering and categories as presented on the sediment boring log template (Figure 1).

1. ***Geologist Name/Signature***—The field geologist/engineer completing the log shall sign his/her full name on the first page of the log for each boring in a clear and legible fashion. Initials will suffice on succeeding pages of the log. The signature/initials are placed upon completion of each page of the log as certification of the accuracy and completeness of

ED_004144A_00000101-00892

the log by the field geologist/engineer. In the event there is a personnel change prior to completion of the boring log, personnel involved, date, and time (24-hour clock) of change shall be documented in the descriptive portion of the log at the depth where the change occurred.

2. ***Drilling Subcontractor/Equipment Operator***—The full name (legal, business name) of the drilling/sampling company shall be placed on the first page of the log for each boring. For projects where a regulatory agency or EA personnel are operating the sampling equipment, Item 2 shall be completed with the name of the Equipment Operator (e.g., "EPA GLNPO Mudpuppy" or "EA"). Any change shall be documented as per Item 1.

3. ***Operator Name and License (if required)***—The full name of the individual operating the sampling equipment shall be placed on the first page of the log for each boring. In states that require a licensed driller for the type of work in progress, the driller's license number shall also be placed on Line 3 of the first page of the log for each boring. Any change shall be documented as per Item 1.

4. ***Sampling Equipment and Methodology***—The drilling/sampling equipment and methodology shall be summarized on the first page of each boring log (and continued on succeeding pages as necessary). Record the type of sediment sampler used (drill rig, core, manual, and grab sampler) and any modifications made to the sampler.

   - ***Drill Rig Borings***—Record the barrel length, diameter, and sample interval. The field logbook should include general information on the drill rig manufacturer and model. Note such information as rod size, bit type and size, internal and external diameter of hollow stem augers, pump or compressor size, etc.

   - ***Core Samples***—Record the length and diameter of the core barrel and circle the type of corer used.

   - ***Grab Samplers***—Record the dimensions of the grab sampler and circle the type of grab sampler used (Van Veen, Ponar, Peterson, etc.).

   - ***Other***—Use the other row to indicate alternative sampling equipment.

   - ***Sampling Methodology***—Indicate the sample collection methodology intended for the core section. The method(s) for obtaining samples and subsamples shall be identified on the first page of each boring log (and continued on succeeding pages as necessary). For drilling operations, the citation of ASTM International designations on this portion of the log constitutes the field geologist/engineer's certification that the ASTM standard was met.

5. ***Project Number***—EA's alpha-numeric job code shall be indicated on each page of each boring log.

ED_004144A_00000101-00893

6. ***Latitude/Northing/Grid***—Coordinates of latitude/northing/grid shall be indicated on the first page of the log for each surveyed boring. This information may be acquired by on-vessel Global Positioning System equipment or a site survey if sediment sampling is occurring in a marsh, shallow stream, or other accessible location. Surveyed information may be added in the office or to a database in the field depending on project requirements. In either case, all quality assurance/quality controls for the survey data must be met. The use of a site datum shall be indicated on the log. If a site grid is utilized, the site grid coordinates shall be indicated on the field log and identified as such.

7. ***Longitude/Easting/Grid***—Coordinates of longitude/easting/grid shall be indicated on the first page of the log for each surveyed boring. This information may be acquired by on-vessel Global Positioning System equipment or a site survey if sediment sampling is occurring in a marsh, shallow stream, or other accessible location. Surveyed information may be added in the office or to a database in the field depending on project requirements. In either case, all quality assurance/quality controls for the survey data must be met. The use of a site datum shall be indicated on the log. If a site grid is utilized, the site grid coordinates shall be indicated on the field log and identified as such.

8. ***Start-Stop (Date/Time)***—The time (24-hour clock) and date drilling/sampling operations begin and end, including grouting or completion of well installation, shall be indicated on the first page of each boring log. The time and date of completion of sampling activities shall be documented in the descriptive portion of the log at the depth of penetration of the last sample or sample attempt. For borings completed in more than 1 day, the time and date drilling operations stop and resume shall be indicated to the descriptive portion of the log at the appropriate depth.

9. ***Sediment Surface Elevation***—The elevation of the sediment surface at the sample location shall be indicated on the first page of each boring log. This information may be acquired using on-vessel equipment or a site survey if sediment sampling is occurring in a marsh, shallow stream, or other accessible location. Sediment surface elevation must be tied to a coordinate system. Water depth measurements (see Item 11 below) can be used to calculate sediment surface elevations if they are referenced to regulated gauging station and corrected for water level fluctuations. The appropriate gauging station should be identified in the Project Plan. Surveyed information is added or checked as per Item 7.

10. ***Coordinate System***—Both horizontal (H) and vertical (V) control data shall be indicated on the first page of the log.

11. ***Depth of Water (Start)***—The water depth shall be determined and recorded at the beginning of sampling operations.

12. ***Depth of Water (End)***—The water depth shall be determined and recorded at the completion of sampling operations.

ED_004144A_00000101-00894

13. ***Sunny/Cloudy/Rain***—Surface conditions at the sampling site shall be indicated on the first page of the log and continued on succeeding pages.

14. ***Temperature (Degrees Fahrenheit)***—Air temperature at the sampling site shall be indicated on the first page of the log and continued on succeeding pages. Temperature should be recorded as degrees Fahrenheit.

15. ***Wind Direction***—Wind direction at the sampling site shall be indicated on the first page of the log and continued on succeeding pages.

16. ***Total Boring Depth***—The total depth (+0.1feet [ft]) of penetration at the time of the sampling attempt shall be reordered for each sampling attempt. For drilling operations, casing depth shall be no greater than the shallowest portion of the attempted sample interval.

17. ***Recovery Depth***—The total length of recovery should be recorded and the percent recovery should be calculated and indicated on the boring log.

18. ***Location Notes***—Item 18 on the log provides a space for additional observations at a location. These observations may include but are not limited to:

    - A narrative description of problems and their resolutions, e.g., refusal, sample wash-out, hole caving, "running sands," recurring problems at a particular depth, excessive grout takes, unrecovered tools, casing or screens, etc.

    - Observations of surface features adjacent to a location (piers, pilings, tributaries, outfalls, etc.)

    - Field measurements collected at the location (e.g., photoionization detector, pH, redox, etc.).

5.2 DESCRIPTION OF MATERIALS

1. All information in the descriptive portion of the log is placed with reference to the depth scale in the **Interval (ft)** column. The field geologist/engineer shall indicate units on the depth in feet scale as appropriate. The sample interval shall be indicated on the left side of the column as shown on Figures 2 through 4.

2. Observations on the length and appearance of recovered cores shall be recorded in the **Recovery (ft & %)** Column.

3. During drilling operations (this item does not apply to core or grab samples), for each sediment sampling attempt, the type of sampler shall be indicated at the appropriate depth.

ED_004144A_00000101-00895

4. For drilling operations (this item does not apply to core or grab samples), the total number of inches the sampler is advanced (actual penetration) into undisturbed sediment and the total number of inches of actual sample recovered shall be recorded for each sampling attempt.

5. For drilling operations between sampling attempts, wash samples, drill, or auger cuttings shall be described as to color and grain size, along with a description of drill action and water loss gains for the corresponding depth. The brand name and amount of any bentonite used for each boring, reason for use, and start (by depth) of this use shall be recorded. A narrative description of the grouting of the bore hole shall be recorded on the boring log (below the depth of completion and/or on succeeding pages).

6. The depth of each significant lithologic change shall be drawn to scale (+ 0.1 ft) on the **Description of Materials** column. Lithology shall be designated by the appropriate Unified Soil Classification System symbol (Attachment C). Changes observed in samples shall be indicated with a solid line. Changes inferred on the basis of cuttings or action of the drill rig shall be indicated with a dashed line on the graphic log and described in the narrative log. Gradational changes shall be indicated by a dashed, diagonal line extending over the depth of the gradational interval.

7. For drilling operations, the number of hammer blows required to advance a split-spoon sampler shall be recorded for each 0.5-ft advance for each sampling attempt. The number of blows and number of inches penetrated for a completed 0.5-ft interval shall be recorded (e.g., 75/3 inches [in.]). The letter "P" shall indicate that the sampler was advanced by the weight of the drill stem or the weight of the drill stem and hammer without driving. For the Standard Penetration Test (and only for the Standard Penetration Test), when less than 18 in. (but greater than 12 in.) are penetrated by a total (maximum allowable) of 100 blows, the number of blows for the last 12 in. of penetration (N) shall also be recorded (e.g., N=63).

8. The vertical location of samples shall be indicated in the **Sample ID Sample Interval** column as shown on Figures 2 through 4.

9. Each core/sample recovered shall be fully described on the log (for the complete depth of sediment collected at a location (i.e., if a 10-ft core was collected, the entire core should be logged including any intervals that were sampled). The descriptions of intact samples shall include in sequence the following:

   - ***Color (e.g., gray or reddish brown)***—Some project plans may specify the use of the Munsell Soil Color Chart or the Geological Society of America Rock Color Chart. If so, the chart shall be identified in the **Description of Materials** and both narrative and numerical descriptions of color shall be recorded in the log.

ED_004144A_00000101-00896

- ***Moisture Content (e.g., dry, moist, or wet)***—Below the water table, moisture content is noted only for samples less than completely saturated.

- ***Unified Soil Classification (e.g., sandy clay)***—Attachment D summarizes the Unified Soil Classification System Field Classification. Additional guidance is provided in Tables 1 and 2.

- ***Secondary Components (e.g., with some silt)***—Descriptive terms for relative proportions of secondary components are provided in Table 1.

- ***Unified Soil Classification Symbol (e.g., CL)***—Refer to Attachment D.

- ***Density (non-cohesive soil) (e.g., medium dense)***—Refer to Table 1.

- ***Consistency (cohesive soil (e.g., stiff)***—Refer to Table 1.

- ***Other Observations***—Presence of biota or debris, oily sheen, the presence/location/thickness of the redox potential discontinuity layer.

5.3 ASTM DESIGNATIONS D-2487 AND D-2488 DEFINE STANDARD ENGINEERING PRACTICE

1. Samples that are retained in jars and/or tubes (or other appropriate containers as per the Project Plan) shall be numbered sequentially down the core. Unsuccessful sampling attempts shall not be numbered. For drilling operations, individual samples from one sampler drive shall be numbered individually. The sample number and depth (+ 0.5 ft) of the top of that portion of the sample that is retained shall be recorded for each sample.

   Each sample container shall be labeled. The label shall be permanently marked (e.g., Sharpie) and shall identify the following:

   - Client and project name
   - Location/boring name
   - Collected by
   - Date of sample collection.

   Chain-of-custody requirements may also apply as per the Project Plan. Containerization and handling of sediment samples scheduled for chemical analysis are defined in the Project Plan.

2. A number of field determinations may be made in the field as per the Project Plan. These include but are not limited to:

ED_004144A_00000101-00897

- Sediment temperature
- Dissolved oxygen concentration in the water column above the sediment surface
- Salinity or conductivity of the overlying water column
- Sediment redox potential
- Pocket penetrometer readings
- Screening for organic vapors with a photoionization detector or flame ionization detector
- pH
- Specific conductance.

Protocols are established in the Project Plan. As appropriate, the protocol shall be identified in Item 18 and the data recorded in the **Description of Materials** column with reference to the depth scale.

3. Each boring log shall be checked for completeness and edited as appropriate by a qualified geologist or engineer (reviewer) to be assigned by the project manager or Director of Geotechnical Services. The review shall be completed prior to preparation of final boring logs in report format. Editing of sample descriptions and soil classifications shall be performed as appropriate for all samples for which laboratory physical testing (e.g., grain size distribution by sieve and hydrometer) has been performed. Sample descriptions and soil classification shall also be checked by visual examination of jar samples. Typically, a minimum of 25 percent of the jar samples are reviewed. The reviewer shall initial and date Item 1 (Geologist Name/Signature) of each edited page of the log he/she reviews.

6. DOCUMENTATION

When sampling has been completed, the sampling technician should ship the samples or deliver them to the laboratory in accordance with project procedures. Appropriate sampling documentation should be provided to the project data manager in accordance with applicable project procedures.

ED_004144A_00000101-00898

7. REFERENCES

ASTM International. 1993. Standard Guide for Collection, Storage, Characterization and Manipulation of Sediments for Toxicological Testing (EL-391-93). American Society for Testing and Materials, Philadelphia, Pennsylvania.

Murdoch, A. and S. MacKnight. 1994. Handbook of Techniques for Aquatic Sediment Sampling 2nd Edition. Lewis Publishers. Boca Raton, Florida.

U.S. Environmental Protection Agency. 2001. Methods for Collection, Storage and Manipulation of Sediments for Chemical and Toxicological Analyses: Technical Manual. EPA-823-B-01-002. Office of Water.

ED_004144A_00000101-00899

Figures

This page intentionally left blank

Figure 1 Sediment Boring Log Template

LITHOLOGIC LOG *Sediment Collection Log* *EA Engineering, Science, & Technology, Inc.*	Client Name and Project Name	Location/Boring Name	Sheet of
1 Geologist Name/Signature	5 Project Number	8 Start - Stop (Date/Time)	
2 Drilling Subcontractor/Equipment Operator	6 Latitude/Northing/Grid	9 Sed Surface Elevation *ft* 10 Coordinate System H V 11 Depth of Water (start) *ft*	
3 Operator Name *(License # If Required)*	7 Longitude/Easting/Grid	12 Depth of Water (end) *ft* 13 Sunny/Cloudy/Rain 14 Temperature (start/high) *F*	
4 Sampling Equipment and Methodology (Check One) ☐ Rotosonic: ___ -ft barrel ___ -in diameter ______ -ft spoon/sample ☐ Core: ___ -ft barrel ___ -in diameter ______ -VPM Manual/Vibracore/Other ☐ Grab Sample: -ft x -ft x -ft Box/Ponar/Van Veen/Other ☐ Other: ☐ Sample Collection Method:		15 Wind Direction 16 Total Boring Depth *ft* 17 Recovery Depth ft % 18 Location Notes	

Interval *(Depth)*	**Recovery** *(ft & %)*	**Description of Materials** Munsell Color; Moisture; Density; Consistency (Other Remarks)	**Sample ID** **Sample Interval**	**PID** *(ppm)*	**USCS** *Code*
1					
2					
3					
4					
5					
6					
7					
8					
9					
#					
#					
#					
#					
#					
#					
#					
#					
#					
#					
#					
#					
#					
#					
#					
#					
#					
#					
#					
#					
#					
#					
#					
#					
#					
#					

Figure 2 Example Sediment Boring Log for Drilling

LITHOLOGIC LOG *Sediment Collection Log* *EA Engineering, Science, & Technology, Inc.*	Client Name and Project Name **GLNPO/Spirit Lake**	Location/Boring Name **GL-DS-01-001**	Sheet 1 of 1

1 Geologist Name/Signature **Jaime Smith**	5 Project Number **1234567**	8 Start - Stop (Date/Time) **6/19/14 12:00** | **6/19/14 15:00**
2 Drilling Subcontractor/Equipment Operator **Drill Company A**	6 Latitude/Northing/Grid **649999.89**	9 Sed Surface Elevation **580.018** *ft* 10 Coordinate System H **NAD83** V **NAVD88** 11 Depth of Water (start) **20** *ft*
3 Operator Name *(License # If Required)* **Joe Smith 08976**	7 Longitude/Easting/Grid **10649999.89**	12 Depth of Water (end) **20** *ft* 13 Sunny/Cloudy/Rain 14 Temperature (start/high) **65** *F*

4 Sampling Equipment and Methodology (Check One)

X	Rotosonic: 20 -ft barrel 5 -in diameter 2 ft spoon/sample	
	Core: ___ -ft barrel ___ -in diameter ___ -VPM Manual/Vibracore/Other	
	Grab Sample: ___ -ft x ___ -ft x ___ -ft Box/Ponar/Van Veen/Other	
	Other:	
	Sample Collection Method: **2 ft sample intervals collected from split spoon**	

15 Wind Direction **NE**
16 Total Boring Depth **20** *ft*
17 Recovery Depth **20** ft **100** %
18 Location Notes **Location was adjacent to a cluster of pilings, just north of West Ditch Tributary.**

Interval (Depth)	Recovery (ft & %)	Description of Materials Munsell Color; Moisture; Density; Consistency (Other Remarks)	Sample ID Sample Interval	PID (ppm)	USCS Code
1 (0-3)	2/100%	Strong Brown (7.5YR 5/6); dry; SILT and fine SAND; non-plastic; soft		0.0	ML-SW
2		Poorly graded.		0.1	
3				0.1	
4 (3-5)	2/100%	Brown (7.5YR 4/3); moist; SILT little SAND and CLAY; nonplastic; soft	*GL-DS-01-03-05*	0.0	ML
5		well graded.		0.2	
6 (5-6)	1/100%	Light Greenish Gray (Gley 1 10YR); moist; fine SAND and SILT; nonplastic; med stiff.		0.0	SM
7 (6-10)	4/100%	Dark Greenish Gray (Gley 1 4/1); fine SAND some SILT; m. dense;		0.1	SM
8		well graded.		0.1	
9				0.1	
10				0.1	
11 (10-15)	4/80%	Greenish Gray (Gley 1 6/1); fine SAND some SILT, m. dense; well graded.		0.2	SM-ML
12				0.1	
13			*GL-DS-01-13-14*	4.5	
14		Increasing silt percentage.		0.1	
15				0.1	
16 (15-19)	5/100%	Light Yellowish Brown (2.5Y 6/4) with Light Greenish Gray (Gley 1 10/1)		0.2	CL
17		mottles; CLAY some SILT trace fine SAND; low plasticity; stiff; well graded.		0.1	
18				0.2	
19				0.5	
20			*GL-DS-01-19-20*	1.1	
21		*Total depth = 20 feet below top of surface.*			
22					
23					
24					
25					
26					
27					
28					
29					
30					
31					
32					
33					
34					
35					

Figure 3 Example Sediment Boring Log for Core Samples

LITHOLOGIC LOG *Sediment Collection Log* *EA Engineering, Science, & Technology, Inc.*	Client Name and Project Name **GLNPO/Spirit Lake**	Location/Boring Name **GL-SD-01-001**	Sheet 1 of 1

1 Geologist Name/Signature **Jaime Smith**	5 Project Number **1234567**	8 Start - Stop (Date/Time) **6/19/14 12:00** — **6/19/14 15:00**
2 Drilling Subcontractor/Equipment Operator **Drill Company A**	6 Latitude/Northing/Grid **649999.89**	9 Sed Surface Elevation **580.018** *ft* 10 Coordinate System H **NAD83** V **NAVD88** 11 Depth of Water (start) **20** *ft*
3 Operator Name *(License # If Required)* **Joe Smith 08976**	7 Longitude/Easting/Grid **10649999.89**	12 Depth of Water (end) **20** *ft* 13 Sunny/Cloudy/Rain 14 Temperature (start/high) **65** *F*

4 Sampling Equipment and Methodology (Check One)

- [ ] Rotosonic: ___ -ft barrel ___ -in diameter ___ -ft spoon/sample
- [X] Core: **10** -ft barrel **3** -in diameter **5000** -VPM Manual/Vibracore/Other
- [ ] Grab Sample: ___ -ft x ___ -ft x ___ -ft Box/Ponar/Van Veen/Other
- [ ] Other: **Lexan liner capped, transported vertically to shore for subsampling on 2 ft intervals**
- [ ] Sample Collection Method:

15 Wind Direction **NE**
16 Total Boring Depth **10** *ft*
17 Recovery Depth **9** ft **90** %
18 Location Notes **Location was adjacent to a cluster of pilings, just north of West Ditch Tributary.**

Interval (Depth)	Recovery (ft & %)	Description of Materials Munsell Color; Moisture; Density; Consistency (Other Remarks)	Sample ID Sample Interval	PID (ppm)	USCS Code
1 (0-3)	2/100%	Strong Brown (7.5YR 5/6); dry; SILT and fine SAND; non-plastic; soft		0.0	ML-SW
2		Poorly graded.			
3					
4 (3-5)	1/50%	Brown (7.5YR 4/3); moist; SILT little SAND and CLAY; nonplastic; soft	*GL-DS-01-03-05*	0.0	ML
5		well graded.		0.1	
6 (5-6)	1/100%	Light Greenish Gray (Gley 1 10YR); moist; fine SAND & SILT; nonplastic; med stiff.		0.0	SM
7 (6-9)	4/90%	Light Yellowish Brown (2.5Y 6/4) with Light Greenish Gray (Gley 1 10/1)		0.1	CL
8		mottles; CLAY some SILT trace fine SAND; low plasticity; stiff; well graded.		0.0	
9			*GL-SD-01-08-09*	0.2	
10					
11		*Total depth = 10 feet below top of surface. Recovery 9 feet.*			
12					
13					
14					
15					
16					
17					
18					
19					
20					
21					
22					
23					
24					
25					
26					
27					
28					
29					
30					
31					
32					
33					
34					
35					

Figure 4 Example Sediment Boring Log for Grab Samples

LITHOLOGIC LOG *Sediment Collection Log* *EA Engineering, Science, & Technology, Inc.*	Client Name and Project Name GLNPO/Spirit Lake	Location/Boring Name GL-DS-01-001	Sheet 1 of 1

1 Geologist Name/Signature Jaime Smith	5 Project Number 1234567	8 Start - Stop (Date/Time) 6/19/14 12:00 — 6/19/14 15:00
2 Drilling Subcontractor/Equipment Operator Drill Company A	6 Latitude/Northing/Grid 649999.89	9 Sed Surface Elevation 580.018 *ft* 10 Coordinate System H NAD83 V NAVD88 11 Depth of Water (start) 20 *ft*
3 Operator Name *(License # If Required)* Joe Smith 08976	7 Longitude/Easting/Grid 10649999.89	12 Depth of Water (end) 20 *ft* 13 Sunny/Cloudy/Rain 14 Temperature (start/high) 65 *F*

4 Sampling Equipment and Methodology (Check One)

	Rotosonic: ___ -ft barrel	___ -in diameter	___ -ft spoon/sample	
	Core: ___ -ft barrel	___ -in diameter	___ -VPM Manual/Vibracore/Other	
X	Grab Sample: 0.5 -ft x	0.5 -ft x	0.5 -ft Box/Ponar/Van Veen/Other	
	Other:			
	Sample Collection Method:	Sample collected with stainless steel scoop from top six inches of box corer. Location offset 10 ft from proposed.		

15 Wind Direction NE
16 Total Boring Depth 20 *ft*
17 Recovery Depth 0.5 ft 100 %
18 Location Notes First two attempts at this location washed out due to debris caught in jaws

Interval *(Depth)*	Recovery *(ft & %)*	Description of Materials Munsell Color; Moisture; Density; Consistency (Other Remarks)	Sample ID Sample Interval	PID *(ppm)*	USCS *Code*
1 (0-0.5)	2/100%	Strong Brown (7.5YR 5/6); dry; SILT and fine SAND; non-plastic; soft		0.0	ML-SW
2		Poorly graded.			
3					
4					
5					
6					
7					
8					
9					
10					
11					
12					
13					
14					
15					
16					
17					
18					
19					
20					
21					
22					
23					
24					
25					
26					
27					
28					
29					
30					
31					
32					
33					
34					
35					

Tables

This page intentionally left blank

TABLE 1 FIELD APPLICATION OF UNIFIED SOIL CLASSIFICATION SYSTEM

Description Order:

(Depth Interval) Color (Munsell); Moisture; Principal components with descriptors; Minor Components with descriptors; Sorting; Density/Consistency

Separate each description using a semicolon; *Constituents should be capitalized (i.e., SILT, CLAY, SAND, etc.)*

Moisture:	**Dry** – Absence of moisture, dry to touch, dusty.	**Moist** – No visible moisture, not dry.	**Wet** – Visible free water (typically saturated).

Minor Component Percentages: 0-10% *(Trace)*; 10-20% *(Little)*; 20-35% *(Some)*; 36-50% *(And)*.

COARSE-GRAINED SOILS

Symbol	***Grain Size***	***Primary***	***Fines***	***Grading***	***Clean/Fines***	***Description***
GW	Coarse	Gravels	Little-None	Well	Clean	Well graded gravels, gravel-sand mixtures, or sand-gravel-cobble mixtures.
GP	Coarse	Gravels	Little-None	Poor	Clean	Poorly graded gravels, gravel-sand mixtures, or sand-gravel-cobble mixtures.
GM	Coarse	Gravels	Some Silt	Poor	Fines	Silty gravels, gravel-sand-silt mixtures.
GC	Coarse	Gravels	Some Clay	Poor	Fines	Clayey gravels, gravel-sand-clay mixtures.
SW	Coarse	Sands	Little-None	Well	Clean	Well graded sands, gravelly sands.
SP	Coarse	Sands	Little-None	Poor	Clean	Poorly graded sands, gravelly sands.
SM	Coarse	Sands	Some Silt	Poor	Fines	Silty sands, sand-silt mixtures.
SC	Coarse	Sands	Some Clay	Poor	Fines	Clayey sands, sand-clay mixtures.

Density:	Very Loose	N<4	Loose	5<N<10	Medium Dense	11<N<30	Dense	30<N<50	Very Dense	50<N

FINE-GRAINED SOILS

Symbol	***Grain Size***	***Primary***	***Strength***	***Dilatency***	***Plasticity***	***Consistency***	***Description***
ML	Fine	Silt	None-Slight	Slow Quick	Low	V. Soft-Soft	Inorganic silts, clayey silts of low-med plasticity.
CL	Fine	Clay	Med-High	None V. Slow	Low	M. Stiff-Stiff	Inorganic clays of low-med plasticity (gravelly/sandy/silty clays).
MH	Fine	Organic	Slight-Med	Slow Quick	Low	Soft-M. Stiff	Inorganic silts, micaceous/diatomaceous silty soils, elastic silts.
OL	Fine	Organic	Slight-Med	None Slow	Low	Soft-Stiff	Organic silts/clays of low-med plasticity, sandy organic silts/clays.
CH	Fine	Clay	High-V.High	None	High	Stiff-Hard	Inorganic or sandy clays of high plasticity, fat clays.
OH	Fine	Organic	Med-High	None V. Slow	High	M. Stiff-Hard	Organic silts/clays of high plasticity; sandy organic silts/clays.
Pt	Fine	Peat	Odor and spongy and fibrous texture			Not Applicable	Peat.

Plasticity:

Non-	3-millimeter thread cannot be rolled at any moisture content.
Low	Thread barely rolled; lump cannot form below plastic limit.
Med-	Barely able to be rolled; lump cannot form below plastic limit.
High	Thread is easy to roll; lump formed without crumbling.

Consistency:

Very Soft	N<2	Easily penetrated several inches by thumb.
Soft	2<N<4	Easily penetrated 1 inch by thumb.
Medium Stiff	5<N<8	Thumb penetrates 0.5 inches with difficulty.
Stiff	9<N<15	Thumb penetrates 0.25 inches with difficulty.
Very Stiff	16<N<30	Indented readily by thumbnail.
Hard	30<N	Indented with difficulty by thumbnail.

Dilatency:

None	Water not observed when shaken/squeezed.
Slow	Water appears/disappears slowly when shaken/squeezed.
Rapid	Water appears/disappears quickly when shaken/squeezed.

Examples:

(10-20) Brown (7.5YR 4/3); moist; SILT little SAND and CLAY; non-plastic; soft; well graded.	*ML*
(20-30) Strong Brown (7.5YR 5/6); dry; fine SAND; dense; well graded.	*SW*

This page intentionally left blank

TABLE 2 COMPARISON OF GRAIN SIZE SCALES FOR SEDIMENTS

Grade Limits		U.S. Standard Sieve Sizes	Grain Size Classification System				
Millimeters (mm)	Inches		Modified Wentworth			Unified Soil Classification System	
4096	161.3	---	Very large	Boulders	Gravel	Boulders (greater than 300 mm)	
2048	80.6	---	Large				
1024	40.3	---	Medium				
512	20.2	---	Small				
256	10.1	---				Cobbles (75-300 mm)	
128	5.0	---	Large	Cobbles			
			Small				
64	2.52	63 mm	Very Coarse	Pebbles		Coarse Gravel (19-75 mm)	Gravel (4.75 mm No. 4 sieve to 75 mm)
32	1.26	31.5 mm	Coarse			Fine Gravel (4.75 mm No. 4 sieve to 19 mm)	
16	0.63	16 mm	Medium				
8	0.32	8 mm	Fine				
4	0.16	No. 5	Very Fine			Coarse Sand (2.0 mm No. 10 sieve to 4.75 mm No. 4 sieve)	Sand (0.075 mm No. 200 sieve to 4.75 mm No. 4 sieve)
2	0.08	No. 10	Very Coarse	Sand	Sand		
1	0.04	No. 18	Coarse			Medium Sand (0.425 mm No. 40 sieve to 2.0 mm No. 10 Sieve)	
1/2 or 0.500	---	No. 35	Medium				
1/4 or 0.250	---	No. 60	Fine			Fine Sand (0.075 mm No. 200 sieve to 0.425 mm No. 40 sieve)	
1/8 or 0.125	---	No. 120					
1/16 or 0.062	---	No. 230	Very fine			Silt (no specific grain size use Atterberg Limits)	Fines (less than 0.075 mm No. 200 sieve)
1/32 or 0.031	---	---	Coarse	Silt	Mud		
1/64 or 0.016	---	---	Medium				
1/128 or 0.008	---	---	Fine				
1/256 or 0.004	---	---	Very Fine				

Grade Limits		U.S. Standard Sieve Sizes	Grain Size Classification System				
Millimeters (mm)	Inches		Modified Wentworth			Unified Soil Classification System	
			Coarse	Clay Size		Clay (no specific grain size use Atterberg Limits)	
1/512 or 0.002	---	---					
			Medium				
1/1024or 0.001	---	---					
			Fine				
1/2048 or 0.0005	---	---					
			Very Fine				
1/4096 or 0.00025	---	---					

Attachment A

Equipment that May Be Required for Core Logging

This page intentionally left blank

ATTACHMENT A

EQUIPMENT THAT MAY BE REQUIRED FOR CORE LOGGING

- Sample Location Coordinates and Figure
- Safety Equipment
- Global Positioning System
- Pencil
- Log of Core Boring Forms
- Notebook
- Hand lens
- Geologist's pick
- Knife
- Needle
- Magnet
- Core splitter
- Ruler (graduated in tenths of a foot)
- Steel tape (graduated in tenths of a foot)
- Tape recorder
- Camera
- Clinometer/protractor
- Waterproof marking pen (for core boxes)
- Assisting muscle power (to move core boxes)

This page intentionally left blank

Attachment B

Checklist for Sediment Boring Log

This page intentionally left blank

ATTACHMENT B

CHECKLIST FOR SEDIMENT BORING LOGS[1]

The Sediment Boring Log should include the following items:

- Project Name/Number
- Project Location
- Client
- Date/Time Collected
- Drilling/Sampling Contractor (Company and name of Team Member)
- Drilling/Sampling Equipment
- Drilling/Sampling Method
- Person completing the log
- Sample Coordinates
- Sediment Surface Elevation
- Surface Conditions
- Water Depth
- Penetration Depth
- Sample Recovery Depth
- Field Measurements (collected during boring)
- Information as to location and possible cause of core losses
- Details of delays and breakdowns
- For Drilling Only

  — Date and depth of sample/hole at start and end of working day or shift
  — Depth of start and finish of each core run
  — Depth and size of any casing at start and end of each core run
  — Core diameter and changes in core size
  — Type and condition of bit
  — Start and stop time of each core run
  — Time and description of interruptions in coring
  — Depths of changes in coring rate
  — Gain or loss of water, mud, or air flush; type of cuttings
  — Standing water level at start and end of each working period
  — Backfilling and grouting

[1] This list excludes any special items that may be required for contractual record purposes or for special engineering tests (e.g., Project Plan).

This page intentionally left blank

Attachment C

Unified Soil Classification System
Field Identification Procedures for
Fine-Grained Sediments/Soils or Fractions

This page intentionally left blank

ATTACHMENT C

UNIFIED SOIL CLASSIFICATION SYSTEM FIELD IDENTIFICATION PROCEDURES FOR FINE-GRAINED SEDIMENTS/SOILS OR FRACTIONS

These procedures are to be performed on the minus No. 40 sieve size particles, approximately 1/64 inches. For field classification purposes, screening is not intended; simply remove by hand the coarse particles that interfere with the tests.

DRY STRENGTH (CRUSHING CHARACTERISTICS)

After removing particles larger than No. 40 sieve size, mold a pat of soil/sediment to the consistency of putty, adding water if necessary. Allow the pat to dry completely by oven, sun, or air drying, and then test its strength by breaking and crumbling between the fingers. This strength is a measure of the character and quantity of the colloidal fraction contained in the soil/sediment. The dry strength increases with increasing plasticity.

High dry strength is characteristic for clays of the CH group. A typical inorganic silt possesses only very slight dry strength. Silty fine sands and silts have about the same slight dry strength, but can be distinguished by the feel when powdering the dry specimen. Fine sand feels gritty, whereas a typical silt has the smooth texture of flour.

Calcium carbonate or iron oxides may cause higher dry strength in dried material. If acid causes a fizzing reaction, calcium carbonate is present

DILATANCY (REACTION TO SHAKING)

After removing particles larger than No. 40 sieve size, prepare a pat of moist soil/sediment with a volume of approximately 0.5 cubic inches. Add enough water if necessary to make the soil/sediment soft but not sticky.

Place the pat in the open palm of one hand and shake horizontally, striking vigorously against the other hand several times. A positive reaction consists of the appearance of water on the surface of the pat that changes to a livery consistency and becomes glossy. When the sample is squeezed between the fingers, the water and gloss disappear from the surface, the pat stiffens, and finally it cracks or crumbles. The rapidity of appearance of water during shaking and of its disappearance during squeezing assist in identifying the character of the fines in a soil/sediment.

Very fine clean sands give the quickest and most distinct reaction, whereas a plastic clay has no reaction. Inorganic silts, such as a typical rock flour, show a moderately quick reaction.

TOUGHNESS (CONSISTENCY NEAR PLASTIC LIMIT)

After removing particles larger than No. 40 sieve size, a specimen of soil approximately 0.5 cubic inches is molded to the consistency of putty. If too dry, water must be added and, if sticky, the specimen should be spread out in a thin layer and allowed to lose some moisture by evaporation. The specimen is then rolled out by hand on a smooth surface or between the palms, into a thread about one-eighth inch in diameter. The thread is then folded and rerolled

ED_004144A_00000101-00922

repeatedly. During this manipulation, the moisture content is gradually reduced and the specimen stiffens, finally loses its plasticity, and crumbles when the plastic limit is reached.

After the thread crumbles, the pieces should be lumped together and a slight kneading action continued until the lump crumbles.

The tougher the thread near the plastic limit and the stiffer the lump when it finally crumbles, the more potent is the colloidal clay fraction in the soil/sediment. Weakness of the thread at the plastic limit and quick loss of coherence of the lump below the plastic limit indicate either inorganic clay or low plasticity, or materials such as kaolin-type clays and organic clays that occur below the A-line.

Highly organic clays have a very weak and spongy texture at the plastic limit.

Non-plastic soils cannot be rolled into a thread at any moisture content.

The toughness increases with the Plasticity Index.

ED_004144A_00000101-00923

Attachment D

Unified Soil Classification System

This page intentionally left blank

ATTACHMENT D

UNIFIED SOIL CLASSIFICATION SYSTEM

Field Classification				Symbol				Symbol
COARSE-GRAINED SOILS More than half of material (by weight) is of individual grains visible to the naked eye	GRAVEL AND GRAVELLY SOILS More than half of coarse fraction (by weight) is larger than 0.25-in. size		CLEAN GRAVELS Will not leave a dirt stain on a wet palm	Wide range in grain sizes and substantial amounts of all intermediate particle sizes				GW
				Predominantly one size or range of sizes with some intermediate sizes missing				GP
			DIRTY GRAVELS Will leave a dirt stain on a wet palm	Non-plastic fines or fines with low plasticity (for identification of fines, see characteristics of CL below)				GM
				Plastic fines (for identification of fines, see characteristics of CL below)				GC
FINE-GRAINED SOILS More than half of material (by weight) is of individual grains not visible to the naked eye	SAND AND SANDY SOIULS More than half of coarse fraction (by weight) is smaller than 0.25-in. size		CLEAN SANDS Will not leave a dirt stain on a wet palm	Wide range in grain size and substantial amounts of all intermediate particle sizes missing				SW
				Predominantly one size or a range of sizes with some intermediate sizes missing				SP
No. 200 sieve size is about the smallest particle visible to the naked eye	For visual classification, the 0.25-in. size may be used as equivalent to the No. 4 sieve size		DIRTY SANDS Will leave a dirt stain on a wet palm	Non-plastic fines or fines with low plasticity (for identification of fines, see characteristics of ML below)				SM
				Plastic fines (for identification, see characteristics of CL below)				SC
	SILTS AND CLAYS (low plastics)		Slight	Rapid	Low to none	None	Dull	ML
			High	Medium to None	Medium	Weak	Slight to shiny	CL
		Pronounced	Medium	Slow to none	Low	None		

ED_004144A_00000101-00926

Field Classification				Symbol				Symbol
	SILTS AND CLAYS (highly plastic)	ODOR Pronounced	DRY CRUSHING STRENGTH Medium	DILATANCY (SHAKE) Very slow to none	TOUGHNESS Medium	RIBBON (near the plastic limit) Weak	SHINE (near the plastic limit) Dull to slight	OL
			Very High	None	High	Strong	Slight	MH
			High	None	Low to medium	Weak	Shiny	CH
							Dull to Slight	OH
HIGHLY ORGANIC SOILS				Readily identified by color, order, spongy feel, and frequently by fibrous texture.				Pt

ED_004144A_00000101-00927

TABLE D-1 CRITERIA FOR DESCRIBING DRY STRENGTH

Description	Criteria
None	The dry specimen crumbles into powder with mere pressure of handling.
Low	The dry specimen crumbles into powder with some finger pressure.
Medium	The dry specimen breaks into pieces or crumbles with considerable finger pressure.
High	The dry specimen cannot be broken with finger pressure. Specimen will break into pieces between the thumb and a hard surface.
Very High	The dry specimen cannot be broken between the thumb and a hard surface.

TABLE D-2 CRITERIA FOR DESCRIBING DILATANCY

Description	Criteria
None	No visible change in the specimen.
Slow	Water appears slowly on the surface of the specimen during shaking and does not disappear or disappears slowly upon squeezing.
Rapid	Water appears quickly on the surface on the specimen during shaking and disappears quickly upon squeezing.

TABLE D-3 CRITERIA FOR DESCRIBING TOUGHNESS

Description	Criteria
Low	Only slight pressure is required to roll the thread near the plastic limit. The thread and lump are weak and soft.
Medium	Medium pressure is required to roll the thread to near the plastic limit. The thread and the lump have medium stiffness.
High	Considerable pressure is required to roll the thread to near the plastic limit. The thread and lump have very high stiffness.

TABLE D-4 CRITERIA FOR DESCRIBING PLASTICITY

Description	Criteria
Non-Plastic	A 1/8-inch (3-millimiter) thread cannot be rolled at any water content.
Low	The thread can barely be rolled and the lump cannot be formed when drier than the plastic limit.
Medium	The thread is easy to roll and not much time is required to reach the plastic limit. The thread cannot be re-rolled after reaching the plastic limit. The lump crumbles when drier than the plastic limit.
High	It takes considerable time rolling and kneading to reach the plastic limit. The thread can be re-rolled several times after reaching the plastic limit. The lump can be formed without crumbling when drier than the plastic limit.

TABLE D-5 IDENTIFICATION OF INORGANIC FINE-GRAINED SEDIMENTS/SOILS FROM MANUAL TESTS

Soil Symbol	Dry Strength	Dilatancy	Touch
ML	None to low	Slow to rapid	Low or thread cannot be formed
CL	Medium to high	None to slow	Medium
MH	Low to medium	None to slow	Low to medium
CH	High to very high	None	High

ED_004144A_00000101-00928

This page intentionally left blank

ED_004144A_00000101-00929

Appendix D

Screening Values

Table D-1A. Screening Criteria for Soil and CLP Reference Limits

Analyte	Analytical Method	CASRN	Units	Soil Screening Level						Project Screening Level[5]	CRQL [6]		
				EPA Regional Screening Level [1]			Ecological Screening Level [2]						
				c/nc	Residential	Industrial	Lowest RAIS Screening Value [3]	EPA Eco-SSL Lowest Value [4]	EPA Eco-SSL Additional Value [4]		Low Soil by SIM	Low Soil	Medium Soil
Volatile Organic Compounds (VOCs)													
1,1,1-Trichloroethane	SOM02.4	71-55-6	mg/kg	ns	8,100	36,000	0.07	NS	NS	0.07	--	0.005	0.25
1,1,2-Trichloro-1,2,2-trifluoroethane	SOM02.4	76-13-1	mg/kg	ns	6,700	28,000	NS	NS	NS	6,700	--	0.005	0.25
1,1,2,2-Tetrachloroethane	SOM02.4	79-34-5	mg/kg	c	0.6	2.7	0.127	NS	NS	0.127	--	0.005	0.25
1,1,2-Trichloroethane	SOM02.4	79-00-5	mg/kg	n	1.1	5	0.4	NS	NS	0.4	--	0.005	0.25
1,1-Dichloroethane	SOM02.4	75-34-3	mg/kg	c	3.6	16	0.02	NS	NS	0.02	--	0.005	0.25
1,1-Dichloroethene	SOM02.4	75-35-4	mg/kg	n	230	1,000	0.1	NS	NS	0.1	--	0.005	0.25
1,2,3-Trichlorobenzene	SOM02.4	87-61-6	mg/kg	n	63	930	0.01	NS	NS	0.01	--	0.005	0.25
1,2,4-Trichlorobenzene	SOM02.4	120-82-1	mg/kg	n	24	110	0.01	NS	NS	0.01	--	0.005	0.25
1,2-Dibromo-3-chloropropane	SOM02.4	96-12-8	mg/kg	c	0.0053	0.064	0.035	NS	NS	0.0053	--	0.005	0.25
1,2-Dibromoethane (EDB)	SOM02.4	106-93-4	mg/kg	c	0.036	0.16	1.23	NS	NS	0.036	--	0.005	0.25
1,2-Dibromoethane (EDB)	SOM02.4	106-93-4	mg/kg	c	0.036	0.16	1.23	NS	NS	0.036	--	--	--
1,2-Dichlorobenzene	SOM02.4	95-50-1	mg/kg	ns	1,800	9,300	0.01	NS	NS	0.01	--	0.005	0.25
1,2-Dichloroethane	SOM02.4	107-06-2	mg/kg	c*	0.46	2	0.02	NS	NS	0.02	--	0.005	0.25
1,2-Dichloropropane	SOM02.4	78-87-5	mg/kg	c*	2.8	1.2	0.002	NS	NS	0.002	--	0.005	0.25
1,3-Dichlorobenzene	SOM02.4	541-73-1	mg/kg	ns	1,800	9,300	0.03	NS	NS	0.03	--	0.005	0.25
1,4-Dichlorobenzene	SOM02.4	106-46-7	mg/kg	c	2.6	11	0.01	NS	NS	0.01	--	0.005	0.25
2-Butanone (Methyl ethyl ketone)	SOM02.4	78-93-3	mg/kg	n	27,000	190,000	35	NS	NS	35	--	0.01	0.5
2-Hexanone	SOM02.4	591-78-6	mg/kg	n	200	1,300	12.6	NS	NS	12.6	--	0.01	0.5
4-Methyl-2-pentanone (Methyl-isobutyl ketone)	SOM02.4	108-10-1	mg/kg	ns	33,000	140,000	443	NS	NS	443	--	0.01	0.5
Acetone	SOM02.4	67-64-1	mg/kg	n	61,000	670,000	2.5	NS	NS	2.5	--	0.01	0.5
Benzene	SOM02.4	71-43-2	mg/kg	c*	1.2	5.1	0.01	NS	NS	0.01	--	0.005	0.25
Bromochloromethane	SOM02.4	74-97-5	mg/kg	n	150	630	NS	NS	NS	150	--	0.005	0.25
Bromodichloromethane	SOM02.4	75-27-4	mg/kg	c	0.29	1.3	0.54	NS	NS	0.29	--	0.005	0.25
Bromoform	SOM02.4	75-25-2	mg/kg	c*	19	86	15.9	NS	NS	15.9	--	0.005	0.25
Bromomethane	SOM02.4	74-83-9	mg/kg	n	6.8	30	0.235	NS	NS	0.235	--	0.005	0.25
Carbon Disulfide	SOM02.4	75-15-0	mg/kg	ns	770	3,500	0.094	NS	NS	0.094	--	0.005	0.25
Carbon Tetrachloride	SOM02.4	56-23-5	mg/kg	c	0.65	2.9	0.4	NS	NS	0.4	--	0.005	0.25
Chlorobenzene	SOM02.4	108-90-7	mg/kg	n	280	1,300	0.03	NS	NS	0.03	--	0.005	0.25
Chloroethane	SOM02.4	75-00-3	mg/kg	ns	14,000	57,000	NS	NS	NS	14,000	--	0.005	0.25
Chloroform	SOM02.4	67-66-3	mg/kg	c	0.32	1.4	0.001	NS	NS	0.001	--	0.005	0.25
Chloromethane	SOM02.4	74-87-3	mg/kg	n	110	460	10.4	NS	NS	10.4	--	0.005	0.25
cis-1,2-Dichloroethene	SOM02.4	156-59-2	mg/kg	n	160	2,300	NS	NS	NS	160	--	0.005	0.25
cis-1,3-Dichloropropene [7]	SOM02.4	10061-01-5	mg/kg	c*	1.8	8.2	0.398	NS	NS	0.398	--	0.005	0.25
Cyclohexane	SOM02.4	110-82-7	mg/kg	ns	6,500	27,000	NS	NS	NS	6,500	--	0.005	0.25
Dibromochloromethane	SOM02.4	124-48-1	mg/kg	c	8.3	39	2.05	NS	NS	2.05	--	0.005	0.25
Dichlorodifluoromethane	SOM02.4	75-71-8	mg/kg	n	87	370	39.5	NS	NS	39.5	--	0.005	0.25
Ethylbenzene	SOM02.4	100-41-4	mg/kg	c	5.8	25	0.03	NS	NS	0.03	--	0.005	0.25
Hexachlorobutadiene	SOM02.4	87-68-3	mg/kg	c*	1.2	5.3	0.04	NS	NS	0.04	--	--	--
Isopropylbenzene (Cumene)	SOM02.4	98-82-8	mg/kg	ns	1,900	9,900	NS	NS	NS	1,900	--	0.005	0.25
Methyl Acetate	SOM02.4	79-20-9	mg/kg	ns	78,000	1,200,000	NS	NS	NS	78,000	--	0.005	0.25
Methylcyclohexane	SOM02.4	108-87-2	mg/kg	ns	6,500	27,000	NS	NS	NS	6,500	--	0.005	0.25
Methyl tert Butyl Ether	SOM02.4	1634-04-4	mg/kg	c	47	210	100	NS	NS	47	--	0.005	0.25
Methylene Chloride	SOM02.4	75-09-2	mg/kg	n	57	1,000	0.4	NS	NS	0.4	--	0.005	0.25
Styrene	SOM02.4	100-42-5	mg/kg	ns	6,000	35,000	0.1	NS	NS	0.1	--	0.005	0.25
Tetrachloroethene	SOM02.4	127-18-4	mg/kg	n	24	100	0.002	NS	NS	0.002	--	0.005	0.25
Toluene	SOM02.4	108-88-3	mg/kg	ns	4,900	47,000	0.01	NS	NS	0.01	--	0.005	0.25
trans-1,2-Dichloroethene	SOM02.4	156-60-5	mg/kg	n	1,600	23,000	0.784	NS	NS	1	--	0.005	0.25
trans-1,3-Dichloropropene [7]	SOM02.4	10061-02-6	mg/kg	c*	1.8	8.2	0.398	NS	NS	0.398	--	0.005	0.25
Trichloroethene	SOM02.4	79-01-6	mg/kg	n	0.94	6	0.001	NS	NS	0.001	--	0.005	0.25
Trichlorofluoromethane	SOM02.4	75-69-4	mg/kg	ns	23,000	350,000	16.4	NS	NS	16.4	--	0.005	0.25
Vinyl Chloride	SOM02.4	75-01-4	mg/kg	c	0.059	1.7	0.01	NS	NS	0.01	--	0.005	0.25

Table D-1A. Screening Criteria for Soil and CLP Reference Limits

Analyte	Analytical Method	CASRN	Units	Soil Screening Level						Project Screening Level[5]	CRQL [6]		
				EPA Regional Screening Level [1]			Ecological Screening Level [2]						
				c/nc	Residential	Industrial	Lowest RAIS Screening Value [3]	EPA Eco-SSL Lowest Value [4]	EPA Eco-SSL Additional Value [4]		Low Soil by SIM	Low Soil	Medium Soil
m,p-Xylene	SOM02.4	179601-23-1	mg/kg	ns	580	2,500	0.1	NS	NS	0.1	--	0.005	0.25
o-Xylene	SOM02.4	95-47-6	mg/kg	ns	650	2,800	0.1	NS	NS	0.1	--	0.005	0.25
Semivolatile Organic Compounds (SVOCs)													
1,1'-Biphenyl	SOM02.4	92-52-4	mg/kg	n	47	200	60	NS	NS	47	--	0.17	5
1,2,4,5-Tetrachlorobenzene	SOM02.4	95-94-3	mg/kg	n	23	350	0.01	NS	NS	0.01	--	0.17	5
1,4-Dioxane	SOM02.4	123-91-1	mg/kg	c	5.3	24	2.05	NS	NS	2.05	--	0.067	2
2,2'-Oxybis (1-chloropropane)	SOM02.4	108-60-1	mg/kg	ns	3,100	47,000	19.9	NS	NS	19.9	--	0.33	10
2,3,4,6-Tetrachlorophenol	SOM02.4	58-90-2	mg/kg	n	1,900	25,000	0.01	NS	NS	0.01	--	0.17	5
2,4,5-Trichlorophenol	SOM02.4	95-95-4	mg/kg	n	6,300	82,000	0.01	NS	NS	0.01	--	0.17	5
2,4,6-Trichlorophenol	SOM02.4	88-06-2	mg/kg	n	49	210	0.01	NS	NS	0.01	--	0.17	5
2,4-Dichlorophenol	SOM02.4	120-83-2	mg/kg	n	190	2,500	0.01	NS	NS	0.01	--	0.17	5
2,4-Dimethylphenol	SOM02.4	105-67-9	mg/kg	n	1,300	16,000	0.01	NS	NS	0.01	--	0.17	5
2,4-Dinitrophenol	SOM02.4	51-28-5	mg/kg	n	130	1,600	0.0609	NS	NS	0.0609	--	0.33	10
2,4-Dinitrotoluene	SOM02.4	121-14-2	mg/kg	c*	1.7	7.4	1.28	NS	NS	1.28	--	0.17	5
2,6-Dinitrotoluene	SOM02.4	606-20-2	mg/kg	c*	0.36	1.5	0.033	NS	NS	0.033	--	0.17	5
2-Chloronaphthalene	SOM02.4	91-58-7	mg/kg	n	4,800	60,000	0.012	NS	NS	0.012	--	0.17	5
2-Chlorophenol	SOM02.4	95-57-8	mg/kg	n	390	5,800	0.01	NS	NS	0.01	--	0.17	5
2-Methylnaphthalene	SOM02.4	91-57-6	mg/kg	n	240	3,000	3.24	29	LMW-PAH based on soil invertebrates (100 for mammalian)	3.24	0.0033	0.17	5
2-Methylphenol	SOM02.4	95-48-7	mg/kg	n	3,200	41,000	0.5	NS	NS	0.5	--	0.33	10
2-Nitroaniline	SOM02.4	88-74-4	mg/kg	n	630	8,000	74.1	NS	NS	74.1	--	0.17	5
2-Nitrophenol	SOM02.4	88-75-5	mg/kg	c	NS	NS	1.6	NS	NS	1.6	--	0.17	5
3,3'-Dichlorobenzidine	SOM02.4	91-94-1	mg/kg	c	1.2	5.1	0.646	NS	NS	0.646	--	0.33	10
3-Nitroaniline	SOM02.4	99-09-2	mg/kg	nc	NS	NS	3.16	NS	NS	3.16	--	0.33	10
4,6-Dinitro-2-methylphenol (4,6-Dinitro-o-cresol)	SOM02.4	534-52-1	mg/kg	n	5.1	66	0.144	NS	NS	0.144	--	0.33	10
4-Bromophenyl-phenylether	SOM02.4	101-55-3	mg/kg	-	NS	NS	NS	NS	NS	NS	--	0.17	5
4-Chloro-3-methylphenol	SOM02.4	59-50-7	mg/kg	n	6,300	82,000	7.95	NS	NS	7.95	--	0.17	5
4-Chloroaniline	SOM02.4	106-47-8	mg/kg	c*	2.7	11	0.03	NS	NS	0.03	--	0.33	10
4-Chlorophenyl-phenylether	SOM02.4	7005-72-3	mg/kg	-	NS	NS	NS	NS	NS	NS	--	0.17	5
4-Methylphenol	SOM02.4	106-44-5	mg/kg	n	6,300	82,000	0.05	NS	NS	0.05	--	0.33	10
4-Nitroaniline	SOM02.4	100-01-6	mg/kg	n	27	110	21.9	NS	NS	21.9	--	0.33	10
4-Nitrophenol	SOM02.4	100-02-7	mg/kg	c	NS	NS	5.12	NS	NS	5.12	--	0.33	10
Acenaphthene	SOM02.4	83-32-9	mg/kg	n	3,600	45,000	20	29	LMW-PAH based on soil invertebrates (100 for mammalian)	20.0	0.0033	0.17	5
Acetophenone	SOM02.4	98-86-2	mg/kg	ns	7,800	120,000	300	NS	NS	300	--	0.33	10
Acenaphthylene	SOM02.4	208-96-8	mg/kg	n	3,600	45,000	682	29	LMW-PAH based on soil invertebrates (100 for mammalian)	29.0	0.0033	0.17	5
Anthracene	SOM02.4	120-12-7	mg/kg	n	18,000	230,000	0.1	29	LMW-PAH based on soil invertebrates (100 for mammalian)	0.1	0.0033	0.17	5
Atrazine	SOM02.4	1912-24-9	mg/kg	c	2.4	10	0.00005	NS	NS	0.00005	--	0.33	10
Benzaldehyde	SOM02.4	100-52-7	mg/kg	ns	7,800	120,000	NS	NS	NS	7,800	--	0.33	10
Benzo(a)anthracene	SOM02.4	56-55-3	mg/kg	c	1.1	21	5.21	1.1	HMW-PAH based on mammalian receptors (18 for soil invertebrates)	1.1	0.0033	0.17	5
Benzo(a)pyrene	SOM02.4	50-32-8	mg/kg	c	0.11	2.1	0.1	1.1	HMW-PAH based on mammalian receptors (18 for soil invertebrates)	0.1	0.0033	0.17	5
Benzo(b)fluoranthene	SOM02.4	205-99-2	mg/kg	c	1.1	21	59.8	1.1	HMW-PAH based on mammalian receptors (18 for soil invertebrates)	1.1	0.0033	0.17	5
Benzo(g,h,i)perylene	SOM02.4	191-24-2	mg/kg	n	1,800	23,000	119	1.1	HMW-PAH based on mammalian receptors (18 for soil invertebrates)	1.1	0.0033	0.17	5
Benzo(k)fluoranthene	SOM02.4	207-08-9	mg/kg	c	11	210	148	1.1	HMW-PAH based on mammalian receptors (18 for soil invertebrates)	1.1	0.0033	0.17	5
bis(2-Chloroethoxy)methane	SOM02.4	111-91-1	mg/kg	n	190	2,500	0.302	NS	NS	0.302	--	0.17	5
bis(2-Chloroethyl)ether	SOM02.4	111-44-4	mg/kg	c	0.23	1	23.7	NS	NS	0.23	--	0.33	10
bis(2-Ethylhexyl)phthalate	SOM02.4	117-81-7	mg/kg	c*	39	160	0.1	NS	NS	0.1	--	0.17	5
Butylbenzylphthalate	SOM02.4	85-68-7	mg/kg	c*	290	1,200	0.1	NS	NS	0.1	--	0.17	5
Caprolactam	SOM02.4	105-60-2	mg/kg	n	31,000	400,000	NS	NS	NS	31,000	--	0.33	10
Carbazole	SOM02.4	86-74-8	mg/kg	-	NS	NS	NS	NS	NS	NS	--	0.33	10
Chrysene	SOM02.4	218-01-9	mg/kg	c	110	2,100	4.73	1.1	HMW-PAH based on mammalian receptors (18 for soil invertebrates)	1.1	0.0033	0.17	5
Di-n-butylphthalate	SOM02.4	84-74-2	mg/kg	n	6,300	82,000	0.1	NS	NS	0.1	--	0.17	5
Di-n-octylphthalate	SOM02.4	117-84-0	mg/kg	n	630	8,200	0.1	NS	NS	0.1	--	0.33	10
Dibenz(a,h)anthracene	SOM02.4	53-70-3	mg/kg	c	0.11	2.1	18.4	1.1	HMW-PAH based on mammalian receptors (18 for soil invertebrates)	0.11	0.0033	0.17	5
Dibenzofuran	SOM02.4	132-64-9	mg/kg	n	73	1,000	NS	NS	NS	73	--	0.17	5
Diethylphthalate	SOM02.4	84-66-2	mg/kg	n	51,000	660,000	0.1	NS	NS	0.1	--	0.17	5
Dimethylphthalate	SOM02.4	131-11-3	mg/kg	-	NS	NS	0.1	NS	NS	0.1	--	0.17	5
Fluoranthene	SOM02.4	206-44-0	mg/kg	n	2,400	30,000	0.1	1.1	HMW-PAH based on mammalian receptors (18 for soil invertebrates)	0.1	0.0033	0.33	10

Table D-1A. Screening Criteria for Soil and CLP Reference Limits

Analyte	Analytical Method	CASRN	Units	Soil Screening Level						Project Screening Level[5]	CRQL [6]		
				EPA Regional Screening Level [1]			Ecological Screening Level [2]						
				c/nc	Residential	Industrial	Lowest RAIS Screening Value [3]	EPA Eco-SSL Lowest Value [4]	EPA Eco-SSL Additional Value [4]		Low Soil by SIM	Low Soil	Medium Soil
Fluorene	SOM02.4	86-73-7	mg/kg	n	2,400	30,000	30	29	LMW-PAH based on soil invertebrates (100 for mammalian)	29	0.0033	0.17	5
Hexachlorobenzene	SOM02.4	118-74-1	mg/kg	c	0.21	0.96	0.0025	NS	NS	0.0025	--	0.17	5
Hexachlorobutadiene	SOM02.4	87-68-3	mg/kg	c*	1.2	5.3	0.04	NS	NS	0.04	--	0.17	5
Hexachlorocyclopentadiene	SOM02.4	77-47-4	mg/kg	n	1.8	7.5	0.755	NS	NS	0.755	--	0.33	10
Hexachloroethane	SOM02.4	67-72-1	mg/kg	c*	1.8	8	0.596	NS	NS	0.596	--	0.17	--
Indeno(1,2,3-cd)pyrene	SOM02.4	193-39-5	mg/kg	c	1.1	21	109	1.1	HMW-PAH based on mammalian receptors (18 for soil invertebrates)	1.1	0.0033	0.17	5
Isophorone	SOM02.4	78-59-1	mg/kg	c*	570	2,400	139	NS	NS	139	--	0.17	5
N-Nitroso-di-n-propylamine	SOM02.4	621-64-7	mg/kg	c	0.078	0.33	0.544	NS	NS	0.078	--	0.17	5
N-Nitrosodiphenylamine	SOM02.4	86-30-6	mg/kg	c	110	470	0.545	NS	NS	0.545	--	0.17	5
Naphthalene	SOM02.4	91-20-3	mg/kg	c*	3.8	17	0.099	29	LMW-PAH based on soil invertebrates (100 for mammalian)	0.099	0.0033	0.17	5
Nitrobenzene	SOM02.4	98-95-3	mg/kg	c*	5.1	22	1.31	NS	NS	1.31	--	0.17	5
Pentachlorophenol	SOM02.4	87-86-5	mg/kg	c	1	4	0.002	2.1	Based on avian receptors (2.8 for mammalian, 5.0 for plants, 31 for soil invertebrates)	0.002	0.0067	0.33	10
Phenanthrene	SOM02.4	85-01-8	mg/kg	n	1,800	23,000	0.1	29	LMW-PAH based on soil invertebrates (100 for mammalian)	0.1	0.0033	0.17	5
Phenol	SOM02.4	108-95-2	mg/kg	n	19,000	250,000	0.05	NS	NS	0.05	--	0.33	10
Pyrene	SOM02.4	129-00-0	mg/kg	n	1,800	23,000	0.1	1.1	HMW-PAH based on mammalian receptors (18 for soil invertebrates)	0.1	0.0033	0.17	5
Polycyclic Aromatic Hydrocarbons (PAHs)													
Acenaphthene	SOM02.4	83-32-9	mg/kg	n	3,600	45,000	20	29	LMW-PAH based on soil invertebrates (100 for mammalian)	20	0.0033	0.17	5
Acenaphthylene	SOM02.4	208-96-8	mg/kg	n	3,600	45,000	682	29	LMW-PAH based on soil invertebrates (100 for mammalian)	29	0.0033	0.17	5
Anthracene	SOM02.4	120-12-7	mg/kg	n	18,000	230,000	0.1	29	LMW-PAH based on soil invertebrates (100 for mammalian)	0.1	0.0033	0.17	5
Benzo(a)anthracene	SOM02.4	56-55-3	mg/kg	c	1.1	21	5.21	1.1	HMW-PAH based on mammalian receptors (18 for soil invertebrates)	1.1	0.0033	0.17	5
Benzo(a)pyrene	SOM02.4	50-32-8	mg/kg	c	0.11	2.1	0.1	1.1	HMW-PAH based on mammalian receptors (18 for soil invertebrates)	0.1	0.0033	0.17	5
Benzo(b)fluoranthene	SOM02.4	205-99-2	mg/kg	c	1.1	21	59.8	1.1	HMW-PAH based on mammalian receptors (18 for soil invertebrates)	1.1	0.0033	0.17	5
Benzo(g,h,i)perylene	SOM02.4	191-24-2	mg/kg	n	1,800	23,000	119	1.1	HMW-PAH based on mammalian receptors (18 for soil invertebrates)	1.1	0.0033	0.17	5
Benzo(k)fluoranthene	SOM02.4	207-08-9	mg/kg	c	1.6	29	148	1.1	HMW-PAH based on mammalian receptors (18 for soil invertebrates)	1.1	0.0033	0.17	5
Chrysene	SOM02.4	218-01-9	mg/kg	c	16	290	4.73	1.1	HMW-PAH based on mammalian receptors (18 for soil invertebrates)	1.1	0.0033	0.17	5
Dibenz(a,h)anthracene	SOM02.4	53-70-3	mg/kg	c	0.016	0.29	18.4	1.1	HMW-PAH based on mammalian receptors (18 for soil invertebrates)	0.016	0.0033	0.17	5
Fluoranthene	SOM02.4	206-44-0	mg/kg	n	2,400	30,000	0.1	1.1	HMW-PAH based on mammalian receptors (18 for soil invertebrates)	0.1	0.0033	0.33	10
Fluorene	SOM02.4	86-73-7	mg/kg	n	2,400	30,000	30	29	LMW-PAH based on soil invertebrates (100 for mammalian)	29	0.0033	0.17	5
Indeno(1,2,3-cd)pyrene	SOM02.4	193-39-5	mg/kg	c	0.16	2.9	109	1.1	HMW-PAH based on mammalian receptors (18 for soil invertebrates)	0.16	0.0033	0.17	5
Naphthalene	SOM02.4	91-20-3	mg/kg	c*	3.8	17	0.099	29	LMW-PAH based on soil invertebrates (100 for mammalian)	0.099	0.0033	0.17	5
Phenanthrene	SOM02.4	85-01-8	mg/kg	n	1,800	23,000	0.1	29	LMW-PAH based on soil invertebrates (100 for mammalian)	0.1	0.0033	0.17	5
Pyrene	SOM02.4	129-00-0	mg/kg	n	1,800	23,000	0.1	1.1	HMW-PAH based on mammalian receptors (18 for soil invertebrates)	0.1	0.0033	0.17	5
2-Methylnaphthalene	SOM02.4	91-57-6	mg/kg	n	240	3,000	3.24	29	LMW-PAH based on soil invertebrates (100 for mammalian)	3.24	0.0033	0.17	5
Polychlorinated Biphenyls (PCBs)													
Aroclor-1016	SOM02.4	12674-11-2	mg/kg	n	4.1	27	NS	NS	NS	4.1	--	0.033	--
Aroclor-1221	SOM02.4	11104-28-2	mg/kg	c	0.2	0.83	NS	NS	NS	0.2	--	0.033	--
Aroclor-1232	SOM02.4	11141-16-5	mg/kg	c	0.17	0.72	NS	NS	NS	0.17	--	0.033	--
Aroclor-1242	SOM02.4	53469-21-9	mg/kg	c	0.23	0.95	NS	NS	NS	0.23	--	0.033	--
Aroclor-1248	SOM02.4	12672-29-6	mg/kg	c	0.23	0.95	NS	NS	NS	0.23	--	0.033	--
Aroclor-1254	SOM02.4	11097-69-1	mg/kg	n	0.24	0.97	40	NS	NS	0.24	--	0.033	--
Aroclor-1260	SOM02.4	11096-82-5	mg/kg	c	0.24	0.99	NS	NS	NS	0.24	--	0.033	--
Aroclor-1262	SOM02.4	37324-23-5	mg/kg	c	0.24	0.99	NS	NS	NS	0.24	--	0.033	--
Aroclor-1268	SOM02.4	11100-14-4	mg/kg	c	0.24	0.99	NS	NS	NS	0.24	--	0.033	--
TAL Metals ICP-MS													
Antimony	ISM02.4	7440-36-0	mg/kg	n	31	470	0.14	0.27	Based on mammalian (78 for soil invertebrates)	0.14	--	1	--
Arsenic	ISM02.4	7440-38-2	mg/kg	c*R	0.68	3	5.7	18	Based on terrestrial plants (43 for avian, 46 for mammalian)	0.68	--	0.5	--
Barium	ISM02.4	7440-39-3	mg/kg	n	15,000	220,000	1	330	Based on soil invertebrates (2,000 for mammalian)	1	--	5	--
Beryllium	ISM02.4	7440-41-7	mg/kg	n	160	2,300	1.1	21	Based on mammalian (40 for soil invertebrates)	1.1	--	0.5	--
Cadmium	ISM02.4	7440-43-9	mg/kg	n	71	980	0.0022	0.36	Based on mammalian (0.77 for avian receptors, 32 for plants, 140 for soil invertebrates)	0.0022	--	0.5	--
Chromium	ISM02.4	7440-47-3	mg/kg	nm	120,000	1,800,000	0.4	26	Chromium III based on avian (34 for mammalian)	0.4	--	1	--
Cobalt	ISM02.4	7440-48-4	mg/kg	n	23	350	0.14	13	Based on terrestrial plants (120 for avian and 230 for mammalian)	0.14	--	0.5	--
Copper	ISM02.4	7440-50-8	mg/kg	n	3,100	47,000	5.4	28	Based on avian receptors (49 for mammalian, 70 for plants, and 80 for soil invertebrates)	5.4	--	1	--

Table D-1A. Screening Criteria for Soil and CLP Reference Limits

Analyte	Analytical Method	CASRN	Units	Soil Screening Level						Project Screening Level[5]	CRQL[6]		
				EPA Regional Screening Level[1]			Ecological Screening Level[2]						
				c/nc	Residential	Industrial	Lowest RAIS Screening Value[3]	EPA Eco-SSL Lowest Value[4]	EPA Eco-SSL Additional Value[4]		Low Soil by SIM	Low Soil	Medium Soil
Lead	ISM02.4	7439-92-1	mg/kg	L	400	800	0.054	11	Based on avian receptors (56 for mammalian, 120 for plants, and 1,700 for soil invertebrates)	0.054	--	0.5	--
Manganese	ISM02.4	7439-96-5	mg/kg	n	1,800	26,000	100	220	Based on terrestrial plants (450 for soil invertebrates, 4,000 for mammalian, and 4,300 for avian)	100	--	0.5	--
Nickel	ISM02.4	7440-02-0	mg/kg	n	1,500	22,000	14	38	Based on terrestrial plants (130 for mammalian, 210 for avian, and 280 for soil invertebrates)	14	--	0.5	--
Selenium	ISM02.4	7782-49-2	mg/kg	n	390	5,800	0.028	0.52	Based on terrestrial plants (0.63 for mammalian, 1.2 for avian, and 4.1 for soil invertebrates)	0.028	--	2.5	--
Silver	ISM02.4	7440-22-4	mg/kg	n	390	5,800	2	4.2	Based on avian receptors (14 for mammalian and 560 for plants)	2	--	0.5	--
Thallium	ISM02.4	7440-28-0	mg/kg	n	0.78	12	0.057	NS	NS	0.057	--	0.5	--
Vanadium	ISM02.4	7440-62-2	mg/kg	n	390	5,800	1.6	7.8	Based on avian receptors (280 for mammalian)	1.6	--	2.5	--
Zinc	ISM02.4	7440-66-6	mg/kg	n	23,000	350,000	6.6	46	Based on avian receptors (79 for mammalian, 120 for soil invertebrates, and 160 for plants)	6.6	--	1	--
TAL Metals ICP-AES													
Aluminum	ISM02.4	7429-90-5	mg/kg	n	77,000	1,100,000	50	NS	Not enough information to provide an Eco-SSL, instead if pH<5.5 then aluminum may be of concern	50	--	20	--
Calcium	ISM02.4	7440-70-2	mg/kg	-	NS	NS	NS	NS	NS	NS	--	500	--
Iron	ISM02.4	7439-89-6	mg/kg	n	55,000	820,000	200	NS	A determination of the geochemical conditions (i.e., pH and Eh at a minimum) of the environmental setting, as well as the presence of iron floc and the toxic metals, is critical to the determination of the relative importance of iron at a site.	200	--	10	--
Magnesium	ISM02.4	7439-95-4	mg/kg	-	NS	NS	NS	NS	NS	NS	--	500	--
Potassium	ISM02.4	7440-09-7	mg/kg	nc	NS	NS	NS	NS	NS	NS	--	500	--
Sodium	ISM02.4	7440-23-5	mg/kg	-	NS	NS	NS	NS	NS	NS	--	500	--
Miscellaneous													
Mercury	ISM02.4	7439-97-6	mg/kg	ns	11	46	0.1	NS	NS	0.1	--	0.1	--

NOTES:

1. EPA Regional Screening Levels (RSLs) for residential and industrial use scenario for hazard index = 1.0 for non-carcinogens and a 10^{-6} cancer risk level for carcinogens (May 2018).
2. Ecological screening levels for soil are only applicable to surface or shallow subsurface soil.
3. The lowest ecological risk soil screening value from the Risk Assessment Information System (RAIS) database, found at https://rais.ornl.gov/tools/eco search.php.
4. EPA Ecological Soil Screening Levels (SSLs). http://www.epa.gov/ecotox/ecossl/
5. The project screening level was selected to satisfy the EPA requirements as the (1) the residential EPA RSL and (2) the lowest ecological risk soil screening value from the RAIS. For analytes with no SSL or RSL, the project screening level will be NS (not specified).
6. Contract-required Quantitation Limits (CRQL) for U.S. Environmental Protection Agency (EPA) Contract Laboratory Program (CLP)
7. The values for cis-1,3-dichloropropene and trans-1,3-dichloropropene for the EPA RSLs reflect the value reported for 1,3-dichloropropene from their respective sources.
8. The values of endosulfan I, endosulfan II, and endosulfan sulfate for the EPA RSLs reflect the value reported for Endosulfan from their respective sources.

Project screening levels are either below the CRQL or not a reported analyte for the prescribed analytical method.

mg/kg = Milligram(s) per kilogram
c = Carcinogenic; nc = Non-carcinogenic
CASRN = Chemical Abstracts Service Registry Number
DL = Detection limit
Eco-SSL = Ecological Screening Level
LOD = Limit of detection.
LOQ = Limit of quantitation.

-- = Not provided
NS = Not specified
SIM = Selective ion monitoring
SW = EPA SW-846 Test Methods for Evaluating Solid Waste, Third Edition

Table D-1B. Screening Criteria for Soil and Private Laboratory Reference Limits

Analyte	Analytical Method	CASRN	Units	Soil Screening Levels: EPA Regional Screening Levels[1]: c/nc	Residential	Industrial	Ecological Screening Levels[2]: Lowest RAIS Screening Value[3]	EPA Eco-SSL Lowest Value[4]	EPA Eco-SSL Additional Values[4]	TCEQ TRRP Tier 1 Residential PCL[5]	Project Screening Level[6]	Achievable Laboratory Limits[7]: RL	DL
Total Petroleum Hydrocarbons													
TPH as Gasoline Range Organics (C_6 to C12)	TX1005	NS	mg/kg	-	NS	NS	NS	NS	NS	1,600	1600	20	10
TPH as Diesel Range Organics (C12 to C_{28})	TX1005	NS	mg/kg	-	NS	NS	NS	NS	NS	2,300	2300	20	10
TPH as Oil Range Organics (C_{28} to C_{35})	TX1005	NS	mg/kg	-	NS	NS	NS	NS	NS	2,300	2300	20	10
Miscellaneous													
Hexavalent chromium	SW3060/7199A	18540-29-9	mg/kg	c	0.3	6.3	0.4	130	Based on mammalian (no other values)	120	0.3	0.4	0.14
Cyanide	SW9012B	57-12-5	mg/kg	n	2.7	12	0.4	NS	NS	45	0.4	0.5	0.18
ORP	ASTM D1498	NS	mV	-	NS	NS	NS	NS	NS	NS	NS	10	10
pH	SW9045D	NS	S.U.	-	NS	NS	NS	NS	NS	NS	NS	0.01	0.01
Perfluorohexanoic acid (Hexanoic acid, undecafluoro-)	EPA Method 537 Modified	307-24-4	mg/kg	-	NS	NS	NS	NS	NS	0.25	0.25	0.0006	0.0002
Perfluorododecanoic acid (Dodecanoic acid, tricosafluoro-)	EPA Method 537 Modified	307-55-1	mg/kg	-	NS	NS	NS	NS	NS	0.79	0.79	0.0006	0.0002
Perfluorooctanoic acid (Octanoic acid, pentadecafluoro-)	EPA Method 537 Modified	335-67-1	mg/kg	-	NS	NS	NS	NS	NS	0.6	0.6	0.0006	0.0002
Perfluorodecanoic acid (Decanoic acid, nonadecafluoro-)	EPA Method 537 Modified	335-76-2	mg/kg	-	NS	NS	NS	NS	NS	0.99	0.99	0.0006	0.0002
Perfluorodecane sulfonic acid (1-Decanesulfonic acid, heneicosafluoro-)	EPA Method 537 Modified	335-77-3	mg/kg	-	NS	NS	NS	NS	NS	0.8	0.8	0.0006	0.0002
Perfluorohexane sulfonic acid (1-Hexanesulfonic acid, triddecafluoro-)	EPA Method 537 Modified	355-46-4	mg/kg	-	NS	NS	NS	NS	NS	0.25	0.25	0.0006	0.0002
Perfluorobutyric acid (Butanoic acid, heptafluoro-)	EPA Method 537 Modified	375-22-4	mg/kg	-	NS	NS	NS	NS	NS	180	180	0.0006	0.0002
Perfluorobutane sulfonic acid (1-Butanesulfonic acid, nonafluoro-)	EPA Method 537 Modified	375-73-5	mg/kg	n	1300	16000	NS	NS	NS	86	86	0.0006	0.0002
Perfluoroheptanoic acid (Heptanoic acid, tridecafluoro-)	EPA Method 537 Modified	375-85-9	mg/kg	-	NS	NS	NS	NS	NS	1.5	1.5	0.0006	0.0002
Perfluorononanoic acid (Nonanoic acid, heptadecafluoro-)	EPA Method 537 Modified	375-95-1	mg/kg	-	NS	NS	NS	NS	NS	0.76	0.76	0.0006	0.0002
Perfluorotetradecanoic acid (Tetradecanoic acid, heptacosafluoro-)	EPA Method 537 Modified	376-06-7	mg/kg	-	NS	NS	NS	NS	NS	0.51	0.51	0.0006	0.0002
Perfluorotridecanoic acid (Tridecanoic acid, pentacosafluoro-)	EPA Method 537 Modified	72629-94-8	mg/kg	-	NS	NS	NS	NS	NS	0.61	0.61	0.0006	0.0002
Perfluorooctane sulfonamide (1-Octanesulfonamide, hetpadecafluoro-)	EPA Method 537 Modified	754-91-6	mg/kg	-	NS	NS	NS	NS	NS	0.058	0.058	0.0006	0.0002

NOTES:
1. U.S. Environmental Protection Agency (EPA) Regional Screening Levels (RSLs) for residential and industrial use scenario for hazard index = 1.0 for non-carcinogens and a 10-6 cancer risk level for carcinogens (May 2018).
2. Ecological screening levels for soil are only applicable to surface or shallow subsurface soi
3. The lowest ecological risk soil screening value from the Risk Assessment Information System (RAIS) database, found at http://rais.ornl.gov/tools/eco_search.phj
4. EPA Ecological Soil Screening Levels. http://www.epa.gov/ecotox/ecossl/.
5. Texas Commission on Environmental Quality (TCEQ) Texas Risk Reduction Program (TRRP). 2012. *Risk-Based Levels for Total Petroleum Hydrocarbons (TPH)* . Land Protection Division. October. https://www.deq.state.ok.us/lpdnew/VCPIndex.htm
6. The project screening level was selected to satisfy the requirements of the EPA as the (1) the residential EPA RSL and (2) the lowest ecological risk soil screening value from the RAIS. For analytes with no SSL or RSL, the project screening level will be NS (not specified)
7. Achievable laboratory limits are for Eurofins Lancaster Laboratories Environmental, LLC., Lancaster, Pennsylvania

Project screening levels are below the RL but above the DL

mg/kg = Milligram(s) per kilogram
c = Carcinogenic
CASRN = Chemical Abstracts Service Registry Number
DL = Detection limit
Eco-SSL = Ecological Screening Level
LOQ = Level of Quantitation
NS = Not specified
PCL = Protective Concentration Level
RL = Reporting Limit
SW = EPA SW-846 Test Methods for Evaluating Solid Waste, Third Edition

Table D-2A. Screening Criteria for Ground Water and CLP Reference Limits

Analyte	Analytical Method	CASRN	Units	c/nc	EPA MCL[1]	EPA Tapwater RSL [2]	TCEQ Tier 1 PCL [3] $^{GW}GW_{Ing}$	Project Screening Level[4]	CRQLs[5] Low Water by SIM	CRQLs[5] Trace Water	CRQLs[5] Low Water
Volatile Organic Compounds											
1,1,1-Trichloroethane	SOM02.4	71-55-6	µg/L	nc	200	8,000	200	200	--	0.50	5
1,1,2-Trichloro-1,2,2-trifluoroethane	SOM02.4	76-13-1	µg/L	-	NS	**10,000**	730,000	10,000	--	0.50	5
1,1,2,2-Tetrachloroethane	SOM02.4	79-34-5	µg/L	c	NS	0.076	4.6	0.076	--	0.50	5
1,1,2-Trichloroethane	SOM02.4	79-00-5	µg/L	c	5	0.28	NS	5	--	0.50	5
1,1-Dichloroethane	SOM02.4	75-34-3	µg/L	c	NS	2.8	4,900	2.8	--	0.50	5
1,1-Dichloroethene	SOM02.4	75-35-4	µg/L	nc	7	280	7	7	--	0.50	5
1,2,3-Trichlorobenzene	SOM02.4	87-61-6	µg/L	nc	NS	7	73	7	--	0.50	5
1,2,4-Trichlorobenzene	SOM02.4	120-82-1	µg/L	c	70	1.2	70	70	--	0.50	5
1,2-Dibromo-3-chloropropane	SOM02.4	96-12-8	µg/L	c	0.2	0.00033	0.2	0.2	--	0.50	5
1,2-Dibromoethane (EDB)	SOM02.4	106-93-4	µg/L	c	0.05	0.0075	0.05	0.05	--	0.50	5
1,2-Dichlorobenzene	SOM02.4	95-50-1	µg/L	nc	600	300	600	600	--	0.50	5
1,2-Dichloroethane	SOM02.4	107-06-2	µg/L	c	5	0.17	5	5	--	0.50	5
1,2-Dichloropropane	SOM02.4	78-87-5	µg/L	c	5	**0.85**	5	5	--	0.50	5
1,3-Dichlorobenzene	SOM02.4	541-73-1	µg/L	-	600	300	730	600	--	0.50	5
1,4-Dichlorobenzene	SOM02.4	106-46-7	µg/L	c	75	0.48	75	75	--	0.50	5
2-Butanone (Methyl Ethyl Ketone)	SOM02.4	78-93-3	µg/L	nc	NS	5,600	15,000	5,600	--	5	10
2-Hexanone	SOM02.4	591-78-6	µg/L	nc	NS	38	120	38	--	5	10
4-Methyl-2-pentanone (Methyl isobutyl ketone)	SOM02.4	108-10-1	µg/L	nc	NS	6,300	2,000	2,000	--	5	10
Acetone	SOM02.4	67-64-1	µg/L	nc	NS	14,000	22,000	14,000	--	5	10
Benzene	SOM02.4	71-43-2	µg/L	c	5	0.46	5	5	--	0.50	5
Bromochloromethane	SOM02.4	74-97-5	µg/L	nc	NS	83	980	83	--	0.50	5
Bromodichloromethane[6]	SOM02.4	75-27-4	µg/L	c	80	0.13	15	80	--	0.50	5
Bromoform[6]	SOM02.4	75-25-2	µg/L	c	80	3.3	120	80	--	0.50	5
Bromomethane	SOM02.4	74-83-9	µg/L	nc	NS	7.5	34	7.5	--	0.50	5
Carbon Disulfide	SOM02.4	75-15-0	µg/L	nc	NS	810	2,400	810	--	0.50	5
Carbon Tetrachloride	SOM02.4	56-23-5	µg/L	c	5	0.46	5	5	--	0.50	5
Chlorobenzene	SOM02.4	108-90-7	µg/L	nc	100	78	100	100	--	0.50	5
Chloroethane	SOM02.4	75-00-3	µg/L	nc	NS	21,000	9,800	9,800	--	0.50	5
Chloroform[6]	SOM02.4	67-66-3	µg/L	c	80	0.22	240	80	--	0.50	5
Chloromethane	SOM02.4	74-87-3	µg/L	nc	NS	190	70	70	--	0.50	5
cis-1,2-Dichloroethene	SOM02.4	156-59-2	µg/L	nc	70	36	70	70	--	0.50	5
cis-1,3-Dichloropropene	SOM02.4	10061-01-5	µg/L	c	NS	0.47	1.7	0.47	--	0.50	5
Cyclohexane	SOM02.4	110-82-7	µg/L	-	NS	13,000	120,000	13,000	--	0.50	5
Dibromochloromethane	SOM02.4	124-48-1	µg/L	c	80	0.87	11	80	--	0.50	5
Dichlorodifluoromethane	SOM02.4	75-71-8	µg/L	nc	NS	200	4,900	200	--	0.50	5
Ethylbenzene	SOM02.4	100-41-4	µg/L	c	700	1.5	700	700	--	0.50	5
Isopropylbenzene (Cumene)	SOM02.4	98-82-8	µg/L	-	NS	450	2,400	450	--	0.50	5
Methyl Acetate	SOM02.4	79-20-9	µg/L	-	NS	20,000	24,000	20,000	--	0.50	5

Table D-2A. Screening Criteria for Ground Water and CLP Reference Limits

Analyte	Analytical Method	CASRN	Units	c/nc	EPA MCL[1]	EPA Tapwater RSL [2]	TCEQ Tier 1 PCL [3] $^{GW}GW_{Ing}$	Project Screening Level[4]	CRQLs[5] Low Water by SIM	CRQLs[5] Trace Water	CRQLs[5] Low Water
Methylcyclohexane	SOM02.4	108-87-2	µg/L	-	NS	13,000	120,000	13000	--	0.50	5
Methyl tert-Butyl Ether	SOM02.4	1634-04-4	µg/L	c	NS	14	240	14	--	0.50	5
Methylene Chloride	SOM02.4	75-09-2	µg/L	c	5	11	5	5	--	0.50	5
Styrene	SOM02.4	100-42-5	µg/L	nc	100	1,200	100	100	--	0.50	5
Tetrachloroethene	SOM02.4	127-18-4	µg/L	c	5	11	5	5	--	0.50	5
Toluene	SOM02.4	108-88-3	µg/L	nc	1,000	1,100	1,000	1,000	--	0.50	5
trans-1,2-Dichloroethene	SOM02.4	156-60-5	µg/L	nc	100	360	100	100	--	0.50	5
trans-1,3-Dichloropropene	SOM02.4	10061-02-6	µg/L	c	NS	0.47	9.1	0.47	--	0.50	5
Trichloroethene	SOM02.4	79-01-6	µg/L	c	5	0.49	5	5	--	0.50	5
Trichlorofluoromethane	SOM02.4	75-69-4	µg/L	nc	NS	5,200	7,300	5,200	--	0.50	5
Vinyl Chloride	SOM02.4	75-01-4	µg/L	c	2	0.019	2	2	--	0.50	5
m,p-Xylene	SOM02.4	179601-23-1	µg/L	nc	10,000	190	10,000	10,000	--	0.50	5
o-Xylene	SOM02.4	95-47-6	µg/L	nc	NS	190	10,000	190	--	0.50	5
Semivolatile Organic Compounds											
1,1'-Biphenyl	SOM02.4	92-52-4	µg/L	nc	NS	0.83	12,000	0.83	--	--	5
1,2,4,5-Tetrachlorobenzene	SOM02.4	95-94-3	µg/L	nc	NS	1.7	7.3	1.7	--	--	5
1,4-Dioxane	SOM02.4	123-91-1	µg/L	c	NS	0.46	9.1	0.46	--	--	2
2,2'-Oxybis (1-chloropropane)	SOM02.4	108-60-1	µg/L	nc	NS	710	13	13	--	--	10
2,3,4,6-Tetrachlorophenol	SOM02.4	58-90-2	µg/L	nc	NS	240	730	240	--	--	5
2,4,5-Trichlorophenol	SOM02.4	95-95-4	µg/L	nc	NS	1,200	2,400	1,200	--	--	5
2,4,6-Trichlorophenol	SOM02.4	88-06-2	µg/L	c	NS	4.1	24	4.1	--	--	5
2,4-Dichlorophenol	SOM02.4	120-83-2	µg/L	nc	NS	46	73	46	--	--	5
2,4-Dimethylphenol	SOM02.4	105-67-9	µg/L	nc	NS	360	490	360	--	--	5
2,4-Dinitrophenol	SOM02.4	51-28-5	µg/L	nc	NS	39	49	39	--	--	10
2,4-Dinitrotoluene	SOM02.4	121-14-2	µg/L	c	NS	0.24	1.3	0.24	--	--	5
2,6-Dinitrotoluene	SOM02.4	606-20-2	µg/L	c	NS	0.049	1.3	0.049	--	--	5
2-Chloronaphthalene	SOM02.4	91-58-7	µg/L	nc	NS	750	2,000	750	--	--	5
2-Chlorophenol	SOM02.4	95-57-8	µg/L	nc	NS	91	120	91	--	--	5
2-Methylnaphthalene	SOM02.4	91-57-6	µg/L	nc	NS	36	98	36	0.1	--	5
2-Methylphenol	SOM02.4	95-48-7	µg/L	nc	NS	930	1,200	930	--	--	10
2-Nitroaniline	SOM02.4	88-74-4	µg/L	nc	NS	190	7.3	7.3	--	--	5
2-Nitrophenol	SOM02.4	88-75-5	µg/L	c	NS	NS	49	49	--	--	5
3,3'-Dichlorobenzidine	SOM02.4	91-94-1	µg/L	c	NS	0.13	2	0.13	--	--	5
3-Methylphenol	SOM02.4	108-39-4	µg/L	nc	NS	930	1,200	930	--	--	5
3-Nitroaniline	SOM02.4	99-09-2	µg/L	nc	NS	NS	7.3	7.3	--	--	10
4,6-Dinitro-2-methylphenol	SOM02.4	534-52-1	µg/L	nc	NS	1.5	2.4	1.5	--	--	10
4-Bromophenyl-phenylether	SOM02.4	101-55-3	µg/L	-	NS	NS	0.06	0.06	--	--	5
4-Chloro-3-methylphenol	SOM02.4	59-50-7	µg/L	nc	NS	1,400	120	120	--	--	5
4-Chloroaniline	SOM02.4	106-47-8	µg/L	c	NS	0.37	4.6	0.37	--	--	10
4-Chlorophenyl-phenylether	SOM02.4	7005-72-3	µg/L	-	NS	NS	0.06	0.06	0.1	--	5

Table D-2A. Screening Criteria for Ground Water and CLP Reference Limits

Analyte	Analytical Method	CASRN	Units	c/nc	EPA MCL[1]	EPA Tapwater RSL [2]	TCEQ Tier 1 PCL [3] $^{GW}GW_{Ing}$	Project Screening Level[4]	CRQLs[5]		
									Low Water by SIM	Trace Water	Low Water
4-Methylphenol	SOM02.4	106-44-5	µg/L	nc	NS	1,900	120	120	--	--	10
4-Nitroaniline	SOM02.4	100-01-6	µg/L	c	NS	3.8	46	3.8	--	--	10
4-Nitrophenol	SOM02.4	100-02-7	µg/L	c	NS	NS	49	49	--	--	10
Acenaphthene	SOM02.4	83-32-9	µg/L	nc	NS	530	1,500	530	0.1	--	5
Acetophenone	SOM02.4	98-86-2	µg/L	nc	NS	1,900	2,400	1,900	--	--	10
Acenaphthylene	SOM02.4	208-96-8	µg/L	-	NS	530	1,500	530	0.1	--	5
Anthracene	SOM02.4	120-12-7	µg/L	nc	NS	1,800	7,300	1,800	0.1	--	5
Atrazine	SOM02.4	1912-24-9	µg/L	c	3	0.3	3	3	--	--	10
Benzaldehyde	SOM02.4	100-52-7	µg/L	nc	NS	19.00	2,400	19	--	--	10
Benzo(a)anthracene	SOM02.4	56-55-3	µg/L	c	NS	0.030	9.1	0.03	0.1	--	5
Benzo(a)pyrene	SOM02.4	50-32-8	µg/L	c	0.2	0.0034	0.2	0.2	0.1	--	5
Benzo(b)fluoranthene	SOM02.4	205-99-2	µg/L	c	NS	0.25	9.1	0.25	0.1	--	5
Benzo(g,h,i)perylene	SOM02.4	191-24-2	µg/L	nc	NS	120	730	120	0.1	--	5
Benzo(k)fluoranthene	SOM02.4	207-08-9	µg/L	c	NS	2.50	91	2.5	0.1	--	5
bis(2-Chloroethoxy)methane	SOM02.4	111-91-1	µg/L	nc	NS	59	0.83	0.83	--	--	5
bis(2-Chloroethyl)ether	SOM02.4	111-44-4	µg/L	c	NS	0.014	0.83	0.014	--	--	10
bis(2-Ethylhexyl)phthalate	SOM02.4	117-81-7	µg/L	c	6	5.6	6	6	--	--	5
Butylbenzylphthalate	SOM02.4	85-68-7	µg/L	c	NS	16	150	16	--	--	5
Caprolactam	SOM02.4	105-60-2	µg/L	nc	NS	9,900	12,000	9,900	--	--	10
Carbazole	SOM02.4	86-74-8	µg/L	-	NS	NS	46	46	--	--	10
Chrysene	SOM02.4	218-01-9	µg/L	c	NS	25.00	910	25	0.1	--	5
Di-n-butylphthalate	SOM02.4	84-74-2	µg/L	nc	NS	900	2,400	900	--	--	5
Di-n-octylphthalate	SOM02.4	117-84-0	µg/L	nc	NS	200	240	200	--	--	10
Dibenz(a,h)anthracene	SOM02.4	53-70-3	µg/L	c	NS	0.0034	0.2	0.0034	0.1	--	5
Dibenzofuran	SOM02.4	132-64-9	µg/L	nc	NS	7.9	98	7.9	--	--	5
Diethylphthalate	SOM02.4	84-66-2	µg/L	nc	NS	15,000	20,000	15,000	--	--	5
Dimethylphthalate	SOM02.4	131-11-3	µg/L	-	NS	NS	20,000	20000	--	--	5
Fluoranthene	SOM02.4	206-44-0	µg/L	nc	NS	800	980	800	0.1	--	10
Fluorene	SOM02.4	86-73-7	µg/L	nc	NS	290	980	290	0.1	--	5
Hexachlorobenzene	SOM02.4	118-74-1	µg/L	c	1	0.0098	1	1	--	--	5
Hexachlorobutadiene	SOM02.4	87-68-3	µg/L	c	NS	0.14	12	0.14	--	--	5
Hexachlorocyclopentadiene	SOM02.4	77-47-4	µg/L	nc	50	0.41	50	50	--	--	10
Hexachloroethane	SOM02.4	67-72-1	µg/L	c	NS	0.33	17	0.33	--	--	5
Indeno(1,2,3-cd)pyrene	SOM02.4	193-39-5	µg/L	c	NS	0.25	9.1	0.25	0.1	--	5
Isophorone	SOM02.4	78-59-1	µg/L	c	NS	78	960	78	--	--	5
N-Nitrosodimethylamine	SOM02.4	62-75-9	µg/L	c	NS	0.00011	0.02	0.00011	--	--	5
N-Nitroso-di-n-propylamine	--	621-64-7	µg/L	c	NS	0.011	0.13	0.011	--	--	--
Naphthalene	SOM02.4	91-20-3	µg/L	c	NS	0.17	490	0.17	--	--	5
Nitrobenzene	SOM02.4	98-95-3	µg/L	c	NS	0.14	49	0.14	0.1	--	5
Pentachlorophenol	SOM02.4	87-86-5	µg/L	c	1	0.041	1	1	0.2	--	10

Table D-2A. Screening Criteria for Ground Water and CLP Reference Limits

Analyte	Analytical Method	CASRN	Units	c/nc	EPA MCL[1]	EPA Tapwater RSL[2]	TCEQ Tier 1 PCL[3] $^{GW}GW_{Ing}$	Project Screening Level[4]	CRQLs[5] Low Water by SIM	CRQLs[5] Trace Water	CRQLs[5] Low Water
Phenanthrene	SOM02.4	85-01-8	µg/L	nc	NS	120	730	120	0.1	--	5
Phenol	SOM02.4	108-95-2	µg/L	nc	NS	5,800	7,300	5,800	NS	--	10
Pyrene	SOM02.4	129-00-0	µg/L	nc	NS	120	730	120	0.1	--	5
Polycyclic Aromatic Hydrocarbons											
Acenaphthene	SOM02.4	83-32-9	µg/L	nc	NS	530	1,500	530	0.1	--	5
Acenaphthylene	SOM02.4	208-96-8	µg/L	-	NS	530	1,500	530.00	0.1	--	5
Anthracene	SOM02.4	120-12-7	µg/L	nc	NS	1,800	7,300	1,800	0.1	--	5
Benzo(a)anthracene	SOM02.4	56-55-3	µg/L	c	NS	0.013	9.1	0.013	0.1	--	5
Benzo(a)pyrene	SOM02.4	50-32-8	µg/L	c	0.2	0.025	0.2	0.2	0.1	--	5
Benzo(b)fluoranthene	SOM02.4	205-99-2	µg/L	c	NS	0.25	9.1	0.25	0.1	--	5
Benzo(g,h,i)perylene	SOM02.4	191-24-2	µg/L	nc	NS	120	730.00	120.00	0.1	--	5
Benzo(k)fluoranthene	SOM02.4	207-08-9	µg/L	c	NS	2.5	91	2.5	0.1	--	5
Chrysene	SOM02.4	218-01-9	µg/L	c	NS	25	910	25	0.1	--	5
Dibenz(a,h)anthracene	SOM02.4	53-70-3	µg/L	c	NS	0.025	0.2	0.025	0.1	--	5
Fluoranthene	SOM02.4	206-44-0	µg/L	nc	NS	800	980	800	0.1	--	10
Fluorene	SOM02.4	86-73-7	µg/L	nc	NS	290	980	290	0.1	--	5
Indeno(1,2,3-cd)pyrene	SOM02.4	193-39-5	µg/L	c	NS	0.25	9.1	0.25	0.1	--	5
Naphthalene	SOM02.4	91-20-3	µg/L	c	NS	0.17	490	0.17	0.1	--	5
Phenanthrene	SOM02.4	85-01-8	µg/L	nc	NS	120	730	120.00	0.1	--	5
Pyrene	SOM02.4	129-00-0	µg/L	nc	NS	120	730	120	0.1	--	5
2-Methylnaphthalene	SOM02.4	91-57-6	µg/L	nc	NS	36	98	36	0.1	--	5
Polychlorinated Biphenyls											
Aroclor-1016	SOM02.4	12674-11-2	µg/L	c	NS	0.22	NS	0.22	--	--	1
Aroclor-1221	SOM02.4	11104-28-2	µg/L	c	NS	0.0047	NS	0.0047	--	--	1
Aroclor-1232	SOM02.4	11141-16-5	µg/L	c	NS	0.0047	NS	0.0047	--	--	1
Aroclor-1242	SOM02.4	53469-21-9	µg/L	c	NS	0.0078	NS	0.0078	--	--	1
Aroclor-1248	SOM02.4	12672-29-6	µg/L	c	NS	0.0078	NS	0.0078	--	--	1
Aroclor-1254	SOM02.4	11097-69-1	µg/L	c	NS	0.0078	NS	0.0078	--	--	1
Aroclor-1260	SOM02.4	11096-82-5	µg/L	c	NS	0.0078	NS	0.0078	--	--	1
Aroclor-1262	SOM02.4	37324-23-5	µg/L	-	NS	0.0078	NS	0.0078	--	--	1
Aroclor-1268	SOM02.4	11100-14-4	µg/L	-	NS	0.0078	NS	0.0078	--	--	1
Total PCBs	--	1336-36-3	µg/L	c	NS	NS	NS	NS	--	--	--

Table D-2A. Screening Criteria for Ground Water and CLP Reference Limits

Analyte	Analytical Method	CASRN	Units	c/nc	EPA MCL[1]	EPA Tapwater RSL [2]	TCEQ Tier 1 PCL [3] $^{GW}GW_{Ing}$	Project Screening Level[4]	CRQLs[5] Low Water by SIM	CRQLs[5] Trace Water	CRQLs[5] Low Water
ICP-MS Metals[7]											
Aluminum	ISM02.4	7429-90-5	µg/L	nc	NS	20,000	24,000	20,000	--	--	20
Antimony	ISM02.4	7440-36-0	µg/L	nc	6	7.8	6	6	--	--	2
Arsenic	ISM02.4	7440-38-2	µg/L	c	10	0.052	10	10	--	--	1
Barium	ISM02.4	7440-39-3	µg/L	nc	2,000	3,800	2,000	2,000	--	--	10
Beryllium	ISM02.4	7440-41-7	µg/L	nc	4	25	4	4	--	--	1
Cadmium	ISM02.4	7440-43-9	µg/L	nc	NS	9.2	5	5	--	--	1
Calcium	ISM02.4	7440-70-2	µg/L	-	NS	NS	NS	NS	--	--	500
Chromium[8]	ISM02.4	7440-47-3	µg/L	nc	100	22,000	100	100	--	--	2
Cobalt	ISM02.4	7440-48-4	µg/L	nc	NS	6	240	6	--	--	1
Copper	ISM02.4	7440-50-8	µg/L	nc	1,300	800	1,300	1,300	--	--	2
Iron	ISM02.4	7439-89-6	µg/L	nc	NS	14,000	NS	14,000	--	--	200
Lead	ISM02.4	7439-92-1	µg/L	-	15	15	15	15	--	--	1
Magnesium	ISM02.4	7439-95-4	µg/L	-	NS	NS	NS	NS	--	--	500
Manganese	ISM02.4	7439-96-5	µg/L	nc	NS	NS	1,100	1100	--	--	1
Nickel	ISM02.4	7440-02-0	µg/L	nc	NS	390	490	390	--	--	1
Potassium	ISM02.4	7440-09-7	µg/L	-	NS	NS	NS	NS	--	--	500
Selenium	ISM02.4	7782-49-2	µg/L	nc	50	100	50	50	--	--	5
Silver	ISM02.4	7440-22-4	µg/L	nc	NS	94	120	94	--	--	1
Sodium	ISM02.4	7440-23-5	µg/L	-	NS	NS	NS	NS	--	--	500
Thallium	ISM02.4	7440-28-0	µg/L	nc	2	0.2	2	2	--	--	1
Vanadium	ISM02.4	7440-62-2	µg/L	nc	NS	86	44	44	--	--	5
Zinc	ISM02.4	7440-66-6	µg/L	nc	NS	6,000	7,300	6,000	--	--	2
ICP-AES Metals[7]											
Aluminum	ISM02.4	7429-90-5	µg/L	nc	NS	20,000	24,000	20,000	--	--	200
Antimony	ISM02.4	7440-36-0	µg/L	nc	6	7.8	6	6	--	--	60
Arsenic	ISM02.4	7440-38-2	µg/L	c	10	0.052	10	10	--	--	10
Barium	ISM02.4	7440-39-3	µg/L	nc	2,000	3,800	2,000	2,000	--	--	200
Beryllium	ISM02.4	7440-41-7	µg/L	nc	4	25	4	4	--	--	5
Boron	--	7440-42-8	µg/L	nc	NS	4,000	4,900	4,000	--	--	--
Cadmium	ISM02.4	7440-43-9	µg/L	nc	NS	9.2	5	5	--	--	5
Calcium	ISM02.4	7440-70-2	µg/L	-	NS	NS	NS	NS	--	--	5,000
Chromium[8]	ISM02.4	7440-47-3	µg/L	nc	100	NS	100	100	--	--	10
Cobalt	ISM02.4	7440-48-4	µg/L	nc	NS	6	240	6	--	--	50
Copper	ISM02.4	7440-50-8	µg/L	nc	1,300	800	1,300	1300	--	--	25
Iron	ISM02.4	7439-89-6	µg/L	nc	NS	14,000	NS	14,000	--	--	100
Lead	ISM02.4	7439-92-1	µg/L	-	15	15	15	15	--	--	10
Magnesium	ISM02.4	7439-95-4	µg/L	-	NS	NS	NS	NS	--	--	5,000
Manganese	ISM02.4	7439-96-5	µg/L	nc	NS	NS	1,100	1100	--	--	15

Table D-2A. Screening Criteria for Ground Water and CLP Reference Limits

Analyte	Analytical Method	CASRN	Units	c/nc	EPA MCL[1]	EPA Tapwater RSL[2]	TCEQ Tier 1 PCL[3] $^{GW}GW_{Ing}$	Project Screening Level[4]	CRQLs[5] Low Water by SIM	CRQLs[5] Trace Water	CRQLs[5] Low Water
Nickel	ISM02.4	7440-02-0	µg/L	nc	NS	390	490	390	--	--	40
Potassium	ISM02.4	7440-09-7	µg/L	-	NS	NS	NS	NS	--	--	5,000
Selenium	ISM02.4	7782-49-2	µg/L	nc	50	100	50	50	--	--	35
Silicon	ISM02.4	7440-21-3	µg/L	-	NS	NS	NS	NS	--	--	NS
Silver	ISM02.4	7440-22-4	µg/L	nc	NS	94	120	94	--	--	10
Sodium	ISM02.4	7440-23-5	µg/L	-	NS	NS	NS	NS	--	--	5,000
Thallium	ISM02.4	7440-28-0	µg/L	nc	2	0.2	2	2	--	--	25
Vanadium	ISM02.4	7440-62-2	µg/L	nc	NS	86	44	44	--	--	50
Zinc	ISM02.4	7440-66-6	µg/L	nc	NS	6,000	7,300	6,000	--	--	60
Miscellaneous											
Mercury	ISM02.4	7439-97-6	µg/L	nc	2	0.63	2	2	--	--	0.2

NOTES:

1. U.S. Environmental Protection Agency (EPA) National Primary Drinking Water Regulations, Maximum Contaminant Levels (MCLs), May 2009.
2. EPA Region 6 Regional Screening Levels (RSLs) for Tapwater (May 2018) for hazard index = 1.0 for non-carcinogens and a 10-6 cancer risk level for carcinogens.
3. Texas Commission on Environmental Quality Risk Reduction Program (TRRP) PCLs, Revised April 27, 2018 (WQSs) (https://www.tceq.texas.gov/remediation/trrp/trrppcls.html)
4. The project screening level was selected to satisfy EPA requirements. The EPA MCL will be used; if no EPA MCL standard exists for an analyte, then the project screening level is the lower of the EPA Tapwater RSL or TCEQ TRRP PCL, if achievable.
5. Contract-required Quantitation Limits (CRQLs) for EPA Contract Laboratory Program (CLP)
6. EPA RSL for tapwater is for total trihalomethanes.
7. EPA MCL and tapwater RSL apply to total metals.

Project screening levels are either below the CRQL or not a reported analyte for the prescribed analytical method.

µg/L = Microgram(s) per liter
mg/L = Milligram(s) per liter
-- = Not provided
c = Carcinogenic; nc = Non-carcinogenic
CASRN = Chemical Abstracts Service Registry Number
DL = Detection limit
ICP-AES = Inductively-coupled plasma and atomic emission spectroscopy
ICPMS = Inductively-coupled plasma and mass spectrometry
NS = Not specified
PCB = Polychlorinated biphenyl
SIM = Selective ion monitoring
S.U. = Standard Unit
TPH = Total petroleum hydrocarbon

Table D-2B. Screening Criteria for Ground Water and Private Laboratory Reference Limits

Analyte	Analytical Method	CASRN	Units	c/nc	EPA MCL (1)	EPA Tapwater RSL (2)	TCEQ Tier 1 PCL (3) $^{(3)}GW_{ing}$	Project Screening Level (4)	Achievable Laboratory Limits (5)	
									RL	DL
Total Petroleum Hydrocarbons										
TPH as Gasoline Range Organics (C_6 to C_{12})	TX1005	NS	mg/L	-	NS	NS	0.98	0.98	2.00	0.580
TPH as Diesel Range Organics (C_{12} to C_{28})	TX1005	NS	mg/L	-	NS	NS	0.98	0.98	2.00	0.680
TPH as Oil Range Organics (C_{28} to C_{35})	TX1005	NS	mg/L	-	NS	NS	0.98	0.98	2.00	0.680
Miscellaneous										
Hexavalent Chromium	EPA218.6	18540-29-9	mg/L	c	NS	0.000035	0.0001	0.000035	0.001	0.00015
Cyanide	SW9012B	57-12-5	mg/L	nc	0.2	0.0015	0.2	0.2	0.01	0.005
Total Dissolved Solids	SM2540C	NS	mg/L	--	NS	NS	NS	NS	60.0	20.0
Perfluorooctanoic sulfonic acid (1-Octanesulfonic acid, heptadecafluoro-1-)	EPA Method 537 Modified	1763-23-1	µg/L	--	NS	NS	0.56	0.560	0.002	0.0004
Perfluoroundecanoic acid (Undecanoic acid, uncosafluoro-)	EPA Method 537 Modified	2058-94-8	µg/L	--	NS	NS	0.29	0.290	0.002	0.0004
Perfluoropentanoic acid (Pentanoic acid, nonafluoro-)	EPA Method 537 Modified	2706-90-3	µg/L	--	NS	NS	0.093	0.093	0.006	0.002
Perfluorohexanoic acid (Hexanoic acid, undecafluoro-)	EPA Method 537 Modified	307-24-4	µg/L	--	NS	NS	0.093	0.093	0.002	0.0004
Perfluorododecanoic acid (Dodecanoic acid, tricosafluoro-)	EPA Method 537 Modified	307-55-1	µg/L	--	NS	NS	0.29	0.290	0.001	0.0003
Perfluorooctanoic acid (Octanoic acid, pentadecafluoro-)	EPA Method 537 Modified	335-67-1	µg/L	--	NS	NS	0.29	0.290	0.001	0.0003
Perfluorodecanoic acid (Decanoic acid, nonadecafluoro-)	EPA Method 537 Modified	335-76-2	µg/L	--	NS	NS	0.37	0.370	0.002	0.001
Perfluorodecane sulfonic acid (1-Decanesulfonic acid, heneicosafluoro-)	EPA Method 537 Modified	335-77-3	µg/L	--	NS	NS	0.29	0.290	---	---
Perfluorohexane sulfonic acid (1-Hexanesulfonic acid, triddecafluoro-)	EPA Method 537 Modified	355-46-4	µg/L	--	NS	NS	0.093	0.093	0.002	0.0004
Perfluorobutyric acid (Butanoic acid, heptafluoro-)	EPA Method 537 Modified	375-22-4	µg/L	--	NS	NS	71.0	71.0	0.006	0.002
Perfluorobutane sulfonic acid (1-Butanesulfonic acid, nonafluoro-)	EPA Method 537 Modified	375-73-5	µg/L	nc	NS	400	34.0	34.0	0.001	0.0003
Perfluoroheptanoic acid (Heptanoic acid, tridecafluoro-)	EPA Method 537 Modified	375-85-9	µg/L	--	NS	NS	0.56	0.560	0.001	0.0003
Perfluorononanoic acid (Nonanoic acid, heptadecafluoro-)	EPA Method 537 Modified	375-95-1	µg/L	--	NS	NS	0.29	0.290	0.002	0.0004
Perfluorotetradecanoic acid (Tetradecanoic acid, heptacosafluoro-)	EPA Method 537 Modified	376-06-7	µg/L	--	NS	NS	0.29	0.290	0.001	0.0003
Perfluorotridecanoic acid (Tridecanoic acid, pentacosafluoro-)	EPA Method 537 Modified	72629-94-8	µg/L	--	NS	NS	0.29	0.290	0.001	0.0003
Perfluorooctane sulfonamide (1-Octanesulfonamide, hetpadecafluoro-)	EPA Method 537 Modified	754-91-6	µg/L	--	NS	NS	0.29	0.290	0.003	0.001

NOTES:

1. U.S. Environmental Protection Agency (EPA) National Primary Drinking Water Regulations, Maximum Contaminant Levels (MCLs), May 2009.
2. EPA Region 6 Regional Screening Levels (RSLs) for Tapwater (May 2018) for hazard index = 1.0 for non-carcinogens and a 10-6 cancer risk level for carcinogens.
3. Texas Commission on Environmental Quality Risk Reduction Program (TRRP) PCLs, Revised April 27, 2018 (WQSs) (https://www.tceq.texas.gov/remediation/trrp/trrppcls.html)
4. The project screening level was selected to satisfy the requirements of the EPA. The EPA MCL will be used; if no EPA MCL standard exists for any analyte, then the project screening level is lower of the EPA Tapwater RSL or TCEQ TRRP PCL, if achievable.
5. Achievable laboratory limits are for Eurofins Lancaster Laboratories Environmental, LLC., Lancaster, Pennsylvania.

Project screening levels are either below the RL and DL or not a reported analyte for the prescribed analytical method.

µg/L = Microgram(s) per liter
mg/L = Milligram(s) per liter
c = Carcinogenic; nc = Non-carcinogenic
CASRN = Chemical Abstracts Service Registry Number
DL = Detection Limit
ICP-AES = Inductively-coupled plasma and atomic emission spectroscopy
ICP-MS = Inductively-coupled plasma and mass spectrometry
-- = Not provided
NS = Not specified
RL = Reporting limit
SIM = Selective ion monitoring
S.U. = Standard Unit

Table D-3A. Screening Criteria for Sediment and CLP Reference Limits

Analyte	Analytical Method	CASRN	Units	Sediment Screening Levels			Project Screening Level (4)	CRQLs (5)		
				TCEQ Ecological Screening Values (1)	Protection of Benthic Invertebrates Screening Level (2)	Human Health Sediment Bioaccumulation Screening Level (3)		Low Soil by SIM	Low Soil	Medium Soil
Volatile Organic Compounds										
1,1,1-Trichloroethane	SOM02.4	71-55-6	mg/kg	8.27	0.07	NS	0.07	--	0.005	0.25
1,1,2-Trichloro-1,2,2-trifluoroethane	SOM02.4	76-13-1	mg/kg	2.78	NS	NS	3	--	0.005	0.25
1,1,2,2-Tetrachloroethane	SOM02.4	79-34-5	mg/kg	0.63	NS	NS	0.63	--	0.005	0.25
1,1,2-Trichloroethane	SOM02.4	79-00-5	mg/kg	0.98	0.4	NS	0.4	--	0.005	0.25
1,1-Dichloroethane	SOM02.4	75-34-3	mg/kg	2.32	0.02	NS	0.02	--	0.005	0.25
1,1-Dichloroethene	SOM02.4	75-35-4	mg/kg	3.74	0.1	NS	0.1	--	0.005	0.25
1,2,3-Trichlorobenzene	SOM02.4	87-61-6	mg/kg	NS	0.011	NS	0.011	--	0.005	0.25
1,2,4-Trichlorobenzene	SOM02.4	120-82-1	mg/kg	0.88	0.011	NS	0.011	--	0.005	0.25
1,2-Dibromo-3-chloropropane	SOM02.4	96-12-8	mg/kg	NS	NS	NS	NS	--	0.005	0.25
1,2-Dibromoethane (EDB)	SOM02.4	106-93-4	mg/kg	NS	NS	NS	NS	--	0.005	0.25
1,2-Dibromoethane (EDB)	SW8011	106-93-4	mg/kg	NS	NS	NS	NS	--	--	--
1,2-Dichlorobenzene	SOM02.4	95-50-1	mg/kg	0.83	0.03	NS	0.03	--	0.005	0.25
1,2-Dichloroethane	SOM02.4	107-06-2	mg/kg	9.56	0.02	NS	0.02	--	0.005	0.25
1,2-Dichloropropane	SOM02.4	78-87-5	mg/kg	7.05	0.002	NS	0.002	--	0.005	0.25
1,3-Dichlorobenzene	SOM02.4	541-73-1	mg/kg	0.19	0.03	NS	0.03	--	0.005	0.25
1,4-Dichlorobenzene	SOM02.4	106-46-7	mg/kg	0.77	0.03	NS	0.03	--	0.005	0.25
2-Butanone (Methyl ethyl ketone)	SOM02.4	78-93-3	mg/kg	25.71	35	NS	26	--	0.01	0.5
2-Hexanone	SOM02.4	591-78-6	mg/kg	4.70	NS	NS	4.7	--	0.01	0.5
4-Methyl-2-pentanone (Methyl-isobutyl ketone)	SOM02.4	108-10-1	mg/kg	19.43	NS	NS	19	--	0.01	0.5
Acetone	SOM02.4	67-64-1	mg/kg	60.03	NS	NS	60	--	0.01	0.5
Benzene	SOM02.4	71-43-2	mg/kg	0.16	0.01	NS	0.01	--	0.005	0.25
Bromochloromethane	SOM02.4	74-97-5	mg/kg	NS	NS	NS	NS	--	0.005	0.25
Bromodichloromethane	SOM02.4	75-27-4	mg/kg	2.46	NS	NS	2.46	--	0.005	0.25
Bromoform	SOM02.4	75-25-2	mg/kg	0.22	75	NS	0.22	--	0.005	0.25
Bromomethane	SOM02.4	74-83-9	mg/kg	0.08	NS	NS	0.08	--	0.005	0.25
Carbon Disulfide	SOM02.4	75-15-0	mg/kg	0.12	NS	NS	0.12	--	0.005	0.25
Carbon Tetrachloride	SOM02.4	56-23-5	mg/kg	1.20	0.17	NS	0.17	--	0.005	0.25
Chlorobenzene	SOM02.4	108-90-7	mg/kg	0.74	0.03	NS	0.03	--	0.005	0.25
Chloroethane	SOM02.4	75-00-3	mg/kg	NS	NS	NS	NS	--	0.005	0.25
Chloroform	SOM02.4	67-66-3	mg/kg	1.89	0.02	NS	0.02	--	0.005	0.25
Chloromethane	SOM02.4	74-87-3	mg/kg	17.80	NS	NS	18	--	0.005	0.25
cis-1,2-Dichloroethene	SOM02.4	156-59-2	mg/kg	NS	0.2	NS	0.2	--	0.005	0.25
cis-1,3-Dichloropropene	SOM02.4	10061-01-5	mg/kg	NS	NS	NS	NS	--	0.005	0.25
Cyclohexane	SOM02.4	110-82-7	mg/kg	NS	NS	NS	NS	--	0.005	0.25
Dibromochloromethane	SOM02.4	124-48-1	mg/kg	0.16	NS	NS	0.16	--	0.005	0.25
Dichlorodifluoromethane	SOM02.4	75-71-8	mg/kg	3.68	NS	NS	4	--	0.005	0.25

Table D-3A. Screening Criteria for Sediment and CLP Reference Limits

Analyte	Analytical Method	CASRN	Units	Sediment Screening Levels			Project Screening Level (4)	CRQLs (5)		
				TCEQ Ecological Screening Values (1)	Protection of Benthic Invertebrates Screening Level (2)	Human Health Sediment Bioaccumulation Screening Level (3)		Low Soil by SIM	Low Soil	Medium Soil
Ethylbenzene	SOM02.4	100-41-4	mg/kg	2.63	0.03	NS	0.03	--	0.005	0.25
Isopropylbenzene (Cumene)	SOM02.4	98-82-8	mg/kg	8.99	NS	NS	9	--	0.005	0.25
Methyl Acetate	SOM02.4	79-20-9	mg/kg	NS	NS	NS	NS	--	0.005	0.25
Methylcyclohexane	SOM02.4	108-87-2	mg/kg	NS	NS	NS	NS	--	0.005	0.25
Methyl tert Butyl Ether	SOM02.4	1634-04-4	mg/kg	NS	100	NS	100	--	0.005	0.25
Methylene Chloride	SOM02.4	75-09-2	mg/kg	15.51	0.018	NS	0.018	--	0.005	0.25
Styrene	SOM02.4	100-42-5	mg/kg	10.24	0.2	NS	0.2	--	0.005	0.25
Tetrachloroethene	SOM02.4	127-18-4	mg/kg	2.74	0.002	NS	0.002	--	0.005	0.25
Toluene	SOM02.4	108-88-3	mg/kg	6.76	0.01	NS	0.01	--	0.005	0.25
trans-1,2-Dichloroethene	SOM02.4	156-60-5	mg/kg	23.95	0.2	NS	0.2	--	0.005	0.25
trans-1,3-Dichloropropene	SOM02.4	10061-02-6	mg/kg	NS	NS	NS	NS	--	0.005	0.25
Trichloroethene	SOM02.4	79-01-6	mg/kg	4.56	0.0078	NS	0.0078	--	0.005	0.25
Trichlorofluoromethane	SOM02.4	75-69-4	mg/kg	1.69	NS	NS	1.69	--	0.005	0.25
Vinyl Chloride	SOM02.4	75-01-4	mg/kg	1.96	0.01	NS	0.01	--	0.005	0.25
m,p-Xylene	SOM02.4	179601-23-1	mg/kg	NS	0.11	NS	0.11	--	0.005	0.25
o-Xylene	SOM02.4	95-47-6	mg/kg	NS	0.089	NS	0.089	--	0.005	0.25
Semivolatile Organic Compounds										
1,1'-Biphenyl	SOM02.4	92-52-4	mg/kg	1.1	NS	NS	1.1	--	0.17	5
1,2,4,5-Tetrachlorobenzene	SOM02.4	95-94-3	mg/kg	0.053	0.01	NS	0.01	--	0.17	5
1,4-Dioxane	SOM02.4	123-91-1	mg/kg	NS	NS	NS	NS	--	0.067	2
2,2'-Oxybis (1-chloropropane)	SOM02.4	108-60-1	mg/kg	NS	NS	NS	NS	--	0.33	10
2,3,4,6-Tetrachlorophenol	SOM02.4	58-90-2	mg/kg	NS	0.01	NS	0.01	--	0.17	5
2,4,5-Trichlorophenol	SOM02.4	95-95-4	mg/kg	NS	0.01	NS	0.01	--	0.17	5
2,4,6-Trichlorophenol	SOM02.4	88-06-2	mg/kg	NS	0.01	NS	0.01	--	0.17	5
2,4-Dichlorophenol	SOM02.4	120-83-2	mg/kg	NS	0.01	NS	0.01	--	0.17	5
2,4-Dimethylphenol	SOM02.4	105-67-9	mg/kg	NS	NS	NS	NS	--	0.17	5
2,4-Dinitrophenol	SOM02.4	51-28-5	mg/kg	NS	NS	NS	NS	--	0.33	10
2,4-Dinitrotoluene	SOM02.4	121-14-2	mg/kg	1.342	NS	NS	1.342	--	0.17	5
2,6-Dinitrotoluene	SOM02.4	606-20-2	mg/kg	NS	NS	NS	NS	--	0.17	5
2-Chloronaphthalene	SOM02.4	91-58-7	mg/kg	NS	0.25	NS	0.25	--	0.17	5
2-Chlorophenol	SOM02.4	95-57-8	mg/kg	NS	0.055	NS	0.055	--	0.17	5
2-Methylnaphthalene	SOM02.4	91-57-6	mg/kg	0.020	NS	NS	0.0202	0.0033	0.17	5
2-Methylphenol	SOM02.4	95-48-7	mg/kg	NS	0.5	NS	0.5	--	0.33	10
2-Nitroaniline	SOM02.4	88-74-4	mg/kg	NS	NS	NS	NS	--	0.17	5
2-Nitrophenol	SOM02.4	88-75-5	mg/kg	NS	NS	NS	NS	--	0.17	5
3,3'-Dichlorobenzidine	SOM02.4	91-94-1	mg/kg	NS	NS	NS	NS	--	0.33	10
3-Nitroaniline	SOM02.4	99-09-2	mg/kg	NS	NS	NS	NS	--	0.33	10
4,6-Dinitro-2-methylphenol (4,6-Dinitro-o-cresol)	SOM02.4	534-52-1	mg/kg	NS	NS	NS	NS	--	0.33	10
4-Bromophenyl-phenylether	SOM02.4	101-55-3	mg/kg	NS	NS	NS	NS	--	0.17	5

Table D-3A. Screening Criteria for Sediment and CLP Reference Limits

Analyte	Analytical Method	CASRN	Units	Sediment Screening Levels			Project Screening Level [4]	CRQLs [5]		
				TCEQ Ecological Screening Values [1]	Protection of Benthic Invertebrates Screening Level [2]	Human Health Sediment Bioaccumulation Screening Level [3]		Low Soil by SIM	Low Soil	Medium Soil
4-Chloro-3-methylphenol	SOM02.4	59-50-7	mg/kg	0.940	NS	NS	0.94	--	0.17	5
4-Chloroaniline	SOM02.4	106-47-8	mg/kg	NS	0.005	NS	0.005	--	0.33	10
4-Chlorophenyl-phenylether	SOM02.4	7005-72-3	mg/kg	NS	NS	NS	NS	--	0.17	5
4-Methylphenol	SOM02.4	106-44-5	mg/kg	0.260	NS	NS	0.26	--	0.33	10
4-Nitroaniline	SOM02.4	100-01-6	mg/kg	NS	NS	NS	NS	--	0.33	10
4-Nitrophenol	SOM02.4	100-02-7	mg/kg	NS	NS	NS	NS	--	0.33	10
Acenaphthene	SOM02.4	83-32-9	mg/kg	0.007	0.00671	NS	0.00671	0.0033	0.17	5
Acetophenone	SOM02.4	98-86-2	mg/kg	NS	NS	NS	NS	--	0.33	10
Acenaphthylene	SOM02.4	208-96-8	mg/kg	0.006	0.00587	NS	0.00587	0.0033	0.17	5
Anthracene	SOM02.4	120-12-7	mg/kg	0.057	0.0572	NS	0.0572	0.0033	0.17	5
Atrazine	SOM02.4	1912-24-9	mg/kg	0.000	0.0002	NS	0.0002	--	0.33	10
Benzaldehyde	SOM02.4	100-52-7	mg/kg	NS	NS	NS	NS	--	0.33	10
Benzo(a)anthracene	SOM02.4	56-55-3	mg/kg	0.108	0.0317	NS	0.0317	0.0033	0.17	5
Benzo(a)pyrene	SOM02.4	50-32-8	mg/kg	0.150	0.0319	NS	0.0319	0.0033	0.17	5
Benzo(b)fluoranthene	SOM02.4	205-99-2	mg/kg	NS	NS	NS	NS	0.0033	0.17	5
Benzo(g,h,i)perylene	SOM02.4	191-24-2	mg/kg	NS	0.17	NS	0.17	0.0033	0.17	5
Benzo(k)fluoranthene	SOM02.4	207-08-9	mg/kg	NS	0.0272	NS	0.0272	0.0033	0.17	5
bis(2-Chloroethoxy)methane	SOM02.4	111-91-1	mg/kg	NS	NS	NS	NS	--	0.17	5
bis(2-Chloroethyl)ether	SOM02.4	111-44-4	mg/kg	NS	NS	NS	NS	--	0.33	10
bis(2-Ethylhexyl)phthalate	SOM02.4	117-81-7	mg/kg	0.500	0.1	NS	0.1	--	0.17	5
Butylbenzylphthalate	SOM02.4	85-68-7	mg/kg	11	0.1	NS	0.1	--	0.17	5
Caprolactam	SOM02.4	105-60-2	mg/kg	NS	NS	NS	NS	--	0.33	10
Carbazole	SOM02.4	86-74-8	mg/kg	NS	NS	NS	NS	--	0.33	10
Chrysene	SOM02.4	218-01-9	mg/kg	0.166	0.0571	NS	0.0571	0.0033	0.17	5
Di-n-butylphthalate	SOM02.4	84-74-2	mg/kg	11	0.11	NS	0.11	--	0.17	5
Di-n-octylphthalate	SOM02.4	117-84-0	mg/kg	0.039	0.1	NS	0.039	--	0.33	10
Dibenz(a,h)anthracene	SOM02.4	53-70-3	mg/kg	0.033	0.00622	NS	0.00622	0.0033	0.17	5
Dibenzofuran	SOM02.4	132-64-9	mg/kg	0.200	5.1	NS	0.2	--	0.17	5
Diethylphthalate	SOM02.4	84-66-2	mg/kg	0.630	0.53	NS	0.53	--	0.17	5
Dimethylphthalate	SOM02.4	131-11-3	mg/kg	1.490	1	NS	1	--	0.17	5
Fluoranthene	SOM02.4	206-44-0	mg/kg	0.423	0.111	62	0.111	0.0033	0.33	10
Fluorene	SOM02.4	86-73-7	mg/kg	0.077	0.0774	NS	0.0774	0.0033	0.17	5
Hexachlorobenzene	SOM02.4	118-74-1	mg/kg	0.020	0.0014	0.0023	0.0014	--	0.17	5
Hexachlorobutadiene	SOM02.4	87-68-3	mg/kg	0.055	NS	NS	0.055	--	0.17	5
Hexachlorocyclopentadiene	SOM02.4	77-47-4	mg/kg	0.067	NS	NS	0.067	--	0.33	10
Hexachloroethane	SOM02.4	67-72-1	mg/kg	0.225	NS	NS	0.225	--	0.17	--
Indeno(1,2,3-cd)pyrene	SOM02.4	193-39-5	mg/kg	NS	0.0173	NS	0.0173	0.0033	0.17	5
Isophorone	SOM02.4	78-59-1	mg/kg	NS	NS	NS	NS	--	0.17	5
N-Nitroso-di-n-propylamine	SOM02.4	621-64-7	mg/kg	NS	NS	NS	NS	--	0.17	5
N-Nitrosodiphenylamine	SOM02.4	86-30-6	mg/kg	NS	NS	NS	NS	--	0.17	5

Table D-3A. Screening Criteria for Sediment and CLP Reference Limits

Analyte	Analytical Method	CASRN	Units	Sediment Screening Levels			Project Screening Level (4)	CRQLs (5)		
				TCEQ Ecological Screening Values (1)	Protection of Benthic Invertebrates Screening Level (2)	Human Health Sediment Bioaccumulation Screening Level (3)		Low Soil by SIM	Low Soil	Medium Soil
Naphthalene	SOM02.4	91-20-3	mg/kg	0.176	0.176	NS	0.176	0.0033	0.17	5
Nitrobenzene	SOM02.4	98-95-3	mg/kg	2.1	NS	NS	2.1	--	0.17	5
Pentachlorophenol	SOM02.4	87-86-5	mg/kg	1.200	0.01	0.03	0.01	0.0067	0.33	10
Phenanthrene	SOM02.4	85-01-8	mg/kg	0.204	0.0419	NS	0.0419	0.0033	0.17	5
Phenol	SOM02.4	108-95-2	mg/kg	0.120	0.048	NS	0.048	--	0.33	10
Pyrene	SOM02.4	129-00-0	mg/kg	0.195	0.053	47	0.053	0.0033	0.17	5
Polycyclic Aromatic Hydrocarbons										
Acenaphthene	SOM02.4	83-32-9	mg/kg	0.007	0.00671	NS	0.0067	0.0033	0.17	5
Acenaphthylene	SOM02.4	208-96-8	mg/kg	0.006	0.00587	NS	0.00587	0.0033	0.17	5
Anthracene	SOM02.4	120-12-7	mg/kg	0.057	0.0572	NS	0.0572	0.0033	0.17	5
Benzo(a)anthracene	SOM02.4	56-55-3	mg/kg	0.108	0.0317	NS	0.0317	0.0033	0.17	5
Benzo(a)pyrene	SOM02.4	50-32-8	mg/kg	0.150	0.0319	NS	0.0319	0.0033	0.17	5
Benzo(b)fluoranthene	SOM02.4	205-99-2	mg/kg	NS	NS	NS	NS	0.0033	0.17	5
Benzo(g,h,i)perylene	SOM02.4	191-24-2	mg/kg	NS	0.17	NS	0.17	0.0033	0.17	5
Benzo(k)fluoranthene	SOM02.4	207-08-9	mg/kg	NS	0.0272	NS	0.0272	0.0033	0.17	5
Chrysene	SOM02.4	218-01-9	mg/kg	0.166	0.0571	NS	0.0571	0.0033	0.17	5
Dibenz(a,h)anthracene	SOM02.4	53-70-3	mg/kg	0.033	0.00622	NS	0.00622	0.0033	0.17	5
Fluoranthene	SOM02.4	206-44-0	mg/kg	0.423	0.111	62	0.111	0.0033	0.33	10
Fluorene	SOM02.4	86-73-7	mg/kg	0.077	0.0774	NS	0.0774	0.0033	0.17	5
Indeno(1,2,3-cd)pyrene	SOM02.4	193-39-5	mg/kg	NS	0.0173	NS	0.0173	0.0033	0.17	5
Naphthalene	SOM02.4	91-20-3	mg/kg	0.176	0.176	NS	0.176	0.0033	0.17	5
Phenanthrene	SOM02.4	85-01-8	mg/kg	0.204	0.0419	NS	0.0419	0.0033	0.17	5
Pyrene	SOM02.4	129-00-0	mg/kg	0.195	0.053	47	0.053	0.0033	0.17	5
2-Methylnaphthalene	SOM02.4	91-57-6	mg/kg	0.020	NS	NS	0.0202	0.0033	0.17	5
Polychlorinated Biphenyls										
Aroclor-1016	SOM02.4	12674-11-2	mg/kg	0.007	NS	NS	0.007	--	0.033	--
Aroclor-1221	SOM02.4	11104-28-2	mg/kg	NS	NS	NS	NS	--	0.033	--
Aroclor-1232	SOM02.4	11141-16-5	mg/kg	NS	NS	NS	NS	--	0.033	--
Aroclor-1242	SOM02.4	53469-21-9	mg/kg	NS	NS	NS	NS	--	0.033	--
Aroclor-1248	SOM02.4	12672-29-6	mg/kg	0.03	NS	NS	0.03	--	0.033	--
Aroclor-1254	SOM02.4	11097-69-1	mg/kg	NS	0.06	NS	0.06	--	0.033	--
Aroclor-1260	SOM02.4	11096-82-5	mg/kg	0.005	NS	NS	0.005	--	0.033	--
Aroclor-1262	SOM02.4	37324-23-5	mg/kg	NS	NS	NS	NS	--	0.033	--
Aroclor-1268	SOM02.4	11100-14-4	mg/kg	NS	NS	NS	NS	--	0.033	--
Total PCBs	--	1336-36-3	mg/kg	0.0598	0.0341	0.000048	0.000048	--	--	--
TAL Metals ICP-MS										
Antimony	ISM02.4	7440-36-0	mg/kg	0.3	3	NS	0.3	--	1	--
Arsenic	ISM02.4	7440-38-2	mg/kg	9.79	5.9	7	5.9	--	0.5	--
Barium	ISM02.4	7440-39-3	mg/kg	NS	NS	NS	NS	--	5	--
Beryllium	ISM02.4	7440-41-7	mg/kg	NS	NS	NS	NS	--	0.5	--

Table D-3A. Screening Criteria for Sediment and CLP Reference Limits

Analyte	Analytical Method	CASRN	Units	Sediment Screening Levels			Project Screening Level (4)	CRQLs (5)		
				TCEQ Ecological Screening Values (1)	Protection of Benthic Invertebrates Screening Level (2)	Human Health Sediment Bioaccumulation Screening Level (3)		Low Soil by SIM	Low Soil	Medium Soil
Cadmium	ISM02.4	7440-43-9	mg/kg	0.99	0.596	1	0.596	--	0.5	--
Chromium	ISM02.4	7440-47-3	mg/kg	43.4	37.3	NS	37.3	--	1	--
Cobalt	ISM02.4	7440-48-4	mg/kg	50	50	NS	50	--	0.5	--
Copper	ISM02.4	7440-50-8	mg/kg	31.6	31.6	NS	31.6	--	1	--
Lead	ISM02.4	7439-92-1	mg/kg	35.8	35	17	17	--	0.5	--
Manganese	ISM02.4	7439-96-5	mg/kg	460	460	NS	460	--	0.5	--
Nickel	ISM02.4	7440-02-0	mg/kg	22.7	18	NS	18	--	0.5	--
Selenium	ISM02.4	7782-49-2	mg/kg	NS	NS	2	2	--	2.5	--
Silver	ISM02.4	7440-22-4	mg/kg	1	0.5	NS	0.5	--	0.5	--
Thallium	ISM02.4	7440-28-0	mg/kg	NS	NS	NS	NS	--	0.5	--
Vanadium	ISM02.4	7440-62-2	mg/kg	NS	NS	NS	NS	--	2.5	--
Zinc	ISM02.4	7440-66-6	mg/kg	121	121	NS	121	--	1	--
TAL Metals ICP-AES										
Aluminum	ISM02.4	7429-90-5	mg/kg	NS	25,500	NS	25,500	--	20	--
Calcium	ISM02.4	7440-70-2	mg/kg	NS	NS	NS	NS	--	500	--
Iron	ISM02.4	7439-89-6	mg/kg	20,000	20,000	NS	20,000	--	10	--
Magnesium	ISM02.4	7439-95-4	mg/kg	NS	NS	NS	NS	--	500	--
Potassium	ISM02.4	7440-09-7	mg/kg	NS	NS	NS	NS	--	500	--
Sodium	ISM02.4	7440-23-5	mg/kg	NS	NS	NS	NS	--	500	--
Miscellaneous										
Mercury	ISM02.4	7439-97-6	mg/kg	0.18	0.174	0.07	0.07	--	0.1	--

NOTES:

1. Ecological Screening Values for Freshwater Sediment from TCEQ's *Conducting Ecological Risk Assessments at Remediation Sites in Texas.* August 2018. https://www.tceq.texas.gov/remediation/eco/eco.html
2. Benthic protection based on the NOAA SQuIRTs values listed in Buchman (NOAA 2008), consensus-based unless not available, otherwise the lowest of listed screening values are presented.
3. State of Oregon Department of Environmental Quality, *Guidance for Assessing Bioaccumulative Chemicals of Concern in Sediment* (2007), Table A-1a. Used for chemicals bioaccumulating into fish with subsequent human ingestion. Based on subsistence/tribal ingestion rate.
4. The minimum value was selected as the project screening level.
5. Contract-required Quantitation Limits (CRQL) for U.S. Environmental Protection Agency (EPA) Contract Laboratory Program (CLP)

Project screening levels are either below the CRQL or not a reported analyte for the prescribed analytical method.

mg/kg = Milligram(s) per kilogram
NS = Not specified
SL = Screening Level
CASRN = Chemical Abstracts Service Registry Number
PCLs = Protective Concentration Levels
-- = Not provided
SIM = Selective ion monitoring

Table D-3B. Screening Criteria for Sediment and Private Laboratory Reference Limits

Analyte	Analytical Method	CASRN	Units	Sediment Screening Levels			Project Screening Level (4)	Achievable Laboratory Limits (5)	
				TCEQ Ecological Screening Values (1)	Protection of Benthic Invertebrates Screening Level (2)	Human Health Sediment Bioaccumulation Screening Level (3)		RL	DL
Total Petroleum Hydrocarbons									
TPH as Gasoline Range Organics (C_6 to C12)	TX1005	NS	mg/kg	NS	NS	NS	NS	20	10
TPH as Diesel Range Organics (C12 to C_{28})	TX1005	NS	mg/kg	NS	NS	NS	NS	20	10
TPH as Oil Range Organics (C_{28} to C_{35})	TX1005	NS	mg/kg	NS	NS	NS	NS	20	10
Miscellaneous									
AVS/SEM	EPA 821/R-91-100 SW 6010C/9034	NS	µmol/g	NS	NS	NS	NS	2	0.63
Hexavalent chromium	SW3060/7199A	18540-29-9	mg/kg	NS	NS	NS	NS	0.4	0.14
Cyanide	SW9012B	57-12-5	mg/kg	NS	NS	NS	NS	0.5	0.18
pH	SW9045D	NS	S.U.	NS	NS	NS	NS	0.01	0.01
ORP	ASTM D1498	NS	mV	NS	NS	NS	NS	10	10
Total organic carbon	SW9060A	NS	mg/kg	NS	NS	NS	NS	300	100
Perfluorooctanoic sulfonic acid (1-Octanesulfonic acid, heptadecafluoro-1-)	EPA Method 537 Modified	1763-23-1	mg/kg	0.114	NS	NS	0.114	0.0009	0.0003
Perfluoroundecanoic acid (Undecanoic acid, uncosafluoro-)	EPA Method 537 Modified	2058-94-8	mg/kg	NS	NS	NS	NS	0.0006	0.0002
Perfluoropentanoic acid (Pentanoic acid, nonafluoro-)	EPA Method 537 Modified	2706-90-3	mg/kg	NS	NS	NS	NS	0.0006	0.0002
Perfluorohexanoic acid (Hexanoic acid, undecafluoro-)	EPA Method 537 Modified	307-24-4	mg/kg	NS	NS	NS	NS	0.0006	0.0002
Perfluorododecanoic acid (Dodecanoic acid, tricosafluoro-)	EPA Method 537 Modified	307-55-1	mg/kg	NS	NS	NS	NS	0.0006	0.0002
Perfluorooctanoic acid (Octanoic acid, pentadecafluoro-)	EPA Method 537 Modified	335-67-1	mg/kg	NS	NS	NS	NS	0.0006	0.0002
Perfluorodecanoic acid (Decanoic acid, nonadecafluoro-)	EPA Method 537 Modified	335-76-2	mg/kg	NS	NS	NS	NS	0.0006	0.0002
Perfluorodecane sulfonic acid (1-Decanesulfonic acid, heneicosafluoro-)	EPA Method 537 Modified	335-77-3	mg/kg	NS	NS	NS	NS	--	--
Perfluorohexane sulfonic acid (1-Hexanesulfonic acid, triddecafluoro-)	EPA Method 537 Modified	355-46-4	mg/kg	NS	NS	NS	NS	0.0006	0.0002
Perfluorobutyric acid (Butanoic acid, heptafluoro-)	EPA Method 537 Modified	375-22-4	mg/kg	NS	NS	NS	NS	0.0006	0.0002
Perfluorobutane sulfonic acid (1-Butanesulfonic acid, nonafluoro-)	EPA Method 537 Modified	375-73-5	mg/kg	NS	NS	NS	NS	0.0006	0.0002
Perfluoroheptanoic acid (Heptanoic acid, tridecafluoro-)	EPA Method 537 Modified	375-85-9	mg/kg	NS	NS	NS	NS	0.0006	0.0002
Perfluorononanoic acid (Nonanoic acid, heptadecafluoro-)	EPA Method 537 Modified	375-95-1	mg/kg	NS	NS	NS	NS	0.0006	0.0002

Table D-3B. Screening Criteria for Sediment and Private Laboratory Reference Limits

Analyte	Analytical Method	CASRN	Units	Sediment Screening Levels			Project Screening Level [4]	Achievable Laboratory Limits [5]	
				TCEQ Ecological Screening Values[1]	Protection of Benthic Invertebrates Screening Level [2]	Human Health Sediment Bioaccumulation Screening Level [3]		RL	DL
Perfluorotetradecanoic acid (Tetradecanoic acid, heptacosafluoro-)	EPA Method 537 Modified	376-06-7	mg/kg	NS	NS	NS	NS	0.0006	0.0002
Perfluorotridecanoic acid (Tridecanoic acid, pentacosafluoro-)	EPA Method 537 Modified	72629-94-8	mg/kg	NS	NS	NS	NS	0.0006	0.0002
Perfluorooctane sulfonamide (1-Octanesulfonamide, hetpadecafluoro-)	EPA Method 537 Modified	754-91-6	mg/kg	NS	NS	NS	NS	0.0006	0.0002

NOTES:

1. Ecological Screening Values for Freshwater Sediment from TCEQ's *Conducting Ecological Risk Assessments at Remediation Sites in Texas.* August 2018. https://www.tceq.texas.gov/remediation/eco/eco.html
2. Benthic protection based on the NOAA SQuIRTs values listed in Buchman (2008), consensus-based unless not available, otherwise the lowest of listed screening values are presented.
3. State of Oregon Department of Environmental Quality, *Guidance for Assessing Bioaccumulative Chemicals of Concern in Sediment* (2007), Table A-1a. Used for chemicals bioaccumulating into fish with subsequent human ingestion.
4. The minimum value was selected as the project screening level.
5. Achievable laboratory limits are for Eurofins Lancaster Laboratories Environmental, LLC., Lancaster, Pennsylvania.

mg/kg = Milligram(s) per kilogram
CASRN = Chemical Abstracts Service Registry Number
DL = Detection limit
LOQ = Level of Quantitation
NS = Not specified
PCLs = Protective Concentration Levels
RL = Reporting Limit
SL = Screening Level
S.U. = Standard Unit
µmol/g = micromole per gram

Table D-4A. Screening Criteria for Surface Water and Contract Laboratory Program Reference Limits

Analyte	Analytical Method	CASRN	Units	c/nc	National Recommended Water Quality Criteria (1)			TRRP Ecological Benchmarks (RG-263)		Texas Surface Water Quality Standards (2)		Project Screening Level (3)	CRQLs (4)	
					Aquatic Life Freshwater Acute	Aquatic Life Freshwater Chronic	Human Health for Consumption Organism Only	Aquatic Life Freshwater Acute	Aquatic Life Freshwater Chronic	Human Health for Water and Fish Consumption	Human Health for Fish Only Consumption		Low Water by SIM	Low Water
Volatile Organic Compounds														
1,1,1,2-Tetrachloroethane	SOM02.4	630-20-6	µg/L	c	NS	NS	NS	NS	NS	NS	NS	NS	--	5
1,1,1-Trichloroethane	SOM02.4	71-55-6	µg/L	nc	NS	NS	200,000	14,720	4,910	200	956,663	200	--	5
1,1,2-Trichloro-1,2,2-trifluoroethane	SOM02.4	76-13-1	µg/L	-	NS	NS	NS	1,239	207	NS	NS	207	--	5
1,1,2,2-Tetrachloroethane	--	79-34-5	µg/L	c	NS	NS	3	NS	NS	1.7	40	1.7	--	--
1,1,2-Trichloroethane	SOM02.4	79-00-5	µg/L	c	NS	NS	8.9	5,400	900	5	295	5	--	5
1,1-Dichloroethane	SOM02.4	75-34-3	µg/L	c	NS	NS	NS	640	210	NS	NS	210	--	5
1,1-Dichloroethene	SOM02.4	75-35-4	µg/L	nc	NS	NS	20,000	9,080	3,030	7	23,916	7	--	5
1,1-Dichloropropene	--	563-58-6	µg/L	-	NS	NS	NS	NS	NS	NS	NS	NS	--	--
1,2,3-Trichlorobenzene	SOM02.4	87-61-6	µg/L	nc	NS	NS	NS	NS	8	NS	NS	8	--	5
1,2,3-Trichloropropane	--	96-18-4	µg/L	c	NS	NS	NS	NS	NS	NS	NS	NS	--	--
1,2,4-Trichlorobenzene	SOM02.4	120-82-1	µg/L	c	NS	NS	0.076	309	51.5	NS	NS	0.076	--	5
1,2,4-Trimethylbenzene	--	95-63-6	µg/L	nc	NS	NS	NS	462	77	NS	NS	77	--	--
1,2-Dibromo-3-chloropropane	SOM02.4	96-12-8	µg/L	c	NS	NS	NS	NS	NS	NS	NS	NS	--	5
1,2-Dibromoethane (EDB)	SOM02.4	106-93-4	µg/L	c	NS	NS	NS	NS	NS	0.17	4.24	0.17	--	5
1,2-Dibromoethane (EDB)	--	106-93-4	µg/L	c	NS	NS	NS	NS	NS	NS	NS	NS	--	--
1,2-Dichlorobenzene	SOM02.4	95-50-1	µg/L	nc	NS	NS	3,000	660	110	600	4,336	110	--	5
1,2-Dichloroethane	SOM02.4	107-06-2	µg/L	c	NS	NS	650	37,680	12,560	5	553	5	--	5
1,2-Dichloropropane	SOM02.4	78-87-5	µg/L	c	NS	NS	31	17,960	5,990	5	226	5	--	5
1,3-Dichloropropane	--	142-28-9	µg/L	nc	NS	NS	NS	NS	NS	NS	NS	NS	--	--
1,3-Dichlorobenzene	SOM02.4	541-73-1	µg/L	-	NS	NS	10	153	85	473	1,445	10	--	5
1,3,5-Trimethylbenzene	--	108-67-8	µg/L	nc	NS	NS	NS	424.5	71	NS	NS	71	--	--
1,4-Dichlorobenzene	SOM02.4	106-46-7	µg/L	c	NS	NS	900	660	110	75	NS	75	--	5
2-Butanone (Methyl Ethyl Ketone)	SOM02.4	78-93-3	µg/L	nc	NS	NS	NS	254,420	42,400	13865	9.92E+05	13865	--	10
2-Chlorotoluene	--	95-49-8	µg/L	nc	NS	NS	NS	NS	NS	NS	NS	NS	--	--
2,2-Dichloropropane	--	594-20-7	µg/L	-	NS	NS	NS	NS	NS	NS	NS	NS	--	--
2-Hexanone	SOM02.4	591-78-6	µg/L	nc	NS	NS	NS	36,790	6,130	NS	NS	6130	--	10
4-Chlorotoluene	SOM02.4	106-43-4	µg/L	nc	NS	NS	NS	NS	NS	NS	NS	NS	--	NS
4-Methyl-2-pentanone (Methyl isobutyl ketone)	SOM02.4	108-10-1	µg/L	nc	NS	NS	NS	158,100	26,400	NS	NS	26400	--	10
Acetone	SOM02.4	67-64-1	µg/L	nc	NS	NS	NS	607,400	101,200	NS	NS	101200	--	10
Acrolein	--	107-02-8	µg/L	nc	3	3	400	3	3	NS	NS	3	--	--
Acrylonitrile	--	107-13-1	µg/L	c	NS	NS	7	2,760	920	0.8	3.8	0.8	--	--
Benzene	SOM02.4	71-43-2	µg/L	c	NS	NS	16	2,300	130	5	513	5	--	5
Bromobenzene	--	108-86-1	µg/L	nc	NS	NS	NS	NS	NS	NS	NS	NS	--	--
Bromochloromethane	SOM02.4	74-97-5	µg/L	nc	NS	NS	NS	NS	NS	NS	NS	NS	--	5
Bromodichloromethane	SOM02.4	75-27-4	µg/L	c	NS	NS	27	12,962	2,160	10.2	322	10.2	--	5
Bromoform	SOM02.4	75-25-2	µg/L	c	NS	NS	120	897	149	69.1	2,175	69.1	--	5

Table D-4A. Screening Criteria for Surface Water and Contract Laboratory Program Reference Limits

Analyte	Analytical Method	CASRN	Units	c/nc	National Recommended Water Quality Criteria (1)			TRRP Ecological Benchmarks (RG-263)		Texas Surface Water Quality Standards (2)		Project Screening Level (3)	CRQLs (4)	
					Aquatic Life Freshwater Acute	Aquatic Life Freshwater Chronic	Human Health for Consumption Organism Only	Aquatic Life Freshwater Acute	Aquatic Life Freshwater Chronic	Human Health for Water and Fish Consumption	Human Health for Fish Only Consumption		Low Water by SIM	Low Water
Bromomethane	SOM02.4	74-83-9	µg/L	nc	NS	NS	10,000	660	110	NS	NS	110	--	5
Carbon Disulfide	SOM02.4	75-15-0	µg/L	nc	NS	NS	NS	700	105	NS	NS	105	--	5
Carbon Tetrachloride	SOM02.4	56-23-5	µg/L	c	NS	NS	5	180	9.8	4.3	30.5	4.3	--	5
Chlorobenzene	SOM02.4	108-90-7	µg/L	nc	NS	NS	800	1,100	64	100	5,201	64	--	5
Chloroethane	SOM02.4	75-00-3	µg/L	nc	NS	NS	NS	NS	NS	NS	NS	NS	--	5
Chloroform	SOM02.4	67-66-3	µg/L	c	NS	NS	2000	5,370	1,790	70	7,143	70	--	5
Chloromethane	SOM02.4	74-87-3	µg/L	nc	NS	NS	NS	165,000	28,000	NS	NS	28000	--	5
cis-1,2-Dichloroethene	SOM02.4	156-59-2	µg/L	nc	NS	NS	NS	NS	NS	NS	NS	NS	--	5
cis-1,3-Dichloropropene	SOM02.4	10061-01-5	µg/L	c	NS	NS	NS	NS	NS	NS	NS	NS	--	5
Cyclohexane	SOM02.4	110-82-7	µg/L	-	NS	NS	NS	NS	NS	NS	NS	NS	--	5
Dibromochloromethane	SOM02.4	124-48-1	µg/L	c	NS	NS	21	771	129	7.6	239	7.6	--	5
Dibromomethane	--	74-95-3	µg/L	nc	NS	NS	NS	NS	NS	NS	NS	NS	--	--
Dichlorodifluoromethane	SOM02.4	75-71-8	µg/L	nc	NS	NS	NS	11,780	1,963	NS	NS	1963	--	5
Ethylbenzene	SOM02.4	100-41-4	µg/L	c	NS	NS	130	3,000	1,000	700	7,143	130	--	5
Hexachlorobutadiene	--	87-68-3	µg/L	c	NS	NS	NS	131	4.36	NS	NS	4.36	--	--
Methyl Acetate	SOM02.4	79-20-9	µg/L	-	NS	NS	NS	NS	NS	NS	NS	NS	--	5
Methylcyclohexane	SOM02.4	108-87-2	µg/L	-	NS	NS	NS	NS	NS	NS	NS	NS	--	5
Isopropylbenzene (Cumene)	SOM02.4	98-82-8	µg/L	nc	NS	NS	NS	1530	255	NS	NS	255	--	5
Methyl tert-Butyl Ether	SOM02.4	1634-04-4	µg/L	c	NS	NS	NS	151,000	51,000	NS	NS	51000	--	5
Methylene Chloride	SOM02.4	75-09-2	µg/L	c	NS	NS	1000	66,000	22,000	5	22,222	5	--	5
n-Butylbenzene	--	104-51-8	µg/L	nc	NS	NS	NS	213	36	NS	NS	36	--	--
n-Propylbenzene	--	103-65-1	µg/L	nc	NS	NS	NS	385	64	NS	NS	64	--	--
Naphthalene	--	91-20-3	µg/L	c	NS	NS	NS	1,480	250	NS	NS	250	--	--
p-Isopropyltoluene	--	99-87-6	µg/L	nc	NS	NS	NS	254	42	NS	NS	42	--	--
sec-Butylbenzene	--	135-98-8	µg/L	nc	NS	NS	NS	246	41	NS	NS	41	--	--
Styrene	SOM02.4	100-42-5	µg/L	nc	NS	NS	NS	7,515.00	1,250.00	NS	NS	1250	--	5
tert-Butylbenzene	--	98-06-6	µg/L	nc	NS	NS	NS	289	48	NS	NS	48	--	--
Tetrachloroethene	SOM02.4	127-18-4	µg/L	c	NS	NS	29	3,840	1,280	5	525	5	--	5
Toluene	SOM02.4	108-88-3	µg/L	nc	NS	NS	520	10,210	3,400	1,000	NS	520	--	5
trans-1,2-Dichloroethene	SOM02.4	156-60-5	µg/L	nc	NS	NS	4,000	66,000	22,000	NS	NS	4000	--	5
trans-1,3-Dichloropropene	SOM02.4	10061-02-6	µg/L	c	NS	NS	NS	NS	NS	NS	NS	NS	--	5
Trichloroethene	SOM02.4	79-01-6	µg/L	c	NS	NS	7	9,000	3,000	5	82	5	--	5
Trichlorofluoromethane	SOM02.4	75-69-4	µg/L	nc	NS	NS	NS	5,225	871	NS	NS	871	--	5
Vinyl Acetate	--	108-05-4	µg/L	nc	NS	NS	NS	280	16	NS	NS	16	--	--
Vinyl Chloride	SOM02.4	75-01-4	µg/L	c	NS	NS	1.6	16,900	2,820	0.25	24	0.25	--	5
m,p-Xylene	SOM02.4	179601-23-1	µg/L	nc	NS	NS	NS	32	1.8	NS	NS	1.8	--	5
o-Xylene	SOM02.4	95-47-6	µg/L	nc	NS	NS	NS	NS	NS	NS	NS	NS	--	5

Table D-4A. Screening Criteria for Surface Water and Contract Laboratory Program Reference Limits

Analyte	Analytical Method	CASRN	Units	c/nc	National Recommended Water Quality Criteria (1)			TRRP Ecological Benchmarks (RG-263)		Texas Surface Water Quality Standards (2)		Project Screening Level (3)	CRQLs (4)	
					Aquatic Life Freshwater Acute	Aquatic Life Freshwater Chronic	Human Health for Consumption Organism Only	Aquatic Life Freshwater Acute	Aquatic Life Freshwater Chronic	Human Health for Water and Fish Consumption	Human Health for Fish Only Consumption		Low Water by SIM	Low Water
Xylene (Total)	--	1330-20-7	µg/L	nc	NS	NS	NS	4,020	1,340	NS	NS	1340	--	--
Semivolatile Organic Compounds														
1,1'-Biphenyl	SOM02.4	92-52-4	µg/L	nc	NS	NS	NS	NS	14	NS	NS	14	--	5
1,2,4,5-Tetrachlorobenzene	SOM02.4	95-94-3	µg/L	nc	NS	NS	0.03	96	3.2	0.65	0.71	0.03	--	5
1,4-Dioxane	SOM02.4	123-91-1	µg/L	c	NS	NS	NS	NS	NS	NS	NS	NS	--	2
2,2'-Oxybis (1-chloropropane)	SOM02.4	108-60-1	µg/L	nc	NS	NS	4,000	37,847	6,308	NS	NS	4000	--	10
2,3,4,6-Tetrachlorophenol	SOM02.4	58-90-2	µg/L	nc	NS	NS	NS	NS	NS	NS	NS	NS	--	5
2,4,5-Trichlorophenol	SOM02.4	95-95-4	µg/L	nc	NS	NS	600	136	64	1,194	2,435	64	--	5
2,4,6-Trichlorophenol	SOM02.4	88-06-2	µg/L	c	NS	NS	2.8	81	13.5	NS	NS	2.8	--	5
2,4-Dichlorophenol	SOM02.4	120-83-2	µg/L	nc	NS	NS	60	510	85	NS	NS	60	--	5
2,4-Dimethylphenol	SOM02.4	105-67-9	µg/L	nc	NS	NS	3,000	630	105	257	571	105	--	5
2,4-Dinitrophenol	SOM02.4	51-28-5	µg/L	nc	NS	NS	300	186	31	NS	NS	31	--	10
2,4-Dinitrotoluene	SOM02.4	121-14-2	µg/L	c	NS	NS	2	7,290	1,220	NS	NS	1.7	--	5
2,6-Dinitrotoluene	SOM02.4	606-20-2	µg/L	c	NS	NS	NS	NS	NS	NS	NS	NS	--	5
2-Chloronaphthalene	SOM02.4	91-58-7	µg/L	nc	NS	NS	1,000	323	54	NS	NS	54	--	5
2-Chlorophenol	SOM02.4	95-57-8	µg/L	nc	NS	NS	800	780	130	NS	NS	130	--	5
2-Methylnaphthalene	SOM02.4	91-57-6	µg/L	nc	NS	NS	NS	380	63	NS	NS	63	0.1	5
2-Methylphenol	SOM02.4	95-48-7	µg/L	nc	NS	NS	NS	3,360	560	NS	NS	560	--	10
2-Nitroaniline	SOM02.4	88-74-4	µg/L	nc	NS	NS	NS	NS	NS	NS	NS	NS	--	5
2-Nitrophenol	SOM02.4	88-75-5	µg/L	c	NS	NS	NS	5,753	959	NS	NS	959	--	5
3,3'-Dichlorobenzidine	SOM02.4	91-94-1	µg/L	c	NS	NS	0.15	315	53	0.32	0.44	0.15	--	5
3-Methylphenol	SOM02.4	108-39-4	µg/L	nc	NS	NS	NS	NS	NS	NS	NS	NS	--	5
3-Nitroaniline	SOM02.4	99-09-2	µg/L	nc	NS	NS	NS	NS	NS	NS	NS	NS	--	10
4,6-Dinitro-2-methylphenol	SOM02.4	534-52-1	µg/L	nc	NS	NS	NS	69	12	NS	NS	12	--	10
4-Bromophenyl-phenylether	SOM02.4	101-55-3	µg/L	-	NS	NS	NS	NS	1.5	NS	NS	1.5	--	5
4-Chloro-3-methylphenol	SOM02.4	59-50-7	µg/L	nc	NS	NS	2,000	600	100	NS	NS	100	--	5
4-Chloroaniline	SOM02.4	106-47-8	µg/L	c	NS	NS	NS	NS	NS	NS	NS	NS	--	10
4-Chlorophenyl-phenylether	SOM02.4	7005-72-3	µg/L	-	NS	NS	NS	NS	NS	NS	NS	NS	0.1	5
4-Methylphenol	SOM02.4	106-44-5	µg/L	nc	NS	NS	NS	1,630	272	NS	NS	272	--	10
4-Nitroaniline	SOM02.4	100-01-6	µg/L	c	NS	NS	NS	NS	NS	NS	NS	NS	--	10
4-Nitrophenol	SOM02.4	100-02-7	µg/L	c	NS	NS	NS	3,193	532	NS	NS	532	--	10
Acenaphthene	SOM02.4	83-32-9	µg/L	nc	NS	NS	90	80	23	NS	NS	23	0.1	5
Acetophenone	SOM02.4	98-86-2	µg/L	nc	NS	NS	NS	NS	NS	NS	NS	NS	--	10
Acenaphthylene	SOM02.4	208-96-8	µg/L	-	NS	NS	NS	NS	NS	NS	NS	NS	0.1	5
Aniline	--	62-53-3	µg/L	c	NS	NS	NS	NS	NS	NS	NS	NS	--	--
Anthracene	SOM02.4	120-12-7	µg/L	nc	NS	NS	400	1.8	0.3	5,569	NS	0.3	0.1	5
Atrazine	SOM02.4	1912-24-9	µg/L	c	NS	NS	NS	NS	1.8	NS	NS	1.8	--	10

Table D-4A. Screening Criteria for Surface Water and Contract Laboratory Program Reference Limits

Analyte	Analytical Method	CASRN	Units	c/nc	National Recommended Water Quality Criteria (1)			TRRP Ecological Benchmarks (RG-263)		Texas Surface Water Quality Standards (2)		Project Screening Level (3)	CRQLs (4)	
					Aquatic Life Freshwater Acute	Aquatic Life Freshwater Chronic	Human Health for Consumption Organism Only	Aquatic Life Freshwater Acute	Aquatic Life Freshwater Chronic	Human Health for Water and Fish Consumption	Human Health for Fish Only Consumption		Low Water by SIM	Low Water
Benzaldehyde	SOM02.4	100-52-7	µg/L	nc	NS	NS	NS	NS	NS	NS	NS	NS	--	10
Benzo(a)anthracene	SOM02.4	56-55-3	µg/L	c	NS	NS	0.0013	207.6	34.6	0.68	3.28	0.0013	0.1	5
Benzo(a)pyrene	SOM02.4	50-32-8	µg/L	c	NS	NS	0.00013	0.24	0.014	0.068	0.33	0.00013	0.1	5
Benzo(b)fluoranthene	SOM02.4	205-99-2	µg/L	c	NS	NS	0.0013	NS	NS	NS	NS	0.0013	0.1	5
Benzo(g,h,i)perylene	SOM02.4	191-24-2	µg/L	nc	NS	NS	NS	NS	NS	NS	NS	NS	0.1	5
Benzo(k)fluoranthene	SOM02.4	207-08-9	µg/L	c	NS	NS	0.013	NS	NS	NS	NS	0.013	0.1	5
bis(2-Chloroethoxy)methane	SOM02.4	111-91-1	µg/L	nc	NS	NS	NS	NS	NS	NS	NS	NS	--	5
bis(2-Chloroethyl)ether	SOM02.4	111-44-4	µg/L	c	NS	NS	2.2	72,000	12,000	0.57	10.06	0.57	--	10
bis(2-Ethylhexyl)phthalate	SOM02.4	117-81-7	µg/L	c	NS	NS	0.37	60	20	6	41	0.37	--	5
Butylbenzylphthalate	SOM02.4	85-68-7	µg/L	c	NS	NS	0.1	560	93	NS	NS	0.1	--	5
Caprolactam	SOM02.4	105-60-2	µg/L	nc	NS	NS	NS	NS	NS	NS	NS	NS	--	10
Carbazole	SOM02.4	86-74-8	µg/L	-	NS	NS	NS	NS	NS	NS	NS	NS	--	10
Chrysene	SOM02.4	218-01-9	µg/L	c	NS	NS	0.13	207	7	68.13	327	0.13	0.1	5
Di-n-butylphthalate	SOM02.4	84-74-2	µg/L	nc	NS	NS	30	221	7	1,318	3,010	7	--	5
Di-n-octylphthalate	SOM02.4	117-84-0	µg/L	nc	NS	NS	NS	671	22	NS	NS	22	--	10
Dibenz(a,h)anthracene	SOM02.4	53-70-3	µg/L	c	NS	NS	NS	149	5	NS	NS	5	0.1	5
Dibenzofuran	SOM02.4	132-64-9	µg/L	nc	NS	NS	NS	562	94	NS	NS	94	--	5
Diethylphthalate	SOM02.4	84-66-2	µg/L	nc	NS	NS	600	6,259	1,043	NS	NS	600	--	5
Dimethylphthalate	SOM02.4	131-11-3	µg/L	-	NS	NS	2,000	9,900	1,650	NS	NS	1650	--	5
Fluoranthene	SOM02.4	206-44-0	µg/L	nc	NS	NS	20	33.58	6.156	NS	NS	6.156	0.1	10
Fluorene	SOM02.4	86-73-7	µg/L	nc	NS	NS	70	64	11	NS	NS	11	0.1	5
Hexachlorobenzene	SOM02.4	118-74-1	µg/L	c	NS	NS	0.000079	NS	NS	0.0044	0.0045	0.000079	--	5
Hexachlorobutadiene	SOM02.4	87-68-3	µg/L	c	NS	NS	0.01	131	4.36	6.5	274	0.01	--	5
Hexachlorocyclopentadiene	SOM02.4	77-47-4	µg/L	nc	NS	NS	4	2.1	0.7	50	NS	0.7	--	10
Hexachloroethane	SOM02.4	67-72-1	µg/L	c	NS	NS	0.1	210	12	4.97	11.51	0.1	--	5
Indeno(1,2,3-cd)pyrene	SOM02.4	193-39-5	µg/L	c	NS	NS	0.0013	NS	NS	NS	NS	0.0013	0.1	5
Isophorone	SOM02.4	78-59-1	µg/L	c	NS	NS	1,800	36,000	6,000	NS	NS	1800	--	5
N-Nitrosodimethylamine	SOM02.4	62-75-9	µg/L	c	NS	NS	3	282,000	47,000	NS	NS	3	--	5
N-Nitroso-di-n-propylamine	--	621-64-7	µg/L	c	NS	NS	0.51	600	20	NS	NS	0.51	--	--
N-Nitrosodiphenylamine	SOM02.4	86-30-6	µg/L	c	NS	NS	6	1,740	290	NS	NS	6	--	5
Naphthalene	SOM02.4	91-20-3	µg/L	c	NS	NS	NS	1,480	250	NS	NS	250	--	5
Nitrobenzene	SOM02.4	98-95-3	µg/L	c	NS	NS	600	3,300	1,100	45	1853	45	0.1	5
Pentachlorophenol	SOM02.4	87-86-5	µg/L	c	NS	NS	0.04	3.19	2.45	0.8	9.1	0.04	0.2	10
Phenanthrene	SOM02.4	85-01-8	µg/L	nc	NS	NS	NS	30	30	NS	NS	30	0.1	5
Phenol	SOM02.4	108-95-2	µg/L	nc	NS	NS	300,000	3,600	110	NS	NS	110	--	10
Pyrene	SOM02.4	129-00-0	µg/L	nc	NS	NS	30	206	7	NS	NS	7	0.1	5

Table D-4A. Screening Criteria for Surface Water and Contract Laboratory Program Reference Limits

Analyte	Analytical Method	CASRN	Units	c/nc	National Recommended Water Quality Criteria (1)			TRRP Ecological Benchmarks (RG-263)		Texas Surface Water Quality Standards (2)		Project Screening Level (3)	CRQLs (4)	
					Aquatic Life Freshwater Acute	Aquatic Life Freshwater Chronic	Human Health for Consumption Organism Only	Aquatic Life Freshwater Acute	Aquatic Life Freshwater Chronic	Human Health for Water and Fish Consumption	Human Health for Fish Only Consumption		Low Water by SIM	Low Water
Polycyclic Aromatic Hydrocarbons														
Acenaphthene	SOM02.4	83-32-9	µg/L	nc	NS	NS	90	80	23	NS	NS	23	0.1	5
Acenaphthylene	SOM02.4	208-96-8	µg/L	-	NS	NS	NS	NS	NS	NS	NS	NS	0.1	5
Anthracene	SOM02.4	120-12-7	µg/L	nc	NS	NS	400	1.8	0.3	5569	NS	0.3	0.1	5
Benzo(a)anthracene	SOM02.4	56-55-3	µg/L	c	NS	NS	0.0013	207.6	34.6	0.68	3.28	0.0013	0.1	5
Benzo(a)pyrene	SOM02.4	50-32-8	µg/L	c	NS	NS	0.00013	0.24	0.014	0.068	0.33	0.00013	0.1	5
Benzo(b)fluoranthene	SOM02.4	205-99-2	µg/L	c	NS	NS	0.0013	NS	NS	NS	NS	0.0013	0.1	5
Benzo(g,h,i)perylene	SOM02.4	191-24-2	µg/L	nc	NS	NS	NS	NS	NS	NS	NS	NS	0.1	5
Benzo(k)fluoranthene	SOM02.4	207-08-9	µg/L	c	NS	NS	0.013	NS	NS	NS	NS	0.013	0.1	5
Chrysene	SOM02.4	218-01-9	µg/L	c	NS	NS	0.13	207	7	68.13	327	0.13	0.1	5
Dibenz(a,h)anthracene	SOM02.4	53-70-3	µg/L	c	NS	NS	0.00013	149	5	NS	NS	0.00013	0.1	5
Fluoranthene	SOM02.4	206-44-0	µg/L	nc	NS	NS	20	33.58	6.156	NS	NS	6.156	0.1	10
Fluorene	SOM02.4	86-73-7	µg/L	nc	NS	NS	70	64	11	NS	NS	11	0.1	5
Indeno(1,2,3-cd)pyrene	SOM02.4	193-39-5	µg/L	c	NS	NS	0.0013	NS	NS	NS	NS	0.0013	0.1	5
Naphthalene	SOM02.4	91-20-3	µg/L	c	NS	NS	NS	1,480	250	NS	NS	250	0.1	5
Phenanthrene	SOM02.4	85-01-8	µg/L	nc	NS	NS	NS	30	30	NS	NS	30	0.1	5
Pyrene	SOM02.4	129-00-0	µg/L	nc	NS	NS	30	206	7	NS	NS	7	0.1	5
1-Methylnaphthalene	--	90-12-0	µg/L	c	NS	NS	NS	37	2.1	NS	NS	2.1	--	--
2-Methylnaphthalene	SOM02.4	91-57-6	µg/L	nc	NS	NS	NS	380	63	NS	NS	63	0.1	5
Polychlorinated Biphenyls														
PCB-1016	SOM02.4	12674-11-2	µg/L	c	NS	NS	NS	NS	NS	NS	NS	NS	--	1
PCB-1221	SOM02.4	11104-28-2	µg/L	c	NS	NS	NS	NS	NS	NS	NS	NS	--	1
PCB-1232	SOM02.4	11141-16-5	µg/L	c	NS	NS	NS	NS	NS	NS	NS	NS	--	1
PCB-1242	SOM02.4	53469-21-9	µg/L	c	NS	NS	NS	NS	NS	NS	NS	NS	--	1
PCB-1248	SOM02.4	12672-29-6	µg/L	c	NS	NS	NS	NS	NS	NS	NS	NS	--	1
PCB-1254	SOM02.4	11097-69-1	µg/L	c	NS	NS	NS	NS	NS	NS	NS	NS	--	1
PCB-1260	SOM02.4	11096-82-5	µg/L	c	NS	NS	NS	NS	NS	NS	NS	NS	--	1
PCB-1262	SOM02.4	37324-23-5	µg/L	-	NS	NS	NS	NS	NS	NS	NS	NS	--	1
PCB-1268	SOM02.4	11100-14-4	µg/L	-	NS	NS	NS	NS	NS	NS	NS	NS	--	1
Total PCBs	--	1336-36-3	µg/L	c	NS	NS	0.000064	2	0.014	0.00064	0.00064	0.000064	--	--
ICP-MS Metals														
Aluminum	ISM02.4	7429-90-5	µg/L	nc	750	87	NS	991	87	NS	NS	87	--	20
Antimony	ISM02.4	7440-36-0	µg/L	nc	NS	NS	640	6,600	2,200	6	1071	6	--	2
Arsenic	ISM02.4	7440-38-2	µg/L	c	340	150	0.14	340	150	10	NS	0.14	--	1
Barium	ISM02.4	7440-39-3	µg/L	nc	NS	NS	NS	96,000	16,000	2000	NS	2000	--	10
Beryllium	ISM02.4	7440-41-7	µg/L	nc	NS	NS	NS	130	5.3	NS	NS	5.3	--	1
Cadmium	ISM02.4	7440-43-9	µg/L	nc	1.8	0.72	NS	4.37	0.15	5	NS	0.15	--	1

Table D-4A. Screening Criteria for Surface Water and Contract Laboratory Program Reference Limits

Analyte	Analytical Method	CASRN	Units	c/nc	National Recommended Water Quality Criteria (1)			TRRP Ecological Benchmarks (RG-263)		Texas Surface Water Quality Standards (2)		Project Screening Level (3)	CRQLs (4)	
					Aquatic Life Freshwater Acute	Aquatic Life Freshwater Chronic	Human Health for Consumption Organism Only	Aquatic Life Freshwater Acute	Aquatic Life Freshwater Chronic	Human Health for Water and Fish Consumption	Human Health for Fish Only Consumption		Low Water by SIM	Low Water
Calcium	ISM02.4	7440-70-2	µg/L	-	NS	NS	NS	NS	NS	NS	NS	NS	--	500
Chromium	ISM02.4	7440-47-3	µg/L	nc	570	74	NS	323	42	NS	NS	42	--	2
Cobalt	ISM02.4	7440-48-4	µg/L	nc	NS	NS	NS	45,000	1,500	NS	NS	1500	--	1
Copper	ISM02.4	7440-50-8	µg/L	nc	NS	NS	NS	7	5	NS	NS	5.24	--	2
Iron	ISM02.4	7439-89-6	µg/L	nc	NS	1,000	NS	NS	1,000	NS	NS	1000	--	200
Lead	ISM02.4	7439-92-1	µg/L	-	65	2.5	NS	30	1	1.15	3.83	1.15	--	1
Magnesium	ISM02.4	7439-95-4	µg/L	-	NS	NS	NS	19,400	3,235	NS	NS	3235	--	500
Manganese	ISM02.4	7439-96-5	µg/L	nc	NS	NS	100	2,370	1,310	NS	NS	100	--	1
Nickel	ISM02.4	7440-02-0	µg/L	nc	470	52	4600	260	28.93	332	1,140	28.93	--	1
Potassium	ISM02.4	7440-09-7	µg/L	-	NS	NS	NS	NS	NS	NS	NS	NS	--	500
Selenium	ISM02.4	7782-49-2	µg/L	nc	NS	NS	4200	20	5	50	NS	5	--	5
Silver	ISM02.4	7440-22-4	µg/L	nc	3.2	NS	NS	1	0.1	NS	NS	0.1	--	1
Sodium	ISM02.4	7440-23-5	µg/L	-	NS	NS	NS	NS	NS	NS	NS	NS	--	500
Thallium	ISM02.4	7440-28-0	µg/L	nc	NS	NS	0.47	540	180	0.12	0.23	0.12	--	1
Vanadium	ISM02.4	7440-62-2	µg/L	nc	NS	NS	NS	284	20	NS	NS	20	--	5
Zinc	ISM02.4	7440-66-6	µg/L	nc	120	120	26000	65.1	65.7	NS	NS	65.1	--	2
ICP-AES Metals														
Aluminum	ISM02.4	7429-90-5	µg/L	nc	750	87	NS	991	87	NS	NS	87	--	200
Antimony	ISM02.4	7440-36-0	µg/L	nc	NS	NS	640	6,600	2,200	6	1071	6	--	60
Arsenic	ISM02.4	7440-38-2	µg/L	c	340	150	0.14	340	150	10	NS	0.14	--	10
Barium	ISM02.4	7440-39-3	µg/L	nc	NS	NS	NS	96,000	16,000	2000	NS	2000	--	200
Beryllium	ISM02.4	7440-41-7	µg/L	nc	NS	NS	NS	130	5	NS	NS	5.3	--	5
Boron	ISM02.4	7440-42-8	µg/L	nc	NS	NS	NS	20,200	1,100	NS	NS	1100	--	NS
Cadmium	ISM02.4	7440-43-9	µg/L	nc	1.8	0.72	NS	4.37	0.15	5	NS	0.15	--	5
Calcium	ISM02.4	7440-70-2	µg/L	-	NS	NS	NS	NS	NS	NS	NS	NS	--	5,000
Chromium	ISM02.4	7440-47-3	µg/L	nc	570	74	NS	323	42	NS	NS	42	--	10
Cobalt	ISM02.4	7440-48-4	µg/L	nc	NS	NS	NS	45,000	1,500	NS	NS	1500	--	50
Copper	ISM02.4	7440-50-8	µg/L	nc	NS	NS	NS	7	5	NS	NS	5.24	--	25
Iron	ISM02.4	7439-89-6	µg/L	nc	NS	1,000	NS	NS	1,000	NS	NS	1000	--	100
Lead	ISM02.4	7439-92-1	µg/L	-	65	2.5	NS	30	1	1.15	3.83	1.15	--	10
Magnesium	ISM02.4	7439-95-4	µg/L	-	NS	NS	NS	19,400	3,235	NS	NS	3235	--	5,000
Manganese	ISM02.4	7439-96-5	µg/L	nc	NS	NS	100	2,370	1,310	NS	NS	100	--	15
Nickel	ISM02.4	7440-02-0	µg/L	nc	470	52	4600	260	29	332	1,140	28.93	--	40
Potassium	ISM02.4	7440-09-7	µg/L	-	NS	NS	NS	NS	NS	NS	NS	NS	--	5,000
Selenium	ISM02.4	7782-49-2	µg/L	nc	NS	NS	4200	20	5	50	NS	5	--	35
Silicon	ISM02.4	7440-21-3	µg/L	-	NS	NS	NS	NS	NS	NS	NS	NS	--	NS
Silver	ISM02.4	7440-22-4	µg/L	nc	3.2	NS	NS	0.8	0.08	NS	NS	0.08	--	10

Table D-4A. Screening Criteria for Surface Water and Contract Laboratory Program Reference Limits

Analyte	Analytical Method	CASRN	Units	c/nc	National Recommended Water Quality Criteria (1)			TRRP Ecological Benchmarks (RG-263)		Texas Surface Water Quality Standards (2)		Project Screening Level (3)	CRQLs (4)	
					Aquatic Life Freshwater Acute	Aquatic Life Freshwater Chronic	Human Health for Consumption Organism Only	Aquatic Life Freshwater Acute	Aquatic Life Freshwater Chronic	Human Health for Water and Fish Consumption	Human Health for Fish Only Consumption		Low Water by SIM	Low Water
Sodium	ISM02.4	7440-23-5	µg/L	-	NS	NS	NS	NS	NS	NS	NS	NS	--	5,000
Thallium	ISM02.4	7440-28-0	µg/L	nc	NS	NS	0.47	540	180	0.12	0.23	0.12	--	25
Vanadium	ISM02.4	7440-62-2	µg/L	nc	NS	NS	NS	284	20	NS	NS	20	--	50
Zinc	ISM02.4	7440-66-6	µg/L	nc	120	120	26000	65.1	65.7	NS	NS	65.1	--	60
Miscellaneous														
Mercury (Total)	ISM02.4	7439-97-6	µg/L	nc	1.4	0.77	NS	2.4	1.3	0.0122	0.0122	0.0122	--	0.2

NOTES:

1. EPA National Recommended Water Quality Criteria (accessed October 2018 at http://water.epa.gov/scitech/swguidance/standards/criteria/current/index.cfm).
2. Texas Commission on Environmental Quality (TCEQ) Texas Surface Water Quality Standards (TCEQ 2018); at https://www.tceq.texas.gov/assets/public/waterquality/standards/tswqs2018/2018swqs_allsections_nopreamble.pdf
3. Project screening levels reflect the lowest value for EPA or TCEQ surface water quality criteria.
4. Contract-required Quantitation Limits (CRQL) for EPA Contract Laboratory Program (CLP)
5. National Recommended Water Quality criteria for aluminum is for a pH range of 6.5-9.0.
6. Cadmium fresh water values are hardness dependent and were calculated assuming a hardness of 100 mg/L as $CaCO_3$.
7. Pentachlorophenol Texas Surface Water Quality Standards are a function of pH and were calculated assuming a pH of 7.8.
8. Texas Surface Water Quality Standards aquatic life protection values for cadmium, copper, chromium, lead, nickel, and zinc are hardness dependent and were calculated assuming a hardness of 100 mg/L as $CaCO_3$.

Project screening levels are either below the CRQL or not a reported analyte for the prescribed analytical method.

µg/L = Microgram(s) per liter
AES = Atomic emission spectroscopy
c = Carcinogenic; nc = Non-carcinogenic
CASRN = Chemical Abstracts Service Registry Number
ICP = Inductively-coupled plasma
mg/L = Milligram(s) per liter
MS = Mass spectrometry
-- = Not provided
NS = Not specified
PCB = Polychlorinated biphenyl
SIM = Selective ion monitoring
TRRP = Texas Risk Reduction Program

Table D-4B. Screening Criteria for Surface Water and Private Laboratory Reference Limits

Analyte	Analytical Method	CASRN	Units	c/nc	National Recommended Water Quality Criteria (1)			TRRP Ecological Benchmarks (RG-263)		Texas Surface Water Quality Standards (2)		Project Screening Level (3)	Achievable Laboratory Limits (4)	
					Aquatic Life Freshwater Acute	Aquatic Life Freshwater Chronic	Human Health for Consumption Organism Only	Aquatic Life Freshwater Acute	Aquatic Life Freshwater Chronic	Human Health for Water and Fish Consumption	Human Health for Fish Only Consumption		RL	DL
Total Petroleum Hydrocarbons														
TPH as Gasoline Range Organics (C_6 to C12)	TX1005	NS	µg/L	-	NS	NS	NS	NS	NS	NS	NS	NS	2.00	0.580
TPH as Diesel Range Organics (C12 to C_{28})	TX1005	NS	µg/L	-	NS	NS	NS	NS	NS	NS	NS	NS	2.00	0.680
TPH as Oil Range Organics (C_{28} to C_{35})	TX1005	NS	µg/L	-	NS	NS	NS	NS	NS	NS	NS	NS	2.00	0.680
Miscellaneous														
Cyanide - Total	SW9012B	57-12-5	µg/L	nc	22	5.2	400	45.8	10.7	200	NS	5.2	0.01	0.005
Hexavalent Chromium	EPA Method 218.6	18540-29-9	µg/L	c	16	11	NS	15.7	10.6	62	502	10.6	0.001	0.00015
Alkalinity -Bicarbonate/Carbonate	SM 2320B	NS	mg/L	-	NS	NS	NS	NS	NS	NS	NS	NS	5	1.7
pH	SW9040C	NS	S.U.	-	NS	NS	NS	NS	NS	NS	NS	NS	0.01	0.01
Total Dissolved Solids	SM 2540C	NS	mg/L	-	NS	NS	NS	NS	NS	NS	NS	NS	60.0	20.0
Total Organic Carbon	SM 5310C	NS	mg/L	-	NS	NS	NS	NS	NS	NS	NS	NS	1	0.5
Total Suspended Solids	SM 2540D	NS	mg/L	-	NS	NS	NS	NS	NS	NS	NS	NS	3	1
Hardness	EPA Method 130.2	NS	mg/L	-	NS	NS	NS	NS	NS	NS	NS	NS	10	3
Perfluorooctanoic sulfonic acid (1-Octanesulfonic acid, heptadecafluoro-1-)	EPA Method 537	1763-23-1	µg/L	-	NS	NS	NS	21	5.1	NS	NS	5.1	0.002	0.0004
Perfluoroundecanoic acid (Undecanoic acid, uncosafluoro-)	EPA Method 537	2058-94-8	µg/L	-	NS	NS	NS	NS	NS	NS	NS	NS	0.002	0.0004
Perfluoropentanoic acid (Pentanoic acid, nonafluoro-)	EPA Method 537	2706-90-3	µg/L	-	NS	NS	NS	NS	NS	NS	NS	NS	0.006	0.002
Perfluorohexanoic acid (Hexanoic acid, undecafluoro-)	EPA Method 537	307-24-4	µg/L	-	NS	NS	NS	NS	NS	NS	NS	NS	0.002	0.0004
Perfluorododecanoic acid (Dodecanoic acid, tricosafluoro-)	EPA Method 537	307-55-1	µg/L	-	NS	NS	NS	NS	NS	NS	NS	NS	0.001	0.0003
Perfluorooctanoic acid (Octanoic acid, pentadecafluoro-)	EPA Method 537	335-67-1	µg/L	-	NS	NS	NS	NS	NS	NS	NS	NS	0.001	0.0003
Perfluorodecanoic acid (Decanoic acid, nonadecafluoro-)	EPA Method 537	335-76-2	µg/L	-	NS	NS	NS	NS	NS	NS	NS	NS	0.002	0.001
Perfluorodecane sulfonic acid (1-Decanesulfonic acid, heneicosafluoro-)	EPA Method 537	335-77-3	µg/L	-	NS	NS	NS	NS	NS	NS	NS	NS	---	---
Perfluorohexane sulfonic acid (1-Hexanesulfonic acid, triddecafluoro-)	EPA Method 537	355-46-4	µg/L	-	NS	NS	NS	NS	NS	NS	NS	NS	0.002	0.0004
Perfluorobutyric acid (Butanoic acid, heptafluoro-)	EPA Method 537	375-22-4	µg/L	-	NS	NS	NS	NS	NS	NS	NS	NS	0.006	0.002
Perfluorobutane sulfonic acid (1-Butanesulfonic acid, nonafluoro-)	EPA Method 537	375-73-5	µg/L	-	NS	NS	NS	NS	NS	NS	NS	NS	0.006	0.002
Perfluoroheptanoic acid (Heptanoic acid, tridecafluoro-)	EPA Method 537	375-85-9	µg/L	-	NS	NS	NS	NS	NS	NS	NS	NS	0.001	0.0003
Perfluorononanoic acid (Nonanoic acid, heptadecafluoro-)	EPA Method 537	375-95-1	µg/L	-	NS	NS	NS	NS	NS	NS	NS	NS	0.002	0.0004
Perfluorotetradecanoic acid (Tetradecanoic acid, heptacosafluoro-)	EPA Method 537	376-06-7	µg/L	-	NS	NS	NS	NS	NS	NS	NS	NS	0.001	0.0003

Table D-4B. Screening Criteria for Surface Water and Private Laboratory Reference Limits

Analyte	Analytical Method	CASRN	Units	c/nc	National Recommended Water Quality Criteria (1)			TRRP Ecological Benchmarks (RG-263)		Texas Surface Water Quality Standards (2)		Project Screening Level (3)	Achievable Laboratory Limits (4)	
					Aquatic Life Freshwater Acute	Aquatic Life Freshwater Chronic	Human Health for Consumption Organism Only	Aquatic Life Freshwater Acute	Aquatic Life Freshwater Chronic	Human Health for Water and Fish Consumption	Human Health for Fish Only Consumption		RL	DL
Perfluorotridecanoic acid (Tridecanoic acid, pentacosafluoro-)	EPA Method 537	72629-94-8	µg/L	-	NS	NS	NS	NS	NS	NS	NS	NS	0.001	0.0003
Perfluorooctane sulfonamide (1-Octanesulfonamide, hetpadecafluoro-)	EPA Method 537	754-91-6	µg/L	-	NS	NS	NS	NS	NS	NS	NS	NS	0.003	0.001

NOTES:
1. EPA National Recommended Water Quality Criteria (accessed October 2018 at http://water.epa.gov/scitech/swguidance/standards/criteria/current/index.cfm).
2. Texas Commission on Environmental Quality (TCEQ) Texas Surface Water Quality Standards (TCEQ 2018); at https://www.tceq.texas.gov/assets/public/waterquality/standards/tswqs2018/2018swqs_allsections_nopreamble.pdf
3. Project screening levels reflect the lowest value for EPA or TCEQ surface water quality criteria.
4. Achievable laboratory limits are for Eurofins Lancaster Laboratories Environmental, LLC.

µg/L = Microgram(s) per liter
AES = Atomic emission spectroscopy
c = Carcinogenic; nc = Non-carcinogenic
DL = Detection Limit
CASRN = Chemical Abstracts Service Registry Number
ICP = Inductively-coupled plasma
mg/L = Milligram(s) per liter
MS = Mass spectrometry
-- = Not provided
NS = Not specified
RL = Reporting Limit
SIM = Selective ion monitoring
TRRP = Texas Risk Reduction Program

Appendix E

Field Forms

RECORD OF SUBSURFACE EXPLORATION

EA Engineering, Science,
and Technology, Inc.
405 S. Highway 121
Building C, Suite 100
Lewisville, Texas 75067

Well/Boring #:	Date Drilled:
Depth of Boring:	Diameter of Boring:
Length of Casing:	Diameter of Casing:
Length of Screen:	Slot Size:
Screen Material:	Filter Pack:

Project:

Logged By:

Drilling Co.:

Driller:

Drilling Method:

Concrete, Clay, Limestone, Bentonite, Silt, Shale, Filter Pack, Sand, Sandstone, Well Screen, Gravel, Peat/Coal

Depth (Feet)	▼ Water Level	GEOLOGIC DESCRIPTION	USCS LOG	Well Completion and Lithology	OVM ppm	LEL (%)	BLOW COUNTS
0							
1							
2							
3							
4							
5							
6							
7							
8							
9							
10							
11							
12							
13							
14							
15							
16							
17							
18							
19							
20							
21							
22							
23							
24							
25							
26							
27							
28							
29							
30							

RECORD OF SUBSURFACE EXPLORATION

EA Engineering, Science,
and Technology, Inc.
405 S. Highway 121
Building C, Suite 100
Lewisville, Texas 75067

Well/Boring #:	Date Drilled:
Depth of Boring:	Diameter of Boring:
Length of Casing:	Diameter of Casing:
Length of Screen:	Slot Size:
Screen Material:	Filter Pack:

Project:

Logged By:

Drilling Co.:

Driller:

Drilling Method:

Concrete, Clay, Limestone, Bentonite, Silt, Shale, Filter Pack, Sand, Sandstone, Well Screen, Gravel, Peat/Coal

Depth (Feet)	▼ Water Level	GEOLOGIC DESCRIPTION	USCS LOG	Well Completion and Lithology	OVM ppm	LEL (%)	BLOW COUNTS
30							
31							
32							
33							
34							
35							
36							
37							
38							
39							
40							
41							
42							
43							
44							
45							
46							
47							
48							
49							
50							
51							
52							
53							
54							
55							
56							
57							
58							
59							
60							

Soil Collection Field Form

Exposure Area:_____ **Weather:**_____

Sampling Location:_____ **GPS Coordinates: Lat:**_____

Sample ID:_____ **Long:**_____

Sampling Personnel: _____ **Sample Date/Time:**_____

Depth (bgs): **Description** (soil type, color, density/consistency, plasticity, moisture, grain size, angularity/mineralogy, other):

XRF Data:

Interval:			
_____	_____	_____	_____
_____	_____	_____	_____
_____	_____	_____	_____
_____	_____	_____	_____

Location Map:

Sampling Method: (circle)
- Geoprobe
- Slide Hammer Probe
- Scoop
- Ponar
- Core Sampler
- Other

Analyses:
(circle and indicate number of containers)

Cyanide	PFCs
Geotehcnical Parameters	pH
Hexavalent Chromium	SVOCS
Metals (Total)	TPH
ORP	VOCs
PCBs	

Notes/Comments:

Recorded By:_____

EA Engineering,
Science and Technology

FIELD RECORD OF WELL DEVELOPMENT

Project Name:	Project No:	Date:
EA Personnel:	Development Method:	
Weather/Temperature/Barometric Pressure:		Time:

Well No.:	Well Condition:
Well Diameter:	Measurement Reference:
Well Volume Calculations	
A. Depth To Water (ft):	D. Well Volume/ft:
B. Total Well Depth (ft):	E. Total Well Volume (gal)[C*D]:
C. Water Column Height (ft):	F. Five Well Volumes (gal):

Parameter	Beginning	1 Volume	2 Volumes	3 Volumes	4 Volumes	5 Volumes
Time (min)						
Depth to Water (ft)						
Purge Rate (gpm)						
Volume Purged (gal)						
pH						
Temperature (°F)						
Conductivity (µmhos/cm)						
Dissolved Oxygen						
Turbidity (NTU)						
ORP (mV)						

Parameter	6 Volumes	7 Volumes	8 Volumes	9 Volumes	10 Volumes	End
Time (min)						
Depth to Water (ft)						
Purge Rate (gpm)						
Volume Purged (gal)						
pH						
Temperature (°F)						
Conductivity (µmhos/cm)						
Dissolved Oxygen						
Turbidity (NTU)						
ORP (mV)						

NOTE: NTU = Nephelometric turbidity unit.
ORP = Oxidation-reduction potential.

COMMENTS AND OBSERVATIONS: _____

EA Engineering,
Science and Technology

FIELD RECORD OF WELL DEVELOPMENT

Project Name:	Project No:	Date:
EA Personnel:	Development Method:	
Weather/Temperature/Barometric Pressure:		Time:

Well No.:	Well Condition:
Well Diameter:	Measurement Reference:

Parameter	Beginning	1 Volume	2 Volumes	3 Volumes	4 Volumes	5 Volumes
Time (min)						
Depth to Water (ft)						
Purge Rate (gpm)						
Volume Purged (gal)						
pH						
Temperature (°F)						
Conductivity (µmhos/cm)						
Dissolved Oxygen						
Turbidity (NTU)						
ORP (mV)						

Parameter	6 Volumes	7 Volumes	8 Volumes	9 Volumes	10 Volumes	End
Time (min)						
Depth to Water (ft)						
Purge Rate (gpm)						
Volume Purged (gal)						
pH						
Temperature (°F)						
Conductivity (µmhos/cm)						
Dissolved Oxygen						
Turbidity (NTU)						
ORP (mV)						

Lane Plating Works, Inc. Superfund Site
Dallas, Dallas County, Texas

Page: _____ of _____
Date: _____

Ground Water Collection Field Form

Well ID: _____ **Sample ID:** _____ **Sample Time:** _____

Casing diameter/type: Well location: Weather:

Screened interval(s): Sampling personnel:

Total depth: Sampling method:

Initial depth to water (w/o pump): Water level indicator:

Final depth to water (w/o pump): Water quality meter: YSI

Measuring point: **North side of casing** Pump depth setting: Pump type/model:

	Δ < 1° C	Δ < 3%	Δ <10%	Δ <10%	Δ < 0.1 pH	Δ < 10 mV	Δ < 0.3 ft	< 1L/min	Δ < 10 NTU		Parameter Stabilization Limits (3 consecutive readings)
Time	**Temp (°C)**	**Conductivity (mS/cm) or (µS/cm)**	**DO (%)**	**DO (mg/L)**	**pH**	**ORP (mV)**	**Water Level (feet btoc)**	**Flow Rate (L/min) or (mL/min)**	**Turbidity (NTU)**	**Purge Volume (L) or (mL)**	**Additional Comments**

Note:
Parameter Stabilization Limits:
(3 consecutive readings) for percent difference type parameters
Percent difference formula =
ABS[((first reading - second reading)/first reading) x 100]
Ex: Readings 12, 16, 15, 13
((12-16)/12)*100 = 33% ((16-15)/16)*100 = 6%
((15-13)/15)*100 = 13% In example, stabilization has not occurred.

Analyses: (circle those collected and indicate the number of containers)

Cyanide	PCBs	TPH
Hexavalent Chromium	PFCs	VOCs
Metals (Dissolved)	SVOCS	
Metals (Total)	TDS	

Recorded By:_____

Sediment and Surface Water Collection Field Form

Exposure Area:_____

Sample Date:_____

GPS Coordinates:

Weather Conditions:_____

Lat:_____

Surface Water ID:_____

Long:_____

Collection Time:_____

Sediment ID:_____

Sampling Personnel: _____

Collection Time:_____

Sediment Description (soil type, color, density/consistency, plasticity, moisture, grain size, angularity/mineralogy, other):

Surface Water Parameters:

Temperature: _____°C **pH:** _____ **Conductivity:** _____ ms/cm **TDS:** _____ ppm **ORP:** _____mv **Turbidity:** _____ntu

Location Map:

Depth (bgs):

Sampling Method:	**Analyses:**	
Geoprobe	AVS/SEM	PFCs
Slide Hammer Probe	Cyanide	pH
Scoop	Hardness	SVOCS
Ponar	Hexavalent Chromium	TDS
Core Sampler	Metals (Dissolved)	TOC
	Metals (Total)	TPH
Pump	ORP	TSS
Dipper	PCBs	VOCs

Notes/Comments:

Recorded By:_____

Fish Collection Form for Composite Sampling

Location (Exposure Area):

Additional Notes Regarding Location of Fish Collection:

Weather:

Sampling Personnel:

Date	Time	SAMPLE ID	Higher vs. Lower Trophic	Composite vs. Individual	Name	Total Length (mm)	Whole Weight (g)	Comments*

*Note in the comments section information on fish health, appearance, any evidence of parasites, etc.

Recorded By:_____

FIELD SAMPLING FORM FOR VI ASSESSMENT

Samplers:	Site ID / Bldg ID	**EA Project #:** 14342168 **Client:** EPA Region 6 **Site:** Lane Plating Works Superfund Site **Description:** Vapor Intrusion Assessment Sampling

Location ID: _____

Probe Installation Date/Time: _____

Slab Thickness:_____Probe Length: _____

Helium Leak Check Date/Time: _____

He% Shroud_____ He% Tedlar Bag_____ VOC Purge _____

Shut in Check PSI drop in 1 minute: _____

Sample Type /Analysis: ☐ Indoor Air / TO-15 SIM
☐ Sub-Slab / TO-15 SIM
☐ Outdoor Air /TO-15 SIM

Duplicate: ☐ Yes ☐ No

Pressure recorded in Inches of Hg

Summa Sample ID: _____

Summa Canister ID: _____

Initial Gauge Pressure:_____ Initial Reg. Pressure: _____

Flow Control ID: _____

Flow Control Rate: _____

Canister Start Date/Time: _____

Canister End Date/Time: _____

Final Canister Gauge Pressure: _____

Duplicate

Summa Sample ID:_____

Summa Canister ID:_____

Initial Gauge Pressure:____ Initial Reg. Pressure:_____

Flow Control ID:_____

Flow Control Rate:_____

Canister Start Date/Time:_____

Canister End Date/Time:_____

Final Canister Gauge Pressure:_____

Comments/Observations:

_____

_____

_____

_____

_____

Appendix F

Soil Gas and Indoor Air Sampling Procedures

VAPOR INTRUSION SAMPLING PROCEDURES

INTRODUCTION

An inspection of general site conditions will be performed at each property location as part of the air sampling. The inspection will include the following activities:

- Completion of an Indoor Air Quality Questionnaire and Building Inventory (attached).
- Documentation of outdoor weather conditions and indoor temperature.
- Selection of air sampling locations.

1. FIELD ACTIVITIES

The semi-permanent, sub-slab soil gas monitoring points will be installed prior to the collection of indoor and outdoor air samples so that sampling activities can occur within the same timeframe as close to simultaneously as possible. Depending on the type of media used to seal the monitoring point, each semi-permanent sub-slab soil gas monitoring point will be allowed to set up for at least 12 hours prior to purging and leak check testing. Once the purging and leak check tests have been performed, indoor air and outdoor ambient air samples will be set up for sample collection. The indoor and outdoor air samples will be collected concurrently over the same time period as the sub-slab samples. Subsequent rounds of sampling will follow the same protocol as implemented during the first round, so that analytical data results from both sampling events will be comparable.

During field activities, field data sheets will be used to record details of the sub-slab soil gas, indoor air, and outdoor ambient air sampling activities, which will include the following information, at a minimum and as applicable:

- Source area identification and building identification
- Sample identification
- Sampling location
- Sub-slab monitoring point installation date and time
- Summa canister and associated flow-control device serial number identification
- Flow-control device sample flow rate (set by laboratory)
- Initial Summa canister pressure using hand-held vacuum gauge
- Summa canister sample duration
- Helium concentration in shroud during leak check testing
- Photoionization detector (PID) reading from sub-slab monitoring point purge
- Significant comments and notes during installation or sample collection activities.

At each location, air samples will be collected for laboratory analysis utilizing the appropriate U.S. Environmental Protection Agency method. Air samples will be collected from two locations per structure, including the first floor and the sub-slab environment. If a basement is present, air samples will be collected from three locations per structure, including the first

ED_004144A_00000101-00970

floor, basement, and sub-slab environment. An active approach, utilizing laboratory batch-certified Summa canisters regulated for 24-hour sample collection, will be used based on building use and/or project requirements to evaluate the indoor air and sub-slab soil vapor conditions.

2. SUMMA CANISTERS

Six-liter (L) Summa canisters will be used for the collection of air samples. The rationale for this recommendation includes the following:

- The analysis of VOCs by TO-15, TO-15 selective ion monitoring (SIM), and/or fixed gases by ASTM D-1946 using a smaller volume (1-L) Summa canister requires that the entire sample volume be used for analysis. Therefore, additional sample volume is not available for confirmation analysis should additional quantification be required.
- The dilution factor is lower for 6-L Summa canisters because they are pressurized to 5 pounds per square inch (psi) to retrieve the analytical aliquot, resulting in an expected dilution factor of 1.61 (compared to an expected dilution factor of 2.42 for 1-L Summa canisters, which are pressurized to 15 psi).

The Summa canisters will be paired with flow regulators that will be used at only one location, and then set aside for return to the laboratory for decontamination. The flow regulator, which features a particulate filter and vacuum gauge, will be set to a specified flow rate by the analytical laboratory prior to shipping. The Summa canisters used during this project will be individually certified by the analytical laboratory, and set at a vacuum pressure of approximately negative 30 inches of mercury (in. Hg). Immediately prior to sample collection, the vacuum for each Summa canister will be verified with a handheld pressure gauge to assess for tightness during transit from the laboratory to the field. Before removing the compression plug on the canister during the pressure check, confirm the canister valve is closed and did not come open during shipping. Pressure readings will be recorded on the field data forms and tags. Any Summa canister with a pressure reading less than -25 in. Hg will not be used.

SUB-SLAB SAMPLING PROCEDURES

3. SUB-SLAB MONITOR POINT INSTALLATION

The procedures for the selection and installation of sub-slab soil gas sampling points within buildings are based on applicable guidance. The procedures are intended to provide the specific process used to select and install sample sub-slab soil gas monitoring probes. However, the procedures are also intended to be flexible enough to implement within a variety of buildings and using different materials, based on local availability. The procedures presented below will be followed for the selection and installation of each sub-slab soil gas monitoring point within the buildings to be sampled during the field investigation:

1. Features that tend to be preferential migration pathways for vapors (utility banks, piping corridors, etc.) will be identified and samples will be taken in the vicinity of, but no closer than 6 feet (ft) from, these features, if present. A visual assessment of the condition of the floor will also be completed. If a utility clearance determines that

ED_004144A_00000101-00971

the sub-slab soil gas monitoring points cannot occur at the proposed location, then location will be adjusted to the closest practicable point. Sub-slab soil gas sampling locations will be selected to be out of the line of traffic and will be placed a minimum of 6 ft from an exterior wall and/or major cracks in the concrete slab.

2. Once the sampling points are located, semi-permanent sub-slab soil gas monitoring point will be installed to allow for multiple sampling events from identical sub-slab locations. The semi-permanent sub-slab soil gas monitoring point will be installed by drilling a 1-in.-diameter hole into the concrete slab to an approximate depth of 1½ to 2 in. using a hand-held electric hammer drill or equivalent to create an annular space for the semi-permanent point. A ¼-in.-diameter drill bit will then be used in the center of the 1-in.-diameter opening to create a borehole through the remainder of the concrete slab to approximately 2 in. into the underlying material.
3. After drilling through the slab, record the approximate thickness of the slab and clean any dust from the slab and wipe with a dampened towel. A shop vacuum can be used to clear the 1-in.-diameter borehole of loose material before drilling all the way through the slab. Do not vacuum the open hole, because vapors could be transmitted from under the slab into the indoor air that would bias the indoor air sample.
4. Upon completion of the borehole, an appropriate length of ¼-in.-outside diameter (OD) stainless-steel tubing will be cut to extend from ½ inch above the bottom of the 1-in.-diameter annular space borehole to a depth approximately 1 in. below the bottom of the slab. The stainless-steel tubing will then be attached to a ¼-in. stainless-steel union and tightened to secure the tubing in place. The assembly will then be placed into the borehole and checked for tightness within the borehole. The sub-slab soil gas monitoring point will also be equipped with a ¼-in. stainless-steel threaded plug so that it may be sealed from ambient air intrusion and/or sub-slab soil gas leakage to indoor air. The semi-permanent point should be recessed slightly under the surface of the concreate to prevent a tripping hazard.
5. The bottom of the stainless-steel tube will be set at approximately 1 to 2 in. below the concrete slab surface; therefore, the intake interval will be located within the near sub-slab environment, targeting the likeliest source of near-slab soil gas. Caution should be taken not to plug the end of the tube with the underlying material during installation.
6. A thin layer (approximately ¼ in. thick) of melted beeswax will be placed at the base of the 1-in.-diameter annular space borehole to seal the tubing and any potential void spaces between the stainless-steel tube and the ¼-in.-diameter borehole. The beeswax will be allowed to air cool and harden in place.
7. Following beeswax placement and cooling, a ½ to ¾-in.-thick (up to the lowest threads on the union) layer of quick-set expansion-type concrete will be placed into the 1-in.-diameter annular space borehole to cover the beeswax and further seal the sub-slab soil gas monitoring point preventing air communication between the sub-slab environment and the indoor air space.

ED_004144A_00000101-00972

8. After the sub-slab soil gas monitoring point is installed, the stainless-steel plug will be hand-tightened until snug, being careful not to over-tighten to avoid breaking the concrete seal.
9. The sub-slab soil gas monitoring points will be allowed to set up prior to conducting leak-check testing, purging, and sampling activities.

4. SUB-SLAB MONITOR POINT LEAK TEST PROCEDURE

Ambient air intrusion into gas/air samples may result in a dilution of the gas/air sample, and may produce results that underestimate actual site concentrations; or alternatively, may contaminate the sample with aboveground indoor air contaminants. Leak tests will be conducted at each sub-slab soil gas monitoring point. The leak tests to be employed during the field activities include a shut-in leak test and a tracer leak test. These leak tests will be used to assess whether a good seal was established in the sampling train, ground surface, and the probe interface. A leak can be considered present when the tracer compound is present in the test sample at more than 10 percent of the source concentration.

The tracer test is also designed to check for leaks in aboveground fittings, as well as the sub-slab soil gas monitoring point surface seal interface. The monitoring point seal integrity will be confirmed in real time by analyzing soil gas purge samples for the selected tracer compound. Helium will be used as the tracer compound during field activities; however, other tracer compounds, such as pentane, isopropanol, isobutene, propane, or butane, may be acceptable for use if the selected tracer compound is not a chemical of potential concern (COPC). Additional detail on leak test implementation is provided below. Additional or alternate leak detection methods may be acceptable if fully documented during field implementation.

Sub-Slab Sample Train Shut-In Test

Before connecting the flow regulator, check the Summa canister initial pressure and verify that the canister valve opens and closes correctly during the initial pressure check. A ¼-in. stainless-steel sample train will be connected to the flow regulator using compression fittings. The stainless-steel sample train will consist of a stainless-steel union tee with an attached stainless-steel ball valve located near the connection to the flow regulator for purging of the sample train. At the opposite end of the stainless-steel sample train, attach ¼-in. Teflon or Teflon-lined tubing (less than 3 ft) from the end of stainless-steel sample train to the sampling port for flexibility.

After the Teflon tubing is attached to the sample train, a shut-in test can be performed to check the connections at the flow regulator and along the sample train. With the purge valve closed, attach a hand vacuum pump to the end of the Teflon tube and apply a vacuum between -10 to -20 in. Hg on the sample train. If the vacuum does not drop over a 1-minute time interval, then the sample train is considered to be leak-free. If the vacuum does start dropping, then one of the connections is compromised and may need to be tightened and rechecked. If the sample connections cannot be determined to be leak-free, the use of another canister and flow regulator or sample train should be considered. Leaks are typically common on connections between flow regulators and canisters because of continuous reuse and possible over-tightening can damage connections.

ED_004144A_00000101-00973

After the shut-in test is complete, remove the hand vacuum pump and the Teflon tubing inserted through the ¼-inch opening at the top of the leak test shroud; then connect to the semi-permanent monitoring point installed in the slab. The shroud is then slid down the tubing to create an air chamber above the monitoring point.

Sub-Slab Sample Train Purging

Prior to collection of sub-slab soil gas samples, the sub-slab soil gas monitoring points will be purged of vapor using the calibrated low-flow purge pump to remove approximately three pore volumes from the sampling zone. The pore volume for the sub-slab soil gas monitoring points will be calculated based on known diameter and length, with an assumed 25-percent porosity, plus the internal volume of the tubing. The purge volume is typically 1 L, or about one Tedlar bag. The purpose of the purge is to ensure stagnant or ambient air is removed from the sampling system prior to sample collection. The purge will be completed at the same time as the leak test is performed. Purge volumes will be kept to a minimum to decrease the chance of leakage, reduce additional partitioning of potential contaminants into the vapor phase, and unnecessary movement of the soil gas to the sampling probe.

To complete the purge, the purge pump will be connected to the stainless-steel sample train near the canister at the ball valve using a short length of Teflon tubing with flexible Tygon tubing. The internal length of the Tygon tubing will be minimized whenever possible by fully inserting both ends of the tubing being connected. The outlet of the purge pump (Gil Air5 or similar) will be connected to a Tedlar bag using Teflon tubing connected with short lengths of flexible tubing. When purging is complete, the valve should be closed before turning the pump off to insure indoor air is not allowed into the sample train.

Sub-Slab Sample Port Tracer Gas Test

The final portion of the test is to validate the connection of the sample train to the sub-slab monitoring point and the seal of the monitoring point at the concrete slab. During the purge, medical-grade helium tracer gas will be applied directly to a shroud or "bucket" covering the sub-slab soil gas monitoring point by directing a tube from a helium tank source into the shroud. The interior space of the shroud will be monitored for helium concentration using a Radiodetection Helium/Hydrogen Multi-Gas Detector, Model MGD-2002. Once the interior of the shroud reaches approximately 50-percent helium, the purge pump will be activated and allowed to purge approximately 1 L of volume into the Tedlar bag from the sub-slab soil gas monitoring point. Slight pressure should be placed on the top of the shroud to create a seal at the shroud and concrete interface until the purge is complete. At this time, the helium detector will be removed from the shroud and the shroud plugged to retain the helium concentration. The helium detector will be allowed to equilibrate with atmosphere and later be connected to the Tedlar bag to assess helium concentration. The monitoring point will be considered sealed from atmospheric air intrusion if the helium meter does not detect 5 percent helium in the Tedlar bag. Additionally, the remaining volume of the Tedlar bag can be used to screen sub-slab soil gas concentrations of volatile organic compounds (VOCs) using a ppbRae or equivalent PID. All leak test and purge information should be recorded on the field sample form.

ED_004144A_00000101-00974

If helium is detected in the Tedlar bag above 5 percent, the integrity of the monitoring point will be assessed and repaired, if possible. Modeling clay may be utilized to seal potential cracks or penetrations in the monitoring point vault. Following confirmation that the monitoring point vault has been sealed from atmospheric air intrusion, the purge process should begin again. If the monitoring point vault is unable to be sealed, it should be abandoned and the location restored to pre-sample conditions. A replacement monitoring point should be installed at least 5 ft away from the initial location.

All sub-slab locations should be leak tested before activating the Summa canisters at other locations in the building. This ensures that if problems are encountered during leak testing, the sampling port can be reinstalled. Sampling should be postponed an additional day to allow for the newly-installed port to set up and ensure that vapor intrusion sample collection occurs within the same timeframe for that building.

5. SUB-SLAB SAMPLING PROCEDURE

After the leak test has been performed on the sample train and sampling ports for the building, the purge valve on the sample train should be checked to make sure it is in the closed position. As the Summa canister is turned on for sample collection, the regulator pressure should be checked against the initial pressure recorded on the canister sample tag. If there is a major difference in pressure, lightly tap on the gauge to ensure it is not sticking. The pressure, date, start time, and serial number of the canister and associated regulator should be recorded on the field sample form or in a field logbook along with the sample identification and any other important information. Typically an indoor air sample is co-located with the sub-slab location and would be initiated concurrently.

The canister setup and the surrounding area should be photographed. The next sub-slab location should be started within a few minutes following the first location to allow end times to stagger for shutdown of canisters. The Summa canister pressure should be checked periodically and gauges should tapped upon reading to determine if pressure gauge is reading correctly. The Summa canister should be closed at the flow regulator designated 24-hour sample time if the appropriate sample volume is collected. Sample volume depends on the amount the laboratory needs to run a sample and may be differ between laboratories. In most cases, if the initial canister pressure is at -30 in. Hg, then a sufficient sample volume would be achieved when the pressure was at -10 in. Hg.

The Summa canister should be closed if internal pressure reaches -5 in. Hg before the designated sample time. This will ensure that the Summa canister is shipped back to the lab under a low negative pressure for sample quality control. The Summa canister stop time will be used as the sample time on the chain-of-custody form. The Summa canister and regulator should be disassembled and packaged together during shipping. All information on the tag and field sampling form should be filled out along with the chain-of-custody form.

A duplicate sub-slab sample can be collected using a duplicate sampling tee. Two Summa canisters with flow regulators can be connected together using a sampling tee with equal lengths

ED_004144A_00000101-00975

that come together to connect into the sampling train. Both canisters are usually started and stopped at the same time even when they differ in ending pressure.

INDOOR AMBIENT AIR SAMPLING PROCEDURES

The following procedures for the collection of indoor air samples are based on applicable guidance and practical experience during the implementation of field activities on other projects. The procedures are intended to provide a specific process to follow for the collection of indoor air and outdoor ambient air samples. However, the procedures are also intended to be flexible enough to implement based on conditions encountered in the field.

Indoor air and outdoor ambient air samples will be collected at each building retained for additional evaluation. Potential indoor air sources of COPCs remaining in buildings, including the location within the building(s) and type of potential impact, will be documented. Portable vapor monitoring equipment may be useful for identifying unknown sources within buildings.

The operation of heating, ventilation, and air conditioning (HVAC) systems during sample collection will be noted on the Building Inventory and Indoor Air Sampling Questionnaire. When sampling activities are conducted, the building HVAC system should be operating in a manner consistent with normal operating conditions during building occupation.

To minimize the potential for interferences or dilution of indoor air samples, occupants will be asked to make a reasonable effort to avoid the following for a minimum of 24 hours prior to sampling and during the sample collection process:

- Opening windows or vents.
- Operating ventilation fans (unless special arrangements are made).
- Smoking adjacent to exterior intake air vents.
- Operating or storing unnecessary mechanical equipment in the building; however, necessary mechanical equipment may not be able to be removed, in which case it should be documented in the field notes.
- Allowing unnecessary containers of gasoline or oil to remain within the building. Heating fuel tanks inside buildings should be vented outside the building, or their vents should be temporarily sealed to prevent off-gassing inside the building.
- Cleaning, waxing, or polishing furniture, floors, or other woodwork with petroleum- or oil-based products.
- Using air fresheners or odor eliminators.
- Engaging in work tasks that use materials containing volatile chemicals.
- Building maintenance activities involving products containing volatile chemicals.
- Lawn mowing.
- Applying pesticides or insecticides.

ED_004144A_00000101-00976

- Wearing or bringing dry-cleaned clothing into the building.

The list above was based on guidance and may be modified to reflect the conditions of the site.

To collect an indoor air sample for VOC analysis using TO-15 and TO-15 SIM, the flow controller will be connected to the top of the Summa canister using Swagelok connections. A short length (hereafter, "short length" refers to approximately 3 to 4 in.) of tubing may be connected to the top of the flow controller to assist with placement of the sample collection point.

A shut-in test will be performed on the Summa canister and flow regulator and/or sample tubing connections to insure there are no leaks.

Indoor air samples will be collected from the breathing zone by placing the intake end of the sampling tubes approximately 3 to 5 ft above the floor (within the breathing zone), in high-use areas. For the Summa canisters (6-L), the laboratory-set flow rate will result in an 24-hour sample period. To initiate sample collection, the Summa canister valve will be opened to allow air to enter the Summa canister.

Periodically throughout the 24-hour sampling period for the Summa canisters, the pressure inside the canister will be monitored and the time required to reach the desired end sampling pressure (approximately -5 in. Hg) will be recorded and included on the chain-of-custody record. To terminate sample collection, the Summa canister valve will be closed and the sample will be contained within the canister. The sample identification and collection date/time will be recorded on the sample label attached to each Summa canister. To verify the final pressure following sample collection, the vacuum of the Summa canister can be measured using the same handheld pressure gauge that was used to verify the initial pressure. The initial and final pressures will be recorded on the chain-of-custody record. Digital photographs will be collected of the indoor air sample setup and sampling train.

A duplicate indoor air would consist of setting two Summa canisters with flow regulators side by side with identical sample start and stop times.

Pressure Differential Monitoring

The pressure differential between indoor air and outdoor air will be determined at each building during each indoor air sampling event, using a micromanometer (e.g., a FLUKE 922 Airflow Meter) as follows:

1. Press "pressure" to enter the pressure mode.
2. Connect a single hose to the input port (Input +), while leaving the reference port (Ref -) unconnected.
3. With the tubing open to ambient conditions (inside the structure), press and hold the zero button to calibrate the meter.

ED_004144A_00000101-00977

Place the input hose outside, while leaving the meter inside. The micromanometer will display the differential pressure outdoors with respect to the pressure indoors. For instance, a positive reading means that the air outside is positively pressured with respect to the air inside.

OUTDOOR AMBIENT AIR SAMPLING PROCEDURES

In addition to the indoor air samples, outdoor ambient air samples will be collected. Ambient air samples will be collected during the same 24-hour period as the indoor air samples, which represent outdoor air conditions for the entire sampling area. The ambient air samples will be collected in a laboratory batch-certified Summa canister, regulated for an 24-hour sample collection. A section of Teflon or Teflon-lined tubing that is identified as laboratory- or food- grade quality will be extended from the Summa canister to collect the ambient air sample from the breathing zone at approximately 3 to 5 ft above ground surface. Outdoor ambient air samples will be collected at a minimum of one (1) per day during the indoor air monitoring program. Based on scheduling and overall distribution of indoor air sampling locations, it will determine if more than one (1) ambient air sample is needed per day.

The following procedures for the collection of outdoor ambient air samples are based on applicable guidance and practical experience during the implementation of field activities on other projects. The procedures are intended to provide the specific process to follow to collect outdoor air samples. However, the procedures are also intended to be flexible enough to implement based on conditions encountered in the field.

Outdoor ambient air samples will be collected from outside of each building retained for vapor intrusion assessment from an area generally upwind of the building.

The procedures to collect an outdoor ambient air sample are identical to those described for indoor air samples. The Summa canisters will require temporary shelter during the 24-hour sample collection process, and should be secured from potential tampering. A 1- to 2-ft length of sample tubing may be attached to the canister to provide a drip loop, so that moisture will not directly enter the sampling orifice. Adhesives or materials potentially containing volatile constituents should be avoided when securing the outdoor air sampling apparatuses. Digital photographs will be collected of the outdoor air sample setup and sampling location.

ED_004144A_00000101-00978

SOIL GAS POINT INSTALLATION AND SAMPLING

INTRODUCTION

The primary purpose of a soil gas investigation is to further characterize and quantify the lateral and longitudinal extents of soil gas contamination within the vadose zone. The soil gas data will also be used to evaluate the potential for vapor intrusion in structures located onsite, downgradient of the site, or adjacent to the sampling locations.

Vadose zone monitoring can be used to develop subsequent site characterization activities such as installation of groundwater monitoring points. The vadose zone monitoring will be completed using an acceptable soil gas methodology and will include the collection of quality assurance and quality control samples.

Soil gas point locations will be pin flagged and labeled with the relevant sample location identification. Each pin flag will include sample identification information that can be used during a subsequent high-precision GPS survey.

1. SOIL GAS POINT INSTALLATION

Soil gas points will be installed using Geoprobe® direct-push or Macro-Core technologies to install stainless steel drive points to approximately 5 ft bgs (assuming no homes in the area have basements). If basements are identified, the steel drive points will be installed to the approximate depth of the basement floor. Once the sampling depth is reached, the 6-in. stainless steel sampling screen attached to a dedicated section of 0.25-in. diameter Teflon or Teflon-lined tubing (identified as laboratory or food grade) will be installed and used to collect the soil gas samples. The borehole will then be backfilled with sand/glass beads to a minimum of 6 in. above the screened interval. Granular bentonite pellets will then be placed from approximately 6 in. above the screen to the ground surface hydrating concurrently with placement. Sufficient time will then be provided for the bentonite to set (approximately 24 hours). Soil boring spoils are not expected to contain contaminants of potential concern and will be reworked into the surrounding ground surface. A typical soil gas point construction diagram is attached.

2. SOIL GAS POINT SAMPLING

Soil gas samples will be collected in the same manner at all locations to minimize possible discrepancies. The following procedures will be strictly adhered to when sampling soil gas:

- At least 24 hours after the installation of the temporary soil gas points, 2-3 implant volumes (i.e., the volume of the sample probe and tube) will be purged prior to collecting the samples to ensure that representative samples are collected.

- Flow rates for both purging and collecting will not exceed 0.2 liters per minute to minimize outdoor air infiltration during sampling.

ED_004144A_00000101-00979

- Samples will be collected using conventional sampling methods and appropriate containers, which meet project DQOs(e.g., investigation of areas where low or high concentrations of volatile chemicals are expected; to minimize losses of volatile chemicals that are susceptible to photodegradation), and meet the requirements of the sampling and analytical methods (e.g., low flow rate; Summa® canisters, which are certified clean by the laboratory, using an appropriate USEPA Method). The sample duration for these samples will be 0.5 hours.

- A tracer gas (e.g., helium, butane, or sulfur hexafluoride) will be used at each location before collecting soil gas samples to verify that adequate sampling techniques are being implemented (i.e., to verify infiltration of outdoor air is not occurring). Once verified, continued use of the tracer gas may be reconsidered.

When soil gas samples are collected, the following actions will be taken to document local conditions during sampling that may influence interpretation of the results:

- Sample location will be noted, including the site, area streets, neighboring commercial or industrial facilities (with estimated distance to the site), outdoor ambient air sample locations (if applicable), and compass orientation (north).

- Weather conditions (e.g., precipitation, outdoor temperature, barometric pressure, wind speed, and direction) will be noted for the past 24-48 hours.

- Any pertinent observations will be recorded, such as odors and readings from field instrumentation.

The field sampling team will maintain a soil gas sample log sheet summarizing the following:

- Sample identification
- Date and time of sample collection
- Sampling depth
- Identity of samplers
- Sampling methods and devices
- Purge volumes
- Volume of soil vapor extracted
- Canister and associated regulator identification
- Helium leak test results
- Vacuum before and after samples collected
- Apparent moisture content (dry, moist, saturated, etc.) of the sampling zone
- Chain-of-custody protocols and records used to track samples.

After the sample collection period, the Summa® canisters will be sent for subsequent laboratory analysis. The soil gas samples will then be analyzed for target constituents at an approved laboratory in accordance with the Eldorado Chemical Co. Sampling and Analysis Plan.

ED_004144A_00000101-00980

Upon completion of the sampling, the sample tubing will be removed and the temporary soil vapor point location will be backfilled with bentonite and marked with a stake/flag that will be labeled with the proper sample identification and illustrated on the site map so it can be located by the site surveyor or GPS operator. Borings performed in paved or concrete areas will be backfilled and refinished at the ground surface with concrete or cold patch.

ED_004144A_00000101-00981

BUILDING INVENTORY AND INDOOR AIR SAMPLING QUESTIONNAIRE

This form should be prepared by a person familiar with indoor air assessments with assistance from a person knowledgeable about the building. Complete this form for each building where interior samples (e.g., indoor air, crawlspace, or sub-slab soil gas samples) will be collected. Section I of this form should be used to assist in selecting an investigative strategy during work plan development. Section II should be used to assist in identifying complicating factors during a pre-sampling building walkthrough.

Preparer's Name_____Date/Time Prepared_____

Preparer's Affiliation_____Phone No._____

Purpose of Investigation_____

SECTION I: BUILDING INVENTORY

1. OCCUPANT OR BUILDING PERSONNEL:

Interviewed: Y / N

Last Name_____First Name_____

Address_____

City_____

Phone No._____

Number of Occupants/people at this location_____Age of Occupants_____

2. OWNER or LANDLORD: (Check if same as occupant_____.)

Interviewed: Y / N

Last Name_____First Name_____

Address_____

City_____

Phone No._____

3. BUILDING CHARACTERISTICS

Type of Building: (Circle appropriate response.)

Residential	School	Commercial/Multi-use
Industrial	Church	Other_____

ED_004144A_00000101-00982

If the property is residential, what type? (Circle appropriate response.)

Ranch	2-Family	3-Family
Raised Ranch	Split Level	Colonial
Cape Cod	Contemporary	Mobile Home
Duplex	Apartment House	Townhouse/Condo
Modular	Log Home	Other_____

If multiple units, how many?_____

If the property is commercial, what type?

Business types(s)_____

Does it include residences (i.e., multi-use)? Y / N If yes, how many? _____

Other characteristics:

Number of floors_____ Building age_____

Is the building insulated? Y / N How airtight? Tight / Average / Not Tight

Have occupants noticed chemical odors in the building? Y / N

If yes, please describe:_____

_____

4. AIRFLOW

Use air current tubes, tracer smoke, or knowledge about the building to evaluate airflow patterns and qualitatively describe:

Airflow between floors

_____

_____

_____

Airflow in building near suspected source

_____

_____

_____

Outdoor air infiltration

_____

_____

_____

Infiltration into air ducts

_____

_____

_____

ED_004144A_00000101-00983

5. **BASEMENT AND CONSTRUCTION CHARACTERISTICS** (Circle all that apply.)

a. Above-grade construction:	wood frame	log	concrete	brick
	constructed on pilings with enclosed air space		constructed on pilings with open air space	
b. Basement type:	full	crawlspace	slab-on-grade	other_____
c. Basement floor:	concrete	dirt	stone	other _____
d. Basement floor:	unsealed	sealed	sealed with_____	
e. Foundation walls:	poured	block	stone	other _____
f. Foundation walls:	unsealed	sealed	sealed with _____	
g. The basement is:	wet	damp	dry	
h. The basement is:	finished	unfinished	partially finished	
i. Sump present?	Y / N			
j. Water in sump?	Y / N / not applicable			

Basement or lowest level depth below grade_____(feet).

Identify potential soil vapor entry points and approximate size (e.g., cracks, utility ports, and drains).

_____

_____

6. **HEATING, VENTING, AND AIR CONDITIONING** (Circle all that apply.)

Type of heating system(s) used in this building: (Circle all that apply – not just primary.)

Hot air circulation	Heat pump	Hot water baseboard	
Space heaters	Stream radiation	Radiant floor	
Electric baseboard	Wood stove	Outdoor wood boiler	Other_____

The primary type of fuel used is:

Natural gas	Fuel oil	Kerosene
Electric	Propane	Solar
Wood	Coal	

Domestic hot water tank is fueled by:_____

Boiler/furnace is located in: Basement Outdoors Main floor Other_____

Do any of the heating appliances have cold-air intakes? Y / N
Type of air conditioning or ventilation used in this building:

Central air	Window units	Open windows	None
Commercial HVAC	Heat-recovery system	Passive air system	

ED_004144A_00000101-00984

Are there air distribution ducts present? Y / N

Describe the ventilation system in the building, its condition where visible, and the tightness of duct joints. Indicate the location of air supply and exhaust points on the floor plan.

_____

_____

_____

_____

Is there a radon mitigation system for the building/structure? Y / N Date of Installation _____

Is the system active or passive? Active/Passive

7. OCCUPANCY

Is basement/lowest level occupied? Full-time Occasionally Seldom Almost never

Level	**General Use of Each Floor (e.g., family room, bedroom, laundry, workshop, or storage).**
Basement	
1st Floor	
2nd Floor	
3rd Floor	

8. WATER AND SEWAGE

Water supply: Public water Drilled well Driven well Dug well Other_____

Sewage disposal: Public sewer Septic tank Leach field Dry well Other_____

ED_004144A_00000101-00985

9. FLOOR PLANS

Draw a plan view sketch of the basement and first floor of the building. Indicate air sampling locations, possible indoor air pollution sources and photoionization detector (PID) meter readings. If the building does not have a basement, please note that.

Basement:

First Floor:

ED_004144A_00000101-00986

10. OUTDOOR PLOT

Draw a sketch of the area surrounding the building being sampled. If applicable, provide information on spill locations, potential air contamination sources (e.g., industries, gas stations, repair shops, landfills, etc.), outdoor air sampling locations, and PID meter readings.

Also indicate compass direction, wind direction, and speed during sampling; the location of the well and septic system, if applicable; and a qualifying statement to help locate the site on a topographic map.

ED_004144A_00000101-00987

SECTION II: INDOOR AIR SAMPLING QUESTIONNAIRE

This section should be completed during a pre-sampling walk-through. If indoor air sources of COPCs are identified and removed, consider ventilating the building prior to sampling. However, ventilation and heating systems should be operating normally for 24 hours prior to sampling.

a) 1. FACTORS THAT MAY INFLUENCE INDOOR AIR QUALITY

Is there an attached garage? Y / N

Does the garage have a separate heating unit? Y / N / NA

Are petroleum-powered machines or vehicles stored in the garage (e.g., lawnmower, ATV, or car) Y / N /NA

Please specify_____

Has the building ever had a fire? Y / N When?_____

Is a kerosene or unvented gas space heater present? Y / N Where?_____

Is there a workshop or hobby/craft area? Y / N Where and type_____

Is there smoking in the building? Y / N How frequently?_____

Has painting/staining been done in the last 6 months? Y / N Where and when?_____

Is there new carpet, drapes or other textiles? Y / N Where and when?_____

Is there a kitchen exhaust fan? Y / N If yes, where is it vented?_____

Is there a bathroom exhaust fan? Y / N If yes, where is it vented?_____

Is there a clothes dryer? Y / N If yes, is it vented outside? Y / N

Are cleaning products, cosmetic products, or pesticides used that could interfere with indoor air sampling? Y / N

If yes, please describe_____

_____

_____

Do any of the building occupants use solvents at work? Y / N

(For example, is the building used for chemical manufacturing or a laboratory, auto mechanic or auto body shop, painting shop, fuel oil delivery area, or do any of the occupants work as a boiler mechanic, pesticide applicator, or cosmetologist?)

If yes, what types of solvents are used?_____

If yes, are his/her/their clothes washed at work? Y / N

Do any of the building occupants regularly use or work at a dry-cleaning service? (Circle appropriate response)

Yes, use dry cleaning regularly (weekly) No

Yes, use dry cleaning infrequently (monthly or less) Unknown

Yes, work at a dry cleaning services

ED_004144A_00000101-00988

2. **PRODUCT INVENTORY FORM** (For use during building walk-through.)

Make and model of field instrument used:_____

List specific products found in the residence that have the potential to affect indoor air quality:

Location	Product Description	Site (units)	Condition[1]	Chemical Ingredients	Field Instrument Reading (units)	Photo[2] Y / N

[1] Describe the condition of the product containers as **Unopened (UO), Used (U),** or **Deteriorated (D)**.

[2] Photographs of the front and back of product containers can replace the handwritten list of chemical ingredients. However, the photographs must be of good quality and ingredient labels must be legible.

This form was modified from:
ITRC (Interstate Technology and Regulatory Council). 2007. *Vapor Intrusion Pathway: A Practical Guideline*. VI-1. Washington, D.C.: Interstate Technology and Regulatory Council, Vapor Intrusion Team. Available at: www.itrcweb.org.

ED_004144A_00000101-00989

FIELD SAMPLING FORM FOR VAPOR INTRUSION ASSESSMENT

Samplers:	Site ID / Bldg ID	**EA Project #:** 14342168 **Client:** EPA Region 6 **Site:** Lane Plating Works Inc. Superfund Site, Dallas, County, Texas **Description:** Vapor Intrusion Assessment Sampling

Location ID: _____

Probe Installation Date/Time: _____

Slab Thickness:_____Probe Length: _____

Helium Leak Check Date/Time: _____

He% Shroud_____ He% Tedlar Bag_____ VOC Purge _____

Shut In Check PSI drop in 1 minute: _____

Sample Type: ☐ Indoor Air ☐ Sub-Slab ☐ Outdoor

Air Duplicate: ☐ Yes ☐ No

TO-15 SIM

Summa Sample ID: _____

Summa Canister ID: _____

Initial Canister Gauge Pressure: _____

Flow Control ID: _____

Flow Control Rate: _____

Canister Start Time/Date: _____

Canister End Time/Date: _____

Final Canister Gauge Pressure: _____

Comments/Observations:

_____

_____

_____

_____

_____

_____

Appendix G

Field Samplers Guide

United States Environmental Protection Agency

Sampler's Guide

Contract Laboratory Program Guidance for Field Samplers

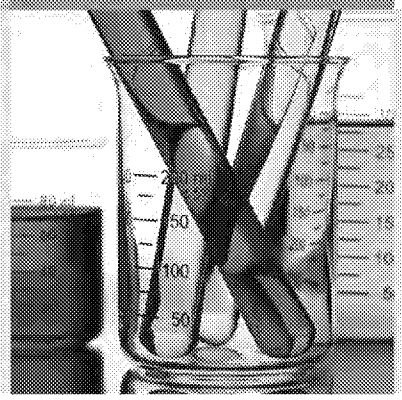

Office of Superfund Remediation and Technology Innovation (OSRTI)
United States Environmental Protection Agency (EPA)
Washington, DC 20460

OSWER 9200.2-147
EPA-540-R-014-013
October 2014

ED_004144A_00000101-00992

This page is intentionally left blank.

TABLE OF CONTENTS

1.0 INTRODUCTION 1

1.1 Overview of the CLP 2
1.1.1 Key Participants within the CLP 2

2.0 GENERAL SAMPLING INFORMATION 5

2.1 Goals of the Sampling Process 5
2.1.1 Follow the Required Sampling Procedures 5
2.1.2 Maintain Chain of Custody of Samples and Data 6
2.1.3 Field Operation Records 6
2.1.4 Comply with Safety Procedures 6
2.2 Obtain Municipal Permits, Licenses, and Clearances 6
2.2.1 Request Access to County, State, Tribal, Military, and/or Federal Property 6
2.2.2 Contact Private Property Owners 7
2.2.3 Contact Utility Companies 7
2.3 Review Request for Samples 7
2.3.1 Review Sample Request 8
2.4 Review Project Plans 8
2.4.1 Site Project Plan (SPP) 8
2.4.2 Health and Safety Plan (HASP) 8
2.4.3 Quality Assurance Project Plan (QAPP) 8
2.5 Assemble Sampling Materials 8
2.5.1 Equipment and Supplies 9
2.6 Perform Readiness Review/Dry Run 9
2.7 Assess the Status of the Site and the Team 9
2.8 Initiate Site Control Measures 10
2.9 Maintain Field Logbook 10
2.10 Preventing Errors 10
2.11 Exiting the Site 11

3.0 CLP STATEMENTS OF WORK 13

3.1 The CLP SOWs 13
3.2 CLP Sample Definition 13
3.2.1 Mixed-matrix Samples 13
3.3 CLP Analyses 14

4.0 CLP SAMPLE DOCUMENTATION 15

4.1 CLP Sample Numbers 16
4.1.1 Requesting Sample Numbers 16
4.2 CLP Case Numbers 17
4.2.1 Requesting Case Numbers 17
4.3 CLP TR/COC Records 17
4.4 Chain of Custody Seals 17
4.5 Sample Labels 18
4.6 Sample Tags 18
4.7 Sample Weight Logs 18

5.0 THE SCRIBE DOCUMENTATION SOFTWARE TOOL 21

5.1 Setting Up the Sampling Event in Scribe 21
5.1.1 Set Up Project 21
5.1.2 Verify/Create Analysis Types 22
5.1.3 Set Default Sample Tag Information 22
5.1.4 Indicate Modified Analysis (MA) on Scribe COC Records 22
5.1.5 Using Scribe for Mixed-matrix Samples 22
5.2 Scribe CLP Analysis Codes 23

ED_004144A_00000101-00994

6.0 CLP SAMPLE CONTAINERS 27

7.0 CLP SAMPLE COLLECTION 29

7.1 Requesting the Scheduling of the Laboratory 29
7.2 Preparing for the Shipping of Samples 29
7.2.1 Procure Shipping Supplies 29
7.2.2 Laboratory Assignment Notification 30
7.2.3 Verify Laboratory Shipping Information 30
7.2.4 Obtain Shipping Company Information 30
7.2.5 Prepare Sample Cooler Return Documentation 30
7.3 Collecting Samples 31
7.3.1 Field QC Samples 33
7.3.2 Laboratory QC Samples 33
7.4 Recording Samples 34
7.4.1 Hardcopy Recording 34
7.5 Meeting Volume, Preservation, and Holding Time Requirements 34
7.5.1 Collect Required Sample Volumes 34
7.5.2 Preserve Samples 35
7.5.3 Ship Samples within Holding Times 35
7.6 Completing the Documentation 36
7.6.1 Record and Label the Samples 36
7.6.2 Complete the COC Records in Scribe 37
7.6.3 Making Manual Edits to Printed Scribe COC Records 38
7.6.4 Complete and Attach Custody Seals 41
7.6.5 Complete and Attach Sample Tags 42
7.7 Providing a Sample Receipt 43

8.0 CLP SAMPLE TRANSPORTATION AND SHIPPING 45

8.1 Providing Shipment Notification 45
8.2 Packing and Shipping Samples 45
8.2.1 Inventory of Samples and Documentation 46
8.2.2 Shipping Regulations 46
8.2.3 Shipping Temperature 47
8.2.4 Pack Shipping Containers 47
8.2.5 Include Required Paperwork 48
8.2.6 Label and Seal Sample Shipping Coolers 48
8.2.7 Overnight Delivery 49
8.2.8 Saturday Delivery 49
8.2.9 Shipment Notification 49
8.2.10 Uploading the Electronic COC 50
8.2.11 Return Sample Shipping Coolers 50

9.0 SAMPLER RESOURCES 51

9.1 List of Resources 51
9.2 For More Information 52

APPENDIX A FUNCTIONS WITHIN A SAMPLING PROJECT A-1

APPENDIX B SAMPLE CONTAINER TYPE SPECIFICATIONS B-1

APPENDIX C CLP SAMPLE COLLECTION REQUIREMENTS BY ANALYSIS TYPE C-1

APPENDIX D CLP SAMPLE COLLECTION GUIDELINES FOR SOIL VOA SAMPLES BY SW-846 METHOD 5035A AND TCLP EXTRACTION – EPA SW 846 1311, SPLP EXTRACTION EPA SW 846 1312 ..... D-1

APPENDIX E GENERAL CLP SAMPLE COLLECTION GUIDELINES VOAS IN WATER E-1

APPENDIX F SAMPLING TECHNIQUES AND CONSIDERATIONS F-1

APPENDIX G INTERNATIONAL SHIPPING G-1

ED_004144A_00000101-00995

APPENDIX H SAMPLING CHECKLISTS **H-1**
APPENDIX I GLOSSARY **I-1**

LIST OF TABLES

Table 1-1. Participants in the CLP Sampling Process 2
Table 3-1. CLP Statements of Work 13
Table 4-1. CLP Sample Documents 15
Table 4-2. CLP Sample Number Letter Codes 16
Table 5-1. Scribe CLP Analysis Codes 23
Table 6-1. Sample Container Type Specifications 27
Table 7-1. Sample Types and CLP Submission Requirements 31
Table 7-2. Completing and Attaching a Custody Seal 41
Table 7-3. Completing and Attaching a Handwritten Sample Tag 42
Table 8-1. Packing Samples for Shipment 47
Table 9-1. Resources for Samplers 51
Table A-1. QAPP Requirements A-1
Table B-1. Sample Container Type Specifications B-1
Table B-2. Sample Container Type Specifications with Analysis B-2
Table C-1. Sample Collection Requirements for CLP SOW SOM02.X (Volatile Organic Analysis Only) C-1
Table C-2. Sample Collection Requirements for CLP SOW SOM02.X (SVOAs, Pesticides and Aroclors) C-3
Table C-3. Sample Collection Requirements for CLP SOW ISM02.X C-5
Table C-4. Sample Collection Requirements for CLP SOW HRSM01.X [CDDs, CDFs, and CBCs] C-6
Table F-1. Mixing a Sample and Filling Sample Containers F-3
Table H-1: Personnel Preparation Checklist H-1
Table H-2: General Sample Collection Checklist H-3
Table H-3: Completing Field Logbook Checklist H-4
Table H-4: Completing Handwritten Sample Labels Checklist H-5
Table H-5: Completing Handwritten Sample Tags & Custody Seals Checklists H-6
Table H-6: Packing Sample Container Checklist H-7
Table H-7: Packing Shipping Container Checklist H-8
Table H-8: Shipping & Reporting CLP Samples Checklist H-10

LIST OF FIGURES

Figure 4-1. Scribe Sample Weight Log 19
Figure 7-1. Packaged Sample with Identification and Chain of Custody Documentation (Excluding TR/COC Record) 36
Figure 7-2. COC Details Pop-up Window 37
Figure 7-3. Scribe Chain of Custody Record (Laboratory Copy) 39
Figure 7-4. Scribe Chain of Custody Record (Region Copy) 40
Figure 7-5. Custody Seal 41
Figure 7-6. Completed Sample Tag 42
Figure 7-7. Sample Receipt Created Using the Scribe Software 43
Figure 8-1. Sample Cooler with Attached TR/COC Record, PE Sample Instructions (if applicable), and Cooler Return Documentation 48
Figure 8-2. Shipping Cooler with Custody Seals 49
Figure G-1. Commercial Invoice Template G-2
Figure G-2. International Shipping Form (1 of 6) G-6
Figure G-5. International Shipping Form (4 of 6) G-9
Figure G-6. International Shipping Form (5 of 6) G-10
Figure G-7. International Shipping Form (6 of 6) G-11

ED_004144A_00000101-00996

LIST OF ACRONYMS

ARO	Aroclor
ASB	Analytical Services Branch
BTEX	Benzene, Toluene, Ethylbenzene, and Xylene
CBC	Chlorinated Biphenyl Congener
CDD	Chlorodibenzo-p-dioxin
CDF	Chlorodibenzofuran
CERCLA	Comprehensive Environmental Response, Compensation, and Liability Act
CLP	Contract Laboratory Program
CLP COR	CLP Contracting Officer's Representative
CLPSS	Contract Laboratory Program Support System
COC	Chain of Custody
CRQL	Contract Required Quantitation Limit
CVAA	Cold Vapor Atomic Absorption
CWA	Clean Water Act
DOT	Department of Transportation
DQO	Data Quality Objective
ERT	Environmental Response Team (EPA)
ET	Eastern Time
EPA	United States Environmental Protection Agency
FSP	Field Sampling Plan
GPS	Global Positioning System
HASP	Health and Safety Plan
HCN	Hydrocyanic Acid
HRSM	High Resolution Superfund Methods Multi-Media, Multi-Concentration Statement of Work
HTML	Hypertext Markup Language
IATA	International Air Transport Association
ICP-AES	Inductively Coupled Plasma-Atomic Emission Spectroscopy
ICP-MS	Inductively Coupled Plasma-Mass Spectrometry
ISM	Inorganic Superfund Methods: Multi-Media, Multi-Concentration Inorganics Analysis Statement of Work
MA	Modified Analysis
MS	Matrix Spike
MSD	Matrix Spike Duplicate
NIOSH	National Institute for Occupational Safety and Health
NPL	National Priorities List
OSC	On-scene/on-site Coordinator
OSHA	Occupational Safety and Health Administration
OSRTI	Office of Superfund Remediation and Technology Innovation
OSWER	Office of Solid Waste and Emergency Response
PCBs	Polychlorinated Biphenyls
PHMSA	Pipeline and Hazardous Materials Safety Administration
PE	Performance Evaluation
ppb	Parts-Per-Billion
PPE	Personal Protective Equipment

ED_004144A_00000101-00997

ppm	Parts-Per-Million
ppt	Parts-Per-Trillion
PRP	Potentially Responsible Party
PTFE	Polytetrafluoroethylene
PVC	Polyvinyl Chloride
QA	Quality Assurance
QAPP	Quality Assurance Project Plan
QASPER	Quality Assurance Sampling Plan for Environmental Response
QATS	Quality Assurance Technical Support
QC	Quality Control
RAS	Routine Analytical Services
RPM	Remedial Project Manager
RSCC	Regional Sample Control Coordinator
SAM	Site Assessment Manager
SAP	Sampling Analysis Plan
SARA	Superfund Amendments and Reauthorization Act
SDG	Sample Delivery Group
SIM	Selected Ion Monitoring
SMC	System Monitoring Compound
SMO	Sample Management Office
SOM	Superfund Organic Methods: Multi-Media, Multi-Concentration Organics Analysis Statement of Work
SOP	Standard Operating Procedure
SOW	Statement of Work
SPLP	Synthetic Precipitation Leaching Procedure
SPP	Site Project Plan
SVOA	Semivolatile Organic Analyte
TCLP	Toxicity Characteristic Leaching Procedure
TR/COC	Traffic Report/Chain of Custody
UN	United Nations
USCG	United States Coast Guard
USDA	United States Department of Agriculture
VOA	Volatile Organic Analyte
XML	eXtensible Markup Language

ED_004144A_00000101-00998

This page is intentionally left blank.

ED_004144A_00000101-00999

1.0 INTRODUCTION

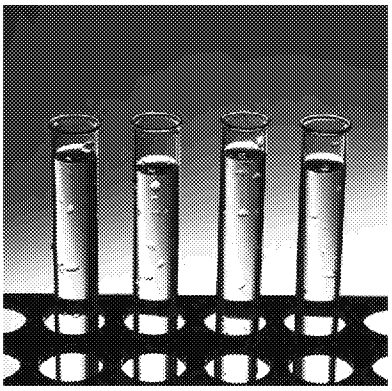

The *Contract Laboratory Program Guidance for Field Samplers* (also referred to as the *Sampler's Guide*) describes the organizational roles and responsibilities for those who plan and conduct environmental sample collection for analysis through the United States Environmental Protection Agency (EPA) Contract Laboratory Program (CLP).

The following lists the sections of this Guide:

- Section 1, *Introduction*, introduces the structure and purpose of this document.
- Section 2, *General Sampling Information*, describes the general activities associated with environmental sampling.
- Section 3, *CLP Statements of Work*, describes the statements of work (SOWs) that define the requirements for CLP sampling.
- Section 4, *CLP Sampling Documentation*, lists the types of documentation used to track the CLP samples.
- Section 5, *The Scribe Documentation Software Tool*, provides information about Scribe, a software tool used to create sample documentation.
- Section 6, *CLP Sample Containers*, describes the types of containers required for CLP samples.
- Section 7, *CLP Sample Collection*, describes the process by which CLP samples are collected.
- Section 8, *CLP Sample Transportation and Shipping*, outlines the requirements for the packing and shipping of CLP samples.
- Section 9, *Sampler Resources*, provides links to additional information for sampling organizations.

The following lists the appendixes of this Guide:

- Appendix A, *Functions within a Sampling Project*, describes the functions within a sampling project which are taken from the Quality Assurance Project Plan (QAPP) requirements.
- Appendix B, *Sample Container Type Specifications*, lists the required containers for CLP samples.
- Appendix C, *CLP Sample Collection Requirements by Analysis Type*, contains the sample collection requirements by SOW.
- Appendix D, *CLP Sample Collection Guidelines for Soil VOA Samples by SW-846 Method 5035A and TCLP Extraction – EPA SW 846 1311, SPLP Extraction EPA SW 846 1312* provides guidelines for VOA soil samples.
- Appendix E, *General CLP Sample Collection Guidelines VOAs in Water*, provides guidelines for Volatile Organic Analyte (VOA) water samples.
- Appendix F, *Sampling Techniques and Considerations*, recommends sampling techniques.
- Appendix G, *International Shipping*, contains information regarding shipping samples to laboratories outside the United States.
- Appendix H, *Sampling Checklists*, contains checklists used to help the sampler ensure that all necessary steps are completed.
- Appendix I, *Glossary*, provides definitions for sampling terms.

If the field sampling team is planning to use the CLP, they should use this Guide to develop the Site Project Plan (SPP)/Quality Assurance Project Plan (QAPP) and Field Sampling Plan (FSP) documents.

ED_004144A_00000101-01000

1.1 Overview of the CLP

The CLP is a national network of EPA personnel, commercial laboratories, and support contractors whose fundamental mission is to provide environmental sample collection and analysis under the Superfund program. The Superfund program was established under the Comprehensive Environmental Response, Compensation, and Liability Act (CERCLA) of 1980 and presently exists under the Superfund Amendments and Reauthorization Act (SARA) of 1986. The CLP is directed by the EPA Analytical Services Branch (ASB) from within the Office of Superfund Remediation and Technology Innovation (OSRTI) in the Office of Solid Waste and Emergency Response (OSWER).

The primary responsibility of the CLP is to provide analytical data of known and documented quality to CLP customers through its routine and modified chemical analytical services. The CLP provides a framework that allows data to be produced in a cost-effective and efficient manner. In addition, the CLP has established strict Quality Control (QC) procedures and detailed documentation requirements to ensure the consistent quality of the data. Current CLP data users include the EPA Regions, State and Tribal governments, and other Federal agencies.

1.1.1 Key Participants within the CLP

In coordinating Superfund sampling efforts, ASB is supported by the Sample Management Office (SMO) contractor, Quality Assurance Technical Support (QATS), Regional CLP Contracting Officer's Representative (CLP CORs), Regional Sample Control Coordinators (RSCCs), Site Assessment Managers (SAMs), On-scene/On-site Coordinators (OSCs), and Remedial Project Managers (RPMs). Samplers may work directly with the RSCC, and/or an OSC from the Site Support Personnel during a sampling event. Refer to Table 1-1 for a description of the functions performed by key participants (functions may vary by Region).

Table 1-1. Participants in the CLP Sampling Process

Participants	Responsibilities
Analytical Services Branch (ASB)	ASB directs the CLP from within the Office of Superfund Remediation and Technology Innovation (OSRTI) in the Office of Solid Waste and Emergency Response (OSWER). ASB responsibilities include: • Development of the Statements of Work (SOWs) that define required analytical methods (including QC, detection/quantitation limits, and holding times) for the analytical services procured under the CLP • Development and implementation of policies and budgets for Superfund analytical operations • Development of information management policies and products for analytical data • Management of SMO and QATS contracts • National administration, evaluation, and management of the CLP • Direction of CLP Quality Assurance (QA) activities in coordination with overall OSWER QA activities To obtain the most current ASB contact list, refer to the following Web site: http://www.epa.gov/superfund/programs/clp/contacts.htm#ASB
CLP Sample Management Office (SMO)	The contractor-operated SMO provides management, operations, and administrative support to the CLP. SMO receives Regional analytical requests, coordinates and schedules sample analyses, and tracks sample shipments. SMO also receives and checks data for completeness and compliance, processes laboratory invoices, and maintains a repository of sampling records and program data.

ED_004144A_00000101-01001

Participants	Responsibilities
CLP Contract Laboratories	The contractor-operated laboratories within CLP provide analytical services for the separation, detection, and quantitation of the CLP's target analytes. To obtain the most current list of CLP Contract Laboratories, refer to the following Web site: http://www.epa.gov/superfund/programs/clp/lablist.htm
Environmental Response Team (ERT)	The ERT is responsible for the development, implementation, and management of the Scribe software system. In addition, the ERT oversees the development of Scribe training webinars and on-site training.
Environmental Response Team (ERT) Support Contractors	The ERT Support Contractors provide technical and administrative support for the development, implementation, and management of the Scribe software system. In addition, the ERT Contractors support the development of Scribe training webinars and on-site training.
Regional CLP Contracting Officer's Representative (CLP COR)	The CLP COR monitors the technical performance of the contract laboratories in each Region. The CLP COR works closely with ASB Program Managers to identify and resolve laboratory technical issues, and leads laboratory on-site evaluations. To obtain the most current CLP COR contact list, refer to the following Web site: http://www.epa.gov/superfund/programs/clp/reglist.htm
Regional Sample Control Coordinator (RSCC)	In most Regions, the RSCC coordinates sampling efforts and serves as the central point-of-contact for sampling questions and problems. The RSCC works with SMO to schedule sample shipments to laboratories. In addition, the RSCC's activities may include informing SMO of sample shipment, cancellations, special instructions, and sampling issues. To obtain the most current RSCC contact list, refer to the following Web site: http://www.epa.gov/superfund/programs/clp/reglist.htm
Site Support Personnel	The Site Support Personnel consist of the EPA personnel and contractors responsible for developing the QAPP and Sampling Plan for the sampling episode at the site. It includes such personnel as the sampling team, Quality Assurance personnel, OSC, SAM, and Remedial Project Manager (RPM). In most Regions, the Site Support Personnel develop Standard Operating Procedures (SOPs) for field sampling and related procedures, and assist sampling teams in adhering to the SOPs. The sampling team determines what type(s) of CLP services will be required for a particular sampling event. The Site Support Personnel review Sampling Analysis Plans (SAPs) prepared by sampling teams and oversees sampling teams in the field. In addition, the state or territorial environmental protection agency for the location of the site provides support for the sampling event.

ED_004144A_00000101-01002

This page is intentionally left blank.

ED_004144A_00000101-01003

2.0 GENERAL SAMPLING INFORMATION

2.1 Goals of the Sampling Process

Once the U.S. Environmental Protection Agency (EPA) has determined that physical, chemical, and/or biological testing of a site is necessary, samples of material from the site area must be collected. The type of material that must be collected and the analytical method to be used depends upon the physical location of the site, detection level(s), site history (previous sampling), and known or unknown conditions and contaminants. Samples should be collected according to the approved project and site-specific Quality Assurance Project Plan (QAPP) and Sampling Analysis Plan (SAP). This Guide does not define specific sampling procedures as these depend upon individual site conditions, Regional requirements, and acceptance and performance criteria. Since Regions may have their own specific requirements for individual sampling programs, they are responsible for generating Region-specific sampling Standard Operating Procedures (SOPs).

2.1.1 Follow the Required Sampling Procedures

It is imperative that samplers be aware of the minimum Contract Laboratory Plan (CLP) and Regional requirements that directly impact and define how a sampling event will take place. It is important to note that the procedures and guidelines set forth in this document are considered minimum CLP requirements.

The purpose of sampling is to collect representative portions from a suspected contaminated site. Sample collection is critical to determining the presence, type, concentration, and extent of environmental contamination by hazardous substances; thus, it is a crucial part of every sampling and environmental testing effort. Sampling procedures must be consistently followed to mitigate risk of error and the expense of re-sampling.

Failure to follow proper sampling and shipping procedures could result in samples that are contaminated, in broken containers, mislabeled, lost during shipping, or unusable because of a missed holding time. If procedures are inconsistently or improperly followed, any resultant analytical data may be inaccurate and may not be legally defensible.

If re-sampling is needed due to improper sampling, the sampling team may incur the laboratory cost.

ED_004144A_00000101-01004

2.1.2 Maintain Chain of Custody of Samples and Data

Acquiring accurate and legally defensible data is the CLP's primary objective; therefore, the sampler must collect samples according to strict sampling procedures, plans, and guidelines. EPA and many other Federal agencies use data resulting from analytical testing of samples to:

- Determine if a site is contaminated with organic and/or inorganic compounds
- Identify pollution sources
- Identify Potentially Responsible Parties (PRPs)
- Validate remedial design methodologies
- Assess response and remedial priorities
- Assess risk to human health and the environment
- Determine appropriate cleanup actions
- Determine cleanup achievements

2.1.3 Field Operation Records

Samplers should maintain complete, accurate, and legible field operations records as they perform a sampling activity. The following records are included:

- Field logbooks
- Corrective Action reports
- Sampling trip reports
- Supplemental standardized forms
- Records such as maps or photographs that document each step of the work performed in the field

Samplers should refer to their project plans for Region-specific field operations record requirements. These records are very important tools because they are considered part of the official project file when legal issues arise.

2.1.4 Comply with Safety Procedures

Care must be taken to maintain the safety of personnel collecting and handling CLP samples. If sampling requires digging in soil, utility lines (gas, soil, cable, etc.) must be marked to prevent injury or utility outage. Samples must be handled, packed, and shipped in accordance with all applicable Federal [Operational Safety and Health Administration (OSHA) and Department of Transportation (DOT)] regulations for hazardous materials. Refer to the Health and Safety Plan (HASP) for detailed site safety requirements.

2.2 Obtain Municipal Permits, Licenses, and Clearances

Before starting a sampling event, samplers must make sure to obtain the proper municipal permits, accesses to the property, and any government clearances, if required. The sampler must also contact any appropriate utility companies to ascertain where any underground pipes, cables, etc., may be located.

2.2.1 Request Access to County, State, Tribal, Military, and/or Federal Property

Proper access to perform sampling activities is important not only for legal reasons, but also to eliminate delays in work and possible refusal to allow sampling to take place. It is crucial that the appropriate permits, licenses, and clearances be secured to obtain access for sampling activities that will be performed on County, State, Tribal, military, and/or Federal property. The sampler must contact the appropriate government offices or personnel well in advance to determine what kinds of approval are required. Pre-approval may be required for specific types of sample

ED_004144A_00000101-01005

collection such as drilling or excavation. For example, drilling on a military base requires pre-approval. Base security may require clearances for all members of the sampling team, including subcontractors. This process may take two or more days.

2.2.2 Contact Private Property Owners

The sampler must obtain written permission from the private property owner(s) before sampling on his/her property, even if verbal permission has been granted. It is recommended that samplers obtain verbal permission prior to their arrival at the sampling location, but written permission can be obtained on the day of sampling. If a property owner refuses to grant access to his/her property, it may be necessary for the sampling organization to contact the appropriate authorities for assistance. A sampler who enters private property without permission may be subject to a charge of trespassing, and samples may be considered part of an illegal search and invalid for legal proceedings.

2.2.3 Contact Utility Companies

The sampler should contact local utility companies (e.g., power, phone, gas, cable, sanitation, etc.) at least one week prior to the sampling event to have underground cables, lines, and pipes flagged and marked. This is required by law. A national one-call directory can be found at: http://www.call811.com.

It may be necessary to turn off the utilities (i.e., electrical wires or gas lines) in order to obtain samples. The utility service(s) disruption dates should be confirmed at least two days prior to sampling activities. Samplers should follow Regional or other appropriate program procedures for the disruption of utilities.

Pre-payment of survey fees to local utility companies may be required.

2.3 Review Request for Samples

In order to prepare for the sampling event, the sampler should review the request for samples from the CLP. This information may be in the form of the "Scheduling Notification Form" from Sample Management Office (SMO), supplied by the Regional Sample Control Coordinator (RSCC), or in other forms of communication from the Region or other organization. Field team leaders should contact their RSCC or Remedial Project Manager (RPM) to review this information prior to going into the field, and assure that this information matches information in the Site Project Plan (SPP) and/or QAPP.

Use the following information for planning:

- **Sample information**: Take note of the number of samples requested, the sample matrix, and the analyses. This information will be used to determine the equipment and supplies needed for the sampling event.
- **Site location**: Determines whether there are any specific requirements for accessing/exiting the site, or for working at the site.
- **Shipping period**: Determines when the samples are to be shipped to the laboratory. It helps determine when sampling should occur.
- **Laboratory information**: Determines where the samples will be shipped.

ED_004144A_00000101-01006

2.3.1 Review Sample Request

The sample request determines many of the other preparatory activities for the sample event. Review the sample request for the following information:

- ☐ Determine the number and types of samples to be collected.
- ☐ Review the required sample collection method(s).
- ☐ Review decontamination procedures necessary for site.
- ☐ Make note of sample holding times and conditions.
- ☐ Determine Performance Evaluation (PE) and Quality Control (QC) sample requirements.
- ☐ Determine whether shipping cooler temperature blanks are required.

2.4 Review Project Plans

Project plans describe, in detail, the requirements for the sampling event. All field team members should be familiar with the applicable project plans prior to beginning field sampling. These plans may include the following documents.

2.4.1 Site Project Plan (SPP)

The SPP describes the requirements for any activity taking place at the site. It contains information such as site history, potential contaminants, topographical information, etc. This information may be combined into the QAPP.

2.4.2 Health and Safety Plan (HASP)

The HASP describes the measures necessary to maintain the health and safety of the sampling team during the sampling event. It can include topics such as the following:

- Organization structure
- Job hazard analysis
- Site control
- Training
- Medical surveillance
- Personal protective equipment (PPE)
- Exposure monitoring
- Thermal stress
- Decontamination
- Emergency response
- Standard operating procedures
- Confined space operations
- Spill containment

2.4.3 Quality Assurance Project Plan (QAPP)

The QAPP describes the data quality objectives and data requirements for the project, and is used by samplers to develop any subsequent plans such as the Sampling Analysis Plan (SAP) or the Field Sampling Plan (FSP).

2.5 Assemble Sampling Materials

Samplers must be prepared for a sampling project by assembling the appropriate sampling materials (equipment, supplies, sample containers, packing materials, and shipping materials).

ED_004144A_00000101-01007

The equipment and supplies must be properly cleaned, calibrated, and tested as necessary to meet the needs of the sampling project.

2.5.1 Equipment and Supplies

Samplers should review the project plans to determine the equipment necessary for sample collection.

The following materials should be obtained prior to a sampling event:

- Sample containers
- Shipping containers
- Packing material
- Access to the Scribe software for creating sample labels, stickers, tags, and Traffic Report/Chain of Custody (TR/COC) records
- Custody seals
- Sampling equipment such as bowls, augers, pumps, etc.
- Personal Protective Equipment (PPE)
- Internet access (either at the time of sampling or soon after the samples are shipped)

The CLP Statement of Work (SOW) may also require field samplers to provide the following:

- Cooler temperature blanks
- Trip blanks for Volatile Organic Analyte (VOA) analysis
- Preservation supplies (e.g., ice or acid)
- Specially prepared sample vials (e.g., VOA analyses)
- Utensils or equipment for handling tissue samples requested by modified analysis

2.6 Perform Readiness Review/Dry Run

A readiness review/dry run is a test run of the proposed sampling event. This is a recommended practice since it gives samplers a chance to review all plans, documentation software (i.e., Scribe), and equipment lists for accuracy and completeness prior to sampling activities. It also provides an opportunity to consult with sampling team members to make sure that all the elements are in place and everyone understands their task before actually going out to the field. Sampling project managers should provide the readiness review or dry run dates and schedules to samplers so that they can prepare accordingly.

2.7 Assess the Status of the Site and the Team

Prior to beginning the sampling, make sure that all of the preparatory work is complete and that the team is ready to begin. Some issues to consider are:

- ☐ Ensure that personnel roles and lines of authority are established.
- ☐ Ensure that permission has been granted to enter the site and collect samples.
- ☐ Ensure that utility work has been completed (if required).
- ☐ Review local weather forecast to be aware of possible dangerous weather conditions. Ensure that sampling staff are prepared for weather conditions.
- ☐ If the sampling location is inaccessible, contact the appropriate field or Regional personnel for instruction.
- ☐ Verify that the correct sampling equipment is on site.
- ☐ Ensure that personal safety measures are in place.
- ☐ Ensure that a site HASP is in place, including procedures for emergency medical treatment and first aid, evacuation procedures, emergency contacts, and location of emergency medical facilities.

ED_004144A_00000101-01008

- ☐ Identify and mark the sampling location with buoys, flags, or stakes according to the sampling plans, maps, and grids.
- ☐ Park the car/van away from the sampling site and turn off the engine. Be aware of car exhaust (BTEX) contamination to volatile organic samples through all procedures, including loading and unloading the coolers during the shipping.

2.8 Initiate Site Control Measures

The sampling team is responsible for controlling the site during the sampling event. Use the following guidelines to maintain site control:

- ☐ Maintain a log of authorized personnel entering the site.
- ☐ Prevent unauthorized persons from entering the site.
- ☐ Ensure that any decontamination procedures required in the HASP are in place and are followed.

2.9 Maintain Field Logbook

Samplers must maintain a field logbook that documents the field activities. The information from the field logbooks becomes evidence and can be used in court. The following list is criteria for a field log book:

- ☐ Use waterproof ink to record in the field logbook.
- ☐ Record the date and time of all entries.
- ☐ Correct any errors by crossing a line through the error, initialing the error, dating the error, and then adding the correct information.
- ☐ Document sampling project information such as:
  - Project name, ID, and location
  - Names of samplers
  - Geological observations, including maps and Global Positioning System (GPS) information
  - Atmospheric conditions
  - Field measurements
  - Sampling dates, times, and locations
- ☐ Record sampling activity information such as:
  - Sampling dates and times
  - Sample identifications
  - Sample matrices
  - Sample descriptions (e.g., odors and/or colors)
  - Number of samples taken
  - Sampling methods/equipment
- ☐ Record any and all deviations from the sampling plan.
- ☐ Record any and all difficulties in sampling and/or any unusual circumstances.

2.10 Preventing Errors

Errors in the sampling process can result in additional costs and delayed sampling results. The following section lists some of the ways to avoid common sampling errors.

Document samples correctly:

- ☐ Use the CLP Sample Number and SMO-assigned CLP Case Number correctly (sample number on each sample).
- ☐ Submit the signed TR/COC record with the sample(s).

ED_004144A_00000101-01009

- ☐ Accurately and legibly complete and attach a custody seal to each shipping container. (The project QAPP may also required that custody seals be attached to each sample container or plastic sample bag. Refer to the project QAPP for specific instructions.)

Collect and preserve samples correctly:

- ☐ Collect a sufficient volume of sample so that the laboratory can perform the requested analysis and quality controls, such as Matrix Spike (MS), Matrix Spike Duplicate (MSD), and Duplicates.
- ☐ Make sure that the sample is preserved, if required, and that the sample pH is within the required range.

Ship samples correctly:

- ☐ Pack bottles and containers to avoid breaking or spilling during shipping.
- ☐ For iced samples, evenly distribute bags/packets of ice throughout the cooler and between the sample containers to ensure that all samples are sufficiently cooled to a temperature of ≤6°C, but not frozen.
- ☐ Ensure that shipping containers have custody seals attached.
- ☐ Ensure that samples are shipped to the correct laboratory address.
- ☐ If samples are to be shipped internationally, additional paperwork or customs authorizations may be required. Refer to Appendix G, International Shipping for additional information.
- ☐ Upload the Electronic Chain of Custody (COC) as soon as possible after shipping.

Communicate effectively:

- ☐ It is extremely important that all parties involved in a sampling event be in contact throughout the sampling process. It has been demonstrated that approximately 50% of all sampling efforts have been negatively affected by incorrect sampling procedures and poor communication among participants.
- ☐ The key elements of communication for a sampling event include the relationship between the RSCC, SMO, the samplers in the field, and the laboratories who will be accepting the samples.
- ☐ If there are any changes to the sampling event due to a cancellation or an increase or decrease in the number of samples that will be sent to the laboratory, the sampler should contact the RSCC as soon as possible. The RSCC can work with SMO to remedy potential capacity, availability, or overbooking problems with the CLP laboratories.

2.11 Exiting the Site

The following activities take place before leaving the sampling site:

- ☐ Ensure that all equipment has been collected and removed.
- ☐ Follow Regional guidance regarding decontamination and doffing of PPE, if used.
- ☐ Follow Regional guidance for waste removal and disposal.
- ☐ Ensure that all sampling personnel have cleared the site.
- ☐ If sampling on private property, provide a sample receipt to the property owner for all samples taken and removed from the site.

ED_004144A_00000101-01010

This page is intentionally left blank.

ED_004144A_00000101-01011

3.0 CLP STATEMENTS OF WORK

The overall requirements for sample collection, analysis, and handling under the Contract Laboratory Program (CLP) are described in the CLP Statements of Work (SOWs).

3.1 The CLP SOWs

Table 3-1 lists the CLP statements of work.

Table 3-1. CLP Statements of Work

Statement of Work	Analysis Types	Matrix Types
HRSM01.X	Chlorinated Dibenzo-p-Dioxins (CDDs) and Chlorinated Dibenzofurans (CDFs) Chlorinated Biphenyl Congeners (CBCs)	Soil, sediment, biosolids, oil, sludge, ash, tissue, water, and wipe
SOM02.X	Trace Volatile Organic Analytes (Trace VOA) Volatile Organic Analytes (VOA) Semivolatile Organic Analytes (SVOA) SVOA Selected Ion Monitoring (SIM) Pesticides Aroclors	Soil, sediment, water, Toxicity Characteristics Leaching Procedure (TCLP)/ Synthetic Precipitation Leaching Procedure (SPLP) leachate samples
ISM02.X	Metals by Inductively Coupled Plasma-Atomic Emission Spectroscopy (ICP-AES), Inductively Coupled Plasma-Mass Spectrometry (ICP-MS), Mercury by Cold Vapor Atomic Absorption (CVAA) Spectrometry, Cyanide by Spectrophotometry	Soil, sediment, water, TCLP/SPLP leachate, and wipe samples

These statements of work are available on the U.S. Environmental Protection Agency (EPA) Web site at: http://www.epa.gov/superfund/programs/clp/analytic.htm

3.2 CLP Sample Definition

A CLP sample is defined as one discrete portion of material to be analyzed that is contained at one concentration level from one location for each individual or set of analyses – provided that the analyses are all requested for the same CLP analytical service (i.e., organic or inorganic), and identified by a unique sample number.

A sample consists of all sample aliquots (portions), provided that the analyses are all requested from the same CLP analytical program:

- for each individual or set of analytical methods
- from one location
- for one sample matrix
- at one concentration level
- for one laboratory
- for one analytical program

3.2.1 Mixed-matrix Samples

In some instances, a mixed-matrix sample may be collected which contains either a supernate (for a sediment/soil sample) or a precipitate (for a water sample). The decisions made with regard to the different matrices in such samples can have profound impacts on data usability. In this event,

ED_004144A_00000101-01012

samplers should consult their sampling plans and/or discuss the required procedures with the Remedial Project Manager (RPM) (or designee).

In general, it is recommended that two individual samples be collected by separating the aqueous layer from the solid/precipitate layer at the point of collection if possible. If the phases or layers cannot be separated effectively in the field at the point of collection, arrangements should be made to separate the layers under controlled conditions at the receiving laboratory. In this case, additional sample numbers will be needed for the separate phases. They should be assigned two different sample IDs (e.g., Sample IDs ABC124 and ABC125 for Sample ID ABC123), along with a note in the field sample log and in the Special Instructions section of the Chain of Custody (COC) form that the sample IDs are derived or related to the same sample. Refer to Section 5.15, Using Scribe for Mixed-matrix Samples for information on how to use the Scribe software to track mixed-matrix samples.

When samples are collected from several locations to form a composite sample, the sample should be assigned either a number from one of the locations used during collection, or a unique number that represents the composite sample, for tracking purposes. The numbering scheme used internally at a sampling event for identifying composite samples should also be documented appropriately (e.g., in the field logs).

3.3 CLP Analyses

CLP Routine Analytical Sample (RAS) analysis is generally used for Superfund sites, and includes the routine list of metals and organic analytes. The matrices can be water, leachates derived from the TCLP or SPLP soil, sediment, or wipes. Additional matrices requested under Modified Analysis (MA) may include oil, sludge, ash, construction wastes, biosolid, or tissue (non-human).

ED_004144A_00000101-01013

4.0 CLP SAMPLE DOCUMENTATION

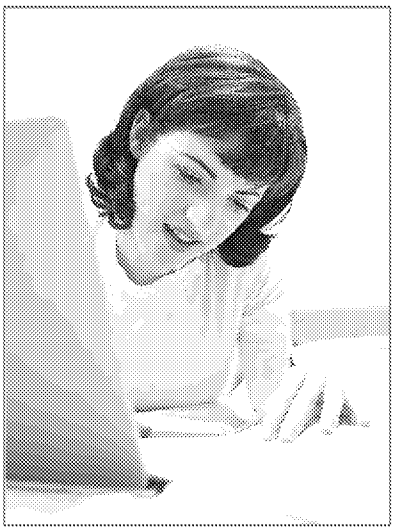

The U.S. Environmental Protection Agency (EPA) Contract Laboratory Program (CLP) is required to produce accurate and legally defensible data. In order to produce legally defensible data, control of the samples must be maintained to ensure that the samples correctly represent the site and location from which they were taken. Sample documents are tools that allow EPA to maintain the chain of custody of the samples from collection, through shipping, to analysis. It also associates the sample to the sample data. Samplers should review their site-specific project plans and Quality Assurance Project Plans (QAPPs) to determine other types of documentation that must be completed for a sampling project. The following section describes the documents used to maintain the chain of custody and the tools used to create these documents.

The following table summarizes the forms used for CLP sample documentation.

Table 4-1. CLP Sample Documents

Form Type	Source	Purpose
CLP Sample Number	Assigned by sampling software (Scribe); ranges are supplied by the Regional Sample Control Coordinator (RSCC)	Identifies sample data. Associates the sample to the sample data.
CLP Case Number	Assigned by the Sample Management Office (SMO)	Identifies groups of samples collected during a single sampling event.
Traffic Report/Chain of Custody (TR/COC) Record	Created in Scribe	Tracks chain of custody of the sample and sample data.
Custody seals	Supplied by the RSCC or field sampling team	Maintains sample integrity; may indicate sample tampering or contamination if broken.
Sample labels	Created in Scribe	Affixed to the sample container to identify an individual sample.
Sample tags	Sample tag labels are created in Scribe or are handwritten by sampler	Identifies a sample bottle or container that contains a sample, provides specific analytical direction, and provides proof that a sample existed. (Sample tags are not a CLP requirement.)
Field operations records (as necessary)	Created and maintained by sampling team	Maintains a record of activities at the site.
Shipping container label (to the laboratory)	Carrier standard form	Used by the carrier to ship the samples to the laboratory.
Cooler shipping label (return from laboratory)	Carrier standard form	Used by the carrier to return the cooler to the Region.

The documentation required by a Region for a sampling event is outlined in project plans such as the QAPP, Sampling Analysis Plan (SAP), and Field Sampling Plan (FSP).

ED_004144A_00000101-01014

EPA recommends that a dedicated field team member be responsible for all sample documentation steps, including reviewing laboratory scheduling information, creating sample labels and Traffic Report (TR)/Chain of Custody (COC) forms in Scribe, maintaining a field operations log, and relinquishing control of the samples to the laboratory. This person should be identified in the Site Project Plan (SPP) or QAPP.

Under no circumstances should the site name appear on any documentation that is sent to the laboratory (for the CLP).

4.1 CLP Sample Numbers

A sample number is a number that is unique per sampling location and identifies each CLP sample. It is used to identify and track samples throughout the sampling and analytical processes, and is recorded on many types of sampling documentation [e.g., Traffic Report/Chain of Custody (TR/COC) records, sample labels, and sample tags].

Organic CLP Sample Numbers begin with the Regional letter code, followed by four letters and/or numbers. Inorganic CLP Sample Numbers begin with "M" followed by the Regional letter code and then four letters and/or numbers. High Resolution CLP Sample Numbers begin with "P" followed by the Regional letter code and then four letters and/or numbers. See Table 4-2 for Region and letter codes for each sample type (i.e., organic, inorganic, or high resolution).

Table 4-2. CLP Sample Number Letter Codes

Region	Letter Code		
	Organic	Inorganic	High Resolution
1	A	MA	PA
2	B	MB	PB
3	C	MC	PC
4	D	MD	PD
5	E	ME	PE
6	F	MF	PF
7	G	MG	PG
8	H	MH	PH
9	Y	MY	PY
10	J	MJ	PJ

* According to CLP guidelines, each individual inorganic water sample may be analyzed for total metals or filtered metals, but not both. Therefore, water samples collected for total metal and filtered metal analyses from the same sampling location must be assigned separate unique CLP Sample Numbers. A sampler can use the same sample number for an inorganic soil or water sample collected for total metals, mercury, and cyanide analyses.

4.1.1 Requesting Sample Numbers

CLP Sample Numbers are created in Scribe with ranges supplied by the RSCC.

ED_004144A_00000101-01015

4.2 CLP Case Numbers

SMO-assigned Case numbers are used to track groups of samples from a sampling event throughout the sampling and analytical processes, and are recorded on many types of sampling documentation (e.g., TR/COC records, sample labels, and/or sample tags). Samplers must correctly assign the Case number to the appropriate sample bottle or container. CLP Case Numbers should be requested from the RSCC (or designee) or they may be provided by SMO.

4.2.1 Requesting Case Numbers

Case numbers are assigned by the Sample Management Office (SMO). Samplers request the assigned sample numbers and Case numbers through the RSCC.

4.3 CLP TR/COC Records

A TR/COC record is used as physical evidence of sample custody and as a permanent record for each sample collected. A chain of custody record documents the exchange and transportation of samples from the field to the laboratory.

To meet CLP sample documentation and chain of custody requirements, the sampler must attach a separate, signed TR/COC record to each cooler they ship.

- ☐ The TR/COC record must document each sample within the cooler.
- ☐ Each TR/COC record **must be signed by the designated field sampler**, documenting that they have relinquished control of the samples.
- ☐ TR/COC records should be separated and shipped in the coolers with the samples listed on them. Do not ship samples in a cooler without the corresponding TR/COC record. This practice maintains the chain of custody for all samples in case of incorrect shipment.
- ☐ The electronic COC record should be uploaded as soon as possible after shipping.

If more than one TR/COC record is used for the samples within one cooler, all of the records must have complete header information and original signatures. Samplers are responsible for the care and custody of samples from the time of collection to the time of shipment to the laboratories for analysis. A sample is considered under custody if the following conditions are met:

- It is in possession or in view after being in possession
- It was in possession and then secured or sealed to prevent tampering
- It was in possession when placed in a secured area

Each time the custody of samples is turned over to another person, the TR/COC record must be signed off by the former custodian and accepted by the new custodian.

4.4 Chain of Custody Seals

A chain of custody seal is any adhesive label or tape that can be used to seal a sample bottle, container, plastic bag, or shipping cooler such that if it is opened or tampered with, the seal will be broken. The custody seal is used to maintain the chain of custody, as well as guard against possible sample contamination or tampering during shipping.

- ☐ Custody seals must be placed on each shipping cooler or container, and if required by the project's QAPP or FSP, on each sample bottle, container, or bag (as appropriate).
- ☐ The CLP does not provide custody seals. Custody seals should be obtained from either the RSCC or supplied by site personnel.

ED_004144A_00000101-01016

4.5 Sample Labels

A sample label is a sticker that is attached to a sample bottle or container that contains a field sample or quality control (QC) sample.

- Sample labels are affixed to each sample container as samples are collected in the field or affixed prior to going in the field.
- A sample label must contain, at a minimum, the sample number so that the sample can be associated with, and listed on, the associated TR/COC record.
- The sample label should also include the required analysis, CLP Case Number, and preservative used (to eliminate confusion at the laboratory). Samplers should refer to their site-specific project plans for Region-specific sample label requirements.

4.6 Sample Tags

A sample tag identifies a sample bottle or container that contains a sample. The sample tag also provides specific analytical direction and proof that a sample existed. To support the use of sample data in potential enforcement actions, samples can be identified with a sample tag. The CLP Sample Number and Case number must be recorded on a sample tag to indicate that the sample container comprises the whole sample where there is just one container of sample, or part of the indicated sample when there are multiple containers of sample.

Sample tags are not a CLP requirement. Consult with specific RSCC regarding Regional requirement. Not all EPA Regions require the use of sample tags, and field samplers should refer to their site specific project plans or contact their RSCC for Regional sample tag requirements.

4.7 Sample Weight Logs

A sample weight log (Figure 4-1) identifies the tared, sample, and final weights per bottle for samples for volatile organic chemical analysis (VOA). In order to support the Superfund Organic Method (SOM) for VOAs, samplers should enter tared and final weights per bottle in the sample weight log.

ED_004144A_00000101-01017

Page 1 of 2

Sample Weight Log
Chain of Custody Work Sheet

Shipped to: XYZ
Case #9991

Sampled by: ABC

CLP Sample #	A0AA1	A0AA10	A0AA11	A0AA2	A0AA3
Matrix	Soil	Soil	Soil	Soil	Soil
Analyses	CLP Semivolatiles	CLP Semivolatiles	CLP Semivolatiles	CLP Semivolatiles	CLP Semivolatiles
Preservative	None	None	None	None	None
Tag	1003	1004	1005	1006	1007
Tared Weight (g)	27.359	32.02	32.44	30.17	31.11
Final Weight (g)	27.359	37.25	37.53	35.07	31.11
Sample Weight (g)	0	5.23	5.09	4.9	0
COC #	1-082714-170055-0001	1-082714-170055-0001	1-082714-170055-0001	1-082714-170055-0001	1-082714-170055-0001
Remarks					

CLP Sample #	A0AA4	A0AA5	A0AA6	A0AA7	A0AA8
Matrix	Soil	Soil	Soil	Soil	Soil
Analyses	CLP Semivolatiles	CLP Semivolatiles	CLP Semivolatiles	CLP Semivolatiles	CLP Semivolatiles
Preservative	None	None	None	None	None
Tag	1008	1009	1001	1010	1002
Tared Weight (g)	32.234	30.56	31.046	27.119	30.579
Final Weight (g)	32.324	30.56	31.046	27.119	30.579
Sample Weight (g)	0	0	0	0	0
COC #	1-082714-170055-0001	1-082714-170055-0001	1-082714-170055-0001	1-082714-170055-0001	1-082714-170055-0001
Remarks					

Figure 4-1. Scribe Sample Weight Log

This page is intentionally left blank.

ED_004144A_00000101-01019

5.0 THE SCRIBE DOCUMENTATION SOFTWARE TOOL

The U.S. Environmental Protection Agency (EPA) Analytical Services Branch (ASB) requires samplers to use the Scribe software to create documentation for all Contract Laboratory Program (CLP) sampling efforts. EPA recommends that a dedicated member of the sampling team be trained in the Scribe software, and responsible for all uses of Scribe, including the sample labels and the Traffic Report/Chain of Custody (TR/COC) forms at the sampling location. For assistance with obtaining or using the Scribe software, contact Environmental Response Team (ERT) Software Support Help Desk at 800-999-6990 from 9:00 AM - 5:00 PM ET. For additional information regarding Scribe use and training materials, refer to the following Web site: http://www.epaosc.org/Scribe

Scribe allows users to create one or more sampling projects, then enter data and create sample documents for that project. Some of the capabilities of Scribe include:

- Tracking sample numbers and Case numbers
- Associating analysis information to sample numbers
- Creating sample labels and sample tags
- Setting label size and printing labels
- Selecting sample numbers to add to the chain of custody form
- Printing chain of custody forms
- Filtering lists of samples
- Exporting sample data in the following formats: text file (.txt, .csv), spreadsheet (.xls, .wb3), HTML (.htm), XML (.xml), or QuickMap (.kml, .kmz)

The Scribe software tool allows users to track samples electronically. It can be downloaded at no charge from the EPA On Scene Coordinator Web site at http://www.ertsupport.org/downloads.htm.

Need more information?
Use this code to access the ERT User Manual for Scribe CLP Sampling or contact the ERT Software Support Help Desk at 800-999-6990.

5.1 Setting Up the Sampling Event in Scribe

Scribe allows the sampler to enter much of the information prior to the event in order to facilitate processing on the day of the event. The following sections describe how to set up the sampling event in Scribe.

5.1.1 Set Up Project

The first step for setting up Scribe is to set up the project as follows:

- ☐ Access the Scribe **New Project Wizard** to set up the sampling project.
- ☐ Enter the project **Site Name**, **Site #**, and **Region #** (required).
- ☐ Additional project information may be entered, if available.

ED_004144A_00000101-01020

5.1.2 Verify/Create Analysis Types

The analysis types to be used for the sampling event must be defined for the project. Refer to the site sampling plan to determine which analyses are to be used.

- ☐ Use the **Analyses** tab to display a list of all analysis types available.
- ☐ Only analyses with the Program Type of "CLP," such as "CLP ICP-AES Metals," or "CLP Semivolatiles" should be used.
- ☐ If the required analysis type is missing, it can be added manually using the **Add** button.

5.1.3 Set Default Sample Tag Information

Set up the default values for sample number and tag. This allows the sampler to increment sample and tag numbers, rather than hand entering each one.

- ☐ Select **File→Options→CLP/Tag Settings** to display the **CLP/Tag Settings** window.
- ☐ Enter the new default values and click **OK**.

Sample tags are not a CLP requirement. Please consult with specific Regional Sample Control Coordinator (RSCC) as to Regional requirement. Not all EPA Regions require the use of sample tags, and field samplers should refer to their site specific project plans or contact their RSCC for Regional sample tag requirements.

5.1.4 Indicate Modified Analysis (MA) on Scribe COC Records

When completing a TR/COC record in Scribe, indicate an MA as follows:

- ☐ Identify any samples that will be analyzed using a CLP MA by creating a new analysis within the Scribe Analyses table or at the time of entering the Analyses for the sample.
- ☐ The MA analysis should contain the Modification Reference Number within the name assigned to the analysis. For example, if a Region submits an MA for an additional analyte, and SMO assigns the Modification Reference Number 1301.0, the Scribe Analyses could be named "CLP VOA by M.A. 1301.0." The associated abbreviation for this analysis could be "VOA M.A."

Need more information?
Use this code to access the ERT User Manual for Scribe CLP Sampling or contact the ERT Software Support Help Desk at 800-999-6990.

5.1.5 Using Scribe for Mixed-matrix Samples

The Scribe **LinkSampleNo** field links the original sample to the split samples and numbers. Use Scribe to link to the two sample IDs used for the different sample phases as follows:

- ☐ Add two (2) additional samples in Scribe indicating in the matrix field which one is the liquid/aqueous phase and which one is the solid phase (i.e., ABC124 and ABC125).
- ☐ Tie the two additional samples to the original sample number using the 'LinkSampleNo' field.
  - **In Scribe**, in the **Samples** tab, click the **View** button; the **Select Columns** drop-down menu displays. Put a checkmark next to **LinkSampleNo** to make that column visible.
  - Add the 'parent' or the original field sample # in the **LinkSampleNo column** (i.e., ABC123).
  - **On the COC**, indicate in the **Special Instructions** which of the two new sample numbers the laboratory is to use for the liquid/aqueous phase and which sample number to be used for the solid phase.

ED_004144A_00000101-01021

5.2 Scribe CLP Analysis Codes

The following table lists the analysis codes used for CLP samples in Scribe.

Table 5-1. Scribe CLP Analysis Codes

Analysis Name	Abbreviation
Aroclors	
CLP Aroclors	ARO
High Resolution	
CLP 12 Toxic Congeners	12 Toxic CBCs
CLP 209 Congeners	209 CBCs
CLP Dioxins/Furans	CDD/CDF
Inorganics	
CLP Aluminum	Al
CLP Antimony	Sb
CLP Arsenic	As
CLP Barium	Ba
CLP Beryllium	Be
CLP Cadmium	Cd
CLP Calcium	Ca
CLP Chromium	Cr
CLP Cobalt	Co
CLP Copper	Cu
CLP Cyanide	CN
CLP Hardness	Hardness
CLP ICP-AES Metals	ICP-AES
CLP ICP-MS Metals	ICP/MS
CLP Iron	Fe
CLP Lead	Pb
CLP Magnesium	Mg
CLP Manganese	Mn
CLP Mercury	Hg
CLP Nickel	Ni
CLP Potassium	K
CLP Selenium	Se
CLP Silver	Ag
CLP Sodium	Na
CLP SPLP Alumium	SPLP Al
CLP SPLP Antimony	SPLP Sb
CLP SPLP Aroclors	SPLP ARO
CLP SPLP Arsenic	SPLP As
CLP SPLP Barium	SPLP Ba
CLP SPLP Beryllium	SPLP Be
CLP SPLP Cadmium	SPLP Cd
CLP SPLP Calcium	SPLP Ca

ED_004144A_00000101-01022

Analysis Name	Abbreviation
CLP SPLP Chromium	SPLP Cr
CLP SPLP Cobalt	SPLP Co
CLP SPLP Copper	SPLP Cu
CLP SPLP Cyanide	SPLP CN
CLP SPLP ICP-AES Metals	SPLP ICP-AES
CLP SPLP Iron	SPLP Fe
CLP SPLP Lead	SPLP Pb
CLP SPLP Magnesium	SPLP Mg
CLP SPLP Manganese	SPLP Mn
CLP SPLP Mercury	SPLP Hg
CLP SPLP Nickel	SPLP Ni
CLP SPLP Potasium	SPLP K
CLP SPLP Selenium	SPLP Se
CLP SPLP Silver	SPLP Ag
CLP SPLP Sodium	SPLP Na
CLP SPLP Thalium	SPLP Tl
CLP SPLP Vanadium	SPLP V
CLP SPLP Zinc	SPLP Zn
CLP TCLP Arsenic	TCLP As
CLP TCLP Barium	TCLP Ba
CLP TCLP Cadmium	TCLP Cd
CLP TCLP Chromium	TCLP Cr
CLP TCLP ICP-AES Metals	TCLP ICP-AES
CLP TCLP Lead	TCLP Pb
CLP TCLP Mercury	TCLP Hg
CLP TCLP Selenium	TCLP Se
CLP TCLP Silver	TCLP Ag
CLP Thallium	Tl
CLP Vanadium	V
CLP Zinc	Zn
Organics	
CLP PAH+PCP	PAH
CLP PAH+PCP by SIM	PAH SIM
CLP Semivolatiles	SVOA
CLP SPLP Semivolatiles	SPLP SVOA
CLP SPLP Volatiles	SPLP VOA
CLP TCLP Semivolatiles	TCLP SVOA
CLP TCLP Volatiles	TCLP VOA
CLP Trace Volatiles	TVOA
CLP Volatiles	VOA
Pesticides	
CLP Pesticides	PEST
CLP SPLP Pesticides	SPLP PEST

ED_004144A_00000101-01023

To avoid issues with interpretation, ensure that Total Metals and Dissolved Metals are labeled correctly.

ED_004144A_00000101-01024

This page is intentionally left blank.

ED_004144A_00000101-01025

6.0 CLP SAMPLE CONTAINERS

The analytical protocol(s) to be used for sample analysis often requires the use of a particular type of sample container. The type of container also may depend on the sample matrix and analysis.

It is recommended that samplers use borosilicate glass containers, which are inert to most materials, when sampling for pesticides and/or other organics. Conventional polyethylene is recommended when sampling for metals because of the lower cost and absorption rate of metal ions.

Have extra containers readily available for each sampling event in case of breakage, loss, or contamination.

Containers procured for a sampling event are usually pre-cleaned and shipped ready for use from the manufacturer to the sampling site. Regardless of the type of container used, samplers must ensure that the containers have been analyzed or certified clean to levels below concern for the project (certificates must be kept on record). These containers must meet the U.S. Environmental Protection Agency (EPA) container type specifications listed in Table 6-1.

Samplers should document the lot numbers for every lot of cleaned containers used for each project and maintain corresponding certificates of analysis on file and available upon request.

Table 6-1. Sample Container Type Specifications

Reference Number	Container Type	Specifications	
		Closure	Septum
1	40 mL amber glass vial, 24 mm neck finish.	Polypropylene or phenolic, open-top screw-cap, 15 cm opening, 24-400 size.	24 mm disc of 0.005 in. Polytetrafluoroethylene (PTFE) bonded to 0.120 in. silicone for a total thickness of 0.125 in.
2	1 L high density polyethylene, cylinder-round bottle, 28 mm neck finish.	Polyethylene cap, ribbed, 28-410 size; F217 polyethylene liner.	N/A
3	8 oz short, wide mouth, straight-sided, glass jar, 70 mm neck finish.	Polypropylene or phenolic cap, 70-400 size; 0.015 in. PTFE liner.	N/A
4	4 oz (120 mL) tall, wide mouth, straight-sided, glass jar, 48 mm neck finish.	Polypropylene or phenolic cap, 48-400 size; 0.015 in. PTFE liner.	N/A
5	1 L amber round glass bottle, 33 mm pour-out neck finish.	Polypropylene or phenolic cap, 33-430 size; 0.015 in. PTFE liner.	N/A
6	Coring tool used as a transport device (e.g., 5 g Sampler).	Has built-in closing mechanism.	N/A
7	1 qt polymer zip-top bag	Has built-in closing mechanism.	N/A
8	Heavy duty aluminum foil	N/A	N/A

ED_004144A_00000101-01026

The information contained in this table is also cross-referenced in the sample collection parameters discussed in Appendix C. The container Reference Numbers are used in Tables C-1 to C-4 under the Container Type column. For example, samples collected for low-level soil VOA analysis may require the sampler to use pre-prepared, tared closed-system purge-and-trap vials with a preservative (refer to Appendix B). Refer to the Regional Quality Assurance Project Plan (QAPP) and Appendix D for additional references. Refer to Table B-2 for a cross reference between the analyses and the required sample container types.

ED_004144A_00000101-01027

7.0 CLP SAMPLE COLLECTION

Samplers should determine the types of samples or aliquots to be taken, the volumes required of each sample or aliquot, and the preservation requirements for each sample by referring to the Site Project Plan (SPP) and Contract Laboratory Program (CLP) sample requirements table in Appendix C. The following sections describe the types of samples that may be required to be collected.

7.1 Requesting the Scheduling of the Laboratory

The sampler must request that the Regional Sample Control Coordinator (RSCC) schedule the laboratory to be used for the analysis. This should be done as far in advance of the sampling event as possible.

- The sampler should specify the number of samples, analyses, etc., being shipped each week.
- When scheduling a sampling event that will last for more than one week, it is recommended that the sampler contact the RSCC (or designee) on a weekly basis to provide updates. This contact between the sampler, the RSCC (or designee), and Sample Management Office (SMO) is very important because it will ensure better availability of laboratory capacity.
- In the event that time frame or number of samples for a sampling event changes, the RSCC and SMO should be notified as soon as possible to maintain capacity at the CLP laboratory.

The CLP has the capability to schedule sampling on an emergency basis; however, the sampler must contact the RSCC (or designee) to obtain details regarding how to handle such a situation.

7.2 Preparing for the Shipping of Samples

Once the samples are collected, they will be shipped to the CLP laboratory for analysis. Samplers must have the necessary shipping supplies on site.

7.2.1 Procure Shipping Supplies

Samplers should refer to the appropriate project plans to determine the types of samples that will be taken during the sampling project to determine the necessary packaging materials to have at the site for all pertinent sample container types and sample matrices.

Samplers should also make sure to obtain the appropriate shipping paperwork (e.g., shipping forms required by the delivery service).

The CLP strongly discourages the use of vermiculite and cat litter as sources for packing material. These materials interfere with labeling and documentation and are difficult to remove from sample containers and shipping containers.

ED_004144A_00000101-01028

7.2.2 Laboratory Assignment Notification

The Laboratory Assignment Notification informs the sampler of the CLP laboratory(ies) that will be receiving the samples. Prior to beginning fieldwork, samplers should contact their RSCC (or designee) to obtain their Laboratory Assignment Notification(s), or they may be provided by SMO.

The Laboratory Assignment Notification applies only to work being performed under the CLP Statements of Work (SOWs).

7.2.3 Verify Laboratory Shipping Information

Samplers should make sure to have accurate laboratory contact information, including the following:

- Laboratory name
- Laboratory address
- Contact name
- Laboratory phone number

This information, which is provided on the Regional Laboratory Assignment Notification Form, is used for both Traffic Report (TR)/Chain of Custody (COC) records and shipping paperwork such as address labels and airbills. This form may be provided by SMO, or can be obtained through the RSCC prior to sampling.

7.2.4 Obtain Shipping Company Information

Samplers should also make sure to have accurate shipping company information, including the following:

- Company name
- Telephone number
- Account number
- Pickup schedule

Additional guidance will be provided by the U. S. Environmental Protection Agency (EPA) if samples are to be shipped internationally.

7.2.5 Prepare Sample Cooler Return Documentation

CLP laboratories must routinely return sample shipping coolers to the appropriate sampling office within 14 calendar days following receipt of shipment from the sampler. For sample coolers to be returned, the sampler must complete the appropriate cooler documentation and work with Regions and government agencies to provide a cost-effective mechanism for laboratories to return the empty coolers to the appropriate sampling office. The sampling cooler return documentation should be prepared in advance and provided to samplers before field activities begin.

The sampler (not the CLP laboratory) is responsible for paying for the disposition (return or disposal) of the cooler and should also include shipping airbills bearing the sampler's account number, as well as a return address, to allow for cooler return.

ED_004144A_00000101-01029

To maintain consistency among cooler transportation programs, samplers should do the following:

- ☐ Minimize the use of multiple transportation carriers to avoid confusion.
- ☐ Use multiple-copy labels so the laboratory and the sampling team can each retain a copy for their records.
- ☐ Prepare labels in advance so that the laboratory can simply affix a completed shipping label on the cooler.
- ☐ Include third-party billing information (i.e., their shipping account number) on labels so the laboratory will not be billed by the transportation carrier.
- ☐ Confirm that the laboratory knows which transportation carrier to use.
- ☐ Include the SMO-assigned CLP Case Number on return information.

7.3 Collecting Samples

The CLP requirements for samples are defined by the applicable CLP Statement of Work (SOW), and outlined in the following tables/tables in Appendix C. This includes CLP submission requirements such as sample volumes, preservation, and holding times.

Observe the sample collection requirements for the following SOWs when collecting analytical samples:

- Organic (SOM02.X) – Tables C-1 and C-2
- Inorganic (ISM02.X) – Table C-3
- High Resolution (Dioxin/Furan and CBCs (HRSM01.X) – Table C-4

For an explanation of the various sample types and the requirements for collecting and submitting each particular type, refer to Table 7-1.

Table 7-1. Sample Types and CLP Submission Requirements

Sample Type	Purpose	Collection[1]	CLP Sample Number
Field Sample	To analyze for target compounds of interest	Collect from areas that are known or suspected to be contaminated. Collect at the frequency specified in the Quality Assurance Project Plan (QAPP) and Sampling Plan.	Assign CLP Sample Numbers to the sample.
Field Duplicate	To check reproducibility of laboratory and field procedures To indicate non-homogeneity	Collect from areas that are known or suspected to be contaminated. Collect at the frequency specified in the QAPP and Sampling Plan.	Assign two separate (unique) CLP Sample Numbers (i.e., one number to the field sample and one to the duplicate). Submit blind to the laboratory.
Field Blank	To check cross-contamination during sample collection, preservation, and shipment, as well as in the laboratory Also to check sample containers and preservatives	Collect for each group of samples of similar matrix with the frequency specified in the QAPP and Sampling Plan. Organics - Use water (demonstrated to be free of the contaminants of concern). Inorganics - Use metal-free (deionized or distilled) water or a single clean wipe.	Assign separate CLP Sample Numbers to the field blanks.
Filter Blank	To check contamination of samples from filtering procedure	Collect when water samples are filtered by filtering blank water using the same procedure and filtering equipment that is used for samples. Use blank water (water	Assign separate CLP Sample Numbers to the filter blanks.

ED_004144A_00000101-01030

Sample Type	Purpose	Collection[1]	CLP Sample Number
		demonstrated to be organic-free, deionized or distilled for inorganics) and collect into sample containers.	
Temperature Blank	To provide an accurate measurement of field sample temperature upon arrival to the laboratory Also to establish whether the temperature range has been maintained while in transit	Collect for each shipping container with the frequency specified in the QAPP and Sampling Plan.	Ship together with samples from the field to the laboratory. A CLP Sample Number is not required.
Trip Blank [Volatile Organic Analysis (VOA) Only]	To check contamination of VOA samples during handling, storage, and shipment from field to laboratory	Prior to going into the field, prepare and seal one trip blank sample per shipment per matrix. Trip blanks should be matched with respect to matrix and volume of the preservatives used. Prepare trip blank samples with the same laboratory grade methanol and sodium bisulfate solution or reagent water used for field sampling. Carry each through the same sampling and handling protocols used for field samples. Aqueous trip blank samples should be prepared using water demonstrated to be free of the contaminants of concern (deionized water is appropriate). Place one trip blank sample for each matrix in each cooler used to ship VOA samples.	Assign separate CLP Sample Numbers to the trip blanks.
Equipment Blank or Rinsate Blank	To check field decontamination procedures	Collect when sampling equipment is decontaminated and reused in the field or when a sample collection vessel (bailer or beaker) will be used. Use blank water (water demonstrated to be organic-free, deionized or distilled for inorganics) and rinse water into the sample containers.	Assign separate CLP Sample Numbers to the equipment blanks/rinsate.
Matrix Spike (MS) and Matrix Spike Duplicate (MSD) (Organic Analysis Only)	To check accuracy and precision of organic analyses in specific sample matrices	Collect from areas that are known or suspected to be contaminated. For smaller sampling events (i.e., 20 samples or less), MS/MSD additional volume should be collected in the first round of sampling and included in the first shipment of samples to the laboratory. Collect five additional vials for aqueous samples and five additional field core containers for soil VOA samples designated for MS/MSD analyses. An aqueous sample for Semivolatile Organic Analysis (SVOA) analysis would require the field sampler to collect at least 2 L of field samples and at least 2 L each for the MS and MSD samples for a total volume of 6 L. If Pesticide or Aroclor MS/MSD analyses are required for the same sample, an additional 6 L must be collected for each analysis method. Collect double volume for soil samples for MS/MSD.	Assign the same CLP Sample Number to the field sample and the extra volume for MS/MSD. Identify the sample designated for MS/MSD on the TR/COC record.

ED_004144A_00000101-01031

Sample Type	Purpose	Collection[1]	CLP Sample Number
		See Table C-2 and Appendix E for VOA collection volumes.	
Matrix Spike (MS) and Duplicate (Inorganic Analysis Only)	To check accuracy and precision of inorganic analyses in specific sample matrices	Collect from areas that are known or suspected to be contaminated. For smaller sampling events (i.e., 20 samples or less), Matrix Spike and Duplicates should be collected in the first round of sampling and included in the first shipment of samples to the laboratory. Additional sample volume may be required for inorganic analysis.[2]	Assign the same CLP Sample Number to the field sample and extra volume (if collected). Identify the sample(s) designated for Matrix Spike and Duplicates on the TR/COC record.
Performance Evaluation (PE) Samples	Specially-prepared Quality Control (QC) samples used to evaluate a laboratory's analytical proficiency	The PE samples contain analytes with concentrations unknown to the laboratory. Designated Regional or authorized personnel (depending on Regional policy) arrange for Case-specific CLP PE samples to be prepared and shipped by the Quality Assurance Technical Support (QATS) contractor. The PE samples can be shipped to the site, or shipped per Regional direction. QATS provides the appropriate preparation instructions and chain of custody materials.	Samplers must order PE samples and ship them to the laboratory if required by the Region.

[1] Consult Regional or Project Manager Guidance for field QC sample frequencies; laboratory QC sample frequencies are generally fixed in the laboratory subcontracts or specified in analytical methods.

[2] Double volume should be sent for inorganic aqueous MS and Duplicate samples to allow for sufficient volume for these analyses in the event that sample volume is lost as a result of samples breaking, leaking, re-extraction/redigestion, reanalysis, or laboratory accidents. Additional soil volume is not necessary for inorganic samples.

7.3.1 Field QC Samples

Field QC samples are designed to assess variability of the media being sampled and to detect contamination and sampling errors in the field. The types of field QC samples that are generally collected include the following:

- Field duplicates
- Field blanks (such as equipment, trip, or rinse blanks)

Unless otherwise instructed, field duplicate samples should remain "blind" to the laboratory (i.e., they should have separate CLP Sample Numbers).

7.3.2 Laboratory QC Samples

A laboratory QC sample is an additional analysis of a field sample, as required by the laboratory's contract. There are three types of laboratory QC samples:

- MS (for organic and inorganic samples)
- MSD (for organic samples only)
- Duplicates (for inorganic samples only)

Observe the following guidelines for collecting laboratory QC samples:

- ☐ Follow Regional guidance regarding the collection of laboratory QC samples.
- ☐ Wipes samples do not require laboratory QC samples.
- ☐ When laboratory QC is scheduled for CLP analytical work, laboratories expect one designated laboratory QC sample per Sample Delivery Group (SDG), which closes when 20 samples or more than one week is reached, whichever occurs first.
- ☐ Samplers should **select one sample per matrix per 20 samples** as a laboratory QC sample.

ED_004144A_00000101-01032

- ☐ Designated laboratory QC samples should be noted on the TR/COC record; the sample(s) designated for laboratory QC should be noted in "Sample Type" column.
- ☐ QC samples should be sent in the same cooler as the field samples when possible.

Field QC samples should not be designated as laboratory QC samples.

In the event of multiple sample shipments during a sampling event, it is recommended that the sampler submit laboratory QC samples in the first sample shipment, and as necessary in subsequent shipments to meet laboratory contract requirements.

7.4 Recording Samples

Samplers must use Scribe to record the samples that are collected. To record the samples:

- ☐ Access the Scribe **Sampling** tab to select the type of sampling (Air Sampling, Water Sampling, Soil/Sediment Sampling, Water Sampling).
- ☐ Enter the detailed information for the sample.
- ☐ When all information has been entered, click the **Close** button at the bottom of the page to save the entries and close the window.

Refer to Table 5-1 when referencing the CLP analysis codes.

Need more information?
Use this code to access the ERT User Manual for Scribe CLP Sampling or contact the ERT Software Support Help Desk at 800-999-6990.

For assistance while using the Scribe software, contact the ERT Software Support Help Desk at 800-999-6990 from 9:00 AM - 5:00 PM ET. Refer to the following Web site for information on the use and training of Scribe: http://www.epaosc.org/Scribe.

7.4.1 Hardcopy Recording

In the event the Scribe is unavailable, samplers must have backup hardcopy Scribe TR/COC records. For information regarding emergency backup procedures, refer to the following Web site: http://www.epa.gov/superfund/programs/clp/trcoc.htm. This should be done only in cases of power/equipment failure, and not as a matter of routine during a sampling event.

7.5 Meeting Volume, Preservation, and Holding Time Requirements

Samplers should refer to their project plans to obtain the specific sample volumes to be collected, the preservation needed for those samples, and the technical holding times under which they must submit samples to the scheduled CLP laboratory. Sample collection parameters (including sample volumes, preservatives, and technical holding times) are listed in Tables C-1 through C-4.

7.5.1 Collect Required Sample Volumes

Ensure that a sufficient volume is collected for each sample. If the sample volume does not meet the requirement set by the project plan, the laboratory may not be able to analyze the sample correctly.

ED_004144A_00000101-01033

Refer to Appendix E for information regarding the collection of VOAs in water. When sampling for VOAs in soils, samplers must use SW-846 Method 5035A guidelines included in Appendix D.

If a modified analysis requesting tissue samples requires processing or homogenizing, it should be performed at a sample processing facility under clean room conditions to reduce potential contamination. Tissue samples should be packed and cooled on ice immediately. Tissue samples should never be sent on Friday for Monday delivery.

7.5.2 Preserve Samples

Without preservation, some samples (e.g., VOAs) may degrade to the point that they will not provide an accurate analysis. The sampler must chemically preserve some water samples for certain analytes before shipping them to the laboratory.

Observe the following regarding preservation of samples:

- ☐ Note any visible reaction between the sample and added chemical preservative in the field record.
- ☐ Preserve and immediately cool all organic and cyanide water samples to ≤6°C, but not frozen, upon collection.
- ☐ Keep samples cooled until the time of analysis (do not freeze water samples).
- ☐ Preservation techniques vary among Regions, so the sampler should obtain Region-specific instructions and review the appropriate project plans and Standard Operating Procedures (SOPs).
- ☐ Refer to Appendix E for information regarding the collection of VOA water samples.

7.5.3 Ship Samples within Holding Times

There are two types of holding times: technical and contractual.

- **Technical holding time** is the maximum time allowed between a sample collection and the completion of the sample extraction and/or analysis.
- **Contractual holding time** is the maximum length of time that the CLP laboratory can hold the sample prior to extraction and/or analysis. The contractual holding time is the elapsed time expressed in days from the date of receipt of the sample by the laboratory until the date of its extraction and/or analysis, as described in the appropriate CLP Statement of Work.

Contractual holding times are generally set to be two days less than the technical holding times to allow for sample packing and shipping.

Samplers should ship samples to scheduled CLP laboratories as soon as possible after collection.

- ☐ Ship samples daily to CLP laboratories whenever possible.
- ☐ If samples cannot be shipped on a daily basis, they must be properly preserved and maintained to meet CLP-specified temperatures, holding times, and custody requirements.
- ☐ Uploading the electronic COC is mandatory and should be done as soon as possible after shipping.

If samplers are shipping samples after 5:00 PM ET, they must notify the RSCC (or designee) and SMO by 8:00 AM ET on the following business day. When making a Saturday delivery, samplers must notify the RSCC (or designee) and SMO as soon as possible so that SMO will receive the delivery information by 3:00 PM ET on the Friday prior to delivery.

ED_004144A_00000101-01034

7.6 Completing the Documentation

The sample documentation required is defined by the project plan. It is highly recommended that samplers provide documentation, even if the Region does not require it.

In general, samplers must complete the following documentation for the samples collected:

- CLP Sample Number (on the sample container or bottle)
- Sample label
- Chain of custody seals (as appropriate)
- TR/COC record
- Field operations records (as necessary)

Under no circumstances should the site name appear on any documentation being sent to the laboratory, unless the laboratory is a Regional EPA laboratory. The Region copy of the TR/COC record shall be sent to the EPA laboratory.

An example of a packaged sample is shown in Figure 7-1.

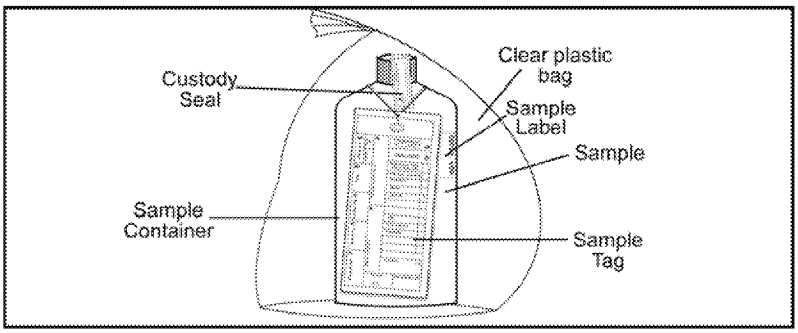

Figure 7-1. Packaged Sample with Identification and Chain of Custody Documentation (Excluding TR/COC Record)

7.6.1 Record and Label the Samples

The sample labels created in Scribe must be affixed to each sample container. A sample label contains the following information:

- Associated CLP Sample Number (either written or pre-printed)
- SMO-assigned CLP Case Number
- Preservative used
- Analysis
- Additional information such as the location or the date/time of collection

Record and label the samples collected as follows:

- ☐ Using Scribe, select the **Sampling** tab to select the type of matrix (e.g., Soil/Sediment, Water Sampling).
- ☐ Enter the Scribe **Sample Details** page to enter the analysis method, CLP Sample Number, and SMO-assigned CLP Case Number for each sample.
- ☐ Enter samples requested as a modified analysis (MA) by using the MA analysis previously created in Scribe. If the MA does not exist, refer to Section 5.1.2, Verify/Create Analysis Types to create the analysis type for the MA.
- ☐ Print two copies of the sample label and attach one to the sample container or bottle, and place the other on the sample tag that may be attached to the sample container or bottle.

ED_004144A_00000101-01035

- ☐ If handwriting a sample label, complete the label information using waterproof ink, place the label on the outside of the sample bottle or container, then cover the label with clear packaging tape to protect the label and maintain legibility.
- ☐ Avoid wrinkles in the tape and labels.
- ☐ Refer to Figure 7-1 to see how the sample labels are used.

If special conditions exist, use the following guidelines:

- ☐ **Water samples collected for total metal and filtered metal analyses from the same sampling location** - these samples must be assigned separate (unique) CLP Sample Numbers.
- ☐ **Tared VOA sample vials** - do not attach labels to tared VOA sample vials.

7.6.2 Complete the COC Records in Scribe

Complete the Scribe COC Record as follows:

Access the Scribe COC Page

- ☐ Select the **Chain of Custody** link under the **Sample Management** header. The ***Chain of Custody*** page displays.

Create the COC Record

- ☐ Click the **Add a Chain of Custody** button at the bottom of the page. The ***COC Details*** pop-up window displays.
- ☐ Enter the information for the COC, including selecting the **CLP format** (Inorganic, Organic, or High Resolution).

  Note: It is very important that the correct **COC Format** is selected when the COC Record is created. The user must choose the CLP format for the type of samples being submitted, as shown in Figure 7-2.

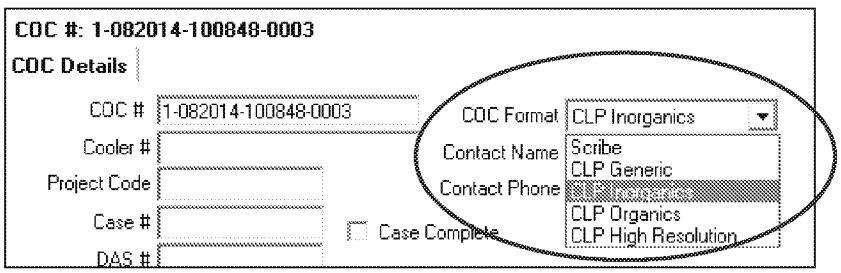

Figure 7-2. COC Details Pop-up Window

- ☐ Ensure that the **Case #** is also filled in. (If it was entered in the CLP/Tag Settings, it will automatically be filled in.)

Assign Samples to the COC Record

- ☐ Assign samples to the **COC Record** (it will filter based on selected COC format SOW).
- ☐ Ensure that all sample information has been entered.
- ☐ Enter any additional information, such as sampler name, matrix, and preservation.
- ☐ Indicate any samples that will be analyzed using a MA.
- ☐ Scribe generates a laboratory and a Regional copy of the Chain of Custody Record (see Figures 7-3 through 7-4).

Print the COC Record

- ☐ Print the **COC Record** by selecting either the **Lab Copy** or **Region Copy**. There will be a QC check; ensure that all information is filled in.
- ☐ Print as many copies of the **COC Record** as is necessary.

ED_004144A_00000101-01036

- ☐ Sign and submit original copies of the **COC Record**.

Certain information will not appear on the electronic COC record (e.g., matrix and preservative descriptions).

Sampler information, etc., is not added when creating the COC; it is added when editing the sample itself.

Need more information?
Use this code to access the ERT User Manual for Scribe CLP Sampling or contact the ERT Software Support Help Desk at 800-999-6990.

7.6.3 Making Manual Edits to Printed Scribe COC Records

If a Scribe COC Record has been printed and deletions or edits need to be made by the sampler, the following procedures must be followed:

- ☐ If making a deletion, correct the deletion in Scribe and reprint the COC record. Discard the original.
- ☐ If making an addition, enter the new information in Scribe and reprint the COC record. Discard the original.
- ☐ If corrections occur after shipment, adhere to Region-specific procedures and guidelines on handling hard copy COC records.

ED_004144A_00000101-01037

Page 1 of 1

USEPA CLP COC (LAB COPY)
DateShipped: 1/3/2014
CarrierName: FedEx
AirbillNo: ABC12345

CHAIN OF CUSTODY RECORD
Case #: 21490
Cooler #:

No: 2-010614-124708-0001
Lab: EPA Labs
Lab Contact: John Smith
Lab Phone:

Sample Identifier	CLP Sample No.	Matrix/Sampler	Coll. Method	Analysis/Turnaround (Days)	Tag/Preservative/Bottles	Location	Collection Date/Time	For Lab Use Only
12345-0001	B0AA0	Soil/ EPA	Grab	SVOA(21)/PR, SVOA 1723.3(21)/PR, PEST(21), ARO(21), VOA(21), VOA MA(21)	1000 (0 C), 1001 (0 C), 1002 (0 C), 1003 (0 C), 1004 (0 C), 1005 (0 C) (6)	ABC	01/03/2014 08:00	
12345-0002	B0AA1	Soil/ EPA	Grab	ARO(21), PEST(21), SVOA(21)	1006 (0 C), 1007 (0 C), 1008 (0 C), 1009 (0 C) (4)	ABC	01/03/2014 08:00	
12345-0003	B0AA2	Soil/ EPA	Grab	ARO(21), PEST(21), SVOA(21)	1010 (0 C), 1011 (0 C), 1012 (0 C), 1013 (0 C) (4)	DEF	01/03/2014 09:00	
12345-0004	B0AA3	Soil/ EPA	Grab	ARO(21), PEST(21), SVOA(21)	1014 (0 C), 1015 (0 C), 1016 (0 C), 1017 (0 C) (4)	GHI	01/03/2014 10:00	
12345-0005	B0AA4	Soil/ EPA	Grab	ARO(21), PEST(21), SVOA(21)	1018 (0 C), 1019 (0 C), 1020 (0 C), 1021 (0 C) (4)	JKL	01/03/2014 11:00	
12345-0006	B0AA5	Soil/ EPA	Grab	SVOA(21), SVOA 1723.3(21), PEST(21), ARO(21), VOA MA(21)	1022 (0 C), 1023 (0 C), 1024 (0 C), 1025 (0 C), 1026 (0 C), 1027 (0 C) (6)	DEF	01/03/2014 09:00	
12345-0007	B0AA6	Soil/ EPA	Grab	SVOA(21), SVOA 1723.3(21), PEST(21), ARO(21), VOA MA(21)	1028 (0 C), 1029 (0 C), 1030 (0 C), 1031 (0 C), 1032 (0 C), 1033 (0 C) (6)	GHI	01/03/2014 10:00	
12345-0008	B0AA7	Soil/ EPA	Grab	ARO(21), PEST(21), SVOA(21)	1034 (0 C), 1035 (0 C), 1036 (0 C), 1037 (0 C) (4)	JKL	01/03/2014 11:00	

Sample(s) to be used for Lab QC: 12345-0001 Tag 1000, 12345-0001 Tag 1001, 12345-0001 Tag 1002, 12345-0001 Tag 1003, 12345-0001 Tag 1004, 12345-0001 Tag 1005	Shipment for Case Complete? Y Samples Transferred From Chain of Custody #
Analysis Key: SVOA=CLP Semivolatiles, SVOA 1723.3=CLP SVOA MA 1723.3, PEST=CLP Pesticides, ARO=CLP Aroclors, VOA=CLP Volatiles, VOA MA=CLP VOA (MA 1722.4)	

Items/Reason	Relinquished by (Signature and Organization)	Date/Time	Received by (Signature and Organization)	Date/Time	Sample Condition Upon Receipt

Figure 7-3. Scribe Chain of Custody Record (Laboratory Copy)

ED_004144A_00000101-01038

Page 1 of 1

USEPA CLP COC (REGION COPY)
DateShipped: 1/3/2014
CarrierName: FedEx
AirbillNo: ABC12345

CHAIN OF CUSTODY RECORD
Field Sampler's Guide
Case #: 21490
Cooler #:

No: 2-010614-124708-0001
Lab: EPA Labs
Lab Contact: John Smith
Lab Phone:

Sample Identifier	CLP Sample No.	Matrix/Sampler	Coll. Method	Analysis/Turnaround (Days)	Tag/Preservative/Bottles	Location	Collection Date/Time	Sample Type
12345-0001	B0AA0	Soil/ EPA	Grab	SVOA(21)/PR, SVOA 1723.3(21)/PR, PEST(21), ARO(21), VOA(21), VOA MA(21)	1000 (0 C), 1001 (0 C), 1002 (0 C), 1003 (0 C), 1004 (0 C), 1005 (0 C) (6)	ABC	01/03/2014 08:00	Lab QC
12345-0002	B0AA1	Soil/ EPA	Grab	ARO(21), PEST(21), SVOA(21)	1006 (0 C), 1007 (0 C), 1008 (0 C), 1009 (0 C) (4)	ABC	01/03/2014 08:00	Field Sample
12345-0003	B0AA2	Soil/ EPA	Grab	ARO(21), PEST(21), SVOA(21)	1010 (0 C), 1011 (0 C), 1012 (0 C), 1013 (0 C) (4)	DEF	01/03/2014 09:00	Field Sample
12345-0004	B0AA3	Soil/ EPA	Grab	ARO(21), PEST(21), SVOA(21)	1014 (0 C), 1015 (0 C), 1016 (0 C), 1017 (0 C) (4)	GHI	01/03/2014 10:00	Field Sample
12345-0005	B0AA4	Soil/ EPA	Grab	ARO(21), PEST(21), SVOA(21)	1018 (0 C), 1019 (0 C), 1020 (0 C), 1021 (0 C) (4)	JKL	01/03/2014 11:00	Field Sample
12345-0006	B0AA5	Soil/ EPA	Grab	SVOA(21), SVOA 1723.3(21), PEST(21), ARO(21), VOA MA(21)	1022 (0 C), 1023 (0 C), 1024 (0 C), 1025 (0 C), 1026 (0 C), 1027 (0 C) (6)	DEF	01/03/2014 09:00	Field Sample
12345-0007	B0AA6	Soil/ EPA	Grab	SVOA(21), SVOA 1723.3(21), PEST(21), ARO(21), VOA MA(21)	1028 (0 C), 1029 (0 C), 1030 (0 C), 1031 (0 C), 1032 (0 C), 1033 (0 C) (6)	GHI	01/03/2014 10:00	Field Sample
12345-0008	B0AA7	Soil/ EPA	Grab	ARO(21), PEST(21), SVOA(21)	1034 (0 C), 1035 (0 C), 1036 (0 C), 1037 (0 C) (4)	JKL	01/03/2014 11:00	Field Sample

Sample(s) to be used for Lab QC: 12345-0001 Tag 1000, 12345-0001 Tag 1001, 12345-0001 Tag 1002, 12345-0001 Tag 1003, 12345-0001 Tag 1004, 12345-0001 Tag 1005	Shipment for Case Complete? Y Samples Transferred From Chain of Custody #
Analysis Key: SVOA=CLP SemiVolatiles, SVOA 1723.3=CLP SVOA MA 1723.3, PEST=CLP Pesticides, ARO=CLP Aroclors, VOA=CLP Volatiles, VOA MA=CLP VOA (MA 1722.4)	

Items/Reason	Relinquished by (Signature and Organization)	Date/Time	Received by (Signature and Organization)	Date/Time	Sample Condition Upon Receipt

Figure 7-4. Scribe Chain of Custody Record (Region Copy)

ED_004144A_00000101-01039

7.6.4 Complete and Attach Custody Seals

Custody seals are usually pre-printed stickers that are signed (or initialed) and dated by the sampler after sample collection and placed on sample bottles or containers and/or shipping containers (see Figure 7-5).

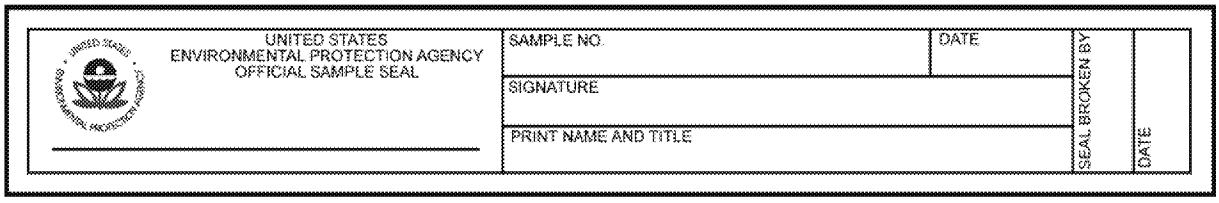

Figure 7-5. Custody Seal

The custody seal documents the person who sealed the sample container and verifies that the sample has not been tampered with. Custody seals can also be used to maintain custody of other items such as envelopes.

The use and type of custody seals can vary by Region or collecting organization. Samplers should obtain the appropriate custody seals and specific instructions for correctly attaching them from the RSCC. Note that some Regions require the sampling team to provide their own custody seals.

- ☐ Place the seals such that they will break if the sample bottle or container, or the shipping cooler or container is tampered with or opened after leaving custody of samplers.
- ☐ Custody seals should never be placed directly onto a coring tool used as a transport device (e.g., 5 g Sampler) or tared, 40 mL closed-system vials. The seals must be placed on the bag for the coring tool used as a transport device, or on the bag used to enclose the vials. Refer to Table 8-1 for details.

Instructions for completing and attaching a custody seal are included in Table 7-2.

Table 7-2. Completing and Attaching a Custody Seal

Step	Action	Important Notes
1	Record the CLP Sample Number.	The space for the CLP Sample Number does not need to be completed on custody seals being placed on the opening of a cooler, only on those being placed on the opening of sample bottles or containers.
2	Record the month, day, and year of sample collection.	
3	Sign the seal in the signature field.	
4	Print your name and title in the "Print Name and Title" field.	
5	Place the custody seal over the edge of the sample bottle or container such that it will break if tampered with.	Custody seals can be placed directly on any sample container except for coring tools used as a transport device (e.g., 5 g Samplers) and tared VOA bottles. If packing coring tools used as a transport device or tared VOA bottles, place them in a clear plastic bag and place the custody seal on the outside of the bag.
6	If possible, cover the custody seal with clear plastic tape to protect it.	Take special care to not place the protective tape over the seal in such a way that it can be removed and then re-attached without signs of tampering.

ED_004144A_00000101-01040

7.6.5 Complete and Attach Sample Tags

To support use of sample data in potential enforcement actions, sample characteristics other than on-site measurements (e.g., pH, temperature, conductivity) can be identified with a sample tag. Typically, site-specific information is written on the tags using waterproof ink.

Sample tags are not a CLP requirement. Please consult with specific RSCC as to Regional requirement. Not all EPA Regions require the use of sample tags, and field samplers should refer to their site specific project plans or contact their RSCC for Regional sample tag requirements.

An example of a completed sample tag is included in Figure 7-6 below:

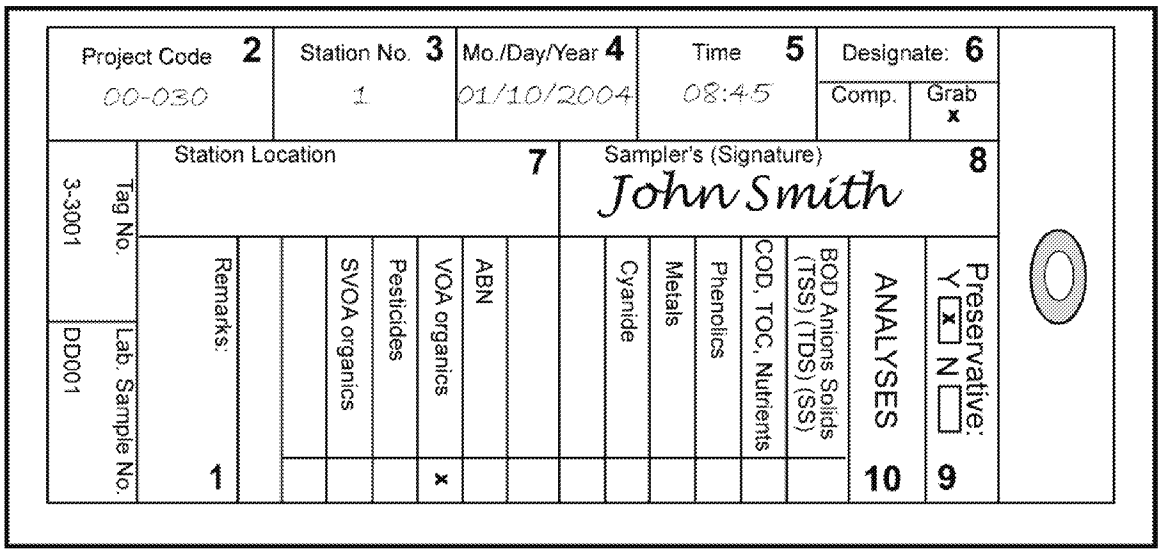

Figure 7-6. Completed Sample Tag

Complete the sample tag as follows:

- ☐ Use Scribe to create and print out multiple sample labels, one of which can be attached to the sample tag and then covered with clear packaging tape to protect the label and maintain legibility.
- ☐ If Scribe-created sample labels are not available, use the instructions for completing and attaching a handwritten sample tag in Table 7-3.
- ☐ Use waterproof ink when filling out the sample tag.
- ☐ Strike out, initial, and date any corrections.

Table 7-3. Completing and Attaching a Handwritten Sample Tag

Step	Action
1	Under the "Remarks" heading, record the CLP Sample Number and SMO-assigned CLP Case number in a legible manner.
2	Record the project code (e.g., Contract number, Work Assignment number, Interagency Agreement number, etc.) assigned by EPA.
3	Enter the location number assigned by the sampling team coordinator.
4	Record the month, day, and year of sample collection.
5	Enter the military time of sample collection (e.g., 13:01 for 1:01 PM).
6	Identify the designate and place an "X" in either the composite (Comp.) or grab (Grab) sample box.
7	Record the location.
8	Sign the sample tag in the signature area.

ED_004144A_00000101-01041

Step	Action
9	Place an "X" in the box next to Yes or No to indicate if a preservative was added to the sample.
10	Under "Analyses," place an "X" in the box next to the parameters for which the sample is to be analyzed.
11	Leave the box for "Laboratory Sample Number" blank.
12	It is recommended that the sample tag be attached to the neck of the sample bottle or container using regular string, stretch string, or wire.

7.7 Providing a Sample Receipt

After samples have been taken from private property, the sampler should prepare a receipt for these samples and provide this receipt to the property owner. This is especially important when sampling on private property since these samples could be used during future litigation and the receipt will verify that the owner granted approval for the removal of the samples from the property. An example of a sample receipt created using Scribe is shown in Figure 7-7.

Page 1 of 1

Receipt for Samples
Samples Residential Sampling

Project No. 045RD20 | Project Name: Scribe Demo | WA: 123
Samples Transferred: | Signature: | Sampler's Signature:
Samples Received By: | Signature: | John Q. Sampler

Sample #	SS-0004	SS-0004	SS-0019	SS-0019	SS-0024
Sample Date	6/9/2013	6/9/2013	6/9/2013	6/9/2013	6/25/2013
EventID	Front Yard Soil Sampling	Front Yard Soil Sampling	Back Yard Soil Sampling	Back Yard Soil Sampling	High Res Sampling
Location	H004-F	H004-F	H004-R	H004-R	H004-F
Matrix	Soil	Soil	Soil	Soil	Soil
Collection Method	Grab	Grab	Grab	Grab	Grab
Sample Type	Field Sample	Field Sample	Field Sample	Field Sample	Field Sample
Analyses	CLP TCLP Volatiles	CLP TCLP Semivolatiles	CLP TCLP Volatiles	CLP TCLP Semivolatiles	CLP 209 Congeners
CLP Sample #	Y0002	Y0002	Y0007	Y0007	PY0013
Tag	1007	1006	1017	1016	1034
Container	40 ml Vial	4oz Glass	40 ml Vial	4oz Glass	32oz Amber Jar
COC	9-060913-133741-0004	9-060113-084802-0001	9-060913-133741-0004	9-060113-084802-0001	9-070913-170237-0006
Remarks					

Sample #	SS-0024	SS-0024			
Sample Date	6/25/2013	6/25/2013			
EventID	High Res Sampling	High Res Sampling			
Location	H004-F	H004-F			
Matrix	Soil	Soil			
Collection Method	Grab	Grab			
Sample Type	Field Sample	Field Sample			
Analyses	CLP 12 Toxic Congeners	CLP Dioxins/Furans			
CLP Sample #	PY0013	PY0013			
Tag	1033	1032			
Container	32oz Amber Jar	32oz Amber Jar			
COC	9-070913-170237-0006	9-070913-170237-0006			
Remarks					

Figure 7-7. Sample Receipt Created Using the Scribe Software

ED_004144A_00000101-01042

This page is intentionally left blank.

ED_004144A_00000101-01043

8.0 CLP SAMPLE TRANSPORTATION AND SHIPPING

The sampling organization is responsible for the transportation and shipping of the Contract Laboratory (CLP) samples to the CLP laboratory that will be performing the analysis. The sampling organization is responsible for being in compliance with applicable packaging, labeling, and shipping requirements. Samplers are expected to review the applicable project plans to be aware of all State, Federal, Department of Transportation (DOT), and International Air Transport Association (IATA) regulations governing environmental and hazardous sample packaging.

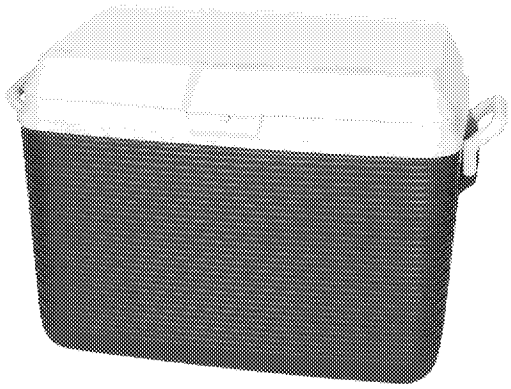

8.1 Providing Shipment Notification

Some Regions require that samplers notify their Regional Sample Control Coordinator (RSCC) (or designee) when samples are shipped, and some Regions allow samplers to contact the Sample Management Office (SMO) directly to provide shipment notification. It is mandatory that the electronic Chain of Custody (COC) through the Contract Laboratory Program Support System (CLPSS) (aka "the SMO Portal") be submitted as soon as possible after shipping. Submitting the COC electronically sends a notification to SMO and to the laboratory that the samples have been shipped. It is recommended that samplers contact the RSCC to verify if such notification is necessary. If samplers are shipping samples after 5:00 PM ET, they must notify the RSCC (or designee) and SMO by 8:00 AM ET on the following business day.

It is strongly recommended that samplers provide shipping notification to the RSCC even if they have approval to directly notify SMO. This will assure that the Region is aware early on of any changes in the final number and timing or samples delivered.

8.2 Packing and Shipping Samples

Once the samples have been collected, it is very important that the sampler properly package the samples for shipment and ensure that the samples are sent to the appropriate laboratory as quickly as possible. Prompt and proper packaging of samples will achieve the following:

- Protect the integrity of samples from changes in composition or concentration caused by bacterial growth or degradation from increased temperatures.
- Reduce the chance of leaking or breaking of sample containers that would result in loss of sample volume, loss of sample integrity, and exposure of personnel to toxic substances.
- Help ensure compliance with shipping regulations.

One CLP sample may be contained in several bottles and vials. For example, one water sample may consist of all containers needed for three of the analytical analyses available under this service (i.e., Semivolatile Organic Analysis (SVOA) analysis, Pesticide analysis, and Aroclor analysis), even though the analyses are collected in separate containers. Therefore, the analysis to be performed and the matrix type will determine the type of container(s) that will be used, as well as the volume that must be collected for that particular sample analysis.

ED_004144A_00000101-01044

8.2.1 Inventory of Samples and Documentation

Inventory the contents of the shipping container against the corresponding Traffic Report (TR/COC) record when packing for shipment to laboratories. Check for the following conditions:

- Ensure that the correct number of containers have been collected for each analysis of the samples.
- Ensure that the required Performance Evaluation (PE) and Quality Control (QC) samples and cooler temperature blanks are included.
- Verify that the correct sample numbers and analyses have been assigned to each sample.

8.2.2 Shipping Regulations

Sample shipping personnel are legally responsible for ensuring that the sample shipment will comply with all applicable shipping regulations. Ensure that the following shipping regulations are adhered to if any of the following conditions apply to the samples:

- ☐ **Domestic and foreign soil movement** - follow Unites States Department of Agriculture (USDA) soil quarantine and shipping requirements.
- ☐ **Chlorinated Dibenzo-p-Dioxin (CDD) and Chlorinated Dibenzofuran (CDF)** - follow the High Resolution Superfund Method (HRSM) Statement of Work (SOW) for specific information on safety and handling of samples potentially containing CDD/CDF.
- ☐ **Radiological** - samples suspected to be radioactive must be screened; follow instructions from the Analytical Services Branch (ASB) Project Manager.
- ☐ **Dry ice** - if dry ice is used for shipping tissue samples, follow DOT and IATA regulations. Refer to the Code of Federal Regulations (49CFR 173.217) classifying dry ice as Hazard Class 9 *UN 1845* (Hazardous Material) and IATA Dangerous Goods regulations or DOT regulations and U.S. Environmental Protection Agency (EPA) guidelines. Refer to Appendix D for detailed shipping guidelines when using SW-846 Method 5035A to preserve and ship samples.

When shipping from remote locations, dry ice may used with the regular ice for the purpose of keeping the ice from melting. Wrap the dry ice in newspaper and place above any regular ice. Never place dry ice in a sealed bag or cooler.

Access more transportation and shipping information using the following Web sites:

Dangerous goods regulations
IATA Web site
http://www.iata.org/whatwedo/cargo/Pages/index.aspx

DOT/Pipeline and Hazardous Materials Safety Administration (PHMSA)
http://phmsa.dot.gov/regulations

The type of samples collected determines the type of shipping materials to be used.

- ☐ Refer to the project plan to determine which type of shipping container should be used for each type of sample being taken during the sampling event.

ED_004144A_00000101-01045

8.2.3 Shipping Temperature

Samples must be stored in conditions that maintain sample integrity.

- All samples should be placed in shipping containers or other suitable containers with ice to reduce the temperature as soon as possible after collection.
- Ideally, all samples should be shipped the day of collection for overnight delivery to the laboratory.
- If samples cannot be shipped on the day of collection, the sample temperature should be maintained at ≤6°C, but not frozen, until they are shipped to the laboratory.

8.2.4 Pack Shipping Containers

Packing shipping containers correctly will prevent sample containers from breaking and leaking. Pack shipping containers according to the instructions outlined in Table 8-1 to prevent shipping and leaking.

Table 8-1. Packing Samples for Shipment

Step	Action	Important Notes
1	Seal all drain holes in the shipping container, both inside and out, to prevent leakage in the event of sample breakage.	
2	Check all lids/caps to make sure the samples are tightly sealed and will not leak.	
3	Wipe loose soil residue from containers.	
4	Seal samples within a clear plastic bag.	Custody seals can be placed directly on any sample container except for coring tools used as a transport device (e.g., 5 g Samplers) and tared Volatile Organic Analysis (VOA) bottles. If packing coring tools used as a transport device or tared VOA bottles, place them in a clear plastic bag and place the custody seal on the outside of the bag.
5	Fully chill those samples requiring chilling to ≤6°C, but not frozen prior to placement within suitable packing materials.	
6	Prior to placing samples within the shipping cooler, it is recommended that samplers line shipping containers with non-combustible, absorbent packing material.	The CLP strongly discourages the use of vermiculite and cat litter as sources for packing material. These materials interfere with labeling and documentation and are difficult to remove from sample containers and shipping containers.
7	Place samples in CLEAN, sealed, watertight shipping containers (metal or hard plastic coolers).	All soil/sediment samples known to contain dioxin should be securely enclosed in metal cans (e.g., paint cans) with the lids sealed.
8	Conduct an inventory of the contents of the shipping cooler/container against the corresponding TR/COC record.	
9	Cover samples in double-bagged ice to prevent water damage to packing materials.	Do NOT pour loose ice directly into the sample cooler. The ice is used to maintain the temperature of the samples within the shipping cooler.
10	It is recommended that a temperature blank be included in an area within each shipping container which will allow for easy access by the laboratory upon opening the shipping container.	The temperature blank is generally a 40 mL vial filled with water and labeled "temperature blank" but does not have a CLP Sample Number.
11	Ensure that the site name or other site-identifying information does not appear on any documentation being sent to the laboratory.	

ED_004144A_00000101-01046

Step	Action	Important Notes
12	Label the outside of the shipping container with any instructions for handling, such as, "This end up," "Do not Tamper With," or "Environmental Laboratory Samples."	
13	If shipping samples containing methanol as a preservative (e.g., samples to be analyzed by SW-846 Method 5035A), use a label to indicate methanol, the United Nations (UN) identification number for methanol (UN 1230), and Limited Quantity.	

8.2.5 Include Required Paperwork

☐ Attach the necessary paperwork to the shipping cooler or acceptable container. All paperwork must be placed in a plastic bag or pouch and then secured to the underside of the shipping container lid (Figure 8-1).

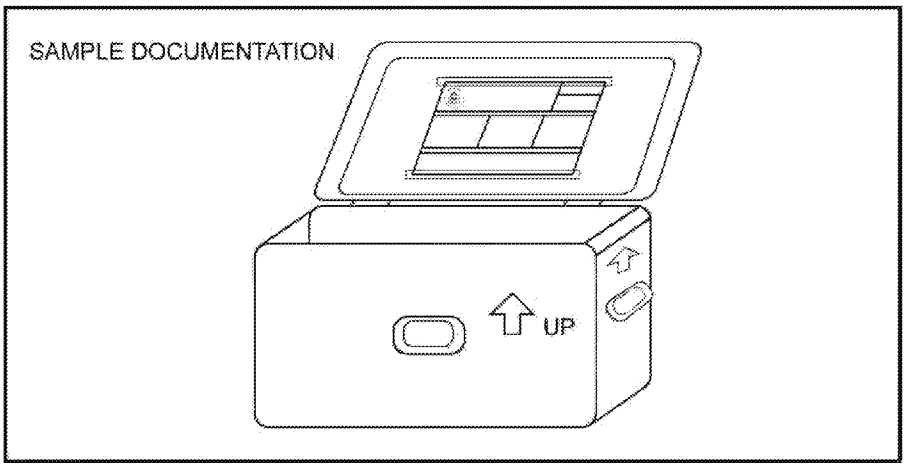

Figure 8-1. Sample Cooler with Attached TR/COC Record, PE Sample Instructions (if applicable), and Cooler Return Documentation

Required paperwork includes:

- TR/COC records
- Sample weight logs (Figure 4-1), if required for VOA samples.
- PE instruction sheets if PE samples are included in the cooler.

Contact the RSCC (or designee) for specific paperwork requirements.

8.2.6 Label and Seal Sample Shipping Coolers

After samples are packaged within shipping containers, samplers must carefully secure the top and bottom of the coolers with tape, place return address labels clearly on the outside of the container, and attach the required chain of custody seals (Figure 8-2).

ED_004144A_00000101-01047

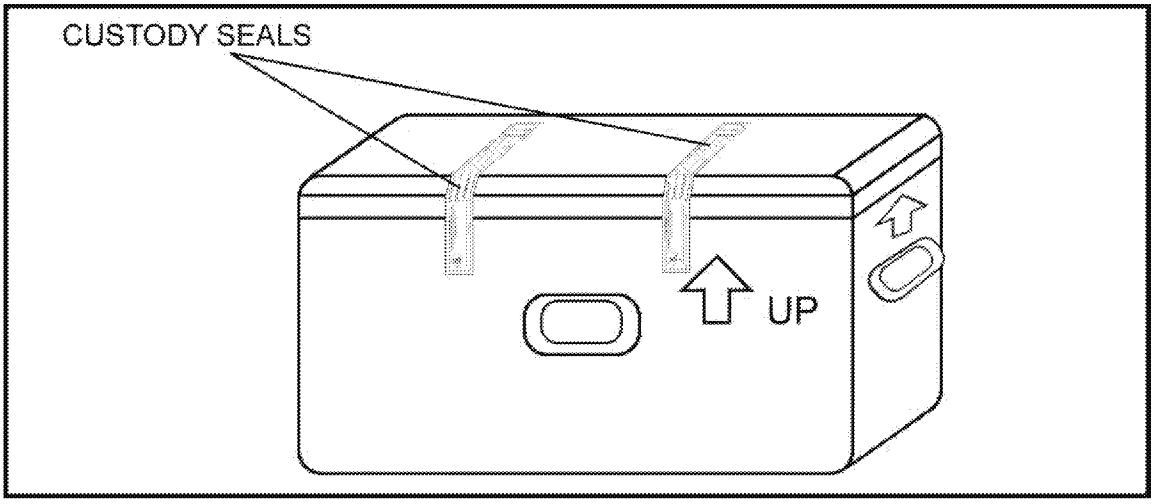

Figure 8-2. Shipping Cooler with Custody Seals

Use the following guidelines when labeling shipping containers:

- If more than one container is being delivered to a laboratory, samplers should mark each cooler as "1 of 2," "2 of 2," etc.
- An airbill, addressed to the Sample Custodian of the receiving laboratory, must be completed for each cooler shipped. Samplers should receive the correct name, address, and telephone number of the laboratory to which they must ship samples from the RSCC or SMO.
- To avoid delays in analytical testing, samplers should make sure they are sending the correct types of samples to the correct laboratory when collecting samples for multiple types of analysis. For example, inorganic samples may be shipped to one laboratory for analysis, while organic samples may need to be shipped to another laboratory.
- Be aware of the shipping company's hours of operation, shipping schedule, and pick-up/drop-off requirements.

8.2.7 Overnight Delivery

It is imperative that samples be sent via overnight delivery. Delays due to longer shipment times may cause technical holding times to expire, or the temperature to rise above the preservation limit, which in turn may destroy sample integrity or require the recollection of samples for analysis.

8.2.8 Saturday Delivery

For shipping samples for Saturday delivery, the sampler MUST notify the RSCC (or their designee) and SMO as soon as possible so that SMO will receive the delivery information by 3:00 PM ET on the Friday prior to delivery.

8.2.9 Shipment Notification

When samples are shipped to CLP Laboratories, samplers **must immediately** report all sample shipments to the RSCC (or designee) or to SMO. **Under no circumstances should the sampler contact the laboratory directly.** If samplers are shipping samples after 5:00 PM ET, they must notify the RSCC (or designee) or SMO by 8:00 AM ET on the following business day. Samplers should receive the name and phone number of the appropriate SMO coordinator to contact from the Region/RSCC. Samplers should be aware if their Region requires them to notify the RSCC (or designee) and/or SMO of sample shipment.

ED_004144A_00000101-01048

Samplers must provide the following information to the RSCC (or designee) or to SMO:

- Name and phone number at which they can easily be reached (preferably closest on-site phone number if still in the field)
- SMO-assigned Case number
- Number, matrix and analysis of samples being shipped, and MA number (if required)
- Name of laboratory (or laboratories) to which the samples were shipped
- Airbill number(s)
- Date of shipment
- Case status (i.e., whether or not the Case is complete)
- Problems encountered, special comments, or any unanticipated issues
- When to expect the next anticipated shipment

For Saturday delivery, samplers MUST notify the RSCC (or designee) and SMO as soon as possible so that SMO will receive the delivery information by 3:00 PM ET on the Friday prior to delivery.

8.2.10 Uploading the Electronic COC

The electronic COC record must be uploaded to SMO as soon as possible after sample shipment. The following is an overview of the steps used to upload the electronic COC:

☐ Using **Scribe**:
- Under **Sample Management**, click on **Chain of Custody** link.
- Click the **Export** button on the top of the menu bar.
- Select the **COC XML File (.xml)** option.
- Select the **COC(s)** to be exported.
- Make sure that the **CLP Region Copy COC XML Template** is checked.
- Click **OK**.
- Provide a **filename** for the exported XML file. Per CLP guidance, the XML file name must reference the Region #; Case Number and today's date.
- Click the **Save** button.

☐ Using the **Contract Laboratory Program Support System (CLPSS)**:
- Select the **Submit Chain of Custody** task from the SMO Portal.
- Select the **COC** file to upload.
- Enter any **comments** associated with the COC file.
- **Submit the file**; CLPSS provides a confirmation page.
- **Print or download** a copy of the submission summary to keep as a record of the submission.

For a detailed description of how to create and upload electronic COC files using Scribe and CLPSS, refer to each system's user documentation.

8.2.11 Return Sample Shipping Coolers

CLP laboratories must routinely return sample shipping coolers within 14 calendar days following shipment receipt. Therefore, the sampler should also include cooler return instructions with each shipment. The **sampler** (not the CLP laboratory) is responsible for paying for the disposition (return or disposal) of the cooler and should also include shipping airbills bearing the sampler's account number, as well as a return address to allow for cooler return. **Samplers should use the least expensive return shipping option possible.**

ED_004144A_00000101-01049

9.0 SAMPLER RESOURCES

This Guide provides a summary of many of the resources used to define and manage the sampling process. The sampler may need to refer to the original source documents or Web sites for further information or clarification. The resources cited in this Guide are listed in this section.

9.1 List of Resources

Table 9-1 provides a list of resources available to samplers. These resources are referenced throughout this Guide.

Table 9-1. Resources for Samplers

Resource	Location
United States Environmental Protection Agency (EPA) Statements of Work	http://www.epa.gov/superfund/programs/clp/analytic.htm
Scribe Software Support	http://www.ertsupport.org/scribe_home.htm
Contract Laboratory Program Support System (CLPSS)	https://epasmoweb.fedcsc.com/smoportal
EPA Environmental Response Team (ERT) User Manual for Scribe Contract Laboratory Program (CLP) Sampling	http://www.epaosc.org/sites/ScribeGIS/files/Scribe%20CLP%20User%20Guide.pdf
CLP Guidance Documents	http://www.epa.gov/superfund/programs/clp/guidance.htm
Department of Transportation (DOT) Pipeline and Hazardous Materials Safety Administration (PHMSA) regulations	http://phmsa.dot.gov/hazmat
Use of Dry Ice - Federal Regulations (49CFR 173.217) classified dry ice as Hazard Class 9 *UN 1845* (Hazardous Material).	http://www.gpo.gov/fdsys/pkg/CFR-2004-title49-vol2/xml/CFR-2004-title49-vol2-sec173-217.xml
International Air Transport Association (IATA) transportation regulations	http://www.iata.org
United States Department of Agriculture (USDA) Regulated Organisms and Soil Permits	http://www.aphis.usda.gov/plant_health/permits/organism/soil/
Common Ground Alliance - marking for underground utilities	http://www.call811.com

ED_004144A_00000101-01050

Resource	Location
Water Sampling Requirements of Dissolved Metals determinators	***EPA Method SW-3005A – Acid Digestion of Waters for Total Recoverable or Dissolved Metals for Analysis by FLAA or ICP Spectroscopy, Section 2.2:*** Dissolved metals - The sample is filtered through a 0.45-µm filter at the time of collection and the liquid phase is then acidified at the time of collection with nitric acid. Samples for dissolved metals do not need to be digested as long as the acid concentrations have been adjusted to the same concentration as in the standards. http://www.epa.gov/osw/hazard/testmethods/sw846/online/3_series.htm
	Clean Water Act (CWA), §136.3 Identification of test procedures. Table II—Required Containers, Preservation Techniques, and Holding Times [7]For dissolved metals, filter grab samples within 15 minutes of collection and before adding preservatives. For a composite sample collected with an automated sampler (e.g., using a 24-hour composite sampler; see 40 CFR 122.21(g)(7)(i) or 40 CFR Part 403, Appendix E), filter the sample within 15 minutes after completion of collection and before adding preservatives. If it is known or suspected that dissolved sample integrity will be compromised during collection of a composite sample collected automatically over time (e.g., by interchange of a metal between dissolved and suspended forms), collect and filter grab samples to be composited (footnote 2) in place of a composite sample collected automatically. http://www.ecfr.gov/cgi-bin/text-idx?SID=ed1ce4541f86f730e11600ca39e3926b&node=40:24.0.1.1.1&rgn=div5#40:24.0.1.1.1.0.1.3
EPA Method SW-846 5035A - Closed-System Purge-and-Trap Extraction for Volatile Organics in Soil and Waste Samples	http://www.epa.gov/osw/hazard/testmethods/pdfs/5035a_r1.pdf
NIOSH/OSHA/USCG/EPA Occupational Safety and Health Guidance Manual for Hazardous Waste Site Activities	http://www.osha.gov/Publications/complinks/OSHG-HazWaste/all-in-one.pdf
The Roles of Project Managers and Laboratories in Maintaining the Representativeness of Incremental and Composite Soil Samples, EPA/OSWER 9200.1-117FS	http://www.clu-in.org/download/char/RolesofPMsandLabsinSubsampling.pdf

9.2 For More Information

For more information regarding the CLP or this Guide, refer to the Superfund Analytical Services/Contract Laboratory Program Web site at:
http://www.epa.gov/superfund/programs/clp/contacts.htm#contacts

ED_004144A_00000101-01051

APPENDIX A FUNCTIONS WITHIN A SAMPLING PROJECT

The following table describes Quality Assurance Project Plan (QAPP) requirements taken from *EPA Requirements for Quality Assurance Project Plans* (EPA QA/R-5).

Table A-1. QAPP Requirements

Functions Within a Sampling Project	Elements of that Function
Project Management	
Project/Task Organization	Identifies the individuals or organizations participating in the project and defines their specific roles and responsibilities.
Problem Definition/Background	States the specific problem to be solved or decision to be made and includes sufficient background information to provide a historical and scientific perspective for each particular project.
Project/Task Description	Describes the work to be performed and the schedule for implementation to include: • Measurements to be made during the course of the project • Applicable technical, regulatory, or program-specific quality standards, criteria, or objectives • Any special personnel and equipment requirements; assessment tools needed • A work schedule and any required project and quality records, including types of reports needed
Quality Objectives and Criteria	Describes the project quality objectives and measurement performance criteria.
Special Training/Certification	Ensures that any specialized training for modified field sampling techniques, field analyses, laboratory analyses, or data validation should be specified.
Documents and Records	• Itemizes the information and records that must be included in the data report package and specifies the desired reporting format for hard copy and electronic forms, when used. • Identifies any other records and/or documents applicable to the project such as audit reports, interim progress reports, and final reports that will be produced. • Specifies or references all applicable requirements for the final disposition of records and documents, including location and length of retention period.
Data Generation and Acquisition	
Sampling Process Design (Experimental Design)	• Describes the experimental design or data collection design for the project. • Classifies all measurements as critical or non-critical.
Sampling Methods	• Describes the procedures for collecting samples and identifies sampling methods and equipment. Includes any implementation requirements, support facilities, sample preservation requirements, and materials needed. • Describes the process for preparing and decontaminating sampling equipment to include the disposal of decontamination by-products, selection and preparation of sample containers, sample volumes, preservation methods, and maximum holding times for sampling, preparation, and/or analysis. • Describes specific performance requirements for the method. • Addresses what to do when a failure in sampling occurs, who is responsible for corrective action, and how the effectiveness of the corrective action shall be determined and documented.
Sample Handling and Custody	• Describes the requirements and provisions for sample handling and custody in the field, laboratory, and transport, taking into account the nature of the samples, the maximum allowable sample holding times before extraction and analysis, and the available shipping options and schedules. • Includes examples of sample labels, custody forms, and sample custody logs.

ED_004144A_00000101-01052

Functions Within a Sampling Project	Elements of that Function
Analytical Methods	• Identifies the analytical methods and equipment required, including sub-sampling or extraction methods, waste disposal requirements (if any), and specific method performance requirements. • Identifies analytical methods by number, date, and regulatory citation (as appropriate). If a method allows the user to select from various options, the method citations should state exactly which options are being selected. • Addresses what to do when a failure in the analytical system occurs, who is responsible for corrective action, and how the effectiveness of the corrective action shall be determined and documented. • Specifies the laboratory turnaround time needed, if important to the project schedule. • Specifies whether a field sampling and/or laboratory analysis Case Narrative is required to provide a complete description of any difficulties encountered during sampling or analysis.
Quality Control (QC)	• Identifies required measurement QC checks for both the field and laboratory. • States the frequency of analysis for each type of QC check, and the spike compounds sources and levels. • States or references the required control limits for each QC check and corrective action required when control limits are exceeded and how the effectiveness of the corrective action shall be determined and documented. • Describes or references the procedures to be used to calculate each of the QC statistics.
Instrument/Equipment Testing, Inspection, and Maintenance	• Describes how inspections and acceptance testing of environmental sampling and measurement systems and their components will be performed and documented. Identifies and discusses the procedure by which final acceptance will be performed by independent personnel. • Describes how deficiencies are to be resolved and when re-inspection will be performed. • Describes or references how periodic preventative and corrective maintenance of measurement or test equipment shall be performed. • Identifies the equipment and/or system requiring periodic maintenance. • Discusses how the availability of spare parts identified in the operating guidance and/or design specifications of the systems will be assured and maintained.
Instrument/Equipment Calibration and Frequency	• Identifies all tools, gauges, instruments, and other sampling, measuring, and test equipment used for data collection activities affecting quality that must be controlled, and at specific times, calibrated to maintain performance within specified limits. • Identifies the certified equipment and/or standards used for calibration. • Describes or references how calibration will be conducted using certified equipment and/or standards with known valid relationships to nationally recognized performance standards. If no such standards exist, documents the basis for calibration. • Indicates how records of calibration shall be maintained and traced to the instrument.
Inspection/Acceptance of Supplies and Consumables	• Describes how and by whom supplies and consumables shall be inspected and accepted for use in the project. • States acceptance criteria for such supplies and consumables.
Non-direct Measurements	• Identifies any types of data needed for project implementation or decision-making that are obtained from non-measurement sources (e.g., computer databases, programs, literature files, historical databases). • Describes the intended use of data. • Defines the acceptance criteria for the use of such data in the project. • Specifies any limitations on the use of the data.
Data Management	• Describes the project data management scheme, tracing the data path from generation in the field or laboratory to their final use or storage. • Describes or references the standard record-keeping procedures, document control system, and the approach used for data storage and retrieval on electronic media.

ED_004144A_00000101-01053

APPENDIX B SAMPLE CONTAINER TYPE SPECIFICATIONS

Table B-1. Sample Container Type Specifications

Reference Number	Container Type	Specifications	
		Closure	Septum
1	40 mL amber glass vial, 24 mm neck finish.	Polypropylene or phenolic, open-top screw-cap, 15 cm opening, 24-400 size.	24 mm disc of 0.005 in. Polytetrafluoroethylene (PTFE) bonded to 0.120 in. silicone for a total thickness of 0.125 in.
2	1 L high density polyethylene, cylinder-round bottle, 28 mm neck finish.	Polyethylene cap, ribbed, 28-410 size; F217 polyethylene liner.	N/A
3	8 oz short, wide mouth, straight-sided, glass jar, 70 mm neck finish.	Polypropylene or phenolic cap, 70-400 size; 0.015 in. PTFE liner.	N/A
4	4 oz (120 mL) tall, wide mouth, straight-sided, glass jar, 48 mm neck finish.	Polypropylene or phenolic cap, 48-400 size; 0.015 in. PTFE liner.	N/A
5	1 L amber round glass bottle, 33 mm pour-out neck finish.	Polypropylene or phenolic cap, 33-430 size; 0.015 in. PTFE liner.	N/A
6	Coring tool used as a transport device (e.g., 5 g Sampler).	Has built-in closing mechanism.	N/A
7	1 qt polymer zip-top bag	Has built-in closing mechanism.	N/A
8	Heavy duty aluminum foil	N/A	N/A

ED_004144A_00000101-01054

Table B-2. Sample Container Type Specifications with Analysis

Reference Number	Analysis	Matrix	Sample Type	Container Type[2]	Specifications	
					Closure	Septum
1	VOA	Water	Samples Only	40 mL amber glass vial, 24 mm neck finish.	Polypropylene or phenolic, open-top screw-cap, 15 cm opening, 24-400 size.	24 mm disc of 0.005 in. Polytetrafluoroethylene (PTFE) bonded to 0.120 in. silicone for a total thickness of 0.125 in.
			Samples with SIM[1]			
			Samples with MS/MSD			
	VOA	Soil/Sediment[2]	**(Option 1)** Samples Only			
			(Option 1) Samples with MS/MSD			
	VOA	Soil/Sediment[2]	**(Option 2)** Samples Only			
			(Option 2) Samples with MS/MSD			
	VOA	Soil/Sediment[2]	**(Option 4)** Samples for TCLP/SPLP Only			
2	Metals/ICP-AES, Metals/ICP-MS, and/or Mercury by CVAA	Water	Samples Only	1 L high density polyethylene, cylinder-round bottle, 28 mm neck finish.	Polyethylene cap, ribbed, 28-410 size; F217 polyethylene liner.	N/A
			Samples with MS/Duplicate			
	Cyanide/ Spectrophotometric Determination	Water	Samples Only			
			Sample with MS/Duplicate			
3	SVOA	Soil/Sediment[3]	Samples Only	8 oz short, wide mouth, straight-sided, glass jar, 70 mm neck finish.	Polypropylene or phenolic cap, 70-400 size; 0.015 in. PTFE liner.	N/A
			Samples for TCLP/SPLP			
			Samples with MS/MSD			
	SVOA SIM	Soil/Sediment[3]	Samples Only			
			Samples with MS/MSD			

ED_004144A_00000101-01055

Reference Number	Analysis	Matrix	Sample Type	Container Type[2]	Specifications	
					Closure	Septum
	Pesticides	Soil/Sediment[3]	Samples Only			
			Samples for TCLP/SPLP			
			Samples with MS/MSD			
	Aroclors	Soil/Sediment[3]	Samples Only			
			Samples with MS/MSD			
	Metals/ICP-AES, Metals/ICP-MS, and/or Mercury by CVAA	Soil/Sediment[4]	Samples Only			
			Samples for TCLP/SPLP			
			Samples with MS/Duplicate			
	Cyanide/ Spectrophotometric Determination	Soil/Sediment[4]	Samples Only			
			Samples for SPLP			
			Samples with MS/Duplicate			
	CDD/CDF and CBC	Soil/Sediment/Oil/ Ash/Biosolid	----------			
	CDD/CDF and CBC	Tissue	----------			
4	SVOA	Soil/Sediment[3]	Samples Only	4 oz (120 mL) tall, wide mouth, straight-sided, glass jar, 48 mm neck finish.	Polypropylene or phenolic cap, 48-400 size; 0.015 in. PTFE liner.	N/A
			Samples for TCLP/SPLP			
			Samples with MS/MSD			
	SVOA SIM	Soil/Sediment[3]	Samples Only			
			Samples with MS/MSD			
	Pesticides	Soil/Sediment	Samples Only			
			Samples for TCLP/SPLP			
			Samples with MS/MSD			
	Aroclors	Soil/Sediment	Samples Only			

ED_004144A_00000101-01056

Reference Number	Analysis	Matrix	Sample Type	Container Type[2]	Specifications	
					Closure	Septum
			Samples with MS/MSD			
	CDD/CDF and CBC	Soil/Sediment/Oil/ Ash/Biosolid	----------			
	CDD/CDF and CBC	Tissue	----------			
5	SVOAs	Water[5]	Samples Only	1 L amber round glass bottle, 33 mm pour-out neck finish.	Polypropylene or phenolic cap, 33-430 size; 0.015 in. PTFE liner.	N/A
			Samples with MS/MSD			
	SVOA SIM	Water[5]	Samples Only			
			Samples with MS/MSD			
	Pesticides	Water[5]	Samples Only			
			Samples with MS/MSD			
	Aroclors	Water[5]	Samples Only			
			Samples with MS/MSD			
	CDD/CDF and CBC	Water	----------			
6	VOA	Soil/Sediment	**(Option 3)** Samples Only	Coring tool used as a transport device (e.g., 5 g Sampler).	Has built-in closing mechanism.	N/A
			(Option 3) Samples with MS/MSD			
7	Metals/ICP-AES	Wipe	Samples Only	1 qt polymer zip-top bag	Has built-in closing mechanism.	N/A
8	CDD/CDF and CBC	Tissue	----------	Heavy duty aluminum foil	N/A	N/A

1 Available through Modified Analysis (MA) only.
2 Vials for soil analysis are typically pre-labeled and tared. Vials for water analysis are not pre-labeled or tared.
3 If one or two extractable analyses are required for soil/sediment, only a single 8 oz. jar is required. If three extractable analyses are required, two 8 oz. jars are required. The number of jars should be doubled if MS/MSD is required
4 Only one 8 oz. jar is needed for soil/sediment when all metals (including mercury) and cyanide analyses are required for soil/sediment samples. Collect more than one jar when TCLP or SPLP are scheduled.
5 An aqueous sample for SVOA analysis would require the field sampler to collect at least 2 L of field samples and at least 2 L each for the MS and MSD samples for a total volume of 6 L. If Pesticide or Aroclor MS/MSD analyses are required for the same sample, an additional 6 L must be collected for each analysis method. Collect additional volume for MS/MSD samples to allow for sufficient volume for these analyses in the event sample volume is lost as a result of samples breaking, leaking, or laboratory accidents.

ED_004144A_00000101-01057

APPENDIX C CLP SAMPLE COLLECTION REQUIREMENTS BY ANALYSIS TYPE

Table C-1. Sample Collection Requirements for CLP SOW SOM02.X (Volatile Organic Analysis Only)

Analysis	Matrix	Sample Type	Container Type[1]	Minimum Number of Containers Needed				Minimum Volume/Mass[2]	Important Notes	Preservative[3]	Technical Holding Time[4]
				with Water	Dry	% Moisture	TOTAL				
VOA	Water	Samples Only	40 mL amber glass vial, 24 mm neck finish. See Table B-1, Reference Number 1.	-	-	-	**3**	Fill to capacity	Containers/vials must be filled to capacity with no headspace or air bubbles. Refer to Appendix E for samples requiring QC analyses. If amber containers are not available, the samples should be protected from light.	Preserve to a pH of 2 with HCl and cool to ≤ 6°C, but not frozen, immediately after collection. DO NOT FREEZE water samples.	14 days
		Samples with SIM[5]		-	-	-	**5**				
		Samples with MS/MSD									
	Soil/ Sediment	Samples Only	**OPTION 1** Closed-system 40 mL amber glass vial containing magnetic stirrer, 24 mm neck finish. See Table B-1, Reference Number 1.	-	3	1	**4**	5g (at least 50 g for TCLP or SPLP)	Place samples on side prior to being iced.[7] Refer to Appendix E for samples requiring QC analyses.	Frozen to < -7°C **OR** Iced to ≤ 6°C, but not frozen.	14 days **OR** 48 hours (unpreserved)[6]
		Samples with MS/MSD		-	9	3	**12**				
		Samples Only	**OPTION 2** Closed-system 40 mL amber glass vial containing magnetic stirrer, 24 mm neck finish and 5 mL water. See Table B-1, Reference Number 1.	3	-	1	**4**	5 g	Place samples on side prior to being iced.[7] Refer to Appendix E for samples requiring QC analyses.	Frozen to < -7°C **OR** Iced to ≤ 6°C, but not frozen.	14 days **OR** 48 hours (unpreserved)[6]
		Samples with MS/MSD		9	-	3	**12**				
		Samples Only	**OPTION 3** Coring tool used as a transport device. See Table B-1, Reference Number 6.	-	3	1	**4**	5 g	Refer to Appendix E for samples requiring QC analysis. Place samples on side prior to being iced.[7]	Frozen to < -7°C. **OR** Iced to ≤ 6°C, but not frozen.	14 days **OR** 48 hours (unpreserved)[6]
		Samples with MS/MSD		-	9	3	**12**				

ED_004144A_00000101-01058

Analysis	Matrix	Sample Type	Container Type[1]	Minimum Number of Containers Needed				Minimum Volume/Mass[2]	Important Notes	Preservative[3]	Technical Holding Time[4]
				with Water	Dry	% Moisture	TOTAL				
		Samples for TCLP/SPLP Only	**OPTION 4** Closed-system 40 mL amber glass vial 24 mm neck finish. See Table B-1, Reference Number 1.	-	4	-	**4**	25 g	Place samples on side prior to being iced.[7]	Iced to ≤ 6°C but not frozen.	14 days

Notes

1 Vials for soil analysis are typically pre-labeled and tared. Vials for water analysis are not pre-labeled or tared.
2 Minimum volume/mass to be collected in order to ensure sample analysis can be performed. Collect additional volume for MS/MSD samples to allow for sufficient volume for these analyses in the event sample volume is lost as a result of samples breaking, leaking, or laboratory accidents.
3 Check Regional guidance regarding use of acid as a preservative of samples that may contain carbonates, residual chlorine, and other oxidants.
4 Technical holding time is calculated from the time of sample collection to sample extraction, and determined as 14 days for preserved (frozen or iced) samples and 48 hours for non-preserved (iced) samples.
5 Available through Modified Analysis (MA) only.
6 Unpreserved soil samples can be frozen or iced at the time of receipt by the laboratory to increase holding time.
7 Vials are place on their side so that the septum is wet on the inside, thereby preventing vapor leaks around it, in case any bubbles form. Also, in case they freeze, you want the water to expand into the flexible septum rather than breaking the vial.

ED_004144A_00000101-01059

Table C-2. Sample Collection Requirements for CLP SOW SOM02.X (SVOAs, Pesticides and Aroclors)

Analysis	Matrix	Sample Type	Container Type	Minimum Volume/Mass[1]	Important Notes	Preservative/ Collection	Technical Holding Time[2]
SVOAs	Water[3]	Samples Only	1 L amber round glass bottle, 33 mm pour-out neck finish. See Table B-1, Reference Number 5.	2 L (per Test)	If amber containers are not available, the samples should be protected from light.	Cool all samples to ≤ 6°C, but not frozen, immediately after collection. DO NOT FREEZE water samples.	7 days
		Samples with MS/MSD	1 L amber round glass bottle, 33 mm pour-out neck finish. See Table B-1, Reference Number 5.	6 L			
	Soil/ Sediment[4]	Samples Only	One 8 oz short, wide mouth, straight-sided, glass jar, 70 mm neck finish or two 4 oz tall, wide mouth, straight-sided, glass jar, 48 mm neck finish. See Table B-1, Reference Numbers 3 and 4.	150 g (at least 500 g for TCLP or SPLP)		Cool all samples to ≤ 6°C, but not frozen, immediately after collection.	14 days
		Samples for TCLP/SPLP	Two 8 oz short, wide mouth, straight-sided, glass jars, 70 mm neck finish or 4 oz tall, wide mouth, straight-sided, glass jar, 48 mm neck finish. See Table B-1, Reference Numbers 3 and 4.	300 g			
		Samples with MS/MSD	Two 8 oz short, wide mouth, straight-sided, glass jars, 70 mm neck finish or 4 oz tall, wide mouth, straight-sided, glass jar, 48 mm neck finish. See Table B-1, Reference Numbers 3 and 4.	300 g			
SVOA SIM	Water[3]	Samples Only	1 L amber round glass bottle, 33 mm pour-out neck finish. See Table B-1, Reference Number 5.	2 L	If amber containers are not available, the samples should be protected from light.	Cool all samples to ≤6°C, but not frozen, immediately after collection. DO NOT FREEZE water samples.	7 days
		Samples with MS/MSD	1 L amber round glass bottle, 33 mm pour-out neck finish. See Table B-1, Reference Number 5.	6 L			
	Soil/ Sediment[4]	Samples Only	One 8 oz short, wide mouth, straight-sided, glass jar, 70 mm neck finish or two 4 oz tall, wide mouth, straight-sided, glass jar, 48 mm neck finish. See Table B-1, Reference Numbers 3 and 4.	150 g		Cool all samples to ≤ 6°C, but not frozen, immediately after collection.	14 days
		Samples with MS/MSD	Two 8 oz short, wide mouth, straight-sided, glass jars, 70 mm neck finish or four 4 oz tall, wide mouth, straight-sided, glass jar, 48 mm neck finish. See Table B-1, Reference Numbers 3 and 4.	300 g			

ED_004144A_00000101-01060

Table C-2. (Continued) Sample Collection Requirements for CLP SOW SOM02.X (SVOAs, Pesticides and Aroclors)

Analysis	Matrix	Sample Type	Container Type	Minimum Volume/Mass[1]	Important Notes	Preservative/ Collection	Technical Holding Time[2]
Pesticides	Water[3, 5]	Samples Only	1 L amber round glass bottle, 33 mm pour-out neck finish. See Table B-1, Reference Number 5.	2 L	If amber containers are not available, the samples should be protected from light.	Cool all samples to ≤ 6°C), but not frozen, immediately after collection. DO NOT FREEZE water samples.	7 days
		Samples with MS/MSD	1 L amber round glass bottle, 33 mm pour-out neck finish. See Table B-1, Reference Number 5.	6 L			
	Soil/ Sediment[4]	Samples Only	One 8 oz short, wide mouth, straight-sided, glass jar, 70 mm neck finish or four 4 oz tall, wide mouth, straight-sided, glass jar, 48 mm neck finish. See Table B-1, Reference Numbers 3 and 4.	150 g		Cool all samples to ≤ 6°C, but not frozen, immediately after collection.	14 days
		Samples for TCLP/SPLP	Two 8 oz short, wide mouth, straight-sided, glass jars, 70 mm neck finish or four 4 oz tall, wide mouth, straight-sided, glass jar, 48 mm neck finish. See Table B-1, Reference Numbers 3 and 4.	300 g			
		Samples with MS/MSD	Two 8 oz short, wide mouth, straight-sided, glass jars, 70 mm neck finish or four 4 oz tall, wide mouth, straight-sided, glass jar, 48 mm neck finish. See Table B-1, Reference Numbers 3 and 4.	300 g			
Aroclors	Water[3, 5]	Samples Only	1 L amber round glass bottle, 33 mm pour-out neck finish. See Table B-1, Reference Number 5.	2 L	If amber containers are not available, the samples should be protected from light.	Cool all samples to ≤ 6°C, but not frozen, immediately after collection. DO NOT FREEZE water samples.	7 days
		Samples with MS/MSD	1 L amber round glass bottle, 33 mm pour-out neck finish. See Table B-1, Reference Number 5.	6 L			
	Soil/ Sediment[4]	Samples Only	One 8 oz short, wide mouth, straight-sided, glass jar, 70 mm neck finish or 4 oz tall, wide mouth, straight-sided, glass jar, 48 mm neck finish. See Table B-1, Reference Numbers 3 and 4.	150 g		Cool all samples to ≤ 6°C, but not frozen, immediately after collection.	14 days
		Samples with MS/MSD	Two 8 oz short, wide mouth, straight-sided, glass jars, 70 mm neck finish or four 4 oz tall, wide mouth, straight-sided, glass jar, 48 mm neck finish. See Table B-1, Reference Numbers 3 and 4.	300 g			

Notes

1 Minimum volume/mass to be collected in order to ensure sample analysis can be performed.

2 This technical holding time is calculated from the time of sample collection to sample extraction. Sample extracts are to be analyzed within 40 days of extraction. It is recommended that samplers ship samples to the laboratory on the same day that they are collected, or as soon as possible thereafter.

3 An aqueous sample for SVOA analysis would require the field sampler to collect at least 2 L of field samples and at least 2 L each for the MS and MSD samples for a total volume of 6 L. If Pesticide or Aroclor MS/MSD analyses are required for the same sample, an additional 6 L must be collected for each analysis method. Collect additional volume for MS/MSD samples to allow for sufficient volume for these analyses in the event sample volume is lost as a result of samples breaking, leaking, or laboratory accidents.

4 If one or two extractable analyses are required for soil/sediment, only a single 8 oz. jar is required. If three extractable analyses are required, two 8 oz. jars are required. The number of jars should be doubled if MS/MSD is required.

5 Samplers must test for chlorine in aqueous samples in the field upon collection. Refer to the SAP and Appendix E for guidance.

ED_004144A_00000101-01061

Table C-3. Sample Collection Requirements for CLP SOW ISM02.X

Analysis	Matrix	Sample Type	Container Type	Minimum Volume/ Mass[1]	Important Notes	Preservative/ Collection[2]	Technical Holding Time[3]
Metals/ICP-AES, Metals/ICP-MS, and/or Mercury by CVAA	Water	Samples Only	1 L high density polyethylene, cylinder-round bottle, 28 mm neck finish. See Table B-1, Reference Number 2.	1L	DO NOT FREEZE water samples.	Acidify to pH < 2 with HNO_3 immediately after collection.[4]	6 months for all metals except Mercury (28 days)
		Samples with MS/Duplicate		2L			
	Soil/ Sediment[5]	Samples Only	One 8 oz short, wide mouth, straight-sided, glass jar, 70 mm neck finish. See Table B-1, Reference Number 3.	Fill to capacity		Cool to ≤ 6°C, but not frozen, immediately after collection.	6 months
		Samples for TCLP/SPLP					
		Samples with MS/Duplicate					
Metals/ICP-AES[6]	Wipe	Samples Only	1 qt polymer zip-top bag. See Table B-1, Reference Number 7.	N/A		Store at room temperature.	6 months
Cyanide/ Spectrophotometric Determination	Water	Samples Only	1 L high density polyethylene, cylinder-round bottle, 28 mm neck finish. See Table B-1, Reference Number 2.	1L	DO NOT FREEZE water samples.	To neutralize residual chlorine, add 0.6 g ascorbic acid for each liter of sample collected, immediately upon collection.[7] Add NaOH until pH > 10 and cool to ≤ 6°C, but not frozen, immediately after collection.	14 days
		Sample with MS/Duplicate		2L			
	Soil/ Sediment[5]	Samples Only	One 8 oz short, wide mouth, straight-sided, glass jar, 70 mm neck finish. See Table B-1, Reference Number 3.	Fill to capacity		Cool to ≤ 6°C, but not frozen, immediately after collection.	14 days
		Samples for SPLP					
		Samples with MS/Duplicate					

Notes

1 Minimum volume/mass to be collected in order to ensure sample analysis can be performed.
2 Check Regional guidance regarding use of acid as a preservative of samples that may contain carbonates, residual chlorine, and other oxidants.
3 This technical holding time is calculated from the time of sample collection to sample extraction. Sample extracts are to be analyzed within 40 days of extraction.
4 Water samples collected for total metal and filtered metal analyses from the same sampling location must be assigned separate (unique) CLP Sample Numbers.
5 Only one 8 oz. jar is needed for soil/sediment when all metals (including mercury) and cyanide analyses are required for soil/sediment samples. Collect more than one jar when TCLP or SPLP are scheduled.
6 Wipe materials have varied from laboratory tissues (e.g., Kimwipes®) to pre-moistened "baby wipes" from the nearest store.
7 Samplers must test for sulfide and oxidizing agents (e.g., chlorine) in aqueous samples in the field upon collection. Refer to the SAP and Appendix E for guidance. Sulfides adversely affect the analytical procedure. The following can be done to test for and neutralize sulfides. Place a drop of the sample on lead acetate test paper to detect the presence of sulfides. If sulfides are present, treat 25 mL more of the sample than that required for the cyanide determination with powdered cadmium carbonate or lead carbonate. Yellow cadmium sulfide or black lead sulfide precipitates if the sample contains sulfide. Repeat this operation until a drop of the treated sample solution does not darken the lead acetate test paper. Filter the solution through a dry filter paper into a dry beaker, and from the filtrate measure the sample to be used for analysis. Avoid a large excess of cadmium carbonate and a long contact time in order to minimize a loss by complication or occlusion of cyanide on the precipitated material. Sulfide removal should be performed in the field, if practical, prior to pH adjustment with NaOH.

ED_004144A_00000101-01062

Table C-4. Sample Collection Requirements for CLP SOW HRSM01.X [CDDs, CDFs, and CBCs]

Analysis	Matrix	Container Types	Minimum Volume/Mass[1]	Important Notes	Preservative	Technical Holding Time[2]
CDD/CDF and CBC	Water[3]	1 L amber round glass bottle, 33 mm pour-out neck finish. See Table B-1, Reference Number 5.	2L	If amber containers are not available, the samples should be protected from light.	Cool all samples to ≤ 6°C, but not frozen, immediately after collection. DO NOT FREEZE water samples. If residual chlorine is present, add 80 mg sodium thiosulfate/L of water.	1 year
	Soil/Sediment/Oil/ Ash/Biosolid	8 oz short, wide mouth, straight-sided, glass jar, 70 mm neck finish or 4 oz (120 mL) tall, wide mouth, straight-sided, glass jar, 48 mm neck finish. See Table B-1, Reference Numbers 3 and 4.	Fill to capacity		Cool all samples to ≤ 6°C, but not frozen, immediately after collection.	
	Tissue	Heavy duty aluminum foil as transport device. See Table B-1, Reference Number 8. 8 oz short, wide mouth, straight-sided, glass jar, 70 mm neck finish or 4 oz (120 mL) tall, wide mouth, straight-sided, glass jar, 48 mm neck finish. Reference Number 3 and 4 for homogenates tissue.	Fill to capacity		Cool all samples to ≤ 6°C, or freeze immediately after collection.	

Notes

1 Minimum volume/mass to be collected in order to ensure sample analysis can be performed.

2 This technical holding time is calculated from the time of sample collection to sample extraction. Sample extracts are to be analyzed within 40 days of extraction. It is recommended that samplers ship samples to the laboratory on the same day that they are collected, or as soon as possible thereafter.

3 Samplers must test for chlorine in aqueous samples in the field upon collection. Refer to the SAP and Appendix E for guidance.

ED_004144A_00000101-01063

APPENDIX D CLP SAMPLE COLLECTION GUIDELINES FOR SOIL VOA SAMPLES BY SW-846 METHOD 5035A AND TCLP EXTRACTION – EPA SW 846 1311, SPLP EXTRACTION EPA SW 846 1312

A. Preferred Options for the Contract Laboratory Program (CLP) are Options 1, 2, 3, and 4:

This method employs sample vials that are filled and weighed in the field and never opened during the analytical process. As a result, sampling personnel should be equipped with a portable balance capable of weighing to 0.01g.

Soil samples must be placed on their sides prior to being frozen or placed on ice. Vials are place on their side so that the septum is wet on the inside, thereby preventing vapor leaks around it, in case any bubbles form. Also, in case they freeze, you want the water to expand into the flexible septum rather than breaking the vial. Dry ice or field freezers are the only options.

Option 1.

Closed-system Vials:

Container - tared or preweighed 40 mL Volatile Organic Analysis (VOA) vial containing a magnetic stir bar.

Collect 5 g of soil per vial (iced or frozen in the field). Check the pre-tared weight of the (dry) VOA vials prior to departure for the sampling event under controlled conditions. Weigh vials and soil samples to the nearest 0.01 g. This check is to ensure that the original weight was properly recorded.

Regular Samples	3 Vials - Dry (5 g soil per vial) 1 Vial - Dry (filled with soil, no headspace) 4 Total Vials
Regular Samples Requiring QC Analysis	9Vials - Dry (5 g soil per vial) 3 Vial - Dry (filled with soil, no headspace) 12 Total Vials

Option 2.

Closed-system Vials Containing Water:

Container - tared or pre-weighed 40 mL VOA vial containing a magnetic stir bar and 5 mL water.

Collect 5 g of soil per vial (iced or frozen in the field). Weigh vials and soil samples to the nearest 0.01 g.

Regular Samples	3 Vials with water added (5 g soil and 5 mL water per vial) 1 Vial - Dry (filled with soil, no headspace) 4 Total Vials (3 with water and 1 dry)
Regular Samples Requiring QC Analysis	9 Vials with water added (5 g soil and 5 mL water per vial) 3 Vial - Dry (filled with soil, no headspace) 12 Total Vials (9 with water and 3 dry)

Option 3.

ED_004144A_00000101-01064

Container - 5 g Samplers or equivalent and coring tool used as a transport device.

All samples should be iced or frozen in the field and bagged individually.

Regular Samples	3 Samplers (5 g soil per Sampler) 1 Vial - Dry (filled with soil, no headspace) 4 Total (3 Samplers and 1 Vial)
Regular Samples Requiring QC Analysis	9 Samplers (5 g soil per Sampler) 3 Vial - Dry (filled with soil, no headspace) 12 Total (9 Samplers and 3 Vial)

Option 4.

Closed-system Vials:

Container - tared or preweighed 40 mL VOA vial.

Collect 25 g of soil per vial (iced or frozen in the field). Check the pre-tared weight of the (dry) VOA vials prior to departure for the sampling event under controlled conditions. Weigh vials and soil samples to the nearest 0.01 g. This check is to ensure that the original weight was properly recorded.

Regular Samples	4 Vials - Dry (25 g soil per vial)

B. Options 5, 6, and 7 are NOT preferred options for the CLP:

Option 5.

Closed-system Vials:

Container - tared or preweighed 40 mL VOA vial containing a magnetic stir bar and preservative.

Collect 5 g of soil per vial and add Sodium bisulfate ($NaHSO_4$) preservative (5 mL water + 1 g $NaHSO_4$) - iced in the field.

Caution: **This option is NOT a Preferred Option for the CLP because:**

$NaHSO_4$ preservation creates low pH conditions that will cause the destruction of certain CLP target analytes (e.g., vinyl chloride, trichloroethene, trichlorofluoromethane, cis- and trans-1,3-dichloropropene). Projects requiring the quantitation of these analytes should consider alternative sample preservation methods. $NaHSO_4$ also cannot be used on carbonaceous soils. Check the soil before using this method of collection! Soil can be checked by placing a test sample in a clean vial, then adding several drops of $NaHSO_4$ solution. If the soil bubbles, use Option 5b and note this issue on the TR/COC record.

Option 5a. Samples preserved in the field

Regular Samples	3 Vials with $NaHSO_4$ preservative added (5 g soil per vial) 1 Vial - Dry (filled with soil, no headspace) 4 Total Vials (3 with $NaHSO_4$ preservative and 1 without)

ED_004144A_00000101-01065

Regular Samples	6 Vials with $NaHSO_4$ preservative added (5 g soil per vial)
Requiring QC Analyses	2 Vial - Dry (filled with soil, no headspace)
	8 Total Vials (6 with $NaHSO_4$ and 2 without)

Option 5b. Samples are preserved by the laboratory (No $NaHSO_4$ preservative is added to these samples in the field).

Regular Samples	3 Vials - Dry (5 g soil per vial)
	1 Vial - Dry (filled with soil, no headspace)
	4 Total Vials

Regular Samples	6 Vials - Dry (5 g soil per vial)
Requiring QC Analyses	2 Vial - Dry (filled with soil, no headspace)
	8 Total Vials

Option 6.

Methanol Preservation (medium-level analysis only):

Container - tared or pre-weighed 40 mL VOA vials containing 5 mL methanol.

Collect 5 g of soil per vial (iced in the field).

Caution: This is NOT a preferred option for the CLP because:

Samples preserved with methanol can only be analyzed by the medium-level method. Low-level Contract Required Quantitation Limit (CRQLs) cannot be achieved when samples are preserved this way. If this soil option is used, then samples for low-level analysis by one of the other options should also be collected and accompany the medium-level soil.

Additional problems associated with use of methanol as a preservative in the field include:

- Possible contamination of the methanol by sampling-related activities (e.g., absorption of diesel fumes from sampling equipment);
- Leakage of methanol from the sample vials during shipping, resulting in loss of VOAs prior to analysis.

Regular Samples	2 Vials (5 g soil and 5 mL methanol per vial)
	1 Vial - Dry (filled with soil, no headspace)
	3 Total Vials (1 with methanol and 1 dry)

Regular Samples	6 Vials (5 g soil and 5 mL methanol per vial)
Requiring QC Analyses	1 Vial -Dry (filled with soil, no headspace)
	7 Total Vials (6 with methanol and 1 dry)

If shipping samples contain methanol as a preservative, a shipping label must be used to indicate methanol. This label must also contain the United Nations (UN) identification number for methanol (UN 1230), and indicate Limited Quantity. Refer to http://www.phmsa.dot.gov for more information about the safe shipping of methanol.

Option 7.

Glass Containers filled with sample - No Headspace:

Container - 4 oz Glass Jars.

Glass container filled with soil with no headspace and iced.

Caution: This is NOT a preferred option for the CLP because:

ED_004144A_00000101-01066

Samples collected in this manner lose most of their volatile analytes prior to analysis when the sample containers are opened and sub-sampled in the laboratory. This option is only available due to Regional requirements.

Regular Samples	2 Glass Jars (4 oz) filled with sample, no headspace 1 Vial - Dry (filled with soil, no headspace)
	3 Total Containers
Regular Samples Requiring QC Analyses	2 Glass Jars (4 oz) filled with sample, no headspace 1 Vial - Dry (filled with soil, no headspace)
	3 Total Containers

C. Caution:

1. Extreme care must be taken to ensure that frozen or iced samples do not break during shipment.
2. Before adding soil to pre-weighed vials containing a stir bar, weigh the vials to confirm the tared weight. If the weight varies by more than 0.1 g, record the new weight on the label and the sample documentation. Do NOT add labels to these vials once the tared weight has been determined or confirmed.

D. Dry Samples:

All options include taking a sample in a dry 40 mL VOA vial (or a 4 oz wide mouth jar) with no headspace. No water, $NaHSO_4$, or methanol is added to this sample. This sample is taken to determine moisture content; therefore, it does not need to be tared or have a stir bar.

E. Iced or Frozen Samples:

1. Iced means cooled to ≤6°C, but not frozen, immediately after collection.
2. Frozen means cooled to ≤ -7°C immediately after collection.
3. Dry ice is not a long-term freezing agent and may contaminate samples.

F. Sample Delivery:

CLP strongly recommends that all samples reach the laboratory by COB the next day after sample collection.

G. Notes:

1. For Options 2, 5, and 6, check the weight of the pre-tared VOA vials plus liquid in the field due to the possibility that liquid leaked out during packing, transit, or deployment in the field just prior to sampling. This check is to ensure that the original weight is properly recorded.
2. For Option 5, samples can be preserved with $NaHSO_4$ either:
   - In the field; or
   - In the laboratory upon receipt. In this case, the sampler should put the following information in the Preservation Column of the TR/COC record - "To be preserved at lab with $NaHSO_4$." This Regional request should also be communicated to SMO so that the laboratory can be notified.
3. Regional QAPPs may require the use of Option 6. Note that this option is for medium-level analysis ONLY.
4. If water, methanol, or $NaHSO_4$ preservative is added to the vials in the field, a field blank containing the appropriate liquid used in the vials should be sent to the laboratory for analysis.

ED_004144A_00000101-01067

APPENDIX E GENERAL CLP SAMPLE COLLECTION GUIDELINES VOAs IN WATER

Regional guidance and/or specific Project Plan requirements will supersede the guidelines listed below.

Collect the following:

- At least three 40 mL glass containers with polytetrafluoroethylene (PTFE)-lined septa and open top screw-caps that are filled to capacity with no air bubbles, preserved to a pH of 2 with HCl, and cooled to ≤6°C, but not frozen, immediately after collection. DO NOT FREEZE THE SAMPLES.

Regular Samples	3 vials (40 ml filled to capacity with no headspace or air bubbles)
Regular Samples Requiring QC Analysis	3 vials for Sample (40 ml filled to capacity with no headspace or air bubbles) 1 vials for MS (40 ml filled to capacity with no headspace or air bubbles) 1 vials for MSD (40 ml filled to capacity with no headspace or air bubbles)

- If Selected Ion Monitoring (SIM) analysis is requested, at least two additional 40 mL glass containers with PTFE-lined septa and open top screw-caps that are filled to capacity with no air bubbles, preserved to a pH of 2 with HCl, and cooled to ≤6°C, but not frozen, immediately after collection.

Regular Samples With SIM Analysis	3 vials for Sample (40 ml filled to capacity with no headspace or air bubbles) 2 vials (40 ml filled to capacity with no headspace or air bubbles)

Volatile Organic Analysis (VOA) Selected Ion Monitoring (SIM) analysis is only available through Modified Analysis (MA).

Test for Carbonates, Residual Chlorine, Oxidants, and Sulfides:

- It is very important that samplers obtain Regional guidance when testing and ameliorating for:
  - Carbonates;
  - Residual chlorine (e.g., municipal waters or industrial waste waters that are treated with chlorine prior to use or discharge); or
  - Oxidants.
- VOA samples containing carbonates react with the acid preservative causing effervescence (due to formation of carbon dioxide), which can cause loss of volatile analytes.
- Residual chlorine present in VOA samples can continue to react with dissolved organic matter. This continuous reaction may lead to inaccurate quantitation of certain analytes present in the sample at the time of collection.
- Residual chlorine and oxidants present in VOA samples can cause degradation of certain volatile analytes (e.g., styrene).

Perform the following for *Pre-Preserved* Vials:

1. Pour the sample slowly down the edge of the sample vial to avoid excess aeration or agitation of the sample during filling.
2. Fill the vial completely so that a reverse (convex) meniscus is present and ensure that there are no air bubbles present (either in the body or especially at the top of the vial).

ED_004144A_00000101-01068

3. Place the septum on the vial so that the PTFE side is in contact with the sample, and then firmly tighten the cap.
4. Gently flip the vial a few times to ensure that the sample is mixed with the acid preservative.
5. While holding the vial upright, gently tap the sample to check for air bubbles (either in the body or especially at the top of the vial).
6. If air bubbles are present, discard the sample and select a new vial in which to recollect a new sample. Repeat Steps 1 to 5 above.
7. Do NOT mix or composite samples for VOAs.
8. Cool sample to a temperature of ≤ 6°C, but not frozen. Samplers should begin the cooling process in the field as samples are being collected. Double-bagged ice should be used. DO NOT FREEZE WATER SAMPLES.
9. Immediately transfer the vial to the sample shuttle (device that contains a "set" of VOA vials) once it has been collected. Do NOT allow ice to touch the vials.

Perform the Following for *Empty* Vials:

1. Rinse the vial with sample water prior to actual sample collection and preservation.

Regions vary in their approach to pre-rinsing and/or re-using sample vials (e.g., some Regions do not recommend pre-rinsing and/or re-use of pre-cleaned containers using sample water). Be sure to follow Regional guidance.

2. Add 1-2 mL of acid preservative to the vial. Check to ensure that the sample you are collecting requires a preservative (follow Regional guidance).
3. Pour the sample slowly down the edge of the sample vial to avoid excess aeration and agitation of the sample.
4. Fill the vial completely so that a reverse (convex) meniscus is present and ensure that there are no air bubbles present (either in the body or especially at the top of the vial).
5. Place the septum on the vial so that the PTFE side is in contact with the sample, and then firmly tighten the cap.
6. Gently flip the vial a few times to ensure that the sample is mixed with the acid preservative.
7. While holding the vial upright, gently tap the vial to check for air bubbles (either in the body or especially at the top of the vial).
8. If air bubbles are present, discard the sample and recollect a new sample using the same sample vial. Repeat Steps 1 - 7 above.
9. Check the re-collected sample for air bubbles. If air bubbles are present, additional sample water may be added to the vial to eliminate air bubbles. If there are air bubbles after three consecutive attempts to eliminate air bubbles by the addition of sample water, the entire sample and sample vial should be discarded and a new sample collected.
10. Do NOT mix or composite samples for VOAs.
11. Cool sample to a temperature of ≤ 6°C, but not frozen. Samplers should begin the cooling process in the field as samples are being collected. Double-bagged ice should be used. DO NOT FREEZE WATER SAMPLES.
12. Immediately transfer the vial to the sample shuttle (device which contains a "set" of VOA vials) once it has been collected. Do NOT allow ice to touch the vials.

ED_004144A_00000101-01069

Things to Remember:

- Samples must be shipped as soon as possible, preferably on the same day as sample collection to avoid exceeding sample holding times. If overnight transit is not possible, samples should be maintained at ≤ 6°C, but not frozen, until they are shipped to the laboratory.
- If samples are not preserved (a requirement for certain analytes), the technical holding time is shortened to 7 days.

ED_004144A_00000101-01070

This page is intentionally left blank.

ED_004144A_00000101-01071

APPENDIX F SAMPLING TECHNIQUES AND CONSIDERATIONS

During a sampling event, the sampler is expected to follow prescribed sampling techniques. The sampler should also be aware of any special sampling considerations, contaminant issues, and sample compositing and mixing methods that could affect their sampling efforts.

Regional guidance will take precedence over any of the techniques and considerations listed below.

F.1 General Sampling Techniques

Information regarding surface water, sediment, soil, and groundwater sampling can be found in many documents including, but not limited to, the following sources:

- *Compendium of ERT Surface Water and Sediment Sampling Procedures*, EPA/540/P-91/005
- *Compendium of ERT Soil Sampling and Surface Geophysics Procedures*, EPA/540/P-91/006
- *Compendium of ERT Groundwater Sampling Procedures*, EPA/540/P-91/007
- *The Roles of Project Managers and Laboratories in Maintaining the Representativeness of Incremental and Composite Soil Samples,* EPA/OSWER 9200.1-117FS
- *Lead in Surface Wipe Samples*, NIOSH Method 9100, August 15, 1994
- *Elements on Wipes*, NIOSH Method 9102, March 15, 2003
- *Surface Wipe Sampling Procedure*, IH75190, Brookhaven National Laboratory, Industrial Hygiene Group, May 10, 2011
- Quality Assurance Sampling Plan for Environmental Response (QASPER) software, Version 4.1

When working with potentially hazardous materials, samplers should follow United States Environmental Protection Agency (EPA) and Occupational Health and Safety Administration (OSHA) requirements, specific health and safety procedures, and Department of Transportation (DOT) requirements.

F.2 Special Sampling Considerations

Samplers should refer to Regionally-developed standard operating procedures (SOPs) to obtain specific procedures for properly collecting and preserving samples in the field. For additional guidance regarding sampling for Volatile Organic Analyses (VOAs) in soil and water, see Appendixes D and E. Samplers should obtain Regional guidance when testing and ameliorating for:

- Carbonates in VOA soil and water
- Residual chlorine in VOA soil and water, or cyanide water
- Oxidants in VOA soil and water
- Sulfides and oxidizing agents in cyanide

F.3 Contaminant Sampling

Certain compounds can be detected in the parts-per-billion (ppb) and/or parts-per-trillion (ppt) range. Extreme care MUST be taken to prevent cross-contamination of these samples. The following precautions should be taken when trace contaminants are a concern:

- Disposable gloves should be worn each time a different location is sampled.

ED_004144A_00000101-01072

- When collecting both surface water and sediments, surface water samples should be collected first. This reduces the chance of sediment dispersal into surface water, and the resulting loss of surface water sample integrity.
- Sampling should occur in a progression from the least to the most contaminated area, if this information is known to the sampling team.
- Samplers should use equipment constructed of polytetrafluoroethylene (PTFE), stainless steel, or glass that has been properly pre-cleaned for the collection of samples for trace organic and/or inorganic analyses. Equipment constructed of plastic or polyvinyl chloride (PVC) should NOT be used to collect samples for trace organic compound analyses.
- Equipment constructed of stainless steel should NOT be used to collect samples for trace metals analyses.

F.4 Sample Compositing

Sample compositing is a site-specific activity that must be conducted according to the Site Activity Plan (SAP). Compositing is typically used for large sites under investigation to improve the precision (i.e., lower the variance) of the estimated average contaminant concentrations. **Samples for VOA analysis should NOT be composited to minimize loss of VOAs/analytes.**

Composite samples consist of a series of discrete grab samples that are mixed together to characterize the average composition of a given material. The discrete samples are usually of equal volume, but may be weighted to reflect an increased flow or volume. Regardless, all discrete samples must be collected in an identical manner and the number of grab samples forming a composite should be consistent. There are several compositing techniques that may be required such as:

- Flow-proportioned - Collected proportional to the flow rate during the compositing period by either a time-varying/constant volume or a time-constant/varying volume method. This technique is usually associated with wastewater or storm water runoff sampling.
- Time - Composed of a varying number of discrete samples collected at equal time intervals during the compositing period. This technique is typically used to sample wastewater and streams, and in some air sampling applications.
- Areal - Collected from individual grab samples collected in an area or on a cross-sectional basis. Areal composites are comprised of equal volumes of grab samples where all grabs are collected in an identical manner. This technique is typically used for estimating average contaminant concentrations in soils or sediments. This technique is useful when contaminants are present in nugget form (i.e., TNT chunks, lead shot, etc.), thus exhibiting large differences in concentration over a small sample area.
- Vertical - Collected from individual grab samples but taken from a vertical cross section. Vertical composites are comprised of equal volumes of grab samples where all grab samples are collected in an identical manner. Examples would include vertical profiles of a soil borehole or sediment columns.
- Volume - Collected from discrete samples whose aliquot volumes are proportional to the volume of sampled material. Volume composites are usually associated with hazardous waste bulking operations where the sample represents combined or bulked waste.

When compositing solid or tissue samples (i.e., sediment, soil, or sludge) for analysis of compounds present in trace quantities, use a stainless steel or PTFE bowl and spatula.

F.5 Sample Mixing and Homogenizing

Mixing of the sample for the remaining parameters is necessary to create a representative sample media. It is extremely important that solid samples be mixed as thoroughly as possible to ensure that the sample is as representative as possible of the sample location. Refer to the project-specific SAP regarding instructions on removal of any extraneous materials (e.g., leaves, sticks, rocks, etc.). The mixing technique will depend on the physical characteristics of the solid material (e.g., particle size, moisture content, etc.). (Grinding and homogenization of tissue is easier when it is partially

ED_004144A_00000101-01073

frozen.) The mixing container should be large enough to hold the sample volume and accommodate the procedures without spilling. Both the mixing container (generally a bowl or tray) and the mixing implement should be properly decontaminated before use. Samples should be homogenized according to procedures listed in the project-specific SAP. Table F-1 provides a short procedure for mixing a soil sample with a small particle size (less than 1/4 in) and filling sample containers in the field.

Table F-1. Mixing a Sample and Filling Sample Containers

Step	Action
1	Roll the contents of the compositing container to the middle of the container and mix.
2	Quarter the sample and move to the sides of the container.
3	Mix each quarter individually, then combine and mix OPPOSITE quarters, then roll to the middle of the container.
4	Mix the sample once more, and then quarter the sample again.
5	Mix each quarter individually, then combine and mix ADJACENT corners, then roll to the middle of the container. The goal is to achieve a consistent physical appearance before sample containers are filled.
6	Flatten piled material into an oblong shape.
7	Using a flat-bottomed scoop, collect a strip of soil across the entire width of the short axis and place it into a sample container.
8	Repeat Step 7 at evenly-spaced intervals until the sample containers are filled.
9	Record the approximate quantity of each subsample in the field log book.

ED_004144A_00000101-01074

This page is intentionally left blank.

ED_004144A_00000101-01075

APPENDIX G INTERNATIONAL SHIPPING

The following section provides information on shipping Contract Laboratory Program (CLP) samples to laboratories outside the United States.

G.1 United Parcel Service (UPS) Procedure for Shipping to Canada

1. Introduction

The Standard Operating Plan (SOP) defines the responsibilities and procedures for shipping to Canada labs. This document covers the export shipping process.

2. Overview

UPS will provide pick-up and delivery service for small package (weighing less than 150 lbs. each) shipments to labs in Canada. This document outlines the requirements and processes with regards to these export shipments.

3. Contact Information

UPS Strategic Support for Government Accounts	1.800.877.1497/ www.strategicsupport.com
UPS International Customer Service	1.800.782.7892/ www.ups.com/international
Shelly O'Leary, UPS Account Manager for EPA	404.402.9827/ shellyoleary@ups.com

4. Product Profile

Service Level – Under WWX5, EPA receives government pricing for shipments via UPS *Worldwide Express Saver* service. This service provides guaranteed delivery within 1 – 3 business days, by end of day, to Canada. The maximum weight per package is 150 lbs. (70 kg.), maximum length is 108 in. (270 cm.) per package and the maximum dimensions are 165.0 in. (419.10 cm) per package, length and girth combined.

5. Commercial Invoice

A commercial invoice form is used for all shipments containing non-documents. The commercial invoice is the primary document used for importation control, valuation, and duty determination. This document identifies the products being shipped.

The form should include:

- Complete name and address information for both shipper and consignee
- **Phone numbers** for both shipper and consignee
- Terms of Sale (Incoterm)
- Reason for export
- A complete description of the item
- What is the item?
- What is the item used for?
- Harmonized Tariff Codes, if known
- Country of origin (where manufactured) for each commodity
- Number of units, unit value, and total value (purchase price) of each item
- Number of packages and total weight
- Shipper's signature and date

ED_004144A_00000101-01076

- A nominal or fair market value must be stated for items of no commercial value

Commercial Invoice Template –

Invoice

Page 1

From

Tax ID/VAT No.:
Contact Name:
Company Name:
Address:
City State/Province:
Postal Code Country/Territory:
Phone:

Waybill Number: Shipment ID:
Date:
Invoice Number (Reference 1):
Purchase Order Number (Reference 2):
Terms of Sale (Incoterms):
Reason for Export:

Ship To

Tax ID/VAT No.:
Contact Name:
Company Name:
Address:
City State/Province:
Postal Code Country/Territory:
Phone:

Sold To

Tax ID/VAT Number:
Contact Name:
Company Name:
Address:
City State/Province:
Postal Code Country/Territory:
Phone:

Units	UM	Description of Goods/Part Number	Harmonized Code	C/O	Unit Value	Total Value	Currency

Additional Comments:

Declaration Statement:

Invoice Line total:
Discount/Rebate:
Invoice Sub-Total:
Freight:
Insurance:
Other:
Currency
Total invoice amount:

Shipper's Signature / Title: Date: Total Number of Packages:
Total Weight:

These commodities, technology, or software were exported from the United States in accordance with the Export Administration Regulation.Diversion contrary to U.S. law is prohibited.

Figure G-1. Commercial Invoice Template

ED_004144A_00000101-01077

6. Packing with Coolants and Refrigerants (Dry Ice)

Coolants and refrigerants are used to keep temperature-sensitive products cold or frozen while in transit. Dry ice (frozen carbon dioxide) and gel packs are the most common types of coolant / refrigerants used for transportation.

International Air Shipments Containing Dry Ice

International **Air** shipments containing dry ice require the shipper to have a UPS International Special Commodities contract. For more information, please contact the UPS Hazardous Materials Support Center at 1-800-554-9964, or visit our online UPS Guide for Shipping International Dangerous Goods.

View UPS Guide for Shipping International Dangerous Goods

International Dry Ice Packages Shipped via Air Service Require the Following Under IATA:

- Process through WorldShip 2008 version 10.0 (or higher), CampusShip or compliant software
- An acceptance audit is performed
- Mark the outer carton with:
  - The words "Dry Ice" of "Carbon Dioxide, Solid" and "UN1845"
  - The amount of dry ice contained in the package in KG
  - Class 9 Diamond label

Requirements for Preparing Your Dry Ice Shipments:

- Fill any empty space in your package with appropriate packing material to prevent product movement in transit.
- Wrap temperature-sensitive products in two watertight plastic bags or use absorbent material along with a plastic liner.
- Avoid shipping temperature-sensitive products over the weekend.
- Wrap the refrigerant in paper or another carton to slow the melting rate and prevent excess space when using dry ice.
- Do not place the refrigerant at the bottom of the package because cold air will not circulate.
- Do not seal the inner insulated container when using dry ice. Venting is required to allow some carbon dioxide gas to escape the package.

* UPS CampusShip is a web-based, UPS-hosted shipping solution that helps to increase efficiency and reduce costs. See QuickStart Guide, July 2010, links following below.

7. Additional Information

Common items that may be hazardous and require the shipper to have a UPS International Special Commodities contract. For more information, please contact the UPS Hazardous Materials Support Center at 1-800-554-9964, or visit our online UPS Guide for Shipping International Dangerous Goods.

Descriptions that Indicate Dangerous Goods – watch for any of the following descriptions that could indicate Dangerous Goods or Hazardous Materials:

- Acidic
- Caustic
- Combustible Communicable
- Compressed Gas
- Corrosive
- Explosive
- Flammable
- Infectious
- Inflammable
- Poison
- Radioactive
- Refrigerated

ED_004144A_00000101-01078

- Toxic
- Volatile

Note: This is only a sampling of trigger terms which should prompt further questions about a shipment. There are many more, and it is hoped that seeing these will lead you to think about other general terms that may warrant further investigation.

8. Tools and Resources

UPS Global - http://global.ups.com/international-shipping-cost/

Access UPS Global website to get up-to-date information on everything international, including information on how to prepare an international shipment, track your package, import/export country regulations and international forms.

How to Process International Package using UPS CampusShip

http://www.ups.com/media/en/CampusShip_admin_QuickStart_Guide.pdf
http://www.ups.com/media/en/CampusShip_shipping_QuickStart_Guide.pdf

Step-by-Step Instructions for International Shipping

Step 1. Verify That Your Commodity Can Be Shipped

Determine if service restrictions apply to either your country of origin or country of destination.

Check for Embargoed/Suspended Service

Verify that your commodity can be shipped to or from the United States and a specific country.

Check List of UPS Export Prohibited Articles

Step 2. Select an International Service If price and time are your primary considerations in selecting an international service, use the Service Comparison tool on UPS CampusShip to find the guaranteed delivery time and price of every service available to and from the United States and a specific country.

Step 3. Choose an International Billing Option

UPS international billing options give you the flexibility to bill charges in a way that best suits your business model. Whichever option you select, you can be assured that UPS will accurately bill your international charges.

Learn More About International Billing Options

Step 4. Create Required Documentation

Find out what export documentation is required for your shipments and how to complete each form.

Learn How to Create Documentation

Step 5. Prepare Your Shipment

Use the following resources to learn more about preparing your shipment.

Learn How to Prepare Your International Shipment
Learn What Packing Materials to Use for Your International Shipment
Identify Specific Weight and Size Limitations
Convert the Weight, Length, Area, and Volume of Your Shipment

Decide whether to declare a value for high value items. UPS's liability is limited to US$100.00 for loss or damage on domestic or international packages with no declared value. If the value of your goods exceeds US$100.00, you can declare a higher value, up to US$50,000.00 per package. For packages that exceed the maximum declared value, a waiver must be obtained. Refer to the applicable terms and conditions of service for additional limits and restrictions.

Learn More About Declared Value

ED_004144A_00000101-01079

Step 6. Ship Your Package

Use UPS CampusShip or Internet Shipping on ups.com to prepare your international shipping label and the international forms required for certain shipments.

Step 7. Get Your Shipment to UPS

If you don't have an automatic scheduled pickup, UPS On-Call Pickup® gives you the convenience of having shipments picked up at your location. With one pickup request, UPS will pick up all ground, air, and international shipments. UPS On-Call Pickup can be scheduled at ups.com or by calling 1-800-PICK-UPS®. A pickup may be scheduled for the same day or a future day. Or you can conveniently ship your UPS package at one of our thousands of locations including The UPS Store® and UPS Drop Boxes.

Find Locations

Step 8. Check Your Shipment Status

Since every UPS package is assigned a unique tracking number, you can access information about your shipments whenever you like, and as often as you like. Tracking information about your shipments is always available at ups.com, by e-mail, and through optional services.

Track Your Shipment
Learn About More Ways to Track

G.2 Completed Customs Forms Example

Shipping samples to an international laboratory requires the completion of a customs form. The following is an example of a correctly completed customs form for shipment to a laboratory in Canada.

DEPARTMENT OF HOMELAND SECURITY
U.S. Customs and Border Protection

OMB No. 1651-0098
Exp. 08-31-2014

NORTH AMERICAN FREE TRADE AGREEMENT
CERTIFICATE OF ORIGIN

19 CFR 181.11, 181.22 Bill of Lading / Air Waybill No. A99F95V/KRSL

1. EXPORTER NAME AND ADDRESS US EPA 980 COLLEGE STATION RD ATHENS, GA 30605 United States TAX IDENTIFICATION NUMBER: 11-1111111	2. BLANKET PERIOD FROM 12/MAY/2014 TO 13/MAY/2014
3. PRODUCER NAME AND ADDRESS XYZ Laboratory 530 St. Clair Ave W TORONTO, ON M6C0A2 Canada TAX IDENTIFICATION NUMBER: 99-9999999	4. IMPORTER NAME AND ADDRESS XYZ Laboratory 530 St. Clair Ave W TORONTO, ON M6C0A2 Canada TAX IDENTIFICATION NUMBER: 99-9999999

5. DESCRIPTION OF GOOD(S)	6. HS TARIFF CLASSIFICATION NUMBER	7. PREFERENCE CRITERION	8. PRODUCER	9. NET COST	10. COUNTRY OF ORIGIN
Infiltrex Water Sampler Stainless Steel Columns w 250g XAD resin (adsorbent)Scientific Testing Only	HS Code 9015.90	A	NO(1)	NO	CA
Wound Glass fiber filter catridges with samples for Scientific Testing Only. Not for resale, no com value	HS Code 9015.90	A	NO(1)	NO	CA

I CERTIFY THAT:

- THE INFORMATION ON THIS DOCUMENT IS TRUE AND ACCURATE AND I ASSUME THE RESPONSIBILITY FOR PROVIDING SUCH REPRESENTATIONS. I UNDERSTAND THAT I AM LIABLE FOR ANY FALSE STATEMENTS OR MATERIAL OMISSIONS MADE ON OR IN CONNECTION WITH THIS DOCUMENT;
- I AGREE TO MAINTAIN AND PRESENT UPON REQUEST, DOCUMENTATION NECESSARY TO SUPPORT THIS CERTIFICATE, AND TO INFORM, IN WRITING, ALL PERSONS TO WHOM THE CERTIFICATE WAS GIVEN OF ANY CHANGES THAT COULD AFFECT THE ACCURACY OR VALIDITY OF THIS CERTIFICATE;
- THE GOODS ORIGINATED IN THE TERRITORY OF ONE OR MORE OF THE PARTIES, AND COMPLY WITH THE ORIGIN REQUIREMENTS SPECIFIED FOR THOSE GOODS IN THE NORTH AMERICAN FREE TRADE AGREEMENT AND UNLESS SPECIFICALLY EXEMPTED IN ARTICLE 411 OR ANNEX 401, THERE HAS BEEN NO FURTHER PRODUCTION OR ANY OTHER OPERATION OUTSIDE THE TERRITORIES OF THE PARTIES; AND
- THIS CERTIFICATE CONSISTS OF 2 PAGES, INCLUDING ALL ATTACHMENTS.

11.	11a. AUTHORIZED SIGNATURE		11b. COMPANY	
	11c. NAME		11d. TITLE	
	11e. DATE	11f. TELEPHONE NUMBER ▶	(Voice)	(Facsimile)

CBP Form 434 (04/11)

Figure G-2. International Shipping Form (1 of 6)

ED_004144A_00000101-01081

PAPERWORK REDUCTION ACT STATEMENT: An agency may not conduct or sponsor an information collection and a person is not required to respond to this information unless it displays a current valid OMB control number and an expiration date. The control number for this collection is 1651-0098. The estimated average time to complete this application is 15 minutes. If you have any comments regarding the burden estimate you can write to U.S. Customs and Border Protection, Office of Regulations and Rulings, 799 9th Street, NW., Washington DC 20229.

NORTH AMERICAN FREE TRADE AGREEMENT CERTIFICATE OF ORIGIN INSTRUCTIONS

For purposes of obtaining preferential tariff treatment, this document must be completed legibly and in full by the exporter and be in the possession of the importer at the time the declaration is made. This document may also be completed voluntarily by the producer for use by the exporter. Please print or type:

FIELD 1: State the full legal name, address (including country) and legal tax identification number of the exporter. Legal taxation number is: In Canada, employer number or importer/exporter number assigned by Revenue Canada; in Mexico, federal taxpayer's registry number (RFC); and in the United States, employer's identification number or Social Security Number.

FIELD 2: Complete field if the Certificate covers multiple shipments of identical goods as described in Field #5 that are imported into a NAFTA country for a specified period of up to one year (the blanket period). "FROM" is the date upon which Certificate becomes applicable to the good covered by the blanket Certificate (it may be prior to the date of signing this Certificate). "TO" is the date upon which the blanket period expires. The importation of a good for which preferential treatment is claimed based on this Certificate must occur between these dates.

FIELD 3: State the full legal name, address (including country) and legal tax identification number, as defined in Field #1, of the producer. If more than one producer's good is included on the Certificate, attach a list of additional producers, including the legal name, address (including country) and legal tax identification number, cross-referenced to the good described in Field #5. If you wish this information to be confidential, it is acceptable to state "Available to CBP upon request". If the producer and the exporter are the same, complete field with "SAME". If the producer is unknown, it is acceptable to state "UNKNOWN".

FIELD 4: State the full legal name, address (including country) and legal tax identification number, as defined in Field #1, of the importer. If the importer is not known, state "UNKNOWN"; if multiple importers, state "VARIOUS".

FIELD 5: Provide a full description of each good. The description should be sufficient to relate it to the invoice description and to the Harmonized System (H.S.) description of the good. If the Certificate covers a single shipment of a good, include the invoice number as shown on the commercial invoice. If not known, indicate another unique reference number, such as the shipping order number.

FIELD 6: For each good described in Field #5, identify the H.S. tariff classification to six digits. If the good is subject to a specific rule of origin in Annex 401 that requires eight digits, identify to eight digits, using the H.S. tariff classification of the country into whose territory the good is imported.

FIELD 7: For each good described in Field #5, state which criterion (A through F) is applicable. The rules of origin are contained in Chapter Four and Annex 401. Additional rules are described in Annex 703.2 (certain agricultural goods), Annex 300-B, Appendix 6 (certain textile goods) and Annex 308.1 (certain automatic data processing goods and their parts). NOTE: In order to be entitled to preferential tariff treatment, each good must meet at least one of the criteria below.

Preference Criteria

A The good is "wholly obtained or produced entirely" in the territory of one or more of the NAFTA countries as referenced in Article 415. Note: The purchase of a good in the territory does not necessarily render it "wholly obtained or produced". If the good is an agricultural good, see also criterion F and Annex 703.2. *(Reference: Article 401(a) and 415)*

B The good is produced entirely in the territory of one or more of the NAFTA countries and satisfies the specific rule of origin, set out in Annex 401, that applies to its tariff classification. The rule may include a tariff classification change, regional value-content requirement, or a combination thereof. The good must also satisfy all other applicable requirements of Chapter Four. If the good is an agricultural good, see also criterion F and Annex 703.2. *(Reference: Article 401(b))*

C The good is produced entirely in the territory of one or more of the NAFTA countries exclusively from originating materials. Under this criterion, one or more of the materials may not fall within the definition of "wholly produced or obtained", as set out in article 415. All materials used in the production of the good must qualify as "originating" by meeting the rules of Article 401(a) through (d). If the good is an agricultural good, see also criterion F and Annex 703.2. *Reference: Article 401(c).*

D Goods are produced in the territory of one or more of the NAFTA countries but do not meet the applicable rule of origin, set out in Annex 401, because certain non-originating materials do not undergo the required change in tariff classification. The goods do nonetheless meet the regional value-content requirement specified in Article 401(d). This criterion is limited to the following two circumstances:

1. The good was imported into the territory of a NAFTA country in an unassembled or disassembled form but was classified as an assembled good, pursuant to H.S. General Rule of Interpretation 2(a), or
2. The good incorporated one or more non-originating materials, provided for as parts under the H.S., which could not undergo a change in tariff classification because the heading provided for both the good and its parts and was not further subdivided into subheadings, or the subheading provided for both the good and its parts and was not further subdivided.

NOTE: This criterion does not apply to Chapters 61 through 63 of H.S. *(Reference: Article 401(d))*

E Certain automatic data processing goods and their parts, specified in Annex 308.1, that do not originate in the territory are considered originating upon importation into the territory of a NAFTA country from the territory of another NAFTA country when the most-favored-nation tariff rate of the good conforms to the rate established in Annex 308.1 and is common to all NAFTA countries. *(Reference: Annex 308.1)*

F The good is an originating agricultural good under preference criterion A, B, or C above and is not subject to a quantitative restriction in the importing NAFTA country because it is a "qualifying good" as defined in Annex 703.2, Section A or B (please specify). A good listed in Appendix 703.2B.7 is also exempt from quantitative restrictions and is eligible for NAFTA preferential tariff treatment if it meets the definition of "qualifying good" in Section A of Annex 703.2. NOTE 1: This criterion does not apply to goods that wholly originate in Canada or the United States and are imported into either country. NOTE 2: A tariff rate quota is not a quantitative restriction.

FIELD 8: For each good described in Field #5, state "YES" if you are the producer of the good. If you are not the producer of the good, state "NO" followed by (1), (2), or (3), depending on whether this certificate was based upon: (1) your knowledge of whether the good qualifies as an originating good; (2) your reliance on the producer's written representation (other than a Certificate of Origin) that the good qualifies as an originating good; or (3) a completed and signed Certificate for the good, voluntarily provided to the exporter by the producer.

FIELD 9: For each good described in field #5, where the good is subject to a regional value content (RVC) requirement, indicate "NC" if the RVC is calculated according to the net cost method; otherwise, indicate "NO". If the RVC is calculated over a period of time, further identify the beginning and ending dates (MM/DD/YYYY) of that period. *(Reference: Article 402.1, 402.5).*

FIELD 10: Identify the name of the country ("MX" or "US" for agricultural and textile goods exported to Canada; "US" or "CA" for all goods exported to Mexico; or "CA" or "MX" for all goods exported to the United States) to which the preferential rate of CBP duty applies, as set out in Annex 302.2, in accordance with the Marking Rules or in each party's schedule of tariff elimination.
For all other originating goods exported to Canada, indicate appropriately "MX" or "US" if the goods originate in that NAFTA country, within the meaning of the NAFTA Rules of Origin Regulations, and any subsequent processing in the other NAFTA country does not increase the transaction value of the goods by more than seven percent; otherwise indicate "JNT" for joint production. *(Reference: Annex 302.2)*

FIELD 11: This field must be completed, signed, and dated by the exporter. When the Certificate is completed by the producer for use by the exporter, it must be completed, signed, and dated by the producer. The date must be the date the Certificate was completed and signed.

CBP Form 434 (04/11)

Figure G-3. International Shipping Form (2 of 6)

ED_004144A_00000101-01082

UPS EEI DATA

1a. U.S. PRINCIPAL PARTY IN INTEREST (USPPI) (Complete name and address) US EPA 950 COLLEGE STATION RD ATHENS, GA, United States ZIP CODE: 30605	Shipper Number: 2. DATE OF EXPORTATION: 30/JUN/2014 3. TRANSPORTATION REFERENCE NO.: A99F99VKR9L
b. USPPI's EIN (IRS) OR ID NO.: 11-1111111 c. PARTIES TO TRANSACTION: [ ] Related [X] Non-related 4a. ULTIMATE CONSIGNEE (Complete name and address) XYZ Laboratory 530 St. Clair Ave W TORONTO, ON, M6C0A2, Canada ULTIMATE CONSIGNEE TYPE: O	
5. INTERMEDIATE CONSIGNEE (Complete name and address) Same as Ultimate Consignee	
5a. FORWARDING AGENT (Complete name and address) UPS 55 UPS Parkway NE Atlanta, GA, 30328, United States	
5b. FORWARDING AGENT'S EIN (IRS) NO.: 33-3333333	6. POINT (STATE) OF ORIGIN OR FTZ LOCATION ID: GA 7. COUNTRY OF ULTIMATE DESTINATION: Canada
8. LOADING PIER (Ocean only) 9. METHOD OF TRANSPORTATION (Specify): Air	14. CARRIER IDENTIFICATION CODE: 5X 15. SHIPMENT REFERENCE NO.: A99F99VKR9L
10. EXPORTING CARRIER: UPS 11. PORT OF EXPORT: 0901	16. IN BOND NUMBER: 17. HAZARDOUS MATERIALS: [ ] Yes [X] No
12. PORT OF UNLOADING (Ocean and Air only) 13. CONTAINERIZED (Ocean only): [ ] Yes [X] No	18. IN BOND NUMBER TYPE: 70 19. ROUTED EXPORT TRANSACTION: [ ] Yes [X] No

20. SCHEDULE B DESCRIPTION OF COMMODITIES (Use separate 22-24)

B/C	Export Information Code	SP (21)	SCHEDULE B NUMBER (22)	QUANTITY - SCHEDULE B UNIT(S) and UOM (23)	SHIPPING WEIGHT IN KILOS (24)	VIN/PRODUCT NUMBER/ VEHICLE TITLE NUMBER (25)	VALUE IN U.S. DOLLARS (26)
	QP	X	Infiltrex Water Sampler Stainless Steel Columns w 250g XAD resin (adsorbent) Scientific Testing Only Schedule B: 9015900000 License/Exception/Exemption Number: NLR	10 / NO	34.99		6,700
	QP	X	Wound Glass fiber filter cartridges with samples for Scientific Testing Only. Not for resale, no com value Schedule B: 9015900000 License/Exception/Exemption Number: NLR	3 / NO	11.11		41

27. I certify that all statements made and all information contained herein are true and correct and that I have read and understand the instructions for preparation of this document, set forth in the "Foreign Trade Regulations (FTR)(15 CFR 30)." I understand that civil and criminal penalties, including forfeiture and sale, may be imposed for making false or fraudulent statements herein, failing to provide the requested information or for violation of U.S. laws on exportation (13 U.S.C. Sec. 305; 22 U.S.C. Sec. 401; 18 U.S.C. Sec. 1001; 50 U.S.C. App. 2410).

Signature	Confidential - For use solely for official purposes authorized by the Secretary of Commerce (13 U.S.C., 301 (g)).
Title	Export shipments are subject to inspection by U.S. Customs and Border Protection and/or Office of Export Enforcement.
Date	The USPPI authorizes the forwarder named above to act as a forwarding agent for export control and customs purposes.
Telephone No. (Include area code)	E-mail address

Page 1

Figure G-4. International Shipping Form (3 of 6)

Invoice

Page 1

FROM	
Tax ID/EIN/VAT No.: 11-1111111 Contact Name: Bob Smith US EPA 980 COLLEGE STATION RD ATHENS, GA 30605 United States Phone: 7065551212	Waybill Number A99F99VKR9L Shipment ID: A99F99VKR9L Date: 30/JUL/2014 Invoice No: PO No: Terms of Sale (Incoterm): Reason for Export: Point of Origin: GA UPS to File AES: Y Other Government Agency License or Permit: C33
SHIP TO	SOLD TO INFORMATION
Tax ID/VAT No.: 99-9999999 Contact Name:Sample Receiving XYZ Laboratory 530 St. Clair Ave W TORONTO, ON M6C0A2 Canada Phone: 4165551212	Tax ID/VAT No.:99-9999999 Contact NameSample Receiving XYZ Laboratory 530 St. Clair Ave W TORONTO, ON M6C0A2 Canada Phone:4165551212

Units	U/M	Description of Goods/Part No. Exception	Harm. Code	C/O	Unit Value	Total Value
10	NMB	Infiltrex Water Sampler Stainless Steel Columns w 250g XAD resin (adsorbent)Scientific Testing Only NLR	HS Code 9015.90	CA	870.00	8,700.00
5	NMB	Wound Glass fiber filter catridges with samples for Scientific Testing Only. Not for resale, no com value. NLR	HS Code 9015.90	CA	8.25	41.25

Additional Comments:

Declaration Statement:
Canadian Goods returned. Nor for Resale, No Commercial Value, Scientific Testing Only. These commodities are licensed for the ultimate destination shown. Diversion contrary to United Stses Law is Prohibited. I Declare all the information contained in this invoice to be true and correct.

Shipper Date

Invoice Line Total:	8,741.25
Discount/Rebate:	0.00
Invoice Sub-Total:	8,741.25
Freight:	0.00
Insurance:	0.00
Other:	0.00
Total Invoice Amount:	8,741.25

Total Number of Packages: 3 Currency: USD
Total Weight: 101.5 LBS

These commodities, technology or software were exported from the United States in accordance with the Export Administration Regulations. Diversion contrary to U.S. law prohibited.

Figure G-5. International Shipping Form (4 of 6)

ED_004144A_00000101-01084

Invoice

Page 1

FROM	
Tax ID/EIN/VAT No.: 11-1111111 Contact Name: Bob Smith US EPA 980 COLLEGE STATION RD ATHENS, GA 30605 United States Phone: 7065551212	Waybill Number A99F99VKR9L Shipment ID: A99F99VKR9L Date: 30/JUL/2014 Invoice No: PO No: Terms of Sale (Incoterm): Reason for Export: Point of Origin: GA UPS to File AES: Y Other Government Agency License or Permit: C33
SHIP TO	SOLD TO INFORMATION
Tax ID/VAT No.: 99-9999999 Contact Name:Sample Receiving XYZ Laboratory 530 St. Clair Ave W TORONTO, ON M6C0A2 Canada Phone: 4165551212	Tax ID/VAT No.:99-9999999 Contact NameSample Receiving XYZ Laboratory 530 St. Clair Ave W TORONTO, ON M6C0A2 Canada Phone:4165551212

Units	U/M	Description of Goods/Part No. Exception	Harm. Code	C/O	Unit Value	Total Value
10	NMB	Infiltrex Water Sampler Stainless Steel Columns w 250g XAD resin (adsorbent)Scientific Testing Only NLR	HS Code 9015.90	CA	870.00	8,700.00
5	NMB	Wound Glass fiber filter catridges with samples for Scientific Testing Only. Not for resale, no com value. NLR	HS Code 9015.90	CA	8.25	41.25

Additional Comments:

Declaration Statement:
Canadian Goods returned. Nor for Resale, No Commercial Value, Scientific Testing Only. These commodities are licensed for the ultimate destination shown. Diversion contrary to United Stses Law is Prohibited. I Declare all the information contained in this invoice to be true and correct.

Shipper Date

Invoice Line Total:	8,741.25
Discount/Rebate:	0.00
Invoice Sub-Total:	8,741.25
Freight:	0.00
Insurance:	0.00
Other:	0.00
Total Invoice Amount:	8,741.25

Total Number of Packages: 3 Currency: USD
Total Weight: 101.5 LBS

These commodities, technology or software were exported from the United States in accordance with the Export Administration Regulations. Diversion contrary to U.S. law prohibited.

Figure G-6. International Shipping Form (5 of 6)

ED_004144A_00000101-01085

Invoice

Page 1

FROM	
Tax ID/EIN/VAT No.: 11-111111 Contact Name: Bob Smith US EPA 980 COLLEGE STATION RD ATHENS, GA 30605 United States Phone: 7065551212	Waybill Number A99F99VKR9L Shipment ID: A99F99VKR9L Date: 30/JUL/2014 Invoice No: PO No: Terms of Sale (Incoterm): Reason for Export: Point of Origin: GA UPS to File AES: Y Other Government Agency License or Permit: C33
SHIP TO	SOLD TO INFORMATION
Tax ID/VAT No.: 99-9999999 Contact Name:Sample Receiving XYZ Laboratory 530 St. Clair Ave W TORONTO, ON M6C0A2 Canada Phone: 4165551212	Tax ID/VAT No.:99-9999999 Contact NameSample Receiving XYZ Laboratory 530 St. Clair Ave W TORONTO, ON M6C0A2 Canada Phone:4165551212

Units	U/M	Description of Goods/Part No. Exception	Harm. Code	C/O	Unit Value	Total Value
10	NMB	Infiltrex Water Sampler Stainless Steel Columns w 250g XAD resin (adsorbent)Scientific Testing Only NLR	HS Code 9015.90	CA	870.00	8,700.00
5	NMB	Wound Glass fiber filter catridges with samples for Scientific Testing Only. Not for resale, no com value. NLR	HS Code 9015.90	CA	8.25	41.25

Additional Comments:

Declaration Statement:
Canadian Goods returned. Not for Resale, No Commercial Value, Scientific Testing Only. These commodities are licensed for the ultimate destination shown. Diversion contrary to United Stses Law is Prohibited. I Declare all the information contained in this invoice to be true and correct.

Shipper Date

Invoice Line Total:	8,741.25
Discount/Rebate:	0.00
Invoice Sub-Total:	8,741.25
Freight:	0.00
Insurance:	0.00
Other:	0.00
Total Invoice Amount:	8,741.25

Total Number of Packages: 3 Currency: USD
Total Weight: 101.5 LBS

These commodities, technology or software were exported from the United States in accordance with the Export Administration Regulations. Diversion contrary to U.S. law prohibited.

Figure G-7. International Shipping Form (6 of 6)

ED_004144A_00000101-01086

Table H-1: Personnel Preparation Checklist

(Page 1 of 1)

Personnel Briefing	Yes	No	Comments
1. Did you review sampling team responsibilities and identify individual(s) responsible for corrective actions?			
2. Did you ensure that you have met the appropriate personal safety and protection requirements?			
3. Did you identify sampling locations and receive permission to access them, as appropriate?			
4. Did you contact the appropriate utility companies PRIOR to the start of sampling? By law, utility companies must be contacted prior to the start of digging/sampling so that any underground utilities (gas lines, water lines, electrical lines, etc.) can be marked. A list of one-call centers for each state may be found at: http://www.call811.com.			
5. If sampling on private property, do you have sample receipts to provide to the property owner for all samples taken and removed from the property?			
6. Have you determined the number and type of samples to be collected?			
7. Did you review sample collection methods?			
8. Have you reviewed sample container requirements?			
9. Did you review decontamination requirements, procedures, and locations?			
10. Did you determine holding times and conditions?			
11. Did you determine Performance Evaluation (PE) and Quality Control (QC) sample requirements?			
12. Have you obtained shipping cooler temperature blanks, if required?			
13. Did you review sample label and tag requirements?			
14. Did you review Traffic Report/Chain of Custody (TR/COC) record and custody seal requirements?			
15. Have you obtained the laboratory name, shipping addresses, and telephone number?			
16. Did you review cooler return instructions?			
17. Have you obtained shipping company information (name, telephone number, account number, pickup schedule)?			
18. Have you obtained shipping schedules?			
19. Did you review shipment reporting requirements and the appropriate contact names and telephone numbers for reporting?			

ED_004144A_00000101-01088

Personnel Briefing	Yes	No	Comments
20. Have you included any sampler comments regarding sampling issues (e.g., low volumes, matrix, suspected concentrations based on field measurements)?			

ED_004144A_00000101-01089

Table H-2: General Sample Collection Checklist

(Page 1 of 1)

General Sample Collection	Yes	No	Comments
1. Did you identify and mark the sampling location with buoys, flags, or stakes according to the sampling plans, maps, and grids?			
2. If the sampling location is inaccessible, did you contact the appropriate field or Regional personnel for instructions?			
3. Did you use the correct sampling equipment?			
4. Did you follow the correct decontamination procedures?			
5. Did you follow the correct collection procedures?			
6. Did you use the correct sample containers for each sample collected?			
7. Did you use certified clean containers for all samples? Are certificates kept on record?			
8. Did you use certified clean water for all field, trip, equipment and rinsate blanks? Are certificates kept on record?			
9. Did you collect the correct volume for each sample?			
10. Did you collect the correct type of sample, including primary samples and Quality Control (QC) samples?			
11. Did you properly preserve each sample collected?			
12. Did you correctly document and label each sample with all necessary information? Under no circumstances should the site name appear on any documentation being sent to the laboratory, unless the laboratory is a Regional U.S. Environmental Protection Agency (EPA) laboratory. Then the Region copy of the TR/COC record shall be sent to the EPA laboratory.			
13. If sampling on private property, did you provide a sample receipt to the owner of the property for all samples taken and removed from the property?			

ED_004144A_00000101-01090

Table H-3: Completing Field Logbook Checklist

(Page 1 of 1)

Completing Field Logbook	Yes	No	Comments
1. Did you use waterproof ink when writing in the field logbook?			
2. Did you document sampling project information such as: • Project name, ID, and location • Names of samplers • Geological observations, including maps • Atmospheric conditions • Field measurements • Sampling dates, times, and locations? Under no circumstances should the site name appear on any documentation being sent to the laboratory, unless the laboratory is a Regional EPA laboratory. Then the Region copy of the TR/COC record shall be sent to the EPA laboratory.			
3. Did you record sampling activity information such as: • Sampling dates and times • Sample identifications • Sample matrices • Sample descriptions (e.g., odors and/or colors) • Number of samples taken • Sampling methods/equipment • Description of QC samples?			
4. Did you document any and all deviations from the sampling plan?			
5. Did you document any and all difficulties in sampling and/or any unusual circumstances?			
6. Were all errors corrected by crossing a line through the error, initialing the error, dating the error, and then adding the correct information?			

ED_004144A_00000101-01091

Table H-4: Completing Handwritten Sample Labels Checklist

(Page 1 of 1)

Completing Handwritten Sample Labels	Yes	No	Comments
1. Did the Regional Sample Control Coordinator (RSCC) provide Contract Laboratory Program (CLP) Sample Numbers and Sample Management Office (SMO)-assigned CLP Case Numbers?			
2. If additional CLP Sample Numbers were needed, did you contact the appropriate Regional personnel?			
3. Were the CLP Sample Numbers and SMO-assigned CLP Case Numbers on the labels correct? Organic CLP Sample Numbers begin with the Regional letter code, followed by letters and numbers. Inorganic CLP Sample Numbers begin with "M," followed by the Regional letter code, and then letters and numbers.			
4. Were samples uniquely numbered and designated to only one sample? Samples collected for total metal and filtered metal analyses must receive separate, unique, CLP Sample Numbers.			
5. Were QC samples numbered accordingly?			
6. Were the specific requirements followed for total and filtered metals analysis, QC and Performance Evaluation (PE) samples, and SW-846 Method 5035A?			
7. Were all temperature blanks labeled with "TEMPERATURE BLANK"?			
8. Was a sample label containing the CLP Sample Number, SMO-assigned CLP Case Number, location, concentration, preservative, and the analysis, attached to each sample bottle or container as the sample was collected? Under no circumstances should the site name appear on any documentation being sent to the laboratory, unless the laboratory is a Regional EPA laboratory. Then, the Region copy of the TR/COC record shall be sent to the EPA laboratory.			
9. Was clear tape placed over the sample labels to protect the labels from moisture and to help the labels adhere to the sample bottle? Use only CLEAR tape over the sample labels and avoid wrinkles in the tape and the sample labels.			
10. Were all errors corrected by crossing a line through the error, initialing the error, dating the error, and then adding the correct information?			

ED_004144A_00000101-01092

Table H-5: Completing Handwritten Sample Tags & Custody Seals Checklists

(Page 1 of 1)

Completing Handwritten Sample Tags	Yes	No	Comments
1. Was waterproof ink used on the sample tags?			
2. If Regionally required for individual sample containers, was the project code on the sample tag completed?			
3. Was the location number on the sample tag completed?			
4 Was the date filled in using the format MM/DD/YYYY?			
5. Was the time of sample collection indicated in military time format HH:MM?			
6. Was the box checked indicating composite or grab sample?			
7. Was the location on the sample tag completed?			
8. Did you indicate whether or not the sample was preserved by checking "yes" or "no"?			
9. Was the appropriate analysis indicated on the sample tag?			
10. Were the appropriate CLP Sample Number and SMO-assigned CLP Case Number indicated and cross-referenced with the numbers on the sample label?			
11. Did you sign the sample tags?			
12 Did you attach the sample tag to the neck of the sample bottle with string, stretch string, or wire? Do **NOT** use wire to attach a sample tag to a metal sample.			
13. Were all errors corrected by crossing a line through the error, initialing the error, dating the error, and then adding the correct information?			
Completing Custody Seals	**Yes**	**No**	**Comments:**
1. Did you sign and date the custody seal?			
2. Did you attach a completed custody seal to the sample bottle, container, or plastic bag, placing the seal over the cap or lid of each sample bottle or container or on the bag opening such that it will be broken if the sample bottle, container, or bag is opened or tampered with?			
3. As appropriate, did you attach the completed custody seal to the sample shipping container or cooler, placing the seal such that it will be broken if the container or cooler is opened or tampered with?			
4. Were all errors corrected by crossing a line through the error, initialing the error, dating the error, and then adding the correct information?			

ED_004144A_00000101-01093

Table H-6: Packing Sample Container Checklist

(Page 1 of 1)

Packing Sample Container	Yes	No	Comments
1. Did you follow all State, Federal, Department of Transportation (DOT), and International Air Transportation Association (IATA) regulations governing the packaging of environmental and hazardous samples? If samples contain methanol preservation (e.g., samples to be analyzed by SW-846 Method 5035A), refer to the packaging instructions in Appendix D.			
2. Were all CLP Sample Numbers, SMO-assigned CLP Case Numbers, analyses, labels, tags, and custody seals attached to the correct sample containers?			
3. Is modified analysis indicated if requested?			
4. Was an inventory conducted of CLP Sample Numbers, SMO-assigned CLP Case Numbers, analyses, and containers, and verified against the TR/COC records?			
5. Were the correct number and type of Performance Evaluation (PE) and Quality Control (QC) samples collected?			
6. Were all sample containers sealed in clear plastic bags with the sample label and tag visible through the packaging?			
7. Were all soil/sediment samples known or suspected to contain dioxin securely enclosed in metal cans (e.g., paint cans) with the lids sealed?			
8. Was suitable absorbent packing material placed around the sample bottles or containers?			
9. Were the outsides of metal containers labeled properly with the CLP Sample Number, SMO-assigned CLP Case number, and the analysis of the sample inside?			

ED_004144A_00000101-01094

Table H-7: Packing Shipping Container Checklist

(Page 1 of 1)

Packing Shipping Container	Yes	No	Comments
1. Were you shipping samples in a clean waterproof metal or hard plastic ice chest or cooler in good condition?			
2. Were all non-applicable labels from previous shipments removed from the container?			
3. Were all inside and outside drain plugs closed and covered with suitable tape (e.g., duct tape)?			
4. Was the inside of the cooler lined with plastic (e.g., large heavy-duty garbage bag)?			
5. Was the lined shipping cooler packed with noncombustible absorbent packing material?			
6. Were sample containers placed in the cooler in an upright position not touching one another?			
7. Was a sample shipping cooler temperature blank included in the cooler?			
8. Did the documentation in the cooler only address the samples in that cooler?			
9. Was the site name absent from all documentation? Under no circumstances should the site name appear on any documentation being sent to the laboratory, unless the laboratory is a Regional EPA laboratory. Then the Region copy of the TR/COC record shall be sent to the EPA laboratory.			
10. Was there sufficient packing material around and in between the sample bottles and cans to avoid breakage during transport?			
11. If required, was double-bagged ice placed on top and around sample bottles to keep the samples cold at ≤ 6°C? Do not pack loose ice into the cooler.			
12. Was the top of the plastic liner fastened and secured with tape?			
13. Was a completed custody seal placed around the top of the fastened plastic liner (if required by the Region)?			
14. Were all sample documents enclosed within the cooler (e.g., TR/COC record, PE instructions, and cooler return instructions) in a waterproof plastic bag?			
15. Was the plastic bag, containing the documentation, taped to the underside of the cooler lid?			
16. Were cooler return instructions and airbills taped to the underside of the cooler lid?			
17. Was the return address of the cooler written with permanent ink on the underside of the cooler lid?			
18. Was tape placed around the outside of the entire cooler and over the hinges?			
19. Were the completed custody seals placed over the top edge of the cooler so the cooler cannot be opened without breaking the seals?			
20. Was the return address label attached to the top left corner of the cooler lid?			
21. Were instructional labels attached to the top of the cooler, as necessary (e.g., "This End Up," "Do Not Tamper With," or "Environmental Laboratory Samples")?			

ED_004144A_00000101-01095

Packing Shipping Container	Yes	No	Comments
22. Have all US DOT regulations been met for the shipment when shipping hazardous samples?			
23. If shipping samples containing methanol as a preservative (e.g., samples to be analyzed by SW-846 Method 5035A), was a label used to indicate methanol, the United Nations (UN) identification number for methanol (UN 1230), and Limited Quantity?			

ED_004144A_00000101-01096

Table H-8: Shipping & Reporting CLP Samples Checklist

(Page 1 of 1)

Shipping CLP Samples	Yes	No	Comments:
1. Did you follow all State, Federal, Department of Transportation (DOT), and International Air Transportation Association (IATA) regulations governing the shipment of environmental and hazardous samples?			
2. Was a separate airbill filled out for each cooler being shipped?			
3. Was the airbill filled out completely, including correct laboratory name, address, and telephone number, identification of recipient as "Sample Custodian," and appropriate delivery option (e.g., overnight or Saturday)?			
4. Was the completed airbill attached to the top of the cooler with the correct laboratory address?			
5. If more than one cooler was being shipped to the same laboratory, were they marked as "1 of 2," "2 of 2," etc.?			
6. Were the samples being shipped "overnight" through a qualified commercial carrier?			
7. Did you export the electronic COC XML file from Scribe?			
8. Did you upload the electronic COC XML file using the Submit Chain of Custody task in CLPSS?			
Reporting CLP Samples	**Yes**	**No**	**Comments:**
1. Did you contact the RSCC (or designee) or the Contract Laboratory Program Sample Management Office (SMO) on the same day samples were shipped?			
2. If the samples were shipped after 5:00 PM Eastern Time (ET), were they reported to the RSCC (or designee) or to SMO by 8:00 AM ET the following business day?			
3. Did you notify the RSCC (or designee) or SMO so that SMO will receive the delivery information by 3:00 PM ET on Friday for sample shipments that will be delivered to the laboratory on Saturday?			
4. Did you provide the RSCC (or designee) or SMO with: • Your name, phone number, and Region number; • Case Number of the project; • Modified Analysis Number, if requested; • Exact number of samples, matrix(ces), and type of analysis; • Laboratory(ies) to which the samples were shipped; • Carrier name and airbill number; • Date of shipment; • Date of next shipment; and • Any other information pertinent to the shipment?			

ED_004144A_00000101-01097

APPENDIX I GLOSSARY

Analyte -- The element, compound, or ion that is determined in an analytical procedure; the substance or chemical constituent of interest.

Analytical Services Branch (ASB) -- Directs the Contract Laboratory Program (CLP) from within the United States Environmental Protection Agency's (EPA's) Office of Superfund Remediation and Technology Innovation (OSRTI) in the Office of Solid Waste and Emergency Response (OSWER).

Aroclor -- Polychlorinated biphenyls (PCBs) or a class of organic compounds with 1 to 10 chlorine atoms attached to biphenyl and a general chemical formula of $C_{12}H_{10-x}Cl_x$. PCBs, commercially produced as complex mixtures containing multiple isomers at different degrees of chlorination, were marketed in North America under the trade name Aroclor.

Case -- A finite, usually predetermined, number of samples collected over a given time period from a particular site. Case numbers are assigned by the Sample Management Office (SMO). A Case consists of one or more Sample Delivery Groups (SDGs).

Chlorinated Dibenzo-p-Dioxin/Chlorinated Dibezofuran (CDD/CDF) -- A group of organic compounds of tetra- through octa-chlorinated dibenzo-p-dioxins (CDDs) and dibenzofurans (CDFs).

Comprehensive Environmental Response, Compensation, and Liability Act (CERCLA) -- First authorized by Congress in December 1980, and amended in 1986, CERCLA provided broad Federal authority to respond directly to the release or possible release or hazardous substances that may endanger human health or the environment. CERCLA also established a Trust Fund to provide for cleanup when no responsible party could be identified; hence, CERCLA is commonly referred to as "Superfund."

Congener -- The chlorinated congeners of biphenyl.

Contract Laboratory Program (CLP) -- A national program of commercial laboratories under contract to support the EPA's nationwide efforts to clean up designated hazardous waste sites by providing a range of chemical analytical services to produce environmental data of known and documented quality. This program is directed by EPA's Analytical Services Branch (ASB).

Contract Laboratory Program Contracting Officer's Representative (CLP COR) -- Monitors technical performance of the contract laboratories in each Region.

Contract Laboratory Program Sample Management Office (CLP SMO) -- A contractor-operated facility operated under the CLP, awarded and administered by the EPA, which provides necessary management, operations, and administrative support to the CLP. SMO coordinates and schedules sample analyses, tracks sample shipments and analyses, receives and tracks data for completeness and compliance, and processes laboratory invoices.

Custody Seal -- An adhesive label or tape that is used to seal a sample bottle or container that maintains chain of custody and that will break if the sample bottle or container is opened or tampered with.

Cyanide (Total) -- Cyanide ion and complex cyanides converted to hydrocyanic acid (HCN) by reaction in a reflux system of a mineral acid in the presence of magnesium ion.

Data Quality Objective (DQO) -- The requirements established to maintain the quality of the data being collected.

Data Validation -- Data validation is based on Region-defined criteria and limits, professional judgment of the data validator, and (if available) the Quality Assurance Project Plan (QAPP) and Sampling and Analysis Plan (SAP).

Duplicate -- Sample required by the laboratory's contract to check the accuracy and precision of inorganic analyses. It is a second aliquot of the same sample to determine the precision of the method.

Equipment Blank -- A sample used to check field decontamination procedures. See Field Blank.

ED_004144A_00000101-01098

Field Blank -- Any blank sample that is submitted from the field. Each field blank is assigned its own unique EPA sample number. A field blank checks for cross-contamination during sample collection, sample shipment, and in the laboratory. A field blank includes trip blanks, rinse blanks, equipment blanks, etc.

Field Duplicate -- Checks reproducibility of laboratory and field procedures and indicates non-homogeneity.

Field QC Sample -- Used to detect for contamination or error in the field.

Field Sample -- Primary sample material taken out in the field from which other samples, such as duplicates or split samples are derived. A field sample can be prepared in the field and sent for analysis in one or multiple containers, and is identified by a unique EPA sample number.

Field Sampling Plan (FSP) -- Developed to outline the actual steps and requirements pertaining to a particular sampling event, and explains, in detail, each component of the event to all involved samplers.

Holding Time -- The elapsed time expressed in hours, days, or months from the date of collection of the sample until the date of its analysis.

> **Contractual** -- The maximum length of time that the CLP laboratory can hold samples prior to extraction and/or analysis, and are described in the CLP analytical services Statements of Work (SOWs).
>
> **Technical** -- The maximum length of time that samples may be held from time of collection to time of preparation and/or analysis and still be considered valid.

Laboratory Blank -- See Method Blank.

Laboratory Duplicate -- A sample required by the laboratory's contract to check the precision of inorganic analyses.

Laboratory QC Sample -- An additional volume of an existing sample, as required by the laboratory's contract, used to detect contamination or error in the laboratory's practices.

Matrix -- The predominant material of which a sample to be analyzed is composed.

Matrix Spike (MS) -- Sample required by the laboratory's contract to check the accuracy of organic and inorganic analyses. It is an aliquot of a sample (water or soil) that is fortified (spiked) with known quantities of a specific compound and subjected to the entire analytical procedure. See Matrix Spike Duplicate.

Matrix Spike Duplicate (MSD) -- Sample required by the laboratory's contract to check the accuracy and precision of organic analyses. It is a second aliquot of the same matrix as the Matrix Spike (MS) that is spiked to determine the precision of the method. See Matrix Spike.

Method Blank -- An analytical control consisting of all reagents, internal standards and surrogate standards [or System Monitoring Compounds (SMCs) for volatile organic analysis], that is carried throughout the entire analytical procedure. The method blank is used to define the level of laboratory, background, and reagent contamination, also referred to as laboratory blank when defining the level of laboratory contamination.

Modified Analysis (MA) -- A change in the technical requirements that fall outside the scope of the Statement of Work (SOW).

Performance Evaluation (PE) Sample -- A sample of known composition provided by the EPA Region for contractor analysis. Used by EPA to evaluate contractor performance.

Pesticides -- Substances intended to repel, kill, or control any species designated a "pest," including weeds, insects, rodents, fungi, bacteria, and other organisms. Under the CLP, only organochlorine pesticides are analyzed (e.g., DDT, Dieldrin, Endrin, etc.).

ED_004144A_00000101-01099

Polychlorinated Biphenyls (PCBs) -- A group of toxic, persistent chemicals used in electrical transformers and capacitors for insulating purposes, and in gas pipeline systems as a lubricant. The sale and new use of PCBs were banned by law in 1979.

Quality Assurance (QA) -- An integrated system of management activities involving planning, implementation, assessment, reporting, and quality improvement to ensure that a process, item, or service is of the type and quality needed and expected by the customer.

Quality Assurance Project Plan (QAPP) -- Document written to meet requirements outlined in the document *EPA Guidance for Quality Assurance Project Plans* (EPA QA/R-5). Prepared in advance of field activities and used by samplers to develop any subsequent plans such as the Sampling Analysis Plan (SAP) or the Field Sampling Plan (FSP).

Quality Control (QC) -- The overall system of technical activities that measures the attributes and performance of a process, item, or service against defined standards to verify that they meet the stated requirements established by the customer; operational techniques and activities that are used to fulfill requirements for quality.

Regional Sample Control (RSCC) Coordinator -- In most Regions, coordinates sampling efforts and serves as the central point of contact for sampling questions and problems. Also assists in coordinating the level of Regional sampling activities to correspond with the monthly projected demand for analytical services.

Regional Site Manager -- Coordinates the development of data quality objectives and oversees project-specific remedial or removal contractors, State officials, or private parties conducting site sampling efforts.

Rinsate Blank -- A sample used to check decontamination procedures. Also see Field Blank.

Routine Analytical Service (RAS) -- The standard inorganic and organic analyses available through the CLP.

Sample -- A discrete portion of material to be analyzed that is contained in single or multiple containers, and identified by a unique sample number.

Sample Delivery Group (SDG) -- A unit within a sample Case that is used to identify a group of samples for delivery. An SDG is defined by the following, whichever is most frequent:

- Each Case of field samples received; or
- Each 20 field samples (excluding PE samples) within a Case; or
- Each 7 calendar day period (3 calendar day period for 7-day turnaround) during which field samples in a Case are received (said period beginning with the receipt of the first sample in the SDG).

In addition, all samples and/or sample analyses assigned to an SDG must have been scheduled under the same contractual turnaround time. Preliminary Results have no impact on defining the SDG. Sample may be assigned to SDGs by matrix (e.g., all soil samples in one SDG, all water samples in another) at the discretion of the laboratory.

Sample Label -- An identification label attached to a sample bottle or container to identify the sample.

Sample Number -- A unique number used to identify and track a sample. This number can be recorded on a sample label or written on the sample bottle or container using indelible ink.

Sample Tag -- A tag attached to a sample that identifies the sample and maintains chain of custody.

Sampling Analysis Plan (SAP) -- A document that explains how samples are to be collected and analyzed for a particular sampling event.

Scribe -- A stand-alone Windows-based desktop application that samplers can use to automatically create and generate sample documentation prior to and during sampling events.

Semivolatile Organic Analyte (SVOA) -- A compound amenable to analysis by extraction of the sample using an organic solvent.

ED_004144A_00000101-01100

Standard Operating Procedure (SOP) -- A written document that details the method for an operation, analysis, or action with thoroughly prescribed techniques and steps, and that is officially approved as the methods for performing certain routine or repetitive tasks.

Statement of Work (SOW) -- A document that specifies how laboratories analyze samples under a particular Contract Laboratory Program (CLP) analytical program.

Superfund -- The program operated under the legislative authority of the Comprehensive Environmental Response, Compensation, and Liability Act (CERCLA) and Superfund Amendments and Reauthorization Act (SARA), that funds and carries out EPA removal and remedial activities at hazardous waste sites. These activities include establishing the National Priorities List (NPL), investigating sites for inclusion on the list, determining their priority, and conducting and/or supervising cleanup and other remedial actions.

Superfund Amendments and Reauthorization Act (SARA) -- The 1986 amendment to the Comprehensive Environmental Response, Compensation, and Liability Act (CERCLA).

Traffic Report/Chain of Custody (TR/COC) Record -- A record that is functionally similar to a packing slip that accompanies a shipment of goods. Used as physical evidence of sample custody and functions as a permanent record for each sample collected.

Trip Blank -- A sample used to check for contamination during sample handling and shipment from field to laboratory. Also see Field Blank.

Volatile Organic Analyte (VOA) -- A compound amenable to analysis by the purge-and-trap technique. Used synonymously with the term purgeable compound.

ED_004144A_00000101-01101

Appendix H

ITRC Fact Sheet for PFC Sampling, Handing, and Analysis

Site Characterization Considerations, Sampling Precautions, and Laboratory Analytical Methods for Per- and Polyfluoroalkyl Substances (PFAS)

1 Introduction

PFAS contamination poses site characterization, sampling, and analytical challenges. PFAS have unique chemical and physical properties and they often occur in complex mixtures that can change over time. At environmental investigation sites, very low concentrations of several different PFAS must be sampled and analyzed. Many materials used in the course of environmental investigation can potentially contain PFAS. There is limited published research or guidance on how certain materials used by field staff affect sample results.

ITRC has developed a series of fact sheets that summarize the latest science and emerging technologies regarding PFAS. This fact sheet describes methods for evaluating PFAS in the environment, including:

- site characterization considerations
- sampling precautions
- laboratory analytical methods

USEPA has compiled an online resource for PFAS that includes topics such as policy and guidance, chemistry and behavior, occurrence, toxicology, site characterization, and remediation technologies (USEPA 2017h). The National Groundwater Association (NGWA) has also published a resource on PFAS that includes information about sampling and analytical methods (NGWA 2017).

2 Site Characterization Considerations

The purpose of site characterization is to understand the sources of contamination, site-specific contaminant fate and transport, and potential exposures and risks posed by a site. The site characterization techniques and study principles for PFAS-contaminated sites are generally the same as for any other site contaminated by hazardous substances. General site investigation principles and techniques will not be covered in this fact sheet, as these are well described in many existing guidance documents (for example, ASTM International 2011, 2013a, 2013b, 2014a, 2014b; Intergovernmental Data Quality Task Force (IDQTF) 2005; USEPA 1987, 1988a, 2000a, 2006c, 2013a, 2016i).

The unique chemical characteristics, uses, and transport mechanisms of PFAS should be accounted for when characterizing a contaminated site. PFAS sources (including ambient sources) pose many challenges, including their frequent occurrence as mixtures, the role of precursors, and the persistence and mobility of PFAS relative to other environmental contaminants.

2.1 Sources and Site Identification

The *Environmental Fate and Transport* fact sheet contains conceptual site models, including descriptions and figures, for four different common source scenarios. Phase 1 site characterization investigations (ASTM 2013c) may miss the potential for PFAS contamination at a site because these chemicals historically were not considered hazardous. Comparing timelines of site history (for example, processes, layout, chemical use, and release history) with the timeline of PFAS use and with existing drinking water data (for example, the UCMR3 data [USEPA 2017f]) can be helpful in determining source identification. A solid understanding of historical uses and the past presence of PFAS is critical to identifying PFAS that may have been released at a site. See the *History and Use* fact sheet for more information.

Another challenge is that commercial products and industrial releases may consist of complex PFAS mixtures that change over time through fate and transport mechanisms and may include unidentified PFAS. Changes in manufacturing practices as well as formula modifications also complicate the source identification. When characterizing source areas, there is often a focus on only perfluoroalkyl acids (PFAAs), particularly perfluorooctane sulfonate (PFOS) and perfluorooctanoate (PFOA), which are the current chemicals of concern. These and other chemicals of concern were often released as part of original PFAS mixtures, but also may be transformation products of PFAA precursors. The focus on PFAAs means that significant portions of the total PFAS contamination might be missed, leading to underestimates of plume life expectancy for groundwater and mass flux as well as PFAS contaminant mass.

The variation in mixtures of PFAS, associated with different processes and products, may provide signatures that help identify source areas and distinguish between multiple sources. However, careful analysis is needed to distinguish between signatures associated with differing sources and those due to environmental partitioning or multiple releases over time.

Knowledge of PFAS fate, transport, and mode of release is essential to placing sampling locations. Some PFAS released at aqueous film-forming foam (AFFF) training or application sites or by industrial air emissions may result in large, diffuse areas of soil contamination (rather than point sources) that act as sources of groundwater contamination. Air emissions

ED_004144A_00000101-01103

from industries using PFAS may result in releases to soil and surface water, with subsequent infiltration to groundwater (Davis et al. 2007; Shin et al. 2011).

2.2 Development of Initial Conceptual Site Model (CSM)

Conceptual site models for four different common source scenarios are included in the *Environmental Fate and Transport* fact sheet. These may be useful in developing a site-specific CSM. The CSM should include sources, site history, transport and exposure pathways, and receptor identification for a specific site. Any information pertaining to potential off-site PFAS contributors, such as landfills, wastewater treatment facilities, industrial sites, fire training areas and other sources, should be considered when determining possible secondary sources of PFAS.

2.2.1 Atmospheric, Geologic, and Hydrogeologic Framework

As with all contaminated sites, characterization relies upon an adequate understanding of the geology and hydrogeology of the site. Several PFAS, including the PFAAs of current regulatory concern, are relatively mobile in groundwater. Studies have reported both biotic and abiotic transformations of some polyfluorinated substances, referred to as precursors, which may form PFAAs. However, there is no evidence that PFAAs degrade or otherwise transform under ambient environmental conditions. Thus, PFAS plumes in groundwater may travel for several miles from the original source. At sites with highly permeable, low-organic matter soils, PFAS plumes can be extensive.

Partitioning behavior of perfluorocarboxylates (PFCAs) and perfluorosulfonates (PFSAs) has been studied more than that of other PFAS. PFCAs and PFSAs are organic anions at all environmentally relevant pH values and tend to be mobile in groundwater (Xiao et al. 2015). However, these compounds, especially those with longer carbon chains, often associate with the organic carbon fraction of soil or sediment (Higgins and Luthy 2006; Guelfo and Higgins 2013) when present in the saturated zone. See the *Environmental Fate and Transport* fact sheet for more information.

At sites where PFAS are detected in surface water, the CSM should address the potential for PFAS transport by surface water and infiltration of the PFAS to groundwater in areas downstream of the site. Some PFAS are highly soluble and resistant to breakdown in the environment, which means they may be transported significant distances in surface water (Awad et al. 2011; Kwadijk, Kotterman, and Koelmans 2014). In Minnesota, PFAS-contaminated surface water moving through a natural and manmade drainage system was found to have infiltrated to groundwater in multiple locations (losing streams, lakes, ditches, and stormwater ponds) creating large, discreet areas of groundwater contamination several miles from the original source areas (ATSDR 2008; MDH 2017).

A thorough understanding of the geology and hydrogeology of a site (including groundwater-surface water interactions and air-surface water interactions) can make selection of sampling locations more efficient and reduce the number of required samples. Without careful preparation, multiple, and sometimes redundant, field efforts can make site characterization costly.

2.2.2 Investigation Strategies

Many PFAS sites consist of releases that occurred decades before PFAS were regulated. As a result, contaminant plumes have had years to develop, and in some cases, stabilize. Therefore, site characterization should not necessarily proceed the same way as for newer sites with more recent releases. At these sites, sampling begins near the source area and steps outward to determine extent. For PFAS releases, however, contamination may have occurred in areas upgradient of drinking water sources, thus drinking water supply sampling should be a top priority to ensure that human receptors are protected. Data from private drinking water supply wells may be useful in determining the extent of contaminant plumes, if the well construction and characteristics information are available.

After evaluating drinking water, soils should be characterized to determine the three-dimensional extent of soil and groundwater contamination. Soil and groundwater sampling locations should be informed by fate and transport characteristics of the site type and source (see *Environmental Fate and Transport* fact sheet). Tools for determining the extent of established plumes may include transect surveys using direct push technology, followed by installation of monitoring wells, or other appropriate techniques such as high-resolution site characterization (USEPA 2016i). Potential secondary sources should be identified, for example, from irrigation or biosolids application, and other anthropogenic factors affecting fate and transport of PFAS-contaminated media.

Certain PFAS are present in ambient air, and may be elevated near sources such as landfills, WWTFs, fire training facilities, and manufacturing plants. Typical air sampling methods for PFAS include either glass fiber or quartz fiber filters and a sorbent material such as polymeric resin or polyurethane foam to collect both the particle and gas phases. Most

ED_004144A_00000101-01104

methodologies in the literature collect the particle phase and then the gas phase; however, some studies developed a method to collect the gas phase first followed by the particle phase in efforts to not overestimate the particle phase concentration (Barber et al. 2007; Jahnke 2007b, 2009; Ahrens et al. 2011a, 2012).

2.2.3 Risk Assessment

Site-specific risk assessment is informed by data and information iteratively collected in the site characterization. Of the many PFAS that may be found at contaminated sites, the toxicity of PFOA and PFOS has been studied the most thoroughly. A substantial database of toxicity information is also available for some other PFAS including PFBA, PFBS, PFHxA, PFNA, and GenX, while there is limited publicly available information on toxicity of other PFAS that may be present at PFAS-contaminated sites. USEPA has established a Health Advisory for protection from a lifetime exposure to PFOA and PFOS from drinking water of 70 ppt for each compound individually, or the total of both. While many states use these USEPA Health Advisories as guidance for PFOA and PFOS, several states have developed more stringent levels for these compounds; some states have also developed standards or guidance for other PFAS of local concern (see the *Regulations, Guidance, and Advisories* fact sheet). Given that PFAS typically occur in complex mixtures, and human and environmental receptors are exposed to some PFAS-forming complex mixtures, evaluating the true risks at a site can be particularly challenging. In the absence of risk-based values for some of the PFAS that are detected and because additional PFAS not detected by the analytical method may be present, the investigation team should identify data gaps and communicate the impact that these gaps have on risk analyses. Data gaps and scientific uncertainty must be documented so that as site cleanup progresses and more information becomes available, the project team can reassess potential risks from the site and better communicate to the public how site decisions are made.

2.2.3.1 Human Receptors

The presence of PFAS in the environment and consumer product has resulted in detectable levels (most frequently PFOA, PFNA, PFOS and PFHxS) in the blood serum of most of the U.S. population (CDC 2017b). The total body burden of these PFAS results from exposure to the PFAS themselves and formation from precursors through metabolism in the body (Olsen et al. 2017; D'eon and Mabury 2011). Blood serum levels of these PFAS in the general population have generally decreased over time (CDC 2017a). Risk assessment of PFAS exposure for humans near contaminated sites must include both exposures prevalent in the general population, such as from the food supply and consumer products, and exposures from the contaminated site, such as drinking water, house dust, ambient air, and locally caught fish. Exposures from even relatively low levels (for example, below 70 ng/L) of long-chain PFAS in drinking water are much higher than total exposures in the general population not impacted by a contaminated site (Bartell 2017).

The tendency of some PFAS to bioaccumulate (ATSDR 2015a) is also a critical component in evaluating potential health effects; food chain routes of exposure should be considered. For example, PFOS and longer-chain perfluorinated sulfonates, and PFNA and longer-chain perfluorinated carboxylates, are known to bioaccumulate in fish, including in species used for food (Conder et al. 2008). Also, as a result of chronic ingestion of water and exposure to other materials containing PFAS, women may carry PFAS in their blood and breast milk. These PFAS are transferred to their baby during pregnancy and through breast feeding. Serum levels of long-chain PFAS rapidly increase in breast fed infants due to the PFAS levels present in breast milk and the higher fluid consumption rates of infants (Mogensen et al. 2015; Winkens et al. 2017; Fromme et al. 2010; Verner et al. 2016a, b).

2.2.3.2 Ecological Receptors

PFAS present a potential hazard to wildlife by direct and dietary exposure on both individual and population levels (Environment Canada 2006, 2012). Numerous studies have shown PFAAs, particularly PFSAs, are globally present in wildlife and may bioaccumulate in birds, fish, and mammals (including livestock); other animal classes are less studied (Houde et al. 2011; Lupton et al. 2014; OECD 2013). Biomagnification (in which concentrations increase with increasing trophic level) appears to be more complicated, occurring in some food webs but not others (Franklin 2016; Fang et al. 2014). Effects of PFAS exposure on wildlife vary widely by species and PFAS compound. Ecological toxicity information for many PFAS compounds is currently unavailable, while for others, data is limited and still evolving. Therefore, as site characterization activities for PFAS occur, the current state of the science should be reviewed before calculating ecological risk. More information is included in the *Environmental Fate and Transport* fact sheet.

3 Sampling

Sampling conducted to determine PFAS concentrations in water, soil, sediment, air, biota and other sources is similar to that for other chemical compounds, but with several additional specific considerations and protocols. If regulatory procedures, methods, or guidelines are inconsistent with the needs of a PFAS sampling program, then the governing

ED_004144A_00000101-01105

agency should be contacted directly to determine an alternate approach or if an exception can be made. Other considerations for PFAS sampling include low laboratory detection limits, state and federal screening levels, and in some cases, cleanup criteria and potential for background concentrations of PFAS in the environment.

3.1 Equipment and Supplies

Many materials used in the course of environmental investigation can potentially contain PFAS. There is limited published research or guidance on how certain materials used by field staff affect sample results. Therefore, a conservative approach is recommended to exclude materials known to contain PFAS. Obtain and review all Safety Data Sheets (SDSs) before considering materials for use during PFAS sampling. Materials to avoid include:

- Teflon, polytetrafluoroethylene (PTFE)
- waterproof coatings containing PFAS
- food containers
- anything with fluoro in the name
- fluorinated ethylene propylene (FEP)
- ethylene tetrafluoroethylene (ETFE)
- low density polyethylene (LDPE), polyvinylidene fluoride (PVDF)

Many waterproof coatings contain PFAS, such as Gore-tex treated PPE or most waterproof papers, but some products are waterproofed with acceptable materials such as polyurethane, rubber, or PVC. Individual product specifications should be examined closely. In the case of Tyvek PPE, plain Tyvek does not contain PFAS while coated Tyvek does. In addition, materials incidentally transported to sites may contain PFAS. For example, fast food wrappers may contain PFAS. Due to the ubiquitous nature of PFAS, sampling crews must review all materials used to avoid contamination. Collection of quality assurance and quality control (QA/QC) samples is a useful tool to assess field contamination.

Two guidance documents identify materials and equipment that can be used in PFAS-focused investigations, as well as materials that should be avoided because they are known or suspected to be potential sources of PFAS:

- *Bottle Selection and other Sampling Considerations When Sampling for Per-and Poly-Fluoroalkyl Substances (PFAS)* (USDOD EDQW 2017b)
- *Interim Guideline on the Assessment and Management of Perfluoroalkyl and Polyfluoralkyl Substances (PFAS), Contaminated Sites Guidelines*, (Government of Western Australia, Department of Environment Regulation 2016)

Sometimes it is impossible to eliminate materials that affect PFAS results in samples. For example, these materials might be needed at sites where hazards warrant the use of specific personal protective equipment (PPE), where PFAS are the secondary or co-contaminant and the primary contaminant requires specific materials for proper sampling, or where the opportunity to collect a sample occurs before a proper sampling program is developed. When PFAS-containing equipment and supplies cannot be eliminated, increasing the equipment rinse blank samples will more thoroughly document the PFAS concentrations. In these situations, a thorough QA/QC program becomes even more important.

Not all PFAS are hydrophilic, and some are volatile. As a result, these chemicals may sorb to sampling equipment and supplies or be lost from samples during sample collection. Preliminary data suggest that sorption may occur quickly. Additionally, volatile losses have not yet been characterized. Until they are better quantified, sampling efforts should consider whether these losses would affect project objectives and adjust accordingly.

3.2 Bottle Selection and Sample Amount

Containers should be specified in the analytical method, provided by the laboratory selected to perform the analyses, and should be certified by the laboratory to be PFAS-free. The term *PFAS-free* is a method or project-defined concentration level (for example, < 1/2 the limit of quantitation for the specific compound of interest). USEPA Method 537, Version 1.1 (September 2009) requires the use of 250 mL polypropylene containers and caps/lids for drinking water sampling (Shoemaker, Grimmett, and Boutin 2009). Currently, USEPA has not issued guidance or analytical methods for any sample media other than drinking water. Depending on the analytical method used or program (for example state or DOD) requirements, polypropylene or high-density polyethylene (HDPE) bottles with unlined plastic caps are typically used (USDOD EDQW 2017b).

ED_004144A_00000101-01106

Best practices in sample preparation must be used when selecting the size, volume, and representativeness of samples. To minimize effects from analyte sorption on sample containers, the laboratory must analyze the entire sample, including the sample container rinsate. The project screening or applicable regulatory levels, and the expected or potential concentration of the analytes, are also relevant. If the sample is known to contain high concentrations of PFAS (for example, AFFF formulations), loss is negligible and therefore the entire sample does not need to be used.

Because the concentration level of PFAS in aqueous samples determines whether the whole sample or an aliquot is used in the laboratory preparation, the sampler should collect an additional volume of each sample in a separate container. Then, the laboratory can screen the extra sample for high concentrations without affecting the final sample result. For soil or sediment, obtaining a representative subsample in the laboratory is critical, so the entire sample should be homogenized in the laboratory prior to subsampling. Coordinating with the laboratory is crucial to determine the appropriate sample container volumes for environmental media other than drinking water.

3.3 Sample Preservation, Shipping, Storage, and Hold Times

USEPA Method 537, Version 1.1 contains specific requirements for drinking water sample preservation, shipping, storage, and holding times (Shoemaker, Grimmett, and Boutin 2009). Currently, there is no USEPA guidance or requirement for other sample media. The chemical preservation required by Method 537, Trizma, is added for buffering and free chlorine removal and applicable to DW samples only. Until additional information is available, the thermal preservation, shipping, storage, and holding times contained in USEPA Method 537, Version 1.1 should be used for all other sample media except biota. For biota samples (for example, vegetation, fish), the samples should be frozen to limit microbial growth until sample preparation is performed at the laboratory. Microbial growth may result in PFAAs values biased high due to biodegradation of precursor compounds; however, these effects have not been well studied.

3.4 Decontamination Procedures

Field sampling equipment, including oil/water interface meters, water level indicators, and other nondedicated equipment used at each sample location, require cleaning between use. The SDSs of detergents or soaps used in decontamination procedures should be reviewed to ensure fluoro-surfactants are not listed as ingredients. Use laboratory-certified PFAS-free water for the final rinse during decontamination of sampling equipment. Decontaminate larger equipment (for example, drill rigs and large downhole drilling and sampling equipment) with potable water using a high-pressure washer or steam. To the extent practical, rinse parts of equipment coming in direct contact with samples with PFAS-free water. Heavy equipment is best cleaned within a decontamination facility or other means of containment (for example, a bermed, lined pad and sump, or a portable, self-contained decontamination booth). Potable water sources should be analyzed in advance for PFAS. Wherever possible, rinse equipment with PFAS-free water immediately before use.

3.5 Field QC

Field quality control (QC) samples are a means of assessing quality from the point of collection. Such QC samples include, but are not limited to, field reagent blanks, equipment rinse blanks, and sample duplicates. USEPA Method 537, Version 1.1 contains specific requirements for the QC samples that must accompany drinking water samples. Collection and analysis of QC samples are important for PFAS analyses because of very low detection limits and widespread commercial use (historical and current) of PFAS containing products.

3.6 Sampling Precautions

Standard sampling procedures can be used at most PFAS sites. However, there may be some exceptions and additional considerations related to PFAS behavior, and issues associated with potential use of PFAS-containing or adsorbing sampling equipment and supplies.

3.6.1 Groundwater

The most inert material (for example, stainless steel, silicone, and HDPE), with respect to known or anticipated contaminants in wells should be used whenever possible. Dedicated sampling equipment installed in existing wells prior to investigation should be thoroughly checked to ensure that the equipment is PFAS-free. For long-term investigations, samples may be collected in duplicate with and without existing dedicated equipment. If PFAS analyses show that the equipment does not affect results, the equipment may be kept and used long term. This determination depends on project-specific requirements, however, and should only be used by a project team with full disclosure to all stakeholders.

ED_004144A_00000101-01107

3.6.2 Surface Water

To avoid cross-contamination from sampling materials to sample media, the outside of all capped sample containers should be rinsed multiple times with the surface water being sampled before filling the containers. When site conditions require, remote sampling into sample containers can be accomplished by clamping the container onto the end of a clean extension rod. The extension rod must be made of PFAS-free material and have been decontaminated. Within the context of sample collection objectives, the sample location in the water column should consider the potential stratification of PFAS in solution and their tendency to accumulate at the air/water interface. For more information on stratification, see the *Environmental Fate and Transport* fact sheet.

3.6.3 Porewater

Peristaltic pumps with silicone and HDPE tubing are typically used for porewater sample collection, along with push point samplers, porewater observation devices (PODs), or drive point piezometers. Push point samples and drive point piezometers are made of stainless steel, while PODs consist of slotted PVC pipe and silicone tubing. These samplers should be dedicated and not reused across a site or multiple sites.

3.6.4 Soil/Sediment

Most core and grab sampling devices are constructed of stainless steel. Some core samplers include an HDPE sleeve inserted in the core barrel to retain the sample. PPE such as waders and personal flotation devices may be required. Ensure that materials that contact the media to be sampled do not have water-resistant coatings which contain PFAS.

3.6.5 Fish

The species of fish collected, as well as the portion of fish sampled (whole versus fillet), depends on the project goals (for example, ecological risk or human health). Studies have shown the majority of the PFAS in fish are stored in the organs, not the flesh (Martin et al. 2004; Yamada et al. 2014). Communicating project objectives to the laboratory is important prior to field work in order to determine the necessary quantity and quality of tissue, fish handling requirements, laboratory sample preparation (including single fish or composite fish samples, and whole or fillet preparation), and packing and shipping requirements.

3.6.6 Potential high concentration samples

The CSM or previous sampling may indicate areas of high concentrations of PFAS for which single-use, disposable equipment is recommended. If single-use is not possible, take additional precautions such as implementing a greater frequency of decontamination blanks and not reusing equipment to sample potentially low PFAS concentration samples. High concentration samples should be segregated during shipping to the laboratory.

Some projects may require the analysis of AFFF product that has been used at the site. All AFFF product samples must be considered high concentration samples. These samples should be segregated from other samples during sampling and shipping to avoid cross contamination. Samples that may contain high concentrations of PFAS should be clearly identified on the *Sample Chain of Custody* that is shipped with the samples. Field test kits are available for PFAS but have not been fully evaluated. While these kits cannot achieve low detection limits, they could be helpful in screening for potential high concentrations of PFAS in the field.

4 Quantitative Analysis

USEPA Method 537, Version 1.1 contains specific requirements for sample preparation and analysis of drinking water samples. Currently, there are no USEPA methods for the preparation and analysis of other sample media. However, other published methods may apply:

- ISO Method 25101 (ISO 2009)
- ASTM D7979 (ASTM 2017b)
- ASTM D7968 (ASTM 2017a)

To evaluate the laboratory's ability to meet the needs of a project, the laboratory's analytical procedure should be reviewed as part of the laboratory selection process. In addition, performance data such as concentrations observed in lab blanks and matrix spike recovery are necessary.

ED_004144A_00000101-01108

4.1 Sample Preparation

The sample preparation procedure should be specified in the sample analysis procedure and should be included as part of the sample and analysis plan (SAP) or quality assurance project plan (QAPP). This procedure should demonstrate that extreme care is taken to prevent sample contamination during preparation and extraction. All supplies must be checked and confirmed as PFAS-free prior to sample preparation. Intermittent contamination can occur due to vendor supply or manufacturing changes; therefore, each lot of supplies should be verified and documented prior to use.

Because sample preparation may vary in different analytical procedures, the laboratory should document its preparation process for the samples. A critical step in the laboratory's preparation process is ensuring a representative sample or subsample is used for analysis. For all media, sample transfers should be minimized. Sample filtration to eliminate solid particulate from aqueous samples is not recommended because PFAS losses can occur due to adsorption of PFAS onto filters.

The entire aqueous sample received should be prepared and the sample container appropriately rinsed. Aqueous samples that are prepared using the whole sample must be extracted using SPE. The exception to this practice is samples containing high concentrations of PFAS, because each type of solid phase extraction cartridge has a defined capacity to retain PFAS analytes. Exceeding this capacity results in a low bias in PFAS results. In these instances, to prevent this bias, samples can be prepared using serial dilution techniques or analyzed using direct injection (for example, ASTM D7979). Most laboratories screen samples using a small volume sample to determine if it contains PFAS at concentrations too high for SPE sample preparation and analysis. For solid samples, the laboratory homogenizes the sample before subsampling and extraction.

To account for biases resulting from preparation steps, internal standards should be added to all samples (preferably extracted internal standards that are isotopically-labeled analogs of each analyte, if commercially available). The addition of internal standards to the sample should be clearly documented. Internal standards should be added to the sample at different steps in the process, depending on the sample preparation process used. Internal standards should also be added to whole field samples in the field container (SPE extraction samples) after subsampling, prior to addition of extraction solvent for soil or sediment samples, and after final dilution for serial dilution prepared samples (USDOD 2017a).

Depending on the analytical method used, cleanup procedures (for example, graphitized carbon) may be used on samples when matrix interferences (for example, bile salts and gasoline range organics) could be present. ENVI-Carb cleanup removes cholic acids, a known interference in fish tissue sample. The procedure should clearly state what type of cleanup process is used and in what instances.

The analytical procedure should describe what batch QC samples are prepared with each media type. Batch QC samples might include method blank (MB), laboratory control sample (LCS), laboratory control sample duplicate (LCSD), sample duplicate (SD), matrix spike (MS), and matrix spike duplicate (MSD). Additional QC may also be included. For samples with high concentrations of PFAS, in addition to an MS and an MSD, an LCSD and an SD may be warranted. The SD should be prepared using a different aliquot from the same sample bottle to create a second set of serial dilutions. Review of the laboratory's procedure should ensure that the laboratory is capable of using the batch QC needed for the project, including meeting the project's QC acceptance criteria.

4.2 Sample Analysis

Currently, the analytical detection method of choice for PFAS analysis is liquid chromatography-mass spectrometry-mass spectrometry (LC/MS/MS), which is especially suited for analysis of ionic compounds, such as the PFSAs and PFCAs. Gas chromatography-mass spectrometry (GC/MS) can also be used for PFAS analysis, specifically the neutral and nonionic analytes, such as the fluorotelomer alcohols (FTOHs), perfluoroalkane sulfonamides, and perfluoroalkane sulfonamido ethanols. Currently, LC/MS/MS analysis of PFAS is widely available, whereas GC/MS analysis has limited commercial availability.

LC/MS/MS methods developed by laboratories may be based on USEPA Method 537, Version 1.1. The USEPA method does not contain steps to alleviate matrix interference issues potentially found in other sample media and does not contain steps to prepare solid sample media. Methods for other sample media may include extraction or sample preparation procedures for other matrices, use of isotope dilution, the addition of other PFAS analytes, and confirmation using confirmatory ions and ion ratios. Because these modifications are not standardized, analytical methods can result in greatly varied data, precision, and accuracy. Laboratories should provide performance data for the relevant media

ED_004144A_00000101-01109

for each project. The USDOD EDQW has attempted to standardize many of these modifications through requirements contained in the USDOD Environmental Laboratory Accreditation Program (USDOD ELAP) document, the DOD *Quality Systems Manual for Environmental Laboratories* (DOD QSM), Version 5.1, Appendix B, Table B-15 (USDOD 2017a).

Certified analytical standards are available from several manufacturers. Products may have variable purity and isomer profiles, which may compromise the accuracy, precision, and reproducibility of data. Only certified standards of the highest purity available, for example, American Chemical Society grade, can be used for accurate quantitation. Standards containing linear and branched isomers are not commercially available for all applicable analytes. Currently, such standards are only available for PFOS and perfluorohexane sulfonic acid (PFHxS). Technical grades which contain branched and linear isomers are available for other PFAS, but these standards do not have the accuracy needed for quantitation purposes. These standards may, however, be qualitatively useful for verifying which peaks represent the branched isomers. Methods should specify the isomers quantified as well as the isomers included in standards used for quantitation purposes.

Isotope dilution is a quantitation technique that considers sample matrix effects on each individual PFAS quantitation in the most precise manner possible. This technique quantifies analytes of interest against the isotopically labeled analogs of the analytes, which are added to the sample prior to and after sample preparation. Addition prior to preparation helps account for loss of analyte during the preparation process, while addition after preparation to an aliquot of the sample extract accounts for the bias associated with the instrumentation. Methods using isotope dilution should include isotope recovery for each sample and analyte in data reports. Isotope analog recoveries should be reported, and minimum/maximum isotope recoveries may be required by specific analytical procedures. Low isotope recovery may indicate that quantitation was inadequate; the data are then reported as estimated values.

Mass calibration should occur at the frequency recommended by the instrument manufacturer and as needed based on QC indicators, such as calibration verifications. The instrument blanks, calibration curve, and initial and continual calibration verification requirements should be consistent with those published for other LC/MS/MS methods. The lowest calibration point should be a concentration at or below the limit of quantitation. A standard at the limit of quantitation concentration should be analyzed with each analytical batch to document the instrument's ability to accurately quantitate down to that concentration. Instrument blanks are critical in determining if the instrument is potentially affecting PFAS concentrations in samples.

Quantification by LC/MS/MS may be accomplished using a variety of techniques. For relatively simple matrices such as drinking water, Method 537 quantifies analytes by comparing the product ion of one precursor ion and retention time in samples to calibration standards. For more complex matrices, additional product ions and their ion ratios can be used to distinguish analytes from matrix interference. In an MS/MS system, an analyte can be fractured into more than one ion. By monitoring the area of each ion and comparing the ratio of those area counts, a more definitive identification can be made. This identification allows the analyst to distinguish true target analytes from false positives. This more detailed quantification is not required for drinking water matrices, but it is useful for more complex matrices.

As part of the laboratory selection process, the laboratory's analytical procedure should be evaluated to ensure these parameters are addressed in the documentation provided. In addition, the acceptance criteria for all the analytical QC elements should be evaluated to ensure that they are set at levels that meet the project's measurement quality objectives (MQOs). For DOD projects, these criteria can be found in the DOD QSM, Version 5.1, Appendix B, Table B-15 (USDOD 2017a).

4.3 Data Evaluation

Data evaluation is a critical step in any project; however, it becomes even more important when nonstandard methods are used, such as for PFAS. Without a standard method for media other than drinking water, laboratories' methods may vary greatly in their precision and accuracy. Over time, these methods become optimized based on new knowledge about sampling and analytical biases. Advances in instrumentation and analytical supplies (such as standards availability and improved analytical columns) often occur as well because of commercial demand. As a result, the precision and accuracy of the data generated by laboratories can change significantly over time, making it difficult to compare data generated over an extended time period. Thus, data evaluation should be performed using the most current knowledge on the state of science of PFAS.

Precision, accuracy, representativeness, comparability, completeness, and sensitivity (PARCCS) parameters should be assessed because they guide data evaluation (field collection and laboratory information). Data are reviewed in a

ED_004144A_00000101-01110

systematic way by looking at the results of each QC indicator of the PARCCS parameters (for example, spike recoveries and method blanks) to obtain an understanding of the overall quality of the data. The most important goal of data evaluation is to ensure that any limitations to the PFAS data generated are understood, which establishes confidence that the data meet site-specific needs. More information is available in the IDQTF (2005) and USEPA (2000a) Quality Assurance Project Plan documents.

5 Qualitative Analysis

Several methods employing indirect measurement have been developed that more comprehensively assess the range of PFAS contamination at a site. Two techniques are available to measure organofluorine (Dauchy et al. 2017; Willach, Brauch, and Lange 2016; Ritter et al. 2017):

- Adsorbable organic fluorine (AOF) paired with combustion ion chromatography (CIC) measure the combusted organofluorine content of a sample as fluoride on an IC.
- Proton induced gamma-ray emission (PIGE) spectroscopy measures elemental fluorine isolated on a thin surface.

Both techniques isolate organofluorine material on a sorptive material such as activated carbon or an anion exchange cartridge prior to measurement; neither technique is currently commercially available. A third technique, total oxidizable precursor assay (TOP assay or TOPA) converts PFAA precursor compounds to PFAAs through an oxidative digestion. The increase in PFAAs measured after the TOP assay, relative to before, is a conservative estimate of the total concentration of PFAA precursors present in a sample, because not all PFAS present will be subject to quantitation or reaction, and will remain as undetected PFAS. The PFAAs generated have perfluoroalkyl chain lengths equal to, or shorter than, the perfluoroalkyl chain lengths present in the precursors (Houtz et al. 2013; Houtz and Sedlak 2012; Weber et al. 2017; Dauchy et al. 2017). Finally, quantitative time of flight mass spectrometry (QTOF-MS) can be used to determine both the chemical formula and structure of unknown PFAS in a sample, but analytical standards are required for unequivocal structural identification.

Library research, preliminary identification of potential PFAS sources, and information gathered from patents can assist in the identification of PFAS using QTOF-MS (Newton et al. 2017; Moschet et al. 2017; Barzen-Hanson et al. 2017). These methods are not standardized through a published USEPA method and range in commercial availability. To date, these methods have not undergone multilaboratory validation. As a result, TOP assay, the most widely commercially available of the techniques, is typically accepted as a means of determining PFAS load on remediation substances to estimate the replacement cycle, but not for site characterization.

6 References and Acronyms

The references cited in this fact sheet, and the other ITRC PFAS fact sheets, are included in one combined list that is available on the ITRC web site. The combined acronyms list is also available on the ITRC web site.

Per- and Polyfluoroalkyl Substances (PFAS) Team Contacts

Robert Mueller • New Jersey Department of Environmental Protection
609-984-3910 • Bob.Mueller@dep.nj.gov

Virginia Yingling • Minnesota Department of Health
651-343-2890 • virginia.yingling@state.mn.us

March 2018

ITRC
50 F St. NW, Suite 350
Washington, DC 20001
itrcweb.org

ITRC Disclaimer

ERIS ENVIRONMENTAL RESEARCH INSTITUTE OF THE STATES

ECOS

ED_004144A_00000101-01111