EPA Document# EPA-740-R1-7014
May 2018
Office of Chemical Safety and
Pollution Prevention

United States
Environmental Protection Agency

Problem Formulation of the Risk Evaluation for Trichloroethylene

CASRN: 79-01-6

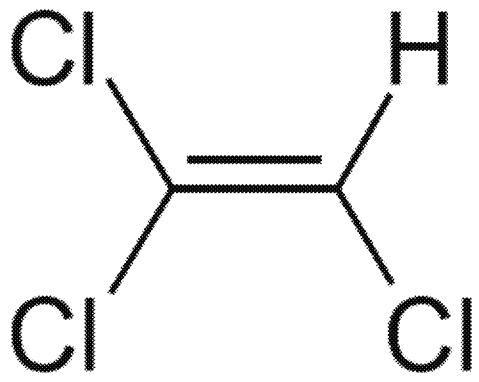

May 2018

TABLE OF CONTENTS

ACKNOWLEDGEMENTS **5**

ABBREVIATIONS **6**

EXECUTIVE SUMMARY **10**

1 INTRODUCTION **12**

1.1 Regulatory History 13
1.2 Assessment History 14
1.3 Data and Information Collection 16
1.4 Data Screening During Problem Formulation 17

2 PROBLEM FORMULATION **17**

2.1 Physical and Chemical Properties 18
2.2 Conditions of Use 19
2.2.1 Data and Information Sources 19
2.2.2 Identification of Conditions of Use 19
2.2.2.1 Categories and Subcategories Determined Not to Be Conditions of Use During Problem Formulation 20
2.2.2.2 Categories and Subcategories of Conditions of Use Included in the Scope of the Risk Evaluation 20
2.2.2.3 Overview of Conditions of Use and Lifecycle Diagram 25
2.3 Exposures 29
2.3.1 Fate and Transport 29
2.3.2 Releases to the Environment 31
2.3.3 Presence in the Environment and Biota 33
2.3.4 Environmental Exposures 34
2.3.5 Human Exposures 35
2.3.5.1 Occupational Exposures 35
2.3.5.2 Consumer Exposures 36
2.3.5.3 General Population Exposures 37
2.3.5.4 Potentially Exposed or Susceptible Subpopulations 38
2.4 Hazards (Effects) 39
2.4.1 Environmental Hazards 39
2.4.2 Human Health Hazards 44
2.4.2.1 Non-Cancer Hazards 44
2.4.2.2 Genotoxicity and Cancer Hazards 45
2.4.2.3 Potentially Exposed or Susceptible Subpopulations 46
2.5 Conceptual Models 46
2.5.1 Conceptual Model for Industrial and Commercial Activities and Uses: Potential Exposures and Hazards 47
2.5.2 Conceptual Model for Consumer Activities and Uses: Potential Exposures and Hazards 50
2.5.3 Conceptual Model for Environmental Releases and Wastes: Potential Exposures and Hazards 53
2.5.3.1 Pathways That EPA Plans to Include and Further Analyze in Risk Evaluation 53
2.5.3.2 Pathways that EPA Plans to Include But Not Further Analyze 53
2.5.3.3 Pathways that EPA Does Not Plan to Include in the Risk Evaluation 54
2.6 Analysis Plan 58

ED_004056A_00072837-00002

2.6.1 Exposure 58
2.6.1.1 Environmental Releases 58
2.6.1.2 Environmental Fate 61
2.6.1.3 Environmental Exposures 61
2.6.1.4 General Population 62
2.6.1.5 Occupational Exposures 62
2.6.1.6 Consumer Exposures 65
2.6.2 Hazards (Effects) 67
2.6.2.5 Environmental Hazards 67
2.6.2.6 Human Health Hazards 68
2.6.3 Risk Characterization 70

REFERENCES 72

APPENDICES 87

Appendix A REGULATORY HISTORY 87
A.1 Federal Laws and Regulations 87
A.2 State Laws and Regulations 93
A.3 International Laws and Regulations 94
Appendix B PROCESS, RELEASE AND OCCUPATIONAL EXPOSURE INFORMATION 96
B.1 Process Information 96
B.2 Occupational Exposure Data 108
B.3 References Related to Risk Evaluation – Environmental Release and Occupational Exposure 112
Appendix C SUPPORTING TABLES FOR INDUSTRIAL AND COMMERCIAL ACTIVITIES CONCEPTUAL MODEL 145
Appendix D SUPPORTING TABLE FOR CONSUMER ACTIVITIES AND USES CONCEPTUAL MODEL 174
Appendix E SUPPORTING TABLE FOR ENVIRONMENTAL RELEASES AND WASTES CONCEPTUAL MODEL 202
Appendix F INCLUSION AND EXCLUSION CRITERIA FOR FULL TEXT SCREENING 203
F.1 Inclusion Criteria for Data Sources Reporting Environmental Fate Data 203
F.2 Inclusion Criteria for Data Sources Reporting Engineering and Occupational Exposure Data 204
F.3 Inclusion Criteria for Data Sources Reporting Exposure Data on Consumers and Ecological Receptors 206
F.4 Inclusion Criteria for Data Sources Reporting Human Health Hazards 207
Appendix G List of Retracted Papers 209

LIST OF TABLES

Table 1-1. Assessment History of TCE 14
Table 2-1. Physical and Chemical Properties of TCE 18
Table 2-2. Categories and Subcategories Determined Not to Be Conditions of Use During Problem Formulation 20
Table 2-3. Categories and Subcategories of Conditions of Use Included in the Scope of the Risk Evaluation 21
Table 2-4. Production Volume of TCE in CDR Reporting Period (2012 to 2015) [a] 26
Table 2-5. Environmental Fate Characteristic of TCE 30
Table 2-6. Summary of TCE TRI Production-Related Waste Managed in 2015 (lbs) 31

ED_004056A_00072837-00003

Table 2-7. Summary of TCE TRI Releases to the Environment in 2015 (lbs) 31
Table 2-8. Ecological Hazard Characterization of TCE 42

LIST OF FIGURES

Figure 2-1. TCE Life Cycle Diagram 28
Figure 2-2. TCE Conceptual Model for Industrial and Commercial Activities and Uses: Potential Exposures and Hazards 49
Figure 2-3. TCE Conceptual Model for Consumer Activities and Uses: Potential Exposures and Hazards 52
Figure 2-4. TCE Conceptual Model for Environmental Releases and Wastes: Potential Exposures and Hazards 57

LIST OF APPENDIX TABLES

Table_Apx A-1. Federal Laws and Regulations 87
Table_Apx A-2. State Laws and Regulations 93
Table_Apx A-3. Regulatory Actions by Other Governments and Tribes 94
Table_Apx B-1. Mapping of Scenarios to Industry Sectors with TCE Personal Monitoring Air Samples Obtained from OSHA Inspections Conducted Between 2002 and 2017 109
Table_Apx B-2. Summary of Exposure Data from NIOSH HHEs [a] 111
Table_Apx B-3. Potentially Relevant Data Sources for Process Description Related Information for TCE 112
Table_Apx B-4. Potentially Relevant Data Sources for Estimated or Measured Release Data for TCE 121
Table_Apx B-5. Potentially Relevant Data Sources for Personal Exposure Monitoring and Area Monitoring Data for TCE 126
Table_Apx B-6. Potentially Relevant Data Sources for Engineering Controls and Personal Protective Equipment Information for TCE 137
Table_Apx C-1. Supporting Table for Industrial and Commercial Activities Conceptual Model 145
Table_Apx D-1. Consumer Activities and Uses Conceptual Model Supporting Table 174
Table_Apx E-1. Environmental Releases and Wastes Conceptual Model Supporting Table 202
Table_Apx F-1. Inclusion Criteria for Data Sources Reporting Engineering and Occupational Exposure Data 204
Table_Apx F-2. Engineering, Environmental Release and Occupational Data Necessary to Develop the Environmental Release and Occupational Exposure Assessments 205
Table_Apx F-3. Inclusion Criteria for the Data Sources Reporting Trichloroethylene Exposure Data on Consumers and Ecological Receptors 206
Table_Apx F-4. Inclusion and Exclusion Criteria for the Data Sources Reporting Human Health Hazards Related to TCE Exposure[a] 208

ED_004056A_00072837-00004

ACKNOWLEDGEMENTS

This report was developed by the United States Environmental Protection Agency (U.S. EPA), Office of Chemical Safety and Pollution Prevention (OCSPP), Office of Pollution Prevention and Toxics (OPPT).

Acknowledgements
The OPPT Assessment Team gratefully acknowledges participation and/or input from Intra-agency reviewers that included multiple offices within EPA, Inter-agency reviewers that included multiple Federal agencies, and assistance from EPA contractors GDIT (Contract No. CIO-SP3, HHSN316201200013W), ERG (Contract No. EP-W-12-006), Versar (Contract No. EP-W-17-006), ICF (Contract No. EPC14001) and SRC (Contract No. EP-W-12-003).

Docket
Supporting information can be found in public docket (Docket: EPA-HQ-OPPT-2016-0737).

Disclaimer
Reference herein to any specific commercial products, process or service by trade name, trademark, manufacturer or otherwise does not constitute or imply its endorsement, recommendation or favoring by the United States Government.

ED_004056A_00072837-00005

ABBREVIATIONS

°C	Degrees Celsius
ε_0	Vacuum Permittivity
ACGIH	American Conference of Industrial Hygienists
AEGL	Acute Exposure Guideline Level
AF	Assessment Factor
AQS	Air Quality System
ATCM	Airborne Toxic Control Measure
atm	Atmosphere(s)
ATSDR	Agency for Toxic Substances and Disease Registries
BAF	Bioaccumulation Factor
BCF	Bioconcentration Factor
BIOWIN	The EPI Suite™ module that predicts biodegradation rates
$BW^{3/4}$	body $weight^{3/4}$
CAA	Clean Air Act
CARB	California Air Resources Board
CASRN	Chemical Abstracts Service Registry Number
CBI	Confidential Business Information
CCR	California Code of Regulations
CDC	Centers for Disease Control and Prevention
CDR	Chemical Data Reporting
CEHD	Chemical Exposure Health Data
CEM	Consumer Exposure Model
CEPA	Canadian Environmental Protection Act
CERCLA	Comprehensive Environmental Response, Compensation, and Liability Act
CFC	Chlorofluorocarbon
CFR	Code of Federal Regulations
ChemSTEER	Chemical Screening Tool for Exposure and Environmental Releases
CHIRP	Chemical Risk Information Platform
ChV	Chronic Value
cm^3	Cubic Centimeter(s)
CNS	Central Nervous System
COC	Concentration of Concern
COU	Conditions of Use
CPCat	Chemical and Product Categories
CSCL	Chemical Substances Control Law
CWA	Clean Water Act
CYP2E1	Cytochrome P450 2E1
DMR	Discharge Monitoring Report
EC_{50}	Effect concentration at which 50% of test organisms exhibit an effect
ECCC	Environment and Climate Change Canada
ECHA	European Chemicals Agency
EDC	Ethylene Dichloride
E-FAST	Exposure and Fate Assessment Screening Tool
EG	Effluent Guidelines
EPA	Environmental Protection Agency
EPCRA	Emergency Planning and Community Right-to-Know Act
EPI Suite™	Estimation Program Interface Suite™
ESD	Emission Scenario Document

ED_004056A_00072837-00006

EU	European Union
FDA	Food and Drug Administration
FFDCA	Federal Food, Drug, and Cosmetic Act
FIFRA	Federal Insecticide, Fungicide, and Rodenticide Act
FR	Federal Register
g	Gram(s)
GACT	Generally Available Control Technology
GST	Glutathione-S-transferase
HAP	Hazardous Air Pollutant
HCFC	Hydrochlorofluorocarbon
HCl	Hydrochloric Acid
HEC	Human Equivalent Concentration
HFC	Hydrofluorocarbon
HHE	Health Hazard Evaluation
HPV	High Production Volume
Hr	Hour
IARC	International Agency for Research on Cancer
ICIS	Integrated Compliance Information System
IDLH	Immediately Dangerous to Life and Health
IMIS	Integrated Management Information System
IRIS	Integrated Risk Information System
ISHA	Industrial Safety and Health Act
ISOR	Initial Statement of Reasons
K_{oc}	Soil Organic Carbon-Water Partitioning Coefficient
K_{ow}	Octanol/Water Partition Coefficient
kg	Kilogram(s)
L	Liter(s)
lb	Pound(s)
LC_{50}	Lethal Concentration at which 50% of test organisms die
LOAEL	Lowest-observed-adverse-effect-level
LOEC	Lowest-observable-effect Concentration
m^3	Cubic Meter(s)
MACT	Maximum Achievable Control Technology
MATC	Maximum Acceptable Toxicant Concentration
MCCEM	Multi-Chamber Concentration and Exposure Model
MCL	Maximum Contaminant Level
MCLG	Maximum Contaminant Level Goal
mg	Milligram(s)
mmHg	Millimeter(s) of Mercury
MOA	Mode of Action
mPa·s	Millipascal(s)-Second
MSDS	Material Safety Data Sheet
MSW	Municipal Solid Waste
NAICS	North American Industry Classification System
NATA	National Scale Air-Toxics Assessment
NCEA	National Center for Environmental Assessment
NICNAS	Australia National Industrial Chemicals Notification and Assessment Scheme
NCP	National Contingency Plan
NEI	National Emissions Inventory

ED_004056A_00072837-00007

NESHAP	National Emission Standards for Hazardous Air Pollutants
NHANES	National Health and Nutrition Examination Survey
NICNAS	National Industrial Chemicals Notification and Assessment Scheme
NIH	National Institute of Health
NICNAS	National Industrial Chemicals Notification and Assessment Scheme
NIOSH	National Institute for Occupational Safety and Health
NITE	National Institute of Technology and Evaluation
NOAEL	No-Observed-Adverse-Effect-Level
NOEC	No-observable-effect Concentration
NPDES	National Pollutant Discharge Elimination System
NPDWR	National Primary Drinking Water Regulation
NRC	National Research Council
NTP	National Toxicology Program
NWIS	National Water Information System
OCSPP	Office of Chemical Safety and Pollution Prevention
OECD	Organization for Economic Co-operation and Development
OEHHA	Office of Environmental Health Hazard Assessment
OEL	Occupational Exposure Limits
ONU	Occupational Non-User
OPPT	Office of Pollution Prevention and Toxics
OSHA	Occupational Safety and Health Administration
OST	Office of Science and Technology
OTVD	Open-Top Vapor Degreaser
OW	Office of Water
PBPK	Physiologically-Based Pharmacokinetic
PBZ	Personal Breathing Zone
PCE	Tetrachloroethylene
PECO	Population, Exposure, Comparator, and Outcome
PEL	Permissible Exposure Limit
PESS	Potentially Exposed or Susceptible Subpopulations
POD	Point of Departure
POTW	Publicly Owned Treatment Works
ppb	Part(s) per Billion
PPE	Personal Protective Equipment
ppm	Part(s) per Million
PSD	Particle Size Distribution
PV	Production Volume
QC	Quality Control
QSAR	Quantitative Structure Activity Relationship
RCRA	Resource Conservation and Recovery Act
REACH	Registration, Evaluation, Authorisation and Restriction of Chemicals
REL	Relative Exposure Limit
RTR	Risk and Technology Review
SDS	Safety Data Sheet
SDWA	Safe Drinking Water Act
SIDS	Screening Information Dataset
SNUN	Significant New Use Notice
SNUR	Significant New Use Rule
SOCMI	Synthetic Organic Chemical Manufacturing Industry

ED_004056A_00072837-00008

SPARC	SPARC Performs Automated Reasoning in Chemistry
SpERC	Specific Environmental Release Categories
STEL	Short-Term Exposure Limit
STP model	Sewage Treatment Plant model
STORET	STOrage and RETrieval
TCCR	Transparent, clear, consistent, and reasonable
TCE	Trichloroethylene
TLV	Threshold Limit Value
TRI	Toxics Release Inventory
TSCA	Toxic Substances Control Act
TWA	Time Weighted Average
UIC	Underground Injection Control
U.S.	United States
UV	Ultraviolet
USGS	United States Geological Survey
VOC	Volatile Organic Compound
VP	Vapor Pressure
Yr	Year(s)

ED_004056A_00072837-00009

EXECUTIVE SUMMARY

TSCA § 6(b)(4) requires the U.S. Environmental Protection Agency (EPA) to establish a risk evaluation process. In performing risk evaluations for existing chemicals, EPA is directed to "determine whether a chemical substance presents an unreasonable risk of injury to health or the environment, without consideration of costs or other non-risk factors, including an unreasonable risk to a potentially exposed or susceptible subpopulation identified as relevant to the risk evaluation by the Administrator under the conditions of use." In December of 2016, EPA published a list of 10 chemical substances that are the subject of the Agency's initial chemical risk evaluations (81 FR 91927), as required by TSCA § 6(b)(2)(A). Trichloroethylene was one of these chemicals.

TSCA § 6(b)(4)(D) requires that EPA publish the scope of the risk evaluation to be conducted, including the hazards, exposures, conditions of use and potentially exposed or susceptible subpopulations that the Administrator expects to consider. In June 2017, EPA published the Scope of the Risk Evaluation for trichloroethylene (EPA-HQ-OPPT-2016-0737-0057; U.S. EPA, 2017d). As explained in the Scope Document, because there was insufficient time for EPA to provide an opportunity for comment on a draft of the scope, as EPA intends to do for future scope documents, EPA is publishing and taking public comment on a problem formulation document to refine the current scope, as an additional interim step prior to publication of the draft risk evaluation for trichloroethylene. Comments received on this problem formulation document will inform development of the draft risk evaluation.

This problem formulation document refines the conditions of use, exposures and hazards presented in the scope of the risk evaluation for trichloroethylene and presents refined conceptual models and analysis plans that describe how EPA expects to evaluate the risk for trichloroethylene.

Trichloroethylene, also known as TCE, is a volatile organic liquid that is classified as a human carcinogen. TCE is subject to numerous federal and state regulations and reporting requirements. In the 2014 TCE risk assessment (U.S. EPA, 2014c), EPA assessed inhalation risks from TCE in vapor and aerosol degreasing, spot cleaning at dry cleaning facilities and arts and craft uses and also completed four supplemental analyses. Based on these analyses, EPA published two proposed rules to address the risks presented by TCE use in vapor degreasing and in commercial and consumer aerosol degreasing and for spot cleaning at dry cleaning facilities. TCE is designated as a Hazardous Air Pollutant (HAP) under the Clean Air Act (CAA), a regulated drinking water contaminant under the Safe Drinking Water Act (SDWA), and a toxic pollutant under the Clean Water Act (CWA). TCE is widely used in industrial and commercial processes.

Information on domestic manufacture, processing, use, and disposal of TCE is available to EPA through its Chemical Data Reporting (CDR) Rule, issued under the TSCA, as well as through the Toxics Release Inventory (TRI). In 2015, approximately 172 million pounds of TCE was manufactured or imported in the US. An estimated 83.6% of TCE's annual production volume is used as an intermediate in the manufacture of hydrofluorocarbon (HFC-134a – an alternative to the refrigerant CFC-12). Another 14.7% of TCE production volume is used as a degreasing solvent, leaving approximately 1.7% for other uses, including consumer uses. Based on 2015 TRI data, most reported environmental releases of TCE are to air, with much lower volumes disposed to land or released to water. It is expected to be moderately persistent in the environment and has a low bioaccumulation potential.

This document presents the potential exposures that may result from the conditions of use of TCE. Exposure may occur through inhalation, oral and dermal pathways, due to trichloroethylene's widespread presence in a variety of environmental media. Exposures to the general population may

ED_004056A_00072837-00010

occur from industrial and/or commercial uses; industrial releases to air, water or land; and other conditions of use. Workers and occupational non-users may be exposed to trichloroethylene during a variety of conditions of use, such as manufacturing, processing and industrial and commercial uses, including uses in paint and coatings, adhesives and degreasing. EPA expects that the highest exposures to trichloroethylene generally involve workers in industrial and commercial settings. Trichloroethylene can be found in numerous products and can, therefore, result in exposures to commercial and consumer users in indoor or outdoor environments. For trichloroethylene, EPA considers workers, occupational non-users, consumers, bystanders, and certain other groups of individuals who may experience greater exposures than the general population due to proximity to conditions of use to be potentially exposed or susceptible subpopulations. EPA will evaluate whether groups of individuals within the general population may be exposed via pathways that are distinct from the general population due to unique characteristics (e.g., life stage, behaviors, activities, duration) that increase exposure, and whether groups of individuals have heightened susceptibility, and should therefore be considered potentially exposed or susceptible subpopulations for purposes of the risk evaluation. For environmental release pathways, EPA plans to further analyze surface water exposure to aquatic species (i.e. aquatic plants) in the risk evaluation.

TCE has been the subject of numerous health hazard and risk assessments. TCE toxicity was assessed in 2011 under the *EPA Integrated Risk Information System (IRIS) Toxicological Review of Trichloroethylene* (U.S. EPA, 2011c), which served as the toxicological basis for the 2014 final TCE risk assessment (U.S. EPA, 2014c). For non-cancer effects, TCE exposure has been associated with acute toxicity, liver toxicity, kidney toxicity, reproductive/developmental toxicity, neurotoxicity, immunotoxicity, and sensitization. TCE is also carcinogenic to humans by all routes of exposures, as documented in the TCE IRIS assessment, through both genotoxic and non-genotoxic mechanisms. These hazards will be evaluated based on the specific exposure scenarios identified.

The revised conceptual models presented in this problem formulation identify conditions of use; exposure pathways (e.g., media); exposure routes (e.g., inhalation, dermal, oral); potentially exposed or susceptible subpopulations; and hazards EPA expects to analyze further in the risk evaluation. The initial conceptual models provided in the scope document were revised during problem formulation based on evaluation of reasonably available information for physical and chemical properties, fate, exposures, hazards, and conditions of use and based upon consideration of other statutory and regulatory authorities. In each problem formulation document for the first 10 chemical substances, EPA also refined the activities, hazards, and exposure pathways that will be included in and excluded from the risk evaluation.

EPA's overall objectives in the risk evaluation process are to conduct timely, relevant, high-quality, and scientifically credible risk evaluations within the statutory deadlines, and to evaluate the conditions of use that raise greatest potential for risk 82 FR 33726, 33728 (July 20, 2017).

1 INTRODUCTION

This document presents for comment the problem formulation of the risk evaluation to be conducted for TCE under the Frank R. Lautenberg Chemical Safety for the 21st Century Act. The Frank R. Lautenberg Chemical Safety for the 21st Century Act amended the Toxic Substances Control Act (TSCA), the Nation's primary chemicals management law, on June 22, 2016. The new law includes statutory requirements and deadlines for actions related to conducting risk evaluations of existing chemicals.

In December of 2016, EPA published a list of 10 chemical substances that are the subject of the Agency's initial chemical risk evaluations (81 FR 91927), as required by TSCA § 6(b)(2)(A). These 10 chemical substances were drawn from the 2014 update of EPA's TSCA Work Plan for Chemical Assessments, a list of chemicals that EPA identified in 2012 and updated in 2014 (currently totaling 90 chemicals) for further assessment under TSCA. EPA's designation of the first 10 chemical substances constituted the initiation of the risk evaluation process for each of these chemical substances, pursuant to the requirements of TSCA § 6(b)(4).

TSCA § 6(b)(4)(D) requires that EPA publish the scope of the risk evaluation to be conducted, including the hazards, exposures, conditions of use and potentially exposed or susceptible subpopulations that the Administrator expects to consider, within 6 months after the initiation of a risk evaluation. The scope documents for all first 10 chemical substances were issued on June 22, 2017. The first 10 problem formulation documents are a refinement of what was presented in the first 10 scope documents. TSCA § 6(b)(4)(D) does not distinguish between scoping and problem formulation, and requires EPA to issue scope documents that include information about the chemical substance, such as the hazards, exposures, conditions of use, and the potentially exposed or susceptible subpopulations that the Administrator expects to consider in the risk evaluation. In the future, EPA expects scoping and problem formulation to be completed prior to the issuance of scope documents and intends to issue scope documents that include problem formulation.

As explained in the scope document, because there was insufficient time for EPA to provide an opportunity for comment on a draft of the scope, as EPA intends to do for future scope documents, EPA is publishing and taking public comment on a problem formulation document to refine the current scope, as an additional interim step prior to publication of the draft risk evaluation for TCE. Comments received on this problem formulation document will inform development of the draft risk evaluation.

The Agency defines problem formulation as the analytical phase of the risk assessment in which "the purpose for the assessment is articulated, the problem is defined and a plan for analyzing and characterizing risk is determined" (U.S. EPA, 2014b). The outcome of problem formulation is a conceptual model(s) and an analysis plan. The conceptual model describes the linkages between stressors and adverse human health effects, including the stressor(s), exposure pathway(s), exposed lifestage(s) and population(s), and endpoint(s) that will be addressed in the risk evaluation (U.S. EPA, 2014b). The analysis plan follows the development of the conceptual model(s) and is intended to describe the approach for conducting the risk evaluation, including its design, methods and key inputs and intended outputs as described in the EPA Human Health Risk Assessment Framework (U.S. EPA, 2014b). The problem formulation documents refine the initial conceptual models and analysis plans that were provided in the scope documents.

First, EPA has removed from the risk evaluation any activities and exposure pathways that EPA has concluded do not warrant inclusion in the risk evaluation. For example, for some activities which were listed as "conditions of use" in the scope document, EPA has insufficient information following the further investigations during problem formulation to find they are circumstances under which the

ED_004056A_00072837-00012

chemical is actually "intended, known, or reasonably foreseen to be manufactured, processed, distributed in commerce, used, or disposed of."

Second, EPA also identified certain exposure pathways that are under the jurisdiction of regulatory programs and associated analytical processes carried out under other EPA-administered environmental statutes – namely, the Clean Air Act (CAA), the Safe Drinking Water Act (SDWA), the Clean Water Act (CWA), and the Resource Conservation and Recovery Act (RCRA) – and which EPA does not expect to include in the risk evaluation.

As a general matter, EPA believes that certain programs under other Federal environmental laws adequately assess and effectively manage the risks for the covered exposure pathways. To use Agency resources efficiently under the TSCA program, to avoid duplicating efforts taken pursuant to other Agency programs, to maximize scientific and analytical efforts, and to meet the three-year statutory deadline, EPA is planning to exercise its discretion under TSCA 6(b)(4)(D) to focus its analytical efforts on exposures that are likely to present the greatest concern and consequently merit a risk evaluation under TSCA, by excluding, on a case-by-case basis, certain exposure pathways that fall under the jurisdiction of other EPA-administered statutes.[1] EPA does not expect to include any such excluded pathways as further explained below in the risk evaluation. The provisions of various EPA-administered environmental statutes and their implementing regulations represent the judgment of Congress and the Administrator, respectively, as to the degree of health and environmental risk reduction that is sufficient under the various environmental statutes.

Third, EPA identified any conditions of use, hazards, or exposure pathways which were included in the scope document and that EPA expects to include in the risk evaluation but which EPA does not plan to further analyze in the risk evaluation. EPA expects to be able to reach conclusions about particular conditions of use, hazards or exposure pathways without further analysis and therefore plans to conduct no further analysis on those conditions of use, hazards or exposure pathways in order to focus the Agency's resources on more extensive or quantitative analyses. Each risk evaluation will be "fit-for-purpose," meaning not all conditions of use will warrant the same level of evaluation and the Agency may be able to reach some conclusions without comprehensive or quantitative risk evaluations. 82 FR 33726, 33734, 33739 (July 20, 2017).

EPA received comments on the published scope document for trichloroethylene and has considered the comments specific to trichloroethylene in this problem formulation document. EPA is soliciting public comment on this problem formulation document and when the draft risk evaluation is issued the Agency intends to respond to comments that are submitted. In its draft risk evaluation, EPA may revise the conclusions and approaches contained in this problem formulations, including the conditions of use and pathways covered and the conceptual models and analysis plans, based on comments received.

1.1 Regulatory History

EPA conducted a search of existing domestic and international laws, regulations and assessments pertaining to TCE. EPA compiled this summary from data available from federal, state, international and other government sources, as cited in Appendix A. EPA evaluated and considered the impact of

[1] As explained in the final rule for chemical risk evaluation procedures, "EPA may, on a case-by-case basis, exclude certain activities that EPA has determined to be conditions of use in order to focus its analytical efforts on those exposures that are likely to present the greatest concern, and consequently merit an unreasonable risk determination." [82 FR 33726, 33729 (July 20, 2017)]

existing laws and regulations (e.g., regulations on landfill disposal, design, and operations) in the problem formulation step to determine what, if any, further analysis might be necessary as part of the risk evaluation. Consideration of the nexus between these existing regulations and TSCA uses may additionally be made as detailed/specific conditions of use and exposure scenarios are developed in conducting the analysis phase of the risk evaluation.

Federal Laws and Regulations
TCE is subject to federal statutes or regulations, other than TSCA, that are implemented by other offices within EPA and/or other federal agencies/departments. A summary of federal laws, regulations and implementing authorities is provided in Appendix A.1.

State Laws and Regulations
TCE is subject to state statutes or regulations implemented by state agencies or departments. A summary of state laws, regulations and implementing authorities is provided in Appendix A.2.

Laws and Regulations in Other Countries and International Treaties or Agreements
TCE is subject to statutes or regulations in countries other than the United States and/or international treaties and/or agreements. A summary of these laws, regulations, treaties and/or agreements is provided in Appendix A.3.

1.2 Assessment History

EPA has identified assessments conducted by other EPA Programs and other organizations (see Table 1-1). Depending on the source, these assessments may include information on conditions of use, hazards, exposures and potentially exposed or susceptible subpopulations. Table 1-1 shows the assessments that have been conducted. EPA found no additional assessments beyond those listed in the Scope Document.

In addition to using this information, EPA intends to conduct a full review of the data collected [see *Trichloroethylene (CASRN 79-01-6) Bibliography: Supplemental File for the TSCA Scope Document* (EPA-HQ-OPPT-2016-0737; U.S. EPA, 2017g) using the literature search strategy (see *Strategy for Conducting Literature Searches for Trichloroethylene (TCE): Supplemental Document to the TSCA Scope Document, CASRN: 79-01-6*, EPA-HQ-OPPT-2016-0737)] to ensure that EPA is considering information that has been made available since these assessments were conducted.

The final Work Plan Chemical Risk Assessment of TCE was used to support two proposed rules under TSCA section 6 (81 FR 91592; December 16, 2016; 82 FR 7432; January 19, 2017) to address risks from commercial and consumer solvent degreasing (aerosol and vapor), consumer use as a spray-applied protective coating for arts and crafts and commercial use as a spot remover at dry-cleaning facilities. It was also considered in development of a Significant New Use Rule (SNUR) for TCE (81 FR 20535; April 8, 2016).

Table 1-1. Assessment History of TCE

Authoring Organization	Assessment
EPA Assessments	
Office of Chemical Safety and Pollution Prevention (OCSPP)/ Office of Pollution Prevention and Toxics (OPPT)	TSCA Work Plan Chemical Risk Assessment Trichloroethylene: Degreasing, Spot Cleaning and Arts & Crafts Use (U.S. EPA, 2014c)

ED_004056A_00072837-00014

Authoring Organization	Assessment
OCSPP/OPPT	Supplemental Occupational Exposure and Risk Reduction Technical Report in Support of Risk Management Options for Trichloroethylene (TCE) Use in Aerosol Degreasing (U.S. EPA, 2016d)
OCSPP/OPPT	Supplemental Exposure and Risk Reduction Technical Report in Support of Risk Management Options for Trichloroethylene (TCE) Use in Consumer Aerosol Degreasing (U.S. EPA, 2016c)
OCSPP/OPPT	Supplemental Occupational Exposure and Risk Reduction Technical Report in Support of Risk Management Options for Trichloroethylene (TCE) Use in Spot Cleaning (U.S. EPA, 2016e)
OCSPP/OPPT	Supplemental Occupational Exposure and Risk Reduction Technical Report in Support of Risk Management Options for Trichloroethylene (TCE) Use in Vapor Degreasing [RIN 2070-AK11] (U.S. EPA, 2016f)
Integrated Risk Information System (IRIS)	Toxicological Review of Trichloroethylene (U.S. EPA, 2011c)
National Center for Environmental Assessment (NCEA)	Sources, Emission and Exposure for Trichloroethylene (TCE) and Related Chemicals (U.S. EPA, 2001)
Office of Water (OW)/ Office of Science and Technology (OST)	Update of Human Health Ambient Water Quality Criteria: Trichloroethylene (TCE) 79-01-6 (U.S. EPA, 2015)
Other U.S.-Based Organizations	
Agency for Toxic Substances and Disease Registries (ATSDR)	Draft Toxicological Profile for Trichloroethylene (ATSDR, 2014a)
National Research Council (NRC)	Assessing the Human Health Risks of Trichloroethylene: Key Scientific Issues (NRC, 2006)
Office of Environmental Health Hazard Assessment (OEHHA), Pesticide and Environmental Toxicology Section	Public Heath Goal for Trichloroethylene in Drinking Water (CalEPA, 2009)
International	
Institute for Health and Consumer Protection, European Chemicals Bureau	European Union Risk Assessment Report, Trichloroethylene (EC, 2004)
Australia National Industrial Chemicals Notification and Assessment Scheme (NICNAS)	Trichloroethylene: Priority Existing Chemical Assessment Report No. 8 (NICNAS, 2000)

ED_004056A_00072837-00015

Authoring Organization	Assessment
Environment and Climate Change Canada (ECCC)	Canadian Environmental Protection Act Priority Substances List Assessment Report: Trichloroethylene (Environment Canada, 1993).

1.3 Data and Information Collection

EPA/OPPT generally applies a systematic review process and workflow that includes: (1) data collection, (2) data evaluation and (3) data integration of the scientific data used in risk evaluations developed under TSCA. Scientific analysis is often iterative in nature as new knowledge is obtained. Hence, EPA/OPPT expects that multiple refinements regarding data collection will occur during the process of risk evaluation. Additional information that may be considered and was not part of the initial comprehensive bibliographies will be documented in the Draft Risk Evaluation for TCE.

Data Collection: Data Search

EPA/OPPT conducted chemical-specific searches for data and information on: physical and chemical properties; environmental fate and transport; conditions of use information; environmental exposures, human exposures, including potentially exposed or susceptible subpopulations; ecological hazard, human health hazard, including potentially exposed or susceptible subpopulations.

EPA/OPPT designed its initial data search to be broad enough to capture a comprehensive set of sources containing data and/or information potentially relevant to the risk evaluation. Generally, the search was not limited by date and was conducted on a wide range of data sources, including but not limited to: peer-reviewed literature and gray literature (e.g., publicly-available industry reports, trade association resources, government reports). When available, EPA/OPPT relied on the search strategies from recent assessments, such as EPA Integrated Risk Information System (IRIS) assessments and the NTP *Report on Carcinogens,* to identify relevant references and supplemented these searches to identify relevant information published after the end date of the previous search to capture more recent literature. *Strategy for Conducting Literature Searches for Trichloroethylene (TCE): Supplemental Document to the TSCA Scope Document, CASRN: 79-01-6* (EPA-HQ-OPPT-2016-0737) provides details about the data sources and search terms that were used in the literature search.

Data Collection: Data Screening

Following the data search, references were screened and categorized using selection criteria outlined in the *Strategy for Conducting Literature Searches for Trichloroethylene (TCE): Supplemental Document to the TSCA Scope Document, CASRN: 79-01-6* (EPA-HQ-OPPT-2016-0737). Titles and abstracts were screened against the criteria as a first step with the goal of identifying a smaller subset of the relevant data to move into the subsequent data extraction and data evaluation steps. Prior to full-text review, EPA/OPPT anticipates refinements to the search and screening strategies, as informed by an evaluation of the performance of the initial title/abstract screening and categorization process.

The categorization scheme (or tagging structure) used for data screening varies by scientific discipline (i.e., physical and chemical properties; environmental fate and transport; chemical use/conditions of use information; environmental exposures, human exposures, including potentially exposed or susceptible subpopulations identified by virtue of greater exposure; human health hazard, including potentially exposed or susceptible subpopulations identified by virtue of greater susceptibility; and ecological hazard), but within each data set, there are two broad categories or data tags: (1) *on-topic* references or (2) *off-topic* references. *On-topic* references are those that may contain data and/or information relevant to the risk evaluation. *Off-topic* references are those that do not appear to contain data or information

ED_004056A_00072837-00016

relevant to the risk evaluation. The *Strategy for Conducting Literature Searches for Trichloroethylene (TCE): Supplemental Document to the TSCA Scope Document, CASRN: 79-01-6* (EPA-HQ-OPPT-2016-0737) discusses the inclusion and exclusion criteria that EPA/OPPT used to categorize references as *on-topic* or *off-topic*.

Additional data screening using sub-categories (or sub-tags) was also performed to facilitate further sorting of data/information. For example, identifying references by source type (e.g., published peer-reviewed journal article, government report); data type (e.g., primary data, review article); human health hazard (e.g., liver toxicity, cancer, reproductive toxicity); or chemical-specific and use-specific data or information. These sub-categories are described in the supplemental document, *Strategy for Conducting Literature Searches for Trichloroethylene (TCE): Supplemental Document to the TSCA Scope Document, CASRN: 79-01-6* (EPA-HQ-OPPT-2016-0737) and will be used to organize the different streams of data during the stages of data evaluation and data integration steps of systematic review.

Results of the initial search and categorization results can be found in the *Tricholoroethylene (79-01-6) Bibliography: Supplemental File for the TSCA Scope Document* (EPA-HQ-OPPT-2016-0737; U.S. EPA, 2017g). This document provides a comprehensive list (bibliography) of the sources of data identified by the initial search and the initial categorization for *on-topic* and *off-topic* references. Because systematic review is an iterative process, EPA/OPPT expects that some references may move from the *on-topic* to the *off-topic* categories, and vice versa. Moreover, targeted supplemental searches may also be conducted to address specific needs for the analysis phase (e.g., to locate specific data needed for modeling); hence, additional *on-topic* references not initially identified in the initial search may be identified as the systematic review process proceeds.

1.4 Data Screening During Problem Formulation

EPA/OPPT is in the process of completing the full text screening of the *on-topic* references identified in the *Trichloroethylene (CASRN 79-01-6) Bibliography: Supplemental File for the TSCA Scope Document* (EPA-HQ-OPPT-2016-0737; U.S. EPA, 2017g). The screening process at the full-text level is described in the *Application of Systematic Review in TSCA Risk Evaluations* (U.S. EPA, 2018). Appendix F provides the inclusion and exclusion criteria applied at the full text screening. The eligibility criteria are guided by the analytical considerations in the revised conceptual models and analysis plan, as discussed in the problem formulation document. Thus, it is expected that the number of data/information sources entering evaluation is reduced to those that are relevant to address the technical approach and issues described in the analysis plan of this document.

Following the screening process, the quality of the included data/information sources will be assessed using the evaluation strategies that are described in the *Application of Systematic Review in TSCA Risk Evaluations* (U.S. EPA, 2018).

2 PROBLEM FORMULATION

As required by TSCA, the scope of the risk evaluation identifies the conditions of use, hazards, exposures and potentially exposed or susceptible subpopulations that the Administrator expects to consider. To communicate and visually convey the relationships between these components, EPA included in the scope document a life cycle diagram and conceptual models that describe the actual or potential relationships between TCE and human and ecological receptors. During the problem formulation, EPA revised the conceptual models based on further data gathering and analysis as presented in this Problem Formulation document. An updated analysis plan is also included which

identifies, to the extent feasible, the approaches and methods that EPA may use to assess exposures, effects (hazards) and risks under the conditions of use of TCE.

2.1 Physical and Chemical Properties

Physical-chemical properties influence the environmental behavior and the toxic properties of a chemical, thereby informing the potential conditions of use, exposure pathways and routes and hazards that EPA intends to consider. For scope development, EPA considered the measured or estimated physical-chemical properties set forth in Table 2-1 and EPA found no additional information during problem formulation that would change these values.

TCE is a colorless liquid with a pleasant, sweet odor resembling that of chloroform. It is considered a volatile organic compound (VOC) because of its moderate boiling point, 87.2°C, and high vapor pressure, 73.46 mm Hg at 25°C. TCE is moderately water soluble (1.280 g/L at 25°C), and has a log octanol/water partition coefficient (K_{ow}) of 2.42. The density of TCE, 1.46 g/m^3 at 20°C, is greater than that of water.

Table 2-1. Physical and Chemical Properties of TCE

Property	Value [a]	References
Molecular Formula	C_2HCl_3	
Molecular Weight	131.39 g/mole	
Physical Form	Colorless, liquid, sweet, pleasant odor, resembles chloroform	O'Neil et al. (2006)
Melting Point	-84.7°C	Lide (2007)
Boiling Point	87.2°C	Lide (2007)
Density	1.46 g/cm^3 at 20°C	EC (2000)
Vapor Pressure	73.46 mmHg at 25°C	Daubert and Danner (1989)
Vapor Density	4.53	O'Neil et al. (2006)
Water Solubility	1,280 mg/L at 25°C	Horvath et al. (1999)
Octanol/Water Partition Coefficient (Log K_{ow})	2.42 (Estimated)	U.S. EPA (2012a)
Henry's Law Constant	9.85E-03 atm·m^3/mole	Leighton and Calo (1981)
Flash Point	90°C (closed cup)	EC (2000)
Auto Flammability	410°C (Estimated)	U.S. EPA (2012a)
Viscosity	0.53 mPa·s at 25°C	Weast and Selby (1966)
Refractive Index	1.4775 at 20°C	O'Neil et al. (2001)
Dielectric Constant	3.4 ε_0 at 16°C	Weast and Selby (1966)

[a] Measured unless otherwise noted

ED_004056A_00072837-00018

2.2 Conditions of Use

TSCA § 3(4) defines the conditions of use as ''the circumstances, as determined by the Administrator, under which a chemical substance is intended, known, or reasonably foreseen to be manufactured, processed, distributed in commerce, used, or disposed of.''

2.2.1 Data and Information Sources

In the scope documents, EPA identified, based on reasonably available information, the conditions of use for the subject chemicals. EPA searched a number of available data sources. Based on this search, EPA published a preliminary list of information and sources related to chemical conditions of use (e.g., *Use and Market Profile for TCE and Preliminary Information on Manufacturing, Processing, Distribution, Use, and Disposal: TCEPreliminary Information on Manufacturing, Processing, Distribution, Use, and Disposal: TCE:* EPA-HQ-OPPT-2016-0737-0056) prior to a February 2017 public meeting on scoping efforts for risk evaluation convened to solicit comment and input from the public. EPA also convened meetings with companies, industry groups, chemical users and other stakeholders to aid in identifying conditions of use and verifying conditions of use identified by EPA. The information and input received from the public and stakeholder meetings has been incorporated into this problem formulation document to the extent appropriate Thus, EPA believes the identified manufacture, processing, distribution, use and disposal activities identified in these documents constitute the intended, known, and reasonably foreseeable activities associated with the subject chemical, based on reasonably available information.

2.2.2 Identification of Conditions of Use

To determine the current conditions of use of TCE, and, inversely, activities that do not qualify as conditions of use, EPA conducted extensive research and outreach. This included EPA's review of published literature and online databases including the most recent data available from EPA's Chemical Data Reporting program (CDR) and Safety Data Sheets (SDSs). EPA also conducted online research by reviewing company websites of potential manufacturers, importers, distributors, retailers, or other users of TCE and queried government and commercial trade databases. EPA also received comments on the Scope of the Risk Evaluation for TCE (EPA-HQ-OPPT-2016-0737-0057; U.S. EPA, 2017d) that were used to determine the current conditions of use. Scope of the Risk Evaluation for TCE Scope of the Risk Evaluation for TCE (EPA-HQ-OPPT-2016-0737) that were used to determine the current conditions of use. In addition, EPA convened meetings with companies, industry groups, chemical users, states, environmental groups, and other stakeholders to aid in identifying conditions of use and verifying conditions of use identified by EPA.

EPA has removed from the risk evaluation certain activities that EPA has concluded to not constitute conditions of use – for example, EPA has insufficient information to find certain activities are circumstances under which the chemical is actually "intended, known, or reasonably foreseen to be manufactured, processed, distributed in commerce, used or disposed of". EPA has also identified any conditions of use that EPA does not plan to include in the risk evaluation. As explained in the final rule for Procedures for Chemical Risk Evaluation Under the Amended Toxic Substances Control Act, TSCA section 6(b)(4)(D) requires EPA to identify "the hazards, exposures, conditions of use, and the potentially exposed or susceptible subpopulations that the Agency expects to consider in a risk evaluation," suggesting that EPA may exclude certain activities that EPA has determined to be conditions of use on a case-by-case basis. (82 FR 33736, 33729; July 20, 2017). For example, EPA may exclude conditions of use that the Agency has sufficient basis to conclude would present only de

minimis exposures or otherwise insignificant risks (such as some uses in a closed system that effectively preclude exposure or use as an intermediate).

The activities that EPA no longer believes are conditions of use or that were otherwise excluded during problem formulation are described in Section 2.2.2.1. The conditions of use included in the scope of the risk evaluation are summarized in Section 2.2.2.2.

2.2.2.1 Categories and Subcategories Determined Not to Be Conditions of Use During Problem Formulation

EPA has conducted public outreach and literature searches to collect information about TCE's conditions of use and has reviewed reasonably available information obtained or possessed by EPA concerning activities associated with TCE. As a result of that analysis during problem formulation, EPA determined there is insufficient information to support a finding that certain activities which were listed as conditions of use in the Scope Document (EPA-HQ-OPPT-2016-0737-0057; U.S. EPA, 2017d) for TCE actually constitute "circumstances…under which a chemical substance is intended, known, or reasonably foreseen to be manufactured, processed, distributed in commerce, used, or disposed of." Consequently, EPA intends to exclude these activities not considered conditions of use from the scope of the evaluation.

As shown in Table 2-22, these activities consist of paints and coatings for consumer use. EPA no longer believes that paints and coatings for consumer use contain TCE, as evidenced by SNUR on TCE for Certain Consumer Products (81 FR 20535). Consequently, EPA intends to exclude consumer uses of paints and coatings from the scope of the evaluation.

Table 2-2. Categories and Subcategories Determined Not to Be Conditions of Use During Problem Formulation

Life Cycle Stage	Category [a]	Subcategory	References
Consumer use	Paints and Coatings	Diluent in solvent-based paints and coatings	TCE SNUR on consumer products (81 FR 20535)
[a] These categories are no longer shown in the Life Cycle Diagram.			

2.2.2.2 Categories and Subcategories of Conditions of Use Included in the Scope of the Risk Evaluation

EPA has conducted public outreach and literature searches to collect information about trichloroethylene's conditions of use and has reviewed reasonably available information obtained or possessed by EPA concerning activities associated with trichloroethylene. Based on this research and outreach, other than the category and subcategory described above in Section 2.2.2.1, EPA does not have reason to believe that any conditions of use identified in the trichloroethylene scope should be excluded from risk evaluation. Therefore, all the conditions of use for TCE will be included in the risk evaluation.

Table 2-33 summarizes each life cycle stage and the corresponding categories and subcategories of conditions of use for TCE that EPA plans to evaluate in the risk evaluation. Using the 2016 CDR (U.S. EPA, 2016b), EPA identified industrial processing or use activities, industrial function categories and commercial and consumer use product categories. EPA identified the subcategories by supplementing CDR data with other published literature and information obtained through stakeholder consultations. For risk evaluations, EPA intends to consider each life cycle stage (and corresponding use categories

ED_004056A_00072837-00020

and subcategories) and assess certain potential sources of release and human exposure associated with that life cycle stage. In addition, activities related to distribution (e.g., loading, unloading) will be considered throughout the life cycle, rather than using a single distribution scenario.

Beyond the uses identified in the Scope of the Risk Evaluation for TCE, EPA has received no additional information identifying additional current conditions of use for TCE from public comment and stakeholder meetings.

Table 2-3. Categories and Subcategories of Conditions of Use Included in the Scope of the Risk Evaluation

Life Cycle Stage	Category [a]	Subcategory [b]	References
Manufacture	Domestic manufacture	Domestic manufacture	U.S. EPA (2016b)
	Import	Import	U.S. EPA (2016b)
Processing	Processing as a reactant/ intermediate	Intermediate in industrial gas manufacturing (e.g., manufacture of fluorinated gases used as refrigerants, foam blowing agents and solvents)	U.S. EPA (2016b); EPA-HQ-OPPT-2016-0737-0013; EPA-HQ-OPPT-2016-0737-0013; EPA-HQ-OPPT-2016-0737-0026; EPA-HQ-OPPT-2016-0737-0027
	Processing - Incorporation into formulation, mixture or reaction product	Solvents (for cleaning or degreasing)	U.S. EPA (2016b)
	Processing - Incorporation into formulation, mixture or reaction product	Adhesives and sealant chemicals	U.S. EPA (2016b)
		Solvents (which become part of product formulation or mixture) (e.g., lubricants and greases, paints and coatings, other uses)	U.S. EPA (2016b); EPA-HQ-OPPT-2016-0737-0003; EPA-HQ-OPPT-2016-0737-0056
	Processing – incorporated into articles	Solvents (becomes an integral components of articles)	U.S. EPA (2016b)
	Repackaging	Solvents (for cleaning or degreasing)	U.S. EPA (2016b)
	Recycling	Recycling	U.S. EPA (2017e)
Distribution in commerce	Distribution	Distribution	EPA-HQ-OPPT-2016-0737-0003

Life Cycle Stage	Category [a]	Subcategory [b]	References
Industrial/commercial/ consumer use	Solvents (for cleaning or degreasing)	Batch vapor degreaser (e.g., open-top, closed-loop) [c]	EPA-HQ-OPPT-2016-0737-0003, U.S. EPA (2014c), U.S. EPA (2016f), EPA-HQ-OPPT-2016-0737-0056
		In-line vapor degreaser (e.g., conveyorized, web cleaner) [c]	EPA-HQ-OPPT-2016-0737-0003, U.S. EPA (2014c), U.S. EPA (2016f), EPA-HQ-OPPT-2016-0737-0056
		Cold cleaner	EPA-HQ-OPPT-2016-0737-0003; U.S. EPA (2017f); EPA-HQ-OPPT-2016-0737-0056
	Solvents (for cleaning or degreasing)	Aerosol spray degreaser/cleaner [c]	EPA-HQ-OPPT-2016-0737-0003, U.S. EPA (2014c), U.S. EPA (2016d), U.S. EPA (2016c), EPA-HQ-OPPT-2016-0737-0056
		Mold release	EPA-HQ-OPPT-2016-0737-0003; EPA-HQ-OPPT-2016-0737-0056
	Lubricants and greases/lubricants and lubricant additives	Tap and die fluid	U.S. EPA (2016b); EPA-HQ-OPPT-2016-0737-0003; EPA-HQ-OPPT-2016-0737-0028, EPA-HQ-OPPT-2016-0737-0056
		Penetrating lubricant	U.S. EPA (2016b), EPA-HQ-OPPT-2016-0737-0056; EPA-HQ-OPPT-2016-0737-0003; EPA-HQ-OPPT-2016-0737-0028
	Adhesives and sealants	Solvent-based adhesives and sealants	U.S. EPA (2016b), EPA-HQ-OPPT-2016-0737-0056; EPA-HQ-OPPT-2016-0737-0003
		Tire repair cement/sealer	U.S. EPA (2016b), EPA-HQ-OPPT-2016-0737-0056; EPA-HQ-OPPT-2016-0737-0003

Life Cycle Stage	Category [a]	Subcategory [b]	References
	Adhesives and sealants	Mirror edge sealant	EPA-HQ-OPPT-2016-0737-0003; U.S. EPA (2014c), EPA-HQ-OPPT-2016-0737-0056
	Functional fluids (closed systems)	Heat exchange fluid	U.S. EPA (2017f)
	Paints and coatings [d]	Diluent in solvent-based paints and coatings	U.S. EPA (2016b), EPA-HQ-OPPT-2016-0737-0056; EPA-HQ-OPPT-2016-0737-0003; EPA-HQ-OPPT-2016-0737-0010; EPA-HQ-OPPT-2016-0737-0015; EPA-HQ-OPPT-2016-0737-0027
	Cleaning and furniture care products	Carpet cleaner	EPA-HQ-OPPT-2016-0737-0056; EPA-HQ-OPPT-2016-0737-0003
		Cleaning wipes	EPA-HQ-OPPT-2016-0737-0056; EPA-HQ-OPPT-2016-0737-0003
	Laundry and dishwashing products	Spot remover [c]	EPA-HQ-OPPT-2016-0737-0003, U.S. EPA (2014c), U.S. EPA (2016e), EPA-HQ-OPPT-2016-0737-0056
	Arts, crafts and hobby materials	Fixatives and finishing spray coatings [c]	U.S. EPA (2014c)
	Corrosion inhibitors and anti-scaling agents	Corrosion inhibitors and anti-scaling agents	U.S. EPA (2016b)
	Processing aids	Process solvent used in battery manufacture	U.S. EPA (2017f)
		Process solvent used in polymer fiber spinning, fluoroelastomer manufacture and Alcantara manufacture	U.S. EPA (2017f)
		Extraction solvent used in caprolactam manufacture	U.S. EPA (2017f)
		Precipitant used in beta-cyclodextrin manufacture	U.S. EPA (2017f)

Life Cycle Stage	Category [a]	Subcategory [b]	References
	Ink, toner and colorant products	Toner aid	EPA-HQ-OPPT-2016-0737-0056; EPA-HQ-OPPT-2016-0737-0003
	Automotive care products	Brake and parts cleaner	EPA-HQ-OPPT-2016-0737-0056; EPA-HQ-OPPT-2016-0737-0003
	Apparel and footwear care products	Shoe polish	U.S. EPA (2017f)
	Other uses	Hoof polishes	EPA-HQ-OPPT-2016-0737-0056; EPA-HQ-OPPT-2016-0737-0003
		Pepper spray	EPA-HQ-OPPT-2016-0737-0056; EPA-HQ-OPPT-2016-0737-0003
		Lace wig and hair extension glues	EPA-HQ-OPPT-2016-0737-0056; EPA-HQ-OPPT-2016-0737-0003
		Gun scrubber	EPA-HQ-OPPT-2016-0737-0056; EPA-HQ-OPPT-2016-0737-0003
		Other miscellaneous industrial, commercial and consumer uses	U.S. EPA (2017f)
Disposal	Disposal	Industrial pre-treatment	U.S. EPA (2017e)
		Industrial wastewater treatment	
		Publicly owned treatment works (POTW)	

[a] These categories of conditions of use appear in the Life Cycle Diagram, reflect CDR codes, and broadly represent conditions of use of TCE in industrial and/or commercial settings.
[b] These subcategories reflect more specific uses of TCE.
[c] This includes uses assessed in the U.S. EPA, 2014c risk assessment.
[d] Paints and coatings only applies to industrial and commercial uses and not consumer uses.

Although EPA indicated in the TCE scope document that EPA did not expect to evaluate the uses assessed in the 2014 risk assessment in the TCE risk evaluation, EPA has decided to evaluate these conditions of use in the risk evaluation as described in this problem formulation. EPA is including these conditions of use so that they are part of EPA's determination of whether TCE presents an unreasonable risk "under the conditions of use," TSCA 6(b)(4)(A). EPA has concluded that the Agency's assessment of the potential risks from this widely used chemical will be more robust if the potential risks from these conditions of use are evaluated by applying standards and guidance under amended TSCA. In particular, this includes ensuring the evaluation is consistent with the scientific standards in Section 26 of TSCA,

ED_004056A_00072837-00024

the *Procedures for Chemical Risk Evaluation under the Amended Toxic Substances Control Act* (40 CFR Part 702) and EPA's supplemental document, *Application of Systematic Review in TSCA Risk Evaluations* (U.S. EPA, 2018) EPA also expects to consider other available hazard and exposure data to ensure that all reasonably available information is taken into consideration. It is important to note that conducting these evaluations does not preclude EPA from finalizing the proposed TCE regulation (82 FR 7432; January 19, 2017; 81 FR 91592; December 16, 2016).

2.2.2.3 Overview of Conditions of Use and Lifecycle Diagram

The life cycle diagram provided in Figure 2-1 depicts the conditions of use for TCE that are considered within the scope of the risk evaluation during various life cycle stages including manufacturing, processing, distribution, use (industrial, commercial, consumer; when distinguishable), and disposal. The activities that EPA determined are out of scope during problem formulation are not included in the life cycle diagram. The information is grouped according to Chemical Data Reporting (CDR) processing codes and use categories (including functional use codes for industrial uses and product categories for industrial, commercial and consumer uses), in combination with other data sources (e.g., published literature and consultation with stakeholders), to provide an overview of conditions of use. EPA notes that some subcategories of use may be grouped under multiple CDR categories.

Use categories include the following: "industrial use" means use at a site at which one or more chemicals or mixtures are manufactured (including imported) or processed. "Commercial use" means the use of a chemical or a mixture containing a chemical (including as part of an article) in a commercial enterprise providing saleable goods or services. "Consumer use" means the use of a chemical or a mixture containing a chemical (including as part of an article, such as furniture or clothing) when sold to or made available to consumers for their use (U.S. EPA, 2016b).

Descriptions of the industrial, commercial and consumer use categories identified from the 2016 CDR and included in the life cycle diagram are summarized below (U.S. EPA, 2016b). The descriptions provide a brief overview of the use category; Appendix B contains more detailed descriptions (e.g. process descriptions, worker activities, process flow diagrams, equipment illustrations) for each manufacture, processing, distribution, use and disposal category. The descriptions provided below are primarily based on the corresponding industrial function category and/or commercial and consumer product category descriptions from the 2016 CDR and can be found in EPA's Instructions for Reporting 2016 TSCA Chemical Data Reporting (U.S. EPA, 2016b).

The **"Solvents for Cleaning and Degreasing"** category encompasses chemical substances used to dissolve oils, greases and similar materials from a variety of substrates including metal surfaces, glassware and textiles. This category includes the use of TCE in vapor degreasing, cold cleaning and in industrial and commercial aerosol degreasing products.

The **"Lubricants and Greases"** category encompasses chemical substances contained in products used to reduce friction, heat generation and wear between solid surfaces. This category includes the use of TCE in penetrating lubricants, and tap and die fluids for industrial, commercial and consumer uses.

The **"Adhesives and Sealants"** category encompasses chemical substances contained in adhesive and sealant products used to fasten other materials together. This category includes the use of TCE in mirror-edge sealants, lace wig and hair extension glues and other adhesive products.

ED_004056A_00072837-00025

The "**Functional Fluids (closed system)**" category encompasses liquid or gaseous chemical substances used for one or more operational properties in a closed system. Examples are heat transfer agents (e.g., coolants and refrigerants).

The **"Paints and Coatings"** category encompasses chemical substances contained in paints, lacquers, varnishes and other coating products that are applied as a thin continuous layer to a surface. Coating may provide protection to surfaces from a variety of effects such as corrosion and ultraviolet (UV) degradation; may be purely decorative; or may provide other functions. EPA anticipates that the primary subcategory to be the use of TCE in solvent-based coatings. EPA no longer believes that paints and coatings for consumer use contain TCE, as evidenced by the SNUR on TCE in Certain Consumer Products SNUR (81 FR 20535). Therefore, EPA is only including paints and coatings from industrial and commercial uses as a condition of use for TCE.

The **"Cleaning and Furniture Care Products"** category encompasses chemical substances contained in products that are used to remove dirt, grease, stains and foreign matter from furniture and furnishings, or to cleanse, sanitize, bleach, scour, polish, protect or improve the appearance of surfaces. This category includes the use of TCE for spot cleaning and carpet cleaning.

The **"Laundry and Dishwashing Products"** category encompasses chemical substances contained in laundry and dishwashing products and aids formulated as a liquid, granular, powder, gel, cakes, and flakes that are intended for consumer or commercial use.

The **"Arts, Crafts and Hobby Materials"** category encompasses chemical substances contained in arts, crafts, and hobby materials that are intended for consumer or commercial use.

To understand conditions of use relative to one another and associated potential exposures under those conditions of use, the life cycle diagram includes the production volume associated with each stage of the life cycle, as reported in the 2016 CDR reporting (U.S. EPA, 2016b) when the volume was not claimed confidential business information (CBI).

The 2016 CDR reporting data for TCE are provided in Table 2-4 for TCE from EPA's CDR database (U.S. EPA, 2016b). For the 2016 CDR period, non-confidential data indicate a total of 13 manufacturers and importers of TCE in the United States. This information has not changed during problem formulation from that provided in the scope document.

Table 2-4. Production Volume of TCE in CDR Reporting Period (2012 to 2015) [a]

Reporting Year	2012	2013	2014	2015
Total Aggregate Production Volume (lbs)	220,536,812	198,987,532	191,996,578	171,929,400

[a] The CDR data for the 2016 reporting period is available via ChemView (https://java.epa.gov/chemview). Because of an ongoing CBI substantiation process required by amended TSCA, the CDR data available in the scope document (Scope Document) is more specific than currently in ChemView.

As seen in Figure 2-1, most information on the production volume associated with the various uses is shown as "Volume CBI" in the life cycle diagram, based on CBI claims in the 2016 CDR (U.S. EPA, 2016b). The production volumes shown are for reporting year 2015 from the 2016 CDR reporting period. As reported in the Use Document [EPA-HQ-OPPT-2016-0737-0003 (U.S. EPA, 2017c)], as well as in the 2014 TCE risk assessment (U.S. EPA, 2014c), an estimated 83.6% of TCE's annual production

ED_004056A_00072837-00026

volume is used as an intermediate in the manufacture of the hydrofluorocarbon, HFC-134a, an alternative to the refrigerant chlorofluorocarbon, CFC-12. Another 14.7% of TCE production volume is used as a degreasing solvent, leaving approximately 1.7% for other uses. Also reflected in the life cycle diagram is the fact that TCE, as a widely used solvent, has numerous applications across industrial, commercial and consumer settings.

Figure 2-1 depicts the life cycle diagram of trichloroethylene from manufacture to the point of disposal. Activities related to the distribution (e.g., loading, unloading) will be considered throughout the TCE life cycle rather, than using a single distribution scenario.

ED_004056A_00072837-00027

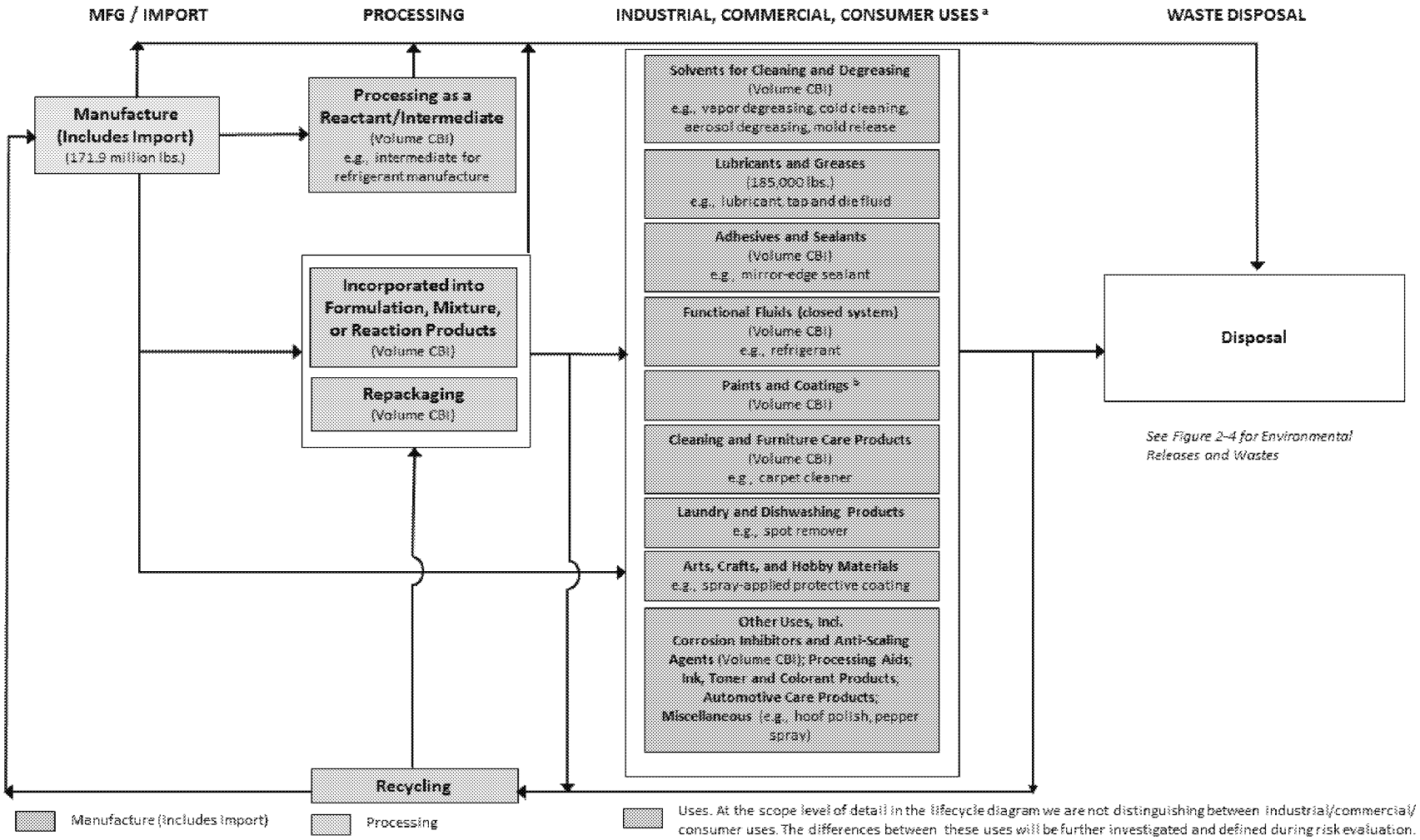

Figure 2-1. TCE Life Cycle Diagram

The life cycle diagram depicts the conditions of use that are within the scope of the risk evaluation during various life cycle stages including manufacturing, processing, use (industrial, commercial, consumer), distribution and disposal. The production volumes shown are for reporting year 2015 from the 2016 CDR reporting period (U.S. EPA, 2016b). Activities related to distribution (e.g., loading and unloading) will be considered throughout the TCE life cycle, rather than using a single distribution scenario.

[a] See Table 2-3 for additional uses not mentioned specifically in this diagram.

[b] Paints and coatings only applies to industrial and commercial uses and not consumer uses.

ED_004056A_00072837-00028

2.3 Exposures

For TSCA exposure assessments, EPA expects to evaluate exposures and releases to the environment resulting from the conditions of use applicable to TCE. Post-release pathways and routes will be described to characterize the relationship or connection between the conditions of use for TCE and the exposure to human receptors, including potentially exposed or susceptible subpopulations and ecological receptors. EPA will take into account, where relevant, the duration, intensity (concentration), frequency and number of exposures in characterizing exposures to TCE.

2.3.1 Fate and Transport

Environmental fate includes both transport and transformation processes. Environmental transport is the movement of the chemical within and between environmental media. Transformation occurs through the degradation or reaction of the chemical with other species in the environment. Hence, knowledge of the environmental fate of the chemical informs the determination of the specific exposure pathways and potential human and environmental receptors EPA expects to consider in the risk evaluation. Table 2-5 provides environmental fate data that EPA identified and considered in developing the scope for TCE. This information has not changed from that provided in the scope document.

Fate data, including volatilization during wastewater treatment, volatilization from lakes and rivers, biodegradation rates, and organic carbon:water partition coefficient (log K_{OC}) and bioaccumulation potential were used when considering changes to the conceptual models. Model results and basic principles were used to support the fate data in problem formulation while literature review is currently underway through the systematic review process.

The Estimation Program Interface Suite™ (EPI Suite™) (U.S. EPA, 2012a) modules were used to predict volatilization of TCE from wastewater treatment plants, lakes, and rivers and to confirm the data showing slow biodegradation. The EPI Suite™ module that estimates chemical removal in sewage treatment plants ("STP" module) was run using default settings (set biodegradation half-life to 10,000 hours) to evaluate the potential for TCE to volatilize to air or adsorb to sludge during wastewater treatment. The STP module estimates that 74% of TCE in wastewater will be removed by volatilization while 1% of TCE will be removed by adsorption.

The EPI Suite™ module that estimates volatilization from lakes and rivers ("Volatilization" module) was run using default settings to evaluate the volatilization half-life of TCE in surface water. The volatilization module estimates that the half-life of TCE in a model river will be 1.2 hours and the half-life in a model lake will be 110 hours.

The EPI Suite™ module that predicts biodegradation rates ("BIOWIN" module) was run using default settings to estimate biodegradation rates of TCE in soil and sediment. Three of the models built into the BIOWIN module (BIOWIN 1, 2, and 5) estimate that TCE will not rapidly biodegrade in aerobic environments, while a fourth (BIOWIN 6) estimates that TCE will rapidly biodegrade in aerobic environments. These results support the biodegradation data presented in the TCE scope document, which demonstrate slow biodegradation under aerobic conditions. The model that estimates anaerobic biodegradation (BIOWIN 7) predicts that TCE will biodegrade under anaerobic conditions. Further, previous assessments of TCE found that biodegradation was slow or negligible.

The log K_{OC} reported in the TCE scoping document was predicted using EPI Suite™ as 1.8 and extracted from measured values which ranged from 1.86 to 2.17 with different soils. That range of values (1.8-2.17) is supported by the basic principles of environmental chemistry which states that the

ED_004056A_00072837-00029

K_{OC} is typically within one order of magnitude (one log unit) of the octanol:water partition coefficient (K_{OW}). The log K_{OC} values reported in previous assessments of TCE were in the range of 1.8-2.17, suggesting low sorption to soil and sediment and is mobile in soil and sediment.

Table 2-5. Environmental Fate Characteristic of TCE

Property or Endpoint	Value [a]	References
Indirect photodegradation	5.5-8 days (atmospheric degradation based on measured hydroxyl radical degradation) 1-11 days (atmospheric degradation based on measured hydroxyl radical degradation)	ECB (2004), U.S. EPA (2014c)
Hydrolysis half-life	Does not undergo hydrolysis at pH 7	EC (2000)
Biodegradation	19% in 28 days (aerobic in water, OECD 301D) 2.4% in 14 days (aerobic in water, OECD 301C) 25% degradation after 10 days, 95% degradation after 30 days (anaerobic biodegradation in subsurface sediment with methanol) 65% degradation after 10 days, 99% degradation after 30 days (anaerobic biodegradation in subsurface sediment with glucose) TCE removed slowly with a reduction of 40% after 8 weeks (TCE (200 µg/L) incubated with batch bacterial cultures under methanogenic conditions)	ECB (2004)
Bioconcentration factor (BCF)	4-17 (carp)	U.S. EPA (2014c)
Bioaccumulation factor (BAF)	23.7 (estimated)	U.S. EPA (2014c)
Organic carbon:water partition coefficient (Log K_{oc})	2.17 (measured in silty clay Nebraska loam); 1.94 (measured in silty clay Nevada loam); 1.86 (measured in a forest soil) 1.8 (estimated)	U.S. EPA (2014c)
[a] Measured unless otherwise noted		

If released to the air, TCE does not absorb radiation well at wavelengths that are present in the lower atmosphere (>290 nm) so direct photolysis is not a main degradation process. Degradation by reactants in the atmosphere has a half-life of several days meaning that long range transport is possible.

If released to water, sediment or soil, the fate of TCE is influenced by volatilization from the water surface or from moist soil as indicated by its physical chemical properties (e.g. Henry's law constant)

and by microbial biodegradation under some conditions. The biodegradation of TCE in the environment is dependent on a variety of factors and thus, a wide range of degradation rates have been reported (ranging from days to years). TCE is not expected to accumulate in aquatic organisms due to low measured BCFs and estimated BAF.

2.3.2 Releases to the Environment

Releases to the environment from conditions of use (e.g., industrial and commercial processes, commercial or consumer uses resulting in down-the-drain releases) are one component of potential exposure and may be derived from reported data that are obtained through direct measurement, calculations based on empirical data and/or assumptions and models.

A source of information that EPA expects to consider in evaluating exposure are data reported under the Toxics Release Inventory (TRI) program. Under the Emergency Planning and Community Right-to-Know Act (EPCRA) Section 313 rule, TCE is a TRI-reportable substance effective January 1, 1987. During problem formulation EPA further analyzed the TRI data and examined the definitions of elements in the TRI data to determine the level of confidence that a release would result from certain types of disposal to land (e.g. Resource Conservation and Recovery Act (RCRA) Subtitle C hazardous landfill and Class I underground Injection wells) and incineration. EPA also examined how trichloroethylene is treated at industrial facilities.

Table 2-66 provides production-related waste managed data (also referred to as waste managed) for TCE reported by industrial facilities to the TRI program for 2015. Table 2-7 provides more detailed information on the quantities released to air or water or disposed of on land. Release quantities in Table 2-7 are more representative of actual releases during the year. Production-related waste managed shown in Table 2-6 excludes any quantities reported as catastrophic or one-time releases (TRI section 8 data), while release quantities shown in Table 2-7 include both production-related and non-routine quantities (TRI section 5 and 6 data).

Table 2-6. Summary of TCE TRI Production-Related Waste Managed in 2015 (lbs)

Number of Facilities	Recycling	Energy Recovery	Treatment	Releases [a, b, c]	Total Production Related Waste
172	76,090,421	2,585,262	10,540,042	1,967,576	91,183,301

Data source: 2015 TRI Data (updated March 2017).
[a] Terminology used in these columns may not match the more detailed data element names used in the TRI public data and analysis access points.
[b] Does not include releases due to one-time event not associated with production such as remedial actions or earthquakes.
[c] Counts all releases including release quantities transferred and release quantities disposed of by a receiving facility reporting to TRI.

Table 2-7. Summary of TCE TRI Releases to the Environment in 2015 (lbs)

		Air Releases			Land Disposal				
	Number of Facilities	Stack Air Releases	Fugitive Air Releases	Water Releases	Class I Under-ground Injection	RCRA Subtitle C Landfills	All other Land Disposal [a]	Other Releases [a]	Total On- and Off-site Disposal or Other Releases [b, c]
Subtotal	172	689,627	1,190,942	52	122	49,500	405	36,890	1,967,538

	Number of Facilities	Air Releases		Water Releases	Land Disposal			Other Releases [a]	Total On- and Off-site Disposal or Other Releases [b, c]
		Stack Air Releases	Fugitive Air Releases		Class I Under-ground Injection	RCRA Subtitle C Landfills	All other Land Disposal [a]		
Totals		1,880,569			50,027				

Data source: 2015 TRI Data (updated March 2017).
[a] Terminology used in these columns may not match the more detailed data element names used in the TRI public data and analysis access points.
[b] These release quantities do include releases due to one-time events not associated with production such as remedial actions or earthquakes.
[c] Counts release quantities once at final disposition, accounting for transfers to other TRI reporting facilities that ultimately dispose of the chemical waste.

Facilities are required to report if they manufacture (including import) or process more than 25,000 pounds of TCE, or if they otherwise use more than 10,000 pounds of TCE. In 2015, 172 facilities reported a total of 91 million pounds of TCE waste managed. Of this total, 76 million pounds were recycled, 2.5 million pounds were recovered for energy, 10.5 million pounds were treated, and nearly 2 million pounds were released into the environment (Table 2-6).

Of the nearly 2 million pounds of total disposal or other releases, there were stack and fugitive air releases, water releases, Class I underground injection, releases to Resource Conservation and Recovery Act (RCRA) Subtitle C landfills and other land disposal, and other releases. Of these releases, 96% were released to air. For stack releases, multiple types of facilities report on incineration destruction, including hazardous waste facilities and facilities that perform other industrial activities and may be privately or publicly (i.e., federal, state, or municipality) owned or operated. Approximately 690,000 pounds of TCE releases were reported to TRI as on-site stack releases, and account for any incineration destruction. Stack releases reported to TRI represent the total amount of TCE being released to the air at the facility from stacks, confined vents, ducts, pipes, or other confined air streams.

In 2015, 1,928,867 pounds of TCE were disposed of or otherwise released on-site, and 38,671 pounds were disposed of or otherwise released off-site. Of the on-site releases, 97.496% (1,880,569 pounds) were released to air, including both stack and fugitive releases, 2.501% (48,245 pounds) went to land disposal, and 0.003% (52 pounds) were released to water. Of the on-site land disposal, nearly all went to RCRA Subtitle C landfills. Just 3 pounds went to on-site landfills other than RCRA Subtitle C, and none was disposed of in on-site underground injection wells, on-site land treatment, or on-site surface impoundments. Of the off-site releases, 46.1% (17,815 pounds) was transferred for other off-site management, 31.3% (12,105 pounds) was transferred to a waste broker for disposal, 16.1% (6,246 pounds) was transferred for storage only, 3.3% (1,263 pounds) was transferred to a RCRA Subtitle C landfill, 1% (397 pounds) was transferred to a non-RCRA Subtitle C landfill, 1.9% (722 pounds) was transferred for unknown disposal, and 0.3% (122 pounds) was transferred to an off-site underground injection Class I well.

While most TCE going to land disposal went to Subtitle C Hazardous Waste Landfills in 2015, in past years, the TRI data show TCE going to other types of land disposal as well. In 2014, 12,600 pounds was transferred for off-site land treatment, and in both 2013 and 2014 over 11,000 pounds were transferred to off-site landfills other than RCRA subtitle C landfills. From 2012 through 2014, 24,000 pounds to over 100,000 pounds of TCE were released on-site to other land disposal. That volume decreased to only 5 pounds in 2015.

While the volume of production-related waste managed shown in Table 2-6 excludes any quantities reported as catastrophic or one-time releases (TRI section 8 data), release quantities shown in Table 2-7 includes both production-related and non-routine quantities (TRI section 5 and 6 data). As a result, release quantities may differ slightly and may reflect differences in TRI calculation methods for reported release range estimates (U.S. EPA, 2017e). In addition, Table 2-6 counts all release quantities reported to TRI, while Table 2-7 counts releases once at final disposition, accounting for transfers of chemical waste from one TRI reporting facility and received by another TRI reporting facility for final disposition. As a result, release quantities may differ slightly and may further reflect differences in TRI calculation methods for reported release range estimates (U.S. EPA, 2017e).

Other sources of information provide evidence of releases of TCE, including EPA effluent guidelines (EGs) promulgated under the Clean Water Act (CWA), National Emission Standards for Hazardous Air Pollutants (NESHAPs) promulgated under the Clean Air Act (CAA), or other EPA standards and regulations that set legal limits on the amount of TCE that can be emitted to a particular media. There are additional sources of TCE emissions data, including National Emissions Inventory (NEI) (U.S. EPA, 2017h) and the Discharge Monitoring Report (DMR) Pollutant Loading Tool (U.S. EPA, 2010), which provide additional release data specific to air and surface water, respectively. NEI provides comprehensive and detailed estimates of air emissions for criteria pollutants, criteria precursors, Hazardous Air Pollutants (HAPs) on a 3-year cycle. Another source is EPA's AP-42, *Compilation of Air Pollutant Emission Factors*. AP-42 sections provide general process and emission information for a variety of industry sectors. AP-42 sections relevant to the conditions of use of TCE include: 4.2 on surface coating, 4.6 on solvent degreasing, 4.7 on waste solvent reclamation, 4.8 on tanks and drum cleaning, 4.10 on commercial/consumer solvent use, and 6.7 on printing inks. The DMR loading tool calculates pollutant loadings from permit and DMR data from EPA's Integrated Compliance Information System for the National Pollutant Discharge Elimination System (ICIS-NPDES). EPA expects to consider these data in conducting the exposure assessment component of the risk evaluation for TCE.

2.3.3 Presence in the Environment and Biota

Monitoring studies or a collection of relevant and reliable monitoring studies provide(s) information that can be used in an exposure assessment. Monitoring studies that measure environmental concentrations or concentrations of chemical substances in biota provide evidence of exposure. Monitoring and biomonitoring data were identified in EPA's data search for TCE.

Environment

TCE is widely detected in a number of environmental media. While the primary fate of TCE released to surface waters or surface soils is volatilization, TCE is more persistent in air and ground water, where it is commonly detected through national and state-level monitoring efforts. TCE is frequently found at Superfund sites as a contaminant in soil and ground water.

TCE has been detected in ambient air across the United States, though ambient levels vary by location and proximity to industrial activities. EPA's Air Quality System (AQS) is EPA's repository of Criteria Pollutant and Hazardous Air Pollutant (HAP) monitoring data. A summary of the ambient air monitoring data for TCE (i.e., measured data) in the United States from 1999 to 2006 suggests that TCE levels in ambient air have remained fairly constant in ambient air for the United States since 1999, with an approximate mean value of 0.23 $\mu g/m^3$ (U.S. EPA, 2011c, 2007). EPA also compiles modeled air concentrations in its National-scale Air Toxics Assessments (NATA) using NEI data for the Criteria Pollutants and HAPs, like TCE. Recent ambient air concentration data from both sources, as well as those identified in open literature, will be reviewed and considered for risk evaluation.

ED_004056A_00072837-00033

The presence of TCE in indoor air may result from ambient air releases from industrial and commercial activities, volatilization from tap water and household uses of TCE-containing consumer products. Additionally, TCE in ground water may volatilize through soil and into indoor environments of overlying buildings in a process called vapor intrusion. There are a number of studies that have reported indoor air levels of TCE in residences, schools and stores, and recent indoor air data from open literature, agency databases (e.g., EPA's Vapor Intrusion Database) and other authoritative documents addressing vapor intrusion.

TCE is one of the most frequently detected organic solvents in U.S. ground water. The U.S. Geological Survey (USGS) conducted a national assessment of VOCs in ground water, including TCE. Between 1985 and 2001, the detection frequency of TCE was 2.6%, with a median concentration of 0.15 $\mu g/m^3$ (U.S. EPA, 2011c; Zogorski et al., 2006). Recent sources of national and state-level (U.S. EPA, 2011c) groundwater monitoring data will be reviewed and considered for risk evaluation.

TCE has been detected in drinking water systems through national and state-wide monitoring efforts. EPA's second and third Six-Year Review (Six-Year Review 2 and 3) contains a compilation of state drinking water monitoring data from 1998-2005 and 2006-2011, which are available through EPA's Six-Year Review 2 Contaminant Occurrence Data site and EPA's Six-Year Review 3 Contaminant Occurrence Data site. These sources, as well as additional drinking water monitoring data from states and/or the open literature, will be used to inform the magnitude and extent of TCE's presence in drinking water.

EPA's STOrage and RETrieval (STORET) is an electronic data system for water quality monitoring data. Based on a recent search of STORET surface water monitoring data covering the past ten years, there are detections with a maximum of 50 ppb and average of 4.5 ppb. Data from other sources will also be reviewed for a better understanding of current levels of TCE in surface water. EPA's STORET database will also be examined for recent data on TCE levels in sediment.

Compared with other environmental media, there is a relative lack of nationally representative monitoring data on levels of TCE in ambient soil.

Biota

Biological studies have detected TCE in human blood and urine in the United States and several other countries, with those exposed through occupational degreasing activities reporting the highest frequency of positive detections (U.S. EPA, 2011c; IARC, 1995). The Third National Health and Nutrition Examination Survey (NHANES III) analyzed blood concentrations of TCE in non-occupationally exposed individuals in the United States and found that 10% of those sampled had TCE levels in whole blood at or above the detection limit of 0.01 ppb (U.S. EPA, 2011c).

2.3.4 Environmental Exposures

The manufacturing, processing, use and disposal of TCE can result in releases to the environment. In this section, EPA presents exposures to aquatic and terrestrial organisms.

Aquatic Environmental Exposures

TCE is released to surface water from ongoing industrial and/or commercial activities, as reported in recent TRI and DMR release and loading data. TRI reporting from 2015 indicates direct releases to surface water of 52 pounds/ year. In 2016, the top ten DMR dischargers reported site-specific loadings to surface water of 17.5 to 1,564 lbs/yr. Within the past ten years of surface water monitoring data from

STORET, there are detections (e.g., maximum of 50 ppb and average of 4.5 ppb), that do not exceed the preliminary acute concentration of concern (COC) for TCE (acute COC = 340 ppb), but do exceed the preliminary chronic COC (chronic COC = 3 ppb).

Terrestrial Environmental Exposures
Exposure to terrestrial organisms is expected to be low since physical chemical properties do not support an exposure pathway through water and soil pathways to these organisms. The partition of TCE into sediments is very low. Furthermore, the primary fate of TCE released to surface waters or surface soils is volatilization.

2.3.5 Human Exposures

In this section, EPA presents occupational exposures, consumer exposures and general population exposures. Subpopulations, including potentially exposed and susceptible subpopulations within these exposure categories are also presented.

2.3.5.1 Occupational Exposures

Exposure pathways and exposure routes are listed below for worker activities under the various conditions of use described in Section 2.2. In addition, exposures to occupational non-users (ONU), who do not directly handle the chemical but perform work in an area where the chemical is present are listed. Engineering controls and/or personal protective equipment may affect the occupational exposure levels.

In the previous 2014 risk assessment (U.S. EPA, 2014c), EPA assessed inhalation exposures to TCE for occupational use in vapor degreasing, aerosol degreasing, and spot cleaning in dry cleaning facilities, which will be considered in the TCE risk evaluation. Based on information identified during scoping, as described in Section 2.3, additional conditions of use resulting in occupational exposure will be considered during the risk evaluation.

Worker Activities
Workers and occupational non-users may be exposed to TCE when performing activities associated with the conditions of use described in Section 2.2, including but not limited to:

- Unloading and transferring TCE to and from storage containers to process vessels;
- Cleaning and maintaining equipment;
- Sampling chemicals, formulations or products containing TCE for quality control;
- Repackaging chemicals, formulations or products containing TCE;
- Using TCE in process equipment (e.g., vapor degreasing machine);
- Applying formulations and products containing TCE onto substrates (e.g., spray applying coatings or adhesives containing TCE);
- Handling, transporting and disposing waste containing TCE; and
- Performing other work activities in or near areas where TCE is used.

Inhalation
Based on these occupational exposure scenarios, inhalation exposure to vapor is expected. EPA anticipates this is the most important TCE exposure pathway for workers and occupational non-users based on high volatility. Based on the potential for spray application of some products containing TCE exposures to mists are also expected for workers and ONU and will be incorporated into the worker inhalation exposure.

The United States has several regulatory and non-regulatory exposure limits for trichloroethylene: an Occupational Safety and Health Administration (OSHA) permissible exposure limit (PEL) of 100 ppm

ED_004056A_00072837-00035

8-hour time-weighted average (TWA), an acceptable ceiling concentration of 200 ppm provided the 8-hour PEL is not exceeded, and an acceptable maximum peak of 300 ppm for a maximum duration of 5 minutes in any 2 hours (OSHA, 1997), and an American Conference of Government Industrial Hygienists (ACGIH) Threshold Limit Value (TLV) of 10ppm 8-hour TWA and a short-term exposure level (STEL) of 25ppm (ACGIH, 2010). (ACGIH, 2010)The National Institute for Occupational Safety and Health (NIOSH) has classified trichloroethylene as a potential occupational carcinogen and established an immediately dangerous to life or health (IDLH) value of 1,000 ppm. NIOSH has a recommended exposure limit of 2 ppm (as a 60-minute ceiling) during the usage of TCE as an anesthetic agent and 25 ppm (as a 10-hour TWA) during all other exposures (NIOSH, 2016).

Dermal
Based on the conditions of use EPA expects dermal exposures for workers, who are expected to have skin contact with liquids and vapors. Occupational non-users are not directly handling TCE; therefore, skin contact with liquid TCE is not expected for occupational non-users but skin contact with vapors is expected for occupational non-users.

Oral
Worker exposure via the oral route is not expected. Exposure may occur through mists that deposit in the upper respiratory tract however, based on physical chemical properties, mists of TCE will likely be rapidly absorbed in the respiratory tract and will be considered as an inhalation exposure.

Key Data
Key data that inform occupational exposure assessment include: OSHA Integrated Management Information System (IMIS) and NIOSH Health Hazard Evaluation (HHE) program data. OSHA data are workplace monitoring data from OSHA inspections. The inspections can be random or targeted, or can be the result of a worker complaint. OSHA data can be obtained through the OSHA Chemical Exposure Health Data (CEHD) at https://www.osha.gov/oshstats/ index.html. Table_Apx B-1 provides a mapping of scenarios to industry sectors with trichloroethylene personal monitoring air samples obtained from OSHA inspections conducted between 2003 and 2017.

NIOSH HHEs are conducted at the request of employees, union officials, or employers and help inform potential hazards at the workplace. HHEs can be downloaded at https://www.cdc.gov/niosh/hhe/. Table_Apx B-2 provides a summary of personal and area monitoring air samples obtained from NIOSH HHEs occurring after 1990.

2.3.5.2 Consumer Exposures

TCE can be found in consumer products and commercial products that are readily available for public purchase at common retailers [EPA-HQ-OPPT-2016-0737-003, Sections 3 and 4, (U.S. EPA, 2017c)] and can therefore result in exposures to consumers/product users (i.e., receptors who use a product directly) and bystanders (i.e., receptors who are a non-product users that are incidentally exposed to the product or article) (U.S. EPA, 2017b).

Inhalation
EPA expects that exposure via inhalation will be the most significant route of exposure for consumer exposure scenarios, including those involving users and bystanders. This assumption is in line with EPA/OPPT's 2014 inhalation risk assessment of TCE, which evaluated inhalation exposure to consumers and bystanders from degreasing and arts & crafts uses.

Dermal
There is potential for dermal exposures to TCE from consumer uses. Exposures to skin that are instantaneous would be expected to evaporate before significant dermal absorption could occur based on the physical chemical properties including the vapor pressure, water solubility and log Kow (the estimate from IHSkinPerm, a mathematical tool for estimating dermal absorption, is 0.8% absorption and 99.2% volatilization). Exposure that occurs as a deposition over time or a repeated exposure that maintains a thin layer of liquid TCE would have greater absorption (the estimate from IHSkinPerm for an 8-hr exposure is 1.6% absorption and 98.4% volatilization). Furthermore, dermal exposures to liquid TCE are expected to be concurrent with inhalation exposures, which reflect the preponderance of overall exposure from a particular use or activity for most consumer exposure scenarios. This is in agreement with the NIOSH skin notation profile for TCE, which estimates a low hazard potential by dermal absorption for systemic effects when inhalation and dermal exposures are concurrent (NIOSH, 2017). There may also be certain scenarios with a higher dermal exposure potential, for example, an occluded scenario where liquid TCE is not able to evaporate readily such as a user holding a rag soaked with liquid TCE against their palm during a cleaning activity.

Generally, individuals that have contact with liquid TCE would be users and not bystanders. Therefore, dermal exposures to liquid TCE are not expected and inhalation is the primary route of exposure for bystanders. There is potential for bystanders or users to have indirect dermal contact via contact with a surface upon which TCE has been applied (e.g., counter, floor). Based on the expectation that TCE would evaporate from the surface rapidly, with <1% dermal absorption predicted from instantaneous contact, this route is unlikely to contribute significantly to overall exposure.

Oral
Oral exposure to TCE may occur through incidental ingestion of TCE mists that deposit in the upper respiratory tract. EPA initially assumed that mists may be swallowed. However, based on physical chemical properties, mists of TCE are expected to be rapidly absorbed in the respiratory tract or evaporate upon being introduced into the respiratory tract, thus contributing to the amount of TCE vapor in the air available for inhalation exposure. Furthermore, based on available toxicological data, EPA does not expect inhalation and oral routes of exposure to differ significantly in the toxicity of trichloroethylene. Oral exposures may also occur through hand-to-mouth patterns following dermal contact with TCE. As described, dermal contact would not be expected for bystanders, and any TCE present on surfaces of the home or skin surfaces is expected to volatilize rapidly – making it available for inhalation as a vapor before oral ingestion may occur through such patterns.

Disposal
EPA does not expect exposure to consumers from disposal of consumer products. It is anticipated that most products will be disposed of in original containers, particularly those products that are purchased as aerosol cans. Liquid products may be recaptured in an alternate container following use (refrigerant flush or coin cleaning).

2.3.5.3 General Population Exposures
Wastewater/liquid wastes, solid wastes or air emissions of TCE could result in potential pathways for oral, dermal or inhalation exposure to the general population.

Inhalation
Based on TRI data and TCE physical-chemistry and fate properties, it is expected that inhalation represents the primary route of exposure for the general population from ongoing industrial and/or commercial activities. As noted in Section 2.3.3, Presence in the Environment and Biota, levels of TCE in ambient air vary based on proximity to industrial and commercial activities and urban environments

ED_004056A_00072837-00037

and there are a number of possible sources that may contribute to TCE levels in indoor air. Like other VOCs, TCE in drinking water can also contribute to general population inhalation exposures from volatilization from water during activities such as showering, bathing or washing (McKone and Knezovich, 1991)

Oral

The general population may ingest TCE via contaminated drinking water and other ingested media. It is anticipated that ingestion of drinking water containing TCE, for on-going TSCA uses, represents the primary route of oral exposure for this chemical. TCE has been detected in national-scale drinking water monitoring datasets (i.e., EPA's Six-Year Review 3) and is released to surface water from ongoing TSCA uses and activities. The primary oral exposure route for TCE is expected to be via drinking water. TCE's presence in drinking water may also contribute, to a lesser degree, to oral ingestion through showering or other non-drinking activities.

Dermal

General population dermal exposures are expected to primarily result from dermal contact with TCE-containing tap water during showering, bathing and/or washing. TCE has been detected in national-scale drinking water monitoring datasets (i.e., EPA's Six-Year Review 3) and is released to surface water from ongoing TSCA uses and activities. While instantaneous contact with TCE is expected to result primarily in inhalation exposures (see Section 2.3.5.2), activities such as bathing or showering involve longer durations, large surface area for exposure, and a different exposure medium (i.e., a more dilute solution).

2.3.5.4 Potentially Exposed or Susceptible Subpopulations

TSCA requires that the determination of whether a chemical substance presents an unreasonable risk to "a potentially exposed or susceptible subpopulation identified as relevant to the risk evaluation" by EPA. TSCA § 3(12) states that "the term 'potentially exposed or susceptible subpopulation' means a group of individuals within the general population identified by the Administrator who, due to either greater susceptibility or greater exposure, may be at greater risk than the general population of adverse health effects from exposure to a chemical substance or mixture, such as infants, children, pregnant women, workers, or the elderly." General population is "the total of individuals inhabiting an area or making up a whole group" and refers here to the U.S. general population (U.S. EPA, 2011a).

As part of the Problem Formulation, EPA identified potentially exposed and susceptible subpopulations during the development and refinement of the life cycle, conceptual models, the development of the exposure scenarios and the development of the analysis plan. In this section, EPA addresses the potentially exposed or subpopulations identified as relevant based on greater exposure. EPA will address the subpopulation identified as relevant based on greater susceptibility in the hazard section.

EPA identifies the following as potentially exposed or susceptible subpopulations due to their *greater exposure:*

- Workers and occupational non-users.
- Populations in buildings co-located with facilities using TCE.
- Consumers and bystanders associated with consumer use. TCE has been identified as being used in products available to consumers; however, only some individuals within the general population may use these products. Therefore, those who do use these products are a potentially exposed or susceptible subpopulation due to greater exposure.
- Other groups of individuals within the general population who may experience greater exposures due to their proximity to conditions of use that result in releases to the environment and

subsequent exposures (e.g., individuals who live or work near manufacturing, processing, use or disposal sites).

In developing exposure scenarios, EPA will analyze available data to ascertain whether some human receptor groups may be exposed via exposure pathways that may be distinct to a particular subpopulation or lifestage (e.g., children's crawling, mouthing or hand-to-mouth behaviors) and whether some human receptor groups may have higher exposure via identified pathways of exposure due to unique characteristics (e.g., activities, duration or location of exposure) when compared with the general population (U.S. EPA, 2006).

In summary, in the risk evaluation for TCE, EPA plans to analyze the following potentially exposed groups of human receptors: workers, occupational non-users, consumers, bystanders associated with consumer use and other groups within the general population who may experience greater exposure. EPA may also identify additional potentially exposed or susceptible subpopulations that will be considered based on greater exposure.

2.4 Hazards (Effects)

For scoping, EPA conducted comprehensive searches for data on hazards of TCE, as described in *Strategy for Conducting Literature Searches for Trichloroethylene (TCE): Supplemental Document to the TSCA Scope Document, CASRN: 79-01-6* (EPA-HQ-OPPT-2016-0737). Based on initial screening, EPA plans to analyze the hazards of TCE identified in the scope document. However, when conducting the risk evaluation, the relevance of each hazard within the context of a specific exposure scenario will be judged for appropriateness. For example, hazards that occur only as a result of chronic exposures may not be applicable for acute exposure scenarios. This means that it is unlikely that every hazard identified in the scope document will be considered for every exposure scenario.

2.4.1 Environmental Hazards

EPA identified the following sources of environmental hazard data for TCE: European Chemicals Agency (ECHA) Database (ECHA, 2017a), EPA Chemical Test Rule Data (U.S. EPA, 2017a), and Ecological Hazard Literature Search Results in *Trichloroethylene (CASRN 79-01-6) Bibliography: Supplemental File for the TSCA Scope Document* (EPA-HQ-OPPT-2016-0737; U.S. EPA, 2017g). Only the *on-topic* references listed in the Ecological Hazard Literature Search Results were considered as potentially relevant data/ information sources for the risk evaluation. Inclusion criteria were used to screen the results of the ECOTOX literature search (as explained in the *Strategy for Conducting Literature Searches for Trichloroethylene (TCE): Supplemental Document to the TSCA Scope Document, CASRN: 79-01-6*) (EPA-HQ-OPPT-2016-0737). Data from the screened literature are summarized below (Table 2-8) as ranges (min-max). EPA plans to review these data/information sources during risk evaluation using the data quality review evaluation metrics and the rating criteria described in the *Application of Systematic Review in TSCA Risk Evaluations* (U.S. EPA, 2018).

EPA also evaluated studies previously reviewed in the 2004 European Union (EU) environmental risk assessment on TCE (ECHA, 2004) and in the ECHA Database on TCE that supplements the 2004 EU environmental risk assessment.

The EPA TSCA 2014 TCE Risk Assessment (U.S. EPA, 2014c) did not analyze aquatic risk from TCE exposures due to low hazard for aquatic toxicity. The low hazard was based on moderate persistence, low bioaccumulation, and physical-chemical properties of TCE. The assessment concluded that the potential environmental impacts, i.e., risk, is expected to be low from environmental releases.

Additionally, TCE meets the criteria under Section 64 of the Canadian Environmental Protection Act (CEPA), 1999 and is therefore on the List of Toxic Substances (Schedule 1). Under Section 64 of CEPA, TCE is a substance that is determined to be toxic since it is entering or may enter the environment in a quantity or concentration or under conditions that have or may have an immediate or long-term harmful effect on the environment or its biological diversity. A risk assessment was completed by the Environment and Climate Change Canada (ECCC) under Schedule 1 concluded that TCE has the potential to cause harm to the environment (Environment Canada, 1993). Specifically, ECCC concluded that TCE is not expected to cause adverse effects to aquatic biota or terrestrial wildlife but may cause adverse effects to terrestrial plants from atmospheric concentrations of TCE.

Toxicity to Aquatic Organisms

Aquatic toxicity data were identified for fish, aquatic invertebrates, algae, and amphibians. Acute and chronic aquatic toxicity studies considered in this assessment are summarized in Table 2-8 (below). Fish acute 96-hour lethal concentration at which 50% of test organisms die (LC_{50}) values ranged from 1.9 mg/L to 66.8 mg/L. For aquatic invertebrates, the acute effect concentration at which 50% of test organisms exhibit an effect (EC_{50}) values ranged from 7.8 mg/L (a 48-hour EC_{50} in *Daphnia magna*) to 22 mg/L (a 24-hour EC_{50} in *Daphnia magna*). For aquatic plants, acute EC_{50} values range from 26.24 mg/L to 820 mg/L. For amphibians, acute 96-hour LC_{50} values range from 412.0 mg/L to 490.0 mg/L, and acute 96-hr EC_{50} values range from 22 mg/L to more than 85 mg/L. For planarian (*Dugesia japonica*), an LC_{50} of 1.7 mg/L was reported over 7 days.

For chronic fish toxicity, a no-observable-effect concentration (NOEC) of 10.568 mg/L and a lowest-observable-effect concentration (LOEC) of 20.915 mg/L were reported for mortality, resulting in a chronic value (ChV) for fish of 14.850 mg/L. For aquatic invertebrates, a NOEC of 7.1 mg/L and a LOEC of 12 mg/L was reported for reproduction, resulting in a ChV of 9.2 mg/L. For aquatic plants, a NOEC of 0.02 mg/L and a LOEC of 0.05 mg/L were reported for growth, resulting in a ChV of 0.03 mg/L.

As stated in Section 2.3.1, TCE is not expected to accumulate in aquatic organisms. The COCs calculated later in this section show an acute COC of 340 ppb and a chronic COC of 3 ppb. As stated in Section 2.3.4, surface water monitoring data show detection concentrations for TCE below the acute COC but above the chronic COC.

Toxicity to Terrestrial Organisms

Terrestrial toxicity data were identified for terrestrial invertebrates, plants, avian, fungi, and mammals (Table 2-8) (U.S. EPA, 2017g). For terrestrial invertebrates, an acute value was reported in earthworms (*Eisenia fetida*) with a 48-hour LC_{50} of 105 $\mu g/cm^2$. Acute toxicity was observed in terrestrial plants exposed through hydroponic root exposure at 118 mg/L for two weeks, and in terrestrial plants exposed through the air at 10.8 $\mu g/m^3$ for five hours. Another study reported an EC_{50} of greater than 1,000 mg/L for oat and turnip plants exposed to TCE through the soil for two weeks. Limited relevant data was available for avian and fungi. Acute toxicity values for mammals exposed to TCE ranged from 457 mg/kg bd wt to 2,190 mg/kg bd wt (LOEC).

For chronic values in terrestrial invertebrates, a NOEC of 1 mg/L and a LOEC of 30 mg/L were reported in nematodes over 28 days, resulting in a ChV of 5 mg/L. Chronic toxicity values were reported for terrestrial plants exposed to TCE through soil with a NOEC of 50 mg/L, a LOEC of 150 mg/L, and a ChV of 87 mg/L over two months. Chronic toxicity was also observed in terrestrial plants exposed through the air with concentrations of TCE as low as 2.7-10.8 $\mu g/m^3$ over a 6-month time-period.

As stated in Section 2.3.1, TCE is not expected to partition to soil but is expected to volatilize to air, based on its physical chemical properties. Review of hazard data for terrestrial organisms shows potential hazard; however, physical chemical properties do not support an exposure pathway through water and soil pathways to these organisms.

Toxicity to Sediment Organisms

No data on the toxicity to sediment organisms (e.g. *Lumbriculus variegatus*, *Hyalella azteca, Chironomus riparius*) were found; however, as stated in Section 2.3.1, TCE is not expected to partition to sediment, based on physical chemical properties.

Toxicity to Microorganisms

Toxicity values for microorganisms, including microorganisms in activated sludge and ciliates, were found during EPA's review. Values range from a 3-hour EC_{50} of 260 mg/L for inhibition of respiration in activated sludge to a 24-hour EC_{50} of 410 mg/L for growth inhibition in the ciliate *Tetrahymena pyriformis*.

ED_004056A_00072837-00041

Table 2-8. Ecological Hazard Characterization of TCE

Duration	Test organism	Endpoint	Hazard value*	Units	Effect Endpoint	Citation
Aquatic Organisms						
Acute	Fish	LC_{50}	1.9 – 66.8	mg/L	Mortality	Yoshioka (1986); Alexander (1978)
	Aquatic invertebrates	EC_{50}	7.8 – 22	mg/L	Mortality	Abernethy (1986); Leblanc (1980)
	Algae	EC_{50}	26.24 – 820	mg/L	Growth	Tsai (2007); Lukavsky et al. (2011)
	Amphibian	LC_{50}	412.0 – 490.0	mg/L	Mortality	Fort (2001)
		EC_{50}	22 – >85	mg/L	Deformities	McDaniel et al. (2004)
	Planarian	LC_{50}	1.7	mg/L	Mortality	Yoshioka (1986)
	Acute COC	0.34		mg/L		
Chronic	Fish	NOEC LOEC ChV	10.568 20.915 14.850	mg/L	Mortality	Smith (1991)
	Aquatic invertebrates	NOEC LOEC ChV	7.1 12 9.2	mg/L	Reproduction	Niederlehner et al. (1998)
	Algae	NOEC LOEC ChV	0.02 0.05 0.03	mg/L	Growth	Labra et al. (2010)
	Chronic COC	0.003		mg/L		
Terrestrial Organisms						
Acute	Earthworm	LC_{50}	105	$\mu g/cm^2$	Mortality	Neuhauser (1985); Neuhauser (1986)
	Terrestrial plant (Hydroponic or soil exposure)	LOEC/EC_{50}	118 - >1,000	mg/L	Zero growth; growth	Dietz and Schnoor (2001); Ballhorn (1984)
	Terrestrial plant (air exposure)	LOEC	10.8	$\mu g/m^3$	Reduction in Photosynthetic Pigment	Environment Canada (1993)

	Mammalian	LOEC	457 – 2,190	mg/kg bdwt	Ratio of polychromatic cells to micronucleated in bone marrow; survival	Hrelia et al. (1994); Hoffmann (1987)
Chronic	Nematode	NOEC LOEC ChV	1 30 5	mg/L	Abundance	Fuller et al. (1997)
	Terrestrial plant (soil exposure)	NOEC LOEC ChV	50 150 87	mg/L	Growth	Strycharz and Newman (2009)
	Terrestrial plant (air exposure)	LOEC	2.7 – 10.8	$\mu g/m^3$	Reduction in Photosynthetic Pigment	Environment Canada (1993)
Microorganisms						
Acute	Microorganisms	EC_{50}	260 – 410	mg/L	Respiration inhibition; population growth rate	ECHA (2017a); Yoshioka (1985)

* Values in the table are presented in the number of significant figures reported by the study authors.

Concentrations of Concern

The concentrations of concern (COCs) for aquatic ecological endpoints were derived based on the ecological hazard data for TCE. The information below describes how the acute and chronic COCs were calculated for aquatic toxicity.

The acute COC is derived by dividing the planarian 7-day LC_{50} of 1.7 mg/L (the lowest acute value in the dataset for aquatic organisms) by an assessment factor (AF) of 5 as described in (U.S. EPA, 2013):

- Lowest value for the 7-day planarian LC_{50} (1.7 mg/L) / AF of 5 = 0.34 mg/L; 0.34 x 1,000 = 340 µg/L.

The acute COC of 340 ppb, derived from the acute planarian endpoint, will be used for TCE.

The chronic COC is derived by dividing the algae ChV of 0.03 mg/L (the lowest chronic value in the dataset for aquatic organisms) by an assessment factor of 10 as described in (U.S. EPA, 2013):

- Lowest value for algae ChV (0.03 mg/L) / AF of 10 = 0.003 mg/L; 0.003 x 1,000 = 3 µg/L.

The chronic COC of 3 ppb, derived from the chronic algal endpoint, will be used for TCE.

The application of assessment factors is based on established EPA/OPPT methods (U.S. EPA, 2012b), (U.S. EPA, 2013) and were used in this hazard assessment to calculate lower bound effect levels (referred to as the concentration of concern or COC) that would likely encompass more sensitive species not specifically represented by the available experimental data. Also, assessment factors are included in the COC calculation to account for differences in inter- and intra-species variability, as well as laboratory-to-field variability. It should be noted that these assessment factors are dependent upon the availability of datasets that can be used to characterize relative sensitivities across multiple species within a given taxa or species group, but are often standardized in risk assessments conducted under TSCA, since the data available for most industrial chemicals are limited.

In conclusion, the hazard of TCE to aquatic organisms from acute exposures is moderate, and the hazard from chronic exposures is high based on available data. The hazard of TCE is expected to be low for sediment-dwelling organisms and terrestrial organisms based on physical and chemical properties of TCE.

2.4.2 Human Health Hazards

TCE has an existing EPA IRIS Assessment (U.S. EPA, 2011c) and an ATSDR Toxicological Profile (ATSDR, 2014a); hence, many of the hazards of TCE have been previously compiled and systematically reviewed. Furthermore, EPA previously reviewed data/information on health effects endpoints, identified hazards and conducted dose-response analysis in the TSCA Work Plan Chemical Risk Assessment of TCE (U.S. EPA, 2014c). EPA has relied heavily on these comprehensive reviews in preparing this problem formulation. EPA expects to use these previous analyses as a starting point for identifying key and supporting studies to inform the human health hazard assessment, including dose-response analysis. The relevant studies will be evaluated using the data quality criteria in the *Application of Systematic Review in TSCA Risk Evaluations document* (U.S. EPA, 2018). EPA also expects to consider other studies (e.g., more recently published, alternative test data) that have been published since these reviews, as identified in the literature search conducted by the Agency for TCE [*Trichloroethylene (CASRN 79-01-6) Bibliography: Supplemental File for the TSCA Scope Document*) (EPA-HQ-OPPT-2016-0737; U.S. EPA, 2017g)]. Based on reasonably available information, the following sections describe the potential hazards associated with TCE.

2.4.2.1 Non-Cancer Hazards

Acute Toxicity

Human volunteers reported mild nose and throat irritation in TCE inhalation studies (U.S. EPA, 2014c) and laboratory studies have also demonstrated acute effects of TCE on the respiratory tract in the form of both localized irritation and broad fibrosis as well as labored breathing (U.S. EPA, 2011c). Acute exposures to TCE have additionally shown to cause central nervous system depression and cardiac arrhythmias while there are also reports of deaths following accidental exposure (NAC/AEGL, 2009). An Acute Exposure Guideline Level (AEGL) has been derived for TCE (NAC/AEGL, 2009).

Liver toxicity

Several available human studies have reported clinical and functional evidence of TCE-induced liver toxicity. The primary effect of TCE on liver in laboratory rodents is hepatomegaly (which has also been observed in humans), with only mild effects seen in other indicators of toxicity such as necrosis and enzyme changes (U.S. EPA, 2011c).

Kidney toxicity

Multiple lines of evidence in human and animal studies support the conclusion that TCE induces toxic nephropathy. Visible effects resulting from TCE exposure include both histopathological and weight changes in the kidney (U.S. EPA, 2011c).

Reproductive/developmental toxicity
Human studies have reported TCE exposure to be associated with increased sperm density and decreased sperm quality, altered sexual drive or function, and altered serum endocrine levels. Male reproductive effects have been corroborated by several laboratory animal studies reporting effects on sperm, libido/copulatory behavior and serum hormone levels, while histopathological lesions in testis or epididymis, altered sperm-oocyte binding and reduced fertilization have also been observed. Evidence for female reproductive toxicity is more limited, however delayed parturition (giving birth) was identified as an adverse effect (U.S. EPA, 2011c). Additionally, epidemiological and/or experimental animal studies of TCE have reported increases in total birth defects, central nervous system (CNS) defects, oral cleft defects, eye/ear defects, kidney/urinary tract disorders, musculoskeletal birth anomalies, lung/respiratory tract disorders, skeletal defects, developmental immunotoxicity, and cardiac defects (U.S. EPA, 2011c). Increased incidence of fetal cardiac malformations was identified as the most sensitive health endpoint within the developmental toxicity domain in the TSCA Work Plan Chemical Risk Assessment of TCE (U.S. EPA, 2014c).

Neurotoxicity
Both epidemiologic and animal studies have reported abnormalities in trigeminal nerve function and psychomotor effects in association with TCE exposure. Laboratory animal studies have demonstrated additional critical effects from TCE exposure including auditory impairment and decreased wakefulness (U.S. EPA, 2011c).

Immunotoxicity
TCE promotes both immunosuppressive and auto-immune effects in humans and animals. Sensitive markers of immunosuppression that have been observed include decreased thymus weight and cellularity as well as reduced immune cell response. Auto-immune effects include hypersensitivity (discussed in sensitization section) and increased anti dsDNA/ssDNA antibodies (U.S. EPA, 2011c).

Sensitization
Limited epidemiological data do not support an association between TCE exposure and allergic respiratory sensitization or asthma; however, there is strong human evidence for severe skin sensitization resulting in dermatitis, mucosal lesions and often systemic effects such as hepatitis. Skin sensitization tests on rodents corroborate the contact allergenicity potential of TCE and its metabolites along with the resulting immune-mediated hepatitis (U.S. EPA, 2011c).

2.4.2.2 Genotoxicity and Cancer Hazards

Studies in humans have shown convincing evidence of a causal association between TCE exposure in humans and kidney cancer as well as human evidence of TCE carcinogenicity in the liver and lymphoid tissues. Further support for TCE's carcinogenic characterization comes from positive results in multiple rodent cancer bioassays in rats and mice of both sexes, similar toxicokinetics between rodents and humans, mechanistic data supporting a mutagenic mode of action for kidney tumors, and the lack of mechanistic data supporting the conclusion that any of the mode(s) of action for TCE-induced rodent tumors are irrelevant to humans (U.S. EPA, 2011c). TCE is considered to have both genotoxic and non-genotoxic mechanisms. Following EPA's Guidelines for Carcinogen Risk Assessment (U.S. EPA, 2005), including a weight of evidence judgement, TCE is considered "carcinogenic to humans" by all

ED_004056A_00072837-00045

routes of exposure and calculated quantitative estimates of risk from oral and inhalation exposures (U.S. EPA, 2011c).

2.4.2.3 Potentially Exposed or Susceptible Subpopulations

TSCA requires that the determination of whether a chemical substance presents an unreasonable risk include consideration of unreasonable risk to "a potentially exposed or susceptible subpopulation identified as relevant to the risk evaluation" by EPA. TSCA § 3(12) states that "the term 'potentially exposed or susceptible subpopulation' means a group of individuals within the general population identified by the Administrator who, due to either greater susceptibility or greater exposure, may be at greater risk than the general population of adverse health effects from exposure to a chemical substance or mixture, such as infants, children, pregnant women, workers, or the elderly." In developing the hazard assessment, EPA will evaluate available data to ascertain whether some human receptor groups may have greater susceptibility than the general population to the chemical's hazard(s).

2.5 Conceptual Models

EPA risk assessment guidance (U.S. EPA, 2014b, 1998), defines Problem Formulation as the part of the risk assessment framework that identifies the factors to be considered in the assessment. It draws from the regulatory, decision-making and policy context of the assessment and informs the assessment's technical approach.

A conceptual model describes the actual or predicted relationships between the chemical substance and receptors, either human or environmental. These conceptual models are integrated depictions of the conditions of use, exposures (pathways and routes), hazards and receptors. The initial conceptual models describing the scope of the assessment for trichoroethylene, have been refined during problem formulation. The changes to the conceptual models in this problem formulation are described along with the rationales.

In this section, EPA outlines those pathways that will be included and further analyzed in the risk evaluation; will be included but will not be further analyzed in risk evaluation; and will not be included in the TSCA risk evaluation and the underlying rationale for these decisions.

EPA determined as part of problem formulation that it is not necessary to conduct further analysis on certain exposure pathways that were identified in the trichloroethylene scope document and that remain in the risk evaluation. Each risk evaluation will be "fit-for-purpose," meaning not all conditions of use will warrant the same level of evaluation and the Agency may be able to reach some conclusions without extensive or quantitative risk evaluations. 82 FR 33726, 33734, 33739 (July 20, 2017).

As part of this problem formulation, EPA also identified exposure pathways under other environmental statutes, administered by EPA, which adequately assess and effectively manage exposures and for which long-standing regulatory and analytical processes already exist, i.e., the Clean Air Act (CAA), the Safe Drinking Water Act (SDWA), the Clean Water Act (CWA) and the Resource Conservation and Recovery Act (RCRA). EPA worked closely with the offices within EPA that administer and implement the regulatory programs under these statutes. In some cases, EPA has determined that chemicals present in various media pathways (i.e., air, water, land) fall under the jurisdiction of existing regulatory programs and associated analytical processes carried out under other EPA-administered statutes and have been assessed and effectively managed under those programs. EPA believes that the TSCA risk evaluation should focus on those exposure pathways associated with TSCA uses that are not subject to the regulatory regimes discuss above because these pathways are likely to represent the greatest areas of concern to EPA. As a result, EPA does not plan to include in the risk evaluation certain exposure pathways identified in the TCE scope document.

2.5.1 Conceptual Model for Industrial and Commercial Activities and Uses: Potential Exposures and Hazards

The revised conceptual model (Figure 2-2) describes the pathways of exposure from industrial and commercial activities and uses of trichloroethylene that EPA plans to include in the risk evaluation. There are exposures to workers and/or occupational non-users via inhalation routes and/or exposures to workers via dermal routes for all conditions of use identified in this problem formulation. In EPA's 2014 risk assessment (U.S. EPA, 2014c), inhalation exposures to vapor were assessed as the most likely exposure route; however, there are potential dermal exposures for some conditions of use, such as maintenance of industrial degreasing tanks and manual handling of metal parts removed from industrial degreasing tanks. In addition to the pathways illustrated in the figure, EPA will evaluate activities resulting in exposures associated with distribution in commerce (e.g. loading, unloading) throughout the various lifecycle stages and conditions of use (e.g. manufacturing, processing, industrial use, commercial use, disposal) rather than a single distribution scenario.

Inhalation

There is potential for inhalation exposures to TCE in worker scenarios. EPA's 2014 risk assessment (U.S. EPA, 2014c) of TCE in degreasing, spot cleaning and arts & crafts uses assumed that inhalation as the primary exposure route based on the physical-chemical properties of TCE (e.g., high vapor pressure). Inhalation exposures for workers are regulated by OSHA's occupational safety and health standards for TCE, which include a PEL of 100 ppm TWA, exposure monitoring, control measures and respiratory protection. EPA expects that exposure via inhalation will be the most significant route of exposure for occupational exposure scenarios, including those involving workers and occupational non-users and will be further analyzed.

Dermal

There is potential for dermal exposures to TCE in many worker scenarios. Exposures to skin that are instantaneous would be expected to evaporate before significant dermal absorption could occur based on the physical chemical properties including the vapor pressure, water solubility and log Kow (the estimate from IHSkinPerm, a mathematical tool for estimating dermal absorption, is 0.8% absorption and 99.2% volatilization). Exposure that occurs as a deposition over time or a repeated exposure that maintains a thin layer of liquid TCE would have greater absorption (the estimate from IHSkinPerm for an 8-hr exposure is 1.6% absorption and 98.4% volatilization). In both instantaneous or repeated exposure scenarios, the dermal exposures to liquid TCE would be concurrent with inhalation exposures and overall the contribution of dermal exposure to the total exposure is relatively small. This is in agreement with the NIOSH skin notation profile for TCE, which estimates a low hazard potential by dermal absorption for systemic effects when inhalation and dermal exposures are concurrent (NIOSH, 2017). Therefore, it is not anticipated that dermal absorption will be significant for the majority of occupational exposure scenarios; thus, non-occluded dermal exposure scenarios will not be analyzed for workers. Based on the 2017 NIOSH Skin Notation Profile for TCE, TCE is associated with systemic and direct (i.e., irritation) effects, as well as sensitization. An occluded exposure scenario, wherein liquid TCE is not able to evaporate readily, may have dermal exposures that significantly contribute to the total exposure or effects on the skin (e.g., dermal sensitization). An example of such an occluded scenario includes TCE being trapped under a worker's glove during occupational activities, thus preventing the rapid volatilization that generally inhibits dermal absorption. Therefore, occluded dermal exposure scenarios will be analyzed for workers.

Generally, occupational non-users would not be expected to have dermal contact with liquid TCE; therefore, dermal exposure for these receptors will not be analyzed.

Waste Handling, Treatment and Disposal

Figure 2-2 shows that waste handling, treatment and disposal is expected to lead to the same pathways as other industrial and commercial activities and uses. The path leading from the "Waste Handling, Treatment and Disposal" box to the "Hazards Potentially Associated with Acute and/or Chronic Exposures See Section 2.4.2" box was re-routed to accurately reflect the expected exposure pathways, routes, and receptors associated with these conditions of use of TCE.

For each condition of use identified in Figure 2-2, a determination was made as to whether or not each unique combination of exposure pathway, route, and receptor will be further analyzed in the risk evaluation. The results of that analysis along with the supporting rationale are presented in Appendix C and Appendix E.

ED_004056A_00072837-00048

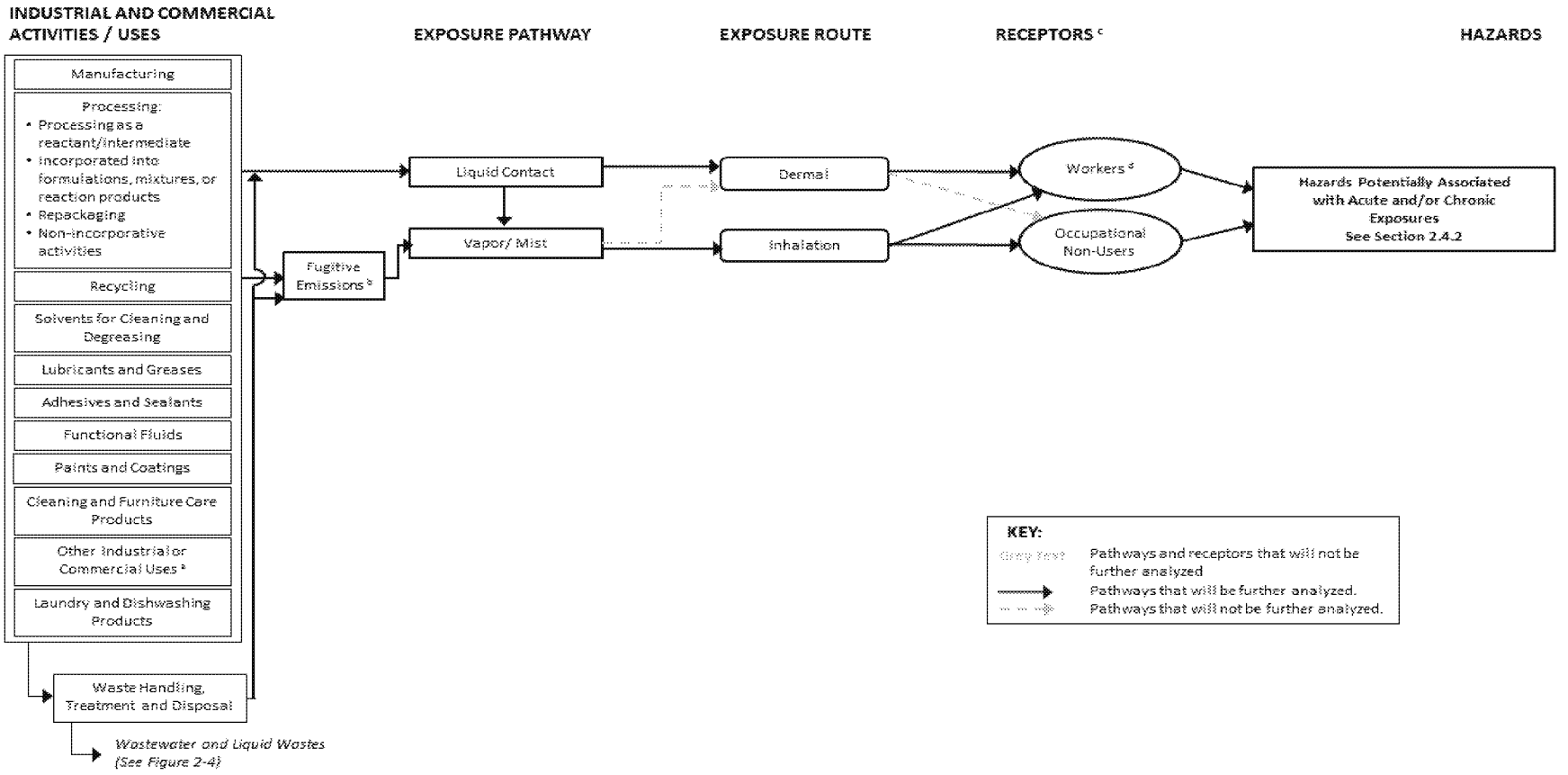

Figure 2-2. TCE Conceptual Model for Industrial and Commercial Activities and Uses: Potential Exposures and Hazards
The conceptual model presents the exposure pathways, exposure routes and hazards to human receptors from industrial and commercial activities and uses of TCE.

[a] Some products are used in both commercial and consumer applications. Additional uses of TCE are included in Table 2-3.

[b] Fugitive air emissions are those that are not stack emissions, and include fugitive equipment leaks from valves, pump seals, flanges, compressors, sampling connections and open-ended lines; evaporative losses from surface impoundment and spills; and releases from building ventilation systems.

[c] Receptors include potentially exposed or susceptible subpopulations.

[d] When data and information are available to support the analysis, EPA also considers the effect that engineering controls and/or personal protective equipment have on occupational exposure levels.

ED_004056A_00072837-00049

2.5.2 Conceptual Model for Consumer Activities and Uses: Potential Exposures and Hazards

The revised conceptual model (Figure 2-3) illustrates the pathways of exposure from consumer uses of TCE that EPA plans to include in the risk evaluation. In the (U.S. EPA, 2014c) risk assessment, inhalation exposures to vapor and mist were assessed as the most likely exposure route; however, there are potential dermal exposures for some conditions of use. It should be noted that some consumers may purchase and use products primarily intended for commercial use.

Inhalation

There is potential for inhalation exposures to TCE from consumer uses. As mentioned above, EPA/OPPT's 2014 risk assessment (U.S. EPA, 2014c) of TCE in degreasing, spot cleaning and arts & crafts uses assumed that inhalation is the main exposure pathway based on the physical-chemical properties of TCE (e.g., high vapor pressure). EPA expects that exposure via inhalation will be the primary route of exposure for consumer exposures to consumers and bystanders and will be evaluated.

Dermal

There is potential for dermal exposures to TCE from consumer uses. As described in section 2.5.1, TCE in direct contact with skin would be expected to evaporate before significant dermal absorption could occur. Based on TCE's physical chemical properties, including the vapor pressure, water solubility and log Kow, only 0.8% is expected to be absorbed dermally after instantaneous exposure and only 1.6% of TCE is expected to be absorbed dermally after an 8-hour duration of continual deposition. Furthermore, dermal exposures to liquid TCE are expected to be concurrent with inhalation exposures, which reflect the preponderance of overall exposure from a particular use or activity for most consumer exposure scenarios. Therefore, non-occluded dermal exposure scenarios will not be analyzed for systemic effects for users. However, dermal sensitization will still be considered for these scenarios. There may also be certain scenarios with a higher dermal exposure potential, for example, an occluded scenario where liquid TCE is not able to evaporate readily such as a user holding a rag soaked with liquid TCE against their palm during a cleaning activity. Therefore, occluded dermal exposure scenarios will be evaluated for both systemic effects and sensitization and non-occluded scenarios will only be evaluated for sensitization. In scenarios involving exposure to TCE vapor, inhalation and dermal exposures would also be concurrent, with predominate exposure from inhalation. A dermal to inhalation uptake ratio of around 0.1% for vapor to skin scenarios is predicted using IHSkinPerm. Therefore, only the inhalation exposures will be analyzed in these cases.

Generally, individuals that have contact with liquid TCE would be users and not bystanders. Therefore, dermal exposures to liquid TCE are not expected and inhalation is the primary route of exposure for bystanders. There is potential for bystanders or users to have indirect dermal contact via contact with a surface upon which TCE has been applied (e.g., counter, floor). Based on the expectation that TCE would evaporate from the surface rapidly, with <1% dermal absorption predicted from instantaneous contact, this route is unlikely to contribute significantly to overall exposure. Therefore, dermal exposure scenarios will not be analyzed for bystanders.

Oral

Oral exposure to TCE may occur through incidental ingestion of TCE mists that deposit in the upper respiratory tract. EPA initially assumed that mists may be swallowed. However, based on physical chemical properties, mists of TCE are expected to be rapidly absorbed in the respiratory tract or evaporate being introduced into the respiratory tract, thus contributing to the amount of TCE vapor in the air available for inhalation exposure. Furthermore, based on available toxicological data, EPA does not expect inhalation and oral routes of exposure to differ significantly in the toxicity of TCE. Therefore,

EPA will not analyze oral exposures to mists and instead will assume mists will be absorbed in the lungs.

Oral exposures could also occur through hand-to-mouth patterns following dermal contact with TCE. As described, dermal contact would not be expected for bystanders, and any TCE present on surfaces of the home or skin surfaces is expected to volatilize rapidly – making it available for inhalation as a vapor before oral ingestion may occur through such patterns. Therefore, EPA will not analyze oral exposures for users or bystanders and instead assume any mists present are absorbed in the lungs and any TCE present on surfaces are inhaled as vapors.

Disposal

EPA does not plan to further analyze exposure to consumers from disposal of consumer products. It is anticipated that most products will be disposed of in original containers, particularly those products that are purchased as aerosol cans. There may be some consumer exposure (dermal or inhalation) during clean up following use (e.g., spills, drips) leading to transient dermal exposure or inhalation exposure. Disposal of spent products are expected to be taken to municipal landfill sites and collected and disposed of as part of their waste handling practices.

ED_004056A_00072837-00051

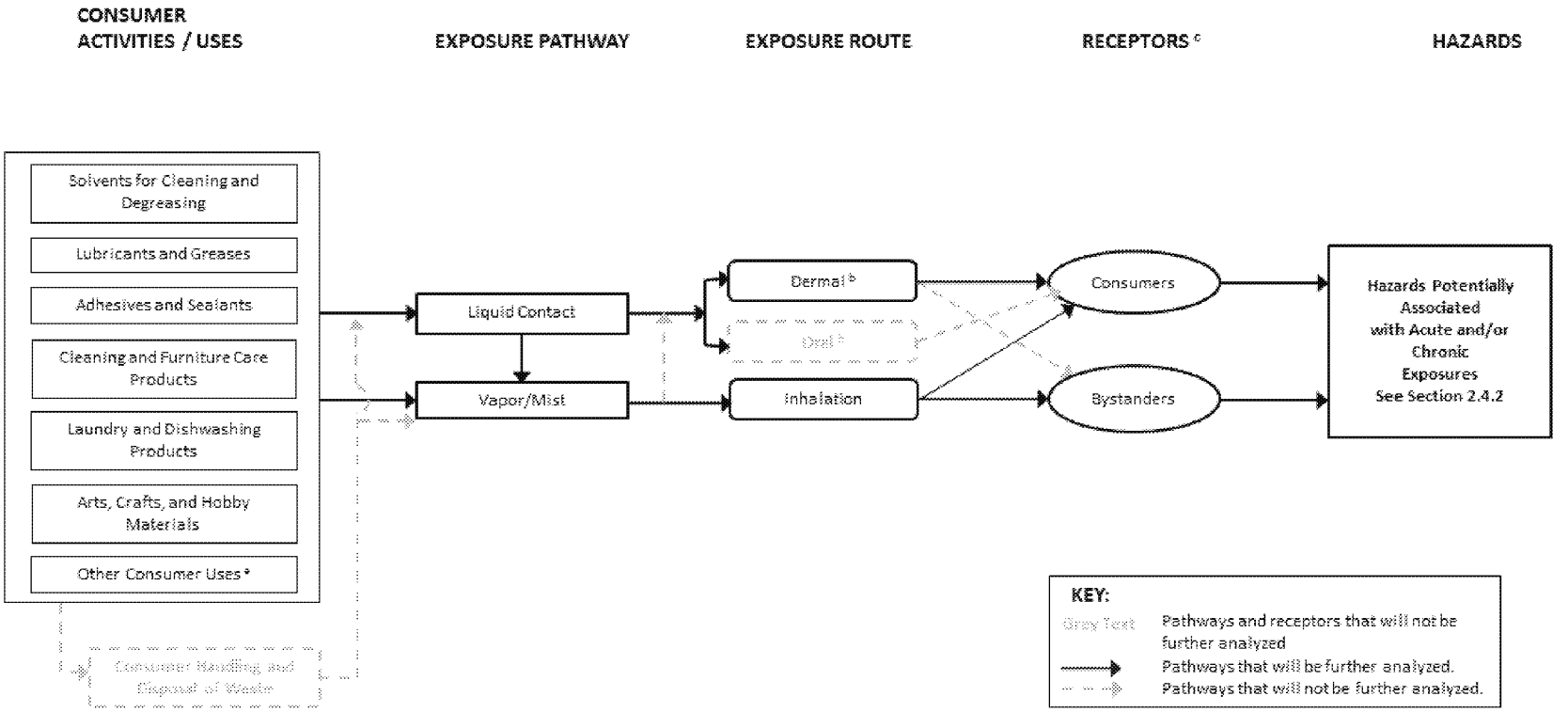

Figure 2-3. TCE Conceptual Model for Consumer Activities and Uses: Potential Exposures and Hazards

The conceptual model presents the exposure pathways, exposure routes and hazards to human receptors from consumer activities and uses of TCE.

[a] Some products are used in both commercial and consumer applications. Additional uses of TCE are included in Table 2-3.

[b] Exposure may occur through mists that deposit in the upper respiratory tract however, based on physical chemical properties, mists of TCE will likely be rapidly absorbed in the respiratory tract or evaporate and not result in an oral exposure. Although less likely given the physical-chemical properties, oral exposure may also occur from incidental ingestion of residue on hand/body.

[c] Receptors include potentially exposed or susceptible subpopulations.

ED_004056A_00072837-00052

2.5.3 Conceptual Model for Environmental Releases and Wastes: Potential Exposures and Hazards

The revised conceptual model Figure 2-4 illustrates the expected exposure pathways to human and ecological receptors from environmental releases and waste streams associated with industrial and commercial activities for TCE. The pathways that EPA plans to include and analyze further in risk evaluation are described in Section 2.5.3.1 and shown in the conceptual model. The pathways that EPA plans to include but not further analyze in risk evaluation are described in Section 2.5.3.2 and shown in the conceptual model. The pathways that EPA does not plan to include in risk evaluation are described in Section 2.5.3.3.

2.5.3.1 Pathways That EPA Plans to Include and Further Analyze in Risk Evaluation

EPA expects to analyze aquatic species (i.e. aquatic plants) exposed via contaminated surface water. There are no national recommended water quality criteria for the protection of aquatic life for TCE and as a result EPA does not believe that TCE exposure to aquatic organisms in surface water has been adequately assessed or effectively managed under other EPA statutory authorities. Trichloroethylene is released to surface water from ongoing industrial and/or commercial activities, as reported in recent TRI and DMR release and loading data. TRI reporting from 2015 indicates direct releases to surface water of 52 lbs/yr and indirect releases to surface water (i.e., sent off-site to a publically owned treatment works (POTW)) of 28 lbs/yr. In 2016, the top ten DMR dischargers reported site-specific loadings to surface water of 17.5 to 1,564 lbs/yr. Within the past ten years of surface water monitoring data from STORET, there are detections (e.g., maximum of 50 ppb and average of 4.5 ppb), that do not exceed the preliminary acute COCs (acute COC = 340 ppb, based on an acute planarian endpoint), but did exceed the preliminary chronic COC (chronic COC = 3 ppb, based on a chronic algal endpoint). EPA has not developed CWA section 304(a) recommended water quality criteria for the protection of aquatic life for trichloroethylene, and there are no national recommended criteria for this use available for adoption into state water quality standards and available for use in NPDES permits (see Section 2.5.3.3). Due to the rational above, EPA will further analyze aquatic life risk evaluation.

2.5.3.2 Pathways that EPA Plans to Include But Not Further Analyze

Based on TCE's fate properties, it is not anticipated to partition to biosolids during wastewater treatment. TCE has a predicted 81% wastewater treatment removal efficiency, predominately due to volatilization during aeration. Any TCE present in the water portion of biosolids following wastewater treatment and land application would be expected to rapidly volatilize into air. Furthermore, TCE is not anticipated to remain in soil, as it is expected to either volatilize into air or migrate through soil into groundwater. Therefore, the land application of biosolids will not be analyzed as a pathway for human or ecological exposure.

Based on TCE's fate properties, it is anticipated to primarily volatilize following discharge to surface water; thus, it is not expected that a significant portion of TCE would be available to enter the sediment compartment.

Review of hazard data for terrestrial organisms shows potential hazard; however, physical chemical properties do not support an exposure pathway through water and soil pathways to these organisms. Therefore, exposure to terrestrial organisms will not be analyzed.

ED_004056A_00072837-00053

2.5.3.3 Pathways that EPA Does Not Plan to Include in the Risk Evaluation

Exposures to receptors (i.e. general population, terrestrial species) may occur from industrial and/or commercial uses, industrial releases to air, water or land, and other conditions of use. As described in Section 2.5, EPA does not expect to include in the risk evaluation pathways under programs of other environmental statutes, administered by EPA, which adequately assess and effectively manage exposures and for which long-standing regulatory and analytical processes already exist. These pathways are described below.

Ambient Air Pathway

The Clean Air Act (CAA) contains a list of hazardous air pollutants (HAP) and provides EPA with the authority to add to that list pollutants that present, or may present, a threat of adverse human health effects or adverse environmental effects. For stationary source categories emitting HAP, the CAA requires issuance of technology-based standards and, if necessary, additions or revisions to address developments in practices, processes, and control technologies, and to ensure the standards adequately protect public health and the environment. The CAA thereby provides EPA with comprehensive authority to regulate emissions to ambient air of any hazardous air pollutant.

TCE is a HAP. EPA has issued a number of technology-based standards for source categories that emit TCE to ambient air and, as appropriate, has reviewed, or is in the process of reviewing remaining risks. Because stationary source releases of TCE to ambient air are adequately assessed and any risks effectively managed when under the jurisdiction of the CAA, EPA does not plan to evaluate emission pathways to ambient air from commercial and industrial stationary sources or associated inhalation exposure of the general population or terrestrial species in this TSCA evaluation.

Drinking Water Pathway

EPA has regular analytical processes to identify and evaluate drinking water contaminants of potential regulatory concern for public water systems under the Safe Drinking Water Act (SDWA). Under SDWA EPA must also review and revise "as appropriate" existing drinking water regulations every 6 years.

EPA has promulgated National Primary Drinking Water Regulations (NPDWRs) under the Safe Drinking Water Act for trichloroethylene. EPA has set an enforceable Maximum Contaminant Level (MCL) as close as feasible to a health based, non-enforceable Maximum Contaminant Level Goal (MCLG). Feasibility refers to both the ability to treat water to meet the MCL and the ability to monitor water quality at the MCL, SDWA Section 1412(b)(4)(D), and public water systems are required to monitor for the regulated chemical based on a standardized monitoring schedule to ensure compliance with the MCL.

Hence, because the drinking water exposure pathway for trichloroethylene is currently addressed in the SDWA regulatory analytical process for public water systems, EPA does not plan to include this pathway in the risk evaluation for trichloroethylene under TSCA. EPA's Office of Water and Office of Pollution Prevention and Toxics will continue to work together providing understanding and analysis of the SDWA regulatory analytical processes and to exchange information related to toxicity and occurrence data on chemicals undergoing risk evaluation under TSCA.

Ambient Water Pathway

EPA develops recommended water quality criteria under section 304(a) of the CWA for pollutants in surface water that are protective of aquatic life or human health designated uses. A criterion is a hazard assessment only; i.e., there is no exposure assessment or risk estimation. When states adopt criteria that EPA approves as part of state's regulatory water quality standards, exposure is considered when state

permit writers determine if permit limits are needed and at what level for a specific discharger of a pollutant to ensure protection of the designated uses of the receiving water. This is the process used under the CWA to address risk to human health and aquatic life from exposure to a pollutant in ambient waters.

EPA has developed CWA section 304(a) recommended human health criteria for 122 chemicals and aquatic life criteria for 47 chemicals. A subset of these chemicals is identified as "priority pollutants" (103 human health and 27 aquatic life), including trichloroethylene. The CWA requires that states adopt numeric criteria for priority pollutants for which EPA has published recommended criteria under section 304(a), the discharge or presence of which in the affected waters could reasonably be expected to interfere with designated uses adopted the state. For other pollutants with recommended human health criteria, EPA regulations require that state criteria contain sufficient parameters and constituents to protect designated uses. Once states adopt criteria as water quality standards, the CWA requires that National Pollutant Discharge Elimination System (NPDES) discharge permits include effluent limits as stringent as necessary to meet standards. CWA section 301(b)(1)(C). This permit issuance process accounts for risk in accordance with the applicable ambient water exposure pathway (human health or aquatic life as applicable) for the designated water use and, therefore, can the risk from the pathway can be considered assessed and managed. If numeric water quality criteria are not available for a pollutant for permit writers to develop permit limits, the risk associated with the ambient water exposure pathway cannot be considered assessed and managed.

EPA has developed recommended water quality criteria for protection of human health for trichloroethylene which are available for possible adoption into state water quality standards and are available for possible use by NPDES permitting authorities in deriving effluent limits to meet state narrative criteria. As such, this pathway will not be included in the risk evaluation under TSCA. EPA's Office of Water and Office of Pollution Prevention and Toxics will continue to work together providing understanding and analysis of the CWA water quality criteria development process and to exchange information related to toxicity of chemicals undergoing risk evaluation under TSCA. EPA may update its CWA section 304(a) water quality criteria for trichloroethylene in the future under the CWA.

Disposal, Sediment and Soil Pathways

TCE is included on the list of hazardous wastes under the Resource Conservation and Recovery Act (RCRA) (40 CFR §§ 261.22, 261.31, 261.32, 261.24; Appendix VII of 40 CFR 261). The general RCRA standard in section 3004(a) for the technical (regulatory) criteria that govern the management (treatment, storage, and disposal) of hazardous waste (i.e., Subtitle C) are those "necessary to protect human health and the environment," RCRA 3004(a). The regulatory criteria for identifying "characteristic" hazardous wastes and for "listing" a waste as hazardous also relate solely to the potential risks to human health or the environment (40 CFR §§ 261.11, 261.21-261.24). RCRA statutory criteria for identifying hazardous wastes require EPA to "tak[e] into account toxicity, persistence, and degradability in nature, potential for accumulation in tissue, and other related factors such as flammability, corrosiveness, and other hazardous characteristics." Subtitle C controls cover not only hazardous wastes that are landfilled, but also hazardous wastes that are incinerated (subject to joint control under RCRA Subtitle C and the Clean Air Act (CAA) hazardous waste combustion Maximum Achievable Control Technology (MACT)) or injected into Underground Injection Control (UIC) Class I hazardous waste wells (subject to joint control under Subtitle C and the Safe Drinking Water Act (SDWA)).

Emissions to ambient air from municipal and industrial waste incineration and energy recovery units will not be included in the risk evaluation, as they are regulated under section 129 of the Clean Air Act. CAA section 129 also requires EPA to review and, if necessary, add provisions to ensure the standards

adequately protect public health and the environment. Thus, combustion by-products from incineration treatment of TCE wastes ((< 2 million lbs identified in Table 2-6) would be subject to these regulations, as would TCE burned for energy recovery (2.6 million lbs).

EPA does not plan to include on-site releases to land that go to underground injection in the risk evaluation. TRI reporting in 2015 indicated 122 pounds released to underground injection to a Class I well and no releases to underground injection wells of Classes II-VI. Environmental disposal of trichloroethylene injected into Class I well types are presumed to be managed and prevented from further environmental release by RCRA and SDWA regulations. Therefore, disposal of trichloroethylene via underground injection is not likely to result in environmental and general population exposures.

EPA does not plan to include releases to land that go to RCRA Subtitle C hazardous waste landfills in the risk evaluation. Based on 2015 reporting, the majority of TRI land disposal includes Subtitle C landfills (49,501 pounds) with a much smaller amount transferred to "other landfills" both on-site and off-site (400 pounds reported in 2015). TCE is present in commercial and consumer products that may be disposed of in landfills, such as Municipal Solid Waste landfills. Design standards for Subtitle C landfills require double liner, double leachate collection and removal systems, leak detection system, run on, runoff, and wind dispersal controls, and a construction quality assurance program. They are also subject to closure and post-closure care requirements including installing and maintaining a final cover, continuing operation of the leachate collection and removal system until leachate is no longer detected, maintaining and monitoring the leak detection and groundwater monitoring system. Bulk liquids may not be disposed in Subtitle C landfills. Subtitle C landfill operators are required to implement an analysis and testing program to ensure adequate knowledge of waste being managed, and to train personnel on routine and emergency operations at the facility. Hazardous waste being disposed in Subtitle C landfills must also meet RCRA waste treatment standards before disposal. Given these controls, general population exposure in groundwater from Subtitle C landfill leachate is not expected to be a significant pathway.

EPA does not plan to include on-site releases to land from RCRA Subtitle D municipal solid waste landfills or exposures of the general population (including susceptible populations) or terrestrial species from such releases in this TSCA evaluation. While permitted and managed by the individual states, municipal solid waste (MSW) landfills are required by federal regulations to implement some of the same requirements as Subtitle C landfills. MSW landfills generally must have a liner system with leachate collection and conduct groundwater monitoring and corrective action when releases are detected. MSW landfills are also subject to closure and post-closure care requirements, and must have financial assurance for funding of any needed corrective actions. MSW landfills have also been designed to allow for the small amounts of hazardous waste generated by households and very small quantity waste generators (less than 220 lbs per month). Bulk liquids, such as free solvent, may not be disposed of at MSW landfills.

EPA does not expect to include on-site releases to land from industrial non-hazardous and construction/demolition waste landfills. Industrial non-hazardous and construction/demolition waste landfills are primarily regulated under state regulatory programs. States must also implement limited federal regulatory requirements for siting, groundwater monitoring, and corrective action, and a prohibition on open dumping and disposal of bulk liquids. States may also establish additional requirements such as for liners, post-closure and financial assurance, but are not required to do so. Therefore, EPA does not expect to include this pathway in the risk evaluation.

ED_004056A_00072837-00056

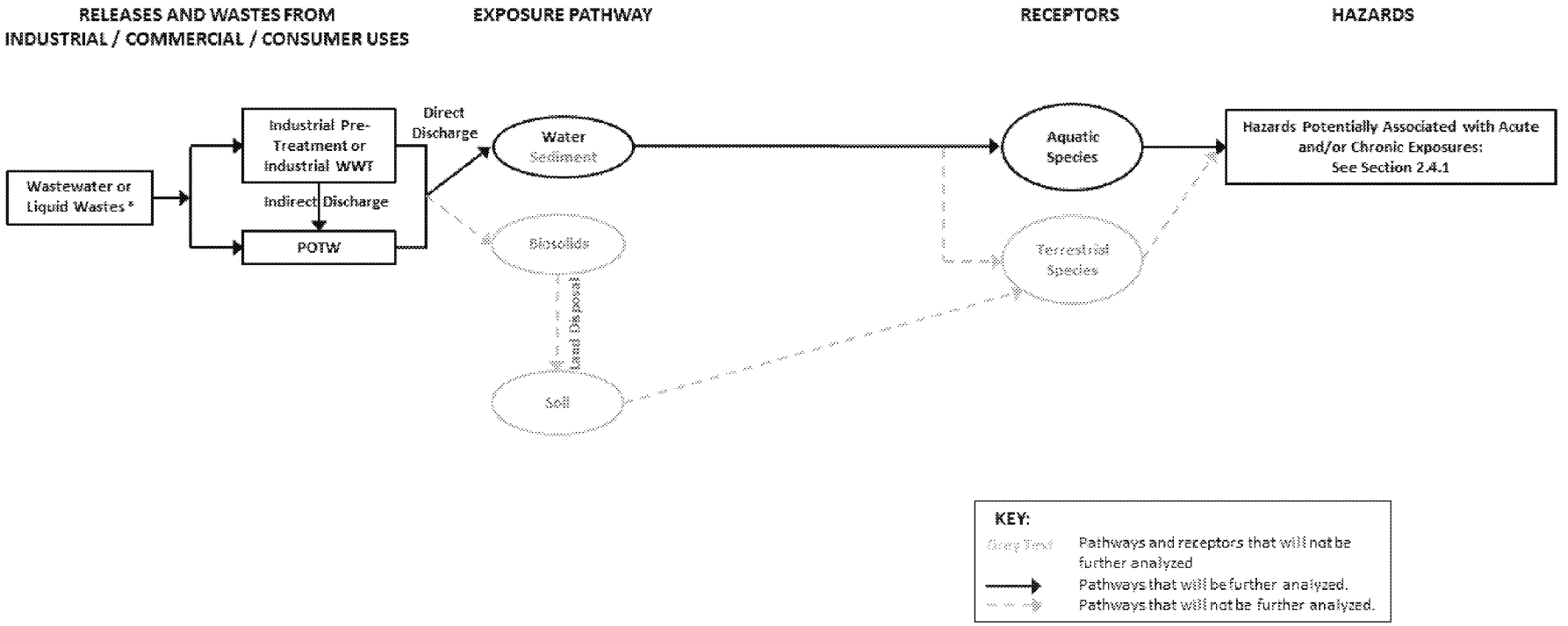

Figure 2-4. TCE Conceptual Model for Environmental Releases and Wastes: Potential Exposures and Hazards

The conceptual model presents the exposure pathways, exposure routes and hazards to human and environmental receptors from environmental releases and wastes of TCE.

[a] Industrial wastewater or liquid wastes may be treated on-site and then released to surface water (direct discharge), or pre-treated and released to POTW (indirect discharge).

ED_004056A_00072837-00057

2.6 Analysis Plan

The analysis plan presented here is a refinement of the initial analysis plan that was published in the Scope of the Risk Evaluation for Trichloroethylene (EPA-HQ-OPPT-2016-0737-0057; U.S. EPA, 2017d).

The analysis plan outlined here is based on the conditions of use for trichloroethylene, as described in Section 2.2 of this problem formulation. EPA is implementing systematic review approaches to identify, select, assess, integrate and summarize the findings of studies supporting the TSCA risk evaluation. The analytical approaches and considerations in the analysis plan are used to frame the scope of the systematic review activities for this assessment. The supplemental document, *Application of Systematic Review in TSCA Risk Evaluations* (U.S. EPA, 2018), provides additional information about criteria and methods that have been and will be applied to the first 10 chemical risk evaluations.

While EPA has conducted a comprehensive search for reasonably available data as described in the Scope for TCE (EPA-HQ-OPPT-2016-0737-0057; U.S. EPA, 2017d), EPA encourages submission of additional existing data, such as full study reports or workplace monitoring from industry sources, that may be relevant for refining conditions of use, exposures, hazards and potentially exposed or susceptible subpopulations during the risk evaluation. EPA will continue to consider new information submitted by the public.

During risk evaluation, EPA will rely on the comprehensive literature results *Trichloroethylene (CASRN 79-01-6) Bibliography: Supplemental File for the TSCA Scope Document* (EPA-HQ-OPPT-2016-0737; U.S. EPA, 2017g) or supplemental literature searches to address specific questions. Further, EPA may consider any relevant confidential business information (CBI) in the risk evaluation in a manner that protects the confidentiality of the information from public disclosure. The analysis plan is based on EPA's knowledge of trichloroethylene to date, which includes partial, but not complete review of identified literature. If additional data or approaches become available, EPA may refine its analysis plan based on this information.

2.6.1 Exposure

Based on their physical-chemical properties, expected sources, and transport and transformation within the outdoor and indoor environment, chemical substances are more likely to be present in some media and less likely to be present in others. Media-specific exposure levels will vary based on the chemical substance of interest. For most high-priority chemical substances, non-zero background level(s) can be characterized through a combination of available monitoring data and modeling approaches.

2.6.1.1 Environmental Releases

EPA plans to further analyze releases to water, based on information described in Section 2.5. For the purposes of developing estimates of occupational exposure, EPA may use release related data in selected data sources such as the Toxics Release Inventory (TRI) and National Emissions Inventory (NEI) programs.

EPA expects to consider and analyze releases to water as follows:

1) **Review reasonably available published literature or information on processes and activities associated with TCE conditions of use to evaluate the types of releases and wastes generated.**

ED_004056A_00072837-00058

EPA plans to evaluate other sources of information such as the EPA Effluent Guidelines and may use these data in conducting the exposure assessment component of the risk evaluation.

EPA has reviewed some key data sources containing information on processes and activities resulting in releases, and the information found is shown below as well as in Appendix B.3. EPA will continue to review data sources identified in Appendix B.3 during risk evaluation. The evaluation strategy for engineering and occupational data sources discussed in the *Application of Systematic Review in TSCA Risk Evaluations document* (U.S. EPA, 2018) describes how studies will be reviewed.

2014 Draft ATSDR Toxicological Profile for TCE
U.S. EPA TRI Data (Reporting Year 2016 only)
U.S. EPA Generic Scenarios
OECD Emission Scenario Documents
U.S. EPA NEI Data
EU Registration, Evaluation, Authorization and Restriction of Chemicals (REACH) Specific Environmental Release Categories (SpERC) factsheets
Discharge Monitoring Report (DMR) surface water discharge data from NPDES-permitted facilities
EPA AP-42 Air Emission Factors

2) Review reasonably available chemical-specific release data, including measured or estimated release data (e.g., data collected under the TRI program).

EPA has reviewed key release data sources including the Toxics Release Inventory (TRI). EPA will continue to review relevant data sources as identified in Table_Apx B-4 during risk evaluation. EPA will match identified data to applicable conditions of use and identify data gaps when no data are found.

Additionally, for conditions of use where no published release data are available, EPA may use a variety of methods including the application of conservative release estimation approaches and assumptions in the Chemical Screening Tool for Exposures and Environmental Releases (ChemSTEER).

3) Review measured or estimated release data for surrogate chemicals that have similar uses and physical-chemical properties.

Data for similar solvents that are used in the same applications, such as 1-bromopropane or perchloroethylene, may be used as surrogate for TCE. EPA will review literature sources identified and if surrogate data are found, EPA will match these data to applicable conditions of use for potentially filling data gaps.

4) Understand and consider regulatory limits that may inform estimation of environmental releases.

EPA has identified information from various EPA statutes (including, for example, regulatory limits, reporting thresholds, or disposal requirements) that may be relevant to release estimation. Some of the information has informed revision of the conceptual models during problem

formulation. EPA will further consider relevant regulatory requirements and their potential impact on environmental releases during risk evaluation.

For example, TCE is a hazardous air pollutant (HAP) regulated under the Clean Air Act (CAA), and both a priority pollutant and toxic pollutant regulated under the Clean Water Act (CWA). EPA has identified several regulations under the CAA and CWA that regulate the release of TCE into the environment, including the National Emission Standards for Hazardous Air Pollutants (NESHAP) for Halogenated Solvent Cleaning (40 CFR Part 63, Subpart T), the NESHAP for the Synthetic Organic Chemical Manufacturing Industry (SOCMI) (40 CFR Part 63, Subparts F, G, H, and I), and the Industrial Effluent Guidelines for Organic Chemicals, Plastics, and Synthetic Fibers (40 CFR Part 414).

5) **Review and determine applicability of Organisation for Economic Co-operation and Development (OECD) Emission Scenario Documents (ESDs) and EPA Generic Scenarios (GS) to the estimation of environmental releases.**

EPA has identified OECD Emission Scenario Documents (ESDs) and EPA Generic Scenarios that correspond to some conditions of use; for example, the ESD on Industrial Use of Industrial Cleaners and the ESD on Industrial Use of Adhesives for Substrate Bonding may be useful. EPA will need to critically review these generic scenarios and ESDs to determine their applicability to the conditions of use assessed. EPA was not able to identify release scenarios corresponding to several conditions of use, including recycling of TCE, commercial carpet cleaning, and as an industrial process solvent. EPA will perform additional targeted research to understand those conditions of use, which may inform identification of release scenarios. EPA may also need to perform targeted research for applicable models and associated parameters that EPA may use to estimate releases for certain conditions of use.

6) **Map or group condition(s) of use to a release assessment scenario(s).**

EPA has identified release scenarios and mapped (i.e., grouped) them to relevant conditions of use as shown in Appendix C. As presented in the fourth column in Table_Apx C-1, EPA has grouped the scenarios into seventeen representative release/exposure scenarios, of which five scenarios will be further analyzed. For example, some scenario groupings include Industrial Batch Cold Cleaning and Industrial Roll Applications of paints/coatings and adhesives/sealants. EPA was not able to identify release scenarios corresponding to several conditions of use (e.g. recycling, commercial carpet cleaning, and use as an industrial process solvent) due generally to a lack of knowledge of those conditions of use. EPA will perform additional targeted research to understand those uses which may inform identification of release scenarios. EPA will group similar conditions of use (based on factors including process equipment and handling, release sources, and usage rates of TCE and formulations containing TCE) into scenario groupings but may further refine these groupings as additional information becomes available during risk evaluation.

7) **Evaluate the weight of evidence for environmental release scenarios.**

EPA will rely on the weight of the scientific evidence when evaluating and integrating environmental release data. The data integration strategy will be designed to be fit-for-purpose in which EPA will use systematic review methods to assemble the relevant data, evaluate the data for quality and relevance, including strengths and limitations, followed by synthesis and

integration of the evidence. Refer to the *Application of Systematic Review in TSCA Risk Evaluations* (U.S. EPA, 2018) document for more information on the general process for data integration.

2.6.1.2 Environmental Fate

EPA expects to consider and analyze fate and transport in environmental media as follows:

1) **Review reasonably available measured or estimated environmental fate endpoint data collected through the literature search.**

   Data on measured concentrations in water will be collected and used along with chemical and physical properties to evaluate exposures in surface water groundwater wastewater treatment systems, landfill leachate and other aqueous systems. Measured data on the chemical behavior of TCE in aqueous systems will be collected via systematic review. When not available chemical and biological fate parameters will be estimated using Estimation Program Interface Suite™ (EPI Suite™), SPARC and other estimation models.

2) **Using measured data and/or modeling, determine the influence of environmental fate endpoints (e.g., persistence, bioaccumulation, partitioning, transport) on exposure pathways and routes of exposure to human and environmental receptors.**

   Measured fate data including volatilization from water, sorption to organic matter in soil and sediments, aqueous and atmospheric photolysis rates, and aerobic and anaerobic biodegradation rates, along with physical-chemical properties and models such as the EPI Suite™ STP model (which estimates removal in wastewater treatment due to adsorption to sludge and volatilization to air) and volatility model (which estimates half-life from volatilization from a model river and model lake), will be used to characterize the movement and persistence of trichloroethylene in environmental media.

3) **Evaluate the weight of the evidence of environmental fate data.**

   EPA will rely on the weight of the scientific evidence when evaluating and integrating environmental fate data. The data integration strategy will be designed to be fit-for-purpose in which EPA will use systematic review methods to assemble the relevant data, evaluate the data for quality and relevance, including strengths and limitations, followed by synthesis and integration of the evidence.

2.6.1.3 Environmental Exposures

EPA expects to consider the following in developing its environmental exposure assessment of trichloroethylene:

1) **Refine and finalize exposure scenarios for environmental receptors by considering unique combinations of sources (use descriptors), exposure pathways, exposure settings, populations exposed, and exposure routes.**

   For trichloroethylene, exposure scenarios for environmental receptors include exposures from surface water.

2) **Review reasonably available environmental and biological monitoring data for environmental exposure to surface water.**

   EPA will rely on databases (see examples below) and literature obtained during systematic review to include ranges and trends of chemical in surface water, including any trends seen in concentrations and spatial trends.
   - STORET and NWIS (USGS/EPS)
   - OPPT monitoring database

3) **Review reasonably available information on releases to determine how modeled estimates of concentrations near industrial point sources compare with available monitoring data.**

   Available exposure models that estimate surface water (e.g. E-FAST) will be evaluated and considered alongside available surface water data to characterize environmental exposures. Modeling approaches to estimate surface water concentrations generally consider the following inputs: direct release into surface water and transport (partitioning within media) and characteristics of the environment (river flow, volume of pond, meteorological data).

4) **Determine applicability of existing additional contextualizing information for any monitored data or modeled estimates during risk evaluation.**

   For example, site/location, time period, and conditions under which monitored data were collected will be evaluated to determine relevance and applicability to wider scenario development. Any studies which relate levels of trichloroethylene in the environment or biota with specific sources or groups of sources will be evaluated.

5) **Evaluate the weight of evidence of environmental occurrence data and modeled estimates.**

   EPA will rely on the weight of the scientific evidence when evaluating and integrating environmental exposure data. The data integration strategy will be designed to be fit-for-purpose in which EPA will use systematic review methods to assemble the relevant data, evaluate the data for quality and relevance, including strengths and limitations, followed by synthesis and integration of the evidence. Refer to the supplemental document, Application of Systematic Review in TSCA Risk Evaluations, for more information on the general process for data evaluation.

2.6.1.4 General Population

EPA does not plan to consider and analyze general population exposures in the risk evaluation for TCE. EPA has determined that the existing regulatory programs and associated analytical processes have addressed or are in the process of addressing potential risks of TCE that may be present in various media pathways (e.g., air, water, land) for the general population. For these cases, EPA believes that the TSCA risk evaluation should focus not on those exposure pathways, but rather on exposure pathways associated with TSCA uses that are not subject to those regulatory processes.

2.6.1.5 Occupational Exposures

EPA will analyze exposures to workers and occupational non-users as follows:

1) **Review reasonably available exposure monitoring data for specific condition(s) of use.**

ED_004056A_00072837-00062

EPA expects to review exposure data including workplace monitoring data collected by government agencies such as the Occupational Safety and Health Administration (OSHA) and the National Institute for Occupational Safety and Health (NIOSH), and monitoring data found in published literature (including both personal exposure monitoring data (direct exposures) and area monitoring data (indirect exposures)). EPA has reviewed available monitoring data collected by OSHA and NIOSH and matched them to applicable conditions of use. EPA has also identified data sources that may contain relevant monitoring data for the various conditions of use. EPA will review these sources (identified in Table_Apx B-5) and other data sources to extract relevant data for consideration and analysis during risk evaluation.

2) **Review reasonably available exposure data for surrogate chemicals that have uses and chemical and physical properties similar to TCE.**

   EPA will review literature sources identified and if surrogate data are found, these data will be matched to applicable conditions of use for potentially filling data gaps. For several conditions of use (e.g., cold cleaning, coating applications, adhesive applications), EPA may consider other similar solvents that share the same conditions of use as possible surrogates for TCE.

3) **For conditions of use where data are limited or not available, review existing exposure models that may be applicable in estimating exposure levels.**

   EPA has identified Emission Scenario Documents (ESDs) from the Organization for Economic Co-operation and Development (OECD) and EPA Generic Scenarios (GS's) corresponding to some conditions of use. For example, the ESD on Industrial Use of Adhesives for Substrate Bonding, the ESD on Metalworking Fluids, and the GS for textile finishing are some of the ESDs and GS's that EPA may use to estimate occupational exposures. EPA will need to critically review these generic scenarios and ESDs to determine their applicability to the conditions of use assessed. EPA was not able to identify ESDs and GSs corresponding to several conditions of use, including manufacture of TCE, use of TCE as an intermediate, recycling of TCE, and commercial carpet cleaning. EPA may conduct industry outreach efforts or perform supplemental, targeted research to understand those conditions of use, which may inform identification of exposure scenarios. EPA will consider inhalation exposure to vapor and mist models in the Chemical Screening Tool for Exposure and Environmental Releases (ChemSTEER) Tool that are routinely used for assessing new chemicals. EPA may also need to perform targeted research to identify applicable models that EPA could use to estimate exposures for certain conditions of use.

4) **Review reasonably available data that may be used in developing, adapting, or applying exposure models to the particular risk evaluation scenario.**

   This step will be performed after Steps #2 and #3 above. Based on information developed from Step #2 and Step #3, EPA will evaluate relevant data to determine whether the data can be used to develop, adapt, or apply models for specific conditions of use (and corresponding exposure scenarios). EPA may utilize existing, peer-reviewed exposure models developed by EPA/OPPT, other government agencies, or available in the scientific literature, or EPA may elect to develop additional models to assess specific condition(s) of use. Inhalation exposure models may be simple box models or two-zone (near-field/far-field) models. In two-zone models, the near-field

ED_004056A_00072837-00063

exposure represents potential inhalation exposures to workers, and the far-field exposure represents potential inhalation exposures to occupational non-users.

As part of the 2014 RA and subsequent Section 6 rulemaking, EPA developed models to assess inhalation exposures to workers and occupational non-users during the use of TCE in spot cleaning, vapor degreasing, and aerosol degreasing. The results of the RA and Section 6 analyses resulted in proposed rules banning the use of TCE in these scenarios. Scenarios previously examined in the 2014 publication will be considered in this risk evaluation to ensure previous assessments are in alignment with the Procedures for Chemical Risk Evaluation under the Amended Toxic Substances Control Act (40 CFR Part 702). During risk evaluation, EPA will evaluate the applicability of the models to other conditions of use and adapt and refine these models as necessary for evaluating exposure to TCE in scenarios not covered by the proposed rules.

EPA will consider the effect of evaporation when evaluating options for dermal exposure assessment. In addition, EPA will consider the impact of occluded exposure or repeated dermal contacts. EPA anticipates that existing EPA/OPPT dermal exposure models would not be suitable for quantifying dermal exposure to highly volatile chemicals such as TCE.

5) **Consider and incorporate applicable engineering controls and/or personal protective equipment into exposure scenarios.**

EPA will review data sources on engineering controls and personal protective equipment as identified in Table_Apx B-6 and to determine their applicability and incorporation into exposure scenarios during risk evaluation. Studies will be evaluated using the evaluation strategies laid out in the *Application of Systematic Review in TSCA Risk Evaluations* (U.S. EPA, 2018).

6) **Evaluate the weight of the evidence of occupational exposure data, which may include qualitative and quantitative sources of information.**

EPA will rely on the weight of the scientific evidence when evaluating and integrating occupational data. The data integration strategy will be designed to be fit-for-purpose in which EPA will use systematic review methods to assemble the relevant data, evaluate the data for quality and relevance, including strengths and limitations, followed by synthesis and integration of the evidence. Refer to the *Application of Systematic Review in TSCA Risk Evaluations* (U.S. EPA, 2018) document for more information on the general process for data evaluation.

7) **Map or group each condition of use to occupational exposure assessment scenario(s).**

EPA has identified occupational exposure scenarios and mapped them to relevant conditions of use as shown in Appendix C. As presented in the fourth column in Table_Apx C-1, EPA has grouped the scenarios into 17 representative release/exposure scenarios, of which five scenarios will be further analyzed. For example, one scenario grouping is the aerosol application of mold release and lubricant products to substrates, where mold release and lubricant products containing TCE are applied to substrates via aerosol cans. EPA was not able to identify occupational exposure scenarios corresponding to several conditions of use due generally to a lack of understanding of those conditions of use. EPA will perform targeted research to

ED_004056A_00072837-00064

understand those uses which may inform identification of occupational exposure scenarios and analyze those uses identified. EPA may refine the mapping/grouping of occupational exposures scenarios based on factors (e.g. process equipment and handling, usage rates of TCE and formulations containing TCE, exposure/release sources) corresponding to conditions of use as additional information is identified during risk evaluation.

2.6.1.6 Consumer Exposures

EPA will analyze consumer exposures as follows:

1) **Review reasonably available consumer product-specific exposure data related to consumer uses/exposures**.

   The availability of TCE concentrations in consumer products will be evaluated. These data provide the source term for any subsequent consumer modeling. Additional product-specific data will be reviewed and considered, including formulation type, application method, percentage of TCE in product, and likely use patterns (e.g., frequency of use, duration of activity, room of use).

2) **Evaluate the weight of the evidence for consumer exposures.**

   EPA will rely on the weight of the scientific evidence when evaluating and integrating data related to consumer exposure. The weight of the evidence may include qualitative and quantitative sources of information. The data integration strategy will be designed to be fit-for-purpose in which EPA will use systematic review methods to assemble the relevant data, evaluate the data for quality and relevance, including strengths and limitations, followed by synthesis and integration of the evidence. Refer to the *Application of Systematic Review in TSCA Risk Evaluations* (U.S. EPA, 2018) document for more information on the general process for data integration.

3) **Review existing exposure models that may be applicable in estimating exposure levels for exposure pathways where data are not available.**

   EPA will review existing consumer exposure models that may be applicable in estimating indoor air concentrations (near field and far field) for the user and bystander, and in estimating dermal exposure to the consumer in transient exposures (e.g., typical consumer activities) and longer term (e.g., occluded) exposure scenarios. Determine the applicability of the identified models for use in a quantitative exposure assessment. Review reasonably available data that may be used in developing, adapting or applying exposure models to the particulars of this risk evaluation.

4) **Review reasonably available data that may be used in developing, adapting or applying exposure models to the particular risk evaluation. For example, existing models developed for a chemical assessment may be applicable to another chemical assessment if model parameter data are available.**

   EPA will review reasonably available empirical data that may be used in developing, adapting or applying exposure models to the exposure assessment of TCE. For example, existing models developed for a chemical assessment may be applicable to another chemical evaluation if model parameter data are available.

ED_004056A_00072837-00065

5) **Review reasonably available consumer product-specific sources to determine how those exposure estimates compare with those reported in monitoring data.**

EPA will evaluate the relative potential and magnitude of exposure routes based on available data. For TCE, inhalation of vapor is expected to result in relatively higher exposure to consumers and bystanders in the home compared with dermal absorption through direct contact and ingestion of mists. The data sources associated with these respective pathways have not been comprehensively evaluated, therefore quantitative comparisons across exposure pathways or in relation to toxicity thresholds are not yet possible.

6) **Review reasonably available population- or subpopulation-specific exposure factors and activity patterns to determine if potentially exposed or susceptible subpopulations need be further refined.**

Based on hazard concerns, certain subpopulations such as pregnant women may be included for any consumer use scenarios, as a user or bystander. Children and/or infants are generally not considered "users," but may be assessed as bystanders of consumer uses in the home. Other subpopulations may be subject to greater exposure, such as DIY users or those in the business of arts and crafts.

Considerations will include:

- Age-specific differences (exposure factors and activity patterns) for populations defined in the exposure scenarios. Exposure factors and activities patterns will be sourced from EPA's 2011 Exposure Factors Handbook.
- Characteristics of the user of the consumer product and the bystander in the room, including for example, women of child bearing age and children.
- Subpopulations that may have greater exposure due to magnitude, frequency or duration of exposure as they apply to specific consumer products.

7) **Map or group each condition of use to consumer exposure assessment scenario(s).**

EPA has identified consumer exposure scenarios that include sources of exposure (i.e., consumer products), exposure pathways, exposure settings, exposure routes, and populations exposed and mapped them to relevant conditions of use, as shown in Appendix C. As presented in the fourth column in Table_Apx D-1, EPA has grouped the scenarios into 141 representative release/exposure scenarios, of which 38 scenarios will be analyzed during risk evaluation. These scenarios are associated with different receptor groups (i.e., consumers and bystanders) and different subcategories of use (e.g., liquid / non-spray applications of penetrating lubricant). EPA may refine the mapping/grouping of consumer exposures scenarios as product use patterns and are further characterized.

EPA will further refine and finalize exposure scenarios for consumers with the following considerations:

- Reasonably available data on consumer products or products available for consumer use including the weight fraction of TCE in products;
- Information characterizing the use patterns of consumer products containing TCE including the following: intended or likely consumer activity, method of application (e.g.,

spray-applied, brush-applied, dip), formulation type, amount of product used, frequency and duration of individual use events, and room or setting of use;

- The associated route of exposure for consumers; and
- Populations who may be exposed to products as users or bystanders in the home, including potentially exposed and susceptible subpopulations such as children or women of child bearing age and subsets of consumers who may use commercially-available products or those who may use products more frequently than typical consumers.

During consumer exposure modeling, these factors determine the resulting exposure route and magnitude. For example, while the product with the highest weight fraction in a given consumer product scenario could be run early on to indicate preliminary levels of exposure, that product may not actually result in the highest potential exposure due to having a lower frequency of use.

2.6.2 Hazards (Effects)

2.6.2.5 Environmental Hazards

EPA will conduct an environmental hazard assessment of TCE as follows:

1) **Review reasonably available environmental hazard data, including data from alternative test methods (e.g., computational toxicology and bioinformatics; high-throughput screening methods; data on categories and read-across; *in vitro* studies).**

   Environmental hazard data will be evaluated using the ecological toxicity data quality criteria outlined in the *Application of Systematic Review in TSCA Risk Evaluations* (U.S. EPA, 2018) document. The study evaluation results will be documented in the risk evaluation phase and data from suitable studies will be extracted and integrated in the risk evaluation process.

   Conduct hazard identification (the qualitative process of identifying acute and chronic endpoints) and concentration-response assessment (the quantitative relationship between hazard and exposure) for all identified environmental hazard endpoints. Suitable environmental hazard data will be reviewed for acute and chronic endpoints for mortality and other effects (e.g. growth, immobility, reproduction, etc.). EPA will evaluate the character of the concentration-response relationship (*i.e.* positive, negative or no response) as part of the review.

   Sufficient environmental hazard studies are available to assess the hazards of environmental concentrations of TCE to aquatic species (i.e. aquatic plants).

2) **Derive aquatic concentrations of concern (COC) for acute and chronic endpoints.**

   The aquatic environmental hazard studies may be used to derive acute and chronic concentrations of concern (COC) for mortality, growth or other endpoints determined to be detrimental to environmental populations. Depending on the robustness of the evaluated data for a particular organism (*e.g.* aquatic plants), environmental hazard values (e.g. ECx/LCx/NOEC/LOEC, etc.) may be derived and used to further understand the hazard characteristics of TCE to aquatic species.

3) **Evaluate the weight of the evidence of environmental hazard data.**

ED_004056A_00072837-00067

EPA will rely on the weight of the scientific evidence when evaluating and integrating environmental hazard data. The data integration strategy will be designed to be fit-for-purpose. EPA will use systematic review methods to assemble the relevant data, evaluate the data for quality and relevance, including strengths and limitations, followed by synthesis and integration of the evidence. Refer to the supplemental document, *Application of Systematic Review in TSCA Risk Evaluations* (U.S. EPA, 2018), for more information on the general process for data evaluation.

4) **Consider the route(s) of exposure, available biomonitoring data and available approaches to integrate exposure and hazard assessments.**

   EPA believes there is sufficient information to evaluate the potential risks to aquatic species (i.e. aquatic plants) from exposures to TCE in surface water.

2.6.2.6 Human Health Hazards

EPA expects to analyze human health hazards as follows:

1) **Review reasonably available human health hazard data, including data from alternative test methods (e.g., computational toxicology and bioinformatics; high-throughput screening methods; data on categories and read-across; *in vitro* studies; systems biology).**

   Human health studies will be evaluated using the evaluation strategies laid out in the *Application of Systematic Review in TSCA Risk Evaluations* (U.S. EPA, 2018). Human, animal and mechanistic data will be identified and included as described in the Population, Exposure, Comparator, and Outcome (PECO) statement for TCE (see Appendix F.4). The protocol describes how studies will be evaluated using specific data evaluation criteria and a predetermined systematic approach. Study results will be extracted and presented in evidence tables by hazard endpoint. For the TCE risk evaluation, EPA will evaluate information in the IRIS assessment (U.S. EPA, 2011c), the final TSCA Work Plan Chemical Risk Assessment of TCE (U.S. EPA, 2014c) and studies published after 2010 that were captured in the comprehensive literature search conducted by the Agency for TCE [*Tricholoroethylene (79-01-6) Bibliography: Supplemental File for the TSCA Scope Document;* (EPA-HQ-OPPT-2016-0737; U.S. EPA, 2017g)] using OPPT's structured process described in the document, *Application of Systematic Review in TSCA Risk Evaluations* (U.S. EPA, 2018). EPA intends to review studies published after the IRIS assessment to ensure that EPA is considering information that has been made available since these assessments were conducted. Evidence for each health outcome will be integrated by synthesizing the lines of human epidemiology and animal experimental evidence. The final TSCA Work Plan Chemical Risk Assessment of TCE (U.S. EPA, 2014c) included an assessment of fetal cardiac malformations. EPA will use the systematic review approach (U.S. EPA, 2018) to re-evaluate key studies in this assessment as well as more recent information on this endpoint. of mechanistic data as part of EPA's reevaluation of key studies. Mechanistic data related to all other endpoints will be identified as "Supplemental Information."

2) **In evaluating reasonably available data, determine whether particular human receptor groups may have greater susceptibility to the chemical's hazard(s) than the general population.**

Reasonably available human health hazard data will be evaluated to ascertain whether some human receptor groups may have greater susceptibility than the general population to TCE hazard(s). Susceptibility of particular human receptor groups to TCE will be determined by evaluating information on factors that influence susceptibility.

3) **Conduct hazard identification (the qualitative process of identifying non-cancer and cancer endpoints) and dose-response assessment (the quantitative relationship between hazard and exposure) for all identified human health hazard endpoints.**

Human health hazards from acute and chronic exposures will be identified by evaluating the human and animal data that meet the systematic review data quality criteria described in the *Application of Systematic Review in TSCA Risk Evaluations* (U.S. EPA, 2018) document. Data quality evaluation will be performed on key studies identified from the Integrated Risk Information System (IRIS) Toxicological Review of TCE (U.S. EPA, 2011c), the final TSCA Work Plan Chemical Risk Assessment of TCE (U.S. EPA, 2014c) and studies published after 2010 that were captured in the comprehensive literature search conducted by the Agency for TCE [*Tricholoroethylene (79-01-6) Bibliography: Supplemental File for the TSCA Scope Document;* (EPA-HQ-OPPT-2016-0737; U.S. EPA, 2017g)]. Hazards identified by studies meeting data quality criteria will be grouped by routes of exposure relevant to humans (oral, dermal, inhalation) and by cancer and noncancer endpoints.

Dose-response assessment will be performed in accordance with EPA guidance (U.S. EPA, 2011b, 1994). Dose-response analyses performed for the U.S. EPA (2011c) IRIS oral and inhalation reference dose determinations may be used if the data meet data quality criteria and if additional information on the identified hazard endpoints are not available or would not alter the analysis.

The cancer mode of action (MOA) determines how cancer risks can be quantitatively evaluated. EPA will evaluate information on genotoxicity and the mode of action for all cancer endpoints to determine the appropriate approach for quantitative cancer assessment in accordance with the U.S. EPA Guidelines for Carcinogen Risk Assessment (U.S. EPA, 2005).

4) **Derive points of departure (PODs) where appropriate; conduct benchmark dose modeling depending on the available data. Adjust the PODs as appropriate to conform (e.g., adjust for duration of exposure) to the specific exposure scenarios evaluated.**

Hazard data will be evaluated to determine the type of dose-response modeling that is applicable. Where modeling is feasible, a set of dose-response models that are consistent with a variety of potentially underlying biological processes will be applied to empirically model the dose-response relationships in the range of the observed data consistent with the EPA *Benchmark Dose Technical Guidance Document.* Where dose-response modeling is not feasible, no-observed-adverse-effect-levels (NOAELs) or lowest-observed-adverse-effect-levels (LOAELs) will be identified. Non-quantitative data will also be evaluated for contribution to weight of evidence or for evaluation of qualitative endpoints that are not appropriate for dose-response assessment.

EPA will evaluate whether the available physiologically-based pharmacokinetic (PBPK) and empirical kinetic models are adequate for route-to-route and interspecies extrapolation of the POD, or for extrapolation of the POD to standard exposure durations (e.g., lifetime continuous

ED_004056A_00072837-00069

exposure). If application of the PBPK model is not possible, oral PODs may be adjusted by body weight$^{3/4}$ ($BW^{3/4}$) scaling in accordance with (U.S. EPA, 2011b), and inhalation PODs may be adjusted by exposure duration and chemical properties in accordance with (U.S. EPA, 1994).

5) **Evaluate the weight of the evidence for human health hazards.**

   EPA will rely on the weight of the scientific evidence when evaluating and integrating human health hazard data. The data integration strategy will be designed to be fit-for-purpose in which EPA will use systematic review methods to assemble the relevant data, evaluate the data for quality and relevance, including strengths and including strengths and limitations, followed by synthesis and integration of the evidence. Refer to the *Application of Systematic Review in TSCA Risk Evaluations* (U.S. EPA, 2018) document for more information on the general process for data evaluation.

6) **Consider the route(s) of exposure (oral, inhalation, dermal), available route-to-route extrapolation approaches, available biomonitoring data and available approaches to correlate internal and external exposures to integrate exposure and hazard assessment.**

   EPA believes there will be sufficient data to conduct dose-response analysis and/or benchmark dose modeling for both inhalation and oral routes of exposure.

   If sufficient dermal toxicity studies are not identified in the literature search to assess risks from dermal exposures, then a route-to-route extrapolation from the inhalation and oral toxicity studies would be needed to assess systemic risks from dermal exposures. Without an adequate PBPK model for the dermal route of exposure, the approaches described in the EPA guidance document *Risk Assessment Guidance for Superfund Volume I: Human Health Evaluation Manual (Part E, Supplemental Guidance for Dermal Risk Assessment)* could be applied. These approaches may be able to further inform the relative importance of dermal exposures compared with other routes of exposure.

2.6.3 Risk Characterization

Risk characterization is an integral component of the risk assessment process for both ecological and human health risks. EPA will derive the risk characterization in accordance with EPA's *Risk Characterization Handbook* (U.S. EPA, 2000). As defined in EPA's *Risk Characterization Policy*, "the risk characterization integrates information from the preceding components of the risk evaluation and synthesizes an overall conclusion about risk that is complete, informative and useful for decision makers." Risk characterization is considered to be a conscious and deliberate process to bring all important considerations about risk, not only the likelihood of the risk but also the strengths and limitations of the assessment, and a description of how others have assessed the risk into an integrated picture.

Risk characterization at EPA assumes different levels of complexity depending on the nature of the risk assessment being characterized. The level of information contained in each risk characterization varies according to the type of assessment for which the characterization is written. Regardless of the level of complexity or information, the risk characterization for TSCA risk evaluations will be prepared in a manner that is transparent, clear, consistent, and reasonable (TCCR) (U.S. EPA, 2000). EPA will also present information in this section consistent with approaches described in the Procedures for Chemical Risk Evaluation Under the Amended Toxic Substances Control Act Risk Evaluation Framework Rule

ED_004056A_00072837-00070

(82 FR 33726). For instance, in the risk characterization summary, EPA will further carry out the obligations under TSCA section 26; for example, by identifying and assessing uncertainty and variability in each step of the risk evaluation, discussing considerations of data quality such as the reliability, relevance and whether the methods utilized were reasonable and consistent, explaining any assumptions used, and discussing information generated from independent peer review. EPA will also be guided by EPA's Information Quality Guidelines (U.S. EPA, 2002) as it provides guidance for presenting risk information. Consistent with those guidelines, in the risk characterization, EPA will also identify: (1) Each population addressed by an estimate of applicable risk effects; (2) the expected risk or central estimate of risk for the potentially exposed or susceptible subpopulations affected; (3) each appropriate upper-bound or lower bound estimate of risk; (4) each significant uncertainty identified in the process of the assessment of risk effects and the studies that would assist in resolving the uncertainty; and (5) peer reviewed studies known to the Agency that support, are directly relevant to, or fail to support any estimate of risk effects and the methodology used to reconcile inconsistencies in the scientific information.

ED_004056A_00072837-00071

REFERENCES

Abernethy, SB, A. M. Shiu, W. Y. Wells, P. G. Mackay, D. (1986). ACUTE LETHAL TOXICITY OF HYDROCARBONS AND CHLORINATED HYDROCARBONS TO TWO PLANKTONIC CRUSTACEANS THE KEY ROLE OF ORGANISM-WATER PARTITIONING. Aquat Toxicol AMST: 163-174.

ACGIH (American Conference of Governmental Industrial Hygienists). (2010). 2010 TLVs and BEIs: Based on the documentation of the threshold limit values for chemical substances and physical agents and biological exposure indices [TLV/BEI]. Cincinnati, OH. http://www.acgih.org/tlv/

Alexander, HCM, W. M. Bartlett, E. A. (1978). Toxicity of perchloroethylene, trichloroethylene, 1,1,1-trichloroethane, and methylene chloride to fathead minnows. Bull Environ Contam Toxicol 20: 344-352. http://dx.doi.org/10.1007/BF01683531

ATSDR (Agency for Toxic Substances and Disease Registry). (2014a). Draft toxicological profile for trichloroethylene. https://www.atsdr.cdc.gov/toxprofiles/tp19.pdf

ATSDR. (2014b). Public health assessment: Technitronics site: Casselberry, Seminole County, Florida: FDEP facility ID: COM_275450: EPA facility ID: FLD007432552. Atlanta, GA. http://www.floridahealth.gov/environmental-health/hazardous-waste-sites/_documents/t/technitronics102114.pdf

ATSDR. (2017). Public health assessment: Paducah gaseous diffusion plant (U.S. DOE), Paducah, McCracken County, KY. Atlanta, GA: U.S. Department of Health and Human Services, Agency for Toxic Substances and Disease Registry. https://www.atsdr.cdc.gov/hac/pha/pha.asp?docid=792&pg=7

Ballhorn, LF, D. Geyer, H. Quast, I. (1984). Uberprufung der Durchfuhrbarkeit von Prufungsvorschriften und der Aussagekraft der Stufe I und II des E. Chem. G. (OECDG Data File).

Barret, L; Faure, J; Guilland, B; Chomat, D; Didier, B; Debru, J. (1984). Trichloroethylene occupational exposure: Elements for better prevention. Int Arch Occup Environ Health 53: 283-289. http://dx.doi.org/10.1007/BF00380666

Baumann, A; Page, E; Mueller, C; Burr, G; Hitchcock, E. (2008a). Evaluation of Neurological Dysfunction among Workers Exposed to Trichloroethylene. (NTIS/01330099_a). Baumann, A; Page, E; Mueller, C; Burr, G; Hitchcock, E.

Baumann, A; Page, E; Mueller, C; Burr, G; Hitchcok, E. (2008b). Health hazard evaluation report no. HETA 2004-0372-3054, Evaluation of neurological dysfunction among workers exposed to trichloroethylene, Entek International, Lebanon, Oregon. (HETA 2004-0372-3054). Cincinnati, OH: National Institute for Occupational Safety and Health.

Bloemen, L; Monster, A; Kezic, S; Commandeur, J; Veulemans, H; Vermeulen, N; Wilmer, J. (2001). Study on the cytochrome P-450- and glutathione-dependent biotransformation of trichloroethylene in humans. Int Arch Occup Environ Health 74: 102-108. http://dx.doi.org/10.1007/s004200000198

Bloom, TF; Kramkowski, RS; Cromer, JW. (1974). Health hazard evaluation report no. HHE 73-151-141, Essex Wire Corporation, Kenton, Ohio. (HHE 73-151-141). Cincinnati, OH: National Institute for Occupational Safety and Health.

Burr, G. (2003). Health hazard evaluation report no. HETA 2002-0184-2888, Aero-Classics, Ltd., Huron, Ohio. (HETA 2002-0184-2888). Cincinnati, OH: National Institute for Occupational Safety and Health.

Burroughs, GE. (1980a). Health hazard evaluation report no. HHE 79-96-729, Protective Coatings Corporation, Fort Wayne, Indiana. (HHE 79-96-729). Cincinnati, OH: National Institute for Occupational Safety and Health.

Burroughs, GE. (1980b). Health hazard evaluation report no. HHE 79-96-729, Protective Coatings Corporation, Fort Wayne, Indiana, Part 2. (HHE 79-96-729). Cincinnati, OH: National Institute for Occupational Safety and Health.

Burton, NC; Edmonds, MA; Decker, JA; Kovein, RJ. (1992). Health hazard evaluation report no. HETA 92-044-2265, General Castings CO. Liberty Road Facility , Delaware, Ohio. (HETA 92-044-2265). Cincinnati, OH: National Institute for Occupational Safety and Health.

Burton, NC; Monesterskey, J. (1996). Health hazard evaluation report no. HETA 96-0135-2612, Eagle Knitting Mills, Inc., Shawano, Wisconsin. (HETA 96-0135-2612). Cincinnati, OH: National Institute for Occupational Safety and Health.

CalEPA. (2005). Appendix D.3 Chronic RELS and toxicity summaries using the previous version of Hot Spots Risk Assessment guidelines (OEHHA 1999). Sacramento, CA: Office of Environmental Health Hazard Assessment. https://oehha.ca.gov/media/downloads/crnr/appendixd3final.pdf

CalEPA. (2009). Public health goals for chemicals in drinking water: Trichloroethylene. Sacramento, CA. https://oehha.ca.gov/media/downloads/water/chemicals/phg/tcephg070909_0.pdf

CalEPA. (2015). Non-cancer toxicity of carcinogenic chemicals as a risk driver for toxic waste site cleanup decisions.

CDC. (1978). Health hazard evaluation report no. HETA-78-38-512: Trans World Airlines Corporation. Cincinnati, OH: National Institute for Occupational Safety and Health. https://www.cdc.gov/niosh/hhe/reports/pdfs/78-38-512.pdf

Chemistry Industry Association of Canada. (2017). All substances emissions for 2011 and projections for 2014. Ottawa, Canada. http://canadianchemistry.ca/library/docs/Total%20Emissions%202011%20with%20issues-Final%20Eng.pdf

Chia, SE; Goh, VH; Ong, CN. (1997). Endocrine profiles of male workers with exposure to trichloroethylene. Am J Ind Med 32: 217-222. http://dx.doi.org/10.1002/(SICI)1097-0274(199709)32:3<217::AID-AJIM6>3.0.CO;2-U

Chimcomplex SA Borzesti. (2014). Analysis of alternatives: Industrial use of trichloroethylene (TCE) as a solvent as a degreasing agent in closed systems. Helsinki, Finland: European Chemicals Agency. https://echa.europa.eu/documents/10162/f10c4a75-6f0d-4eb9-b6bd-79b44c6df2f7

Chrostek, WJ, ; Levine, M. S. (1981). Health hazard evaluation report no. HHE 30-153-881, Palmer Industrial Coatings Incorp., Williamsport, Pennsylvania. (HHE 30-153-881). Cincinnati, OH: National Institute for Occupational Safety and Health.

Cohen, C; Frank, AL. (1994). Liver disease following occupational exposure to 1,1,1-trichloroethane: a case report. Am J Ind Med 26: 237-241.

Colman lerner, JE; Sanchez, EY; Sambeth, J; Porta, A. (2012). Characterization and health risk assessment of VOCs in occupational environments in Buenos Aires, Argentina. Atmos Environ 55: 440-447. http://dx.doi.org/10.1016/j.atmosenv.2012.03.041

Crandall, MS; Albrecht, WN. (1989). Health Hazard Evaluation Report No. HETA-86-380-1957, York International Corporation, Madisonville, Kentucky (pp. 86-380). (NIOSH/00189611). Crandall, MS; Albrecht, WN.

Crandall, MS; Galson, S; Hartle, RW. (1988). Health hazard evaluation report no. HETA 87-095-1927, G & L Recovery Systems, Incorporated, Ashtabula, Ohio. (HETA 87-095-1927). Cincinnati, OH: National Institute for Occupational Safety and Health.

CT DOH. (2014). Maximum contaminant level (MCL) determination for trichloroethylene. Hartford, CT: Environmental and Occupational Health Assessment Program. http://www.ct.gov/dph/lib/dph/environmental_health/eoha/pdf/032415_tce_mcl_december_2014a.pdf

CT DPH. (2015). Health alert: trichloroethylene (TCE) and reproductive risk. Hartford, CT. http://www.ct.gov/dph/lib/dph/environmental_health/eoha/pdf/012616_tce_health_alert.pdf

Daniels, W; Orris, P; Kramkowski, R; Almaguer, D. (1988a). Health hazard evaluation report no. HETA 86-121-1923, Modern plating Corporation, Freeport, Illinois. (HETA 86-121-1923). Cincinnati, OH: National Institute for Occupational Safety and Health.

Daniels, WJ; Orris, P; Kramkowski, R; Almaguer, D. (1988b). Health Hazard Evaluation Report No. HETA-86-121-1923, Modern Plating Corporation, Freeport, Illinois (pp. 86-121). (NIOSH/00184446). Daniels, WJ; Orris, P; Kramkowski, R; Almaguer, D.

Daubert, TE; Danner, RP. (1989). Physical and thermodynamic properties of pure chemicals: Data compilation. Washington, DC: Taylor & Francis.

Dietz, AC; Schnoor, JL. (2001). Phytotoxicity of chlorinated aliphatics to hybrid poplar (Populus deltoides x nigra DN34). Environ Toxicol Chem 20: 389-393. http://dx.doi.org/10.1897/1551-5028(2001)020<0389:POCATH>2.0.CO;2

Dobaradaran, S; Mahvi, AH; Nabizadeh, R; Mesdaghinia, A; Naddafi, K; Yunesian, M; Rastkari, N; Nazmara, S. (2010). Hazardous Organic Compounds in Groundwater Near Tehran Automobile Industry. Bull Environ Contam Toxicol 85: 530-533. http://dx.doi.org/10.1007/s00128-010-0131-9

Doherty, RE. (2000a). A history of the production and use of carbon tetrachloride, tetrachloroethylene, trichloroethylene and 1,1,1-trichloroethane in the United States: Part 1—historical background; carbon tetrachloride and tetrachloroethylene. Environ Forensics 1: 69-81. http://dx.doi.org/10.1006/enfo.2000.0010

Doherty, RE. (2000b). A history of the production and use of carbon tetrachloride, tetrachloroethylene, trichloroethylene and 1,1,1-trichloroethane in the United States: Part 2 - Trichloroethylene and 1,1,1-trichloroethane. Environ Forensics 1: 83-93. http://dx.doi.org/10.1006/enfo.2000.0011

DOMO Caproleuna GmbH. (2015). Chemical safety report: Industrial use as an extractive solvent for the purification of caprolactam from caprolactam oil. Ispra, Italy: European Commission Joint Research Centre, Institute for Health and Consumer Protection, European Chemicals Bureau. http://ec.europa.eu/DocsRoom/documents/14368/attachments/1/translations/en/renditions/pdf

DOW Deutschland. (2014a). Chemical safety report: Industrial use as process chemical (enclosed systems) in Alcantara material production. Ispra, Italy: European Commission Joint Research Centre, Institute for Health and Consumer Protection, European Chemicals Bureau. http://ec.europa.eu/DocsRoom/documents/14370/attachments/1/translations/en/renditions/native

DOW Deutschland. (2014b). Chemical safety report: Use of trichloroethylene in industrial parts cleaning by vapour degreasing in closed systems where specific requirements (system of use-parameters) exist. Ispra, Italy: European Commission Joint Research Centre, Institute for Health and Consumer Protection, European Chemicals Bureau. http://ec.europa.eu/DocsRoom/documents/14369/attachments/1/translations/en/renditions/native

DOW Deutschland. (2014c). Chemical safety report: Use of trichloroethylene in packaging. Ispra, Italy: European Commission Joint Research Centre, Institute for Health and Consumer Protection, European Chemicals Bureau. http://ec.europa.eu/DocsRoom/documents/14371/attachments/1/translations/en/renditions/native

DOW Deutschland. (2017). Chemical safety report: Use of trichloroethylene as extraction solvent for bitumen in asphalt analysis. Ispra, Italy: European Commission Joint Research Centre, Institute for Health and Consumer Protection, European Chemicals Bureau. http://ec.europa.eu/DocsRoom/documents/14373/attachments/1/translations/en/renditions/native

Driscoll, T; Hamdan, H; Wang, G; Wright, P; Stacey, N. (1992). Concentrations of individual serum or plasma bile acids in workers exposed to chlorinated aliphatic hydrocarbons. Br J Ind Med 49: 700-705.

Durkee, J. (2014). Cleaning with Solvents: Methods and Machinery. Oxford, UK: Elsevier Inc.

EC (European Commission). (2000). IUCLID Dataset for trichloroethylene. European Chemical Substances Information System (ESIS). European Commission, Joint Research Centre. Institute

for Health and Consumer Protection (IHCP), European Chemicals Bureau. http://esis.jrc.ec.europa.eu/doc/IUCLID/data_sheets/79016.pdf

EC (European Commission). (2004). European Union Risk Assessment Report: Trichloroethylene. Cas No: 79-01-6. EINECS No: 201-167-4. 1st Priority List, Vol. 31 (pp. 1-348). (EUR 21057 EN). European Commission, Joint Research Center. Institute for Health and Consumer Protection, European Chemicals Bureau. https://echa.europa.eu/documents/10162/83f0c99f-f687-4cdf-a64b-514f1e26fdc0

EC (European Commission). (2009). Recommendation from the scientific committee on occupational exposure limits for trichloroethylene. Brussels, Belgium. http://ec.europa.eu/social/BlobServlet?docId=6405&langId=en

EC (European Commission). (2014a). Chemical safety report: Trichloroethylene. Ispra, Italy: European Commission Joint Research Centre, Institute for Health and Consumer Protection, European Chemicals Bureau. http://ec.europa.eu/DocsRoom/documents/12345/attachments/1/translations/en/renditions/native

EC (European Commission). (2014b). Exposure assessment: Trichloroethylene. Ispra, Italy: European Commission Joint Research Centre, Institute for Health and Consumer Protection, European Chemicals Bureau. http://ec.europa.eu/DocsRoom/documents/10790/attachments/1/translations/en/renditions/native

EC (European Commission). (2014c). Exposure assessment: Trichloroethylene, Part 2. Ispra, Italy: European Commission Joint Research Centre, Institute for Health and Consumer Protection, European Chemicals Bureau. http://ec.europa.eu/DocsRoom/documents/10792/attachments/1/translations/en/renditions/native

EC (European Commission). (2014d). Exposure assessment: Trichloroethylene, Part 3. Ispra, Italy: European Commission Joint Research Centre, Institute for Health and Consumer Protection, European Chemicals Bureau. http://ec.europa.eu/DocsRoom/documents/10926/attachments/1/translations/en/renditions/native

EC (European Commission). (2014e). Exposure scenario: Use: Trichloroethylene as an extraction solvent for removal of process oil and formation of the porous structure in polyethylene based separators used in lead-acid batteries. Ispra, Italy: European Commission Joint Research Centre, Institute for Health and Consumer Protection, European Chemicals Bureau. http://ec.europa.eu/DocsRoom/documents/12344/attachments/1/translations/en/renditions/native

ECB (European Chemicals Bureau). (2004). European Union risk assessment report: Trichloroethylene. (EUR 21057 EN). European Commission. https://echa.europa.eu/documents/10162/83f0c99f-f687-4cdf-a64b-514f1e26fdc0

ECHA (European Chemicals Agency). (2004). Summary risk assessment report: Trichloroethylene. (I.04.29). Ispra, Italy: European Commission Joint Research Centre, Institute for Health and Consumer Protection, European Chemicals Bureau. https://echa.europa.eu/documents/10162/d30e53cc-89e7-4d1c-89c0-7ec216f84d48

ECHA (European Chemicals Agency). (2017a). Registration dossier trichloroethylene. https://echa.europa.eu/el/registration-dossier/-/registered-dossier/14485

ECHA (European Chemicals Agency). (2017b). Uses at industrial sites: Trichloroethylene. Helsinki, Finland. Retrieved from https://echa.europa.eu/registration-dossier/-/registered-dossier/14485/3/1/4#

ECSA. (2015). Product safety summary on trichloroethylene. Brussels, Belgium. http://www.chlorinated-solvents.eu/images/Documents/Publications/2015/Product-Safety_Summary_2015/PSS%20TRI%20December%202015.pdf

ECSA. (2017). Chlorinated solvents: Trichloroethylene (TRI). Brussels, Belgium. http://www.chlorinated-solvents.eu/index.php/about-chlorinated-solvents/trichloroethylene-tri

Elsheikh, MY; Bertelo, CA; Dolbier, WR. (2005). Kirk-Othmer Encyclopedia of Chemical Technology Hydrofluorocarbons. Hoboken, NJ: John Wiley & Sons, Inc.
ENTEK International Limited. (2014). Analysis of alternatives: Use of trichloroethylene as an extraction solvent for removal of process oil and formation of the porous structure in polyethylene based separators used in lead-acid batteries. Helsinki, Finland: European Chemicals Agency. https://echa.europa.eu/documents/10162/9a728963-e57f-48de-b977-7d05462c43e9
Environment Canada, Health Canada, . (1993). Canadian Environmental protection act priority substances list assessment report trichloroethylene. Ottawa Canada.
ERM. (2017). Life cycle assessment of used oil management. London, UK. http://www.api.org/~/media/Files/Certification/Engine-Oil-Diesel/Publications/LCA-of-Used-Oil-Mgmt-ERM-10012017.pdf
European Chlorinated Solvents Association (ECSA). (2016). Guidance on storage and handling of chlorinated solvents. http://www.chlorinated-solvents.eu/images/Documents/Publications/2016/StorageandHandling/ECSA%20Guidance%20on%20Storage%20and%20handling%20of%20chlorinated%20solvents.pdf
Fannick, N. (1979). Health hazard evaluation report no. HHE 79-18-627, Standard Folding Cartons, Inc., Jackson Heights, New York. (HHE 79-18-627). Cincinnati, OH: National Institute for Occupational Safety and Health.
Feistritz Microporous gmbh. (2014). Chemical safety report: Trichloroethylene used as degreasing solvent in the manufacture of polyethylene separators for lead-acid batteries. Ispra, Italy: European Commission Joint Research Centre, Institute for Health and Consumer Protection, European Chemicals Bureau. http://ec.europa.eu/DocsRoom/documents/14367/attachments/1/translations/en/renditions/native
Finely, M; Page, E. (2005). Health hazard evaluation report no. HETA 2003-0203-2952, Wallace Computer Services, Clinton, Illinois. (HETA 2003-0203-2952). Cincinnati, OH: National Institute for Occupational Safety and Health.
Finely, M; Tapp, L. (2004). Health hazard evaluation report no. HETA 2003-0029-2923, Ward Brodt Music Mall, Madison, Wisconsin. (HETA 2003-0029-2923). Cincinnati, OH: National Institute for Occupational Safety and Health.
FL DOH. (1996). Site review and update: Piper aircraft corporation. Tallahassee, FL. http://www.floridahealth.gov/environmental-health/hazardous-waste-sites/_documents/p/piperupdate030696.pdf
Fleming, DA; Woskie, SR; Jones, JH; Silver, SR; Luo, L; Bertke, SJ. (2014). Retrospective Assessment of Exposure to Chemicals for a Microelectronics and Business Machine Manufacturing Facility. J Occup Environ Hyg 11: 292-305. http://dx.doi.org/10.1080/15459624.2013.862591
Fort, DR, R. Stover, E. Finch, R. (2001). Optimization of an exogenous metabolic activation system for FETAX. I. Post-isolation rat liver microsome mixtures. Drug Chem Toxicol 24: 103-115. http://dx.doi.org/10.1081/DCT-100102604
Franco, A; Costoya, MA; Roca, E. (2007). Estimating risk during showering exposure to VOCs of workers in a metal-degreasing facility. J Toxicol Environ Health A 70: 627-637. http://dx.doi.org/10.1080/15287390600974551
Friesen, MC; Locke, SJ; Chen, YC; Coble, JB; Stewart, PA; Ji, BT; Bassig, B; Lu, W; Xue, S; Chow, WH; Lan, Q; Purdue, MP; Rothman, N; Vermeulen, R. (2015). Historical occupational trichloroethylene air concentrations based on inspection measurements from shanghai, china. Ann Occup Hyg 59: 62-78. http://dx.doi.org/10.1093/annhyg/meu066
Fuller, ME; Scow, KM; Lau, S; Ferris, H. (1997). Trichloroethylene (TCE) and toluene effects on the structure and function of the soil community. Soil Biol Biochem 29: 75-89.
Geiss, R. (2014a). Chemical safety report: Use of trichloroethylene in formulation. Ispra, Italy: European Commission Joint Research Centre, Institute for Health and Consumer Protection,

European Chemicals Bureau.
http://ec.europa.eu/DocsRoom/documents/12342/attachments/1/translations/en/renditions/native
Geiss, R. (2014b). Chemical safety report: Use of trichloroethylene in packaging. Ispra, Italy: European Commission Joint Research Centre, Institute for Health and Consumer Protection, European Chemicals Bureau.
http://ec.europa.eu/DocsRoom/documents/12343/attachments/1/translations/en/renditions/native
Gilles, D; Anania, TL; Ilka, R. (1977). Health hazard evaluation report no. HHE 77-12-418, Airtex Products, Fairfield, Illinois. (HHE 77-12-418). Cincinnati, OH: National Institute for Occupational Safety and Health.
Gilles, D; Philbin, E. (1976). Health hazard evaluation report no. HHE 76-61-337, TRW Incorporated, Philadelphia, Pennsylvania. (HHE 76-61-337). Cincinnati, OH: National Institute for Occupational Safety and Health.
Goh, VH; Chia, SE; Ong, CN. (1998). Effects of chronic exposure to low doses of trichloroethylene on steroid hormone and insulin levels in normal men. Environ Health Perspect 106: 41-44.
Gunter, BJ. (1977). Health hazard evaluation report no. HHE 76-101-376, FMC Corporation, Broomfield, Colorado. (HHE 76-101-376). Cincinnati, OH: National Institute for Occupational Safety and Health.
Gunter, BJ; Lucas, JB. (1975). Health hazard evaluation report no. HHE 74-61-232, Gates Rubber Company, Denver Colorodo. (HHE 74-61-232). Cincinnati, OH: National Institute for Occupational Safety and Health.
Hansen, J; Raaschou-Nielsen, O; Christensen, JM; Johansen, I; Mclaughlin, JK; Lipworth, L; Blot, WJ; Olsen, JH. (2001). Cancer incidence among Danish workers exposed to trichloroethylene. J Occup Environ Med 43: 133-139.
Hein, MJ; Waters, MA; Ruder, AM; Stenzel, MR; Blair, A; Stewart, PA. (2010). Statistical modeling of occupational chlorinated solvent exposures for case-control studies using a literature-based database. Ann Occup Hyg 54: 459-472. http://dx.doi.org/10.1093/annhyg/meq027
Hellweg, S; Demou, E; Scheringer, M; Mckone, TE; Hungerbuhler, K. (2005). Confronting workplace exposure to chemicals with LCA: examples of trichloroethylene and perchloroethylene in metal degreasing and dry cleaning. Environ Sci Technol 39: 7741-7748.
http://dx.doi.org/10.1021/es047944z
Hoffmann, P. (1987). CARDIOTOXICITY TESTING OF ORGANIC SOLVENTS BY CORONARY ARTERY LIGATION IN CLOSED-CHEST RATS. Arch Toxicol 61: 79-82.
Horvath, AL; Getzen, FW; Maczynska, Z. (1999). IUPAC-NIST Solubility data series 67: Halogenated ethanes and ethenes with water. J Phys Chem Ref Data 28: 395-627.
http://dx.doi.org/10.1063/1.556039
Hrelia, P; Maffei, F; Vigagni, F; Fimognari, C; Flori, P; Stanzani, R; Forti, GC. (1994). Interactive effects between trichloroethylene and pesticides at metabolic and genetic level in mice. Environ Health Perspect 102: 31-34.
HSIA. (2008). Chlorinated solvents - The key to surface cleaning performance.
http://www.hsia.org/applications/vd%20brochure.pdf
HSIA. (2013). TSCA work plan chemicals program.
http://www.hsia.org/news/TCE%20Workplan%20Comments.pdf
IARC (International Agency for Research on Cancer). (1995). Dry cleaning, some chlorinated solvents and other industrial chemicals: Summary of data reported and evaluation. In IARC Monographs on the Evaluation of Carcinogenic Risks to Humans. Lyon, France.
Iavicoli, I; Marinaccio, A; Carelli, G. (2005). Effects of occupational trichloroethylene exposure on cytokine levels in workers. J Occup Environ Med 47: 453-457.
http://dx.doi.org/10.1097/01.jom.0000161728.23285.66

Ikeda, M. (1977). Metabolism of trichloroethylene and tetrachloroethylene in human subjects. Environ Health Perspect 21: 239-245. http://dx.doi.org/10.1289/ehp.7721239
Ikeda, M; Ohtsuji, H; Imamura, T; Komoike, Y. (1972). Urinary excretion of total trichloro-compounds, trichloroethanol, and trichloroacetic acid as a measure of exposure to trichloroethylene and tetrachloroethylene. Br J Ind Med 29: 328-333. http://dx.doi.org/10.1136/oem.29.3.328
Ikeda, M; Otsuji, H; Kawai, H; Kuniyoshi, M. (1971). Excretion kinetics of urinary metabolites in a patient addicted to trichloroethylene. Br J Ind Med 28: 203-206.
Imbriani, M; Niu, Q; Negri, S; Ghittori, S. (2001). Trichloroethylene in urine as biological exposure index. Ind Health 39: 225-230. http://dx.doi.org/10.2486/indhealth.39.225
Inoue, O; Seiji, K; Kawai, T; Jin, C; Liu, YT; Chen, Z; Cai, SX; Yin, SN; Li, GL; Nakasutka, H; Watanabe, T; Ikeda, M. (1989). Relationship between vapor exposure and urinary metabolite excretion among workers exposed to trichloroethylene. Am J Ind Med 15: 103-110.
Japanese Ministry of Environment. (2004a). Manual for PRTR release estimation models: 1. Examples of calculation in typical processes. Tokyo, Japan: Ministry of Economy, Trade and Industry. https://www.env.go.jp/en/chemi/prtr/manual/pdf/mat03-3.pdf
Japanese Ministry of Environment. (2004b). Manual for PRTR release estimation models: Part II materials (pp. 246-291). Tokyo, Japan: Ministry of Economy, Trade, and Industry. https://www.env.go.jp/en/chemi/prtr/manual/pdf/mat03-10.pdf
Jiun-Horng, T; Kuo-Hsiung, L; Chih-Yu, C; Nina, L; Sen-Yi, M; Hung-Lung, C. (2008). Volatile organic compound constituents from an integrated iron and steel facility. J Hazard Mater 157: 569-578. http://dx.doi.org/10.1016/j.jhazmat.2008.01.022
Johnson, P. (1980). Health hazard evaluation report no. HHE 80-48-689, Miami Carey Inc., Monroe, Ohio. (HHE 80-48-689). Cincinnati, OH: National Institute for Occupational Safety and Health.
Jones, RM; Dell, L; Torres, C; Simmons, CE; Poole, J; Boelter, FW; Harper, P. (2015). Exposure Reconstruction and Risk Analysis for Six Semiconductor Workers With Lymphohematopoietic Cancers. J Occup Environ Med 57: 649-658. http://dx.doi.org/10.1097/JOM.0000000000000413
Kamijima, M; Wang, H; Huang, H; Li, L; Shibata, E; Lin, B; Sakai, K; Liu, H; Tsuchiyama, F; Chen, J; Okamura, A; Huang, X; Hisanaga, N; Huang, Z; Ito, Y; Takeuchi, Y; Nakajima, T. (2008). Trichloroethylene causes generalized hypersensitivity skin disorders complicated by hepatitis. J Occup Health 50: 328-338.
Kanegsberg, B; Kanegsberg, E. (2011). Handbook for critical cleaning, cleaning agents and systems (2nd ed.). Boca Raton, FL: CRC Press.
Kargar, M; Nadafi, K; Nabizadeh, R; Nasseri, S; Mesdaghinia, A; Mahvi, AH; Alimohammadi, M; Nazmara, S; Rastkari, N. (2013). Survey of Hazardous Organic Compounds in the Groundwater, Air and Wastewater Effluents Near the Tehran Automobile Industry. Bull Environ Contam Toxicol 90: 155-159. http://dx.doi.org/10.1007/s00128-012-0890-6
Kilburn, KH. (1999). Neurobehavioral and respiratory findings in jet engine repair workers: a comparison of exposed and unexposed volunteers. Environ Res 80: 244-252. http://dx.doi.org/10.1006/enrs.1998.3898
Kim, J; Park, H; Ha, E; Jung, T; Paik, N; Yang, S. (2005). Combined effects of noise and mixed solvents exposure on the hearing function among workers in the aviation industry. Ind Health 43: 567-573. http://dx.doi.org/10.2486/indhealth.43.567
Kinnes, GM. (1998). Health hazard evaluation report no. HETA 97-0214-2689, Dorma Door Controls, Inc., Reamstown Pennsylvania. (HETA 97-0214-2689). Cincinnati, OH: National Institute for Occupational Safety and Health.
Kinnes, GM; Hammel, RR. (1990). Health hazard evaluation report no. HETA 88-357-2042, A. W Cash Valve Manufacturing Corp., Decatur, Illinois. (HETA 88-357-2042). Cincinnati, OH: National Institute for Occupational Safety and Health.

Kominsky, JR. (1976a). Health Hazard Evaluation Determination, Report number 76-24-350, Dana Corporation, Tipton, Indiana. (NIOSH-TR-HHE-76-24-350). Cincinnati, OH: National Institute for Occupational Safety and Health. https://ntrl.ntis.gov/NTRL/dashboard/searchResults.xhtml?searchQuery=PB273716

Kominsky, JR. (1976b). Health hazard evaluation report no. HHE 76-24-350, Dana Corporation, Tipon, Indiana. (HHE 76-24-350). Cincinnati, OH: National Institute for Occupational Safety and Health.

Kramkowski, RS. (1978). Health hazard evaluation report no. HHE 78-56-511, Westclox-Division of General Time Corp., Peru, Illinois. (HHE 78-56-511). Cincinnati, OH: National Institute for Occupational Safety and Health.

Labra, M; Mattia, F; Bernasconi, M; Bertacchi, D; Grassi, F; Bruni, I; Citterio, S. (2010). The Combined Toxic and Genotoxic Effects of Chromium and Volatile Organic Contaminants to Pseudokirchneriella subcapitata. Water Air Soil Pollut 213: 57-70. http://dx.doi.org/10.1007/s11270-010-0367-3

Leblanc, GA. (1980). Acute toxicity of priority pollutants to water flea (Daphnia magna). Bull Environ Contam Toxicol 24: 684-691. http://dx.doi.org/10.1007/BF01608174

Leighton, DT, Jr; Calo, JM. (1981). Distribution coefficients of chlorinated hydrocarbons in dilute air-water systems for groundwater contamination applications. Journal of Chemical and Engineering Data 26: 382-585. http://dx.doi.org/10.1021/je00026a010

Lewis, FA. (1980). Health hazard evaluation report no. HHE 80-87-708, Harowe Servo Contorls Inc., West Chester, Pennsylvania. (HHE 80-87-708). Cincinnati, OH: National Institute for Occupational Safety and Health.

Lide, DR. (2007). CRC handbook of chemistry and physics: A ready-reference book of chemical and physical data. In DR Lide (Ed.), (88th ed.). Boca Raton, FL: CRC Press.

Love, JR; Kern, M. (1981). Health hazard evaluation report no. HETA-81-065-938, METRO Bus Maintenance Shop, Washington, DC. (HETA-81-065-938). Cincinnati, OH: National Institue for Occupational Safety and Health. https://www.cdc.gov/niosh/hhe/reports/pdfs/81-65-938.pdf

Lukavsky, J; Furnadzhieva, S; Dittrt, F. (2011). Toxicity of Trichloroethylene (TCE) on Some Algae and Cyanobacteria. Bull Environ Contam Toxicol 86: 226-231. http://dx.doi.org/10.1007/s00128-011-0195-1

Marshall, KA; Pottenger, LH. (2004). Chlorocarbons and chlorohydrocarbons.

Martí, V; Jubany, I; Pérez, C; Rubio, X; De Pablo, J; Giménez, J. (2014). Human health risk assessment of a landfill based on volatile organic compounds emission, immission and soil gas concentration measurements. Appl Geochem 49: 218-224. http://dx.doi.org/10.1016/j.apgeochem.2014.06.018

McCulloch, A; Midgley, PM. (1996). The production and global distribution of emissions of trichloroethene, tetrachloroethene and dichloromethane over the period 1988−1992. Atmos Environ 30: 601-608. http://dx.doi.org/10.1016/1352-2310(09)50032-5

McDaniel, T; Martin, P; Ross, N; Brown, S; Lesage, S; Pauli, B. (2004). Effects of chlorinated solvents on four species of North American amphibians. Arch Environ Contam Toxicol 47: 101-109.

McKone, TE; Knezovich, JP. (1991). The transfer of trichloroethylene (TCE) from a shower to indoor air: experimental measurements and their implications. J Air Waste Manag Assoc 41: 832-837.

McManus, KP; London, M. (1984). Health hazard evaluation report no. HETA 84-014-1507, Davis & Geck, Inc., Danbury, Connecticut. (HETA 84-014-1507). Cincinnati, OH: National Institute for Occupational Safety and Health.

MDE. (2013). Facts about: Gateway South. Baltimore, MD. http://www.mde.state.md.us/programs/Land/MarylandBrownfieldVCP/mapping/Documents/Gateway%20South%20Phase%20I.pdf

Murphy, BL. (2016). Vapor degreasing with chlorinated solvents. Environ Forensics 17: 282-293. http://dx.doi.org/10.1080/15275922.2016.1230907

NAC/AEGL (National Advisory Committee for Acute Exposure Guideline Levels for Hazardous Substances). (2009). Trichloroethylene (CAS reg. no. 79-01-6): Interim acute exposure guidelines levels (AEGLs) [AEGL]. Washington, DC: National Advisory Committee for Acute Exposure Guideline Levels. https://www.epa.gov/sites/production/files/2014-08/documents/trichloroethylene_interim_dec_2008_v1.pdf

Nagaya, T; Ishikawa, N; Hata, H. (1989). Urinary total protein and "beta"-2-microglobulin in workers exposed to trichloroethylene. Environ Res 50: 86-92. http://dx.doi.org/10.1016/S0013-9351(89)80050-7

Nakatsuka, H; Watanabe, T; Takeuchi, Y; Hisanaga, N; Shibata, E; Suzuki, H; Huang, MY; Chen, Z; Qu, QS; Ikeda, M. (1992). Absence of blue-yellow color vision loss among workers exposed to toluene or tetrachloroethylene, mostly at levels below occupational exposure limits. Int Arch Occup Environ Health 64: 113-117. http://dx.doi.org/10.1007/BF00381478

Neghab, M; Qu, S; Bai, CL; Caples, J; Stacey, NH. (1997). Raised concentration of serum bile acids following occupational exposure to halogenated solvents, 1,1,2-trichloro-1,2,2-trifluoroethane and trichloroethylene. Int Arch Occup Environ Health 70: 187-194. http://dx.doi.org/10.1007/s004200050205

Neuhauser, EFL, R. C. Malecki, M. R. (1986). Contact and Artificial Soil Tests Using Earthworms to Evaluate the Impact of Wastes in Soil. 886: 192-203.

Neuhauser, EFL, R. C. Malecki, M. R. Milligan, D. L. Durkin, P. R. (1985). The Toxicity of Selected Organic Chemicals to the Earthworm Eisenia fetida. 14: 383-388 (OECDG Data File).

NEWMOA (Northeast Waste Management Officials' Association). (2001). Pollution prevention technology profile - Closed loop vapor degreasing. Boston, MA. http://www.newmoa.org/prevention/p2tech/ProfileVaporDegreasing.pdf

NICNAS (National Industrial Chemicals Notification and Assessment Scheme). (2000). Trichloroethylene: Priority existing chemical assessment report no. 8. (8). Sydney, Australia. http://www.nicnas.gov.au/Publications/CAR/PEC/PEC8.asp

Niederlehner, B; Cairns, J; Smith, E. (1998). Modeling acute and chronic toxicity of nonpolar narcotic chemicals and mixtures to Ceriodaphnia dubia. Ecotoxicol Environ Saf 39: 136-146. http://dx.doi.org/10.1006/eesa.1997.1621

NIH. (2016). Report on carcinogens: Trichloroethylene. Washington, DC: National Toxicology Program. https://ntp.niehs.nih.gov/pubhealth/roc/index-1.html#C

NIOSH. (1973). Criteria for a recommended standard: occupational exposure to trichloroethylene. (HSM 73-11025).

NIOSH. (1982). Health hazard evaluation report no. HETA-82-136-1175, U.S. Army Research Office, Research Triangle Park, North Carolina. (HETA 82-136-1175). Cincinnati, OH. https://www.cdc.gov/niosh/hhe/reports/pdfs/1982-0136-1175.pdf

NIOSH. (1989). Appendix G: 1989 Air Contaminants Update Project- Exposure Limits NOT in Effect. Available online at https://www.cdc.gov/niosh/npg/nengapdxg.html

NIOSH. (1992). Health hazard evaluation report no. HETA-90-223-2211, Thomson Consumer Electronics, Marion, Indiana. (HETA 90-223-2211). Cincinnati, OH. https://www.cdc.gov/niosh/hhe/reports/pdfs/1990-0223-2211.pdf

NIOSH (National Institute for Occupational Safety and Health). (1997). Control of health and safety hazards in commercial drycleaners: chemical exposures, fire hazards, and ergonomic risk factors. (DHHS (NIOSH) Publication Number 97-150). Atlanta, GA. http://www.cdc.gov/niosh/docs/97-150/

NIOSH. (2014). FACE Report: Three dead in confined space incident in New York (FACE 8634). (FACE 8634). CDC. https://www.cdc.gov/niosh/face/in-house/full8634.html

NIOSH. (2016). NIOSH pocket guide to chemical hazards: Trichloroethylene. Atlanta, GA: Centers for Disease Control and Prevention. https://www.cdc.gov/niosh/npg/npgd0629.html

NIOSH. (2017). NIOSH Skin Notation Profiles: Trichloroethylene (TCE). (DHHS (NIOSH): 2017-192). Cincinnati, OH: U.S. Department of Health and Human Services, Centers for Disease Control and Prevention, National Institute for Occupational Safety and Health. https://www.cdc.gov/niosh/docs/2017-192/2017-192.pdf?id=10.26616/NIOSHPUB2017192

NRC (National Research Council). (2006). Assessing the human health risks of trichloroethylene: Key scientific issues. Washington, DC: The National Academies Press. http://www.nap.edu/catalog.php?record_id=11707

O'Neil, MJ; Heckelman, PE; Koch, CB. (2006). The Merck index: An encyclopedia of chemicals, drugs, and biologicals (14th ed.). Whitehouse Station, NJ: Merck & Co.

O'Neil, MJ; Smith, A; Heckelman, PE. (2001). Merck Index Trichloroethylene. Whitehouse Station, NJ: Merck & Co., Inc.

OECD (Organisation for Economic Co-operation and Development). (2004). Emission scenario document on lubricants and lubricant additives. (JT00174617). Paris, France.

OECD (Organisation for Economic Co-operation and Development). (2009a). Emission scenario document on adhesive formulation. (JT03263583). Paris, France.

OECD (Organisation for Economic Co-operation and Development). (2009b). Emission scenario documents on coating industry (paints, lacquers and varnishes). (JT03267833). Paris, France.

OECD (Organisation for Economic Co-operation and Development). (2011). Emission scenario document on the use of metalworking fluids. (JT03304938). Organization for Economic Cooperation and Development.

OECD (Organisation for Economic Co-operation and Development). (2013). Emission scenario document on the industrial use of adhesives for substrate bonding. Paris, France.

OECD (Organisation for Economic Co-operation and Development). (2015). Emission scenario document on use of adhesives. (Number 34). Paris, France. http://www.oecd.org/officialdocuments/publicdisplaydocumentpdf/?cote=ENV/JM/MONO(2015)4&doclanguage=en

Okawa, MT. (1973). Health hazard evaluation report no. HHE 72-74-51, Western Electric Company, Dublic, California. (HHE 72-74-51). Cincinnati, OH: National Institute for Occupational Safety and Health. https://www.cdc.gov/niosh/hhe/reports/pdfs/72-74-51.pdf

Okawa, MT. (1975). Health hazard evaluation report no. HHE 74-96-173, Richdel Corporation, Carson City, Nevada. (HHE 74-96-173). Cincinnati, OH: National Institute for Occupational Safety and Health.

OSHA. (1989). 1988 OSHA Pel Project documentation: Trichloroethyle. Available online at https://www.cdc.gov/niosh/pel88/79-01.html

OSHA. (1997). Final rules: Occupational exposure to methylene chloride. Washington, DC: U.S. Department of Labor, Occupational Safety and Health Administration. https://www.osha.gov/pls/oshaweb/owadisp.show_document?p_table=FEDERAL_REGISTER&p_id=13600

OSHA. (1999). Sampling and analytical methods: Tetrachloroethylene trichloroethylene. Washington, DC: U.S. Department of Labor, Occupational Safety and Health Administration. https://www.osha.gov/dts/sltc/methods/mdt/mdt1001/1001.html

OSHA. (2003). Personal protective equipment. Publication # OSHA 3151-12R. www.osha.gov/Publications/osha3151.pdf

OSHA. (2017). WTC OSHA non-asbestos sampling data for Southeast area. Washington, DC: Occupational Safety and Health Administration. https://www.osha.gov/nyc-disaster/southeast-organic.html

Parker Hannifin Manufacturing. (2014). Chemical safety report: Use of trichloroethylene as a process solvent for the manufacturing of hollow fibre gas separation membranes out of polyphenylene oxide (PPO). Ispra, Italy: European Commission Joint Research Centre, Institute for Health and

Consumer Protection, European Chemicals Bureau. http://ec.europa.eu/DocsRoom/documents/10791/attachments/1/translations/en/renditions/native
Raaschou-Nielsen, O; Hansen, J; Mclaughlin, JK; Kolstad, H; Christensen, JM; Tarone, RE; Olsen, JH. (2003). Cancer risk among workers at Danish companies using trichloroethylene: A cohort study. Am J Epidemiol 158: 1182-1192. http://dx.doi.org/10.1093/aje/kwg282
Raaschou-Nielsen, O; Hansen, J; Thomsen, BL; Johansen, I; Lipworth, L; McLaughlin, JK; Olsen, JH. (2002). Exposure of Danish workers to trichloroethylene, 1947-1989. Appl Occup Environ Hyg 17: 693-703. http://dx.doi.org/10.1080/10473220290096186
RAG Aktiengesellschaft. (2014). Chemical safety report: Trichloroethylene. Ispra, Italy: European Commission Joint Research Centre, Institute for Health and Consumer Protection, European Chemicals Bureau. http://ec.europa.eu/DocsRoom/documents/10925/attachments/1/translations/en/renditions/native
Rasmussen, K; Jeppesen, HJ; Sabroe, S. (1993). Solvent-induced chronic toxic encephalopathy. Am J Ind Med 23: 779-792. http://dx.doi.org/10.1002/ajim.4700230511
Rastkari, N; Yunesian, M; Ahmadkhaniha, R. (2011). Exposure Assessment to Trichloroethylene and Perchloroethylene for Workers in the Dry Cleaning Industry. Bull Environ Contam Toxicol 86: 363-367. http://dx.doi.org/10.1007/s00128-011-0244-9
Reh, BD. (1995). Health hazard evaluation report no. HETA-94-0298, Gen Corp Automotive, Wabash, Indiana. (HETA-94-0298). Cincinnati, OH: National Institute for Occupational Safety and Health. https://www.cdc.gov/niosh/hhe/reports/pdfs/1994-0298-2499.pdf
Rosensteel, RE; Lucas, JB. (1975). Health hazard evaluation report no. HHE 74-28-212, Westinghouse Air Brake Company, Wilmerding, Pennsyvlania. (HHE 74-28-212). Cincinnati, OH: National Institute for Occupational Safety and Health.
Ruhe, RL. (1982). Health hazard evaluation report no. HETA 82-040-119, Synthes Ltd. (USA), Monument, Colorado. (HETA 82-040-119). Cincinnati, OH: National Institute for Occupational Safety and Health.
Ruhe, RL; Watanabe, A; Stein, G. (1981). Health hazard evaluation report no. HHE 80-49-808, Superior Tube Company, Collegeville, Pennsylvania. (HHE 80-49-808). Cincinnati, OH: National Institute for Occupational Safety and Health. https://www.cdc.gov/niosh/hhe/reports/pdfs/80-49-808.pdf
Ruijten, MW; Verberk, MM; Sallé, HJ. (1991). Nerve function in workers with long term exposure to trichloroethene. Br J Ind Med 48: 87-92.
Rulis, A, Ian. (2002). Agency response letter GRAS notice no. GRN 000082. Silver Spring, MD: Rulis, Alan. https://www.fda.gov/Food/IngredientsPackagingLabeling/GRAS/NoticeInventory/ucm154595.htm
Seiji, K; Jin, C; Watanabe, T; Nakatsuka, H; Ikeda, M. (1990). Sister chromatid exchanges in peripheral lymphocytes of workers exposed to benzene, trichloroethylene, or tetrachloroethylene, with reference to smoking habits. Int Arch Occup Environ Health 62: 171-176. http://dx.doi.org/10.1007/BF00383594
Skender, LJ; Karacic, V; Prpic-Majic, D. (1991). A comparative study of human levels of trichloroethylene and tetrachloroethylene after occupational exposure [Review]. Arch Environ Health 46: 174-178. http://dx.doi.org/10.1080/15459620802510866
Smart, BE; Fernandez, RE. (2000). Fluorinated aliphatic compounds [Encyclopedia]. In Kirk-Othmer encyclopedia of chemical technology. Hoboken, NJ: John Wiley and Sons, Inc. http://dx.doi.org/10.1002/0471238961.0612211519130118.a01
http://onlinelibrary.wiley.com/doi/10.1002/0471238961.0612211519130118.a01/abstract
Smith, ADB, A. Mallard, C. Orr, D. Smith, K. Sutton, J. A. Vukmanich, J. Mccarty, L. S. Ozburn, G. W. (1991). The acute and chronic toxicity of ten chlorinated organic compounds to the American

flagfish (Jordanella floridae). Arch Environ Contam Toxicol 20: 94-102. http://dx.doi.org/10.1007/BF01065334

Snedecor, G; Hickman, JC; Mertens, JA. (2004a). Chloroethylenes and chloroethanes.

Snedecor, G; Hickman, JC; Mertens, JA. (2004b). Kirk-Othmer Encyclopedia of Chemical Technology Chloroethylenes. [online]: John Wiley & Sons, Inc.

Snyder, EM. (2003). Health hazard evaluation report no. HETA 2001-0150-2917, IKI Manufacturing, Edgerton, Wisconsin. (HETA 2001-0150-2917). Cincinnati, OH: National Institute for Occupational Safety and Health.

Stewart, PA; Lee, JS; Marano, DE; Spirtas, R; Forbes, CD; Blair, A. (1991). Retrospective cohort mortality study of workers at an aircraft maintenance facility: II. Exposures and their assessment. Br J Ind Med 48: 531-537.

Straub, WE; Meyer, C. (1977). Health hazard evaluation report no. HHE 77-3-420, Essex International, Kittaning, PA. (HHE 77-3-420). Cincinnati, OH: National Institute for Occupational Safety and Health.

Strycharz, S; Newman, L. (2009). USE OF NATIVE PLANTS FOR REMEDIATION OF TRICHLOROETHYLENE: I. DECIDUOUS TREES. Int J Phytoremediation 11: 150-170. http://dx.doi.org/10.1080/15226510802378442

Tsai, KPC, C. Y. (2007). An Algal Toxicity Database of Organic Toxicants Derived by a Closed-System Technique. 26: 1931-1939.

U.S EPA. (2014). Toxic release inventory: Trichloroethylene [Database]. Retrieved from http://java.epa.g+X32:AO32ov/chemview

U.S. EPA (U.S. Environmental Protection Agency). (1977). Control of volatile organic emissions from solvent metal cleaning [EPA Report]. (EPA-450/2-77-022). Research Triangle Park, NC: U.S. Environmental Protection Agency, Office of Air and Waste Management, Office of Air Quality Planning and Standards.

U.S. EPA (U.S. Environmental Protection Agency). (1980a). Compilation of air pollutant emission factors. Chapter 4.7: Wste solvent reclamation. Office of Air and Radiation, Office of Air Quality and Planning Standards.

U.S. EPA. (1980b). Waste solvent reclamation. In AP-42 Compilation of air pollutant emission factors. Research Triangle Park, NC: Office of Air and Radiation, Office of Air Quality and Planning Standards.

U.S. EPA. (1985). Occupational exposure and environmental release assessment of tetrachloroethylene. Office of Pesticides and Toxic Substances.

U.S. EPA (U.S. Environmental Protection Agency). (1994). Methods for derivation of inhalation reference concentrations and application of inhalation dosimetry [EPA Report] (pp. 1-409). (EPA/600/8-90/066F). Research Triangle Park, NC: U.S. Environmental Protection Agency, Office of Research and Development, Office of Health and Environmental Assessment, Environmental Criteria and Assessment Office. https://cfpub.epa.gov/ncea/risk/recordisplay.cfm?deid=71993&CFID=51174829&CFTOKEN=25006317

U.S. EPA (U.S. Environmental Protection Agency). (1995). Guidance document for the halogenated solvent cleaner NESHAP. (EPA-453/R-94-081). Research Triangle Park, NC: Office of Air Quality Planning and Standards, Information Transfer and Program Integration Division, Control Technology Center, Federal Small Business Assistance Program.

U.S. EPA (U.S. Environmental Protection Agency). (1998). Guidelines for ecological risk assessment [EPA Report]. (EPA/630/R-95/002F). Washington, DC: U.S. Environmental Protection Agency, Risk Assessment Forum. http://www.epa.gov/raf/publications/guidelines-ecological-risk-assessment.htm

U.S. EPA (U.S. Environmental Protection Agency). (2000). Science policy council handbook: Risk characterization (pp. 1-189). (EPA/100/B-00/002). Washington, D.C.: U.S. Environmental Protection Agency, Science Policy Council. https://www.epa.gov/risk/risk-characterization-handbook

U.S. EPA (U.S. Environmental Protection Agency). (2001). Sources, emission and exposure for trichloroethylene (TCE) and related chemicals [EPA Report]. (EPA/600/R-00/099). Washington, DC. https://cfpub.epa.gov/ncea/risk/recordisplay.cfm?deid=21006

U.S. EPA. (2002). Guidelines for ensuring and maximizing the quality, objectivity, utility, and integrity, of information disseminated by the Environmental Protection Agency. (EPA/260/R-02/008). Washington, DC: U.S. Environmental Protection Agency, Office of Environmental Information. http://www.epa.gov/quality/informationguidelines/documents/EPA_InfoQualityGuidelines.pdf

U.S. EPA (U.S. Environmental Protection Agency). (2005). Guidelines for carcinogen risk assessment [EPA Report] (pp. 1-166). (EPA/630/P-03/001F). Washington, DC: U.S. Environmental Protection Agency, Risk Assessment Forum. http://www2.epa.gov/osa/guidelines-carcinogen-risk-assessment

U.S. EPA (U.S. Environmental Protection Agency). (2006). A framework for assessing health risk of environmental exposures to children (pp. 1-145). (EPA/600/R-05/093F). Washington, DC: U.S. Environmental Protection Agency, Office of Research and Development, National Center for Environmental Assessment. http://cfpub.epa.gov/ncea/cfm/recordisplay.cfm?deid=158363

U.S. EPA (U.S. Environmental Protection Agency). (2007). AirData. Office of Air Quality Planning and Standards. http://www3.epa.gov/airquality/airdata/

U.S. EPA (U.S. Environmental Protection Agency). (2010). Six-year review 2 contaminant occurrence data (1998-2005). https://www.epa.gov/dwsixyearreview/six-year-review-2-contaminant-occurrence-data-1998-2005

U.S. EPA (U.S. Environmental Protection Agency). (2011a). ADAF sample calculator [Database]. Washington, DC.

U.S. EPA (U.S. Environmental Protection Agency). (2011b). Recommended use of body weight 3/4 as the default method in derivation of the oral reference dose (pp. 1-50). (EPA/100/R11/0001). Washington, DC: U.S. Environmental Protection Agency, Risk Assessment Forum, Office of the Science Advisor. https://www.epa.gov/risk/recommended-use-body-weight-34-default-method-derivation-oral-reference-dose

U.S. EPA (U.S. Environmental Protection Agency). (2011c). Toxicological Review of Trichloroethylene (CAS No. 79-01-6) in Support of Summary Information on the Integrated Risk Information System (IRIS) [EPA Report].

U.S. EPA (U.S. Environmental Protection Agency). (2012a). Estimation Programs Interface (EPI) Suite™ for Microsoft® Windows (Version 4.11). Washington D.C.: Environmental Protection Agency. Retrieved from http://www.epa.gov/opptintr/exposure/pubs/episuite.htm

U.S. EPA. (2012b). Sustainable futures P2 framework manual [EPA Report]. (EPA-748-B12-001). Washington DC. http://www.epa.gov/sustainable-futures/sustainable-futures-p2-framework-manual

U.S. EPA (U.S. Environmental Protection Agency). (2013). Interpretive assistance document for assessment of discrete organic chemicals. Sustainable futures summary assessment [EPA Report]. Washington, DC. http://www.epa.gov/sites/production/files/2015-05/documents/05-iad_discretes_june2013.pdf

U.S. EPA (U.S. Environmental Protection Agency). (2014a). Degreasing with TCE in commercial facilities: Protecting workers [EPA Report]. Washington, DC: U.S. Environmental Protection Agency, Office of Pollution Prevention and Toxics.

U.S. EPA (U.S. Environmental Protection Agency). (2014b). Framework for human health risk assessment to inform decision making. Final [EPA Report]. (EPA/100/R-14/001). Washington,

DC: U.S. Environmental Protection, Risk Assessment Forum. http://www2.epa.gov/risk/framework-human-health-risk-assessment-inform-decision-making

U.S. EPA (U.S. Environmental Protection Agency). (2014c). TSCA work plan chemical risk assessment. Trichloroethylene: Degreasing, spot cleaning and arts & crafts uses. (EPA Document #740-R1-4002). Washington, DC: Office of Chemical Safety and Pollution Prevention. http://www2.epa.gov/sites/production/files/2015-09/documents/tce_opptworkplanchemra_final_062414.pdf

U.S. EPA (U.S. Environmental Protection Agency). (2015). Update of human health ambient water quality criteria: Trichloroethylene (TCE) 79-01-6. (EPA 820-R-15-066). Washington D.C.: Office of Water, Office of Science and Technology. https://www.regulations.gov/document?D=EPA-HQ-OW-2014-0135-0173

U.S. EPA (U.S. Environmental Protection Agency). (2016a). Instructions for reporting 2016 TSCA chemical data reporting. https://www.epa.gov/chemical-data-reporting/instructions-reporting-2016-tsca-chemical-data-reporting

U.S. EPA (U.S. Environmental Protection Agency). (2016b). Public database 2016 chemical data reporting (May 2017 release). Washington, DC: US Environmental Protection Agency, Office of Pollution Prevention and Toxics. Retrieved from https://www.epa.gov/chemical-data-reporting

U.S. EPA (U.S. Environmental Protection Agency). (2016c). Supplemental exposure and risk reduction technical report in support of risk management options for trichloroethylene (TCE) use in consumer aerosol degreasing. Washington D.C.: Office of Chemical Safety and Pollution Prevention. https://www.regulations.gov/document?D=EPA-HQ-OPPT-2016-0163-0023

U.S. EPA (U.S. Environmental Protection Agency). (2016d). Supplemental occupational exposure and risk reduction technical report in support of risk management options for trichloroethylene (TCE) use in aerosol degreasing. (RIN 2070-AK03). Washington D.C.: Office of Chemical Safety and Pollution Prevention. https://www.regulations.gov/document?D=EPA-HQ-OPPT-2016-0163-0021

U.S. EPA (U.S. Environmental Protection Agency). (2016e). Supplemental occupational exposure and risk reduction technical report in support of risk management options for trichloroethylene (TCE) use in spot cleaning. (RIN 2070-AK03). Washington D.C.: Office of Chemical Safety and Pollution Prevention. https://www.regulations.gov/document?D=EPA-HQ-OPPT-2016-0163-0024

U.S. EPA (U.S. Environmental Protection Agency). (2016f). Supplemental occupational exposure and risk reduction technical report in support of risk management options for trichloroethylene (TCE) use in vapor degreasing. (RIN 2070-AK11). Washington D.C.: Office of Chemical Safety and Pollution Prevention. https://www.regulations.gov/document?D=EPA-HQ-OPPT-2016-0387-0126

U.S. EPA (U.S. Environmental Protection Agency). (2016g). TSCA work plan chemical risk assessment: Peer review draft 1-bromopropane: (n-Propyl bromide) spray adhesives, dry cleaning, and degreasing uses CASRN: 106-94-5 [EPA Report]. (EPA 740-R1-5001). Washington, DC. https://www.epa.gov/sites/production/files/2016-03/documents/1-bp_report_and_appendices_final.pdf

U.S. EPA. (2017a). Chemical test rule data: Trichloroethylene. Washington, DC. Retrieved from http://java.epa.gov/chemview

U.S. EPA (U.S. Environmental Protection Agency). (2017b). Consumer Exposure Model (CEM) version 2.0: User guide. U.S. Environmental Protection Agency, Office of Pollution Prevention and Toxics. https://www.epa.gov/sites/production/files/2017-06/documents/cem_2.0_user_guide.pdf

U.S. EPA (U.S. Environmental Protection Agency). (2017c). Preliminary information on manufacturing, processing, distribution, use, and disposal: Trichloroethylene. (EPA-HQ-OPPT-2016-0737).

Washington, DC: Office of Chemical Safety and Pollution Prevention. https://www.regulations.gov/document?D=EPA-HQ-OPPT-2016-0737-0003

U.S. EPA (U.S. Environmental Protection Agency). (2017d). Scope of the risk evaluation for trichloroethylene. CASRN: 79-01-6 [EPA Report]. (EPA-740-R1-7004). https://www.epa.gov/sites/production/files/2017-06/documents/tce_scope_06-22-17.pdf

U.S. EPA (U.S. Environmental Protection Agency). (2017e). Toxics Release Inventory (TRI). Retrieved from https://www.epa.gov/toxics-release-inventory-tri-program/tri-data-and-tools

U.S. EPA (U.S. Environmental Protection Agency). (2017f). Trichloroethylene market and use report. Washington, DC: Office of Chemical Safety and Pollution Prevention, Chemistry, Economics, and Sustainable Strategies Division.

U.S. EPA (U.S. Environmental Protection Agency). (2017g). Tricholoroethylene (79-01-6) bibliography: Supplemental file for the TSCA Scope Document [EPA Report]. https://www.epa.gov/sites/production/files/2017-06/documents/tce_comp_bib.pdf

U.S. EPA (U.S. Environmental Protection Agency). (2017h). Vapor intrusion database. Retrieved from https://www.epa.gov/vaporintrusion/vapor-intrusion-database

U.S. EPA (U.S. Environmental Protection Agency). (2018). Application of systematic review in TSCA risk evaluations: Version 1.0. (740P18001). Washington, D.C.: U.S. Environmental Protection Agency, Office of Chemical Safety and Pollution Prevention.

U.S. EPA; ICF Consulting. (2004). The U.S. solvent cleaning industry and the transition to non ozone depleting substances. http://www.hsia.org/applications/ODS%20report.pdf

Ulander, A; Selden, A; Ahlborg, G, Jr. (1992). Assessment of intermittent trichloroethylene exposure in vapor degreasing. AIHA J 53: 742-743. http://dx.doi.org/10.1080/15298669291360454

Vlisco Netherlands BV. (2014). Chemical safety report Part A: Use of trichloroethylene as a solvent for the removal and recovery of resin from dyed cloth. Ispra, Italy: European Commission Joint Research Centre, Institute for Health and Consumer Protection, European Chemicals Bureau. http://ec.europa.eu/DocsRoom/documents/10788/attachments/1/translations/en/renditions/native

Weast, RC; Selby, SM. (1966). CRC handbook of chemistry and physics Ethene, trichloro. Cleaveland, OH: The Chemical Rubber Co.

Wu, C; Schaum, J. (2000). Exposure assessment of trichloroethylene. Environ Health Perspect 108: 359-363.

Xu, X; Yang, R; Wu, N; Zhong, P; Ke, Y; Zhou, L; Yuan, J; Li, G; Huang, H; Wu, B. (2009). Severe hypersensitivity dermatitis and liver dysfunction induced by occupational exposure to trichloroethylene. Ind Health 47: 107-112.

Yang, WB; Chen, WH; Yuan, CS; Yang, JC; Zhao, QL. (2012). Comparative assessments of VOC emission rates and associated health risks from wastewater treatment processes. J Environ Monit 14: 2464-2474. http://dx.doi.org/10.1039/c2em30138e

Yoshioka, YO, Y. Sato, T. (1985). Testing for the toxicity of chemicals with Tetrahymena pyriformis. Sci Total Environ 43: 149-157.

Yoshioka, YO, Y. Sato, T. (1986). Correlation of the Five Test Methods to Assess Chemical Toxicity and Relation to Physical Properties. 12: 15-21.

Zogorski, JS; Carter, JM; Ivahnenko, T; Lapham, WW; Moran, MJ; Rowe, BL; Squillace, PJ; Toccalino, PL. (2006). Volatile organic compounds in the nation's ground water and drinking-water supply wells. (Circular 1292). Reston, VA: U.S. Department of the Interior, U.S. Geological Survey. http://pubs.usgs.gov/circ/circ1292/pdf/circular1292.pdf

APPENDICES

Appendix A REGULATORY HISTORY

A.1 Federal Laws and Regulations

Table_Apx A-1. Federal Laws and Regulations

Statutes/Regulations	Description of Authority/Regulation	Description of Regulation
EPA Regulations		
Toxics Substances Control Act (TSCA) - Section 6(a)	Provides EPA with the authority to prohibit or limit the manufacture (including import), processing, distribution in commerce, use or disposal of a chemical if EPA evaluates the risk and concludes that the chemical presents an unreasonable risk to human health or the environment.	Proposed rule under section 6 of TSCA to address the unreasonable risks presented by TCE use in vapor degreasing (82 FR 7432; January 19, 2017).
TSCA - Section 6(a)	Provides EPA with the authority to prohibit or limit the manufacture (including import), processing, distribution in commerce, use or disposal of a chemical if EPA evaluates the risk and concludes that the chemical presents an unreasonable risk to human health or the environment	Proposed rule under section 6 of TSCA to address the unreasonable risks presented by TCE use in commercial and consumer aerosol degreasing and for spot cleaning at dry cleaning facilities (81 FR 91592; December 16, 2016).
TSCA - Section 6(b)	Directs EPA to promulgate regulations to establish processes for prioritizing chemicals and conducting risk evaluations on priority chemicals. In the meantime, EPA is directed to identify and begin risk evaluations on 10 chemical substances drawn from the 2014 update of the TSCA Work Plan for Chemical Assessments.	TCE is on the initial list of chemicals to be evaluated for unreasonable risks under TSCA (81 FR 91927, December 19, 2016).
TSCA - Section 5(a)	Once EPA determines that a use of a chemical substance is a significant new use under TSCA section 5(a), persons are required to submit a significant new use notice (SNUN) to EPA at least 90 days before they manufacture (including import) or process the chemical substance for that use.	Significant New Use Rule (SNUR) (81 FR 20535; April 8, 2016). TCE is subject to reporting under the SNUR for manufacture (including import) or processing of TCE for use in a consumer product except for use in cleaners and solvent degreasers, film cleaners, hoof polishes, lubricants, mirror edge sealants and pepper spray. This SNUR ensures that EPA will

ED_004056A_00072837-00087

Statutes/Regulations	Description of Authority/Regulation	Description of Regulation
		have the opportunity to review any new consumer uses of TCE and, if appropriate, take action to prohibit or limit those uses.
TSCA - Section 8(a)	The TSCA section 8(a) CDR rule requires manufacturers (including importers) to give EPA basic exposure-related information on the types, quantities and uses of chemical substances produced domestically and imported into the United States.	TCE manufacturing (including importing), processing and use information is reported under the CDR rule (76 FR 50816, August 16, 2011).
TSCA - Section 8(b)	EPA must compile, keep current and publish a list (the TSCA Inventory) of each chemical substance manufactured, processed or imported in the United States.	TCE was on the initial TSCA Inventory and was therefore not subject to EPA's new chemicals review process (60 FR 16309, March 29, 1995).
TSCA - Section 8(e)	Manufacturers (including imports), processors and distributors must immediately notify EPA if they obtain information that supports the conclusion that a chemical substance or mixture presents a substantial risk of injury to health or the environment.	28 substantial risk notifications received for TCE (U.S. EPA, ChemView. Accessed April 13, 2017).
TSCA - Section 4	Provides EPA with authority to issue rules and orders requiring manufacturers (including importers) and processors to test chemical substances and mixtures.	Seven studies received for TCE (U.S. EPA, ChemView. Accessed April 13, 2017).
Emergency Planning and Community Right-to-Know Act (EPCRA) - Section 313	Requires annual reporting from facilities in specific industry sectors that employ 10 or more full time equivalent employees and that manufacture, process, or otherwise use a TRI-listed chemical in quantities above threshold levels. A facility that meets reporting requirements must submit a reporting form for each chemical for which it triggered reporting, providing data across a variety of categories, including activities and uses of the chemical, releases and other waste management (e.g., quantities recycled, treated, combusted) and pollution prevention activities (under section 6607 of the Pollution Prevention Act). These data include on- and off-site data as well	TCE is a listed substance subject to reporting requirements under 40 CFR 372.65 effective as of January 1, 1987.

Statutes/Regulations	Description of Authority/Regulation	Description of Regulation
	as multimedia data (i.e., air, land and water).	
Federal Insecticide, Fungicide, and Rodenticide Act (FIFRA) - Section 6	FIFRA governs the sale, distribution and use of pesticides. Section 3 of FIFRA generally requires that pesticide products be registered by EPA prior to distribution or sale. Pesticides may only be registered if, among other things, they do not cause "unreasonable adverse effects on the environment." Section 6 of FIFRA provides EPA with the authority to cancel pesticide registrations if either: (1) the pesticide, labeling, or other material does not comply with FIFRA or (2) when used in accordance with widespread and commonly recognized practice, the pesticide generally causes unreasonable adverse effects on the environment.	TCE is no longer used as an inert ingredient in pesticide products.
Clean Air Act (CAA) - Section 112(b)	Defines the original list of 189 HAPs. Under 112(c) of the CAA, EPA must identify and list source categories that emit HAPs and then set emission standards for those listed source categories under CAA section 112(d). CAA section 112(b)(3)(A) specifies that any person may petition the Administrator to modify the list of HAPs by adding or deleting a substance. Since 1990, EPA has removed two pollutants from the original list, leaving 187 at present.	Lists TCE as a HAP (42 U.S.C. 7412(b)(1)).
CAA - Section 112(d)	Section 112(d) states that the EPA must establish a National Emission Standards for Hazardous Air Pollutants (NESHAP) for each category or subcategory of major sources and area sources of HAPs (listed pursuant to Section 112(c)). The standards must require the maximum degree of emission reduction that EPA determines to be achievable by each particular source category. Different criteria for maximum achievable control technology (MACT) apply for new and existing sources. Less stringent standards, known as generally available control technology (GACT) standards,	EPA has promulgated a number of NESHAP regulating industrial source categories that emit trichloroethylene and other HAP https://www.epa.gov/stationary-sources-air-pollution/halogenated-solvent-cleaning-national-emission-standards-hazardou-0 . These include, for example, the NESHAP for Halogenated Solvent Cleaning (59 FR 61801; December 2, 1994), among others.

Statutes/Regulations	Description of Authority/Regulation	Description of Regulation
	are allowed at the Administrator's discretion for area sources.	
CAA - Sections 112(d) and 112 (f)	Risk and technology review (RTR) of section 112(d) MACT standards. Section 112(f)(2) requires EPA to conduct risk assessments for each source category subject to section 112(d) MACT standards, and to determine if additional standards are needed to reduce remaining risks. Section 112(d)(6) requires EPA to review and revise the MACT standards, as necessary, taking into account developments in practices, processes and control technologies.	EPA has promulgated a number of RTR NESHAP (e.g., the RTR NESHAP for Halogenated Solvent Cleaning (72 FR 25138; May 3, 2007) and will do so, as required, for the remaining source categories with NESHAP.
CWA – Sections 301(b), 304(b), 306, and 307(b)	Requires establishment of Effluent Limitations Guidelines and Standards for conventional, toxic, and non-conventional pollutants. For toxic and non-conventional pollutants, EPA identifies the best available technology that is economically achievable for that industry after considering statutorily prescribed factors and sets regulatory requirements based on the performance of that technology. Regulations apply to existing and new sources.	TCE is designated as a toxic pollutant under section 307(a)(1) of the CWA and as such, is subject to effluent limitations.
CWA - Section 307(a)	Establishes a list of toxic pollutants or combination of pollutants under the to the CWA. The statute specifies a list of families of toxic pollutants also listed in 40 CFR 401.15. The "priority pollutants" specified by those families are listed in 40 CFR part 423, Appendix A. These are pollutants for which best available technology effluent limitations must be established on either a national basis through rules, or on a case-by-case best professional judgement basis in National Pollutant Discharge Elimination System (NPDES) permits.	
Safe Drinking Water Act (SDWA) - Section 1412	Requires EPA to publish a non-enforceable maximum contaminant level goals (MCLGs) for contaminants which 1. may have an adverse effect on the health of persons; 2. are known to occur	EPA issued drinking water standards for TCE pursuant to section 1412 of the SDWA. EPA promulgated the NPDWR for TCE in 1987 with a MCLG of zero an

Statutes/Regulations	Description of Authority/Regulation	Description of Regulation
	or there is a substantial likelihood that the contaminant will occur in public water systems with a frequency and at levels of public health concern; and 3. in the sole judgement of the Administrator, regulation of the contaminant presents a meaningful opportunity for health risk reductions for persons served by public water systems. When EPA publishes an MCLG, EPA must also promulgate a National Primary Drinking Water Regulation (NPDWR) which includes either an enforceable maximum contaminant level (MCL), or a required treatment technique. Public water systems are required to comply with NPDWRs	enforceable MCL of 0.005 mg/L (52 FR 25690, July 8, 1987).
RCRA - Section 3001	Directs EPA to develop and promulgate criteria for identifying the characteristics of hazardous waste, and for listing hazardous waste, taking into account toxicity, persistence, and degradability in nature, potential for accumulation in tissue and other related factors such as flammability, corrosiveness, and other hazardous characteristics.	TCE is included on the list of commercial chemical products, manufacturing chemical intermediates or off-specification commercial chemical products or manufacturing chemical intermediates that, when disposed (or when formulations containing any one of these as a sole active ingredient are disposed) unused, become hazardous wastes pursuant to RCRA 3001. RCRA Hazardous Waste Status: D040 at 0.5 mg/L; F001, F002; U228
Comprehensive Environmental Response, Compensation and Liability Act (CERCLA) - Section 102(a)	Authorizes EPA to promulgate regulations designating as hazardous substances those substances which, when released into the environment, may present substantial danger to the public health or welfare or the environment. EPA must also promulgate regulations establishing the quantity of any hazardous substance the release of which must be reported under Section 103. Section 103 requires persons in charge of vessels or facilities to report to the National Response Center if they have knowledge of a release of a hazardous	TCE is a hazardous substance with a reportable quantity pursuant to section 102(a) of CERCLA (40 CFR 302.4) and EPA is actively overseeing cleanup of sites contaminated with TCE pursuant to the National Contingency Plan (NCP) (40 CFR 751).

Statutes/Regulations	Description of Authority/Regulation	Description of Regulation
	substance above the reportable quantity threshold.	
Other Federal Regulations		
OSHA	Requires employers to provide their workers with a place of employment free from recognized hazards to safety and health, such as exposure to toxic chemicals, excessive noise levels, mechanical dangers, heat or cold stress or unsanitary conditions.	In 1971, OSHA issued occupational safety and health standards for TCE that included a Permissible Exposure Limit (PEL) of 100 ppm TWA, exposure monitoring, control measures and respiratory protection (29 CFR 1910.1000). While OSHA has established a PEL for TCE, OSHA has recognized that many of its permissible exposure limits (PELs) are outdated and inadequate for ensuring protection of worker health. Most of OSHA's PELs were issued shortly after adoption of the Occupational Safety and Health (OSH) Act in 1970, and have not been updated since that time. Section 6(a) of the OSH Act granted the Agency the authority to adopt existing Federal standards or national consensus standards as enforceable OSHA standards. For TCE, OSHA recommends the use of the NIOSH REL of 2 ppm (as a 60-minute ceiling) during the usage of TCE as an anesthetic agent and 25 ppm (as a 10-hour TWA) during all other exposures.
Atomic Energy Act	The Atomic Energy Act authorizes the Department of Energy to regulate the health and safety of its contractor employees	10 CFR 851.23, Worker Safety and Health Program, requires the use of the 2005 ACGIH TLVs if they are more protective than the OSHA PEL. The 2005 TLV for TCE is 50 ppm.
Federal Food, Drug, and Cosmetic Act (FFDCA)	Provides the FDA with authority to oversee the safety of food, drugs and cosmetics.	Tolerances are established for residues of TCE resulting from its use as a solvent in the manufacture of decaffeinated coffee and spice oleoresins (21 CFR 173.290).

A.2 State Laws and Regulations

Table_Apx A-2. State Laws and Regulations

State Actions	Description of Action
California Code of Regulations (CCR), Title 17, Section 94509(a)	Lists standards for VOCs for consumer products sold, supplied, offered for sale or manufactured for use in California. As part of that regulation, use of consumer general purpose degreaser products that contain TCE are banned in California and safer substitutes are in use (17 CCR, Section 94509(a).
State Permissible Exposure Limits (PELs)	Most states have set PELs identical to the OSHA 100 ppm 8-hour TWA PEL. Nine states have PELs of 50 ppm. California's PEL of 25 ppm is the most stringent (CCR, Title 8, Table AC-1).
VOC regulations for consumer products	Many states regulate TCE as a VOC. These regulations may set VOC limits for consumer products and/or ban the sale of certain consumer products as an ingredient and/or impurity. Regulated products vary from state to state, and could include contact and aerosol adhesives, aerosols, electronic cleaners, footwear or leather care products and general degreasers, among other products. California (Title 17, California Code of Regulations, Division 3, Chapter 1, Subchapter 8.5, Articles 1, 2, 3 and 4), Connecticut (R.C.S.A Sections 22a-174-40, 22a-174-41, and 22a-174-44), Delaware (Adm. Code Title 7, 1141), District of Columbia (Rules 20-720, 20-721, 20-735, 20-736, 20-737), Illinois (35 Adm Code 223), Indiana (326 IAC 8-15), Maine (Chapter 152 of the Maine Department of Environmental Protection Regulations), Maryland (COMAR 26.11.32.00 to 26.11.32.26), Michigan (R 336.1660 and R 336. 1661), New Hampshire (Env-A 4100) New Jersey (Title 7, Chapter 27, Subchapter 24), New York (6 CRR-NY III A 235), Rhode Island (Air Pollution Control Regulation No. 31) and Virginia (9VAC5 Chapter 45) all have VOC regulations or limits for consumer products. Some of these states also require emissions reporting.
Other	TCE is on California Proposition 65 List of chemicals known to cause cancer in 1988 or birth defects or other reproductive harm in 2014 (CCR Title 27, section 27001). TCE is on California's Safer Consumer Products Regulations Candidate List of chemicals that exhibit a hazard trait and are on an authoritative list (CCR Title 22, Chapter 55).

ED_004056A_00072837-00093

A.3 International Laws and Regulations

Table_Apx A-3. Regulatory Actions by Other Governments and Tribes

Country/ Organization	Requirements and Restrictions
Canada	TCE is on the Canadian List of Toxic Substances (CEPA 1999 Schedule 1). TCE is also regulated for use and sale for solvent degreasing under *Solvent Degreasing Regulations (SOR/2003-283)* (*Canada Gazette*, Part II on August 13, 2003). The purpose of the regulation is to reduce releases of TCE into the environment from solvent degreasing facilities using more than 1000 kilograms of TCE per year. The regulation includes a market intervention by establishing tradable allowances for the use of TCE in solvent degreasing operations that exceed the 1000 kilograms threshold per year.
European Union	In 2011, TCE was added to Annex XIV (Authorisation list) of regulation (EC) No 1907/2006 - REACH (Registration, Evaluation, Authorization and Restriction of Chemicals). Entities that would like to use TCE needed to apply for authorization by October 2014, and those entities without an authorization must stop using TCE by April 2016. The European Chemicals Agency (ECHA) received 19 applications for authorization from entities interested in using TCE beyond April 2016. TCE is classified as a carcinogen category 1B, and was added to the EU REACH restriction of substances classified as carcinogen category 1A or 1B under the EU Classification and Labeling regulation (among other characteristics) in 2009. The restriction bans the placing on the market or use of TCE as substance, as constituent of other substances, or, in mixtures for supply to the general public when the individual concentration in the substance or mixture is equal to or greater than 0.1 % w/w (Regulation (EC) No 1907/2006 - REACH (Registration, Evaluation, Authorization and Restriction of Chemicals)). Previous regulations, such as the Solvent Emissions Directive (Directive 1999/13/EC) introduced stringent emission controls of TCE.
Australia	In 2000, TCE was assessed (National Industrial Chemicals Notification and Assessment Scheme, NICNAS (2000), *Trichloroethylene*. Accessed April, 18 2017).
Japan Chemical Substances Control Law	TCE is regulated in Japan under the following legislation: • Act on the Evaluation of Chemical Substances and Regulation of Their Manufacture, etc. (Chemical Substances Control Law; CSCL)

ED_004056A_00072837-00094

	• Act on Confirmation, etc. of Release Amounts of Specific Chemical Substances in the Environment and Promotion of Improvements to the Management Thereof • Industrial Safety and Health Act (ISHA) • Air Pollution Control Law • Water Pollution Control Law • Soil Contamination Countermeasures Act • Law for the Control of Household Products Containing Harmful Substances (National Institute of Technology and Evaluation (NITE) Chemical Risk Information Platform (CHIRP), Accessed April 18, 2017).
Australia, Austria, Belgium, Canada, Denmark, Finland, France, Germany, Hungary, Ireland, Israel, Japan, Latvia, New Zealand, People's Republic of China, Poland, Singapore, South Korea, Spain, Sweden, Switzerland, United Kingdom	Occupational exposure limits for TCE (GESTIS International limit values for chemical agents (Occupational exposure limits, OELs) database. Accessed April 18, 2017).

ED_004056A_00072837-00095

Appendix B PROCESS, RELEASE AND OCCUPATIONAL EXPOSURE INFORMATION

This appendix provides information and data found in preliminary data gathering for TCE.

B.1 Process Information

Process-related information to the risk evaluation may include process diagrams, descriptions and equipment. Such information may inform potential release sources and worker exposure activities for consideration.

B.1.1 Manufacture (including Import)

B.1.1.1 Import

EPA has also not identified specific activities related to the import of TCE. EPA expects imported chemicals are stored in warehouses prior to distribution for further processing and use. In some cases, the chemicals may be repackaged into differently sized containers, depending on customer demand, and quality control (QC) samples may be taken for analyses.

According to Snedecor et al. (2004b), TCE is typically shipped by truck or rail car or in 55-gallon drums. TCE may be stored in mild steel tanks equipped with vents and vent dryers to prevent water accumulation (Snedecor et al., 2004b) .

B.1.1.2 Manufacturing

TCE was previously produced through chlorination of acetylene to 1,1,2,2-tetrachloroethane, then dehydrochlorination to TCE in an aqueous base or by thermal cracking (Snedecor et al., 2004b). Due to rising costs of acetylene, this process has largely been phased-out (ATSDR, 2014a; Snedecor et al., 2004b). Currently, most TCE is manufactured via chlorination or oxychlorination of ethylene, dichloroethane or ethylene dichloride (EDC) (ATSDR, 2014a; Snedecor et al., 2004b).

- Chlorination - The chlorination process involves a catalytic reaction of chlorine and ethylene, dichloroethane or EDC to form TCE and perchloroethylene (PCE) as co-products and hydrochloric acid (HCl) as a byproduct (ATSDR, 2014; Snedecor et al., 2004; (U.S. EPA, 1985). Typical catalysts include potassium chloride, aluminum chloride, Fuller's earth, graphite, activated carbon and activated charcoal (Snedecor et al., 2004b).
- Oxychlorination - The oxychlorination process involves the reaction of either chlorine or HCl and oxygen with ethylene, dichloroethane or EDC in the presence of a catalyst to produce TCE and PCE as co-products (ATSDR, 2014a; Snedecor et al., 2004b) . The process usually occurs in a fluidized-bed reactor (Snedecor et al., 2004b). Common catalysts are mixtures of potassium and cupric chlorides (Snedecor et al., 2004b).

In either process the product ratio of TCE to PCE products are controlled by adjusting the reactant rations (Snedecor et al., 2004b).

B.1.2 Processing

B.1.2.1 Reactant or Intermediate

Processing as a reactant or intermediate is the use of TCE as a feedstock in the production of another chemical product via a chemical reaction in which TCE is consumed to form the product. TCE is used as a feedstock in the production of HFCs alternatives to CFCs, specifically the HFC-134a alternative to CFC-12 (ATSDR, 2014a; Elsheikh et al., 2005; Snedecor et al., 2004b). The production of HFC-134a from TCE can be carried out in one of two processes (Elsheikh et al., 2005). In the first process, TCE is

ED_004056A_00072837-00096

fluorinated in either a gas- or liquid-phase reaction with hydrofluoric acid using a Lewis acid catalyst to produce the hydrochlorofluorocarbon, HCFC-133a, which is then subsequently fluorinated to produce HFC-134a by reaction with hydrofluoric acid using a catalyst (Elsheikh et al., 2005) (Smart and Fernandez, 2000). The second process involves fluorination of TCE using a chromium-based catalyst to form HCFC-133a as the major product and HFC-134a as the minor product (Elsheikh et al., 2005). The HFC-134a is then separated out using distillation and the HCFC-133a is recycled back through the reactor (Elsheikh et al., 2005).

B.1.2.2 Incorporating into a Formulation, Mixture or Reaction Product

Incorporation into a formulation, mixture or reaction product refers to the process of mixing or blending of several raw materials to obtain a single product or preparation. The uses of TCE that may require incorporation into a formulation include adhesives, sealants, coatings and lubricants. TCE-specific formulation processes were not identified; however, several Emission Scenario Documents (ESDs) published by the OECD have been identified that provide general process descriptions for these types of products. The formulation of coatings typically involves dispersion, milling, finishing and filling into final packages (OECD, 2009b). Adhesive formulation involves mixing together volatile and non-volatile chemical components in sealed, unsealed or heated processes (OECD, 2009a). Sealed processes are most common for adhesive formulation because many adhesives are designed to set or react when exposed to ambient conditions (OECD, 2009a). Lubricant formulation typically involves the blending of two or more components, including liquid and solid additives, together in a blending vessel (OECD, 2004).

B.1.2.3 Repackaging

EPA has not identified specific information for the repackaging of TCE. EPA expects repackaging sites receive the chemical in bulk containers and transfer the chemical from the bulk container into another smaller container in preparation for distribution in commerce.

B.1.2.4 Recycling

TRI data from 2015 indicate that some sites ship TCE for off-site recycling. EPA did not identify TCE-specific information for recycling; however, a general description of waste solvent recovery processes was identified. Waste solvents are generated when the solvent stream becomes contaminated with suspended and dissolved solids, organics, water or other substance (U.S. EPA, 1980a). Waste solvents can be restored to a condition that permits reuse via solvent reclamation/recycling (U.S. EPA, 1980a). The recovery process involves an initial vapor recovery (e.g., condensation, adsorption and absorption) or mechanical separation (e.g., decanting, filtering, draining, setline and centrifuging) step followed by distillation, purification and final packaging (U.S. EPA, 1980a). Figure_Apx B-1 illustrates a typical solvent recovery process flow diagram (U.S. EPA, 1980a).

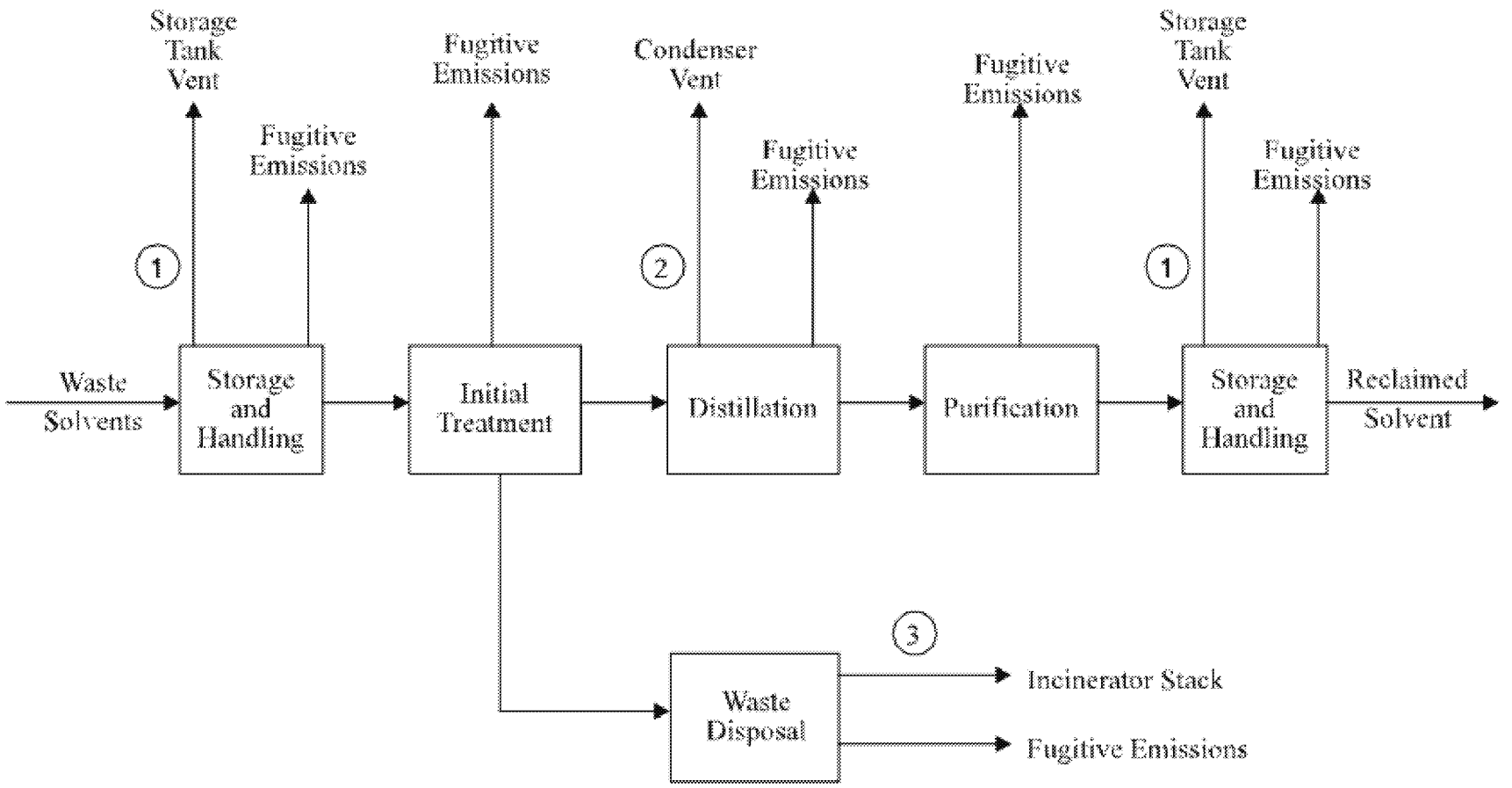

Figure_Apx B-1. General Process Flow Diagram for Solvent Recovery Processes

ED_004056A_00072837-00098

B.1.3 Uses

EPA assessed inhalation risks from TCE in vapor and aerosol degreasing, spot cleaning at dry cleaning facilities and arts and craft uses (U.S. EPA, 2014c) and also completed four supplemental analyses as identified in Section 1.2. Based on these analyses, EPA published two proposed rules to address the unreasonable risks presented by TCE use in vapor degreasing and in commercial and consumer aerosol degreasing and for spot cleaning at dry cleaning facilities (82 FR 7432, January 19, 2017; 81 FR 91592, December 16, 2016). Scenarios previously examined in the 2014 publication will be considered in this risk evaluation to ensure previous assessments are in alignment with the Procedures for Chemical Risk Evaluation under the Amended Toxic Substances Control Act (40 CFR Part 702).

B.1.3.1 Solvent for Cleaning or Degreasing

Vapor Degreasing

This scenario was previously assessed in the 2014 risk assessment (U.S. EPA, 2014c). Vapor degreasing is a process used to remove dirt, grease and surface contaminants in a variety of metal cleaning industries. Vapor degreasing may take place in batches or as part of an in-line (i.e., continuous) system. Vapor degreasing equipment can generally be categorized into one of three degreaser types described below:

Batch vapor degreasers: In batch machines, each load (parts or baskets of parts) is loaded into the machine after the previous load is completed. Individual organizations, regulations and academic studies have classified batch vapor degreasers differently. For the purposes of the scope document (Scope Document), EPA categories the batch vapor degreasers into five types: open top vapor degreasers (OTVDs); OTVDs with enclosures; closed-loop degreasing systems (airtight); airless degreasing systems (vacuum drying); and airless vacuum-to-vacuum degreasing systems.

- Open top vapor degreasers (OTVD) – In OTVDs, a vapor cleaning zone is created by heating the liquid solvent in the OTVD causing it to volatilize. Workers manually load or unload fabricated parts directly into or out of the vapor cleaning zone. The tank usually has chillers along the side of the tank to prevent losses of the solvent to the air. However, these chillers are not able to eliminate emissions, and throughout the degreasing process significant air emissions of the solvent can occur. These air emissions can cause issues with both worker health and safety as well as environmental issues. Additionally, the cost of replacing solvent lost to emissions can be expensive (NEWMOA, 2001). Figure_Apx B-2 illustrates a standard OTVD.

ED_004056A_00072837-00099

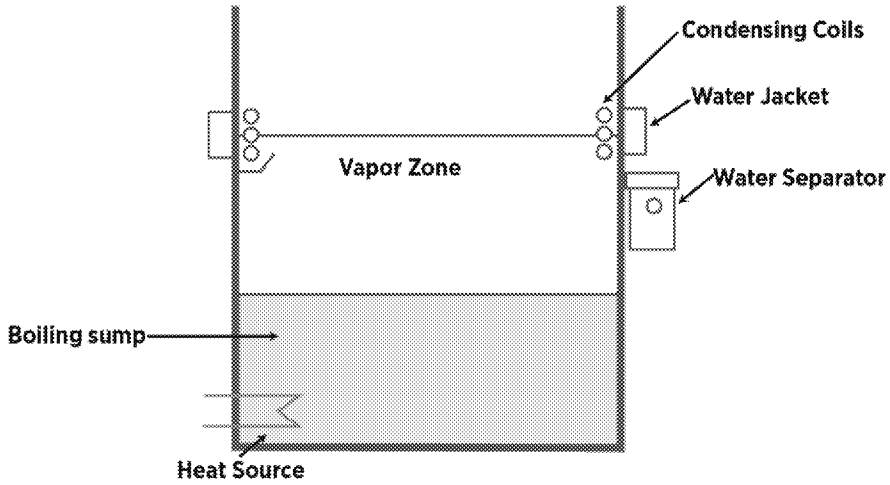

Figure_Apx B-2. Open Top Vapor Degreaser

- OTVD with enclosure – OTVDs with enclosures operate the same as standard OTVDs except that the OTVD is enclosed on all sides during degreasing. The enclosure is opened and closed to add or remove parts to/from the machine, and solvent is exposed to the air when the cover is open. Enclosed OTVDs may be vented directly to the atmosphere or first vented to an external carbon filter and then to the atmosphere (EPA, 2004). Figure_Apx B-3 illustrates an OTVD with an enclosure. The dotted lines in Figure_Apx B-3 represent the optional carbon filter that may or may not be used with an enclosed OTVD.

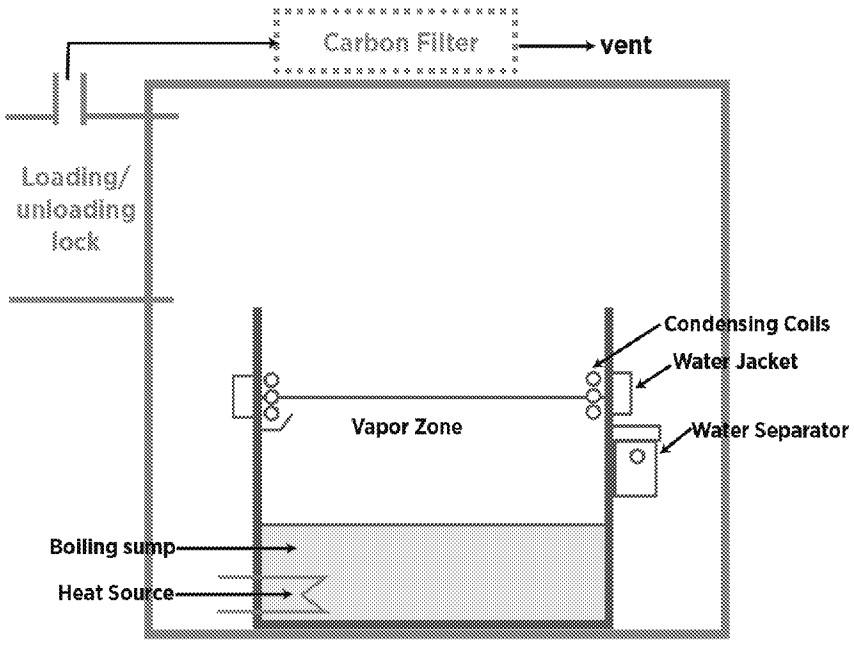

Figure_Apx B-3. Open Top Vapor Degreaser with Enclosure

- Closed-loop degreasing system (Airtight) – In closed-loop degreasers, parts are placed into a basket, which is then placed into an airtight work chamber. The door is closed and solvent vapors are sprayed onto the parts. Solvent can also be introduced to the parts as a liquid spray or liquid

immersion. When cleaning is complete, vapors are exhausted from the chamber and circulated over a cooling coil where the vapors are condensed and recovered. The parts are dried by forced hot air. Air is circulated through the chamber and residual solvent vapors are captured by carbon adsorption. The door is opened when the residual solvent vapor concentration has reached a specified level (Kanegsberg and Kanegsberg, 2011). Figure_Apx B-4 illustrates a standard closed-loop vapor degreasing system.

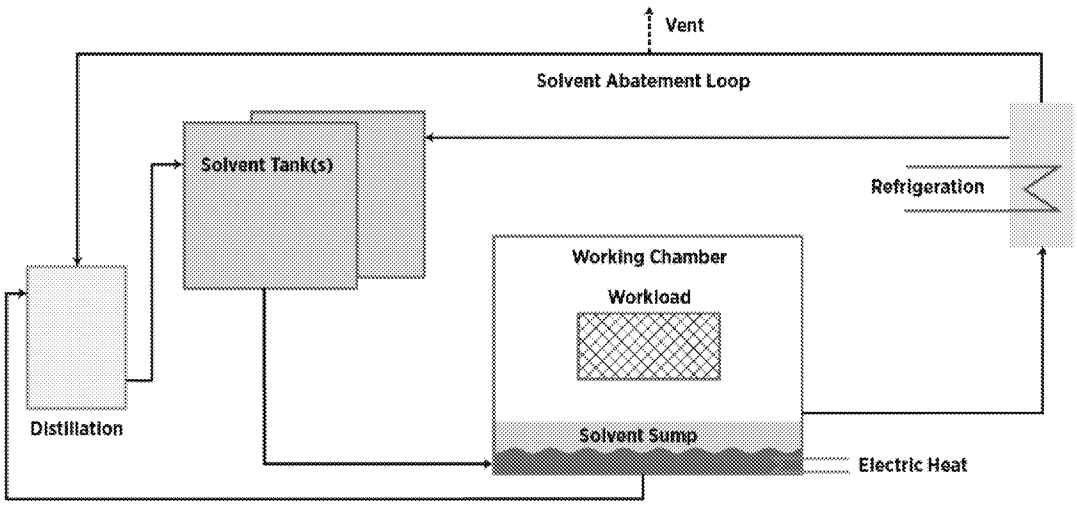

Figure_Apx B-4. Closed-loop/Vacuum Vapor Degreaser

- Airless degreasing system (vacuum drying) – Airless degreasing systems are also sealed, closed-loop systems, but remove air at some point of the degreasing process. Removing air typically takes the form of drawing vacuum, but could also include purging air with nitrogen at some point of the process (in contrast to drawing vacuum, a nitrogen purge operates at a slightly positive pressure). In airless degreasing systems with vacuum drying only, the cleaning stage works similarly as with the airtight closed-loop degreaser. However, a vacuum is generated during the drying stage, typically below 5 torr (5 mmHg). The vacuum dries the parts and a vapor recovery system captures the vapors (EPA, 2001; (Kanegsberg and Kanegsberg, 2011); (NEWMOA, 2001).

- Airless vacuum-to-vacuum degreasing system – Airless vacuum-to-vacuum degreasers are true "airless" systems because the entire cycle is operated under vacuum. Typically, parts are placed into the chamber, the chamber sealed, and then vacuum drawn within the chamber. The typical solvent cleaning process is a hot solvent vapor spray. The introduction of vapors in the vacuum chamber raises the pressure in the chamber. The parts are dried by again drawing vacuum in the chamber. Solvent vapors are recovered through compression and cooling. An air purge then purges residual vapors over an optional carbon adsorber and through a vent. Air is then introduced in the chamber to return the chamber to atmospheric pressure before the chamber is opened (Durkee, 2014; NEWMOA, 2001).

The general design of vacuum vapor degreasers and airless vacuum degreasers is similar as illustrated in Figure_Apx B-7 for closed-loop systems except that the work chamber is under vacuum during various stages of the cleaning process.

Conveyorized Vapor Degreasers
Conveyorized vapor degreasing systems are solvent cleaning machines that use an automated parts handling system, typically a conveyor, to automatically provide a continuous supply of parts to be cleaned. Conveyorized degreasing systems are usually fully enclosed except for the conveyor inlet and outlet portals. Conveyorized degreasers are likely used in similar shop types as batch vapor degreasers except for repair shops, where the number of parts being cleaned is likely not large enough to warrant the use of a conveyorized system. There are seven major types of conveyorized degreasers: monorail degreasers, cross-rod degreasers, vibra degreasers, ferris wheel degreasers, belt degreasers, strip degreasers and circuit board degreasers (U.S. EPA, 1977).

- Monorail Degreasers – Monorail degreasing systems are typically used when parts are already being transported throughout the manufacturing areas by a conveyor (U.S. EPA, 1977). They use a straight-line conveyor to transport parts into and out of the cleaning zone. The parts may enter one side and exit and the other or may make a 180° turn and exit through a tunnel parallel to the entrance (U.S. EPA, 1977). Figure_Apx B-5 illustrates a typical monorail degreaser (U.S. EPA, 1977).

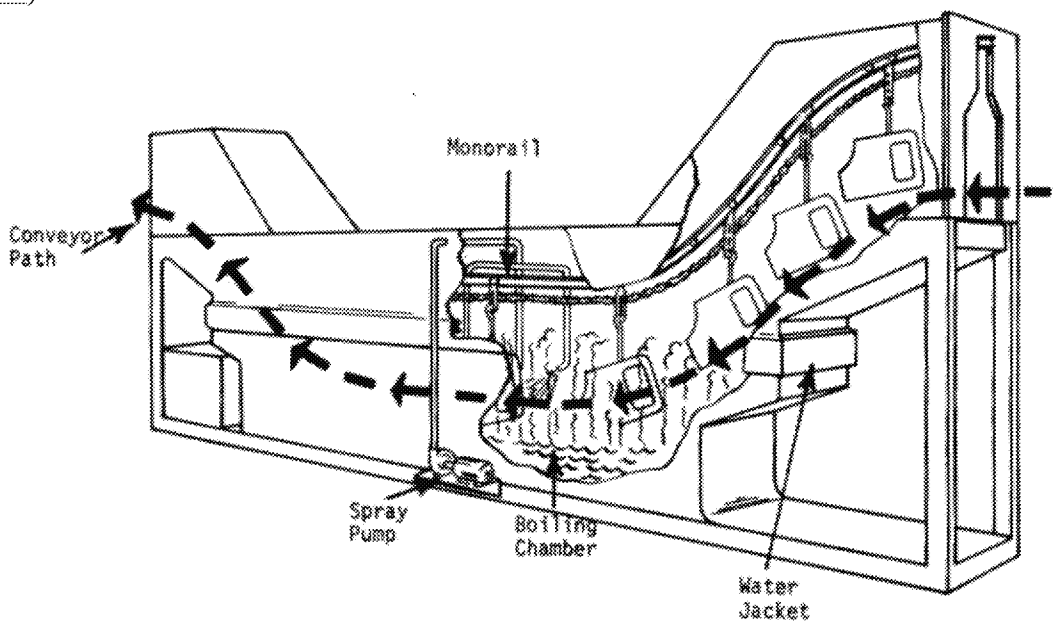

Figure_Apx B-5. Monorail Conveyorized Vapor Degreasing System (U.S. EPA, 1977)

- Cross-rod Degreasers – Cross-rod degreasing systems utilize two parallel chains connected by a rod that support the parts throughout the cleaning process. The parts are usually loaded into perforated baskets or cylinders and then transported through the machine by the chain support system. The baskets and cylinders are typically manually loaded and unloaded (U.S. EPA, 1977). Cylinders are used for small parts or parts that need enhanced solvent drainage because of crevices and cavities. The cylinders allow the parts to be tumbled during cleaning and drying and thus increase cleaning and drying efficiency. Figure_Apx B-6 illustrates a typical cross-rod degreaser (U.S. EPA, 1977).

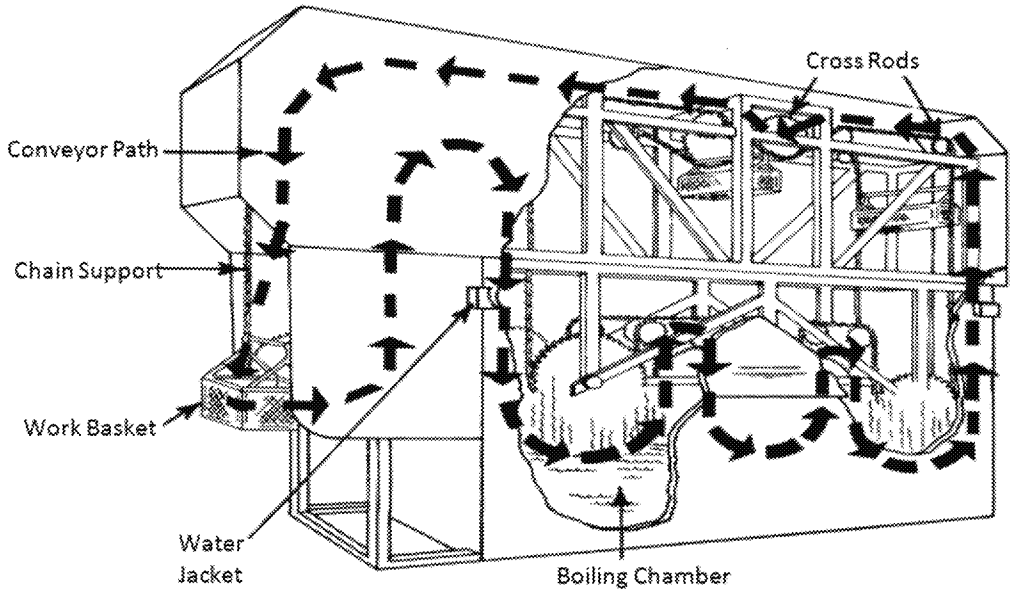

Figure_Apx B-6. Cross-Rod Conveyorized Vapor Degreasing System (U.S. EPA, 1977)

- Vibra Degreasers – In vibra degreasing systems, parts are fed by conveyor through a chute that leads to a pan flooded with solvent in the cleaning zone. The pan and the connected spiral elevator are continuously vibrated throughout the process causing the parts to move from the pan and up a spiral elevator to the exit chute. As the parts travel up the elevator, the solvent condenses and the parts are dried before exiting the machine (U.S. EPA, 1977). Figure_Apx B-7 illustrates a typical vibra degreaser (U.S. EPA, 1977).

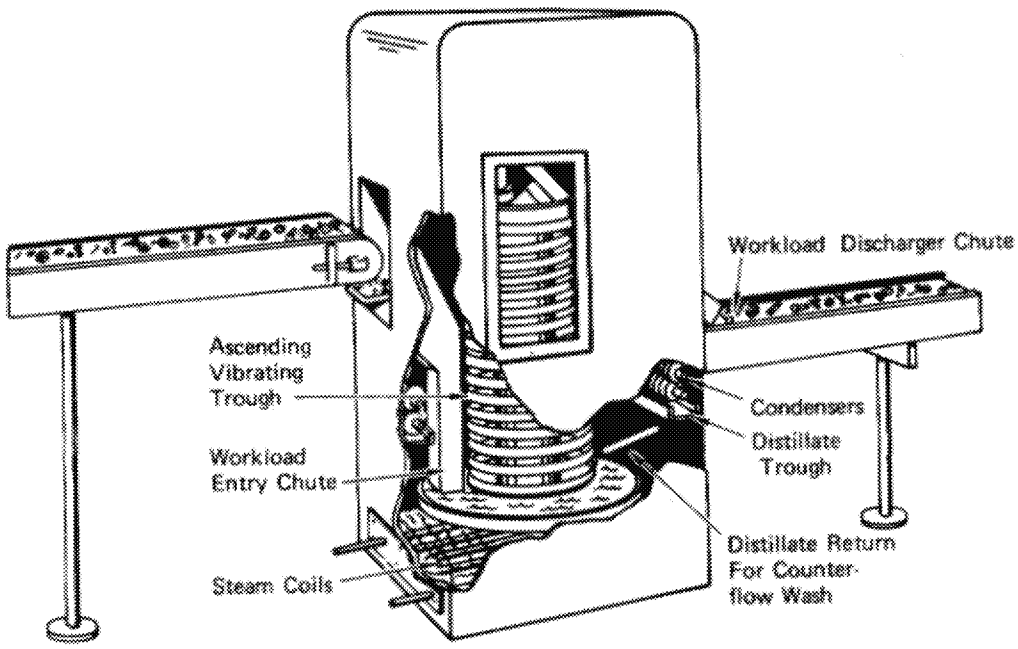

Figure_Apx B-7. Vibra Conveyorized Vapor Degreasing System (U.S. EPA, 1977)

- Ferris wheel degreasers – Ferris wheel degreasing systems are generally the smallest of all the conveyorized degreasers (U.S. EPA, 1977). In these systems, parts are manually loaded into perforated baskets or cylinders and then rotated vertically through the cleaning zone and back out. Figure_Apx B-8 illustrates a typical ferris wheel degreaser (U.S. EPA, 1977).

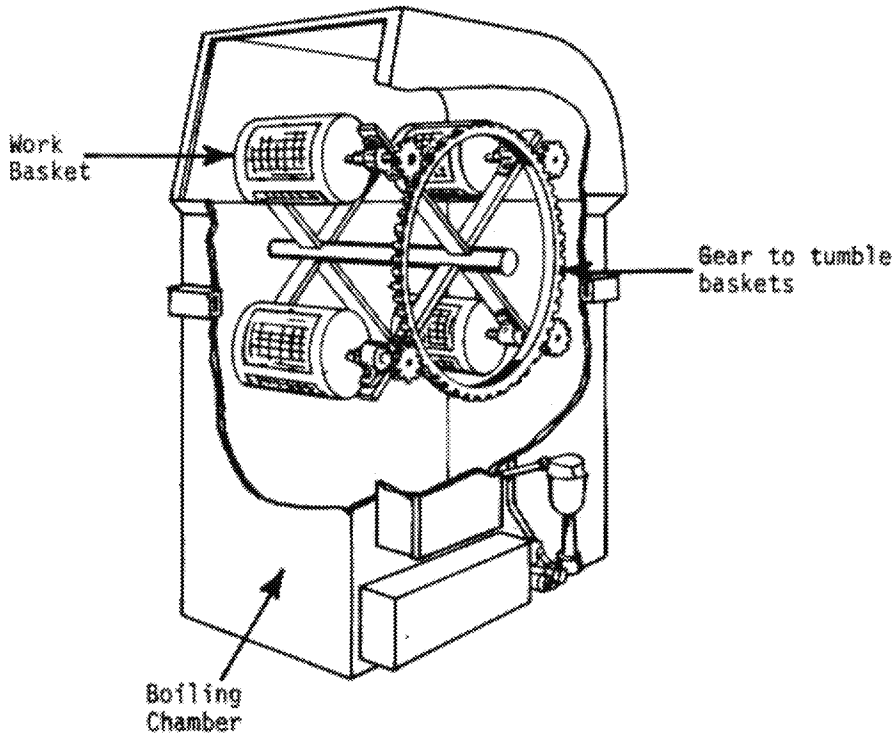

Figure_Apx B-8. Ferris Wheel Conveyorized Vapor Degreasing System (U.S. EPA, 1977)

- Belt degreasers – Belt degreasing systems (similar to strip degreasers; see next bullet) are used when simple and rapid loading and unloading of parts is desired (U.S. EPA, 1977). Parts are loaded onto a mesh conveyor belt that transports them through the cleaning zone and out the other side. Figure_Apx B-9 illustrates a typical belt or strip degreaser (U.S. EPA, 1977).

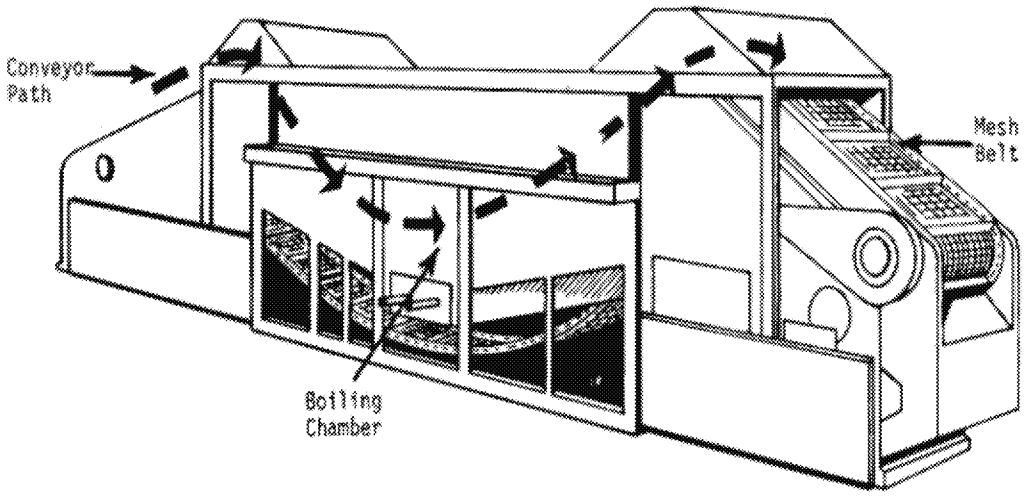

Figure_Apx B-9. Belt/Strip Conveyorized Vapor Degreasing System (U.S. EPA, 1977)

- Strip degreasers – Strip degreasing systems operate similar to belt degreasers except that the belt itself is being cleaned rather than parts being loaded onto the belt for cleaning. Figure_Apx B-9 illustrates a typical belt or strip degreaser (U.S. EPA, 1977).

- Circuit board cleaners – Circuit board degreasers use any of the conveyorized designs. However, in circuit board degreasing, parts are cleaned in three different steps due to the manufacturing processes involved in circuit board production (U.S. EPA, 1977).

Continuous web vapor degreasers: Continuous web cleaning machines are a subset of conveyorized degreasers but differ in that they are specifically designed for cleaning parts that are coiled or on spools such as films, wires and metal strips (Kanegsberg and Kanegsberg, 2011); U.S. EPA, 2006b). In continuous web degreasers, parts are uncoiled and loaded onto rollers that transport the parts through the cleaning and drying zones at speeds greater than 11 feet per minute (U.S. EPA, 2006c). The parts are then recoiled or cut after exiting the cleaning machine (Kanegsberg and Kanegsberg, 2011). Figure_Apx B-10 illustrates a typical continuous web cleaning machine.

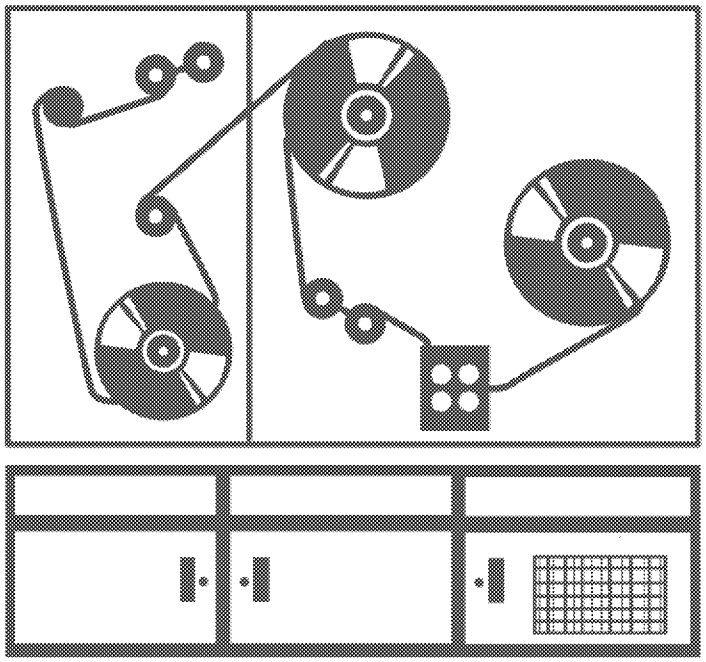

Figure_Apx B-10. Continuous Web Vapor Degreasing System

Cold Cleaners

TCE can also be used as a solvent in cold cleaners, which are non-boiling solvent degreasing units. Cold cleaning operations include spraying, brushing, flushing and immersion; the use process and worker activities associated with cold cleaning have been previously described in EPA's TCE Risk Assessment (U.S. EPA, 2014a).

Aerosol Spray Degreasers and Cleaners

EPA assessed inhalation risks from TCE in vapor and aerosol degreasing, spot cleaning at dry cleaning facilities and arts and craft uses (U.S. EPA, 2014a)) and completed four supplemental analyses Table 1-11. Based on these analyses, EPA published two proposed rules to address the unreasonable risks presented by TCE use in vapor degreasing and in commercial and consumer aerosol degreasing and for

spot cleaning at dry cleaning facilities (82 FR 7432, January 19, 2017; 81 FR 91592, December 16, 2016).

Aerosol degreasing is a process that uses an aerosolized solvent spray, typically applied from a pressurized can, to remove residual contaminants from fabricated parts. Products containing TCE may be used in aerosol degreasing applications such as brake cleaning, engine degreasing and metal product cleaning. This use has been previously described in EPA's 1-BP Draft Risk Assessment (U.S. EPA, 2016g). Aerosol degreasing may occur at either industrial facilities or at commercial repair shops to remove contaminants on items being serviced. Aerosol degreasing products may also be purchased and used by consumers for various applications.

Non-Aerosol Degreasing and Cleaning

TCE can also be used as a solvent in non-aerosol degreasing and cleaning products. Non-aerosol cleaning products typically involve dabbing or soaking a rag with cleaning solution and then using the rag to wipe down surfaces or parts to remove contamination (U.S. EPA, 2014a). The cleaning solvent is usually applied in excess and allowed to air-dry (U.S. EPA, 2014a). Parts may be cleaned in place or removed from the service item for more thorough cleaning (U.S. EPA, 2014a).

B.1.3.2 Lubricants and Greases

The Use Document for TCE [EPA-HQ-OPPT-2016-0737-0003 (U.S. EPA, 2017c)] identified TCE in penetrating lubricants and tap and die fluids. EPA has not identified process information specific to tap and die fluids; however, the OECD ESD on Use of Metalworking Fluids provides a general process description for metalworking fluids. Metalworking fluids are unloaded, either diluted with water and transferred to the trough or directly transferred to the trough without dilution (OECD, 2011). The fluid is then pumped from the trough and applied to the metal parts, as needed, during shaping (OECD, 2011). Parts are then allowed to drip dry and the fluids are collected and treated with other process fluids (OECD, 2011). Parts may be rinsed down or wiped and then cleaned via alkaline cleaning or degreasing prior to the final finishing operations (OECD, 2011). Any metalworking fluid residue remaining on the part is removed during the cleaning or degreasing operation (OECD, 2011).

EPA has not identified process-specific information regarding the use of TCE in penetrating lubricants. More information on this use will be gathered through expanded literature searches in subsequent phases of the risk evaluation process.

B.1.3.3 Adhesive and Sealants

Based on products identified in EPA's Use Document, [EPA-HQ-OPPT-2016-0737-0003 (U.S. EPA, 2017c)], TCE may be used in adhesive and sealants for industrial, commercial and consumer applications. EPA did not identify TCE-specific information for adhesive and sealant use; however, the OECD ESD for Use of Adhesives provides general process descriptions and worker activities for industrial adhesive uses. Liquid adhesives are unloaded from containers into the coating reservoir, applied to a flat or three-dimensional substrate and the substrates are then joined and allowed to cure (OECD, 2013). The majority of adhesive applications include spray, roll, curtain, syringe or bead application (OECD, 2013). For solvent-based adhesives, the volatile solvent (in this case TCE) evaporates during the curing stage (OECD, 2013). Based on EPA's knowledge of the industry, overlap in process descriptions, worker activities and application methods are expected for sealant products.

EPA's Use Document, [EPA-HQ-OPPT-2016-0737-0003 (U.S. EPA, 2017c)] indicates that adhesives and sealants containing TCE may be used in both commercial and consumer applications. EPA did not identify process information for commercial and consumer use of adhesives and sealants; EPA

anticipates that the application methods for commercial and consumer uses may include spray, brush, syringe, eyedropper, roller and bead applications.

B.1.3.4 Functional Fluids (Closed Systems)

U.S. EPA (2017f) indicates TCE may be used as a heat transfer agent in industrial and commercial applications. EPA will further evaluate the use of TCE as a heat exchange fluid during the risk evaluation process.

B.1.3.5 Cleaning and Furniture Care Products

EPA interprets this reported commercial/consumer use category in CDR "Cleaning and Furniture Care Products" to include the use of TCE in spot cleaning and carpet cleaning applications. This use includes both professional spot cleaning (dry cleaning) and carpet cleaning activities as well as use in consumer purchased spot cleaning and carpet cleaning products.

Professional spot cleaning was previously assessed in the 2014 risk assessment (U.S. EPA, 2014c). Spot cleaning products can be applied to the garment either before or after the garment is dry cleaned. The process and worker activities associated with commercial dry cleaning and spot cleaning have been previously described in the 2014 risk assessment (U.S. EPA, 2014c).

B.1.3.6 Paints and Coatings

Based on products identified in EPA's Use Document, [EPA-HQ-OPPT-2016-0737-0003 (U.S. EPA, 2017c)], TCE may be used in various paints and coatings for industrial, commercial and consumer applications. EPA did not identify TCE specific information for paints and coating use; however, several OECD ESDs and EPA generic scenarios provide general process descriptions and worker activities for industrial and commercial uses. Typical coating applications include manual application with roller or brush, air spray systems, airless and air-assisted airless spray systems, electrostatic spray systems, electrodeposition/electrocoating and autodeposition, dip coating, curtain coating systems, roll coating systems and supercritical carbon dioxide systems (OECD, 2009b). After application, solvent-based coatings typically undergo a drying stage in which the solvent evaporates from the coating (OECD, 2009b).

B.1.3.7 Corrosion Inhibitors and Anti-Scaling Agents

In the 2016 CDR (U.S. EPA, 2016a), one submitter reported the use of TCE in corrosion inhibitors and anti-scaling agents in soap, cleaning compound, and toilet preparation manufacturing. The U.S. EPA Trichloroethylene Market and Use Report (U.S. EPA, 2017f) identified TCE as a component in commercial and consumer battery coat products. Battery coat products form a coating that protects against corrosion on battery terminals, cables, clamps, and hold-downs (U.S. EPA, 2017f).

B.1.3.8 Processing Aid

The U.S. EPA Trichloroethylene Market and Use Report (U.S. EPA, 2017f) identified uses of TCE as a process solvent in lithium ion battery manufacture, polymer fiber spinning, fluoroelastomer manufacture, Alacantara manufacture, and pulverized sulfur production; as a extractant in caprolactam manufacture, in the recovery of fat-free glues in tanneries, in wood resin extraction, in the recovery of wax and paraffin from refuse, for tin recovery from scrap metal, and phenol extraction from wastewater; and as a precipitant for beta-cyclodextrin manufacture (Baumann et al., 2008a) indicates TCE is used in the manufacture of microporous polyethylene battery separator material to remove excess oil from the extruded polyethylene sheets.

B.1.3.9 Ink, Toner and Colorant Products

Based on products identified in EPA's Use Document, EPA-HQ-OPPT-2016-0737-0003 (U.S. EPA, 2017c)] and the U.S. EPA Trichloroethylene Market and Use Report (U.S. EPA, 2017f), TCE may be used as a component in a toner aid to improve image opacity, develop higher resolutions, and enhance detail clarity. The GS for Use of PMN Component in Toner Used in Photocopiers (1992) provides general process description for the use of toner. Toners are received in plastic cartridges and workers remove seal on the cartridge and place it into the photocopier (U.S. EPA, 1992). Toner is applied to the image area of the paper through electrostatic transfer (U.S. EPA, 1992). Waste toner is disposed to municipal landfills and spent cartridges are sent back to the manufacturer or distributor for reuse (U.S., 1992).

B.1.3.10 Other Uses

Based on products identified in EPA's Use Document, [EPA-HQ-OPPT-2016-0737-0003 (U.S. EPA, 2017c)], a variety of other uses may exist for TCE, including use in hoof polish, pepper spray and as a toner aide. It is unclear at this time the total volume of TCE used in any of these applications. EPA has not identified any information to further refine the use of TCE in these products at this time; more information on these uses will be gathered through expanded literature searches in subsequent phases of the risk evaluation process.

B.1.4 Disposal

Federal regulations prevent land disposal of various chlorinated solvents (including TCE) (ATSDR, 2014a). The recommended disposal method is mixing with a combustible fuel followed by incineration (ATSDR, 2014a). In incineration, complete combustion is necessary to prevent phosgene or other toxic byproduct formation (ATSDR, 2014a).

B.2 Occupational Exposure Data

EPA presents below an example of occupational exposure-related information from the preliminary data gathering. EPA will consider this information and data in combination with other data and methods for use in the risk evaluation.

Table_Apx B-1 summarizes the TCE OSHA CEHD data by NAICS code and Table_Apx B-2 summarizes NIOSH HHE data.

ED_004056A_00072837-00108

Table_Apx B-1. Mapping of Scenarios to Industry Sectors with TCE Personal Monitoring Air Samples Obtained from OSHA Inspections Conducted Between 2002 and 2017

Release/ Exposure Scenario	NAICS Code	NAICS Description
Unknown, company inspected is an excavation contractor, possibly from contact with soil contaminated with TCE	236220	Commercial and Institutional Building Construction
Textile pre-treatment, textile dyeing, or textile finishing	313312	Textile and Fabric Finishing (except Broadwoven Fabric) Mills
Textile pre-treatment or textile finishing	313320	Fabric Coating Mills
Textile pre-treatment, textile dyeing, or textile finishing	314999	All Other Miscellaneous Textile Product Mills
Manufacture of large, rigid plastic products (as vapor degreaser)	325212	Synthetic Rubber Manufacturing
Formulation of aerosol and non-aerosol products	325520	Adhesive Manufacturing
Aerosol use of mold release or other miscellaneous industrial, commercial, and consumer uses (Foam Blowing Agent)	326150	Urethane and Other Foam Product (except Polystyrene) Manufacturing
Manufacture of large, rigid plastic products (likely as adhesive or vapor degreaser) or Aerosol use of mold release	326199	All Other Plastics Product Manufacturing
Manufacture of large, rigid plastic products	326211	Tire Manufacturing (except Retreading)
Manufacture of large, rigid plastic products (as a vapor degreaser or paint/coating)	326299	All Other Rubber Product Manufacturing
Vapor degreasing or cold cleaning	331210	Iron and Steel Pipe and Tube Manufacturing from Purchased Steel
Vapor degreasing or cold cleaning	331491	Nonferrous Metal (except Copper and Aluminum) Rolling, Drawing, and Extruding
Vapor degreasing or cold cleaning	331512	Steel Investment Foundries
Vapor degreasing or cold cleaning	331528	Beryllium castings (except die-castings), unfinished manufacturing
Vapor degreasing or cold cleaning	332116	Metal stampings (except automotive, cans, cooking, closures, crowns), unfinished, manufacturing
Vapor degreasing or cold cleaning	332439	Other Metal Container Manufacturing
Vapor degreasing or cold cleaning or metalworking fluids	332710	Machine Shops
Vapor degreasing or cold cleaning	332721	Precision Turned Product Manufacturing
Vapor degreasing or cold cleaning	332722	Bolt, Nut, Screw, Rivet, and Washer Manufacturing
Vapor degreasing or cold cleaning	332811	Metal Heat Treating
Vapor degreasing or cold cleaning	332813	Electroplating, Plating, Polishing, Anodizing, and Coloring
Vapor degreasing or cold cleaning	332991	Ball and Roller Bearing Manufacturing
Vapor degreasing or cold cleaning	332994	Small Arms, Ordnance, and Ordnance Accessories Manufacturing
Vapor degreasing or cold cleaning	332996	Fabricated Pipe and Pipe Fitting Manufacturing
Vapor degreasing or cold cleaning	332999	All Other Miscellaneous Fabricated Metal Product Manufacturing
Vapor degreasing or cold cleaning	333111	Farm Machinery and Equipment Manufacturing
Vapor degreasing or cold cleaning	333513	Arbor presses, metalworking, manufacturing
Vapor degreasing or cold cleaning	334412	Bare Printed Circuit Board Manufacturing
Vapor degreasing or cold cleaning	334419	Other Electronic Component Manufacturing

Release/ Exposure Scenario	NAICS Code	NAICS Description
Vapor degreasing or cold cleaning	334513	Instruments and Related Products Manufacturing for Measuring, Displaying, and Controlling Industrial Process Variables
Vapor degreasing or cold cleaning	335311	Power, Distribution, and Specialty Transformer Manufacturing
Vapor degreasing or cold cleaning	336370	Motor Vehicle Metal Stamping
Vapor degreasing or cold cleaning	339114	Dental Equipment and Supplies Manufacturing
Industrial adhesive (unknown application type)	339950	Sign Manufacturing
Vapor degreasing or cold cleaning	339991	Gasket, Packing, and Sealing Device Manufacturing
Paints and Coatings (application method unknown)	423830	Industrial Machinery and Equipment Merchant Wholesalers
Commercial automotive repair/servicing	424610	Plastics Materials and Basic Forms and Shapes Merchant Wholesalers
Spot cleaning	812320	Drycleaning and Laundry Services (except Coin-Operated)
Spot cleaning	812332	Industrial Launderers
Unknown – this seems to be for OSHA inspectors which could have been collected during site inspections	926150	Regulation, Licensing, and Inspection of Miscellaneous Commercial Sectors
Other miscellaneous industrial, commercial, and consumer uses (atmospheric chamber cleaner)	927110	Space Research and Technology

ED_004056A_00072837-00110

Table_Apx B-2. Summary of Exposure Data from NIOSH HHEs [a]

Data Source	Report Number	Exposure/Release Scenario	Facility Description	Number of Exposure Samples	Minimum of Exposure Values (ppm)	Maximum of Exposure Values (ppm)	Comments
NIOSH, 1991	HETA-1990-0344-2159	Vapor degreasing	Brass and stainless steel valve manufacture	7	1.1	5.3	Two PBZ full-shift samples and five area full-shift samples
NIOSH, 1992a	HETA-1990-0029-2212	Adhesive application	Automotive headliner production	4	2.7	21.4	PBZ samples
NIOSH, 1992b	HETA-1990-0223-2211	Vapor degreasing	Television picture tubes (i.e., cathode ray tubes)	11	ND	50	Partial shift PBZ and area samples
NIOSH, 1995	HETA-1994-0298-2499	Rubber stock mixing	Automotive vibration control and vibration sealing manufacture	Unknown	Trace		Exact use of TCE is not specified and is only detected at trace levels.
NIOSH, 1998	HETA-1997-0214-2689	Vapor degreasing	Hydraulic door closer manufacturing	2	0.71	3.5	Partial shift PBZ samples
NIOSH, 2003	HETA-2002-0184-2888	Vapor degreasing	Aluminum oil coolers (for use in army battle tank) manufacture	2	7.1	7.6	TCE vapor degreaser was not in operation at time of site visit. PBZ full-shift samples taken of welders; exposure likely residual TCE on parts that vaporized during welding.
NIOSH, 2004	HETA-2003-0029-2923	Wipe cleaning	Musical instrument repair	6	Trace (>0.0143 and <0.0477)	0.99	Two PBZ and four area samples.
NIOSH, 2005	HETA-2003-0203-2952	Wipe cleaning	Printing press operations	26	ND (<0.00005)	25	20 full-shift PBZ and six task-based PBZ samples.
NIOSH, 2008	HETA-2004-0372-3054	Battery manufacturing	Oil extraction during battery separator manufacturing	274	1.7	130	Full shift PBZ samples

ND = not detected
PBZ = personal breathing zone
[a] Table includes HHEs identified to date

B.3 References Related to Risk Evaluation – Environmental Release and Occupational Exposure

Table_Apx B-3. Potentially Relevant Data Sources for Process Description Related Information for TCE[2]

Bibliography	url
Cohen, C. and A. L. Frank (1994). "Liver disease following occupational exposure to 1,1,1-trichloroethane: a case report." American Journal of Industrial Medicine **26**(2): 237-241.	(Cohen and Frank, 1994)
Stewart, P. A., et al. (1991). "Retrospective cohort mortality study of workers at an aircraft maintenance facility: II. Exposures and their assessment." British Journal of Industrial Medicine **48**(8): 531-537.	(Stewart et al., 1991)
Rasmussen, K., et al. (1993). "Solvent-induced chronic toxic encephalopathy." American Journal of Industrial Medicine **23**(5): 779-792.	(Rasmussen et al., 1993)
Doherty, R. E. (2000). "A history of the production and use of carbon tetrachloride, tetrachloroethylene, trichloroethylene and 1,1,1-trichloroethane in the United States: Part 1—historical background; carbon tetrachloride and tetrachloroethylene." Environmental Forensics **1**(2): 69-81.	(Doherty, 2000a)
Jiun-Horng, T., et al. (2008). "Volatile organic compound constituents from an integrated iron and steel facility." Journal of Hazardous Materials **157**(2-3): 569-578.	(Jiun-Horng et al., 2008)
Franco, A., et al. (2007). "Estimating risk during showering exposure to VOCs of workers in a metal-degreasing facility." Journal of Toxicology and Environmental Health, Part A: Current Issues **70**(7): 627-637.	(Franco et al., 2007)
Ikeda, M., et al. (1971). "Excretion kinetics of urinary metabolites in a patient addicted to trichloroethylene." British Journal of Industrial Medicine **28**(2): 203-206.	(Ikeda et al., 1971)
Yang, W. B., et al. (2012). "Comparative assessments of VOC emission rates and associated health risks from wastewater treatment processes." Journal of Environmental Monitoring **14**(9): 2464-2474.	(Yang et al., 2012)

[2] The data sources identified are based on preliminary results to date of the full-text screening step of the SR process. Further screening and quality control are on-going.

ED_004056A_00072837-00112

Bibliography	url
Daniels, W. J., et al. (1988). Health Hazard Evaluation Report No. HETA-86-121-1923, Modern Plating Corporation, Freeport, Illinois, Daniels, WJ; Orris, P; Kramkowski, R; Almaguer, D. **NIOSH:** 86-121.	Daniels et al. (1988b)
Dobaradaran, S., et al. (2010). "Hazardous Organic Compounds in Groundwater Near Tehran Automobile Industry." Bulletin of Environmental Contamination and Toxicology **85**(5): 530-533.	(Dobaradaran et al., 2010)
Doherty, R. E. (2000). "A history of the production and use of carbon tetrachloride, tetrachloroethylene, trichloroethylene and 1,1,1-trichloroethane in the United States: Part 2 - Trichloroethylene and 1,1,1-trichloroethane." Environmental Forensics **1**(2): 83-93.	(Doherty, 2000b)
Baumann, A., et al. (2008). Evaluation of Neurological Dysfunction among Workers Exposed to Trichloroethylene, Baumann, A; Page, E; Mueller, C; Burr, G; Hitchcock, E.	(Baumann et al., 2008a)
NIOSH (1997). Control of health and safety hazards in commercial drycleaners: chemical exposures, fire hazards, and ergonomic risk factors. Education and Information Division. Atlanta, GA.	NIOSH (1997)
OECD (2009). Emission scenario document on adhesive formulation. Paris, France.	OECD (2009a)
U.S. EPA (1995). Guidance document for the halogenated solvent cleaner NESHAP. Research Triangle Park, NC, Office of Air Quality Planning and Standards, Information Transfer and Program Integration Division, Control Technology Center, Federal Small Business Assistance Program.	U.S. EPA (1995)
ATSDR (2014). Draft toxicological profile for trichloroethylene. Atlanta, GA.	ATSDR (2014a)
OECD (2009). Emission scenario documents on coating industry (paints, lacquers and varnishes). Paris, France.	OECD (2009b)
OECD (2015). Emission scenario document on use of adhesives. Paris, France.	(OECD, 2015)
Love, J. R. and M. Kern (1981). Health hazard evaluation report no. HETA-81-065-938, METRO Bus Maintenance Shop, Washington,	Love and Kern (1981)

ED_004056A_00072837-00113

Bibliography	url
DC. Cincinnati, OH, National Institue for Occupational Safety and Health.	
Marshall, K. A. and L. H. Pottenger (2004). Chlorocarbons and chlorohydrocarbons.	Marshall and Pottenger (2004)
Snedecor, G., et al. (2004). Chloroethylenes and chloroethanes.	(Snedecor et al., 2004a)
U.S. EPA (1980). Waste solvent reclamation. AP-42. Compilation of air pollutant emission factors. Research Triangle Park, NC, Office of Air and Radiation, Office of Air Quality and Planning Standards.	U.S. EPA (1980b)
NIOSH (1992). Health hazard evaluation report no. HETA-90-223-2211, Thomson Consumer Electronics, Marion, Indiana. Cincinnati, OH.	(NIOSH, 1992)
Rosensteel, R. E. and J. B. Lucas (1975). Health hazard evaluation report no. HHE 74-28-212, Westinghouse Air Brake Company, Wilmerding, Pennsyvlania. Cincinnati, OH, National Institute for Occupational Safety and Health.	Rosensteel and Lucas (1975)
Burton, N. C. and J. Monesterskey (1996). Health hazard evaluation report no. HETA 96-0135-2612, Eagle Knitting Mills, Inc., Shawano, Wisconsin. Cincinnati, OH, National Institute for Occupational Safety and Health.	Burton and Monesterskey (1996)
Ruhe, R. L. (1982). Health hazard evaluation report no. HETA 82-040-119, Synthes Ltd. (USA), Monument, Colorado. Cincinnati, OH, National Institute for Occupational Safety and Health.	Ruhe (1982)
Baumann, A., et al. (2008). Health hazard evaluation report no. HETA 2004-0372-3054, Evaluation of neurological dysfunction among workers exposed to trichloroethylene, Entek International, Lebanon, Oregon. Cincinnati, OH, National Institute for Occupational Safety and Health.	(Baumann et al., 2008b)
Okawa, M. T. (1973). Health hazard evaluation report no. HHE 72-74-51, Western Electric Company, Dublic, California. Cincinnati, OH, National Institute for Occupational Safety and Health.	(Okawa, 1973)

ED_004056A_00072837-00114

Bibliography	url
Okawa, M. T. (1975). Health hazard evaluation report no. HHE 74-96-173, Richdel Corporation, Carson City, Nevada. Cincinnati, OH, National Institute for Occupational Safety and Health.	Okawa (1975)
Kinnes, G. M. and R. R. Hammel (1990). Health hazard evaluation report no. HETA 88-357-2042, A. W Cash Valve Manufacturing Corp., Decatur, Illinois. Cincinnati, OH, National Institute for Occupational Safety and Health.	Kinnes and Hammel (1990)
Kominsky, J. R. (1976). Health hazard evaluation report no. HHE 76-24-350, Dana Corporation, Tipon, Indiana. Cincinnati, OH, National Institute for Occupational Safety and Health.	(Kominsky, 1976b)
Johnson, P. (1980). Health hazard evaluation report no. HHE 80-48-689, Miami Carey Inc., Monroe, Ohio. Cincinnati, OH, National Institute for Occupational Safety and Health.	Johnson (1980)
Gilles, D., et al. (1977). Health hazard evaluation report no. HHE 77-12-418, Airtex Products, Fairfield, Illinois. Cincinnati, OH, National Institute for Occupational Safety and Health.	Gilles et al. (1977)
Daniels, W., et al. (1988). Health hazard evaluation report no. HETA 86-121-1923, Modern plating Corporation, Freeport, Illinois. Cincinnati, OH, National Institute for Occupational Safety and Health.	Daniels et al. (1988a)
Snyder, E. M. (2003). Health hazard evaluation report no. HETA 2001-0150-2917, IKI Manufacturing, Edgerton, Wisconsin. Cincinnati, OH, National Institute for Occupational Safety and Health.	Snyder (2003)
Gilles, D. and E. Philbin (1976). Health hazard evaluation report no. HHE 76-61-337, TRW Incorporated, Philadelphia, Pennsylvania. Cincinnati, OH, National Institute for Occupational Safety and Health.	Gilles and Philbin (1976)
Burroughs, G. E. (1980). Health hazard evaluation report no. HHE 79-96-729, Protective Coatings Corporation, Fort Wayne, Indiana, Part 2. Cincinnati, OH, National Institute for Occupational Safety and Health.	(Burroughs, 1980b)

ED_004056A_00072837-00115

Bibliography	url
Gunter, B. J. and J. B. Lucas (1975). Health hazard evaluation report no. HHE 74-61-232, Gates Rubber Company, Denver Colorodo. Cincinnati, OH, National Institute for Occupational Safety and Health.	Gunter and Lucas (1975)
Kinnes, G. M. (1998). Health hazard evaluation report no. HETA 97-0214-2689, Dorma Door Controls, Inc., Reamstown Pennsylvania. Cincinnati, OH, National Institute for Occupational Safety and Health.	Kinnes (1998)
Burr, G. (2003). Health hazard evaluation report no. HETA 2002-0184-2888, Aero-Classics, Ltd., Huron, Ohio. Cincinnati, OH, National Institute for Occupational Safety and Health.	Burr (2003)
Gunter, B. J. (1977). Health hazard evaluation report no. HHE 76-101-376, FMC Corporation, Broomfield, Colorado. Cincinnati, OH, National Institute for Occupational Safety and Health.	Gunter (1977)
Finely, M. and L. Tapp (2004). Health hazard evaluation report no. HETA 2003-0029-2923, Ward Brodt Music Mall, Madison, Wisconsin. Cincinnati, OH, National Institute for Occupational Safety and Health.	Finely and Tapp (2004)
Finely, M. and E. Page (2005). Health hazard evaluation report no. HETA 2003-0203-2952, Wallace Computer Services, Clinton, Illinois. Cincinnati, OH, National Institute for Occupational Safety and Health.	Finely and Page (2005)
Kramkowski, R. S. (1978). Health hazard evaluation report no. HHE 78-56-511, Westclox-Division of General Time Corp., Peru, Illinois. Cincinnati, OH, National Institute for Occupational Safety and Health.	
Straub, W. E. and C. Meyer (1977). Health hazard evaluation report no. HHE 77-3-420, Essex International, Kittaning, PA. Cincinnati, OH, National Institute for Occupational Safety and Health.	Straub and Meyer (1977)
Lewis, F. A. (1980). Health hazard evaluation report no. HHE 80-87-708, Harowe Servo Contorls Inc., West Chester, Pennsylvania.	(Lewis, 1980)

ED_004056A_00072837-00116

Bibliography	url
Cincinnati, OH, National Institute for Occupational Safety and Health.	
DOW Deutschland (2017). Chemical safety report: Use of trichloroethylene as extraction solvent for bitumen in asphalt analysis. Ispra, Italy, European Commission Joint Research Centre, Institute for Health and Consumer Protection, European Chemicals Bureau.	(DOW Deutschland, 2017)
Geiss, Richard , (2014). Chemical safety report: Use of trichloroethylene in formulation. Ispra, Italy, European Commission Joint Research Centre, Institute for Health and Consumer Protection, European Chemicals Bureau.	Geiss (2014a)
Geiss, Richard , (2014). Chemical safety report: Use of trichloroethylene in packaging. Ispra, Italy, European Commission Joint Research Centre, Institute for Health and Consumer Protection, European Chemicals Bureau.	Geiss (2014b)
EC (2014). Exposure scenario: Use: Trichloroethylene as an extraction solvent for removal of process oil and formation of the porous structure in polyethylene based separators used in lead-acid batteries. Ispra, Italy, European Commission Joint Research Centre, Institute for Health and Consumer Protection, European Chemicals Bureau.	(EC, 2014e)
EC (2014). Chemical safety report: Trichloroethylene. Ispra, Italy, European Commission Joint Research Centre, Institute for Health and Consumer Protection, European Chemicals Bureau.	(EC, 2014a)
Feistritz Microporous gmbh (2014). Chemical safety report: Trichloroethylene used as degreasing solvent in the manufacture of polyethylene separators for lead-acid batteries. Ispra, Italy, European Commission Joint Research Centre, Institute for Health and Consumer Protection, European Chemicals Bureau.	Feistritz Microporous gmbh (2014)
DOW Deutschland (2014). Chemical safety report: Industrial use as process chemical (enclosed systems) in Alcantara material production. Ispra, Italy, European Commission Joint Research Centre, Institute for Health and Consumer Protection, European Chemicals Bureau.	DOW Deutschland (2014a)

ED_004056A_00072837-00117

Bibliography	url
DOMO Caproleuna GmbH (2015). Chemical safety report: Industrial use as an extractive solvent for the purification of caprolactam from caprolactam oil. Ispra, Italy, European Commission Joint Research Centre, Institute for Health and Consumer Protection, European Chemicals Bureau.	DOMO Caproleuna GmbH (2015)
DOW Deutschland (2014). Chemical safety report: Use of trichloroethylene in packaging. Ispra, Italy, European Commission Joint Research Centre, Institute for Health and Consumer Protection, European Chemicals Bureau.	DOW Deutschland (2014c)
ECHA (2017). Uses at industrial sites: Trichloroethylene. Helsinki, Finland.	ECHA (2017b)
DOW Deutschland (2014). Chemical safety report: Use of trichloroethylene in industrial parts cleaning by vapour degreasing in closed systems where specific requirements (system of use-parameters) exist. Ispra, Italy, European Commission Joint Research Centre, Institute for Health and Consumer Protection, European Chemicals Bureau.	DOW Deutschland (2014b)
Chimcomplex SA Borzesti (2014). Analysis of alternatives: Industrial use of trichloroethylene (TCE) as a solvent as a degreasing agent in closed systems. Helsinki, Finland, European Chemicals Agency.	Chimcomplex SA Borzesti (2014)
ENTEK International Limited (2014). Analysis of alternatives: Use of trichloroethylene as an extraction solvent for removal of process oil and formation of the porous structure in polyethylene based separators used in lead-acid batteries. Helsinki, Finland, European Chemicals Agency.	ENTEK International Limited (2014)
Vlisco Netherlands BV (2014). Chemical safety report Part A: Use of trichloroethylene as a solvent for the removal and recovery of resin from dyed cloth. Ispra, Italy, European Commission Joint Research Centre, Institute for Health and Consumer Protection, European Chemicals Bureau.	Vlisco Netherlands BV (2014)
EC (2014). Exposure assessment: Trichloroethylene. Ispra, Italy, European Commission Joint Research Centre, Institute for Health and Consumer Protection, European Chemicals Bureau.	(EC, 2014b)

ED_004056A_00072837-00118

Bibliography	url
Parker Hannifin Manufacturing (2014). Chemical safety report: Use of trichloroethylene as a process solvent for the manufacturing of hollow fibre gas separation membranes out of polyphenylene oxide (PPO). Ispra, Italy, European Commission Joint Research Centre, Institute for Health and Consumer Protection, European Chemicals Bureau.	Parker Hannifin Manufacturing (2014)
RAG Aktiengesellschaft (2014). Chemical safety report: Trichloroethylene. Ispra, Italy, European Commission Joint Research Centre, Institute for Health and Consumer Protection, European Chemicals Bureau.	RAG Aktiengesellschaft (2014)
EC (2014). Exposure assessment: Trichloroethylene, Part 3. Ispra, Italy, European Commission Joint Research Centre, Institute for Health and Consumer Protection, European Chemicals Bureau.	(EC, 2014d)
Rulis, A., lan (2002). Agency response letter GRAS notice no. GRN 000082. Silver Spring, MD, Rulis, Alan.	Rulis (2002)
Ruhe, R. L., et al. (1981). Health hazard evaluation report no. HHE 80-49-808, Superior Tube Company, Collegeville, Pennsylvania. Cincinnati, OH, National Institute for Occupational Safety and Health.	(Ruhe et al., 1981)
NIOSH (2014). FACE Report: Three dead in confined space incident in New York (FACE 8634), CDC.	NIOSH (2014)
Okawa, M. T. (1973). Health hazard evaluation report no. HHE 72-74-51, Western Electric Company, Dublic, California. Cincinnati, OH, National Institute for Occupational Safety and Health.	(Okawa, 1973)
NIOSH (1978). NIOSH special hazard review with control recommendations: Trichloroethylene. Rockville, MD.	(CDC, 1978)
NIOSH (1973). Criteria for a recommended standard: occupational exposure to trichloroethylene.	(NIOSH, 1973)
European Chlorinated Solvents Association (ECSA) (2016). Guidance on storage and handling of chlorinated solvents.	European Chlorinated Solvents Association (ECSA) (2016)

ED_004056A_00072837-00119

Bibliography	url
U.S. EPA; ICF Consulting (2004). The U.S. solvent cleaning industry and the transition to non ozone depleting substances.	U.S. EPA; ICF Consulting (2004)
HSIA (2008). Chlorinated solvents - The key to surface cleaning performance.	(HSIA, 2008)
ATSDR (2014). Public health assessment: Technitronics site: Casselberry, Seminole County, Florida: FDEP facility ID: COM_275450: EPA facility ID: FLD007432552. Atlanta, GA.	(ATSDR, 2014b)
ATSDR (2014). Draft toxicological profile for trichloroethylene. Atlanta, GA.	(ATSDR, 2014a)
ERM (2017). Life cycle assessment of used oil management. London, UK.	ERM (2017)
ECSA (2017). Chlorinated solvents: Trichloroethylene (TRI). Brussels, Belgium.	ECSA (2017)
ECSA (2015). Product safety summary on trichloroethylene. Brussels, Belgium.	(ECSA, 2015)
ATSDR (2017). Public health assessment: Paducah gaseous diffusion plant (U.S. DOE), Paducah, McCracken County, KY. Atlanta, GA, U.S. Department of Health and Human Services, Agency for Toxic Substances and Disease Registry.	ATSDR (2017)
CT DOH (2014). Maximum contaminant level (MCL) determination for trichloroethylene. Hartford, CT, Environmental and Occupational Health Assessment Program.	(CT DOH, 2014)
FL DOH (1996). Site review and update: Piper aircraft corporation. Tallahassee, FL.	(FL DOH, 1996)
Japanese Ministry of Environment (2004). Manual for PRTR release estimation models: 1. Examples of calculation in typical processes. Tokyo, Japan, Ministry of Economy, Trade and Industry.	(Japanese Ministry of Environment, 2004a)
CDC (1978). Health hazard evaluation report no. HETA-78-38-512: Trans World Airlines Corporation. Cincinnati, OH, National Institute for Occupational Safety and Health.	CDC (1978)

ED_004056A_00072837-00120

Table_Apx B-4. Potentially Relevant Data Sources for Estimated or Measured Release Data for TCE[3]

Bibliography	url
U.S. EPA (2001). Sources, emission and exposure for trichloroethylene (TCE) and related chemicals. Govt Reports Announcements & Index. Washington, DC. **GRA and I:** 138.	U.S. EPA (2001)
Hellweg, S., et al. (2005). "Confronting workplace exposure to chemicals with LCA: examples of trichloroethylene and perchloroethylene in metal degreasing and dry cleaning." Environmental Science and Technology **39**(19): 7741-7748.	(Hellweg et al., 2005)
Jiun-Horng, T., et al. (2008). "Volatile organic compound constituents from an integrated iron and steel facility." Journal of Hazardous Materials **157**(2-3): 569-578.	(Jiun-Horng et al., 2008)
Franco, A., et al. (2007). "Estimating risk during showering exposure to VOCs of workers in a metal-degreasing facility." Journal of Toxicology and Environmental Health, Part A: Current Issues **70**(7): 627-637.	(Franco et al., 2007)
Wu, C. and J. Schaum (2000). "Exposure assessment of trichloroethylene." Environmental Health Perspectives **108**(Suppl 2): 359-363.	(Wu and Schaum, 2000)
Kargar, M., et al. (2013). "Survey of Hazardous Organic Compounds in the Groundwater, Air and Wastewater Effluents Near the Tehran Automobile Industry." Bulletin of Environmental Contamination and Toxicology **90**(2): 155-159.	(Kargar et al., 2013)
Martí, V., et al. (2014). "Human health risk assessment of a landfill based on volatile organic compounds emission, immission and soil gas concentration measurements." Applied Geochemistry **49**: 218-224.	(Martí et al., 2014)
McCulloch, A. and P. M. Midgley (1996). "The production and global distribution of emissions of trichloroethene, tetrachloroethene	(McCulloch and Midgley, 1996)

[3] The data sources identified are based on preliminary results to date of the full-text screening step of the SR process. Further screening and quality control are on-going.

ED_004056A_00072837-00121

Bibliography	url
and dichloromethane over the period 1988−1992." Atmospheric Environment **30**(4): 601-608.	
OECD (2009). Emission scenario document on adhesive formulation. Paris, France.	OECD (2009a)
U.S. EPA (1995). Guidance document for the halogenated solvent cleaner NESHAP. Research Triangle Park, NC, Office of Air Quality Planning and Standards, Information Transfer and Program Integration Division, Control Technology Center, Federal Small Business Assistance Program.	U.S. EPA (1995)
ATSDR (2014). Draft toxicological profile for trichloroethylene. Atlanta, GA.	ATSDR (2014a)
OECD (2009). Emission scenario documents on coating industry (paints, lacquers and varnishes). Paris, France.	OECD (2009b)
OECD (2015). Emission scenario document on use of adhesives. Paris, France.	(OECD, 2015)
(2014). Toxic release inventory: Trichloroethylene.	(U.S EPA, 2014)
U.S. EPA (1980). Waste solvent reclamation. AP-42. Compilation of air pollutant emission factors. Research Triangle Park, NC, Office of Air and Radiation, Office of Air Quality and Planning Standards.	U.S. EPA (1980b)
DOW Deutschland (2017). Chemical safety report: Use of trichloroethylene as extraction solvent for bitumen in asphalt analysis. Ispra, Italy, European Commission Joint Research Centre, Institute for Health and Consumer Protection, European Chemicals Bureau.	(DOW Deutschland, 2017)
Geiss, Richard , (2014). Chemical safety report: Use of trichloroethylene in formulation. Ispra, Italy, European Commission Joint Research Centre, Institute for Health and Consumer Protection, European Chemicals Bureau.	Geiss (2014a)
Geiss, Richard , (2014). Chemical safety report: Use of trichloroethylene in packaging. Ispra, Italy, European Commission Joint Research Centre, Institute for Health and Consumer Protection, European Chemicals Bureau.	Geiss (2014b)

ED_004056A_00072837-00122

Bibliography	url
EC (2014). Exposure scenario: Use: Trichloroethylene as an extraction solvent for removal of process oil and formation of the porous structure in polyethylene based separators used in lead-acid batteries. Ispra, Italy, European Commission Joint Research Centre, Institute for Health and Consumer Protection, European Chemicals Bureau.	(EC, 2014e)
EC (2014). Chemical safety report: Trichloroethylene. Ispra, Italy, European Commission Joint Research Centre, Institute for Health and Consumer Protection, European Chemicals Bureau.	(EC, 2014a)
Feistritz Microporous gmbh (2014). Chemical safety report: Trichloroethylene used as degreasing solvent in the manufacture of polyethylene separators for lead-acid batteries. Ispra, Italy, European Commission Joint Research Centre, Institute for Health and Consumer Protection, European Chemicals Bureau.	Feistritz Microporous gmbh (2014)
DOW Deutschland (2014). Chemical safety report: Industrial use as process chemical (enclosed systems) in Alcantara material production. Ispra, Italy, European Commission Joint Research Centre, Institute for Health and Consumer Protection, European Chemicals Bureau.	DOW Deutschland (2014a)
DOMO Caproleuna GmbH (2015). Chemical safety report: Industrial use as an extractive solvent for the purification of caprolactam from caprolactam oil. Ispra, Italy, European Commission Joint Research Centre, Institute for Health and Consumer Protection, European Chemicals Bureau.	DOMO Caproleuna GmbH (2015)
DOW Deutschland (2014). Chemical safety report: Use of trichloroethylene in packaging. Ispra, Italy, European Commission Joint Research Centre, Institute for Health and Consumer Protection, European Chemicals Bureau.	DOW Deutschland (2014c)
DOW Deutschland (2014). Chemical safety report: Use of trichloroethylene in industrial parts cleaning by vapour degreasing in closed systems where specific requirements (system of use-parameters) exist. Ispra, Italy, European Commission Joint Research	DOW Deutschland (2014b)

ED_004056A_00072837-00123

Bibliography	url
Centre, Institute for Health and Consumer Protection, European Chemicals Bureau.	
Vlisco Netherlands BV (2014). Chemical safety report Part A: Use of trichloroethylene as a solvent for the removal and recovery of resin from dyed cloth. Ispra, Italy, European Commission Joint Research Centre, Institute for Health and Consumer Protection, European Chemicals Bureau.	Vlisco Netherlands BV (2014)
EC (2014). Exposure assessment: Trichloroethylene. Ispra, Italy, European Commission Joint Research Centre, Institute for Health and Consumer Protection, European Chemicals Bureau.	(EC, 2014b)
Parker Hannifin Manufacturing (2014). Chemical safety report: Use of trichloroethylene as a process solvent for the manufacturing of hollow fibre gas separation membranes out of polyphenylene oxide (PPO). Ispra, Italy, European Commission Joint Research Centre, Institute for Health and Consumer Protection, European Chemicals Bureau.	Parker Hannifin Manufacturing (2014)
RAG Aktiengesellschaft (2014). Chemical safety report: Trichloroethylene. Ispra, Italy, European Commission Joint Research Centre, Institute for Health and Consumer Protection, European Chemicals Bureau.	RAG Aktiengesellschaft (2014)
EC (2014). Exposure assessment: Trichloroethylene, Part 3. Ispra, Italy, European Commission Joint Research Centre, Institute for Health and Consumer Protection, European Chemicals Bureau.	(EC, 2014d)
European Chlorinated Solvents Association (ECSA) (2016). Guidance on storage and handling of chlorinated solvents.	European Chlorinated Solvents Association (ECSA) (2016)
HSIA (2013). TSCA work plan chemicals program.	(HSIA, 2013)
HSIA (2008). Chlorinated solvents - The key to surface cleaning performance.	(HSIA, 2008)
NIH (2016). Report on carcinogens: Trichloroethylene. Washington, DC, National Toxicology Program.	(NIH, 2016)

ED_004056A_00072837-00124

Bibliography	url
ATSDR (2014). Draft toxicological profile for trichloroethylene. Atlanta, GA.	(ATSDR, 2014a)
Chemistry Industry Association of Canada (2017). All substances emissions for 2011 and projections for 2014. Ottawa, Canada.	Chemistry Industry Association of Canada (2017)
CalEPA (2005). Appendix D.3 Chronic RELS and toxicity summaries using the previous version of Hot Spots Risk Assessment guidelines (OEHHA 1999). Sacramento, CA, Office of Environmental Health Hazard Assessment.	(CalEPA, 2005)
MDE (2013). Facts about: Gateway South. Baltimore, MD.	(MDE, 2013)
Japanese Ministry of Environment (2004). Manual for PRTR release estimation models: Part II materials. Tokyo, Japan, Ministry of Economy, Trade, and Industry: 246-291.	(Japanese Ministry of Environment, 2004b)

ED_004056A_00072837-00125

Table_Apx B-5. Potentially Relevant Data Sources for Personal Exposure Monitoring and Area Monitoring Data for TCE

Bibliography	url
Kilburn, K. H. (1999). "Neurobehavioral and respiratory findings in jet engine repair workers: a comparison of exposed and unexposed volunteers." Environmental Research **80**(3): 244-252.	(Kilburn, 1999)
U.S. EPA (2001). Sources, emission and exposure for trichloroethylene (TCE) and related chemicals. Govt Reports Announcements & Index. Washington, DC. **GRA and I:** 138.	U.S. EPA (2001)
Nakatsuka, H., et al. (1992). "Absence of blue-yellow color vision loss among workers exposed to toluene or tetrachloroethylene, mostly at levels below occupational exposure limits." International Archives of Occupational and Environmental Health **64**(2): 113-117.	(Nakatsuka et al., 1992)
Nagaya, T., et al. (1989). "Urinary total protein and "beta"-2-microglobulin in workers exposed to trichloroethylene." Environmental Research **50**(1): 86-92.	(Nagaya et al., 1989)
Stewart, P. A., et al. (1991). "Retrospective cohort mortality study of workers at an aircraft maintenance facility: II. Exposures and their assessment." British Journal of Industrial Medicine **48**(8): 531-537.	(Stewart et al., 1991)
Ruijten, M. W., et al. (1991). "Nerve function in workers with long term exposure to trichloroethene." British Journal of Industrial Medicine **48**(2): 87-92.	Ruijten et al. (1991)
Ulander, A., et al. (1992). "Assessment of intermittent trichloroethylene exposure in vapor degreasing." AIHA Journal **53**(11): 742-743.	(Ulander et al., 1992)
Skender, L. J., et al. (1991). "A comparative study of human levels of trichloroethylene and tetrachloroethylene after occupational exposure." Archives of Environmental Health **46**(3): 174-178.	(Skender et al., 1991)
Ikeda, M. (1977). "Metabolism of trichloroethylene and tetrachloroethylene in human subjects." Environmental Health Perspectives **21**(21): 239-245.	Ikeda (1977)
Ikeda, M., et al. (1972). "Urinary excretion of total trichloro-compounds, trichloroethanol, and trichloroacetic acid as a measure of	(Ikeda et al., 1972)

ED_004056A_00072837-00126

Bibliography	url
exposure to trichloroethylene and tetrachloroethylene." British Journal of Industrial Medicine **29**(3): 328-333.	
Inoue, O., et al. (1989). "Relationship between vapor exposure and urinary metabolite excretion among workers exposed to trichloroethylene." American Journal of Industrial Medicine **15**(1): 103-110.	(Inoue et al., 1989)
Seiji, K., et al. (1990). "Sister chromatid exchanges in peripheral lymphocytes of workers exposed to benzene, trichloroethylene, or tetrachloroethylene, with reference to smoking habits." International Archives of Occupational and Environmental Health **62**(2): 171-176.	(Seiji et al., 1990)
Jiun-Horng, T., et al. (2008). "Volatile organic compound constituents from an integrated iron and steel facility." Journal of Hazardous Materials **157**(2-3): 569-578.	(Jiun-Horng et al., 2008)
Neghab, M., et al. (1997). "Raised concentration of serum bile acids following occupational exposure to halogenated solvents, 1,1,2-trichloro-1,2,2-trifluoroethane and trichloroethylene." International Archives of Occupational and Environmental Health **70**(3): 187-194.	(Neghab et al., 1997)
Chia, S. E., et al. (1997). "Endocrine profiles of male workers with exposure to trichloroethylene." American Journal of Industrial Medicine **32**(3): 217-222.	(Chia et al., 1997)
Goh, V. H., et al. (1998). "Effects of chronic exposure to low doses of trichloroethylene on steroid hormone and insulin levels in normal men." Environmental Health Perspectives **106**(1): 41-44.	(Goh et al., 1998)
Hansen, J., et al. (2001). "Cancer incidence among Danish workers exposed to trichloroethylene." Journal of Occupational and Environmental Medicine **43**(2): 133-139.	(Hansen et al., 2001)
Imbriani, M., et al. (2001). "Trichloroethylene in urine as biological exposure index." Industrial Health **39**(3): 225-230.	(Imbriani et al., 2001)
Kominsky, J. R. (1976). Health Hazard Evaluation Determination, Report number 76-24-350, Dana Corporation, Tipton, Indiana.	(Kominsky, 1976a)

ED_004056A_00072837-00127

Bibliography	url
Cincinnati, OH, National Institute for Occupational Safety and Health.	
Iavicoli, I., et al. (2005). "Effects of occupational trichloroethylene exposure on cytokine levels in workers." Journal of Occupational and Environmental Medicine **47**(5): 453-457.	Iavicoli et al. (2005)
Barret, L., et al. (1984). "Trichloroethylene occupational exposure: Elements for better prevention." International Archives of Occupational and Environmental Health **53**(4): 283-289.	(Barret et al., 1984)
Bloemen, L., et al. (2001). "Study on the cytochrome P-450- and glutathione-dependent biotransformation of trichloroethylene in humans." International Archives of Occupational and Environmental Health **74**(2): 102-108.	(Bloemen et al., 2001)
Driscoll, T., et al. (1992). "Concentrations of individual serum or plasma bile acids in workers exposed to chlorinated aliphatic hydrocarbons." British Journal of Industrial Medicine **49**(10): 700-705.	(Driscoll et al., 1992)
Ikeda, M., et al. (1971). "Excretion kinetics of urinary metabolites in a patient addicted to trichloroethylene." British Journal of Industrial Medicine **28**(2): 203-206.	(Ikeda et al., 1971)
Raaschou-Nielsen, O., et al. (2003). "Cancer risk among workers at Danish companies using trichloroethylene: A cohort study." American Journal of Epidemiology **158**(12): 1182-1192.	(Raaschou-Nielsen et al., 2003)
Raaschou-Nielsen, O., et al. (2002). "Exposure of Danish workers to trichloroethylene, 1947-1989." Applied Occupational and Environmental Hygiene **17**(10): 693-703.	(Raaschou-Nielsen et al., 2002)
Wu, C. and J. Schaum (2000). "Exposure assessment of trichloroethylene." Environmental Health Perspectives **108**(Suppl 2): 359-363.	(Wu and Schaum, 2000)
Kamijima, M., et al. (2008). "Trichloroethylene causes generalized hypersensitivity skin disorders complicated by hepatitis." Journal of Occupational Health **50**(4): 328-338.	(Kamijima et al., 2008)

ED_004056A_00072837-00128

Bibliography	url
Hein, M. J., et al. (2010). "Statistical modeling of occupational chlorinated solvent exposures for case-control studies using a literature-based database." Annals of Occupational Hygiene **54**(4): 459-472.	(Hein et al., 2010)
Xu, X., et al. (2009). "Severe hypersensitivity dermatitis and liver dysfunction induced by occupational exposure to trichloroethylene." Industrial Health **47**(2): 107-112.	(Xu et al., 2009)
Colman lerner, J. E., et al. (2012). "Characterization and health risk assessment of VOCs in occupational environments in Buenos Aires, Argentina." Atmospheric Environment **55**: 440-447.	(Colman lerner et al., 2012)
Daniels, W. J., et al. (1988). Health Hazard Evaluation Report No. HETA-86-121-1923, Modern Plating Corporation, Freeport, Illinois, Daniels, WJ; Orris, P; Kramkowski, R; Almaguer, D. **NIOSH:** 86-121.	Daniels et al. (1988b)
Crandall, M. S. and W. N. Albrecht (1989). Health Hazard Evaluation Report No. HETA-86-380-1957, York International Corporation, Madisonville, Kentucky, Crandall, MS; Albrecht, WN. **NIOSH:** 86-380.	(Crandall and Albrecht, 1989)
Rastkari, N., et al. (2011). "Exposure Assessment to Trichloroethylene and Perchloroethylene for Workers in the Dry Cleaning Industry." Bulletin of Environmental Contamination and Toxicology **86**(4): 363-367.	(Rastkari et al., 2011)
Baumann, A., et al. (2008). Evaluation of Neurological Dysfunction among Workers Exposed to Trichloroethylene, Baumann, A; Page, E; Mueller, C; Burr, G; Hitchcock, E.	(Baumann et al., 2008a)
NIOSH (1997). Control of health and safety hazards in commercial drycleaners: chemical exposures, fire hazards, and ergonomic risk factors. Education and Information Division. Atlanta, GA.	NIOSH (1997)
Kim, J., et al. (2005). "Combined effects of noise and mixed solvents exposure on the hearing function among workers in the aviation industry." Industrial Health **43**(3): 567-573.	(Kim et al., 2005)
Jones, R. M., et al. (2015). "Exposure Reconstruction and Risk Analysis for Six Semiconductor Workers With Lymphohematopoietic	(Jones et al., 2015)

ED_004056A_00072837-00129

Bibliography	url
Cancers." Journal of Occupational and Environmental Medicine **57**(6): 649-658.	
Murphy, B. L. (2016). "Vapor degreasing with chlorinated solvents." Environmental Forensics **17**(4): 282-293.	(Murphy, 2016)
Love, J. R. and M. Kern (1981). Health hazard evaluation report no. HETA-81-065-938, METRO Bus Maintenance Shop, Washington, DC. Cincinnati, OH, National Institue for Occupational Safety and Health.	Love and Kern (1981)
NIOSH (1992). Health hazard evaluation report no. HETA-90-223-2211, Thomson Consumer Electronics, Marion, Indiana. Cincinnati, OH.	(NIOSH, 1992)
Rosensteel, R. E. and J. B. Lucas (1975). Health hazard evaluation report no. HHE 74-28-212, Westinghouse Air Brake Company, Wilmerding, Pennsyvlania. Cincinnati, OH, National Institute for Occupational Safety and Health.	Rosensteel and Lucas (1975)
Burton, N. C. and J. Monesterskey (1996). Health hazard evaluation report no. HETA 96-0135-2612, Eagle Knitting Mills, Inc., Shawano, Wisconsin. Cincinnati, OH, National Institute for Occupational Safety and Health.	Burton and Monesterskey (1996)
Ruhe, R. L. (1982). Health hazard evaluation report no. HETA 82-040-119, Synthes Ltd. (USA), Monument, Colorado. Cincinnati, OH, National Institute for Occupational Safety and Health.	Ruhe (1982)
Baumann, A., et al. (2008). Health hazard evaluation report no. HETA 2004-0372-3054, Evaluation of neurological dysfunction among workers exposed to trichloroethylene, Entek International, Lebanon, Oregon. Cincinnati, OH, National Institute for Occupational Safety and Health.	(Baumann et al., 2008b)
Ruhe, R. L., et al. (1981). Health hazard evaluation report no. HHE 80-49-808, Superior Tube Company, Collegeville, Pennsylvania. Cincinnati, OH, National Institute for Occupational Safety and Health.	(Ruhe et al., 1981)

ED_004056A_00072837-00130

Bibliography	url
Okawa, M. T. (1973). Health hazard evaluation report no. HHE 72-74-51, Western Electric Company, Dublic, California. Cincinnati, OH, National Institute for Occupational Safety and Health.	(Okawa, 1973)
Okawa, M. T. (1975). Health hazard evaluation report no. HHE 74-96-173, Richdel Corporation, Carson City, Nevada. Cincinnati, OH, National Institute for Occupational Safety and Health.	Okawa (1975)
Bloom, T. F., et al. (1974). Health hazard evaluation report no. HHE 73-151-141, Essex Wire Corporation, Kenton, Ohio. Cincinnati, OH, National Institute for Occupational Safety and Health.	(Bloom et al., 1974)
Fannick, N. (1979). Health hazard evaluation report no. HHE 79-18-627, Standard Folding Cartons, Inc., Jackson Heights, New York. Cincinnati, OH, National Institute for Occupational Safety and Health.	Fannick (1979)
Kinnes, G. M. and R. R. Hammel (1990). Health hazard evaluation report no. HETA 88-357-2042, A. W Cash Valve Manufacturing Corp., Decatur, Illinois. Cincinnati, OH, National Institute for Occupational Safety and Health.	Kinnes and Hammel (1990)
Kominsky, J. R. (1976). Health hazard evaluation report no. HHE 76-24-350, Dana Corporation, Tipon, Indiana. Cincinnati, OH, National Institute for Occupational Safety and Health.	(Kominsky, 1976b)
Johnson, P. (1980). Health hazard evaluation report no. HHE 80-48-689, Miami Carey Inc., Monroe, Ohio. Cincinnati, OH, National Institute for Occupational Safety and Health.	Johnson (1980)
Gilles, D., et al. (1977). Health hazard evaluation report no. HHE 77-12-418, Airtex Products, Fairfield, Illinois. Cincinnati, OH, National Institute for Occupational Safety and Health.	Gilles et al. (1977)
Chrostek, W. J., : Levine, M. S. (1981). Health hazard evaluation report no. HHE 30-153-881, Palmer Industrial Coatings Incorp., Williamsport, Pennsylvania. Cincinnati, OH, National Institute for Occupational Safety and Health.	Chrostek (1981)
Snyder, E. M. (2003). Health hazard evaluation report no. HETA 2001-0150-2917, IKI Manufacturing, Edgerton, Wisconsin.	Snyder (2003)

ED_004056A_00072837-00131

Bibliography	url
Cincinnati, OH, National Institute for Occupational Safety and Health.	
Gilles, D. and E. Philbin (1976). Health hazard evaluation report no. HHE 76-61-337, TRW Incorporated, Philadelphia, Pennsylvania. Cincinnati, OH, National Institute for Occupational Safety and Health.	Gilles and Philbin (1976)
McManus, K. P. and M. London (1984). Health hazard evaluation report no. HETA 84-014-1507, Davis & Geck, Inc., Danbury, Connecticut. Cincinnati, OH, National Institute for Occupational Safety and Health.	McManus and London (1984)
Crandall, M. S., et al. (1988). Health hazard evaluation report no. HETA 87-095-1927, G & L Recovery Systems, Incorporated, Ashtabula, Ohio. Cincinnati, OH, National Institute for Occupational Safety and Health.	Crandall et al. (1988)
Burroughs, G. E. (1980). Health hazard evaluation report no. HHE 79-96-729, Protective Coatings Corporation, Fort Wayne, Indiana. Cincinnati, OH, National Institute for Occupational Safety and Health.	Burroughs (1980a)
Burroughs, G. E. (1980). Health hazard evaluation report no. HHE 79-96-729, Protective Coatings Corporation, Fort Wayne, Indiana, Part 2. Cincinnati, OH, National Institute for Occupational Safety and Health.	(Burroughs, 1980b)
Gunter, B. J. and J. B. Lucas (1975). Health hazard evaluation report no. HHE 74-61-232, Gates Rubber Company, Denver Colorodo. Cincinnati, OH, National Institute for Occupational Safety and Health.	Gunter and Lucas (1975)
Kinnes, G. M. (1998). Health hazard evaluation report no. HETA 97-0214-2689, Dorma Door Controls, Inc., Reamstown Pennsylvania. Cincinnati, OH, National Institute for Occupational Safety and Health.	Kinnes (1998)

ED_004056A_00072837-00132

Bibliography	url
Gunter, B. J. (1977). Health hazard evaluation report no. HHE 76-101-376, FMC Corporation, Broomfield, Colorado. Cincinnati, OH, National Institute for Occupational Safety and Health.	Gunter (1977)
Finely, M. and L. Tapp (2004). Health hazard evaluation report no. HETA 2003-0029-2923, Ward Brodt Music Mall, Madison, Wisconsin. Cincinnati, OH, National Institute for Occupational Safety and Health.	Finely and Tapp (2004)
Finely, M. and E. Page (2005). Health hazard evaluation report no. HETA 2003-0203-2952, Wallace Computer Services, Clinton, Illinois. Cincinnati, OH, National Institute for Occupational Safety and Health.	Finely and Page (2005)
Kramkowski, R. S. (1978). Health hazard evaluation report no. HHE 78-56-511, Westclox-Division of General Time Corp., Peru, Illinois. Cincinnati, OH, National Institute for Occupational Safety and Health.	Kramkowski (1978)
Straub, W. E. and C. Meyer (1977). Health hazard evaluation report no. HHE 77-3-420, Essex International, Kittaning, PA. Cincinnati, OH, National Institute for Occupational Safety and Health.	Straub and Meyer (1977)
Burton, N. C., et al. (1992). Health hazard evaluation report no. HETA 92-044-2265, General Castings CO. Liberty Road Facility , Delaware, Ohio. Cincinnati, OH, National Institute for Occupational Safety and Health.	Burton et al. (1992)
Lewis, F. A. (1980). Health hazard evaluation report no. HHE 80-87-708, Harowe Servo Contorls Inc., West Chester, Pennsylvania. Cincinnati, OH, National Institute for Occupational Safety and Health.	(Lewis, 1980)
DOW Deutschland (2017). Chemical safety report: Use of trichloroethylene as extraction solvent for bitumen in asphalt analysis. Ispra, Italy, European Commission Joint Research Centre, Institute for Health and Consumer Protection, European Chemicals Bureau.	(DOW Deutschland, 2017)
Geiss, Richard , (2014). Chemical safety report: Use of trichloroethylene in formulation. Ispra, Italy, European Commission	Geiss (2014a)

ED_004056A_00072837-00133

Bibliography	url
Joint Research Centre, Institute for Health and Consumer Protection, European Chemicals Bureau.	
Geiss, Richard , (2014). Chemical safety report: Use of trichloroethylene in packaging. Ispra, Italy, European Commission Joint Research Centre, Institute for Health and Consumer Protection, European Chemicals Bureau.	Geiss (2014b)
EC (2014). Exposure scenario: Use: Trichloroethylene as an extraction solvent for removal of process oil and formation of the porous structure in polyethylene based separators used in lead-acid batteries. Ispra, Italy, European Commission Joint Research Centre, Institute for Health and Consumer Protection, European Chemicals Bureau.	EC (2014e)
EC (2014). Chemical safety report: Trichloroethylene. Ispra, Italy, European Commission Joint Research Centre, Institute for Health and Consumer Protection, European Chemicals Bureau.	EC (2014a)
Feistritz Microporous gmbh (2014). Chemical safety report: Trichloroethylene used as degreasing solvent in the manufacture of polyethylene separators for lead-acid batteries. Ispra, Italy, European Commission Joint Research Centre, Institute for Health and Consumer Protection, European Chemicals Bureau.	Feistritz Microporous gmbh (2014)
DOMO Caproleuna GmbH (2015). Chemical safety report: Industrial use as an extractive solvent for the purification of caprolactam from caprolactam oil. Ispra, Italy, European Commission Joint Research Centre, Institute for Health and Consumer Protection, European Chemicals Bureau.	DOMO Caproleuna GmbH (2015)
DOW Deutschland (2014). Chemical safety report: Use of trichloroethylene in packaging. Ispra, Italy, European Commission Joint Research Centre, Institute for Health and Consumer Protection, European Chemicals Bureau.	DOW Deutschland (2014c)
Parker Hannifin Manufacturing (2014). Chemical safety report: Use of trichloroethylene as a process solvent for the manufacturing of hollow fibre gas separation membranes out of polyphenylene oxide (PPO). Ispra, Italy, European Commission Joint Research Centre,	Parker Hannifin Manufacturing (2014)

ED_004056A_00072837-00134

Bibliography	url
Institute for Health and Consumer Protection, European Chemicals Bureau.	
(2014). Exposure assessment: Trichloroethylene, Part 2. Ispra, Italy, European Commission Joint Research Centre, Institute for Health and Consumer Protection, European Chemicals Bureau.	(EC, 2014c)
RAG Aktiengesellschaft (2014). Chemical safety report: Trichloroethylene. Ispra, Italy, European Commission Joint Research Centre, Institute for Health and Consumer Protection, European Chemicals Bureau.	RAG Aktiengesellschaft (2014)
NIOSH (1992). Health hazard evaluation report no. HETA-90-223-2211, Thomson Consumer Electronics, Marion, Indiana. Cincinnati, OH.	(NIOSH, 1992)
Ruhe, R. L., et al. (1981). Health hazard evaluation report no. HHE 80-49-808, Superior Tube Company, Collegeville, Pennsylvania. Cincinnati, OH, National Institute for Occupational Safety and Health.	(Ruhe et al., 1981)
Okawa, M. T. (1973). Health hazard evaluation report no. HHE 72-74-51, Western Electric Company, Dublic, California. Cincinnati, OH, National Institute for Occupational Safety and Health.	(Okawa, 1973)
NIOSH (1982). Health hazard evaluation report no. HETA-82-136-1175, U.S. Army Research Office, Research Triangle Park, North Carolina. Cincinnati, OH.	NIOSH (1982)
NIOSH (1989). "Appendix G: 1989 Air Contaminants Update Project- Exposure Limits NOT in Effect." from https://www.cdc.gov/niosh/npg/nengapdxg.html.	NIOSH (1989)
OSHA (1999). Sampling and analytical methods: Tetrachloroethylene trichloroethylene. Washington, DC, U.S. Department of Labor, Occupational Safety and Health Administration.	OSHA (1999)
NIH (2016). Report on carcinogens: Trichloroethylene. Washington, DC, National Toxicology Program.	(NIH, 2016)

ED_004056A_00072837-00135

Bibliography	url
ATSDR (2014). Draft toxicological profile for trichloroethylene. Atlanta, GA.	(ATSDR, 2014a)
EC (2009). Recommendation from the scientific committee on occupational exposure limits for trichloroethylene. Brussels, Belgium.	(EC, 2009)
OSHA (2017). WTC OSHA non-asbestos sampling data for Southeast area. Washington, DC, Occupational Safety and Health Administration.	OSHA (2017)
CT DPH (2015). Health alert: trichloroethylene (TCE) and reproductive risk. Hartford, CT.	(CT DPH, 2015)
CalEPA (2015). Non-cancer toxicity of carcinogenic chemicals as a risk driver for toxic waste site cleanup decisions, California Environmental Protection Agency, Department of Toxic Substances.	CalEPA (2015)
CalEPA (2005). Appendix D.3 Chronic RELS and toxicity summaries using the previous version of Hot Spots Risk Assessment guidelines (OEHHA 1999). Sacramento, CA, Office of Environmental Health Hazard Assessment.	(CalEPA, 2005)
OSHA (1989). "1988 OSHA Pel Project documentation: Trichloroethyle." from https://www.cdc.gov/niosh/pel88/79-01.html.	OSHA (1989)
CDC (1978). Health hazard evaluation report no. HETA-78-38-512: Trans World Airlines Corporation. Cincinnati, OH, National Institute for Occupational Safety and Health.	CDC (1978)

ED_004056A_00072837-00136

Table_Apx B-6. Potentially Relevant Data Sources for Engineering Controls and Personal Protective Equipment Information for TCE[4]

Bibliography	url
Ruijten, M. W., et al. (1991). "Nerve function in workers with long term exposure to trichloroethene." British Journal of Industrial Medicine **48**(2): 87-92.	Ruijten et al. (1991)
Ulander, A., et al. (1992). "Assessment of intermittent trichloroethylene exposure in vapor degreasing." AIHA Journal **53**(11): 742-743.	(Ulander et al., 1992)
Franco, A., et al. (2007). "Estimating risk during showering exposure to VOCs of workers in a metal-degreasing facility." Journal of Toxicology and Environmental Health, Part A: Current Issues **70**(7): 627-637.	(Franco et al., 2007)
Kominsky, J. R. (1976). Health Hazard Evaluation Determination, Report number 76-24-350, Dana Corporation, Tipton, Indiana. Cincinnati, OH, National Institute for Occupational Safety and Health.	(Kominsky, 1976a)
Hein, M. J., et al. (2010). "Statistical modeling of occupational chlorinated solvent exposures for case-control studies using a literature-based database." Annals of Occupational Hygiene **54**(4): 459-472.	(Hein et al., 2010)
Xu, X., et al. (2009). "Severe hypersensitivity dermatitis and liver dysfunction induced by occupational exposure to trichloroethylene." Industrial Health **47**(2): 107-112.	(Xu et al., 2009)
OSHA (2003). Personal protective equipment. Publication # OSHA 3151-12R.	OSHA (2003)
Daniels, W. J., et al. (1988). Health Hazard Evaluation Report No. HETA-86-121-1923, Modern Plating Corporation, Freeport, Illinois, Daniels, WJ; Orris, P; Kramkowski, R; Almaguer, D. **NIOSH:** 86-121.	Daniels et al. (1988b)

[4] The data sources identified are based on preliminary results to date of the full-text screening step of the SR process. Further screening and quality control are on-going.

ED_004056A_00072837-00137

Bibliography	url
Rastkari, N., et al. (2011). "Exposure Assessment to Trichloroethylene and Perchloroethylene for Workers in the Dry Cleaning Industry." Bulletin of Environmental Contamination and Toxicology **86**(4): 363-367.	(Rastkari et al., 2011)
Fleming, D. A., et al. (2014). "Retrospective assessment of exposure to chemicals for a microelectronics and business machine manufacturing facility." Journal of Occupational and Environmental Hygiene **11**(5): 292-305.	(Fleming et al., 2014)
Friesen, M. C., et al. (2015). "Historical occupational trichloroethylene air concentrations based on inspection measurements from shanghai, china." Annals of Occupational Hygiene **59**(1): 62-78.	(Friesen et al., 2015)
Baumann, A., et al. (2008). Evaluation of Neurological Dysfunction among Workers Exposed to Trichloroethylene, Baumann, A; Page, E; Mueller, C; Burr, G; Hitchcock, E.	(Baumann et al., 2008a)
NIOSH (1997). Control of health and safety hazards in commercial drycleaners: chemical exposures, fire hazards, and ergonomic risk factors. Education and Information Division. Atlanta, GA.	NIOSH (1997)
U.S. EPA (2014). Degreasing with TCE in commercial facilities: Protecting workers. Washington, DC, U.S. Environmental Protection Agency, Office of Pollution Prevention and Toxics.	U.S. EPA (2014a)
OECD (2009). Emission scenario document on adhesive formulation. Paris, France.	OECD (2009a)
U.S. EPA (1995). Guidance document for the halogenated solvent cleaner NESHAP. Research Triangle Park, NC, Office of Air Quality Planning and Standards, Information Transfer and Program Integration Division, Control Technology Center, Federal Small Business Assistance Program.	U.S. EPA (1995)
OECD (2015). Emission scenario document on use of adhesives. Paris, France.	(OECD, 2015)

ED_004056A_00072837-00138

Bibliography	url
Reh, B. D. (1995). Health hazard evaluation report no. HETA-94-0298, Gen Corp Automotive, Wabash, Indiana. Cincinnati, OH, National Institute for Occupational Safety and Health.	Reh (1995)
Reh, B. D. (1995). Health hazard evaluation report no. HETA-94-0298, Gen Corp Automotive, Wabash, Indiana. Cincinnati, OH, National Institute for Occupational Safety and Health.	(NIOSH, 1992)
Rosensteel, R. E. and J. B. Lucas (1975). Health hazard evaluation report no. HHE 74-28-212, Westinghouse Air Brake Company, Wilmerding, Pennsyvlania. Cincinnati, OH, National Institute for Occupational Safety and Health.	Rosensteel and Lucas (1975)
Burton, N. C. and J. Monesterskey (1996). Health hazard evaluation report no. HETA 96-0135-2612, Eagle Knitting Mills, Inc., Shawano, Wisconsin. Cincinnati, OH, National Institute for Occupational Safety and Health.	Burton and Monesterskey (1996)
Ruhe, R. L. (1982). Health hazard evaluation report no. HETA 82-040-119, Synthes Ltd. (USA), Monument, Colorado. Cincinnati, OH, National Institute for Occupational Safety and Health.	Ruhe (1982)
Baumann, A., et al. (2008). Health hazard evaluation report no. HETA 2004-0372-3054, Evaluation of neurological dysfunction among workers exposed to trichloroethylene, Entek International, Lebanon, Oregon. Cincinnati, OH, National Institute for Occupational Safety and Health.	(Baumann et al., 2008b)
Ruhe, R. L., et al. (1981). Health hazard evaluation report no. HHE 80-49-808, Superior Tube Company, Collegeville, Pennsylvania. Cincinnati, OH, National Institute for Occupational Safety and Health.	(Ruhe et al., 1981)
Okawa, M. T. (1973). Health hazard evaluation report no. HHE 72-74-51, Western Electric Company, Dublic, California. Cincinnati, OH, National Institute for Occupational Safety and Health.	(Okawa, 1973)
Okawa, M. T. (1975). Health hazard evaluation report no. HHE 74-96-173, Richdel Corporation, Carson City, Nevada. Cincinnati, OH, National Institute for Occupational Safety and Health.	Okawa (1975)

ED_004056A_00072837-00139

Bibliography	url
Kominsky, J. R. (1976). Health hazard evaluation report no. HHE 76-24-350, Dana Corporation, Tipon, Indiana. Cincinnati, OH, National Institute for Occupational Safety and Health.	(Kominsky, 1976b)
Johnson, P. (1980). Health hazard evaluation report no. HHE 80-48-689, Miami Carey Inc., Monroe, Ohio. Cincinnati, OH, National Institute for Occupational Safety and Health.	Johnson (1980)
Gilles, D., et al. (1977). Health hazard evaluation report no. HHE 77-12-418, Airtex Products, Fairfield, Illinois. Cincinnati, OH, National Institute for Occupational Safety and Health.	Gilles et al. (1977)
Daniels, W., et al. (1988). Health hazard evaluation report no. HETA 86-121-1923, Modern plating Corporation, Freeport, Illinois. Cincinnati, OH, National Institute for Occupational Safety and Health.	Daniels et al. (1988a)
Chrostek, W. J., : Levine, M. S. (1981). Health hazard evaluation report no. HHE 30-153-881, Palmer Industrial Coatings Incorp., Williamsport, Pennsylvania. Cincinnati, OH, National Institute for Occupational Safety and Health.	Chrostek (1981)
Snyder, E. M. (2003). Health hazard evaluation report no. HETA 2001-0150-2917, IKI Manufacturing, Edgerton, Wisconsin. Cincinnati, OH, National Institute for Occupational Safety and Health.	Snyder (2003)
Gilles, D. and E. Philbin (1976). Health hazard evaluation report no. HHE 76-61-337, TRW Incorporated, Philadelphia, Pennsylvania. Cincinnati, OH, National Institute for Occupational Safety and Health.	Gilles and Philbin (1976)
Burroughs, G. E. (1980). Health hazard evaluation report no. HHE 79-96-729, Protective Coatings Corporation, Fort Wayne, Indiana. Cincinnati, OH, National Institute for Occupational Safety and Health.	Burroughs (1980a)
Kinnes, G. M. (1998). Health hazard evaluation report no. HETA 97-0214-2689, Dorma Door Controls, Inc., Reamstown Pennsylvania.	Kinnes (1998)

ED_004056A_00072837-00140

Bibliography	url
Cincinnati, OH, National Institute for Occupational Safety and Health.	
Finely, M. and L. Tapp (2004). Health hazard evaluation report no. HETA 2003-0029-2923, Ward Brodt Music Mall, Madison, Wisconsin. Cincinnati, OH, National Institute for Occupational Safety and Health.	Finely and Tapp (2004)
Finely, M. and E. Page (2005). Health hazard evaluation report no. HETA 2003-0203-2952, Wallace Computer Services, Clinton, Illinois. Cincinnati, OH, National Institute for Occupational Safety and Health.	Finely and Page (2005)
DOW Deutschland (2017). Chemical safety report: Use of trichloroethylene as extraction solvent for bitumen in asphalt analysis. Ispra, Italy, European Commission Joint Research Centre, Institute for Health and Consumer Protection, European Chemicals Bureau.	(DOW Deutschland, 2017)
Geiss, Richard , (2014). Chemical safety report: Use of trichloroethylene in formulation. Ispra, Italy, European Commission Joint Research Centre, Institute for Health and Consumer Protection, European Chemicals Bureau.	Geiss (2014a)
Geiss, Richard , (2014). Chemical safety report: Use of trichloroethylene in packaging. Ispra, Italy, European Commission Joint Research Centre, Institute for Health and Consumer Protection, European Chemicals Bureau.	Geiss (2014b)
EC (2014). Exposure scenario: Use: Trichloroethylene as an extraction solvent for removal of process oil and formation of the porous structure in polyethylene based separators used in lead-acid batteries. Ispra, Italy, European Commission Joint Research Centre, Institute for Health and Consumer Protection, European Chemicals Bureau.	EC (2014e)
EC (2014). Chemical safety report: Trichloroethylene. Ispra, Italy: European Commission Joint Research Centre, Institute for Health and Consumer Protection, European Chemicals Bureau.	EC (2014a)
Feistritz Microporous gmbh (2014). Chemical safety report: Trichloroethylene used as degreasing solvent in the manufacture of	Feistritz Microporous gmbh (2014)

ED_004056A_00072837-00141

Bibliography	url
polyethylene separators for lead-acid batteries. Ispra, Italy, European Commission Joint Research Centre, Institute for Health and Consumer Protection, European Chemicals Bureau.	
DOW Deutschland (2014). Chemical safety report: Industrial use as process chemical (enclosed systems) in Alcantara material production. Ispra, Italy, European Commission Joint Research Centre, Institute for Health and Consumer Protection, European Chemicals Bureau.	DOW Deutschland (2014a)
DOMO Caproleuna GmbH (2015). Chemical safety report: Industrial use as an extractive solvent for the purification of caprolactam from caprolactam oil. Ispra, Italy, European Commission Joint Research Centre, Institute for Health and Consumer Protection, European Chemicals Bureau.	DOMO Caproleuna GmbH (2015)
DOW Deutschland (2014). Chemical safety report: Use of trichloroethylene in packaging. Ispra, Italy, European Commission Joint Research Centre, Institute for Health and Consumer Protection, European Chemicals Bureau.	DOW Deutschland (2014c)
DOW Deutschland (2014). Chemical safety report: Use of trichloroethylene in industrial parts cleaning by vapour degreasing in closed systems where specific requirements (system of use-parameters) exist. Ispra, Italy, European Commission Joint Research Centre, Institute for Health and Consumer Protection, European Chemicals Bureau.	DOW Deutschland (2014b)
Vlisco Netherlands BV (2014). Chemical safety report Part A: Use of trichloroethylene as a solvent for the removal and recovery of resin from dyed cloth. Ispra, Italy, European Commission Joint Research Centre, Institute for Health and Consumer Protection, European Chemicals Bureau.	Vlisco Netherlands BV (2014)
EC (2014). Exposure assessment: Trichloroethylene. Ispra, Italy, European Commission Joint Research Centre, Institute for Health and Consumer Protection, European Chemicals Bureau.	EC (2014b)
Parker Hannifin Manufacturing (2014). Chemical safety report: Use of trichloroethylene as a process solvent for the manufacturing of	Parker Hannifin Manufacturing (2014)

ED_004056A_00072837-00142

Bibliography	url
hollow fibre gas separation membranes out of polyphenylene oxide (PPO). Ispra, Italy, European Commission Joint Research Centre, Institute for Health and Consumer Protection, European Chemicals Bureau.	
RAG Aktiengesellschaft (2014). Chemical safety report: Trichloroethylene. Ispra, Italy, European Commission Joint Research Centre, Institute for Health and Consumer Protection, European Chemicals Bureau.	RAG Aktiengesellschaft (2014)
EC (2014). Exposure assessment: Trichloroethylene, Part 3. Ispra, Italy, European Commission Joint Research Centre, Institute for Health and Consumer Protection, European Chemicals Bureau.	EC (2014d)
NIOSH (1992). Health hazard evaluation report no. HETA-90-223-2211, Thomson Consumer Electronics, Marion, Indiana. Cincinnati, OH.	(NIOSH, 1992)
Ruhe, R. L., et al. (1981). Health hazard evaluation report no. HHE 80-49-808, Superior Tube Company, Collegeville, Pennsylvania. Cincinnati, OH, National Institute for Occupational Safety and Health.	(Ruhe et al., 1981)
Okawa, M. T. (1973). Health hazard evaluation report no. HHE 72-74-51, Western Electric Company, Dublic, California. Cincinnati, OH, National Institute for Occupational Safety and Health.	(Okawa, 1973)
NIOSH (1982). Health hazard evaluation report no. HETA-82-136-1175, U.S. Army Research Office, Research Triangle Park, North Carolina. Cincinnati, OH.	NIOSH (1982)
NIOSH (1973). Criteria for a recommended standard: occupational exposure to trichloroethylene.	(NIOSH, 1973)
European Chlorinated Solvents Association (ECSA) (2016). Guidance on storage and handling of chlorinated solvents.	European Chlorinated Solvents Association (ECSA) (2016)
HSIA (2008). Chlorinated solvents - The key to surface cleaning performance.	(HSIA, 2008)

ED_004056A_00072837-00143

Bibliography	url
ECSA (2015). Product safety summary on trichloroethylene. Brussels, Belgium.	(ECSA, 2015)
CT DPH (2015). Health alert: trichloroethylene (TCE) and reproductive risk. Hartford, CT.	(CT DPH, 2015)
CalEPA (2005). Appendix D.3 Chronic RELS and toxicity summaries using the previous version of Hot Spots Risk Assessment guidelines (OEHHA 1999). Sacramento, CA, Office of Environmental Health Hazard Assessment.	(CalEPA, 2005)
CDC (1978). Health hazard evaluation report no. HETA-78-38-512: Trans World Airlines Corporation. Cincinnati, OH, National Institute for Occupational Safety and Health.	CDC (1978)
U.S. EPA (2016). Instructions for reporting 2016 TSCA chemical data reporting. Washington, DC: Office of Pollution Prevention and Toxics. https://www.epa.gov/chemical-data-reporting/instructions-reporting-2016-tsca-chemical-data-reporting.	U.S. EPA (2016a)

ED_004056A_00072837-00144

Appendix C SUPPORTING TABLES FOR INDUSTRIAL AND COMMERCIAL ACTIVITIES CONCEPTUAL MODEL

Table_Apx C-1. Supporting Table for Industrial and Commercial Activities Conceptual Model
(Note that rows shaded in gray are not proposed for further analysis)

Life Cycle Stage	Category	Subcategory	Release / Exposure Scenario	Exposure Pathway	Exposure Route	Receptor / Population	Proposed for Further Risk Evaluation	Rationale for Further Evaluation / No Further Evaluation
Manufacture	Domestic Manufacture	Domestic Manufacture	Manufacture of TCE via chlorination, oxychlorination, and as a byproduct	Liquid Contact	Dermal	Workers	Yes	Although the potential for dermal exposure exists, EPA expects the relative contribution of dermal to overall exposure to be relatively small (0.8% absorption and 99.2% volatilization based on modeling from IHSKinPerm) for non-occluded conditions. An occluded scenario, wherein liquid TCE is not able to readily evaporate, may result in higher dermal exposures and a larger contribution to the overall exposure or effects on the skin (e.g. dermal sensitization).
				Vapor	Inhalation	Workers	Yes	Due to high volatility (VP = 73.46 mmHg) at room temperature, inhalation pathway should be further analyzed.
				Liquid Contact	Dermal	ONU	No	Dermal exposure is expected to be primarily to workers directly involved in working with the chemical
				Vapor	Inhalation	ONU	Yes	Due to high volatility (VP = 73.46 mmHg) at room temperature, inhalation pathway should be further analyzed.
				Mist	Dermal/ Inhalation	Workers, ONU	No	Mist generation not expected during Manufacturing

ED_004056A_00072837-00145

Life Cycle Stage	Category	Subcategory	Release / Exposure Scenario	Exposure Pathway	Exposure Route	Receptor / Population	Proposed for Further Risk Evaluation	Rationale for Further Evaluation / No Further Evaluation
Manufacture	Import	Import	Repackaging of import containers	Liquid Contact	Dermal	Workers	Yes	Although the potential for dermal exposure exists, EPA expects the relative contribution of dermal to overall exposure to be relatively small (0.8% absorption and 99.2% volatilization based on modeling from IHSKinPerm) for non-occluded conditions. An occluded scenario, wherein liquid TCE is not able to readily evaporate, may result in higher dermal exposures and a larger contribution to the overall exposure or effects on the skin (e.g. dermal sensitization). Exposure will only occur in the event the imported material is repackaged.
				Vapor	Inhalation	Workers	Yes	Exposure expected only in the event the imported material is repackaged into different sized containers. Exposure frequency may be low.
				Liquid Contact	Dermal	ONU	No	Dermal exposure is expected to be primarily to workers directly involved in working with the chemical
				Vapor	Inhalation	ONU	Yes	Exposure expected only in the event the imported material is repackaged into different sized containers. Exposure frequency may be low.
				Mist	Dermal/ Inhalation	Workers, ONU	No	Mist generation not expected during import

ED_004056A_00072837-00146

Life Cycle Stage	Category	Subcategory	Release / Exposure Scenario	Exposure Pathway	Exposure Route	Receptor / Population	Proposed for Further Risk Evaluation	Rationale for Further Evaluation / No Further Evaluation
Processing	Processing as a reactant	Intermediate in industrial gas manufacturing; all other basic inorganic chemical manufacturing; and all other basic organic chemical manufacturing	Manufacture of HFCs, HCl and muriatic acid	Liquid Contact	Dermal	Workers	Yes	Although the potential for dermal exposure exists, EPA expects the relative contribution of dermal to overall exposure to be relatively small (0.8% absorption and 99.2% volatilization based on modeling from IHSKinPerm) for non-occluded conditions. An occluded scenario, wherein liquid TCE is not able to readily evaporate, may result in higher dermal exposures and a larger contribution to the overall exposure or effects on the skin (e.g. dermal sensitization).
				Vapor	Inhalation	Workers	Yes	Due to high volatility (VP = 73.46 mmHg) at room temperature, inhalation pathway should be further analyzed. However, potential for exposure may be low in scenarios where TCE is consumed as a chemical intermediate.
				Liquid Contact	Dermal	ONU	No	Dermal exposure is expected to be primarily to workers directly involved in working with the chemical
				Vapor	Inhalation	ONU	Yes	Due to high volatility (VP = 73.46 mmHg) at room temperature, inhalation pathway should be further analyzed. However, potential for exposure may be low in scenarios where TCE is consumed as a chemical intermediate.
				Mist	Dermal/ Inhalation	Workers, ONU	No	Mist generation not expected during processing as an intermediate

ED_004056A_00072837-00147

Life Cycle Stage	Category	Subcategory	Release / Exposure Scenario	Exposure Pathway	Exposure Route	Receptor / Population	Proposed for Further Risk Evaluation	Rationale for Further Evaluation / No Further Evaluation
Processing	Incorporated into formulation, mixture or reaction product	Solvent for cleaning or degreasing; adhesive and sealant chemicals; and solvents which become part of product formulation or mixture (e.g., lubricants and greases, paints and coatings, other uses)	Formulation of aerosol and non-aerosol products	Liquid Contact	Dermal	Workers	Yes	Although the potential for dermal exposure exists, EPA expects the relative contribution of dermal to overall exposure to be relatively small (0.8% absorption and 99.2% volatilization based on modeling from IHSKinPerm) for non-occluded conditions. An occluded scenario, wherein liquid TCE is not able to readily evaporate, may result in higher dermal exposures and a larger contribution to the overall exposure or effects on the skin (e.g. dermal sensitization).
				Vapor	Inhalation	Workers	Yes	Inhalation exposure is expected at processing sites that formulate products containing TCE. Due to high volatility (VP = 73.46 mmHg) at room temperature, inhalation pathway should be further analyzed.
				Liquid Contact	Dermal	ONU	No	Dermal exposure is expected to be primarily to workers directly involved in working with the chemical
				Vapor	Inhalation	ONU	Yes	Inhalation exposure is expected at processing sites that formulate products containing TCE. Due to high volatility (VP = 73.46 mmHg) at room temperature, inhalation pathway should be further analyzed.
				Mist	Dermal/ Inhalation	Workers, ONU	No	Mist generation not expected during processing/formulation operations.

ED_004056A_00072837-00148

Life Cycle Stage	Category	Subcategory	Release / Exposure Scenario	Exposure Pathway	Exposure Route	Receptor / Population	Proposed for Further Risk Evaluation	Rationale for Further Evaluation / No Further Evaluation
Processing	Incorporated into articles	Solvents (becomes an integral components of articles)	Manufacture of large, rigid plastic products; industrial textile dyeing; and industrial textile finishing	Liquid Contact	Dermal	Workers	Yes	Although the potential for dermal exposure exists, EPA expects the relative contribution of dermal to overall exposure to be relatively small (0.8% absorption and 99.2% volatilization based on modeling from IHSKinPerm) for non-occluded conditions. An occluded scenario, wherein liquid TCE is not able to readily evaporate, may result in higher dermal exposures and a larger contribution to the overall exposure or effects on the skin (e.g. dermal sensitization).
				Vapor	Inhalation	Workers	Yes	Inhalation exposure is expected at processing sites that incorporate TCE into articles. Due to high volatility (VP = 73.46 mmHg) at room temperature, inhalation pathway should be further analyzed.
				Liquid Contact	Dermal	ONU	No	Dermal exposure is expected to be primarily to workers directly involved in working with the chemical
				Vapor	Inhalation	ONU	Yes	Inhalation exposure is expected at processing sites that incorporate TCE into articles. Due to high volatility (VP = 73.46 mmHg) at room temperature, inhalation pathway should be further analyzed.
				Mist	Dermal/ Inhalation	Workers, ONU	No	Mist generation not expected during processing operations.

ED_004056A_00072837-00149

Life Cycle Stage	Category	Subcategory	Release / Exposure Scenario	Exposure Pathway	Exposure Route	Receptor / Population	Proposed for Further Risk Evaluation	Rationale for Further Evaluation / No Further Evaluation
Processing	Repackaging	Solvent for cleaning or degreasing	Repackaging into large and small containers	Liquid Contact	Dermal	Workers	Yes	Although the potential for dermal exposure exists, EPA expects the relative contribution of dermal to overall exposure to be relatively small (0.8% absorption and 99.2% volatilization based on modeling from IHSKinPerm) for non-occluded conditions. An occluded scenario, wherein liquid TCE is not able to readily evaporate, may result in higher dermal exposures and a larger contribution to the overall exposure or effects on the skin (e.g. dermal sensitization).
				Vapor	Inhalation	Workers	Yes	Exposure frequency may be low; however, the number of workers exposed may be high per CDR (1 submission reporting 10-25 workers, 2 submissions reporting 50-100 workers, 4 submissions reporting 100-500 workers, 2 submissions reporting 500-1,000 workers, and 2 submissions reporting NKRA).
				Liquid Contact	Dermal	ONU	No	Dermal exposure is expected to be primarily to workers directly involved in working with the chemical
				Vapor	Inhalation	ONU	Yes	Exposure frequency may be low; however, the number of workers exposed may be high per CDR (1 submission reporting 10-25 workers, 2 submissions reporting 50-100 workers, 4 submissions reporting 100-500 workers, 2 submissions reporting 500-1,000 workers, and 2 submissions reporting NKRA).
				Mist	Dermal/ Inhalation	Workers, ONU	No	Mist generation not expected during repackaging.

ED_004056A_00072837-00150

Life Cycle Stage	Category	Subcategory	Release / Exposure Scenario	Exposure Pathway	Exposure Route	Receptor / Population	Proposed for Further Risk Evaluation	Rationale for Further Evaluation / No Further Evaluation
Processing	Recycling	Recycling	Recycling of process solvents containing TCE	Liquid Contact	Dermal	Workers	Yes	Although the potential for dermal exposure exists, EPA expects the relative contribution of dermal to overall exposure to be relatively small (0.8% absorption and 99.2% volatilization based on modeling from IHSKinPerm) for non-occluded conditions. An occluded scenario, wherein liquid TCE is not able to readily evaporate, may result in higher dermal exposures and a larger contribution to the overall exposure or effects on the skin (e.g. dermal sensitization).
				Vapor	Inhalation	Workers	Yes	Inhalation exposure is expected at recycling sites. Due to high volatility (VP = 73.46 mmHg) at room temperature, inhalation pathway should be further analyzed.
				Liquid Contact	Dermal	ONU	No	Dermal exposure is expected to be primarily to workers directly involved in working with the chemical
				Vapor	Inhalation	ONU	Yes	Inhalation exposure is expected at recycling sites. Due to high volatility (VP = 73.46 mmHg) at room temperature, inhalation pathway should be further analyzed.
				Mist	Dermal/ Inhalation	Workers, ONU	No	Mist generation not expected during recycling.
Distribution in commerce	Distribution	Distribution	Distribution of bulk shipment of TCE; and distribution of formulated products	Liquid Contact, Vapor	Dermal/ Inhalation	Workers, ONU	No	These exposures will be assessed during other life-cycle stages such as loading/unloading.

ED_004056A_00072837-00151

Life Cycle Stage	Category	Subcategory	Release / Exposure Scenario	Exposure Pathway	Exposure Route	Receptor / Population	Proposed for Further Risk Evaluation	Rationale for Further Evaluation / No Further Evaluation
Industrial / commercial / consumer use	Solvents (for cleaning or degreasing)	Batch vapor degreaser (e.g., open-top, closed-loop); and In-line vapor degreaser (e.g., conveyorized, web cleaner)	Open top vapor degreasing (OTVD); OTVD with enclosures; Conveyorized vapor degreasing; Cross-rod and ferris wheel vapor degreasing; Web vapor degreasing; Airtight closed-loop degreasing system; Airless vacuum-to-vacuum degreasing system; Airless vacuum drying degreasing system	Liquid Contact	Dermal	Workers	Yes	Although the potential for dermal exposure exists, EPA expects the relative contribution of dermal to overall exposure to be relatively small (0.8% absorption and 99.2% volatilization based on modeling from IHSKinPerm) for non-occluded conditions. An occluded scenario, wherein liquid TCE is not able to readily evaporate, may result in higher dermal exposures and a larger contribution to the overall exposure or effects on the skin (e.g. dermal sensitization). Additionally, repeat contact or dermal immersion may occur, especially while cleaning and maintaining degreasing equipment. Note: EPA proposed a rule to ban the use of TCE in vapor degreasing and will consider the proposed rule when evaluating this scenario.
				Vapor	Inhalation	Workers	Yes	EPA has previously assessed OTVD in the 2014 RA and conveyorized degreasing in the subsequent Section 6 rulemaking and has a proposed rule to ban the use of TCE in vapor degreasing. EPA will forward the past assessments for this risk evaluation.
				Liquid Contact	Dermal	ONU	No	Dermal exposure is expected to be primarily to workers directly involved in working with the chemical

ED_004056A_00072837-00152

Life Cycle Stage	Category	Subcategory	Release / Exposure Scenario	Exposure Pathway	Exposure Route	Receptor / Population	Proposed for Further Risk Evaluation	Rationale for Further Evaluation / No Further Evaluation
				Vapor	Inhalation	ONU	Yes	EPA has previously assessed OTVD in the 2014 RA and conveyorized degreasing in the subsequent Section 6 rulemaking and has a proposed rule to ban the use of TCE in vapor degreasing. EPA will forward the past assessments for this risk evaluation.
				Mist	Dermal/ Inhalation	Workers, ONU	No	Mist generation not expected during this use scenario.

ED_004056A_00072837-00153

Life Cycle Stage	Category	Subcategory	Release / Exposure Scenario	Exposure Pathway	Exposure Route	Receptor / Population	Proposed for Further Risk Evaluation	Rationale for Further Evaluation / No Further Evaluation
Industrial / commercial / consumer use	Solvents (for cleaning or degreasing)	Cold cleaner	Cold cleaning - maintenance (manual spray; spray sink; dip tank)	Liquid Contact	Dermal	Workers	Yes	Although the potential for dermal exposure exists, EPA expects the relative contribution of dermal to overall exposure to be relatively small (0.8% absorption and 99.2% volatilization based on modeling from IHSKinPerm) for non-occluded conditions. An occluded scenario, wherein liquid TCE is not able to readily evaporate, may result in higher dermal exposures and a larger contribution to the overall exposure or effects on the skin (e.g. dermal sensitization). Additionally, repeat contact or dermal immersion may occur.
				Vapor	Inhalation	Workers	Yes	Inhalation exposure is expected from cold cleaning operations. Due to high volatility (VP = 73.46 mmHg) at room temperature, inhalation pathway should be further analyzed.
				Liquid Contact	Dermal	ONU	No	Dermal exposure is expected to be primarily to workers directly involved in working with the chemical
				Vapor	Inhalation	ONU	Yes	Inhalation exposure is expected from cold cleaning operations. Due to high volatility (VP = 73.46 mmHg) at room temperature, inhalation pathway should be further analyzed.
				Mist	Dermal/ Inhalation	Workers, ONU	Yes	EPA will further evaluate to determine if mist generation is applicable.

ED_004056A_00072837-00154

Life Cycle Stage	Category	Subcategory	Release / Exposure Scenario	Exposure Pathway	Exposure Route	Receptor / Population	Proposed for Further Risk Evaluation	Rationale for Further Evaluation / No Further Evaluation
Industrial / commercial / consumer use	Solvents (for cleaning or degreasing)	Aerosol spray degreaser/ cleaner	Aerosol use in degreasing/ cleaning	Liquid Contact	Dermal	Workers	No	Contact time with skin is expected to be <3 min due to rapid volatilization. However, repeat contact may occur. Note: EPA proposed a rule to ban the use of TCE in aerosol degreasing and will consider the proposed rule when evaluating this scenario.
				Vapor	Inhalation	Workers	Yes	As a result of the 2014 RA, EPA previously assessed inhalation exposure from aerosol degreasing during the Section 6 rulemaking and has a proposed rule to ban the use of TCE in aerosol degreasing. EPA will forward the past assessments for this risk evaluation.
				Liquid Contact	Dermal	ONU	No	Dermal exposure is expected to be primarily to workers directly involved in working with the chemical
				Vapor	Inhalation	ONU	Yes	As a result of the 2014 RA, EPA previously assessed inhalation exposure from aerosol degreasing during the Section 6 rulemaking and has a proposed rule to ban the use of TCE in aerosol degreasing. EPA will forward the past assessments for this risk evaluation.
				Mist	Dermal/ Inhalation	Workers, ONU	Yes	Mist generation expected for aerosol applications.

ED_004056A_00072837-00155

Life Cycle Stage	Category	Subcategory	Release / Exposure Scenario	Exposure Pathway	Exposure Route	Receptor / Population	Proposed for Further Risk Evaluation	Rationale for Further Evaluation / No Further Evaluation
Industrial / commercial / consumer use	Solvents (for cleaning or degreasing)	Mold release	Aerosol use of mold release	Liquid Contact	Dermal	Workers	Yes	Although the potential for dermal exposure exists, EPA expects the relative contribution of dermal to overall exposure to be relatively small (0.8% absorption and 99.2% volatilization based on modeling from IHSKinPerm) for non-occluded conditions. An occluded scenario, wherein liquid TCE is not able to readily evaporate, may result in higher dermal exposures and a larger contribution to the overall exposure or effects on the skin (e.g. dermal sensitization). Additionally, repeat contact may occur.
				Vapor	Inhalation	Workers	Yes	Inhalation exposure is expected from use of aerosols. Due to high volatility (VP = 73.46 mmHg) at room temperature, inhalation pathway should be further analyzed.
				Liquid Contact	Dermal	ONU	No	Dermal exposure is expected to be primarily to workers directly involved in working with the chemical
				Vapor	Inhalation	ONU	Yes	Inhalation exposure is expected from use of aerosols. Due to high volatility (VP = 73.46 mmHg) at room temperature, inhalation pathway should be further analyzed.
				Mist	Dermal/ Inhalation	Workers, ONU	Yes	Mist generation expected for aerosol applications.

ED_004056A_00072837-00156

Life Cycle Stage	Category	Subcategory	Release / Exposure Scenario	Exposure Pathway	Exposure Route	Receptor / Population	Proposed for Further Risk Evaluation	Rationale for Further Evaluation / No Further Evaluation
Industrial / commercial / consumer use	Lubricants and greases/ lubricants and lubricant additives	Tap and die fluid	Use of metalworking fluids (tap and die)	Liquid Contact	Dermal	Workers	Yes	Although the potential for dermal exposure exists, EPA expects the relative contribution of dermal to overall exposure to be relatively small (0.8% absorption and 99.2% volatilization based on modeling from IHSKinPerm) for non-occluded conditions. An occluded scenario, wherein liquid TCE is not able to readily evaporate, may result in higher dermal exposures and a larger contribution to the overall exposure or effects on the skin (e.g. dermal sensitization). Additionally, repeat contact may occur.
				Vapor	Inhalation	Workers	Yes	Inhalation exposure is expected from use of metalworking fluids. Due to high volatility (VP = 73.46 mmHg) at room temperature, inhalation pathway should be further analyzed.
				Liquid Contact	Dermal	ONU	No	Dermal exposure is expected to be primarily to workers directly involved in working with the chemical
				Vapor	Inhalation	ONU	Yes	Inhalation exposure is expected from use of metalworking fluids. Due to high volatility (VP = 73.46 mmHg) at room temperature, inhalation pathway should be further analyzed.
				Mist	Dermal/ Inhalation	Workers, ONU	Yes	Mist generation expected from use of metalworking fluids.

ED_004056A_00072837-00157

Life Cycle Stage	Category	Subcategory	Release / Exposure Scenario	Exposure Pathway	Exposure Route	Receptor / Population	Proposed for Further Risk Evaluation	Rationale for Further Evaluation / No Further Evaluation
Industrial / commercial / consumer use	Lubricants and greases/ lubricants and lubricant additives	Penetrating lubricant	Aerosol application of lubricants to substrates	Liquid Contact	Dermal	Workers	Yes	Although the potential for dermal exposure exists, EPA expects the relative contribution of dermal to overall exposure to be relatively small (0.8% absorption and 99.2% volatilization based on modeling from IHSKinPerm) for non-occluded conditions. An occluded scenario, wherein liquid TCE is not able to readily evaporate, may result in higher dermal exposures and a larger contribution to the overall exposure or effects on the skin (e.g. dermal sensitization). Additionally, repeat contact may occur.
				Vapor	Inhalation	Workers	Yes	Inhalation exposure is expected from use of aerosols. Due to high volatility (VP = 73.46 mmHg) at room temperature, inhalation pathway should be further analyzed.
				Liquid Contact	Dermal	ONU	No	Dermal exposure is expected to be primarily to workers directly involved in working with the chemical
				Vapor	Inhalation	ONU	Yes	Inhalation exposure is expected from use of aerosols. Due to high volatility (VP = 73.46 mmHg) at room temperature, inhalation pathway should be further analyzed.
				Mist	Dermal/ Inhalation	Workers, ONU	Yes	Mist generation expected for aerosol applications.

ED_004056A_00072837-00158

Life Cycle Stage	Category	Subcategory	Release / Exposure Scenario	Exposure Pathway	Exposure Route	Receptor / Population	Proposed for Further Risk Evaluation	Rationale for Further Evaluation / No Further Evaluation
Industrial / commercial / consumer use	Adhesives and sealants	Solvent-based adhesives and sealants; and mirror edge sealants	Industrial spray adhesive application; and other adhesive and sealant applications (e.g. roll)	Liquid Contact	Dermal	Workers	Yes	Although the potential for dermal exposure exists, EPA expects the relative contribution of dermal to overall exposure to be relatively small (0.8% absorption and 99.2% volatilization based on modeling from IHSKinPerm) for non-occluded conditions. An occluded scenario, wherein liquid TCE is not able to readily evaporate, may result in higher dermal exposures and a larger contribution to the overall exposure or effects on the skin (e.g. dermal sensitization). Additionally, repeat contact may occur.
				Vapor	Inhalation	Workers	Yes	Inhalation exposure is expected from use of adhesives and sealants. Due to high volatility (VP = 73.46 mmHg) at room temperature, inhalation pathway should be further analyzed.
				Liquid Contact	Dermal	ONU	No	Dermal exposure is expected to be primarily to workers directly involved in working with the chemical
				Vapor	Inhalation	ONU	Yes	Inhalation exposure is expected from use of adhesives and sealants. Due to high volatility (VP = 73.46 mmHg) at room temperature, inhalation pathway should be further analyzed.
				Mist	Dermal/ Inhalation	Workers, ONU	Yes	Mist generation expected for spray and roll applications. EPA will further evaluate to determine if mist generation is applicable for each adhesive/sealant product.

ED_004056A_00072837-00159

Life Cycle Stage	Category	Subcategory	Release / Exposure Scenario	Exposure Pathway	Exposure Route	Receptor / Population	Proposed for Further Risk Evaluation	Rationale for Further Evaluation / No Further Evaluation
Industrial / commercial / consumer use	Adhesives and sealants	Tire repair cement/sealer	Commercial automotive repair/servicing	Liquid Contact	Dermal	Workers	Yes	Although the potential for dermal exposure exists, EPA expects the relative contribution of dermal to overall exposure to be relatively small (0.8% absorption and 99.2% volatilization based on modeling from IHSKinPerm) for non-occluded conditions. An occluded scenario, wherein liquid TCE is not able to readily evaporate, may result in higher dermal exposures and a larger contribution to the overall exposure or effects on the skin (e.g. dermal sensitization). Additionally, repeat contact may occur.
				Vapor	Inhalation	Workers	Yes	Inhalation exposure is expected from use of adhesives and sealants. Due to high volatility (VP = 73.46 mmHg) at room temperature, inhalation pathway should be further analyzed.
				Liquid Contact	Dermal	ONU	No	Dermal exposure is expected to be primarily to workers directly involved in working with the chemical
				Vapor	Inhalation	ONU	Yes	Inhalation exposure is expected from use of adhesives and sealants. Due to high volatility (VP = 73.46 mmHg) at room temperature, inhalation pathway should be further analyzed.
				Mist	Dermal/ Inhalation	Workers, ONU	Yes	Products identified in marker report show brush application; generation of mists not expected from brush applications. EPA will further evaluate if other application methods resulting in mist generation are applicable to this scenario

ED_004056A_00072837-00160

Life Cycle Stage	Category	Subcategory	Release / Exposure Scenario	Exposure Pathway	Exposure Route	Receptor / Population	Proposed for Further Risk Evaluation	Rationale for Further Evaluation / No Further Evaluation
Industrial / commercial / consumer use	Functional fluids (closed systems)	Heat exchange fluid	Refrigerant in air-conditioning installations; and low temperature heat transfer agent	Liquid Contact	Dermal	Workers	Yes	Although the potential for dermal exposure exists, EPA expects the relative contribution of dermal to overall exposure to be relatively small (0.8% absorption and 99.2% volatilization based on modeling from IHSKinPerm) for non-occluded conditions. An occluded scenario, wherein liquid TCE is not able to readily evaporate, may result in higher dermal exposures and a larger contribution to the overall exposure or effects on the skin (e.g. dermal sensitization). Additionally, repeat contact may occur.
				Vapor	Inhalation	Workers	Yes	Inhalation exposure is expected from initial charging and servicing/recharging of heat exchange fluid. Due to high volatility (VP = 73.46 mmHg) at room temperature, inhalation pathway should be further analyzed. However exposure frequency may be low.
				Liquid Contact	Dermal	ONU	No	Dermal exposure is expected to be primarily to workers directly involved in working with the chemical
				Vapor	Inhalation	ONU	Yes	Inhalation exposure is expected from initial charging and servicing/recharging of heat exchange fluid. Due to high volatility (VP = 73.46 mmHg) at room temperature, inhalation pathway should be further analyzed. However exposure frequency may be low.
				Mist	Dermal/ Inhalation	Workers, ONU	No	Mist generation not expected during use of heat exchange fluid.

ED_004056A_00072837-00161

Life Cycle Stage	Category	Subcategory	Release / Exposure Scenario	Exposure Pathway	Exposure Route	Receptor / Population	Proposed for Further Risk Evaluation	Rationale for Further Evaluation / No Further Evaluation
Industrial / commercial	Paints and coatings	Diluent in solvent-based paints and coatings	Industrial spray coating application; and other paint and coating applications (e.g. roll)	Liquid Contact	Dermal	Workers	Yes	Although the potential for dermal exposure exists, EPA expects the relative contribution of dermal to overall exposure to be relatively small (0.8% absorption and 99.2% volatilization based on modeling from IHSKinPerm) for non-occluded conditions. An occluded scenario, wherein liquid TCE is not able to readily evaporate, may result in higher dermal exposures and a larger contribution to the overall exposure or effects on the skin (e.g. dermal sensitization). Additionally, repeat contact may occur.
				Vapor	Inhalation	Workers	Yes	Inhalation exposure is expected from use of paints and coatings. Due to high volatility (VP = 73.46 mmHg) at room temperature, inhalation pathway should be further analyzed.
				Liquid Contact	Dermal	ONU	No	Dermal exposure is expected to be primarily to workers directly involved in working with the chemical
				Vapor	Inhalation	ONU	Yes	Inhalation exposure is expected from use of paints and coatings. Due to high volatility (VP = 73.46 mmHg) at room temperature, inhalation pathway should be further analyzed.
				Mist	Dermal/ Inhalation	Workers, ONU	Yes	Mist generation expected for spray and roll applications. EPA will further evaluate to determine if mist generation is applicable for each paint/coating product.

ED_004056A_00072837-00162

Life Cycle Stage	Category	Subcategory	Release / Exposure Scenario	Exposure Pathway	Exposure Route	Receptor / Population	Proposed for Further Risk Evaluation	Rationale for Further Evaluation / No Further Evaluation
Industrial / commercial / consumer use	Cleaning and furniture care products	Carpet cleaner	Commercial carpet spotting and stain removers	Liquid Contact	Dermal	Workers	Yes	Although the potential for dermal exposure exists, EPA expects the relative contribution of dermal to overall exposure to be relatively small (0.8% absorption and 99.2% volatilization based on modeling from IHSKinPerm) for non-occluded conditions. An occluded scenario, wherein liquid TCE is not able to readily evaporate, may result in higher dermal exposures and a larger contribution to the overall exposure or effects on the skin (e.g. dermal sensitization). Additionally, repeat contact may occur.
				Vapor	Inhalation	Workers	Yes	Inhalation exposure is expected from carpet cleaning. Due to high volatility (VP = 73.46 mmHg) at room temperature, inhalation pathway should be further analyzed.
				Liquid Contact	Dermal	ONU	No	Dermal exposure is expected to be primarily to workers directly involved in working with the chemical
				Vapor	Inhalation	ONU	Yes	Inhalation exposure is expected from carpet cleaning. Due to high volatility (VP = 73.46 mmHg) at room temperature, inhalation pathway should be further analyzed.
				Mist	Dermal/ Inhalation	Workers, ONU	Yes	EPA will further evaluate to determine if mist generation is applicable.

ED_004056A_00072837-00163

Life Cycle Stage	Category	Subcategory	Release / Exposure Scenario	Exposure Pathway	Exposure Route	Receptor / Population	Proposed for Further Risk Evaluation	Rationale for Further Evaluation / No Further Evaluation
Industrial / commercial / consumer use	Cleaning and furniture care products	Cleaning wipes		Liquid Contact	Dermal	Workers	Yes	Although the potential for dermal exposure exists, EPA expects the relative contribution of dermal to overall exposure to be relatively small (0.8% absorption and 99.2% volatilization based on modeling from IHSKinPerm) for non-occluded conditions. An occluded scenario, wherein liquid TCE is not able to readily evaporate, may result in higher dermal exposures and a larger contribution to the overall exposure or effects on the skin (e.g. dermal sensitization). Additionally, repeat contact may occur.
				Vapor	Inhalation	Workers	Yes	Inhalation exposure is expected from wipe cleaning. Due to high volatility (VP = 73.46 mmHg) at room temperature, inhalation pathway should be further analyzed.
				Liquid Contact	Dermal	ONU	No	Dermal exposure is expected to be primarily to workers directly involved in working with the chemical
				Vapor	Inhalation	ONU	Yes	Inhalation exposure is expected from wipe cleaning. Due to high volatility (VP = 73.46 mmHg) at room temperature, inhalation pathway should be further analyzed.
				Mist	Dermal/ Inhalation	Workers, ONU	No	Mist generation not expected during wipe cleaning.

ED_004056A_00072837-00164

Life Cycle Stage	Category	Subcategory	Release / Exposure Scenario	Exposure Pathway	Exposure Route	Receptor / Population	Proposed for Further Risk Evaluation	Rationale for Further Evaluation / No Further Evaluation
Industrial / commercial / consumer use	Laundry and dishwashing products	Spot cleaner	Spot cleaning at dry cleaners	Liquid Contact	Dermal	Workers	No	Although the potential for dermal exposure exists, EPA expects the relative contribution of dermal to overall exposure to be relatively small (0.8% absorption and 99.2% volatilization based on modeling from IHSKinPerm) for non-occluded conditions. An occluded scenario, wherein liquid TCE is not able to readily evaporate, may result in higher dermal exposures and a larger contribution to the overall exposure or effects on the skin (e.g. dermal sensitization). Additionally, repeat contact may occur. Note: EPA proposed a rule to ban the use of TCE in spot cleaning and will consider the proposed rule when evaluating this scenario.
				Vapor	Inhalation	Workers	Yes	EPA has previously assessed spot cleaning in the 2014 RA and in the subsequent Section 6 rulemaking and has a proposed rule to ban the use of TCE in spot cleaners. EPA will forward the past assessments for this risk evaluation.
				Liquid Contact	Dermal	ONU	No	Dermal exposure is expected to be primarily to workers directly involved in working with the chemical
				Vapor	Inhalation	ONU	Yes	EPA has previously assessed OTVD in the 2014 RA and conveyorized degreasing in the subsequent Section 6 rulemaking and has a proposed rule to ban the use of TCE in vapor degreasing. EPA will forward the past assessments for this risk evaluation.

ED_004056A_00072837-00165

Life Cycle Stage	Category	Subcategory	Release / Exposure Scenario	Exposure Pathway	Exposure Route	Receptor / Population	Proposed for Further Risk Evaluation	Rationale for Further Evaluation / No Further Evaluation
				Mist	Dermal/ Inhalation	Workers, ONU	Yes	Mist generation expected for spot cleaning. Note: EPA proposed a rule to ban the use of TCE in spot cleaning and will consider the proposed rule when evaluating this scenario.
Industrial / commercial / consumer use	Corrosion inhibitors and anti-scaling agents	Battery coat; and soap, cleaning compound, and toilet preparation manufacturing	Battery coat; and soap, cleaning compound, and toilet preparation manufacturing	Liquid Contact	Dermal	Workers	Yes	Although the potential for dermal exposure exists, EPA expects the relative contribution of dermal to overall exposure to be relatively small (0.8% absorption and 99.2% volatilization based on modeling from IHSKinPerm) for non-occluded conditions. An occluded scenario, wherein liquid TCE is not able to readily evaporate, may result in higher dermal exposures and a larger contribution to the overall exposure or effects on the skin (e.g. dermal sensitization). Additionally, EPA will need additional information to fully understand the use of TCE in this scenario to determine potential for dermal exposure.
				Vapor	Inhalation	Workers	Yes	Due to high volatility (VP = 73.46 mmHg) at room temperature, inhalation pathway should be further analyzed. However, EPA will need additional information to fully understand the use of TCE in this scenario to determine potential for inhalation exposure.
				Liquid Contact	Dermal	ONU	No	Dermal exposure is expected to be primarily to workers directly involved in working with the chemical

ED_004056A_00072837-00166

Life Cycle Stage	Category	Subcategory	Release / Exposure Scenario	Exposure Pathway	Exposure Route	Receptor / Population	Proposed for Further Risk Evaluation	Rationale for Further Evaluation / No Further Evaluation
				Vapor	Inhalation	ONU	Yes	Due to high volatility (VP = 73.46 mmHg) at room temperature, inhalation pathway should be further analyzed. However, EPA will need additional information to fully understand the use of TCE in this scenario to determine potential for inhalation exposure.
				Mist	Dermal/ Inhalation	Workers, ONU	Yes	EPA will further evaluate to determine if mist generation is applicable.
Industrial / commercial / consumer use	Processing aids	Industrial process solvent; industrial extraction solvent; and industrial precipitant	Process solvent for lithium ion battery manufacture; polymer fiber spinning; fluoroelastomer manufacture; Alcantara manufacture; pulverized sulfur production; and sulfur chloride and cellulose esters and ethers	Liquid Contact	Dermal	Workers	Yes	Although the potential for dermal exposure exists, EPA expects the relative contribution of dermal to overall exposure to be relatively small (0.8% absorption and 99.2% volatilization based on modeling from IHSKinPerm) for non-occluded conditions. An occluded scenario, wherein liquid TCE is not able to readily evaporate, may result in higher dermal exposures and a larger contribution to the overall exposure or effects on the skin (e.g. dermal sensitization). Additionally, EPA will need additional information to fully understand the use of TCE in this scenario to determine potential for dermal exposure.
			Extraction solvent for caprolactam manufacture; recovery of fat-free glues in tanneries; wood resin extraction;	Vapor	Inhalation	Workers	Yes	Due to high volatility (VP = 73.46 mmHg) at room temperature, inhalation pathway should be further analyzed. However, EPA will need additional information to fully understand the use of TCE in this scenario to determine potential for inhalation exposure.

ED_004056A_00072837-00167

Life Cycle Stage	Category	Subcategory	Release / Exposure Scenario	Exposure Pathway	Exposure Route	Receptor / Population	Proposed for Further Risk Evaluation	Rationale for Further Evaluation / No Further Evaluation
			recovery of wax and paraffin from refuse; tin recovery from scrap metal; and phenol extraction from wastewater Precipitant for beta-cyclodextrin manufacture	Liquid Contact	Dermal	ONU	No	Dermal exposure is expected to be primarily to workers directly involved in working with the chemical
				Vapor	Inhalation	ONU	Yes	Due to high volatility (VP = 73.46 mmHg) at room temperature, inhalation pathway should be further analyzed. However, EPA will need additional information to fully understand the use of TCE in this scenario to determine potential for inhalation exposure.
				Mist	Dermal/ Inhalation	Workers, ONU	No	Mist generation not expected during use of industrial processing aid.
Industrial / commercial / consumer use	Ink, toner and colorant products	Toner aid	Commercial printing and copying	Liquid Contact	Dermal	Workers		Contact time with skin is expected to be <3 min due to rapid volatilization. Additionally, toner expected to be contained in cartridges thus reducing the potential for dermal exposures.
				Vapor	Inhalation	Workers	Yes	Inhalation exposure is expected from toner use. Due to high volatility (VP = 73.46 mmHg) at room temperature, inhalation pathway should be further analyzed.
				Liquid Contact	Dermal	ONU	No	Dermal exposure is expected to be primarily to workers directly involved in working with the chemical
				Vapor	Inhalation	ONU	Yes	Inhalation exposure is expected from toner use. Due to high volatility (VP = 73.46 mmHg) at room temperature, inhalation pathway should be further analyzed.
				Mist	Dermal/ Inhalation	Workers, ONU	Yes	EPA will further evaluate to determine if mist generation is expected.

ED_004056A_00072837-00168

Life Cycle Stage	Category	Subcategory	Release / Exposure Scenario	Exposure Pathway	Exposure Route	Receptor / Population	Proposed for Further Risk Evaluation	Rationale for Further Evaluation / No Further Evaluation
Industrial / commercial / consumer use	Automotive care products	Brake and parts cleaner	Aerosol degreasing use in commercial automotive servicing and brake servicing	Liquid Contact	Dermal	Workers	No	Contact time with skin is expected to be <3 min due to rapid volatilization. However, repeat contact may occur. Additionally, EPA may need to evaluate total exposure to TCE from multiple conditions of use in automotive servicing (degreasing and tire repair). Note: EPA proposed a rule to ban the use of TCE in aerosol degreasing and will consider the proposed rule when evaluating this scenario.
				Vapor	Inhalation	Workers	Yes	As a result of the 2014 RA, EPA previously assessed inhalation exposure from aerosol degreasing during the Section 6 rulemaking and has a proposed rule to ban the use of TCE in aerosol degreasing. EPA will forward the past assessments for this risk evaluation. Additionally, EPA may need to evaluate total exposure to TCE from multiple conditions of use in automotive servicing (degreasing and tire repair).
				Liquid Contact	Dermal	ONU	No	Dermal exposure is expected to be primarily to workers directly involved in working with the chemical

ED_004056A_00072837-00169

Life Cycle Stage	Category	Subcategory	Release / Exposure Scenario	Exposure Pathway	Exposure Route	Receptor / Population	Proposed for Further Risk Evaluation	Rationale for Further Evaluation / No Further Evaluation
				Vapor	Inhalation	ONU	Yes	As a result of the 2014 RA, EPA previously assessed inhalation exposure from aerosol degreasing during the Section 6 rulemaking and has a proposed rule to ban the use of TCE in aerosol degreasing. EPA will forward the past assessments for this risk evaluation. Additionally, EPA may need to evaluate total exposure to TCE from multiple conditions of use in automotive servicing (degreasing and tire repair).
				Mist	Dermal/ Inhalation	Workers, ONU	Yes	Mist generation expected for aerosol applications. Additionally, EPA may need to evaluate total exposure to TCE from multiple conditions of use in automotive servicing (degreasing and tire repair). Note: EPA proposed a rule to ban the use of TCE in aerosol degreasing and will consider the proposed rule when evaluating this scenario.
Industrial / commercial / consumer use	Apparel and footwear care products	Shoe polish	Commercial shoe polishing and repair	Liquid Contact	Dermal	Workers	Yes	Although the potential for dermal exposure exists, EPA expects the relative contribution of dermal to overall exposure to be relatively small (0.8% absorption and 99.2% volatilization based on modeling from IHSKinPerm) for non-occluded conditions. An occluded scenario, wherein liquid TCE is not able to readily evaporate, may result in higher dermal exposures and a larger contribution to the overall exposure or effects on the skin (e.g. dermal sensitization). Additionally, repeat contact may occur.

ED_004056A_00072837-00170

Life Cycle Stage	Category	Subcategory	Release / Exposure Scenario	Exposure Pathway	Exposure Route	Receptor / Population	Proposed for Further Risk Evaluation	Rationale for Further Evaluation / No Further Evaluation
				Vapor	Inhalation	Workers	Yes	Inhalation exposure is expected from shoe polish use. Due to high volatility (VP = 73.46 mmHg) at room temperature, inhalation pathway should be further analyzed.
				Liquid Contact	Dermal	ONU	No	Dermal exposure is expected to be primarily to workers directly involved in working with the chemical
				Vapor	Inhalation	ONU	Yes	Inhalation exposure is expected from shoe polish use. Due to high volatility (VP = 73.46 mmHg) at room temperature, inhalation pathway should be further analyzed.
				Mist	Dermal/ Inhalation	Workers, ONU	Yes	EPA will further evaluate to determine if mist generation is applicable.
Industrial / commercial / consumer use	Other uses	Other miscellaneous industrial, commercial, and consumer uses	See Table XX for specific scenario corresponding to the condition of use.	Liquid Contact	Dermal	Workers	Yes	Although the potential for dermal exposure exists, EPA expects the relative contribution of dermal to overall exposure to be relatively small (0.8% absorption and 99.2% volatilization based on modeling from IHSKinPerm) for non-occluded conditions. An occluded scenario, wherein liquid TCE is not able to readily evaporate, may result in higher dermal exposures and a larger contribution to the overall exposure or effects on the skin (e.g. dermal sensitization). Additionally, repeat contact may occur for some miscellaneous conditions of use.
				Vapor	Inhalation	Workers	Yes	Due to high volatility (VP = 73.46 mmHg) at room temperature, inhalation pathway should be further analyzed.

ED_004056A_00072837-00171

Life Cycle Stage	Category	Subcategory	Release / Exposure Scenario	Exposure Pathway	Exposure Route	Receptor / Population	Proposed for Further Risk Evaluation	Rationale for Further Evaluation / No Further Evaluation
				Liquid Contact	Dermal	ONU	No	Dermal exposure is expected to be primarily to workers directly involved in working with the chemical
				Vapor	Inhalation	ONU	Yes	Due to high volatility (VP = 73.46 mmHg) at room temperature, inhalation pathway should be further analyzed.
				Mist	Dermal/ Inhalation	Workers, ONU	Yes	EPA will further evaluate to determine if mist generation is applicable to specific conditions of use in this scenario.
Disposal	Waste Handling, Treatment and Disposal	Disposal of TCE wastes	Worker handling of wastes	Liquid Contact	Dermal	Workers	Yes	Although the potential for dermal exposure exists, EPA expects the relative contribution of dermal to overall exposure to be relatively small (0.8% absorption and 99.2% volatilization based on modeling from IHSKinPerm) for non-occluded conditions. An occluded scenario, wherein liquid TCE is not able to readily evaporate, may result in higher dermal exposures and a larger contribution to the overall exposure or effects on the skin (e.g. dermal sensitization). Additionally, the frequency of exposure and the potential for dermal immersion needs to be further analyzed.
				Vapor	Inhalation	Workers	Yes	Due to high volatility (VP = 73.46 mmHg) at room temperature, inhalation pathway should be further analyzed.
				Liquid Contact	Dermal	ONU	No	Dermal exposure is expected to be primarily to workers directly involved in working with the chemical

ED_004056A_00072837-00172

Life Cycle Stage	Category	Subcategory	Release / Exposure Scenario	Exposure Pathway	Exposure Route	Receptor / Population	Proposed for Further Risk Evaluation	Rationale for Further Evaluation / No Further Evaluation
				Vapor	Inhalation	ONU	Yes	Due to high volatility (VP = 73.46 mmHg) at room temperature, inhalation pathway should be further analyzed.

ED_004056A_00072837-00173

Appendix D SUPPORTING TABLE FOR CONSUMER ACTIVITIES AND USES CONCEPTUAL MODEL

Table_Apx D-1. Consumer Activities and Uses Conceptual Model Supporting Table

(Note that rows shaded in gray are not proposed for further analysis)

Life Cycle Stage	Category	Subcategory	Release / Exposure Scenario	Exposure Pathway	Exposure Routes	Receptor / Population	Proposed for Further Risk Evaluation	Applicable Modeling Approach	Rationale for Further Evaluation / no Further Evaluation
Use	Solvents (for cleaning or degreasing)	Liquid / non-spray application: Cold cleaner	Dermal contact with liquid product on the skin per event - shorter duration (direct)	Liquid Contact	Dermal	Consumers	Yes	CEM	TCE in direct contact with skin would be expected to evaporate before significant dermal absorption could occur. However, there may be effects on the skin (e.g., dermal sensitization), or certain scenarios with a higher dermal exposure potential, for example, an occluded scenario, wherein liquid TCE is not able to evaporate readily. Therefore, occluded scenarios will be evaluated for systemic and sensitization effects, whereas, non-occluded scenarios will be evaluated for sensitization effects alone.
			Dermal contact with liquid product on the skin per event - shorter duration (direct)			Bystanders	No	NA	Generally, individuals that have contact with liquid TCE would be users and not bystanders. Therefore, direct dermal exposures to liquid TCE are not expected and inhalation is the primary route of exposure for bystanders.
			Oral swallowing the product directly		Oral	Consumers	No	NA	Oral exposures may also occur through hand-to-mouth patterns following dermal contact with TCE. As described, any TCE present on surfaces of the home or skin surfaces is expected to volatilize rapidly – making it available for inhalation as a vapor before oral ingestion may occur through such patterns.
			Oral swallowing the product directly			Bystanders	No	NA	Generally, individuals that have contact with liquid TCE would be users and not bystanders. Therefore, direct oral exposures to liquid TCE are not expected and inhalation is the primary route of exposure for bystanders.

ED_004056A_00072837-00174

Life Cycle Stage	Category	Subcategory	Release / Exposure Scenario	Exposure Pathway	Exposure Routes	Receptor / Population	Proposed for Further Risk Evaluation	Applicable Modeling Approach	Rationale for Further Evaluation / no Further Evaluation
			Dermal vapor to skin	Vapor	Dermal	Consumers	No	NA	Mist not expected from this use pattern. In scenarios involving exposure to TCE vapor, inhalation and dermal exposures are concurrent, with predominate exposure from inhalation. A dermal to inhalation uptake ratio of around 0.1% for vapor to skin scenarios is predicted using IHSkinPerm. Therefore, only the inhalation exposures will be evaluated in these cases.
			Dermal vapor to skin			Bystanders	No	NA	Mist not expected from this use pattern. In scenarios involving exposure to TCE vapor, inhalation and dermal exposures are concurrent, with predominate exposure from inhalation. A dermal to inhalation uptake ratio of around 0.1% for vapor to skin scenarios is predicted using IHSkinPerm. Therefore, only the inhalation exposures will be evaluated in these cases.
			Evaporation from the surface (quick decay)		Inhalation	Consumers	Yes	MCCEM, CEM	Inhalation is expected to be the primary route of exposure for users.
			Evaporation from the surface (quick decay)			Bystanders	Yes	MCCEM, CEM	Inhalation is expected to be the primary route of exposure for bystanders.
			Oral swallowing the product directly		Oral	Consumers	No	NA	Mist not expected from this use pattern.
			Oral swallowing the product directly			Bystanders	No	NA	Mist not expected from this use pattern.
Use	Solvents (for cleaning or degreasing)	Spray / aerosol application: Aerosol spray degreaser/cleaner, electronic degreaser, gun scrubber	Dermal contact with liquid product on the skin per event - shorter duration (direct)	Liquid Contact	Dermal	Consumers	Yes	CEM	This use assessed in the U.S. EPA (2014c) risk assessment will be considered in this evaluation to ensure previous assessments are in alignment with the Procedures for Chemical Risk Evaluation under the Amended Toxic Substances Control Act (40 CFR Part 702). TCE in direct contact with skin would be expected to evaporate before significant dermal absorption could occur. However, there may be effects on the skin (e.g., dermal sensitization), or

ED_004056A_00072837-00175

Life Cycle Stage	Category	Subcategory	Release / Exposure Scenario	Exposure Pathway	Exposure Routes	Receptor / Population	Proposed for Further Risk Evaluation	Applicable Modeling Approach	Rationale for Further Evaluation / no Further Evaluation
									certain scenarios with a higher dermal exposure potential, for example, an occluded scenario, wherein liquid TCE is not able to evaporate readily. Therefore, occluded scenarios will be evaluated for systemic and sensitization effects, whereas, non-occluded scenarios will be evaluated for sensitization effects alone.
			Dermal contact with liquid product on the skin per event - shorter duration (direct)			Bystanders	No	NA	Generally, individuals that have contact with liquid TCE would be users and not bystanders. Therefore, direct dermal exposures to liquid TCE are not expected and inhalation is the primary route of exposure for bystanders.
			Oral swallowing the product directly		Oral	Consumers	No	NA	Oral exposures may also occur through hand-to-mouth patterns following dermal contact with TCE. As described, any TCE present on surfaces of the home or skin surfaces is expected to volatilize rapidly – making it available for inhalation as a vapor before oral ingestion may occur through such patterns.
			Oral swallowing the product directly			Bystanders	No	NA	Generally, individuals that have contact with liquid TCE would be users and not bystanders. Therefore, direct oral exposures to liquid TCE are not expected and inhalation is the primary route of exposure for bystanders.
			Dermal contact with liquid product on the skin per event - shorter duration (direct); Dermal vapor to skin	Vapor / Mist	Dermal	Consumers	No	NA	Based on physical chemical properties, mists of TCE are expected to rapidly evaporate before being deposited on skin, thus contributing to the amount of TCE vapor in the air available for inhalation exposure. In scenarios involving exposure to TCE vapor, inhalation and dermal exposures are concurrent, with predominate exposure from inhalation. A dermal to inhalation uptake ratio of around 0.1% for vapor to skin scenarios is predicted using IHSkinPerm. Therefore, only the inhalation exposures will be evaluated in these cases.

ED_004056A_00072837-00176

Life Cycle Stage	Category	Subcategory	Release / Exposure Scenario	Exposure Pathway	Exposure Routes	Receptor / Population	Proposed for Further Risk Evaluation	Applicable Modeling Approach	Rationale for Further Evaluation / no Further Evaluation
			Dermal contact with liquid product on the skin per event - shorter duration (direct); Dermal vapor to skin			Bystanders	No	NA	Based on physical chemical properties, mists of TCE are expected to rapidly evaporate before being deposited on skin, thus contributing to the amount of TCE vapor in the air available for inhalation exposure. In scenarios involving exposure to TCE vapor, inhalation and dermal exposures are concurrent, with predominate exposure from inhalation. A dermal to inhalation uptake ratio of around 0.1% for vapor to skin scenarios is predicted using IHSkinPerm. Therefore, only the inhalation exposures will be evaluated in these cases.
			Spray application (stationary)		Inhalation	Consumers	Yes	MCCEM, CEM	This use assessed in the U.S. EPA (2014c) risk assessment will be considered in this evaluation to ensure previous assessments are in alignment with the Procedures for Chemical Risk Evaluation under the Amended Toxic Substances Control Act (40 CFR Part 702). Inhalation is expected to be the primary route of exposure for users.
			Spray application (stationary)			Bystanders	Yes	MCCEM, CEM	This use assessed in the U.S. EPA (2014c) risk assessment will be considered in this evaluation to ensure previous assessments are in alignment with the Procedures for Chemical Risk Evaluation under the Amended Toxic Substances Control Act (40 CFR Part 702). Inhalation is expected to be the primary route of exposure for bystanders.
			Oral swallowing the product directly		Oral	Consumers	No	NA	Based on physical chemical properties, mists of TCE are expected to be rapidly absorbed in the respiratory tract or evaporate before being introduced into the respiratory tract, thus contributing to the amount of TCE vapor in the air available for inhalation exposure.
			Oral swallowing the product directly			Bystanders	No	NA	Based on physical chemical properties, mists of TCE are expected to be rapidly absorbed in the respiratory tract or evaporate before being introduced into the

ED_004056A_00072837-00177

Life Cycle Stage	Category	Subcategory	Release / Exposure Scenario	Exposure Pathway	Exposure Routes	Receptor / Population	Proposed for Further Risk Evaluation	Applicable Modeling Approach	Rationale for Further Evaluation / no Further Evaluation
									respiratory tract, thus contributing to the amount of TCE vapor in the air available for inhalation exposure.
Use	Lubricants and greases/ lubricants and lubricant additives	Liquid / non-spray application: Penetrating lubricant	Dermal contact with liquid product on the skin per event - shorter duration (direct)	Liquid Contact	Dermal	Consumers	Yes	CEM	TCE in direct contact with skin would be expected to evaporate before significant dermal absorption could occur. However, there may be effects on the skin (e.g., dermal sensitization), or certain scenarios with a higher dermal exposure potential, for example, an occluded scenario, wherein liquid TCE is not able to evaporate readily. Therefore, occluded scenarios will be evaluated for systemic and sensitization effects, whereas, non-occluded scenarios will be evaluated for sensitization effects alone.
			Dermal contact with liquid product on the skin per event - shorter duration (direct)			Bystanders	No	NA	Generally, individuals that have contact with liquid TCE would be users and not bystanders. Therefore, direct dermal exposures to liquid TCE are not expected and inhalation is the primary route of exposure for bystanders.
			Oral swallowing the product directly		Oral	Consumers	No	NA	Oral exposures may also occur through hand-to-mouth patterns following dermal contact with TCE. As described, any TCE present on surfaces of the home or skin surfaces is expected to volatilize rapidly – making it available for inhalation as a vapor before oral ingestion may occur through such patterns.
			Oral swallowing the product directly			Bystanders	No	NA	Generally, individuals that have contact with liquid TCE would be users and not bystanders. Therefore, direct oral exposures to liquid TCE are not expected and inhalation is the primary route of exposure for bystanders.
			Dermal vapor to skin	Vapor	Dermal	Consumers	No	NA	Mist not expected from this use pattern. In scenarios involving exposure to TCE vapor, inhalation and dermal exposures are concurrent, with predominate exposure from inhalation. A dermal to inhalation uptake ratio of around 0.1% for vapor to skin scenarios is predicted using

ED_004056A_00072837-00178

Life Cycle Stage	Category	Subcategory	Release / Exposure Scenario	Exposure Pathway	Exposure Routes	Receptor / Population	Proposed for Further Risk Evaluation	Applicable Modeling Approach	Rationale for Further Evaluation / no Further Evaluation
									IHSkinPerm. Therefore, only the inhalation exposures will be evaluated in these cases.
			Dermal vapor to skin			Bystanders	No	NA	Mist not expected from this use pattern. In scenarios involving exposure to TCE vapor, inhalation and dermal exposures are concurrent, with predominate exposure from inhalation. A dermal to inhalation uptake ratio of around 0.1% for vapor to skin scenarios is predicted using IHSkinPerm. Therefore, only the inhalation exposures will be evaluated in these cases.
			Evaporation from the surface (quick decay)		Inhalation	Consumers	Yes	MCCEM, CEM	Inhalation is expected to be the primary route of exposure for users.
			Evaporation from the surface (quick decay)			Bystanders	Yes	MCCEM, CEM	Inhalation is expected to be the primary route of exposure for bystanders.
			Oral swallowing the product directly		Oral	Consumers	No	NA	Mist not expected from this use pattern.
			Oral swallowing the product directly			Bystanders	No	NA	Mist not expected from this use pattern.
Use	Lubricants and greases/ lubricants and lubricant additives	Spray / aerosol application: Penetrating lubricant	Dermal contact with liquid product on the skin per event - shorter duration (direct)	Liquid Contact	Dermal	Consumers	Yes	CEM	TCE in direct contact with skin would be expected to evaporate before significant dermal absorption could occur. However, there may be effects on the skin (e.g., dermal sensitization), or certain scenarios with a higher dermal exposure potential, for example, an occluded scenario, wherein liquid TCE is not able to evaporate readily. Therefore, occluded scenarios will be evaluated for systemic and sensitization effects, whereas, non-occluded scenarios will be evaluated for sensitization effects alone.

ED_004056A_00072837-00179

Life Cycle Stage	Category	Subcategory	Release / Exposure Scenario	Exposure Pathway	Exposure Routes	Receptor / Population	Proposed for Further Risk Evaluation	Applicable Modeling Approach	Rationale for Further Evaluation / no Further Evaluation
			Dermal contact with liquid product on the skin per event - shorter duration (direct)			Bystanders	No	NA	Generally, individuals that have contact with liquid TCE would be users and not bystanders. Therefore, direct dermal exposures to liquid TCE are not expected and inhalation is the primary route of exposure for bystanders.
			Oral swallowing the product directly		Oral	Consumers	No	NA	Oral exposures may also occur through hand-to-mouth patterns following dermal contact with TCE. As described, any TCE present on surfaces of the home or skin surfaces is expected to volatilize rapidly – making it available for inhalation as a vapor before oral ingestion may occur through such patterns.
			Oral swallowing the product directly			Bystanders	No	NA	Generally, individuals that have contact with liquid TCE would be users and not bystanders. Therefore, direct oral exposures to liquid TCE are not expected and inhalation is the primary route of exposure for bystanders.
			Dermal contact with liquid product on the skin per event - shorter duration (direct); Dermal vapor to skin	Vapor / Mist	Dermal	Consumers	No	NA	Based on physical chemical properties, mists of TCE are expected to rapidly evaporate before being deposited on skin, thus contributing to the amount of TCE vapor in the air available for inhalation exposure. In scenarios involving exposure to TCE vapor, inhalation and dermal exposures are concurrent, with predominate exposure from inhalation. A dermal to inhalation uptake ratio of around 0.1% for vapor to skin scenarios is predicted using IHSkinPerm. Therefore, only the inhalation exposures will be evaluated in these cases.
			Dermal contact with liquid product on the skin per event - shorter duration (direct); Dermal vapor to skin			Bystanders	No	NA	Based on physical chemical properties, mists of TCE are expected to rapidly evaporate before being deposited on skin, thus contributing to the amount of TCE vapor in the air available for inhalation exposure. In scenarios involving exposure to TCE vapor, inhalation and dermal exposures are concurrent, with predominate exposure from inhalation. A

ED_004056A_00072837-00180

Life Cycle Stage	Category	Subcategory	Release / Exposure Scenario	Exposure Pathway	Exposure Routes	Receptor / Population	Proposed for Further Risk Evaluation	Applicable Modeling Approach	Rationale for Further Evaluation / no Further Evaluation
									dermal to inhalation uptake ratio of around 0.1% for vapor to skin scenarios is predicted using IHSkinPerm. Therefore, only the inhalation exposures will be evaluated in these cases.
			Spray application (stationary)		Inhalation	Consumers	Yes	MCCEM, CEM	Inhalation is expected to be the primary route of exposure for users.
			Spray application (stationary)			Bystanders	Yes	MCCEM, CEM	Inhalation is expected to be the primary route of exposure for bystanders.
			Oral swallowing the product directly		Oral	Consumers	No	NA	Based on physical chemical properties, mists of TCE are expected to be rapidly absorbed in the respiratory tract or evaporate before being introduced into the respiratory tract, thus contributing to the amount of TCE vapor in the air available for inhalation exposure.
			Oral swallowing the product directly			Bystanders	No	NA	Based on physical chemical properties, mists of TCE are expected to be rapidly absorbed in the respiratory tract or evaporate before being introduced into the respiratory tract, thus contributing to the amount of TCE vapor in the air available for inhalation exposure.
Use	Adhesives and sealants	Liquid / non-spray application: Mirror edge sealant	Dermal contact with liquid product on the skin per event - shorter duration (direct)	Liquid Contact	Dermal	Consumers	Yes	CEM	TCE in direct contact with skin would be expected to evaporate before significant dermal absorption could occur. However, there may be effects on the skin (e.g., dermal sensitization), or certain scenarios with a higher dermal exposure potential, for example, an occluded scenario, wherein liquid TCE is not able to evaporate readily. Therefore, occluded scenarios will be evaluated for systemic and sensitization effects, whereas, non-occluded scenarios will be evaluated for sensitization effects alone.

ED_004056A_00072837-00181

Life Cycle Stage	Category	Subcategory	Release / Exposure Scenario	Exposure Pathway	Exposure Routes	Receptor / Population	Proposed for Further Risk Evaluation	Applicable Modeling Approach	Rationale for Further Evaluation / no Further Evaluation
			Dermal contact with liquid product on the skin per event - shorter duration (direct)			Bystanders	No	NA	Generally, individuals that have contact with liquid TCE would be users and not bystanders. Therefore, direct dermal exposures to liquid TCE are not expected and inhalation is the primary route of exposure for bystanders.
			Oral swallowing the product directly		Oral	Consumers	No	NA	Oral exposures may also occur through hand-to-mouth patterns following dermal contact with TCE. As described, any TCE present on surfaces of the home or skin surfaces is expected to volatilize rapidly – making it available for inhalation as a vapor before oral ingestion may occur through such patterns.
			Oral swallowing the product directly			Bystanders	No	NA	Generally, individuals that have contact with liquid TCE would be users and not bystanders. Therefore, direct oral exposures to liquid TCE are not expected and inhalation is the primary route of exposure for bystanders.
			Dermal vapor to skin	Vapor	Dermal	Consumers	No	NA	Mist not expected from this use pattern. In scenarios involving exposure to TCE vapor, inhalation and dermal exposures are concurrent, with predominate exposure from inhalation. A dermal to inhalation uptake ratio of around 0.1% for vapor to skin scenarios is predicted using IHSkinPerm. Therefore, only the inhalation exposures will be evaluated in these cases.
			Dermal vapor to skin			Bystanders	No	NA	Mist not expected from this use pattern. In scenarios involving exposure to TCE vapor, inhalation and dermal exposures are concurrent, with predominate exposure from inhalation. A dermal to inhalation uptake ratio of around 0.1% for vapor to skin scenarios is predicted using IHSkinPerm. Therefore, only the inhalation exposures will be evaluated in these cases.
			Evaporation from the surface (slow decay)		Inhalation	Consumers	Yes	MCCEM, CEM	Inhalation is expected to be the primary route of exposure for users.

ED_004056A_00072837-00182

Life Cycle Stage	Category	Subcategory	Release / Exposure Scenario	Exposure Pathway	Exposure Routes	Receptor / Population	Proposed for Further Risk Evaluation	Applicable Modeling Approach	Rationale for Further Evaluation / no Further Evaluation
			Evaporation from the surface (slow decay)			Bystanders	Yes	MCCEM, CEM	Inhalation is expected to be the primary route of exposure for bystanders.
			Oral swallowing the product directly		Oral	Consumers	No	NA	Mist not expected from this use pattern.
			Oral swallowing the product directly			Bystanders	No	NA	Mist not expected from this use pattern.
Use	Adhesives and sealants	Spray / aerosol application: Mirror edge sealant	Dermal contact with liquid product on the skin per event - shorter duration (direct)	Liquid Contact	Dermal	Consumers	Yes	CEM	TCE in direct contact with skin would be expected to evaporate before significant dermal absorption could occur. However, there may be effects on the skin (e.g., dermal sensitization), or certain scenarios with a higher dermal exposure potential, for example, an occluded scenario, wherein liquid TCE is not able to evaporate readily. Therefore, occluded scenarios will be evaluated for systemic and sensitization effects, whereas, non-occluded scenarios will be evaluated for sensitization effects alone.
			Dermal contact with liquid product on the skin per event - shorter duration (direct)			Bystanders	No	NA	Generally, individuals that have contact with liquid TCE would be users and not bystanders. Therefore, direct dermal exposures to liquid TCE are not expected and inhalation is the primary route of exposure for bystanders.
			Oral swallowing the product directly		Oral	Consumers	No	NA	Oral exposures may also occur through hand-to-mouth patterns following dermal contact with TCE. As described, any TCE present on surfaces of the home or skin surfaces is expected to volatilize rapidly – making it available for inhalation as a vapor before oral ingestion may occur through such patterns.
			Oral swallowing the product directly			Bystanders	No	NA	Generally, individuals that have contact with liquid TCE would be users and not bystanders. Therefore, direct oral exposures to liquid TCE are not expected and inhalation is the primary route of exposure for bystanders.

ED_004056A_00072837-00183

Life Cycle Stage	Category	Subcategory	Release / Exposure Scenario	Exposure Pathway	Exposure Routes	Receptor / Population	Proposed for Further Risk Evaluation	Applicable Modeling Approach	Rationale for Further Evaluation / no Further Evaluation
			Dermal contact with liquid product on the skin per event - shorter duration (direct); Dermal vapor to skin	Vapor / Mist	Dermal	Consumers	No	NA	Based on physical chemical properties, mists of TCE are expected to rapidly evaporate before being deposited on skin, thus contributing to the amount of TCE vapor in the air available for inhalation exposure. In scenarios involving exposure to TCE vapor, inhalation and dermal exposures are concurrent, with predominate exposure from inhalation. A dermal to inhalation uptake ratio of around 0.1% for vapor to skin scenarios is predicted using IHSkinPerm. Therefore, only the inhalation exposures will be evaluated in these cases.
			Dermal contact with liquid product on the skin per event - shorter duration (direct); Dermal vapor to skin			Bystanders	No	NA	Based on physical chemical properties, mists of TCE are expected to rapidly evaporate before being deposited on skin, thus contributing to the amount of TCE vapor in the air available for inhalation exposure. In scenarios involving exposure to TCE vapor, inhalation and dermal exposures are concurrent, with predominate exposure from inhalation. A dermal to inhalation uptake ratio of around 0.1% for vapor to skin scenarios is predicted using IHSkinPerm. Therefore, only the inhalation exposures will be evaluated in these cases.
			Spray application (stationary)		Inhalation	Consumers	Yes	MCCEM, CEM	Inhalation is expected to be the primary route of exposure for users.
			Spray application (stationary)			Bystanders	Yes	MCCEM, CEM	Inhalation is expected to be the primary route of exposure for bystanders.
			Oral swallowing the product directly		Oral	Consumers	No	NA	Based on physical chemical properties, mists of TCE are expected to be rapidly absorbed in the respiratory tract or evaporate before being introduced into the respiratory tract, thus contributing to the amount of TCE vapor in the air available for inhalation exposure.

ED_004056A_00072837-00184

Life Cycle Stage	Category	Subcategory	Release / Exposure Scenario	Exposure Pathway	Exposure Routes	Receptor / Population	Proposed for Further Risk Evaluation	Applicable Modeling Approach	Rationale for Further Evaluation / no Further Evaluation
			Oral swallowing the product directly			Bystanders	No	NA	Based on physical chemical properties, mists of TCE are expected to be rapidly absorbed in the respiratory tract or evaporate before being introduced into the respiratory tract, thus contributing to the amount of TCE vapor in the air available for inhalation exposure.
Use	Cleaning and furniture care products	Liquid / non-spray application: Carpet cleaner, cleaning wipes, spot remover	Dermal contact with liquid product on the skin per event - shorter duration (direct)	Liquid Contact	Dermal	Consumers	Yes	CEM	TCE in direct contact with skin would be expected to evaporate before significant dermal absorption could occur. However, there may be effects on the skin (e.g., dermal sensitization), or certain scenarios with a higher dermal exposure potential, for example, an occluded scenario, wherein liquid TCE is not able to evaporate readily. Therefore, occluded scenarios will be evaluated for systemic and sensitization effects, whereas, non-occluded scenarios will be evaluated for sensitization effects alone.
			Dermal contact with liquid product on the skin per event - shorter duration (direct)			Bystanders	No	NA	Generally, individuals that have contact with liquid TCE would be users and not bystanders. Therefore, direct dermal exposures to liquid TCE are not expected and inhalation is the primary route of exposure for bystanders.
			Oral swallowing the product directly		Oral	Consumers	No	NA	Oral exposures may also occur through hand-to-mouth patterns following dermal contact with TCE. As described, any TCE present on surfaces of the home or skin surfaces is expected to volatilize rapidly – making it available for inhalation as a vapor before oral ingestion may occur through such patterns.
			Oral swallowing the product directly			Bystanders	No	NA	Generally, individuals that have contact with liquid TCE would be users and not bystanders. Therefore, direct oral exposures to liquid TCE are not expected and inhalation is the primary route of exposure for bystanders.
			Dermal vapor to skin	Vapor	Dermal	Consumers	No	NA	Mist not expected from this use pattern.

ED_004056A_00072837-00185

Life Cycle Stage	Category	Subcategory	Release / Exposure Scenario	Exposure Pathway	Exposure Routes	Receptor / Population	Proposed for Further Risk Evaluation	Applicable Modeling Approach	Rationale for Further Evaluation / no Further Evaluation
			Dermal vapor to skin			Bystanders	No	NA	Mist not expected from this use pattern.
			Evaporation from the surface (quick decay)		Inhalation	Consumers	Yes	MCCEM, CEM	Inhalation is expected to be the primary route of exposure for users.
			Evaporation from the surface (quick decay)			Bystanders	Yes	MCCEM, CEM	Inhalation is expected to be the primary route of exposure for bystanders.
			Oral swallowing the product directly		Oral	Consumers	No	NA	Mist not expected from this use pattern. In scenarios involving exposure to TCE vapor, inhalation and dermal exposures are concurrent, with predominate exposure from inhalation. A dermal to inhalation uptake ratio of around 0.1% for vapor to skin scenarios is predicted using IHSkinPerm. Therefore, only the inhalation exposures will be evaluated in these cases.
			Oral swallowing the product directly			Bystanders	No	NA	Mist not expected from this use pattern. In scenarios involving exposure to TCE vapor, inhalation and dermal exposures are concurrent, with predominate exposure from inhalation. A dermal to inhalation uptake ratio of around 0.1% for vapor to skin scenarios is predicted using IHSkinPerm. Therefore, only the inhalation exposures will be evaluated in these cases.
			Dermal contact with liquid product on the skin (direct)	Contact with treated surface	Dermal	Bystanders	No	NA	There is potential for bystanders to have indirect dermal contact via contact with a surface upon which TCE has been applied (e.g., counter, floor). Based on the expectation that TCE would evaporate from a surface rapidly (i.e., likely before such indirect contact occurs), this route is unlikely to contribute significantly to overall exposure to bystanders.
			Oral swallowing the product directly		Oral	Bystanders	No	NA	Oral exposures may also occur through hand-to-mouth patterns following dermal contact with TCE. As described, dermal contact would not be expected for bystanders, and any TCE present on surfaces of the home or skin surfaces is

ED_004056A_00072837-00186

Life Cycle Stage	Category	Subcategory	Release / Exposure Scenario	Exposure Pathway	Exposure Routes	Receptor / Population	Proposed for Further Risk Evaluation	Applicable Modeling Approach	Rationale for Further Evaluation / no Further Evaluation
									expected to volatilize rapidly – making it available for inhalation as a vapor before oral ingestion may occur through such patterns.
Use	Cleaning and furniture care products	Spray / aerosol application: Carpet cleaner, spot remover	Dermal contact with liquid product on the skin per event - shorter duration (direct)	Liquid Contact	Dermal	Consumers	Yes	CEM	TCE in direct contact with skin would be expected to evaporate before significant dermal absorption could occur. However, there may be effects on the skin (e.g., dermal sensitization), or certain scenarios with a higher dermal exposure potential, for example, an occluded scenario, wherein liquid TCE is not able to evaporate readily. Therefore, occluded scenarios will be evaluated for systemic and sensitization effects, whereas, non-occluded scenarios will be evaluated for sensitization effects alone.
			Dermal contact with liquid product on the skin per event - shorter duration (direct)			Bystanders	No	NA	Generally, individuals that have contact with liquid TCE would be users and not bystanders. Therefore, direct dermal exposures to liquid TCE are not expected and inhalation is the primary route of exposure for bystanders.
			Oral swallowing the product directly		Oral	Consumers	No	NA	Oral exposures may also occur through hand-to-mouth patterns following dermal contact with TCE. As described, any TCE present on surfaces of the home or skin surfaces is expected to volatilize rapidly – making it available for inhalation as a vapor before oral ingestion may occur through such patterns.
			Oral swallowing the product directly			Bystanders	No	NA	Generally, individuals that have contact with liquid TCE would be users and not bystanders. Therefore, direct oral exposures to liquid TCE are not expected and inhalation is the primary route of exposure for bystanders.

ED_004056A_00072837-00187

Life Cycle Stage	Category	Subcategory	Release / Exposure Scenario	Exposure Pathway	Exposure Routes	Receptor / Population	Proposed for Further Risk Evaluation	Applicable Modeling Approach	Rationale for Further Evaluation / no Further Evaluation
			Dermal contact with liquid product on the skin per event - shorter duration (direct); Dermal vapor to skin	Vapor / Mist	Dermal	Consumers	No	NA	Based on physical chemical properties, mists of TCE are expected to rapidly evaporate before being deposited on skin, thus contributing to the amount of TCE vapor in the air available for inhalation exposure. In scenarios involving exposure to TCE vapor, inhalation and dermal exposures are concurrent, with predominate exposure from inhalation. A dermal to inhalation uptake ratio of around 0.1% for vapor to skin scenarios is predicted using IHSkinPerm. Therefore, only the inhalation exposures will be evaluated in these cases.
			Dermal contact with liquid product on the skin per event - shorter duration (direct); Dermal vapor to skin			Bystanders	No	NA	Based on physical chemical properties, mists of TCE are expected to rapidly evaporate before being deposited on skin, thus contributing to the amount of TCE vapor in the air available for inhalation exposure. In scenarios involving exposure to TCE vapor, inhalation and dermal exposures are concurrent, with predominate exposure from inhalation. A dermal to inhalation uptake ratio of around 0.1% for vapor to skin scenarios is predicted using IHSkinPerm. Therefore, only the inhalation exposures will be evaluated in these cases.
			Spray application (stationary)		Inhalation	Consumers	Yes	MCCEM, CEM	Inhalation is expected to be the primary route of exposure for users.
			Spray application (stationary)			Bystanders	Yes	MCCEM, CEM	Inhalation is expected to be the primary route of exposure for bystanders.
			Oral swallowing the product directly		Oral	Consumers	No	NA	Based on physical chemical properties, mists of TCE are expected to be rapidly absorbed in the respiratory tract or evaporate before being introduced into the respiratory tract, thus contributing to the amount of TCE vapor in the air available for inhalation exposure.

ED_004056A_00072837-00188

Life Cycle Stage	Category	Subcategory	Release / Exposure Scenario	Exposure Pathway	Exposure Routes	Receptor / Population	Proposed for Further Risk Evaluation	Applicable Modeling Approach	Rationale for Further Evaluation / no Further Evaluation
			Oral swallowing the product directly			Bystanders	No	NA	Based on physical chemical properties, mists of TCE are expected to be rapidly absorbed in the respiratory tract or evaporate before being introduced into the respiratory tract, thus contributing to the amount of TCE vapor in the air available for inhalation exposure.
			Dermal contact with liquid product on the skin (direct)	Contact with treated surface	Dermal	Bystanders	No	NA	There is potential for bystanders to have indirect dermal contact via contact with a surface upon which TCE has been applied (e.g., counter, floor). Based on the expectation that TCE would evaporate from a surface rapidly (i.e., likely before such indirect contact occurs), this route is unlikely to contribute significantly to overall exposure to bystanders.
			Oral swallowing the product directly		Oral	Bystanders	No	NA	Oral exposures may also occur through hand-to-mouth patterns following dermal contact with TCE. As described, dermal contact would not be expected for bystanders, and any TCE present on surfaces of the home or skin surfaces is expected to volatilize rapidly – making it available for inhalation as a vapor before oral ingestion may occur through such patterns.
Use	Arts, crafts and hobby materials	Spray / aerosol application: Fixatives and coatings	Dermal contact with liquid product on the skin per event - shorter duration (direct)	Liquid Contact	Dermal	Consumers	Yes	CEM	This use assessed in the U.S. EPA (U.S. EPA, 2014c) risk assessment will be considered in this evaluation to ensure previous assessments are in alignment with the Procedures for Chemical Risk Evaluation under the Amended Toxic Substances Control Act (40 CFR Part 702). TCE in direct contact with skin would be expected to evaporate before significant dermal absorption could occur. However, there may be effects on the skin (e.g., dermal sensitization), or certain scenarios with a higher dermal exposure potential, for example, an occluded scenario, wherein liquid TCE is not able to evaporate readily. Therefore, occluded scenarios will be evaluated for systemic

ED_004056A_00072837-00189

Life Cycle Stage	Category	Subcategory	Release / Exposure Scenario	Exposure Pathway	Exposure Routes	Receptor / Population	Proposed for Further Risk Evaluation	Applicable Modeling Approach	Rationale for Further Evaluation / no Further Evaluation
									and sensitization effects, whereas, non-occluded scenarios will be evaluated for sensitization effects alone.
			Dermal contact with liquid product on the skin per event - shorter duration (direct)			Bystanders	No	NA	Generally, individuals that have contact with liquid TCE would be users and not bystanders. Therefore, direct dermal exposures to liquid TCE are not expected and inhalation is the primary route of exposure for bystanders.
			Oral swallowing the product directly		Oral	Consumers	No	NA	Oral exposures may also occur through hand-to-mouth patterns following dermal contact with TCE. As described, any TCE present on surfaces of the home or skin surfaces is expected to volatilize rapidly – making it available for inhalation as a vapor before oral ingestion may occur through such patterns.
			Oral swallowing the product directly			Bystanders	No	NA	Generally, individuals that have contact with liquid TCE would be users and not bystanders. Therefore, direct oral exposures to liquid TCE are not expected and inhalation is the primary route of exposure for bystanders.
			Dermal contact with liquid product on the skin per event - shorter duration (direct); Dermal vapor to skin	Vapor / Mist	Dermal	Consumers	No	NA	Based on physical chemical properties, mists of TCE are expected to rapidly evaporate before being deposited on skin, thus contributing to the amount of TCE vapor in the air available for inhalation exposure. In scenarios involving exposure to TCE vapor, inhalation and dermal exposures are concurrent, with predominate exposure from inhalation. A dermal to inhalation uptake ratio of around 0.1% for vapor to skin scenarios is predicted using IHSkinPerm. Therefore, only the inhalation exposures will be evaluated in these cases.

ED_004056A_00072837-00190

Life Cycle Stage	Category	Subcategory	Release / Exposure Scenario	Exposure Pathway	Exposure Routes	Receptor / Population	Proposed for Further Risk Evaluation	Applicable Modeling Approach	Rationale for Further Evaluation / no Further Evaluation
			Dermal contact with liquid product on the skin per event - shorter duration (direct); Dermal vapor to skin			Bystanders	No	NA	Based on physical chemical properties, mists of TCE are expected to rapidly evaporate before being deposited on skin, thus contributing to the amount of TCE vapor in the air available for inhalation exposure. In scenarios involving exposure to TCE vapor, inhalation and dermal exposures are concurrent, with predominate exposure from inhalation. A dermal to inhalation uptake ratio of around 0.1% for vapor to skin scenarios is predicted using IHSkinPerm. Therefore, only the inhalation exposures will be evaluated in these cases.
			Spray application (stationary)		Inhalation	Consumers	Yes	MCCEM, CEM	This use assessed in the U.S. EPA (2014c) risk assessment will be considered in this evaluation to ensure previous assessments are in alignment with the Procedures for Chemical Risk Evaluation under the Amended Toxic Substances Control Act (40 CFR Part 702). Inhalation is expected to be the primary route of exposure for users.
			Spray application (stationary)			Bystanders	Yes	MCCEM, CEM	This use assessed in the U.S. EPA (2014c) risk assessment will be considered in this evaluation to ensure previous assessments are in alignment with the Procedures for Chemical Risk Evaluation under the Amended Toxic Substances Control Act (40 CFR Part 702). Inhalation is expected to be the primary route of exposure for bystanders.
			Oral swallowing the product directly		Oral	Consumers	No	NA	Based on physical chemical properties, mists of TCE are expected to be rapidly absorbed in the respiratory tract or evaporate before being introduced into the respiratory tract, thus contributing to the amount of TCE vapor in the air available for inhalation exposure.
			Oral swallowing the product directly			Bystanders	No	NA	Based on physical chemical properties, mists of TCE are expected to be rapidly absorbed in the respiratory tract or evaporate before being introduced into the

ED_004056A_00072837-00191

Life Cycle Stage	Category	Subcategory	Release / Exposure Scenario	Exposure Pathway	Exposure Routes	Receptor / Population	Proposed for Further Risk Evaluation	Applicable Modeling Approach	Rationale for Further Evaluation / no Further Evaluation
									respiratory tract, thus contributing to the amount of TCE vapor in the air available for inhalation exposure.
Use	Automotive care products	Liquid / non-spray application: Brake and parts cleaner	Dermal contact with liquid product on the skin per event - shorter duration (direct)	Liquid Contact	Dermal	Consumers	Yes	CEM	TCE in direct contact with skin would be expected to evaporate before significant dermal absorption could occur. However, there may be effects on the skin (e.g., dermal sensitization), or certain scenarios with a higher dermal exposure potential, for example, an occluded scenario, wherein liquid TCE is not able to evaporate readily. Therefore, occluded scenarios will be evaluated for systemic and sensitization effects, whereas, non-occluded scenarios will be evaluated for sensitization effects alone.
			Dermal contact with liquid product on the skin per event - shorter duration (direct)			Bystanders	No	NA	Generally, individuals that have contact with liquid TCE would be users and not bystanders. Therefore, direct dermal exposures to liquid TCE are not expected and inhalation is the primary route of exposure for bystanders.
			Oral swallowing the product directly		Oral	Consumers	No	NA	Oral exposures may also occur through hand-to-mouth patterns following dermal contact with TCE. As described, any TCE present on surfaces of the home or skin surfaces is expected to volatilize rapidly – making it available for inhalation as a vapor before oral ingestion may occur through such patterns.
			Oral swallowing the product directly			Bystanders	No	NA	Generally, individuals that have contact with liquid TCE would be users and not bystanders. Therefore, direct oral exposures to liquid TCE are not expected and inhalation is the primary route of exposure for bystanders.
			Dermal vapor to skin	Vapor	Dermal	Consumers	No	NA	Mist not expected from this use pattern. In scenarios involving exposure to TCE vapor, inhalation and dermal exposures are concurrent, with predominate exposure from inhalation. A dermal to inhalation uptake ratio of around 0.1% for vapor to skin scenarios is predicted using

ED_004056A_00072837-00192

Life Cycle Stage	Category	Subcategory	Release / Exposure Scenario	Exposure Pathway	Exposure Routes	Receptor / Population	Proposed for Further Risk Evaluation	Applicable Modeling Approach	Rationale for Further Evaluation / no Further Evaluation
									IHSkinPerm. Therefore, only the inhalation exposures will be evaluated in these cases.
			Dermal vapor to skin			Bystanders	No	NA	Mist not expected from this use pattern. In scenarios involving exposure to TCE vapor, inhalation and dermal exposures are concurrent, with predominate exposure from inhalation. A dermal to inhalation uptake ratio of around 0.1% for vapor to skin scenarios is predicted using IHSkinPerm. Therefore, only the inhalation exposures will be evaluated in these cases.
			Evaporation from the surface (quick decay)		Inhalation	Consumers	Yes	MCCEM, CEM	Inhalation is expected to be the primary route of exposure for users.
			Evaporation from the surface (quick decay)			Bystanders	Yes	MCCEM, CEM	Inhalation is expected to be the primary route of exposure for bystanders.
			Oral swallowing the product directly		Oral	Consumers	No	NA	Mist not expected from this use pattern.
			Oral swallowing the product directly			Bystanders	No	NA	Mist not expected from this use pattern.
Use	Automotive care products	Spray / aerosol application: Brake and parts cleaner	Dermal contact with liquid product on the skin per event - shorter duration (direct)	Liquid Contact	Dermal	Consumers	Yes	CEM	TCE in direct contact with skin would be expected to evaporate before significant dermal absorption could occur. However, there may be effects on the skin (e.g., dermal sensitization), or certain scenarios with a higher dermal exposure potential, for example, an occluded scenario, wherein liquid TCE is not able to evaporate readily. Therefore, occluded scenarios will be evaluated for systemic and sensitization effects, whereas, non-occluded scenarios will be evaluated for sensitization effects alone.

ED_004056A_00072837-00193

Life Cycle Stage	Category	Subcategory	Release / Exposure Scenario	Exposure Pathway	Exposure Routes	Receptor / Population	Proposed for Further Risk Evaluation	Applicable Modeling Approach	Rationale for Further Evaluation / no Further Evaluation
			Dermal contact with liquid product on the skin per event - shorter duration (direct)			Bystanders	No	NA	Generally, individuals that have contact with liquid TCE would be users and not bystanders. Therefore, direct dermal exposures to liquid TCE are not expected and inhalation is the primary route of exposure for bystanders.
			Oral swallowing the product directly		Oral	Consumers	No	NA	Oral exposures may also occur through hand-to-mouth patterns following dermal contact with TCE. As described, any TCE present on surfaces of the home or skin surfaces is expected to volatilize rapidly – making it available for inhalation as a vapor before oral ingestion may occur through such patterns.
			Oral swallowing the product directly			Bystanders	No	NA	Generally, individuals that have contact with liquid TCE would be users and not bystanders. Therefore, direct oral exposures to liquid TCE are not expected and inhalation is the primary route of exposure for bystanders.
			Dermal contact with liquid product on the skin per event - shorter duration (direct); Dermal vapor to skin	Vapor / Mist	Dermal	Consumers	No	NA	Based on physical chemical properties, mists of TCE are expected to rapidly evaporate before being deposited on skin, thus contributing to the amount of TCE vapor in the air available for inhalation exposure. In scenarios involving exposure to TCE vapor, inhalation and dermal exposures are concurrent, with predominate exposure from inhalation. A dermal to inhalation uptake ratio of around 0.1% for vapor to skin scenarios is predicted using IHSkinPerm. Therefore, only the inhalation exposures will be evaluated in these cases.
			Dermal contact with liquid product on the skin per event - shorter duration (direct); Dermal vapor to skin			Bystanders	No	NA	Based on physical chemical properties, mists of TCE are expected to rapidly evaporate before being deposited on skin, thus contributing to the amount of TCE vapor in the air available for inhalation exposure. In scenarios involving exposure to TCE vapor, inhalation and dermal exposures are concurrent, with predominate exposure from inhalation. A

ED_004056A_00072837-00194

Life Cycle Stage	Category	Subcategory	Release / Exposure Scenario	Exposure Pathway	Exposure Routes	Receptor / Population	Proposed for Further Risk Evaluation	Applicable Modeling Approach	Rationale for Further Evaluation / no Further Evaluation
									dermal to inhalation uptake ratio of around 0.1% for vapor to skin scenarios is predicted using IHSkinPerm. Therefore, only the inhalation exposures will be evaluated in these cases.
			Spray application (stationary)		Inhalation	Consumers	Yes	MCCEM, CEM	Inhalation is expected to be the primary route of exposure for users.
			Spray application (stationary)			Bystanders	Yes	MCCEM, CEM	Inhalation is expected to be the primary route of exposure for bystanders.
			Oral swallowing the product directly		Oral	Consumers	No	NA	Based on physical chemical properties, mists of TCE are expected to be rapidly absorbed in the respiratory tract or evaporate before being introduced into the respiratory tract, thus contributing to the amount of TCE vapor in the air available for inhalation exposure.
			Oral swallowing the product directly			Bystanders	No	NA	Based on physical chemical properties, mists of TCE are expected to be rapidly absorbed in the respiratory tract or evaporate before being introduced into the respiratory tract, thus contributing to the amount of TCE vapor in the air available for inhalation exposure.
Use	Other uses	Liquid / non-spray application: Hoof polish, film cleaner	Dermal contact with liquid product on the skin per event - shorter duration (direct)	Liquid Contact	Dermal	Consumers	Yes	CEM	TCE in direct contact with skin would be expected to evaporate before significant dermal absorption could occur. However, there may be effects on the skin (e.g., dermal sensitization), or certain scenarios with a higher dermal exposure potential, for example, an occluded scenario, wherein liquid TCE is not able to evaporate readily. Therefore, occluded scenarios will be evaluated for systemic and sensitization effects, whereas, non-occluded scenarios will be evaluated for sensitization effects alone.

ED_004056A_00072837-00195

Life Cycle Stage	Category	Subcategory	Release / Exposure Scenario	Exposure Pathway	Exposure Routes	Receptor / Population	Proposed for Further Risk Evaluation	Applicable Modeling Approach	Rationale for Further Evaluation / no Further Evaluation
			Dermal contact with liquid product on the skin per event - shorter duration (direct)			Bystanders	No	NA	Generally, individuals that have contact with liquid TCE would be users and not bystanders. Therefore, direct dermal exposures to liquid TCE are not expected and inhalation is the primary route of exposure for bystanders.
			Oral swallowing the product directly		Oral	Consumers	No	NA	Oral exposures may also occur through hand-to-mouth patterns following dermal contact with TCE. As described, any TCE present on surfaces of the home or skin surfaces is expected to volatilize rapidly – making it available for inhalation as a vapor before oral ingestion may occur through such patterns.
			Oral swallowing the product directly			Bystanders	No	NA	Generally, individuals that have contact with liquid TCE would be users and not bystanders. Therefore, direct oral exposures to liquid TCE are not expected and inhalation is the primary route of exposure for bystanders.
			Dermal vapor to skin	Vapor	Dermal	Consumers	No	NA	Mist not expected from this use pattern. In scenarios involving exposure to TCE vapor, inhalation and dermal exposures are concurrent, with predominate exposure from inhalation. A dermal to inhalation uptake ratio of around 0.1% for vapor to skin scenarios is predicted using IHSkinPerm. Therefore, only the inhalation exposures will be evaluated in these cases.
			Dermal vapor to skin			Bystanders	No	NA	Mist not expected from this use pattern. In scenarios involving exposure to TCE vapor, inhalation and dermal exposures are concurrent, with predominate exposure from inhalation. A dermal to inhalation uptake ratio of around 0.1% for vapor to skin scenarios is predicted using IHSkinPerm. Therefore, only the inhalation exposures will be evaluated in these cases.
			Evaporation from the surface (quick decay)		Inhalation	Consumers	Yes	MCCEM, CEM	Inhalation is expected to be the primary route of exposure for users.

ED_004056A_00072837-00196

Life Cycle Stage	Category	Subcategory	Release / Exposure Scenario	Exposure Pathway	Exposure Routes	Receptor / Population	Proposed for Further Risk Evaluation	Applicable Modeling Approach	Rationale for Further Evaluation / no Further Evaluation
			Evaporation from the surface (quick decay)			Bystanders	Yes	MCCEM, CEM	Inhalation is expected to be the primary route of exposure for bystanders.
			Oral swallowing the product directly		Oral	Consumers	No	NA	Mist not expected from this use pattern.
			Oral swallowing the product directly			Bystanders	No	NA	Mist not expected from this use pattern.
Use	Other uses	Spray / aerosol application: Pepper spray, film cleaner	Dermal contact with liquid product on the skin per event - shorter duration (direct)	Liquid Contact	Dermal	Consumers	Yes	CEM	TCE in direct contact with skin would be expected to evaporate before significant dermal absorption could occur. However, there may be effects on the skin (e.g., dermal sensitization), or certain scenarios with a higher dermal exposure potential, for example, an occluded scenario, wherein liquid TCE is not able to evaporate readily. Therefore, occluded scenarios will be evaluated for systemic and sensitization effects, whereas, non-occluded scenarios will be evaluated for sensitization effects alone.
			Dermal contact with liquid product on the skin per event - shorter duration (direct)			Bystanders	No	NA	Generally, individuals that have contact with liquid TCE would be users and not bystanders. Therefore, direct dermal exposures to liquid TCE are not expected and inhalation is the primary route of exposure for bystanders.
			Oral swallowing the product directly		Oral	Consumers	No	NA	Oral exposures may also occur through hand-to-mouth patterns following dermal contact with TCE. As described, any TCE present on surfaces of the home or skin surfaces is expected to volatilize rapidly – making it available for inhalation as a vapor before oral ingestion may occur through such patterns.
			Oral swallowing the product directly			Bystanders	No	NA	Generally, individuals that have contact with liquid TCE would be users and not bystanders. Therefore, direct oral exposures to liquid TCE are not expected and inhalation is the primary route of exposure for bystanders.

ED_004056A_00072837-00197

Life Cycle Stage	Category	Subcategory	Release / Exposure Scenario	Exposure Pathway	Exposure Routes	Receptor / Population	Proposed for Further Risk Evaluation	Applicable Modeling Approach	Rationale for Further Evaluation / no Further Evaluation
			Dermal contact with liquid product on the skin per event - shorter duration (direct); Dermal vapor to skin	Vapor / Mist	Dermal	Consumers	No	NA	Based on physical chemical properties, mists of TCE are expected to rapidly evaporate before being deposited on skin, thus contributing to the amount of TCE vapor in the air available for inhalation exposure. In scenarios involving exposure to TCE vapor, inhalation and dermal exposures are concurrent, with predominate exposure from inhalation. A dermal to inhalation uptake ratio of around 0.1% for vapor to skin scenarios is predicted using IHSkinPerm. Therefore, only the inhalation exposures will be evaluated in these cases.
			Dermal contact with liquid product on the skin per event - shorter duration (direct); Dermal vapor to skin			Bystanders	No	NA	Based on physical chemical properties, mists of TCE are expected to rapidly evaporate before being deposited on skin, thus contributing to the amount of TCE vapor in the air available for inhalation exposure. In scenarios involving exposure to TCE vapor, inhalation and dermal exposures are concurrent, with predominate exposure from inhalation. A dermal to inhalation uptake ratio of around 0.1% for vapor to skin scenarios is predicted using IHSkinPerm. Therefore, only the inhalation exposures will be evaluated in these cases.
			Spray application (stationary)		Inhalation	Consumers	Yes	MCCEM, CEM	Inhalation is expected to be the primary route of exposure for users.
			Spray application (stationary)			Bystanders	Yes	MCCEM, CEM	Inhalation is expected to be the primary route of exposure for bystanders.
			Oral swallowing the product directly		Oral	Consumers	No	NA	Based on physical chemical properties, mists of TCE are expected to be rapidly absorbed in the respiratory tract or evaporate before being introduced into the respiratory tract, thus contributing to the amount of TCE vapor in the air available for inhalation exposure.

ED_004056A_00072837-00198

Life Cycle Stage	Category	Subcategory	Release / Exposure Scenario	Exposure Pathway	Exposure Routes	Receptor / Population	Proposed for Further Risk Evaluation	Applicable Modeling Approach	Rationale for Further Evaluation / no Further Evaluation
			Oral swallowing the product directly			Bystanders	No	NA	Based on physical chemical properties, mists of TCE are expected to be rapidly absorbed in the respiratory tract or evaporate before being introduced into the respiratory tract, thus contributing to the amount of TCE vapor in the air available for inhalation exposure.
Disposal	Consumer Handling and Disposal of Waste	Disposal of TCE wastes	Consumer handling of spent consumer products	Liquid Contact	Dermal / Oral	Consumers	No	NA	Consumer products containing TCE are expected to be primarily disposed of in original containers, thus limiting direct exposures to TCE during disposal or handling. Disposal of spent products are expected to be taken to municipal landfill sites and collected and disposed of as part of their waste handling practices. Any exposures associated with TCE-containing consumer products are expected to be significantly higher during use than during disposal or handling. Therefore, evaluation of the use-associated exposures is anticipated to reflect the worst-case exposure scenario for a specific product.
						Bystanders	No	NA	Consumer products containing TCE are expected to be primarily disposed of in original containers, thus limiting direct exposures to TCE during disposal or handling. Disposal of spent products are expected to be taken to municipal landfill sites and collected and disposed of as part of their waste handling practices. Any exposures associated with TCE-containing consumer products are expected to be significantly higher during use than during disposal or handling. Therefore, evaluation of the use-associated exposures is anticipated to reflect the worst-case exposure scenario for a specific product.
				Vapor	Dermal / Oral	Consumers	No	NA	Consumer products containing TCE are expected to be primarily disposed of in original containers, thus limiting direct exposures to TCE during disposal or handling. Disposal of spent products are expected to be taken to municipal landfill

ED_004056A_00072837-00199

Life Cycle Stage	Category	Subcategory	Release / Exposure Scenario	Exposure Pathway	Exposure Routes	Receptor / Population	Proposed for Further Risk Evaluation	Applicable Modeling Approach	Rationale for Further Evaluation / no Further Evaluation
									sites and collected and disposed of as part of their waste handling practices. Any exposures associated with TCE-containing consumer products are expected to be significantly higher during use than during disposal or handling. Therefore, evaluation of the use-associated exposures is anticipated to reflect the worst-case exposure scenario for a specific product.
						Bystanders	No	NA	Consumer products containing TCE are expected to be primarily disposed of in original containers, thus limiting direct exposures to TCE during disposal or handling. Disposal of spent products are expected to be taken to municipal landfill sites and collected and disposed of as part of their waste handling practices. Any exposures associated with TCE-containing consumer products are expected to be significantly higher during use than during disposal or handling. Therefore, evaluation of the use-associated exposures is anticipated to reflect the worst-case exposure scenario for a specific product.
					Inhalation	Consumers	No	NA	Consumer products containing TCE are expected to be primarily disposed of in original containers, thus limiting direct exposures to TCE during disposal or handling. Disposal of spent products are expected to be taken to municipal landfill sites and collected and disposed of as part of their waste handling practices. Any exposures associated with TCE-containing consumer products are expected to be significantly higher during use than during disposal or handling. Therefore, evaluation of the use-associated exposures is anticipated to reflect the worst-case exposure scenario for a specific product.

ED_004056A_00072837-00200

Life Cycle Stage	Category	Subcategory	Release / Exposure Scenario	Exposure Pathway	Exposure Routes	Receptor / Population	Proposed for Further Risk Evaluation	Applicable Modeling Approach	Rationale for Further Evaluation / no Further Evaluation
						Bystanders	No	NA	Consumer products containing TCE are expected to be primarily disposed of in original containers, thus limiting direct exposures to TCE during disposal or handling. Disposal of spent products are expected to be taken to municipal landfill sites and collected and disposed of as part of their waste handling practices. Any exposures associated with TCE-containing consumer products are expected to be significantly higher during use than during disposal or handling. Therefore, evaluation of the use-associated exposures is anticipated to reflect the worst-case exposure scenario for a specific product.

ED_004056A_00072837-00201

Appendix E SUPPORTING TABLE FOR ENVIRONMENTAL RELEASES AND WASTES CONCEPTUAL MODEL

Table_Apx E-1. Environmental Releases and Wastes Conceptual Model Supporting Table

(Note that rows shaded in gray are not proposed for further analysis)

Life Cycle Stage	Releases and Wastes from Industrial / Commercial / Consumer Uses		Release / Exposure Scenario	Exposure Pathway	Exposure Route	Receptor	Proposed for Further Analysis	Applicable Modeling Approach	Rationale for Further Evaluation / no Further Evaluation
Manufacturing, Processing, Use, and/or Disposal	Wastewater or Liquid Wastes	Industrial pre-treatment or indirect discharge to POTW	Direct discharge to surface water	Surface water	Not applicable to ecological receptors	Aquatic Species	Yes	E-FAST, VVWM	Within the past ten years of surface water monitoring data from STORET, there are detections (e.g., maximum of 50 ppb and average of 4.5 ppb), that do not exceed the acute COC for TCE, 340 ppb, but do exceed the chronic COC, 3 ppb.
Manufacturing, Processing, Use, and/or Disposal	Wastewater or Liquid Wastes	Industrial pre-treatment or indirect discharge to POTW	Direct discharge to surface water	Surface water	Not applicable to ecological receptors	Terrestrial Species	No	NA	Review of hazard data for terrestrial organisms shows that there is likely to be hazard; however, physical chemical properties do not support an exposure pathway through water and soil pathways to these organisms. TCE has a predicted 81% wastewater treatment removal efficiency, predominately due to volatilization during aeration.
Manufacturing, Processing, Use, and/or Disposal	Wastewater or Liquid Wastes	Industrial pre-treatment or indirect discharge to POTW	Direct discharge to surface water	Sediment: surface water to sediment	Not applicable to ecological receptors	Aquatic Species	No	NA	TCE is released to surface water from ongoing industrial and/or commercial activities, as reported in recent TRI and DMR release and loading data. However, TCE released to surface water is expected to primarily volatilize; thus, it is not expected that a significant portion of TCE would be available to enter the sediment compartment.
Manufacturing, Processing, Use, and/or Disposal	Wastewater or Liquid Wastes	Industrial pre-treatment or indirect discharge to POTW	Partitioning to biosolids	Soil: biosolids to soil	Not applicable to ecological receptors	Terrestrial Species	No	NA	Based on TCE's fate properties, it is not anticipated to partition to biosolids during wastewater treatment. TCE has a predicted 81% wastewater treatment removal efficiency, predominately due to volatilization during aeration. Any TCE present in the water portion of biosolids following wastewater treatment and land application would be expected to rapidly volatilize into air. Beyond these fate-based considerations, TCE is subject to RCRA land disposal restrictions under (40 CFR 268) and is considered a prohibited waste (organics toxicity characteristic) with land disposal restriction treatment standards that must be met prior to land disposal.

ED_004056A_00072837-00202

Appendix F INCLUSION AND EXCLUSION CRITERIA FOR FULL TEXT SCREENING

Appendix F contains the eligibility criteria for various data streams informing the TSCA risk evaluation: environmental fate; engineering and occupational exposure; exposure to consumers; and human health hazard. The criteria are applied to the *on-topic* references that were identified following title and abstract screening of the comprehensive search results published on June 22, 2017.

Systematic reviews typically describe the study eligibility criteria in the form of PECO statements or a modified framework. PECO stands for Population, Exposure, Comparator and Outcome and the approach is used to formulate explicit and detailed criteria about those characteristics in the publication that should be present in order to be eligible for inclusion in the review. EPA/OPPT adopted the PECO approach to guide the inclusion/exclusion decisions during full text screening.

Inclusion and exclusion criteria were also used during the title and abstract screening, and documentation about the criteria can be found in the *Strategy for Conducting Literature Searches* document published in June 2017 along with each of the TSCA Scope documents. The list of *on-topic* references resulting from the title and abstract screening is undergoing full text screening using the criteria in the PECO statements. The overall objective of the screening process is to select the most relevant evidence for the TSCA risk evaluation. As a general rule, EPA is excluding non-English data/information sources and will translate on a case by case basis.

The inclusion and exclusion criteria for ecotoxicological data have been documented in the ECOTOX SOPs. The criteria can be found at https://cfpub.epa.gov/ecotox/help.cfm?helptabs=tab4) and in the *Strategy for Conducting Literature Searches* document published along with each of the TSCA Scope documents.

F.1 Inclusion Criteria for Data Sources Reporting Environmental Fate Data

EPA/OPPT developed a generic PESO statement to guide the full text screening of environmental fate data sources. PESO stands for Pathways and Processes, Exposure, Setting or Scenario, and Outcomes. Subsequent versions of the PESO statement may be produced throughout the process of screening and evaluating data for the chemicals undergoing TSCA risk evaluation. Studies that comply with the inclusion criteria in the PESO statement are eligible for inclusion, considered for evaluation, and possibly included in the environmental fate assessment. On the other hand, data sources are excluded if they do not meet the criteria in the PESO statement.

EPA describes the expected exposure pathways to human receptors from consumer uses of trichloroethylene that EPA plans to include in the risk evaluation in Section 2.5.2. EPA expects that the primary route of exposure for consumers will be via inhalation. There may also be dermal exposure. Environmental fate data will not be used to further assess these exposure pathways as they are expected to occur in the indoor environment.

During problem formulation, exposure pathways to human and ecological receptors from environmental releases and waste stream associated with industrial and commercial activities will not be further analyzed in risk evaluation. For a description of the rationale behind this conclusion, see Section 2.5.3.2 and Section 2.5.3.3 . In the absence of exposure pathways for further analysis, environmental fate data will not be further evaluated. Therefore, PESO statements describing fate endpoints, associated

ED_004056A_00072837-00203

processes, media and exposure pathways that were considered in the development of the environmental fate assessment for trichloroethylene will not be presented.

F.2 Inclusion Criteria for Data Sources Reporting Engineering and Occupational Exposure Data

EPA/OPPT developed a generic RESO statement to guide the full text screening of engineering and occupational exposure literature (Table_Apx F-1). RESO stands for Receptors, Exposure, Setting or Scenario, and Outcomes. Subsequent versions of the RESO statement may be produced throughout the process of screening and evaluating data for the chemicals undergoing TSCA risk evaluation. Studies that comply with the inclusion criteria specified in the RESO statement will be eligible for inclusion, considered for evaluation, and possibly included in the environmental release and occupational exposure assessments, while those that do not meet these criteria will be excluded.

The RESO statement should be used along with the engineering and occupational exposure data needs table (Table_Apx F-2) when screening the literature.

Table_Apx F-1. Inclusion Criteria for Data Sources Reporting Engineering and Occupational Exposure Data

RESO Element	Evidence
Receptors	• **Humans:** Workers, including occupational non-users Please refer to the conceptual models for more information about the ecological and human receptors included in the TSCA risk evaluation.

Exposure	• Worker exposure to and relevant occupational environmental releases of the chemical substance of interest
	  o Dermal and inhalation exposure routes (as indicated in the conceptual model)
	  o Any relevant media/pathway [list included: water, land, air, incineration, and other(s)] as indicated in the conceptual model
	
	Please refer to the conceptual models for more information about the routes and media/pathways included in the TSCA risk evaluation.

Setting or Scenario	• Any occupational setting or scenario resulting in worker exposure and relevant environmental releases (includes all manufacturing, processing, use, disposal indicated in Table A-3 below except (state none excluded or list excluded uses)
Outcomes	• Quantitative estimates* of worker exposures and of relevant environmental releases from occupational settings • General information and data related and relevant to the occupational estimates*

* Metrics (e.g., mg/kg/day or mg/m^3 for worker exposures, kg/site/day for releases) are determined by toxicologists for worker exposures and by exposure assessors for releases; also, the Engineering Data Needs (Table_Apx F-2) provides a list of related and relevant general information.
TSCA=Toxic Substances Control Act

Table_Apx F-2. Engineering, Environmental Release and Occupational Data Necessary to Develop the Environmental Release and Occupational Exposure Assessments	
Objective Determined during Scoping	**Type of Data**
General Engineering Assessment (may apply for either or both Occupational Exposures and / or Environmental Releases)	1. Description of the life cycle of the chemical(s) of interest, from manufacture to end-of-life (e.g., each manufacturing, processing, or use step), and material flow between the industrial and commercial life cycle stages. {Tags: Life cycle description, Life cycle diagram}[a] 2. The total annual U.S. volume (lb/yr or kg/yr) of the chemical(s) of interest manufactured, imported, processed, and used; and the share of total annual manufacturing and import volume that is processed or used in each life cycle step. {Tags: Production volume, Import volume, Use volume, Percent PV}[a] 3. Description of processes, equipment, unit operations, and material flows and frequencies (lb/site-day or kg/site-day and days/yr; lb/site-batch and batches/yr) of the chemical(s) of interest during each industrial/ commercial life cycle step. Note: if available, include weight fractions of the chemicals (s) of interest and material flows of all associated primary chemicals (especially water). {Tags: Process description, Process material flow rate, Annual operating days, Annual batches, Weight fractions (for each of above, manufacture, import, processing, use)}[a] 4. Basic chemical properties relevant for assessing exposures and releases, e.g., molecular weight, normal boiling point, melting point, physical forms, and room temperature vapor pressure. {Tags: Molecular weight, Boiling point, Melting point, Physical form, Vapor pressure, Water solubility}[a] 5. Number of sites that manufacture, process, or use the chemical(s) of interest for each industrial/ commercial life cycle step and site locations. {Tags: Numbers of sites (manufacture, import, processing, use), Site locations}[a]
Occupational Exposures	6. Description of worker activities with exposure potential during the manufacture, processing, or use of the chemical(s) of interest in each industrial/commercial life cycle stage. {Tags: Worker activities (manufacture, import, processing, use)}[a] 7. Potential routes of exposure (e.g., inhalation, dermal). {Tags: Routes of exposure (manufacture, import, processing, use)}[a] 8. Physical form of the chemical(s) of interest for each exposure route (e.g., liquid, vapor, mist) and activity. {Tags: Physical form during worker activities (manufacture, import, processing, use)}[a] 9. Breathing zone (personal sample) measurements of occupational exposures to the chemical(s) of interest, measured as time-weighted averages (TWAs), short-term exposures, or peak exposures in each occupational life cycle stage (or in a workplace scenario similar to an occupational life cycle stage). {Tags: PBZ measurements (manufacture, import, processing, use)}[a] 10. Area or stationary measurements of airborne concentrations of the chemical(s) of interest in each occupational setting and life cycle stage (or in a workplace scenario similar to the life cycle stage of interest). {Tags: Area measurements (manufacture, import, processing, use)}[a] 11. For solids, bulk and dust particle size characterization data. {Tags: PSD measurements (manufacture, import, processing, use)}[a] 12. Dermal exposure data. {Tags: Dermal measurements (manufacture, import, processing, use)} 13. Data needs associated with mathematical modeling (will be determined on a case-by-case basis). {Tags: Worker exposure modeling data needs (manufacture, import, processing, use)}[a] 14. Exposure duration (hr/day). {Tags: Worker exposure durations (manufacture, import, processing, use)}[a] 15. Exposure frequency (days/yr). {Tags: Worker exposure frequencies (manufacture, import, processing, use)}[a] 16. Number of workers who potentially handle or have exposure to the chemical(s) of interest in each occupational life cycle stage. {Tags: Numbers of workers exposed (manufacture, import, processing, use)}[a] 17. Personal protective equipment (PPE) types employed by the industries within scope. {Tags: Worker PPE (manufacture, import, processing, use)}[a] 18. Engineering controls employed to reduce occupational exposures in each occupational life cycle stage (or in a workplace scenario similar to the life cycle stage of interest), and associated data or estimates of exposure reductions. {Tags: Engineering controls (manufacture, import, processing, use), Engineering control effectiveness data}[a]

ED_004056A_00072837-00205

Table_Apx F-2. Engineering, Environmental Release and Occupational Data Necessary to Develop the Environmental Release and Occupational Exposure Assessments	
Objective Determined during Scoping	**Type of Data**
Environmental Releases	19. Description of relevant sources of potential environmental releases, including cleaning of residues from process equipment and transport containers, involved during the manufacture, processing, or use of the chemical(s) of interest in each life cycle stage. {Tags: Release sources (manufacture, import, processing, use)} [a] 20. Estimated mass (lb or kg) of the chemical(s) of interest released from industrial and commercial sites to relevant environmental medium (water) and treatment and disposal methods (POTW), including releases per site and aggregated over all sites (annual release rates, daily release rates) {Tags: Release rates (manufacture, import, processing, use)} [a] 21. Relevant release or emission factors. {Tags: Emission factors (manufacture, import, processing, use)} [a] 22. Number of release days per year. {Tags: Release frequencies (manufacture, import, processing, use)} [a] 23. Data needs associated with mathematical modeling (will be determined on a case-by-case basis). {Tags: Release modeling data needs (manufacture, import, processing, use)} [a] 24. Waste treatment methods and pollution control devices employed by the industries within scope and associated data on release/emission reductions. {Tags: Treatment/ emission controls (manufacture, import, processing, use), Treatment/ emission controls removal/ effectiveness data} [a]

Notes:

[a] These are the tags included in the full text screening form. The screener makes a selection from these specific tags, which describe more specific types of data or information.

Abbreviations:

hr=Hour
kg=Kilogram(s)
lb=Pound(s)
yr=Year
PV=Production Volume
PBZ= Personal Breathing Zone
POTW=Publicly Owned Treatment Works
PPE=Personal Protective Equipment
PSD=Particle Size Distribution
TWA=Time-Weighted Average

F.3 Inclusion Criteria for Data Sources Reporting Exposure Data on Consumers and Ecological Receptors

EPA/OPPT developed PECO statements to guide the full text screening of exposure data/information for human (i.e., consumers potentially exposure or susceptible subpopulations) and ecological receptors. Subsequent versions of the PECO statements may be produced throughout the process of screening and evaluating data for the chemicals undergoing TSCA risk evaluation. Studies that comply with the inclusion criteria in the PECO statement are eligible for inclusion, considered for evaluation, and possibly included in the exposure assessment. On the other hand, data sources are excluded if they do not meet the criteria in the PECO statement. The TCE-specific PECO is provided in Table_Apx F-3.

Table_Apx F-3. Inclusion Criteria for the Data Sources Reporting Trichloroethylene Exposure Data on Consumers and Ecological Receptors	
PECO Element	**Evidence**
Population	**Human:** Consumers (i.e., receptors who use a product directly) and bystanders (i.e., receptors who are non-product users that are incidentally exposed to the product or article), including

ED_004056A_00072837-00206

	PESS such as infants, children, pregnant women, lactating women, women of child bearing age, and high-end consumers
	Ecological: Aquatic species, aquatic plants
Exposure	**Expected Primary Exposure Sources, Pathways, Routes:** *See Figures 2-3 and 2-4* • Sources: Consumer uses in the home producing releases of TCE to air and dermal contact; industrial and commercial activities producing releases to surface water • Pathways: Indoor air and dermal contact with TCE in consumer products; surface water • Routes of Exposure: Inhalation via indoor air (consumer and bystander populations) and dermal exposure via direct contact with consumer products containing TCE; surface water
Comparator (Scenario)	**Human:** Consumer and bystander exposure via use of TCE-containing consumer products in the home
	Ecological: Aquatic species and plants exposed via releases to or presence in surface water
Outcomes for Exposure Concentration or Dose	**Human:** Acute, subchronic, and/or chronic external dose estimates (mg/kg/day); acute, subchronic, and/or chronic air concentration estimates (µg/m^3, mg/m^3). Both external potential dose and internal dose based on biomonitoring and reverse dosimetry mg/kg/day will be considered.
	Ecological: A wide range of ecological receptors will be considered (range depending on available ecotoxicity data) using surface water concentration(s) (µg/l, mg/L)
Abbreviations: Kg=Kilogram(s) Mg=Milligram(s) M^3=Cubic meter L=Liter(s)	

F.4 Inclusion Criteria for Data Sources Reporting Human Health Hazards

EPA/OPPT developed a TCE-specific PECO statement to guide the full text screening of the human health hazard literature. Subsequent versions of the PECOs may be produced throughout the process of screening and evaluating data for the chemicals undergoing TSCA risk evaluation. Studies that comply with the criteria specified in the PECO statement will be eligible for inclusion, considered for evaluation, and possibly included in the human health hazard assessment, while those that do not meet these criteria will be excluded according to the exclusion criteria.

In general, the PECO statements were based on (1) information accompanying the TSCA Scope document, and (2) preliminary review of the health effects literature from authoritative sources cited in the TSCA Scope documents. When applicable, these authoritative sources (e.g., IRIS assessments, EPA/OPPT's Work Plan Problem Formulations or risk assessments) will serve as starting points to identify PECO-relevant studies.

ED_004056A_00072837-00207

Table_Apx F-4. Inclusion and Exclusion Criteria for the Data Sources Reporting Human Health Hazards Related to TCE Exposure[a]			
PECO Element	**Evidence Stream**	**Papers/Features Included**	**Papers/Features Excluded**

Population	*Human*	• Any population
		• All lifestages
		• Study designs:
		  ○ Controlled exposure, cohort, case-control, cross-sectional, case-crossover for all endpoints
		  ○ Case studies, case series and ecological studies only related to deaths and respiratory distress
			• Case studies, case series and ecological studies for all endpoints ***other than*** death and respiratory distress

	Animal	• All non-human whole-organism mammalian species • All lifestages	• Non-mammalian species
	Mechanistic/ Alternative Methods	• Human or animal cells (including nonmammalian model systems), tissues, or biochemical reactions (e.g., ligand binding assays) with *in vitro* exposure regimens; bioinformatics pathways of disease analysis; or high throughput screening data.	
Exposure	*Human*	• Exposure based on administered dose or concentration of TCE, biomonitoring data (e.g., urine, blood or other specimens), environmental or occupational-setting monitoring data (e.g., air, water levels), job title or residence • Primary metabolites of interest (e.g., trichloroacetic acid) as identified in biomonitoring studies • Exposure identified as ***or presumed to be*** from oral, dermal, inhalation routes • Any number of exposure groups • Quantitative, semi-quantitative or qualitative estimates of exposure • Exposures to multiple chemicals/mixtures only if TCE or related metabolites were independently measured and analyzed	• Route of exposure ***not*** by inhalation, oral or dermal type (e.g., intraperitoneal, injection) • Multiple chemical/mixture exposures with no independent measurement of or exposure to TCE (or related metabolite)
	Animal	• A minimum of 2 quantitative dose or concentration levels of TCE plus a negative control group [a] • Acute, subchronic, chronic exposure from oral, dermal, inhalation routes • Exposure to TCE only (no chemical mixtures) • Quantitative and/or qualitative relative/rank-order estimates of exposure	• Only 1 quantitative dose or concentration level in addition to the control [a] • Route of exposure ***not*** by inhalation, oral or dermal type (e.g., intraperitoneal, injection) • No duration of exposure stated • Exposure to TCE in a chemical mixture
	Mechanistic/ Alternative Methods	• A minimum of 2 quantitative concentrations of TCE plus a negative control group [a] • Exposure to TCE only (no chemical mixtures)	• Only 1 quantitative dose or concentration level in addition to the control [a] • Exposure to TCE in a chemical mixture
Comparator	*Human*	• A comparison population [not exposed,	• No comparison population for

Table_Apx F-4. Inclusion and Exclusion Criteria for the Data Sources Reporting Human Health Hazards Related to TCE Exposure[a]			
		exposed to lower levels, exposed below detection] for endpoints ***other than*** death or respiratory distress • Any or no comparison for exposures associated with death or respiratory distress	endpoints other than death or respiratory distress from acute exposure
	Animal	• Negative controls that are vehicle-only treatment and/or no treatment	• Negative controls ***other than*** vehicle-only treatment or no treatment
	Mechanistic/ Alternative Methods	• Negative controls that are vehicle-only treatment and/or no treatment	• Negative controls ***other than*** vehicle-only treatment or no treatment
Outcome	*Human* *Animal*	• Endpoints described in the methylene chloride scope document [b]: o Acute toxicity o Liver toxicity o Kidney toxicity o Reproductive/developmental Toxicity o Neurotoxicity o Immunotoxicity o Sensitization o Cancer • Other endpoints [c]	
	Mechanistic/ Alternative Methods	• All data that may inform mechanisms of developmental toxicity	• Data that inform mechanisms of toxicity for endpoints ***other than*** developmental toxicity
General Considerations		**Papers/Features Included**	**Papers/Features Excluded**
		• Written in English [d] • Reports primary data or meta-analysis [a] • Full-text available • Reports both TCE exposure ***and*** a health outcome or mechanism of action	• Not written in English [d] • Reports secondary data (e.g., review papers) [a] • No full-text available (e.g., only a study description/abstract, out-of-print text) • Reports a TCE-related exposure ***or*** a health outcome/mechanism of action, but not both (e.g. incidence, prevalence report)

[a] Some of the studies that are excluded based on the PECO statement may be considered later during the systematic review process. For TCE, EPA will evaluate studies related to susceptibility and may evaluate, toxicokinetics and physiologically based pharmacokinetic models after other data (e.g., human and animal data identifying adverse health outcomes) are reviewed. EPA may also review other data as needed (e.g., animal studies using one concentration, review papers).
[b] EPA will review key and supporting studies in the IRIS assessment that were considered in the dose-response assessment for non-cancer and cancer endpoints as well as studies published after the IRIS assessment.
[c] EPA may screen for hazards other than those listed in the scope document if they were identified in the updated literature search that accompanied the scope document.
[d] EPA may translate studies as needed.

Appendix G List of Retracted Papers

The following reference was retracted by the journal:

HERO ID: 647007
Zhao, B; Zhu, L. (2006). Solubilization of DNAPLs by mixed surfactant: synergism and solubilization capacity. J Hazard Mater 136: 513-519. http://dx.doi.org/10.1016/j.jhazmat.2005.08.03

ED_004056A_00072837-00209