WPXENERGY

December 20, 2017

Mr. Ted Schooley
Air Permits Program Manager
Air Quality Bureau
New Mexico Environment Department
525 Camino De los Marquez, Suite 1
Santa Fe, New Mexico 87505

Re: Air Quality Notice of Intent (NOI) Application for the W. Escavada UT #307/308/309 Well Site

Dear Mr. Schooley,

This letter and accompanying material is an air quality Notice of Intent (NOI) application for the W. Escavada UT #307/308/309 well site. The well site is owned and operated by WPX Energy Production, LLC. The following excerpt from Section 3 summarizes equipment included in this application. Additionally, the site-specific process vs. control determination for the VRU is provided as an attachment to this letter.

Excerpt from Section 3:

> The facility will consist of one of the compressor engine options listed in Table 3-1. The engine option set with the worst case emissions is included in the total facility emissions.
>
> The facility will also consist of: two vapor recovery tanks, fifteen oil tanks, two produced water tanks, four separator heaters, one fuel gas separator heater, either nine smaller generators or three larger generators, two emergency flares, one reciprocating compressor, and up to three electric vapor recovery units (VRU's) for product recovery. The three VRUs will be capable of working in parallel so in the event one of the VRUs goes down or is not operational, the vapors will be directed to the other VRUs for product recovery. Additionally, please reference the cover letter to this application for the site-specific process vs. control determination for the VRU and the Texas Commission on Environmental Quality (TCEQ) guidance document for the basis of the VRU capture efficiency.
>
> Two emergency flares are included in the application because the volume of gas needing to be combusted during an emergency event is unknown. Depending on the age of the well(s), the number of wells on the pad, and the capacity the flare(s), more than one combustion device may be necessary. Examples of emergency events include: when the gathering company has a pipeline issue, such as if a compressor station suddenly goes down, and if the gas suddenly does not meet the pipeline quality specifications and is rejected by the gathering company. In the latter case, it is possible that the gas will have a sudden nitrogen increase due to a nearby frac and will not be accepted by the gathering company until the nitrogen decreases.
>
> These events are not malfunctions as defined in 20.2.7.7.E NMAC but rather emergencies per 20.2.7.113 NMAC. It is not possible to estimate the number of occurrences of such emergencies as they are "sudden and reasonably unforeseeable events beyond the control

of the permittee" by nature. However, if notified by a gas gathering company that a planned pipeline maintenance event was to occur, the operational protocol for the subject facility includes shutting the well(s) in for the duration of the planned maintenance event.

WPX requests that AQB please email an electronic copy of the NOI once it is issued in addition to sending the original hard copy via certified mail. If you have any questions regarding this application, please contact me at (539) 573-0307 or nica.hoshijo@wpxenergy.com .

Sincerely,

Nica Hoshijo, P.E.

Staff Environmental Specialist
WPX Energy, Inc.
1001 17th Street, Suite 1200
Denver, CO 80202
Office: (539) 573-0307
Cell: (303) 378-5750
nica.hoshijo@wpxenergy.com

Attachment:

1. Site-specific process vs. control determination for the VRU

Attachment 1: Site-specific process vs. control determination for the VRU

The site-specific process vs. control determination for the VRU, per CDPHE PS Memo 99-3 and EPA 1999 Process Equipment Guidance is provided below:

Please provide a Process vs. Control determination for the VRU, which addresses the three criteria in the attached memo [CDPHE PS Memo 99-3 and EPA 1999 Process Equipment Guidance].

1. *Is the primary purpose of the equipment to control air pollution?*

   No, the primary purpose of the VRU equipment is to recover product. The VRU recovers tank vapors and routes them into an available gas sales line.

2. *Where the equipment is recovering product, how do the cost savings from the product recovery compare to the cost of the equipment?*

   The cost benefit analysis of the VRU equipment compared to the product recovered is shown below:

Capital cost of VRU[1]:	$148,500	Total hydrocarbons sent to VRU (ton/yr)[2]:	1,873.12
Monthly cost of VRU[1]:	$4,350	Richness of tank vapors (BTU/scf)[3]:	2,294.43
		Price per MMBtu[4]:	$3.25
Year 1 Cost[1]:	**$200,700**	**Year 1 Cost Savings[1,5]:**	**$264,422**
Year 2+ Cost[1]:	**$52,200**	**Year 2+ Cost Savings[1,5]:**	**$264,422**

1 – All estimates shown in 2017 dollars unless specified otherwise.
2 – Total hydrocarbon (THC) estimates of tank vapors per E&P Tanks v3.0, including 99.2% VRU recovery efficiency. Estimates reflect a throughput of 3,800 bbls oil per day.
3 – Per E&P Tanks v3.0.
4 – EIA *Natural Gas Weekly Update* for the week of 1/25/2017.
5 - Calculation includes standard natural gas density of 379 scf/lb-mol, flash gas molecular weight of 40.04 lb/lb-mol per E&P Tanks v3.0, and the conversion 2,000 lbs/ton.

As detailed above, the average annual estimated cost savings from recovered product is higher than the average annual estimated cost of the VRU equipment. Capital costs are attributed to the first year of operations, and the first year return on investment (ROI) is approximately 32%. The second year of operations (and beyond) presents a potential ROI of 407%. Please note that cost estimates are not adjusted for inflation and do not account for volatility in gas prices. Additionally, there is a potentially much higher return if additional wells are serviced by this site in the future.

3. *Would the equipment be installed if no air quality regulations are in place?*

   Yes, the VRU equipment would still be installed if no air quality regulations were in place due to the significant cost benefits of product recovery.

The basis for the VRU product recovery efficiency, per the Texas Commission on Environmental Quality (TCEQ) document *Vapor Recovery Unit Capture/Control Guidance* (Feb. 2012) is provided below:

> Please note that the capture efficiency for the VRU is assumed to be 100% per the TCEQ guidance document *Vapor Recovery Unit Capture/Control Guidance*, dated Feb. 2012. The criteria for the capture efficiency determination are listed below. The 100% capture efficiency along with the 95% operational uptime assumption per NSPS OOOO §60.5411(c)(2) results in an overall VRU recovery efficiency of 95%.
>
> ***Requirements for Claiming Up to and Including 95% Control Efficiency:***
> *In order for an applicant to claim 95% capture efficiency for an mVRU [Mechanical Vapor Recovery Unit] the applicant must satisfy the basic design requirements by providing detailed explanation and supplemental information as needed if the following questions are answered in the affirmative.*
>
> 1. *Is the mVRU designed to capture vapor?*
>
> Yes, the VRU is designed to capture tank vapors.
>
> 2. *Is there sensing equipment which enables the applicant to know that the mVRU is capturing vapor(s) at peak intervals? An example is a pressure sensor, which senses the pressure of the vapors in the tank and communicates to the mVRU compressor to turn on, meaning to start drawing suction on the tank.*
>
> Yes, the rotary screw compressor within the VRU operates with a variable speed drive which allows the unit to automatically adjust to changes in flow rates, including increases during peak intervals.
>
> ***Requirements for Claiming Over 95% Control Efficiency up to and Including 100% Control Efficiency:***
>
> *In order for an applicant to claim 100% capture efficiency for an mVRU the applicant must satisfy additional design requirements and monitoring/recordkeeping requirements such as those that are listed below by providing detailed explanation and supplemental information as needed if the following questions are answered in the affirmative. Starting at 95%, assuming the basic design requirements listed above are satisfied, one additional percentage can be claimed for each additional design requirement, up to 99% control efficiency. In order for 100% control efficiency to be claimed, monitoring/recordkeeping must be done.*
>
> *It should be noted that the design requirements listed below are the general elements that allow an mVRU to function most efficiently. It is possible that certain mVRUs function differently, meaning that there are different design requirements that allow the unit to function efficiently or the design of a unit is such that the need for a certain design requirement is eliminated. Therefore, an efficiency percentage can be claimed if it is explained*

why a certain design requirement is not needed for the mVRU to maintain its claimed control efficiency.

1. *Is there any additional sensing equipment associated with the mVRU that enables greater efficiency or control? Additional sensing equipment could consist of more of the same sensor type to ensure redundancy or varying sensor types to provide more information about the mVRU system and the units under control. These sensors shall include, but are not limited to, pressure sensors, flow meters, motion sensors or alarms, and temperature sensors. All sensing devices associated with maintaining claimed control efficiency must be able to cause appropriate responsive action. For example, sensors could be set up throughout the process in order to communicate to the mVRU when there is a reason to re-direct streams or close off streams, such as in the case of a tank with a leak.*

   Yes, there is additional sensing equipment associated with the VRU that enables greater efficiency and control. There is a minimum pressure valve, high compressor oil temperature shutdown, low suction pressure shutdown, high discharge pressure shutdown, automatic blowdown device, and pressure relief valves.

2. *Is there an appropriately designed bypass system which operates automatically and re-directs streams as needed? By re-direct streams as needed, this means that discharge volume is routed back to the inlet of the mVRU until the appropriate pressure is built up for the compressor to turn on, eliminating the possibility of a vacuum. It also means that if the mVRU fails, the controlled stream(s) will be re-routed to another control device or to atmosphere as designed. Furthermore, if one out of multiple controlled units fails, the mVRU will still be able to capture the stream(s) from other controlled unit(s) because the failed unit stream will be re-directed appropriately, eliminating the possibility of a vacuum. If there is only one controlled stream, the mVRU should turn off if the controlled unit fails. The vacuum occurs when back-pressure is not maintained, meaning that the pressure is lower on the inlet side to the VRU and higher on the outlet side, which does not facilitate the movement of gas, and thereby creates a hazardous condition.*

   Yes, there is an appropriately designed bypass system which operates automatically and re-directs streams as needed. The unit is equipped with a low suction bypass that allows a controlled amount of gas from the higher pressure discharge side to re-circulate to the inlet scrubber vessel. This is to prevent a vacuum from being pulled on the tanks.

3. *Is there a system in place to ensure that no oxygen is allowed to be pulled into the system, such as a gas blanketing system?*

   Yes, there is a blanket gas system in place to ensure that no oxygen is allowed to be pulled into the unit.

4. *Is a sufficient compressor capable of recovering both wet and dry gas used in conjunction with the mVRU? Is the compressor capable of varying the operating speed of the compressor to respond to conditions of varying environmental and operational conditions?*

   Yes, a rotary screw compressor is used in the VRU. This type of compressor is well suited for both wet and dry gas. The compressor's 10 hp electric motor uses a variable speed drive to respond to varying environmental and operational conditions.

5. *Continuous monitoring/recordkeeping is required in order to demonstrate that the mVRU is maintaining its claimed control efficiency. Also, a vendor data sheet or some other supplemental information needs to be included in the permit application to show that the basic and additional design requirements are met. The following are some examples of monitoring/recordkeeping that could be done to show that the mVRU is maintaining its claimed control efficiency:*

    a. *If a pressure trigger is used to start a compressor to direct gases to the product line, a continuous pressure recording showing the pressure in the tank that would cause the gas to escape to the atmosphere through a pressure relief valve or hatch was never exceeded.*

    b. *If a tank is hard piped to the product line through a compressor and the only atmospheric relief is through a pressure relief valve on the tank, a continuous monitor recording on the valve position indicating that it never opened.*

    c. *The date and time that all tank hatches and relief valves are noted to be sealed and that they were resealed after each intentional opening.*

    d. *The date and time that that a periodic check was conducted of the controlled vessel and control device noting no holes, worn seals, or other defects are present that would allow an uncontrolled release to the atmosphere.*

    Monthly preventative maintenance checks are conducted to inspect the closed vent system on the tanks as well as proper operation of the VRU. In addition to these manual checks, the VRU uptime is continuously monitored by an internal system. All inspections and continuous monitoring data is recorded.

Based on the TCEQ guidance for determining VRU capture efficiency, WPX meets the basic design requirements as listed, the four additional design requirements, and the monitoring/recordkeeping requirements. As such, WPX assumes the VRU operates with 100% capture efficiency as shown in the table below. Excerpts from the VRU service and maintenance manual are provided in Section 7 of this application for further detail.

Criteria	Applicable	Capture Efficiency
1. Basic design requirements	X	95%
2. Four additional design requirements	X	4%
3. Monitoring & Recordkeeping	X	1%
Total Capture Efficiency		**100%**

LISA A. DECKER
Senior Counsel
(539) 573-0303
lisa.decker@wpxenergy.com

December 20, 2017

Ted Schooley
New Mexico Environment Department
Air Quality Bureau
525 Camino de los Marquez, Suite 1
Santa Fe, New Mexico, 87505-1816

Via Email: R9AirPermits@epa.gov
U.S. EPA Region 9
Tribal Program Office
75 Hawthorne Street
San Francisco, CA 94105

Via Email: rios.gerardo@epa.gov
Gerardo Rios
U.S. EPA Region 9
Air Permits Office (AIR-3)
75 Hawthorne Street
San Francisco, CA 94105

Re: Air Quality Notice of Intent (NOI) Application for the W. Escavada UT #307/308/309 Oil Production Facility

Dear Mr. Schooley and Mr. Rios:

Enclosed with this letter is the Air Quality Notice of Intent (NOI) application for the W. Escavada UT #307/308/309 oil production facility that WPX Energy Production, LLC (WPX) is simultaneously submitting to the New Mexico Environment Department (NMED), Air Quality Bureau.

Based on the physical location of this site on non-tribal State, fee or BLM lands located outside of the Navajo Reservation boundaries, NMED has air permit jurisdiction over this facility. As reference, for the W. Escavada UT #307/308/309 application, the map with the location is located in Section 7 of the application attachments.

I am simultaneously sending this letter to the United States Environmental Protection Agency, Region 9, for the purposes of informing EPA of our jurisdictional determination. WPX Energy will assume that it has filed the air quality NOI with the appropriate jurisdiction (NMED) unless we hear otherwise from EPA in writing no later than January 3, 2018.

Very truly yours,

Lisa A. Decker

Lisa A. Decker

cc: Nica Hoshijo, WPX Energy

THIS MULTI-TONE AREA OF THE DOCUMENT CHANGES COLOR GRADUALLY AND EVENLY FROM DARK TO LIGHT.

Tract See below 8300

Accounting Code 3050 8250

RU W.1 PG W.1

WPXENERGY

Ship To: 22877

WPX ENERGY, INC.
PO BOX 21218
TULSA, OK 74121-1218

No. 00011751

12/7 2017

PAY TO THE ORDER OF NMED $ 510.00

DOLLARS Five Hundred & no DOLLARS

FOR

W. Escavada UT # 307/308/309

Social Security or Tax ID Number	Mailing Address	City, State, Zip Code
	525 Camino de los Marquez	SF NM 87505

WPX JPMorgan Chase Bank, N.A.
Chicago, Illinois
70-2322 / 719

AUTHORIZED SIGNATURE

⑈0000011751⑈ ⑆071923226⑆ 0914788⑈

THE ORIGINAL DOCUMENT HAS A REFLECTIVE WATERMARK ON THE BACK. HOLD AT AN ANGLE TO VIEW WHEN CHECKING THE ENDORSEMENT.

Mail Application To:		For Department use only:
New Mexico Environment Department Air Quality Bureau Permits Section 525 Camino de los Marquez, Suite 1 Santa Fe, New Mexico, 87505 Phone: (505) 476-4300 Fax: (505) 476-4375 www.env.nm.gov/aqb		AIRS No.:

NOI Application for Oil and Gas Production Facilities

Use this application only for oil and gas production facilities registering under 20.2.73 NMAC

Submit the entire application (Parts 1, 2, and 3) on a single CD (no copies of the CD are needed). Hard copies of Part 1, Tables 2A, 2D, 2E & 2F of Part 2, and Sections 3 and 9 of Part 3 are required.

This application is being submitted as (check all that apply)**:**

☐ **Updating** an application currently under NMED review. Include this page and all pages that are being updated (no fee required).

Construction Status: ☑ Not Constructed ☐ Existing Permitted (or NOI) Facility ☐ Existing Non-permitted (or NOI) Facility

☒ **Acknowledgement that facilities with the following equipment or equipment options may not use this application form and should use the regular NOI form:** glycol dehydrators, non-NMED deration method, and applications with multiple equipment options.

☒ **Acknowledgement that this application contains the required Equipment Forms which are required to be used to determine emissions from equipment:** https://www.env.nm.gov/aqb/permit/Permit_Apps/AirQualityPermitNOIApplication.html

☐ **This facility qualifies to receive assistance from the Small Business Environmental Assistance Program (SBEAP).** To see if you qualify for SBEAP assistance go to https://www.env.nm.gov/aqb/sbap/small_business_criteria.html

Acknowledgements: ☑ I acknowledge that a pre-application meeting is available to me upon request

☑ $500 NSR Permit Filing Fee enclosed ☑ Check No.: 11751 in the amount of $500

Section 1 – Facility Information

Section 1-A: Company Information		AI No. (if known): TBD	Updating Permit/NOI/NPR No.: TBD
1	Facility Name: W. Escavada UT #307/308/309	Plant primary SIC Code (4 digits): 1311	
a	Facility Street Address (If no facility street address, provide directions from a prominent landmark): From the intersection of US Hwy 550 & US Hwy 64 in Bloomfield, NM, travel Southerly on US Hwy 550 for 53.6 miles to Mile Marker 97.7; Go Right (Southerly) on Indian Service Route #474 for 4.9 miles to fork in roadway; Go Right (Westerly) exiting Indian Service Route #474 for 2.5 miles to fork in roadway; Go Right (Westerly) which is straight for 0.3 miles to fork in roadway; Go Right (Westerly) which is straight for 1.0 miles to four-way intersection; Go Straight (Westerly) for 1.2 miles to four-way intersection; Go Left (Southerly) for 1.7 miles to four-way intersection; Go Right (Westerly) for 1.9 miles to begin WPX N Escavada UT #317H proposed access on left-hand side of existing roadway; Go Left (South-westerly) which is straight following along WPX N Escavada Unit #317H & WPX W Escavada Unit #300H proposed access's for 2685.0' to fork in proposed roadway; Go Left (Southerly) which is straight following a long WPX W Escavada Unit #302H proposed access for 4226.1' to fork in proposed roadway; Go Right (Westerly) following along WPX W Escavada Unit #305H proposed access for 4624.7' to staked WPX W Escavada Unit #305H location; Go Straight (Westerly) proceeding through staked location to begin propsed access on west edge, from which continuing for an additional 3154.6' to staked WPX W Escavada Unit #307H.		
2	Plant Operator Company Name: WPX Energy Production, LLC	Phone/Fax: (505) 333-1800	
a	Plant Operator Address: 721 S. Main, P.O. Box 640, Aztec, NM 87410		
b	Plant Operator's New Mexico Corporate ID or Tax ID: 87-0480555		
3	Plant Owner(s) name(s): WPX Energy Production, LLC	Phone/Fax: (505) 333-1800	
a	Plant Owner(s) Mailing Address(s): 721 S. Main, P.O. Box 640, Aztec, NM 87410		

ED_004016Q_00002229-00010

4	Bill To (Company): WPX Energy Production, LLC	Phone/Fax: (539) 573-0306
a	Mailing Address: 1001 17th St., Suite 1200, Denver, CO 80202	E-mail: JoDell.Mizoue@wpxenergy.com
5	☑ Preparer: Nica Hoshijo, Staff Environmental Specialist ☐ Consultant:	Phone/Fax: (539) 573-0307
a	Mailing Address: 1001 17th St., Suite 1200, Denver, CO 80202	E-mail: nica.hoshijo@wpxenergy.com
6	Plant Operator Contact: Robert Jordan	Phone/Fax: (505) 333-1850
a	Address: 721 S. Main, P.O. Box 640, Aztec, NM 87410	E-mail: Robert.jordan@wpxenergy.com
7	Air Permit Contact: Nica Hoshijo	Title: Staff Environmental Specialist
a	E-mail: nica.hoshijo@wpxenergy.com	Phone/Fax: (539) 573-0307
b	Mailing Address: 1001 17th St., Suite 1200, Denver, CO 80202	

Section 1-B: Current Facility Status

1.a	Has this facility already been constructed? ☐ Yes ☑ No	1.b If yes to question 1.a, is it currently operating in New Mexico? ☐ Yes ☐ No
2	If yes to question 1.a, was the existing facility subject to a Notice of Intent (NOI) (20.2.73 NMAC) before submittal of this application? ☐ Yes ☐ No	If yes to question 1.a, was the existing facility subject to a construction permit (20.2.72 NMAC) before submittal of this application? ☐ Yes ☐ No
3	Is the facility currently shut down? ☐ Yes ☑ No	If yes, give month and year of shut down (MM/YY):
4	Was this facility constructed before 8/31/1972 and continuously operated since 1972? ☐ Yes ☑ No	
5	If Yes to question 3, has this facility been modified (see 20.2.72.7.P NMAC) or the capacity increased since 8/31/1972? ☐Yes ☐No ☑N/A	
6	Is this facility a single source as defined in 20.2.73 NMAC? ☑ Yes ☐No	
7	Is this facility a Title V or a PSD Major Source? ☐Yes ☑ No	

Section 1-C: Facility Capacity & Production Rate

1	What is the facility's maximum capacity of oil and gas? Specify units and identify oil and gas separately.			
a	Current	Oil Hourly: Gas Hourly:	Oil Daily: Gas Daily:	Oil Annually: Gas Annually:
b	Proposed	Oil Hourly: 158.3 bbl/hr Gas Hourly: 166.7 Mscf/hr	Oil Daily: 3,800 bbl/day Gas Daily: 4,000 Mscf/day	Oil Annually: 1,387,000 bbl/yr Gas Annually: 1,460,000 Mscf/yr
2	What is the facility's maximum production rate of oil and gas? Specify units and identify oil and gas separately.			
a	Current	Oil Hourly: Gas Hourly:	Oil Daily: Gas Daily:	Oil Annually: Gas Annually:
b	Proposed	Oil Hourly: 158.3 bbl/hr Gas Hourly: 166.7 Mscf/hr	Oil Daily: 3,800 bbl/day Gas Daily: 4,000 Mscf/day	Oil Annually: 1,387,000 bbl/yr Gas Annually: 1,460,000 Mscf/yr

Section 1-D: Facility Location Information

1	Section: 19	Range: 7W	Township: 22N	County: Sandoval	Elevation (ft): 6,826
2	UTM Zone: ☐ 12 or ☑ 13			Datum: ☐ NAD 27 ☑ NAD 83 ☐ WGS 84	
a	UTM E (in meters, to nearest 10 meters): 264490			UTM N (in meters, to nearest 10 meters): 4001690	

b	**AND** Latitude (deg., min., sec.): 36° 7' 52.94" N	Longitude (deg., min., sec.): 107° 37' 1.77" W
3	Name and zip code of nearest New Mexico town: Counselor, NM 87018	
4	Detailed Driving Instructions from nearest NM town (attach a road map if necessary): From the intersection of US Hwy 550 & US Hwy 64 in Bloomfield, NM, travel Southerly on US Hwy 550 for 53.6 miles to Mile Marker 97.7; Go Right (Southerly) on Indian Service Route #474 for 4.9 miles to fork in roadway; Go Right (Westerly) exiting Indian Service Route #474 for 2.5 miles to fork in roadway; Go Right (Westerly) which is straight for 0.3 miles to fork in roadway; Go Right (Westerly) which is straight for 1.0 miles to four-way intersection; Go Straight (Westerly) for 1.2 miles to four-way intersection; Go Left (Southerly) for 1.7 miles to four-way intersection; Go Right (Westerly) for 1.9 miles to begin WPX N Escavada UT #317H proposed access on left-hand side of existing roadway; Go Left (South-westerly) which is straight following along WPX N Escavada Unit #317H & WPX W Escavada Unit #300H proposed access's for 2685.0' to fork in proposed roadway; Go Left (Southerly) which is straight following a long WPX W Escavada Unit #302H proposed access for 4226.1' to fork in proposed roadway; Go Right (Westerly) following along WPX W Escavada Unit #305H proposed access for 4624.7' to staked WPX W Escavada Unit #305H location; Go Straight (Westerly) proceeding through staked location to begin propsed access on west edge, from which continuing for an additional 3154.6'to staked WPX W Escavada Unit #307H.	
5	The facility is 10.3 (distance) miles SW (direction) of Counselor (nearest town).	
6	Status of land at facility (check one): ☐ Private ☐ Indian/Pueblo ☑ Federal BLM ☐ Federal Forest Service ☐ Other	
7	Will this facility operate in conjunction with other air regulated parties on the same property? ☒ No ☐ Yes If yes, what is the name and permit number (if known) of the other facility?	

Section 1-E: Proposed Operating Schedule

1	Facility **maximum** operating ($\frac{hours}{day}$): 24	($\frac{days}{week}$): 7	($\frac{weeks}{year}$): 52	($\frac{hours}{year}$): 8760

Section 1-F: Other Facility Information

1	Are there any current Notice of Violations (NOV), compliance orders, or any other compliance or enforcement issues related to this facility? ☐ Yes ☑ No If yes, specify:		
a	If yes, NOV date or description of issue:		NOV Tracking No:
b	Is this application in response to any issue listed in 1-F, 1 or 1a above? ☐ Yes ☑ No If Yes, provide the 1c & 1d info below:		
c	Document Title:	Date:	Requirement # (or page # and paragraph #):

Section 1-I – Submittal Requirements

Each 20.2.73 NMAC (**NOI**) application package shall consist of the following:

Hard Copy Submittal Requirements:

1) Hard copies of Part 1, Tables 2A, 2D, 2E, and 2F of Part 2, and Section 3 of Part 3 and the signed Certification Page are required.
2) The entire NOI application should be submitted electronically on compact disk (CD).

Electronic Submittal Requirements [in addition to the required hard copy(ies)]:

1) A single PDF document of the entire application as submitted and the individual documents comprising the application.
2) The documents should also be submitted in Microsoft Office compatible file format (Word, Excel, etc.) allowing us to access the text in the documents (copy & paste). Any documents that cannot be submitted in a Microsoft Office compatible format shall be saved as a PDF file from within the electronic document that created the file. If you are unable to provide Microsoft office compatible electronic files or internally generated PDF files of files (items that were not created electronically: i.e. brochures, maps, graphics, etc,), submit these items in hard copy format with the number of additional hard copies. We must be able to review the formulas and inputs that calculated the emissions.
3) It is preferred that this application form be submitted as 3 electronic files (2 MSWord docs: Application section 1 and Application section 3-9) and 1 Excel file of the tables (Application section 2) on the CD. Please include as many of the 3-9 Sections as practical in a single MS Word electronic document. Create separate electronic file(s) if a single file becomes too large or if portions must be saved in a file format other than MS Word.

ED_004016Q_00002229-00012

4) The electronic file names shall be a maximum of 25 characters long (including spaces, if any). The format of the electronic Application shall be in the format: "A-3423-FacilityName". The "A" distinguishes the file as an application submittal, as opposed to other documents the Department itself puts into the database. Thus, all electronic application submittals should begin with "A-". Modifications to existing facilities should use the core NOI number (i.e. '3423') the Department assigned to the facility as the next 4 digits. Use 'XXXX' for new facility applications. The format of any separate electronic submittals (additional submittals such as non-Word attachments, re-submittals, application updates) and Section document shall be in the format: "A-3423-9-description", where "9" stands for the section # (in this case Section 9-Certification Page). Please refrain, as much as possible, from submitting any scanned documents as this file format is extremely large, which uses up too much storage capacity in our database. Please take the time to fill out the header information throughout all submittals as this will identify any loose pages, including the Application Date (date submitted) & Revision # (0 for original, 1, 2, etc.; which will help keep track of subsequent partial update(s) to the original submittal. The footer information should not be modified by the applicant.

ED_004016Q_00002229-00013

Table of Contents

Section 1: **Facility Information**
Section 2: **Tables**
Section 3: **Application Summary and Routine Operations**
Section 4: **Process Flow Sheet**
Section 5: **All Calculations, plus required Equipment Forms (Air Emissions Calculation Tool)**
Section 6: **Information Used to Determine Emissions**
Section 7: **Map(s)**
Section 8: **Applicable State & Federal Regulations**
Section 9: **Certification Page**

ED_004016Q_00002229-00014

Table 2-A: Regulated Emission Sources

Unit and stack numbering must correspond throughout the application package. Equipment exemptions under 2.72.202 NMAC do not apply to 20.2.73 NMAC. Identify process equipment that is used to reroute emissions back into the process or sales pipeline in Table 2-A, such as a VRU, VRT, ULPS, Flashing Vessel, or Blowcase.

Unit Number[1]	Source Description	Make	Model #	Serial #	Manufacturer's Rated Capacity[3] (Specify Units)	Requested Permitted Capacity[3] (Specify Units)	Date of Manufacture[2] / Date of Construction/ Reconstruction[2]	Controlled by Unit # / Emissions vented to Stack #	Source Classification Code (SCC)	For Each Piece of Equipment, Check One	RICE Ignition Type (CI, SI, 4SLB, 4SRB, 2SLB)[4]	Replacing Unit No.
ENG-1[5]	Compressor Engine, x1	Caterpillar	G3508B	TBD	690 hp	632 hp	After 7/1/2010 / TBD	N/A / ENG-1[5]	20200254	☑ New/Additional ☐ Existi ☐ Rep ☐ To Be	4SLB	N/A
VRT 1-2	Vapor Recovery Tank, Oil/PW, x2 (with VRU for product recovery)	TBD	TBD	TBD	750 bbl ea.	750 bbl ea.	TBD / TBD	N/A / VRT 1-2	40400312	☑ New/Additional ☐ Existi ☐ Rep ☐ To Be	N/A	N/A
TK 1-15	Storage Tanks, Post-Flash Oil, x15 (with VRU for product recovery)	TBD	TBD	TBD	500 bbl ea.	500 bbl ea.	TBD / TBD	N/A / TK 1-15	40400301 / 40400302	☑ New/Additional ☐ Existi ☐ Rep ☐ To Be	N/A	N/A
PWTK 1-2	Storage Tanks, Post-Flash Produced Water, x2	TBD	TBD	TBD	500 bbl ea.	500 bbl ea.	TBD / TBD	N/A / PWTK 1-2	40400301 / 40400302	☑ New/Additional ☐ Existi ☐ Rep ☐ To Be	N/A	N/A
HT 1-4	Natural Gas Fired, Separator Heaters, x4	Shurefire	TBD	TBD	1.25 MMbtu/hr	1.25 MMbtu/hr	TBD / TBD	N/A / HT 1-4	31000107	☑ New/Additional ☐ Existi ☐ Rep ☐ To Be	N/A	N/A
HT-5	Natural Gas Fired, Fuel Gas Separator Heater, x1	Shurefire	TBD	TBD	700 Mbtu/hr	700 Mbtu/hr	TBD / TBD	N/A / HT-5	31000107	☑ New/Additional ☐ Existi ☐ Rep ☐ To Be	N/A	N/A
GEN-1[5]	Generators, up to 9	Capstone	C-65	TBD	87 hp	87 hp	TBD / TBD	N/A / GEN-1[5]	20100201	☑ New/Additional ☐ Existi ☐ Rep ☐ To Be	N/A	N/A
OILLOAD-1	Truck Loading (Oil Loadout)	N/A	N/A	N/A	N/A	N/A	N/A / N/A	N/A / N/A	31000199	☑ New/Additional ☐ Existi ☐ Rep ☐ To Be	N/A	N/A
FUG-1	Equipment Leaks (Fugitives)	N/A	N/A	N/A	N/A	N/A	N/A / N/A	N/A / N/A	31000101	☑ New/Additional ☐ Existi ☐ Rep ☐ To Be	N/A	N/A
COMP-1[5]	Reciprocating Compressor(s), x1	TBD	TBD	N/A	N/A	N/A	TBD / TBD	N/A / N/A	31000203	☑ New/Additional ☐ Existi ☐ Rep ☐ To Be	N/A	N/A
FL 1-2	Flares, x2	TBD	TBD	TBD	TBD	TBD	TBD / TBD	N/A / FL 1-2	31000160	☑ New/Additional ☐ Existi ☐ Rep ☐ To Be	N/A	N/A
ROAD-1	Road Dust	N/A	N/A	N/A	N/A	N/A	N/A / N/A	N/A / N/A	31000199	☑ New/Additional ☐ Existi ☐ Rep ☐ To Be	N/A	N/A
VRU 1-3	Vapor Recovery Unit (VRU), x3	N/A	N/A	N/A	10-75 hp	10-75 hp	N/A / N/A	N/A / N/A	31000199	☑ New/Additional ☐ Existi ☐ Rep ☐ To Be	N/A	N/A

[1] Unit numbers must correspond to unit numbers in the previous NOI unless a complete cross reference table of all units in both NOIs is provided.
[2] Specify dates required to determine regulatory applicability.
[3] To properly account for power conversion efficiencies, generator set rated capacity shall be reported as the rated capacity of the engine in horsepower, not the kilowatt capacity of the generator set.
[4] "4SLB" means four stroke lean burn engine, "4SRB" means four stroke rich burn engine, "2SLB" means two stroke lean burn engine, "CI" means compression ignition, and "SI" means spark ignition
[5] These "composite" emissions represent the worse case emissions.

ED_004016Q_00002229-00015

Table 2-C: Emissions Control Equipment

Unit and stack numbering must correspond throughout the application package. The permittee shall report all control devices and list each pollutant controlled by the control device regardless if the applicant takes credit for the reduction in emissions. Flares, Enclosed Combustion Devices, Catalytic Converters and Air Fuel Ratio (AFR) Controllers shall be reported on Table 2-C. For each AFR, note whether the AFR are aftermarket or integral to the engine.

Control Equipment Unit No.	Control Equipment Description	Date Installed	Controlled Pollutant(s)	Controlling Emissions for Unit Number(s)[1]	Efficiency (% Control by Weight)	Method used to Estimate Efficiency
ENG-1	Oxidative Catalyst	TBD	CO	ENG-1	22% CO	Subpart JJJJ + Mfr. Data
FL 1-2	Flares	TBD	VOC	FL 1-2	95% VOC	Engineering Knowledge

[1] List each control device on a separate line. For each control device, list all emission units controlled by the control device.

ED_004016Q_00002229-00016

Table 2-D: Maximum Emissions (under normal operating conditions)

Maximum Emissions are the emissions at maximum capacity and prior to (in the absence of) pollution control, emission-reducing process equipment, or any other emission reduction. Calculate the hourly emissions using the worst case hourly emissions for each pollutant. For each pollutant, calculate the annual emissions as if the facility were operating at maximum plant capacity without pollution controls for 8760 hours per year. List Hazardous Air Pollutants (HAP) & Toxic Air Pollutants (TAPs) in Table 2-I. Unit & stack numbering must be consistent throughout the application package. Fill all cells in this table with the emission numbers or a "-" symbol. A "-" symbol indicates that emissions of this pollutant are not expected. Numbers shall be expressed to at least 2 decimal points (e.g. 0.41, 1.41, or 1.41E-4). List tank flashing emissions separately from tank working and breathing losses.

Unit No.	NOx		CO		VOC		SOx		TSP[2]		PM10[2]		PM2.5[2]		H_2S		Lead	
	lb/hr	ton/yr	lb/hr	ton/yr	lb/hr	ton/yr	lb/hr	ton/yr	lb/hr	ton/yr	lb/hr	ton/yr	lb/hr	ton/yr	lb/hr	ton/yr	lb/hr	ton/yr
ENG-1[2]	11.7	51.3	10.0	43.7	6.0	26.1	0.02	0.09	0.28	1.2	0.28	1.2	0.28	1.2	--	--	--	--
VRT 1-2	--	--	--	--	2.7	11.7	--	--	--	--	--	--	--	--	--	--	--	--
TK 1-10	--	--	--	--	0.35	1.5	--	--	--	--	--	--	--	--	--	--	--	--
TK 11-15	--	--	--	--	0.17	0.76	--	--	--	--	--	--	--	--	--	--	--	--
PWTK 1-2	--	--	--	--	0.00	0.00	--	--	--	--	--	--	--	--	--	--	--	--
HT 1-5	0.56	2.5	0.47	2.1	0.03	0.14	0.00	0.00	0.04	0.18	0.04	0.18	0.04	0.18	--	--	--	--
GEN-1[3]	0.28	1.2	0.73	3.2	0.06	0.26	--	--	--	--	--	--	--	--	--	--	--	--
OILLOAD -1	--	--	--	--	17.8	41.0	--	--	--	--	--	--	--	--	--	--	--	--
FUG-1	--	--	--	--	3.6	15.6	--	--	--	--	--	--	--	--	--	--	--	--
COMP-1[4]	--	--	--	--	0.32	1.4	--	--	--	--	--	--	--	--	--	--	--	--
FL-1	0.01	0.03	0.04	0.16	0.01	0.04	0.00	0.00	0.00	0.00	0.00	0.00	0.00	0.00	--	--	--	--
FL-2	0.01	0.03	0.04	0.16	0.01	0.04	0.00	0.00	0.00	0.00	0.00	0.00	0.00	0.00	--	--	--	--
ROAD-1	--	--	--	--	--	--	--	--	7.4	7.5	1.9	1.9	0.19	0.19	--	--	--	--
Totals	12.6	55.1	11.3	49.3	30.9	98.5	0.02	0.09	7.7	8.9	2.2	3.3	0.51	1.6	--	--	--	--

[1] **Condensable Particulate Matter:** Include condensable particulate matter emissions for PM10 and PM2.5 if the source is a combustion source. Do not include condensable particulate matter for TSP unless TSP is set equal to PM10 and PM2.5.

[2] - Composite emissions represent the worst case compressor engine emissions. (ENG 1-4)

[3] - Composite emissions represent the worst case generator emissions. (GEN 1-9 OR GEN 10-12)

[4] - Composite emissions represent the worst case compressor emissions. (COMP 1-4)

ENG-1, VRT 1-2, TK 11-15, GEN-1, and COMP-1 emissions are based on emission calculation spreadsheet. PM emissions of FL 1-2 are based on emission calculation spreadsheet.

ED_004016Q_00002229-00017

Table 2-E: Requested Allowable Emissions

Unit & stack numbering must be consistent throughout the application package. Fill all cells in this table with the emission numbers or a "-" symbol. A "-" symbol indicates that emissions of this pollutant are not expected. Numbers shall be expressed to at least 2 decimal points (e.g. 0.41, 1.41, or $1.41E^{-4}$). Note the Department has added a placeholder for SSM emissions on Table 2-E. Enter the total emissions from the "Totals line" in Table 2-F in the SSM row on Table 2-E. List tank flashing emissions separately from tank working and breathing losses.

Unit No.	NOx		CO		VOC		SOx		TSP[1]		PM10[1]		PM2.5[1]		H_2S		Lead	
	lb/hr	ton/yr	lb/hr	ton/yr	lb/hr	ton/yr	lb/hr	ton/yr	lb/hr	ton/yr	lb/hr	ton/yr	lb/hr	ton/yr	lb/hr	ton/yr	lb/hr	ton/yr
ENG-1[2]	2.0	8.7	3.9	17.1	0.97	4.3	0.02	0.09	0.28	1.2	0.28	1.2	0.28	1.2	--	--	--	--
VRT 1-2	--	--	--	--	2.7	11.7	--	--	--	--	--	--	--	--	--	--	--	--
TK 1-10	--	--	--	--	0.40	1.5	--	--	--	--	--	--	--	--	--	--	--	--
TK 11-15	--	--	--	--	0.17	0.76	--	--	--	--	--	--	--	--	--	--	--	--
PWTK 1-2	--	--	--	--	0.00	0.00	--	--	--	--	--	--	--	--	--	--	--	--
HT 1-5	0.6	2.5	0.47	2.1	0.03	0.14	0.00	0.00	0.04	0.18	0.04	0.18	0.04	0.18	--	--	--	--
GEN-1[3]	0.28	1.2	0.73	3.2	0.06	0.26	--	--	--	--	--	--	--	--	--	--	--	--
OILLOAD -1	--	--	--	--	17.8	41.0	--	--	--	--	--	--	--	--	--	--	--	--
FUG-1	--	--	--	--	3.6	15.6	--	--	--	--	--	--	--	--	--	--	--	--
COMP-1[4]	--	--	--	--	0.32	1.4	--	--	--	--	--	--	--	--	--	--	--	--
FL-1	0.01	0.03	0.04	0.16	0.01	0.04	0.00	0.00	0.00	0.00	0.00	0.00	0.00	0.00	--	--	--	--
FL-2	0.01	0.03	0.04	0.16	0.01	0.04	0.00	0.00	0.00	0.00	0.00	0.00	0.00	0.00	--	--	--	--
ROAD-1	--	--	--	--	--	--	--	--	7.4	7.5	1.9	1.9	0.19	0.19	--	--	--	--
Totals	2.8	12.4	5.2	22.7	25.9	76.7	0.02	0.09	7.7	8.9	2.2	3.3	0.51	1.6	--	--	--	--

[1] **Condensable Particulate Matter:** Include condensable particulate matter emissions for PM10 and PM2.5 if the source is a combustion source. Do not include condensable particulate matter for TSP unless TSP is set equal to PM10 and PM2.5.

[2] - Composite emissions represent the worst case compressor engine emissions. (ENG 1-4)
[3] - Composite emissions represent the worst case generator emissions. (GEN 1-9 OR GEN 10-12)
[4] - Composite emissions represent the worst case compressor emissions. (COMP 1-4)

ENG-1, VRT 1-2, TK 11-15, GEN-1, and COMP-1 emissions are based on emission calculation spreadsheet. PM emissions of FL 1-2 are based on emission calculation spreadsheet.

ED_004016Q_00002229-00018

Table 2-F: Additional Emissions during Startup, Shutdown, and Routine Maintenance (SSM)

☑ This table is intentionally left blank since all emissions at this facility due to routine or predictable startup, shutdown, or scehduled maintenance are no higher than those listed in Table 2-E and a malfunction emission limit is not already permitted or requested. If you are required to report GHG emissions as described in Section 6a, include any GHG emissions during Startup, Shutdown, and/or Scheduled Maintenance (SSM) in Table 2-P. Provide an explanations of SSM emissions in Section 6 and 6a.

All applications for facilities that have emissions during routine our predictable startup, shutdown or scheduled maintenance (SSM)[1], including NOI applications, must include in this table the Maximum Emissions during routine or predictable startup, shutdown and scheduled maintenance (20.2.7 NMAC, 20.2.72.203.A.3 NMAC, 20.2.73.200.D.2 NMAC). In Section 6 and 6a, provide emissions calculations for all SSM emissions reported in this table. Refer to "Guidance for Submittal of Startup, Shutdown, Maintenance Emissions in Permit Applications (https://www.env.nm.gov/aqb/permit/aqb_pol.html) for more detailed instructions. Numbers shall be expressed to at least 2 decimal points (e.g. 0.41, 1.41, or 1.41E-4).

Unit No.	NOx		CO		VOC		SOx		TSP[2]		PM10[2]		PM2.5[2]		H_2S		Lead	
	lb/hr	ton/yr	lb/hr	ton/yr	lb/hr	ton/yr	lb/hr	ton/yr	lb/hr	ton/yr	lb/hr	ton/yr	lb/hr	ton/yr	lb/hr	ton/yr	lb/hr	ton/yr
N/A																		
Totals																		

[1] **For instance**, if the short term steady-state Table 2-E emissions are 5 lb/hr and the SSM rate is 12 lb/hr, enter 7 lb/hr in this table. If the annual steady-state Table 2-E emissions are 21.9 TPY, and the number of scheduled SSM events result in annual emissions of 31.9 TPY, enter 10.0 TPY in the table below.

[1] **Condensable Particulate Matter:** Include condensable particulate matter emissions for PM10 and PM2.5 if the source is a combustion source. Do not include condensable particulate matter for TSP unless TSP is set equal to PM10 and PM2.5.

ED_004016Q_00002229-00019

Table 2-H: Stack Exit Conditions

Unit and stack numbering must correspond throughout the application package. Include the stack exit conditions for each unit that emits from a stack, including blowdown venting parameters and tank emissions.

Stack Number	Serving Unit Number(s) from Table 2-A	Orientation (H-Horizontal V=Vertical)	Rain Caps (Yes or No)	Height Above Ground (ft)	Temp. (F)	Flow Rate		Moisture by Volume (%)	Velocity (ft/sec)	Inside Diameter (ft)
						(acfs)	(dscfs)			
ENG-1	ENG-1	V	No	21	840	62.3	44.9	9.3	115.1	0.83
VRT 1-2	VRT 1-2	V	No	30	70	0.00	0.00	0.00	0.00	0.67
TK 1-15	TK 1-15	V	No	20	70	0.00	0.00	0.00	0.00	0.67
PWTK 1-2	PWTK 1-2	V	No	20	70	0.00	0.00	0.00	0.00	0.67
HT 1-4	HT 1-4	V	No	15	550	8.8	5.9	15.4	11.2	1.0
HT-5	HT-5	V	No	15	550	12.3	8.3	15.4	37.6	0.65
GEN 1-9	GEN 1-9	V	No	10	588	24.1	18.1	5.4	69.0	0.67
FL 1-2	FL 1-2	V	No	20	TBD	TBD	TBD	TBD	TBD	TBD

ED_004016Q_00002229-00020

Table 2-I: Stack Exit and Fugitive Emission Rates for HAPs and TAPs

In the table below, report the Potential to Emit for each HAP from each regulated emission unit listed in Table 2-A, only if the entire facility emits the HAP at a rate greater than or equal to one (1) ton per year For each such emission unit, HAPs shall be reported to the nearest 0.1 tpy. Each facility-wide Individual HAP total and the facility-wide Total HAPs shall be the sum of all HAP sources calculated to the nearest 0.1 ton per year. Per 20.2.72.403.A.1 NMAC, facilities not exempt [see 20.2.72.402.C NMAC] from TAP permitting shall report each TAP that has an uncontrolled emission rate in excess of its pounds per hour screening level specified in 20.2.72.502 NMAC. TAPs shall be reported using one more significant figure than the number of significant figures shown in the pound per hour threshold corresponding to the substance. Use the HAP nomenclature as it appears in Section 112 (b) of the 1990 CAAA and the TAP nomenclature as it listed in 20.2.72.502 NMAC. Include tank-flashing emissions estimates of HAPs in this table. For each HAP or TAP listed, fill all cells in this table with the emission numbers or a "-" symbol. A "-" symbol indicates that emissions of this pollutant are not expected or the pollutant is emitted in a quantity less than the threshold amounts described above.

Stack No.	Unit No.(s)	Total HAPs		Formaldehyde ☑ HAP or ☐ TAP		Provide Pollutant Name Here ☐ HAP or ☐TAP		Provide Pollutant Name Here ☐ HAP or ☐TAP		Provide Pollutant Name Here ☐ HAP or ☐TAP		Provide Pollutant Name Here ☐ HAP or ☐TAP		Provide Pollutant Name Here ☐ HAP or ☐TAP		Provide Pollutant Name Here ☐ HAP or ☐TAP		Provide Pollutant Name Here ☐ HAP or ☐TAP	
		lb/hr	ton/yr	lb/hr	ton/yr	lb/hr	ton/yr	lb/hr	ton/yr	lb/hr	ton/yr	lb/hr	ton/yr	lb/hr	ton/yr	lb/hr	ton/yr	lb/hr	ton/yr
ENG-1[1]	ENG-1[1]	0.87	3.8	0.39	1.71														
VRT 1-2	VRT 1-2	0.04	0.19																
TK 1-15	TK 1-15	0.01	0.06																
PWTK 1-2	PWTK 1-2	0.00	0.00																
HT 1-4	HT 1-4	0.01	0.04	0.00	0.00														
HT-5	HT-5	0.00	0.01	0.00	0.00														
GEN-1[2]	GEN-1[2]	0.52	2.3	0.04	0.19														
OILLOAD -1	OILLOAD -1	0.25	1.1																
FUG-1	FUG-1	0.24	1.1																
COMP-1[3]	COMP-1[3]	0.04	0.18																
FL 1-2	FL 1-2	--	--																
ROAD-1	ROAD-1	--	--																
Totals:		2.0	8.7	0.43	1.9														

[1] - Composite emissions represent the worst case compressor engine emissions. (ENG 1-4)

[2] - Composite emissions represent the worst case generator emissions. (GEN 1-9 OR GEN 10-12)

[3] - Composite emissions represent the worst case compressor emissions. (COMP 1-4)

Emissions are based on emission calculation spreadsheet.

ED_004016Q_00002229-00021

Table 2-J: Fuel

Specify fuel characteristics and usage. Unit and stack numbering must correspond throughout the application package.

Unit No.	Fuel Type (low sulfur Diesel, ultra low sulfur diesel, Natural Gas, Coal, ...)	Fuel Source: purchased commercial, pipeline quality natural gas, residue gas, raw/field natural gas, process gas (e.g. SRU tail gas) or other	Specify Units				
			Lower Heating Value	Hourly Usage	Annual Usage	% Sulfur	% Ash
ENG-1	Natural Gas (total)	Raw/Field Natural Gas	1020 Btu/scf	5,083	44,523,954	N/A	N/A
HT 1-4	Natural Gas (total)	Raw/Field Natural Gas	1020 Btu/scf	4,902	42,941,176	N/A	N/A
HT-5	Natural Gas (total)	Raw/Field Natural Gas	1020 Btu/scf	686	6,011,765	N/A	N/A
GEN 1-9	Natural Gas (total)	Raw/Field Natural Gas	1020 Btu/scf	7,429	65,081,647	N/A	N/A
FL 1-2	Natural Gas (total)	Raw/Field Natural Gas	1020 Btu/scf	196	1,717,647	N/A	N/A

ED_004016Q_00002229-00022

Table 2-K: Liquid Data for Tanks Listed in Table 2-L

For each tank, list the liquid(s) to be stored in each tank. If it is expected that a tank may store a variety of hydrocarbon liquids, enter "mixed hydrocarbons" in the Composition column for that tank and enter the corresponding data of the most volatile liquid to be stored in the tank. If tank is to be used for storage of different materials, list all the materials in the "All Calculations" attachment, run the newest version of TANKS on each, and use the material with the highest emission rate to determine maximum uncontrolled and requested allowable emissions rate. The permit will specify the most volatile category of liquids that may be stored in each tank. Include appropriate tank-flashing modeling input data. Use additional sheets if necessary. Unit and stack numbering must correspond throughout the application package.

Tank No.	SCC Code	Material Name	Composition	Liquid Density (lb/gal)	Vapor Molecular Weight (lb/lb*mol)	Average Storage Conditions		Max Storage Conditions	
						Temperature (°F)	True Vapor Pressure (psia)	Temperature (°F)	True Vapor Pressure (psia)
VRT-1	40400312	Oil	Water / Mixed Hydrocarbons	7.1	40.0	63.1	3.1	56.0	3.9
VRT-2	40400312	Oil	Water / Mixed Hydrocarbons	7.1	40.0	63.1	3.1	56.0	3.9
TK-1	40400301 / 40400302	Oil	Mixed Hydrocarbons	7.1	50.0	78.1	4.1	90.3	5.0
TK-2	40400301 / 40400302	Oil	Mixed Hydrocarbons	7.1	50.0	78.1	4.1	90.3	5.0
TK-3	40400301 / 40400302	Oil	Mixed Hydrocarbons	7.1	50.0	78.1	4.1	90.3	5.0
TK-4	40400301 / 40400302	Oil	Mixed Hydrocarbons	7.1	50.0	78.1	4.1	90.3	5.0
TK-5	40400301 / 40400302	Oil	Mixed Hydrocarbons	7.1	50.0	78.1	4.1	90.3	5.0
TK-6	40400301 / 40400302	Oil	Mixed Hydrocarbons	7.1	50.0	78.1	4.1	90.3	5.0
TK-7	40400301 / 40400302	Oil	Mixed Hydrocarbons	7.1	50.0	78.1	4.1	90.3	5.0
TK-8	40400301 / 40400302	Oil	Mixed Hydrocarbons	7.1	50.0	78.1	4.1	90.3	5.0
TK-9	40400301 / 40400302	Oil	Mixed Hydrocarbons	7.1	50.0	78.1	4.1	90.3	5.0
TK-10	40400301 / 40400302	Oil	Mixed Hydrocarbons	7.1	50.0	78.1	4.1	90.3	5.0
TK-11	40400301 / 40400302	Oil	Mixed Hydrocarbons	7.1	50.0	78.1	4.1	90.3	5.0
TK-12	40400301 / 40400302	Oil	Mixed Hydrocarbons	7.1	50.0	78.1	4.1	90.3	5.0
TK-13	40400301 / 40400302	Oil	Mixed Hydrocarbons	7.1	50.0	78.1	4.1	90.3	5.0
TK-14	40400301 / 40400302	Oil	Mixed Hydrocarbons	7.1	50.0	78.1	4.1	90.3	5.0
TK-15	40400301 / 40400302	Oil	Mixed Hydrocarbons	7.1	50.0	78.1	4.1	90.3	5.0
PWTK-1	40400301 / 40400302	Produced Water	Water / Mixed Hydrocarbons	8.3	19.2	78.1	0.49	90.3	0.72
PWTK-2	40400301 / 40400302	Produced Water	Water / Mixed Hydrocarbons	8.3	19.2	78.1	0.49	90.3	0.72

ED_004016Q_00002229-00023

Table 2-L: Tank Data

Include appropriate tank-flashing modeling input data. Use an addendum to this table for unlisted data categories. Unit and stack numbering must correspond throughout the application package. Use additional sheets if necessary. See reference Table 2-L2. Note: 1.00 bbl = 10.159 M3 = 42.0 gal

Tank No.	Date Installed	Materials Stored	Seal Type (refer to Table 2-LR below)	Roof Type (refer to Table 2-LR below)	Capacity		Diameter (M)	Vapor Space (M)	Color (from Table VI-C)		Paint Condition (from Table VI-C)	Annual Throughput (gal/yr)	Turn-overs (per year)
					(bbl)	(M^3)			Roof	Shell			
VRT-1	TBD	Oil	N/A	FX	750	119	4.1	1.5	OT (Green)	OT (Green)	Good	29,127,000	925
VRT-2	TBD	Oil	N/A	FX	750	119	4.1	1.5	OT (Green)	OT (Green)	Good	29,127,000	925
TK-1	TBD	Oil	N/A	FX	500	79	4.1	3.0	OT (Green)	OT (Green)	Good	3,883,600	185
TK-2	TBD	Oil	N/A	FX	500	79	4.1	3.0	OT (Green)	OT (Green)	Good	3,883,600	185
TK-3	TBD	Oil	N/A	FX	500	79	4.1	3.0	OT (Green)	OT (Green)	Good	3,883,600	185
TK-4	TBD	Oil	N/A	FX	500	79	4.1	3.0	OT (Green)	OT (Green)	Good	3,883,600	185
TK-5	TBD	Oil	N/A	FX	500	79	4.1	3.0	OT (Green)	OT (Green)	Good	3,883,600	185
TK-6	TBD	Oil	N/A	FX	500	79	4.1	3.0	OT (Green)	OT (Green)	Good	3,883,600	185
TK-7	TBD	Oil	N/A	FX	500	79	4.1	3.0	OT (Green)	OT (Green)	Good	3,883,600	185
TK-8	TBD	Oil	N/A	FX	500	79	4.1	3.0	OT (Green)	OT (Green)	Good	3,883,600	185
TK-9	TBD	Oil	N/A	FX	500	79	4.1	3.0	OT (Green)	OT (Green)	Good	3,883,600	185
TK-10	TBD	Oil	N/A	FX	500	79	4.1	3.0	OT (Green)	OT (Green)	Good	3,883,600	185
TK-11	TBD	Oil	N/A	FX	500	79	4.1	3.0	OT (Green)	OT (Green)	Good	3,883,600	185
TK-12	TBD	Oil	N/A	FX	500	79	4.1	3.0	OT (Green)	OT (Green)	Good	3,883,600	185
TK-13	TBD	Oil	N/A	FX	500	79	4.1	3.0	OT (Green)	OT (Green)	Good	3,883,600	185
TK-14	TBD	Oil	N/A	FX	500	79	4.1	3.0	OT (Green)	OT (Green)	Good	3,883,600	185
TK-15	TBD	Oil	N/A	FX	500	79	4.1	3.0	OT (Green)	OT (Green)	Good	3,883,600	185
PWTK-1	TBD	Produced Water	N/A	FX	500	79	4.1	3.0	OT (Green)	OT (Green)	Good	15,330,000	730
PWTK-2	TBD	Produced Water	N/A	FX	500	79	4.1	3.0	OT (Green)	OT (Green)	Good	15,330,000	730

ED_004016Q_00002229-00024

Table 2-L2: Liquid Storage Tank Data Codes Reference Table

Roof Type	Seal Type, Welded Tank Seal Type		Seal Type, Riveted Tank Seal Type		Roof, Shell Color	Paint Condition
FX: Fixed Roof	**Mechanical Shoe Seal**	**Liquid-mounted resilient seal**	**Vapor-mounted resilient seal**	**Seal Type**	**WH**: White	Good
IF: Internal Floating Roof	**A**: Primary only	**A**: Primary only	**A**: Primary only	**A**: Mechanical shoe, primary only	**AS**: Aluminum (specular)	Poor
EF: External Floating Roof	**B**: Shoe-mounted secondary	**B**: Weather shield	**B**: Weather shield	**B**: Shoe-mounted secondary	**AD**: Aluminum (diffuse)	
P: Pressure	**C**: Rim-mounted secondary	**C**: Rim-mounted secondary	**C**: Rim-mounted secondary	**C**: Rim-mounted secondary	**LG**: Light Gray	
					MG: Medium Gray	
					BL: Black	
					OT: Other (specify)	

Note: 1.00 bbl = 0.159 M^3 = 42.0 gal

Table 2-M: Materials Processed and Produced (Use additional sheets as necessary.)

Material Processed				Material Produced			
Description	**Chemical Composition**	**Phase (Gas, Liquid, or Solid)**	**Quantity (specify units)**	**Description**	**Chemical Composition**	**Phase**	**Quantity (specify units)**
Oil	Mixed Hydrocarbons	Liquid	1,350,500 bbl/yr	Oil	Mixed Hydrocarbons	Liquid	1,387,000 bbl/yr
Produced Water	Mixed Hydrocarbons	Liquid	730,000 bbl/yr	Produced Water	Mixed Hydrocarbons	Liquid	730,000 bbl/yr
Gas	Mixed Hydrocarbons	Gas	4,000,000 scf/day	Gas	Mixed Hydrocarbons	Gas	4,000,000 scf/day

ED_004016Q_00002229-00025

Table 2-P: Greenhouse Gas Emissions

Applications submitted under 20.2.70, 20.2.72, & 20.2.74 NMAC are required to complete this Table. Power plants, Title V major sources, and PSD major sources must report and calculate all GHG emissions for each unit. Applicants must report potential emission rates in short tons per year (see Section 6.a for assistance). Include GHG emissions during Startup, Shutdown, and Scheduled Maintenance in this table. For minor source facilities that are not power plants, are not Title V, or are not PSD, there are three options for reporting GHGs 1) report GHGs for each individual piece of equipment; 2) report all GHGs from a group of unit types, for example report all combustion source GHGs as a single unit and all venting GHG as a second separate unit; OR 3) check the following box ☐ By cl

		CO_2 ton/yr	N_2O ton/yr	CH_4 ton/yr	SF_6 ton/yr	PFC/HFC ton/yr[2]									Total GHG Mass Basis ton/yr[4]	Total CO_2e ton/yr[5]
Unit No.	**GWPs [1]**	**1**	**298**	**25**	**22,800**	**footnote 3**										
N/A	**mass GHG**															
	CO_2e															
	mass GHG															
	CO_2e															
	mass GHG															
	CO_2e															
	mass GHG															
	CO_2e															
	mass GHG															
	CO_2e															
	mass GHG															
	CO_2e															
	mass GHG															
	CO_2e															
	mass GHG															
	CO_2e															
	mass GHG															
	CO_2e															
	mass GHG															
	CO_2e															
	mass GHG															
	CO_2e															
	mass GHG															
	CO2e															
Total	**mass GHG**															
	CO_2e															

[1] **GWP** (Global Warming Potential): Applicants must use the most current GWPs codified in Table A-1 of 40 CFR part 98. GWPs are subject to change, therefore, applicants need to check 40 CFR 98 to confirm GWP values.

[2] For **HFCs** or **PFCs** describe the specific HFC or PFC compound and use a separate column for each individual compound.

[3] For each new compound, enter the appropriate GWP for each HFC or PFC compound from Table A-1 in 40 CFR 98.

[4] Green house gas emissions on a **mass basis** is the ton per year green house gas emission before adjustment with its GWP.

[5] **CO_2e** means Carbon Dioxide Equivalent and is calculated by multiplying the TPY mass emissions of the green house gas by its GWP.

ED_004016Q_00002229-00026

Section 3

Application Summary and Routine Operations

The **Application Summary** shall include a brief description of the facility and its process. If this facility is to be collocated with another facility, provide details of the other facility including permit or NOI number(s). In case of a revision or modification to a facility, please describe the proposed changes from the original NOI. If equipment is being removed as part of this application, identify this equipment on Table 2A.

Routine or predictable emissions during Startup, Shutdown, and Maintenance (SSM): Provide an overview of how SSM emissions are accounted for in this application. Refer to "Guidance for Submittal of Startup, Shutdown, Maintenance Emissions in Permit Applications (http://www.env.nm.gov/aqb/permit/app_form.html) for more detailed instructions on SSM emissions.

Written description of the routine operations of the facility: Include a description of how each piece of equipment will be operated, how controls will be used, and the fate of both the products and waste generated.

Facility Information Check Off List and Required Supporting Information: Fill out this entire section and indicate what supporting information is included in the application.

If any of the following information is submitted incomplete, the Department shall rule the NOI application incomplete until all required information is submitted.

Application Summary:

This application and accompanying material is a Notice of Intent (NOI) for the W. Escavada UT #307/308/309 well site located near Counselor, New Mexico. The well site is owned and operated by WPX Energy Production, LLC. It is estimated to produce 3,800 bbl/day of oil from eight on site wells.

The facility will consist of one of the compressor engine options listed in Table 3-1.

Table 3-1: Compressor Engine Options

Option No.	Unit Name	Make & Model	Fuel Type
1	ENG-1	Caterpillar G3508B	Natural Gas
			Propane
2	ENG-2	Caterpillar G-3306TAA	Natural Gas
			Propane
3	ENG-3	Caterpillar CG137-8	Natural Gas
			Propane
4	ENG-4	Cummins G8.3C118	Natural Gas
			Propane

These engines can use either natural gas or propane as fuel. The engine option set with the worst case emissions is included in the total facility emissions.

The facility will also consist of: two vapor recovery tanks, fifteen oil tanks, two produced water tanks, four separator heaters, one fuel gas separator heater, either nine smaller generators or three larger generators, two emergency flares, one reciprocating compressor, and up to three electric vapor recovery units (VRU's) for product recovery. The three VRUs will be capable of working in parallel so in the event one of the VRUs goes down or is not operational, the vapors will be directed to the other VRUs for product recovery. Additionally, please reference the cover letter to this application for the site-specific process vs. control determination for the VRU and the Texas Commission on Environmental Quality (TCEQ) guidance document for the basis of the VRU capture efficiency.

ED_004016Q_00002229-00027

Two emergency flares are included in the application because the volume of gas needing to be combusted during an emergency event is unknown. Depending on the age of the well(s), the number of wells on the pad, and the capacity the flare(s), more than one combustion device may be necessary. Examples of emergency events include: when the gathering company has a pipeline issue, such as if a compressor station suddenly goes down, and if the gas suddenly does not meet the pipeline quality specifications and is rejected by the gathering company. In the latter case, it is possible that the gas will have a sudden nitrogen increase due to a nearby frac and will not be accepted by the gathering company until the nitrogen decreases.

These events are not malfunctions as defined in 20.2.7.7.E NMAC but rather emergencies per 20.2.7.113 NMAC. It is not possible to estimate the number of occurrences of such emergencies as they are "sudden and reasonably unforeseeable events beyond the control of the permittee" by nature. However, if notified by a gas gathering company that a planned pipeline maintenance event was to occur, the operational protocol for the subject facility includes shutting the well(s) in for the duration of the planned maintenance event.

The estimated total facility emissions are below 10 lb/hr and 25 tpy for any regulated air pollutant for which there is a New Mexico or National Ambient Air Quality Standard. Therefore, the facility qualifies for an NOI pursuant to 20.2.73 NMAC.

SSM Summary:

SSM emissions are not anticipated to exceed the emission estimates in this application. Engines at this site will start up at no load with a rich mixture, so emissions will be minimal. During shutdown, emissions will be minimal since the fuel and air flow to these engines ceases within seconds of a shutdown. Heaters startup with less fuel input than during steady state so these emissions will be lower. During shutdown, lesser volumes are being sent to the heaters; therefore, NO_X emissions will be lower than at steady state. The tank heaters are electric, therefore there will not be any emissions from these sources. Under steady state conditions, VOC emissions from the tanks are captured by a VRU, a product recovery device, and sent to the sales line. In emergency situations, up to two temporary, portable emergency flares will be used to control tank emissions and/or wellhead gas.

Description of Routine Operations:

W. Escavada UT #307/308/309 is an oil well site that operates 24 hours a day, 7 days a week. The facility separates oil, natural gas, and water from eight on site wells using three-phase separators. From the wellhead(s), the three-phase heated separators (HT 1-4) divert oil and produced water to two vapor recovery tanks (VRT 1-2). After flashing, post-flash produced water is diverted to one of two 500 bbl produced water tanks (PWTK 1-2), and post-flash oil is sent to one of fifteen 500 bbl oil tanks (TK 1-15), from which it is loaded into trucks for transfer off site (OILLOAD-1), and the gas to one heated fuel gas separator (HT-5) or to the compressors (COMP 1-4) driven by the compressor engines (ENG 1-4) for entry into the sales line.

One of five compressor engine options from Table 3-1 will be placed onsite, and each engine will drive a permanent, three-stage reciprocating compressor (COMP 1-4). The compressor engines will be controlled according to requirements specified in NSPS 40 CFR 60 Subpart JJJJ and have been de-rated based on its elevation according to the *AQB 02.002-00 Turbine/Reciprocating Engine Derating* guidance document.

The vapors from the vapor recovery tanks are manifolded to three vapor recovery units (VRU 1-3) as product recovery devices to send the tank vapors into the gas sales line. The vapors from the oil tanks and produced water tanks are manifolded to one vapor recovery unit (VRU-1) as a product recovery device to send the tank vapors into the gas sales line. The facility also includes: either nine 87 hp generators (GEN 1-9) or three 269 hp generators (GEN 10-12). Two emergency flares (FL 1-2) will be placed on site. Fugitive emissions occur from piping and other components (FUG-1). Road dust emissions occur from daily routine traffic to the well site (ROAD-1).

ED_004016Q_00002229-00028

Application Details:

Engines: For each engine, identify the source of the emission factor and provide the requested documentation.

Engine emissions are calculated on an uncontrolled basis using the following emission factors (EFs):

☒ Manufacturer Specifications (Include a copy of each spec sheet in Section 7 with EFs highlighted)
☒ EPA AP-42 Emission Factors (Include a copy of each Table in Section 7 with EFs highlighted)

Engine(s) at this facility are subject to the following Federal Regulation and emissions are based on the emission standards in the following Federal Rule.

☐ Engine(s) are subject to NSPS IIII (Include a copy of the applicability table from the regulation in Section 7 with emission standards highlighted and a low level citation of the applicable parts of the regulation in Section 8)
☒ Engine(s) are subject to NSPS JJJJ (Include a copy of the applicability table from the regulation in Section 7 with emission standards highlighted and a low level citation of the applicable parts of the regulation in Section 8)
☐ Engine(s) are subject to NESHAP ZZZZ (Include a copy of the applicability table from the regulation in Section 7 with emission standards or requirements highlighted and a low level citation of the applicable parts of the regulation in Section 8)

Vapor Recovery Tower, Ultra Low Pressure Separator, Flash Tower Located Upstream of Storage Vessels: If the facility contains one of the following units located upstream of the storage vessels and is used to flash and capture flashing emissions, check the appropriate box and provide a process vs control determination in accordance with US EPA Guidance.

☐ Vapor Recovery Tower and VRU Compressor
☐ ULPS and VRU Compressor
☐ Flash Tower and VRU Compressor
☐ The complete process vs control determination for this unit prepared in accordance with EPA Guidance is included in Section 6.

Vapor Recovery Unit (VRU) attached to Storage Vessels: Check the box below if this facility is using a VRU to reduce storage vessel emissions to limit the PTE to below NSPS OOOO or NSPS OOOOa applicability thresholds:

☐ VRU controlling Storage Vessel emissions and the facility is subject to the requirements under 60.5411(b) and (c)
☒ VRU controlling Storage Vessel emissions and the facility is subject to the following requirements:
(i) You meet the cover requirements specified in §60.5411a(b).
(ii) You meet the closed vent system requirements specified in §60.5411a(c) and (d).
(iii) You must maintain records that document compliance with paragraphs (e)(3)(i) and (ii) of this section.
(iv) In the event of removal of apparatus that recovers and routes vapor to a process, or operation that is inconsistent with the conditions specified in paragraphs (e)(3)(i) and (ii) of this section, you must determine the storage vessel's potential for VOC emissions according to this section within 30 days of such removal or operation.

Flaring Scenarios: Read through the possible scenarios below and check the box next to the facility operating scenario. Flares shall assume a destruction efficiency of 95%, unless the facility is subject to requirements for flares under 40 CFR 60.18 or a higher destruction efficiency (up to 98%) is supported by a manufacturer specification sheet for that unit.

☐ The flare controls storage vessels in accordance with 40 CFR 60, Subpart OOOO or OOOOa
☒ The facility has a flare which operates only during maintenance events, such as VRU downtime (because flaring maintenance emissions is not federally enforceable, the emissions during maintenance must be represented as both controlled and uncontrolled
☐ The emissions during VRU downtime are represented as uncontrolled VOC emissions from the compressor
☐ The combustion emissions during VRU downtime are represented as controlled emissions from the flare

ED_004016Q_00002229-00029

Section 4

Process Flow Sheet

A **process flow sheet** indicating all individual equipment, all emission points, and types of control applied to those points. All units should be labeled and the unit numbering system should be consistent throughout this application. Identify all sources of emissions with a vertical arrow. Label each of the different material streams (crude oil, gas, water) using the legend below. See example of a process flow sheet here:
https://www.env.nm.gov/aqb/permit/Permit_Apps/AirQualityPermitNOIApplication.html

Written description of the routine operations of the facility: Include a detailed description of how each piece of equipment will be operated, how controls will be used, and the fate of both the products and waste generated. See example of a written description of routine operations here:
https://www.env.nm.gov/aqb/permit/Permit_Apps/AirQualityPermitNOIApplication.html

---

A process flow sheet is provided on the following page.

ED_004016Q_00002229-00030

Emission Unit (EU)	Description
ENG 1-4	Compressor Engine
VRT 1-2	Vapor Recovery Process Tanks
TK 1-15	Post-Flash Oil Tanks
PWTK 1-2	Post-Flash Produced Water (PW) Tanks
HT 1-4	Separator Heaters
HT-5	Fuel Gas Separator Heater
GEN 1-12	Generators
OILLOAD-1	Truck Loading (Oil Loadout)
FUG-1	Equipment Leaks (Fugitives)
COMP 1-4	Reciprocating Compressor(s)
FL 1-2	Emergency Flares
ROAD-1	Road Dust
VRU 1-3	Vapor Recovery Units

Process Flow Diagram
W. Escavada UT #307/308/309
WPX Energy Production, LLC
Last Update: 12/14/2017

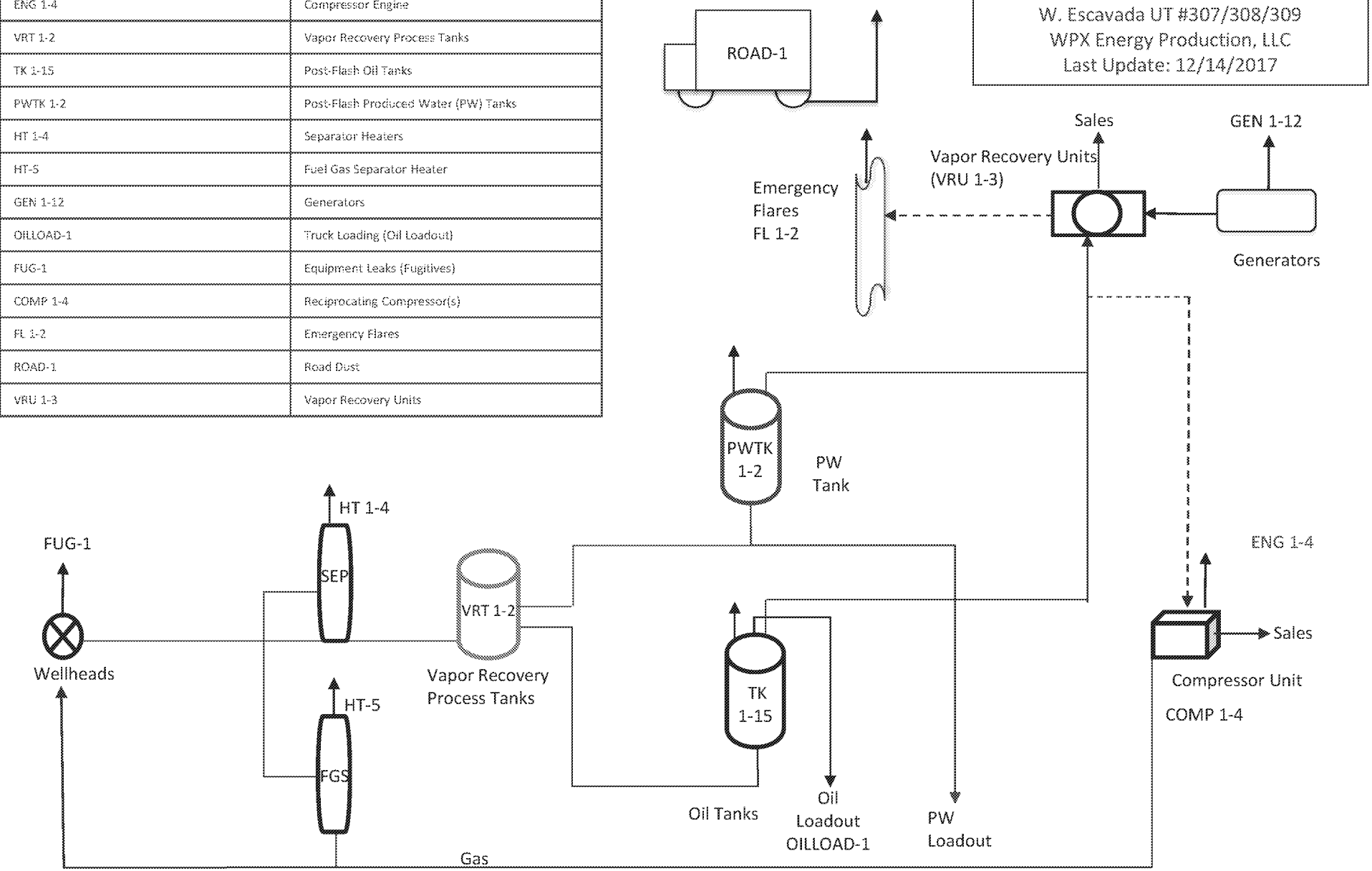

WPXENERGY

Section 5

All Calculations

The Department has developed Equipment Forms which are required to be used in the NOI Oil and Gas Production Application. Forms for engines, heaters, turbines, flares, roads, enclosed combustion devices have been developed and should be submitted as part of this application. The forms for tank emissions are under development and will be posted when completed.

The equipment forms can be accessed at the following link:
https://www.env.nm.gov/aqb/permit/Permit_Apps/AirQualityPermitNOIApplication.html

In addition to the Department's Equipment Forms, applicants may submit calculations on their own forms. If submitting additional calculations, include these calculations in an Appendix to the application. Show all calculations used to determine both the hourly and annual controlled and uncontrolled emission rates. All calculations shall be performed keeping a minimum of three significant figures. Document the source of each emission factor used (if an emission rate is carried forward and not revised, then a statement to that effect is required). If identical units are being permitted and will be subject to the same operating conditions, submit calculations for only one unit and a note specifying what other units to which the calculations apply. All formulas and calculations used to calculate emissions must be submitted. The "Calculations" tab has been provided to allow calculations to be linked to the emissions tables. Add additional "Calc" tabs as needed. If the Section 2 or other spread sheets are used, all calculation spread sheet(s) shall be submitted electronically in Microsoft Excel compatible format so that formulas and input values can be checked. Format all spread sheets and calculations such that the reviewer can follow the logic and verify the input values. Define all variables. If calculation spread sheets are not used, provide the original formulas with defined variables. Additionally, provide subsequent formulas showing the input values for each variable in the formula. All calculations, including those calculations are imbedded in the Calc tab of Section 2 portion of the application, the printed Calc tab(s), should be submitted under this section.

Tank Emissions Calculations: The information provided to the AQB shall include a discussion of the method used to estimate tank-flashing emissions, accuracy of the model, the input and output summary from simulation models and software, all calculations, documentation of any assumptions used, descriptions of sampling methods and conditions, copies of any lab sample analysis. If Pro-Max or Hysis is used, all relevant input parameters shall be reported, including separator pressure, gas throughput, and all other relevant parameters necessary for flashing calculation. Highlight the parameters on the input and output summary that were used to calculate the emissions reported in Table 2D and 2E (see example of input and output summary here: https://www.env.nm.gov/aqb/permit/Permit_Apps/AirQualityPermitNOIApplication.html). For each crude oil storage tank, identify if the tanks are in series or in parallel.

SSM Calculations: It is the applicant's responsibility to provide an estimate of SSM emissions or to provide justification for not doing so. In this Section, provide emissions calculations for Startup, Shutdown, and Routine Maintenance (SSM) emissions listed in the Section 2 SSM Tables and the rational for why the others are reported as zero (or left blank in the SSM/GHG Tables). Refer to "Guidance for Submittal of Startup, Shutdown, Maintenance Emissions in Permit Applications (http://www.env.nm.gov/aqb/permit/app_form.html) for more detailed instructions on calculating SSM emissions.

Road Calculations: Calculate fugitive particulate emissions and enter haul road fugitives in Tables 2-A, 2-D and 2-E for:

1. If you transport raw material, process material and/or product into or out of or within the facility and have PER emissions greater than 0.5 tpy.
2. If you transport raw material, process material and/or product into or out of the facility more frequently than one round trip per day.

Significant Figures:
A. All emissions standards are deemed to have at least two significant figures, but not more than three significant figures.
B. At least 5 significant figures shall be retained in all intermediate calculations.
C. In calculating emissions to determine compliance with an emission standard, the following rounding off procedures shall be used:

(1) If the first digit to be discarded is less than the number 5, the last digit retained shall not be changed;
(2) If the first digit discarded is greater than the number 5, or if it is the number 5 followed by at least one digit other than the number zero, the last figure retained shall be increased by one unit; **and**

ED_004016Q_00002229-00032

(3) If the first digit discarded is exactly the number 5, followed only by zeros, the last digit retained shall be rounded upward if it is an odd number, but no adjustment shall be made if it is an even number.
(4) The final result of the calculation shall be expressed in the units of the standard.

Control Devices: In accordance with 20.2.73.200.B(7) NMAC, the permittee shall report all control devices and list each pollutant controlled by the control device regardless if the applicant takes credit for the reduction in emissions. The applicant can indicate in this section of the application if they chose to not take credit for the reduction in emission rates. Only uncontrolled emission rates can be considered to determine applicability unless the state or federal Acts require the control. This information is necessary to determine if federally enforceable conditions are necessary for the control device, and/or if the control device produces its own regulated pollutants or increases emission rates of other pollutants.

Equipment Forms Submitted in this Section:

Check box if present	Quantity	Equipment Type
☒	4	Compressor Engine(s)
☒	N/A	Haul Road
☒	N/A	Fugitive Emissions
☒	5	Heaters(s)
☒	N/A	Loading
☒	12	Generators
☒	15	Oil Tanks
☒	2	Produced Water Tank
☒	2	Flare(s)

ED_004016Q_00002229-00033

Summary of Air Emission Units (ton/yr)

Unit Name	Unit Description	Qty	Potential Emissions (tons/year) Uncontrolled + No Product Recovered						Potential Emissions (tons/year) Controlled + Product Recovery						
			NOx	CO	VOC	SO2	PM10	HAPs	NOx	CO	VOC	SO2	PM10	HAPs	CO2e
ENG-1*	Worst-Case Composite Engine Emissions	N/A	51.3	43.7	26.1	0.09	1.24	3.80	8.65	17.1	4.27	0.09	1.24	3.80	3124
VRT-1	Vapor Recovery Tank	1 of 2	--	--	728.6	--	--	11.8	--	--	5.83	--	--	0.09	36
VRT-2	Vapor Recovery Tank	2 of 2	--	--	728.6	--	--	11.8	--	--	5.83	--	--	0.09	36
TK-1	Post-Flash Oil Tank	1 of 15	--	--	3.05	--	--	0.08	--	--	0.15	--	--	0.00	1
TK-2	Post-Flash Oil Tank	2 of 15	--	--	3.05	--	--	0.08	--	--	0.15	--	--	0.00	1
TK-3	Post-Flash Oil Tank	3 of 15	--	--	3.05	--	--	0.08	--	--	0.15	--	--	0.00	1
TK-4	Post-Flash Oil Tank	4 of 15	--	--	3.05	--	--	0.08	--	--	0.15	--	--	0.00	1
TK-5	Post-Flash Oil Tank	5 of 15	--	--	3.05	--	--	0.08	--	--	0.15	--	--	0.00	1
TK-6	Post-Flash Oil Tank	6 of 15	--	--	3.05	--	--	0.08	--	--	0.15	--	--	0.00	1
TK-7	Post-Flash Oil Tank	7 of 15	--	--	3.05	--	--	0.08	--	--	0.15	--	--	0.00	1
TK-8	Post-Flash Oil Tank	8 of 15	--	--	3.05	--	--	0.08	--	--	0.15	--	--	0.00	1
TK-9	Post-Flash Oil Tank	9 of 15	--	--	3.05	--	--	0.08	--	--	0.15	--	--	0.00	1
TK-10	Post-Flash Oil Tank	10 of 15	--	--	3.05	--	--	0.08	--	--	0.15	--	--	0.00	1
TK-11	Post-Flash Oil Tank	11 of 15	--	--	3.05	--	--	0.08	--	--	0.15	--	--	0.00	1
TK-12	Post-Flash Oil Tank	12 of 15	--	--	3.05	--	--	0.08	--	--	0.15	--	--	0.00	1
TK-13	Post-Flash Oil Tank	13 of 15	--	--	3.05	--	--	0.08	--	--	0.15	--	--	0.00	1
TK-14	Post-Flash Oil Tank	14 of 15	--	--	3.05	--	--	0.08	--	--	0.15	--	--	0.00	1
TK-15	Post-Flash Oil Tank	15 of 15	--	--	3.05	--	--	0.08	--	--	0.15	--	--	0.00	1
PWTK-1	Post-Flash PW Tank	1 of 2	--	--	0.04	--	--	0.00	--	--	0.00	--	--	0.00	0
PWTK-2	Post-Flash PW Tank	2 of 2	--	--	0.04	--	--	0.00	--	--	0.00	--	--	0.00	0
HT-1	Separator Heater	1 of 4	0.54	0.45	0.03	0.00	0.04	0.01	0.54	0.45	0.03	0.00	0.04	0.01	641
HT-2	Separator Heater	2 of 4	0.54	0.45	0.03	0.00	0.04	0.01	0.54	0.45	0.03	0.00	0.04	0.01	641
HT-3	Separator Heater	3 of 4	0.54	0.45	0.03	0.00	0.04	0.01	0.54	0.45	0.03	0.00	0.04	0.01	641
HT-4	Separator Heater	4 of 4	0.54	0.45	0.03	0.00	0.04	0.01	0.54	0.45	0.03	0.00	0.04	0.01	641
HT-5	Fuel Gas Separator Heater	1 of 1	0.30	0.25	0.02	0.00	0.02	0.01	0.30	0.25	0.02	0.00	0.02	0.01	359
GEN-1*	Worst-Case Composite Generator Emissions	N/A	1.21	3.18	0.26	--	--	2.27	1.21	3.18	0.26	--	--	2.27	3887
OILLOAD-1	Oil Loadout	1 of 1	--	--	41.1	--	--	1.09	--	--	41.1	--	--	1.09	--
FUG-1	Fugitives	N/A	--	--	15.6	--	--	0.00	--	--	15.6	--	--	1.07	376
COMP-1*	Worst-Case Composite Compressor Emissions	N/A	--	--	1.39	--	--	0.18	--	--	1.39	--	--	0.18	59
FL-1	Emergency Flare	1 of 2	0.03	0.14	--	--	--	--	0.03	0.16	0.04	0.00	0.00	--	7
FL-2	Emergency Flare	2 of 2	0.03	0.14	--	--	--	--	0.03	0.16	0.04	0.00	0.00	--	7
ROAD-1	Road Dust	N/A	--	--	--	--	1.92	--	--	--	--	--	1.92	--	--
	Facility-WideTotal Emissions (ton/year)		55.0	49.2	1587.6	0.09	3.34	32.1	12.4	22.7	76.7	0.09	3.34	8.70	10470

** Composite emissions represent the worst case emissions.*

Summary of Air Emission Units (lb/hr)

Unit Name	Unit Description	Qty	Potential Emissions (lb/hr) Uncontrolled + No Product Recovered						Potential Emissions (lb/hr) Controlled + Product Recovery					
			NOx	CO	VOC	SO2	PM10	HAPs	NOx	CO	VOC	SO2	PM10	HAPs
ENG-1*	Worst-Case Composite Engine Emissions	N/A	11.7	10.0	5.96	0.02	0.28	0.87	1.98	3.91	0.97	0.02	0.28	0.87
VRT-1	Vapor Recovery Tank	1 of 2	--	--	166.4	--	--	2.69	--	--	1.33	--	--	0.02
VRT-2	Vapor Recovery Tank	2 of 2	--	--	166.4	--	--	2.69	--	--	1.33	--	--	0.02
TK-1	Post-Flash Oil Tank	1 of 15	--	--	0.70	--	--	0.02	--	--	0.03	--	--	0.00
TK-2	Post-Flash Oil Tank	2 of 15	--	--	0.70	--	--	0.02	--	--	0.03	--	--	0.00
TK-3	Post-Flash Oil Tank	3 of 15	--	--	0.70	--	--	0.02	--	--	0.03	--	--	0.00
TK-4	Post-Flash Oil Tank	4 of 15	--	--	0.70	--	--	0.02	--	--	0.03	--	--	0.00
TK-5	Post-Flash Oil Tank	5 of 15	--	--	0.70	--	--	0.02	--	--	0.03	--	--	0.00
TK-6	Post-Flash Oil Tank	6 of 15	--	--	0.70	--	--	0.02	--	--	0.03	--	--	0.00
TK-7	Post-Flash Oil Tank	7 of 15	--	--	0.70	--	--	0.02	--	--	0.03	--	--	0.00
TK-8	Post-Flash Oil Tank	8 of 15	--	--	0.70	--	--	0.02	--	--	0.03	--	--	0.00
TK-9	Post-Flash Oil Tank	9 of 15	--	--	0.70	--	--	0.02	--	--	0.03	--	--	0.00
TK-10	Post-Flash Oil Tank	10 of 15	--	--	0.70	--	--	0.02	--	--	0.03	--	--	0.00
TK-11	Post-Flash Oil Tank	11 of 15	--	--	0.70	--	--	0.02	--	--	0.03	--	--	0.00
TK-12	Post-Flash Oil Tank	12 of 15	--	--	0.70	--	--	0.02	--	--	0.03	--	--	0.00
TK-13	Post-Flash Oil Tank	13 of 15	--	--	0.70	--	--	0.02	--	--	0.03	--	--	0.00
TK-14	Post-Flash Oil Tank	14 of 15	--	--	0.70	--	--	0.02	--	--	0.03	--	--	0.00
TK-15	Post-Flash Oil Tank	15 of 15	--	--	0.70	--	--	0.02	--	--	0.03	--	--	0.00
PWTK-1	Post-Flash PW Tank	1 of 2	--	--	0.01	--	--	0.00	--	--	0.00	--	--	0.00
PWTK-2	Post-Flash PW Tank	2 of 2	--	--	0.01	--	--	0.00	--	--	0.00	--	--	0.00
HT-1	Separator Heater	1 of 4	0.12	0.10	0.01	0.00	0.01	0.00	0.12	0.10	0.01	0.00	0.01	0.00
HT-2	Separator Heater	2 of 4	0.12	0.10	0.01	0.00	0.01	0.00	0.12	0.10	0.01	0.00	0.01	0.00
HT-3	Separator Heater	3 of 4	0.12	0.10	0.01	0.00	0.01	0.00	0.12	0.10	0.01	0.00	0.01	0.00
HT-4	Separator Heater	4 of 4	0.12	0.10	0.01	0.00	0.01	0.00	0.12	0.10	0.01	0.00	0.01	0.00
HT-5	Fuel Gas Separator Heater	1 of 1	0.07	0.06	0.00	0.00	0.01	0.00	0.07	0.06	0.00	0.00	0.01	0.00
GEN-1*	Worst-Case Composite Generator Emissions	N/A	0.28	0.73	0.06	0.00	0.00	0.52	0.28	0.73	0.06	0.00	0.00	0.52
OILLOAD-1	Oil Loadout	1 of 1	--	--	17.8	--	--	0.25	--	--	17.8	--	--	0.25
FUG-1	Fugitives	N/A	--	--	3.56	--	--	0.00	--	--	3.56	--	--	0.24
COMP-1*	Worst-Case Composite Compressor Emissions	N/A	--	--	0.32	--	--	0.04	--	--	0.32	--	--	0.04
FL-1	Emergency Flare	1 of 2	0.01	0.03	0.00	0.00	0.00	0.00	0.01	0.04	0.01	0.00	0.00	0.00
FL-2	Emergency Flare	2 of 2	0.01	0.03	0.00	0.00	0.00	0.00	0.01	0.04	0.01	0.00	0.00	0.00
ROAD-1	Road Dust	N/A	--	--	--	--	1.52	--	--	--	--	--	1.52	--
	Facility-WideTotal Emissions (lbs/hr)		12.6	11.2	370.8	0.02	1.84	7.34	2.83	5.18	25.9	0.02	1.84	1.99

** Composite emissions represent the worst case emissions.*

Summary of Compressor Engine Air Emission Units

Option Number	Unit Name	Make & Model	Fuel Type[1]	Potential Emissions (tons/year) Uncontrolled + No Product Recovered												Potential Emissions (tons/year) Controlled + Product Recovery														
				NOx		CO		VOC		SO2		PM		HAPs		NOx		CO		VOC		SO2		PM		HAPs		Formaldehyde		CO2e
				lb/hr	tons/yr	lb/hr	tons/yr	lb/hr	tons/yr	lb/hr	tons/yr	lb/hr	tons/yr	lb/hr	tons/yr	lb/hr	tons/yr	lb/hr	tons/yr	lb/hr	tons/yr	lb/hr	tons/yr	lb/hr	tons/yr	lb/hr	tons/yr	lb/hr	tons/yr	tons/yr
1	ENG-1	Caterpillar G3508B	Natural Gas	1.39	6.10	3.59	15.7	0.97	4.27	0.00	0.00	0.05	0.23	0.67	2.92	1.39	6.10	2.78	12.2	0.97	4.27	0.00	0.00	0.05	0.23	0.22	0.97	0.14	0.61	2657
			Propane	1.39	6.10	4.47	19.6	5.96	26.1	0.02	0.09	0.28	1.24	0.87	3.80	1.39	6.10	2.78	12.2	0.97	4.27	0.02	0.09	0.28	1.24	0.87	3.80	0.39	1.71	3124
			Option 1 Worst-Case Emissions:	1.39	6.10	4.47	19.6	5.96	26.1	0.02	0.09	0.28	1.24	0.87	3.80	1.39	6.10	2.78	12.2	0.97	4.27	0.02	0.09	0.28	1.24	0.87	3.80	0.39	1.71	3124
2	ENG-2	Caterpillar G-3306TAA	Natural Gas	11.7	51.3	0.85	3.73	0.30	1.31	0.00	0.00	0.03	0.14	0.08	0.34	0.43	1.87	0.85	3.73	0.30	1.31	0.00	0.00	0.03	0.14	0.08	0.34	0.06	0.28	854
			Propane	2.56	11.2	2.37	10.4	1.53	6.69	0.00	0.00	0.09	0.40	0.34	1.43	1.04	4.56	2.06	9.04	0.16	0.72	0.00	0.00	0.09	0.40	0.34	1.43	0.19	0.82	1015
			Option 2 Worst-Case Emissions:	11.7	51.3	2.37	10.4	1.53	6.69	0.00	0.00	0.09	0.40	0.34	1.43	1.04	4.56	2.06	9.04	0.30	1.31	0.00	0.00	0.09	0.40	0.34	1.43	0.19	0.82	1015
3	ENG-3	Caterpillar CG137-8	Natural Gas	9.99	43.7	9.99	43.7	0.57	2.47	0.00	0.00	0.06	0.26	0.07	0.32	0.81	3.54	1.61	7.07	0.57	2.47	0.00	0.00	0.06	0.26	0.07	0.32	0.05	0.21	1582
			Propane	4.74	20.8	4.40	19.3	2.83	12.39	0.00	0.00	0.17	0.75	0.64	2.65	1.98	8.65	3.91	17.1	0.31	1.36	0.00	0.00	0.17	0.75	0.64	2.65	0.35	1.53	1880
			Option 3 Worst-Case Emissions:	9.99	43.7	9.99	43.7	2.83	12.39	0.00	0.00	0.17	0.75	0.64	2.65	1.98	8.65	3.91	17.1	0.57	2.47	0.00	0.00	0.17	0.75	0.64	2.65	0.35	1.53	1880
4	ENG-4	Cummins G8.3C118	Natural Gas	2.54	11.1	2.40	10.5	0.60	2.63	0.00	0.00	0.02	0.07	0.02	0.10	0.22	0.96	0.44	1.92	0.15	0.67	0.00	0.00	0.02	0.07	0.02	0.10	0.02	0.07	420
			Propane	1.26	5.51	1.17	5.12	0.75	3.29	0.00	0.00	0.05	0.20	0.17	0.71	0.54	2.34	1.06	4.64	0.21	0.91	0.00	0.00	0.05	0.20	0.17	0.71	0.09	0.41	500
			Option 4 Worst-Case Emissions:	2.54	11.1	2.40	10.5	0.75	3.29	0.00	0.00	0.05	0.20	0.17	0.71	0.54	2.34	1.06	4.64	0.21	0.91	0.00	0.00	0.05	0.20	0.17	0.71	0.09	0.41	500
			Worst-Case Composite Engine Emissions	11.7	51.3	10.0	43.7	5.96	26.1	0.02	0.09	0.28	1.24	0.87	3.80	1.98	8.65	3.91	17.1	0.97	4.27	0.02	0.09	0.28	1.24	0.87	3.80	0.39	1.71	3124

Notes:
1 - These engines can use either natural gas or propane as fuel.

Summary of Compressor Air Emission Units

Option Number	Unit Name	Source Description	Potential Emissions (tons/year) Uncontrolled + No Product Recovered VOC lb/hr	VOC tons/yr	HAPs lb/hr	HAPs tons/yr	Potential Emissions (tons/year) Controlled + Product Recovery VOC lb/hr	VOC tons/yr	HAPs lb/hr	HAPs tons/yr	CO2e tons/yr
1	COMP-1	Compressor	0.32	1.39	0.04	0.18	0.32	1.39	0.04	0.18	59
		Option 1 Total:	0.32	1.39	0.04	0.18	0.32	1.39	0.04	0.18	59
2	COMP-2	Compressor	0.01	0.03	0.00	0.00	0.01	0.03	0.00	0.00	6
		Option 2 Total:	0.01	0.03	0.00	0.00	0.01	0.03	0.00	0.00	6
3	COMP-3	Compressor	0.12	0.52	0.02	0.07	0.12	0.52	0.02	0.07	25
		Option 3 Total:	0.12	0.52	0.02	0.07	0.12	0.52	0.02	0.07	25
4	COMP-4	Compressor	0.01	0.03	0.00	0.00	0.01	0.03	0.00	0.00	6
		Option 4 Total:	0.01	0.03	0.00	0.00	0.01	0.03	0.00	0.00	6
Worst-Case Composite Compressor Emissions			0.32	1.39	0.04	0.18	0.32	1.39	0.04	0.18	59

Summary of Generator Emission Units

Option Number	Unit Name	Source Description	Potential Emissions (tons/year) Uncontrolled + No Product Recovered								Potential Emissions (tons/year) Controlled + Product Recovery								CO2e
			NOx		CO		VOC		HAPs		NOx		CO		VOC		HAPs		
			lb/hr	tons/yr	lb/hr	tons/yr	lb/hr	tons/yr	lb/hr	tons/yr	lb/hr	tons/yr	lb/hr	tons/yr	lb/hr	tons/yr	lb/hr	tons/yr	tons/yr
1	GEN-1	Generator	0.03	0.13	0.08	0.35	0.01	0.03	0.06	0.25	0.03	0.13	0.08	0.35	0.01	0.03	0.06	0.25	432
	GEN-2	Generator	0.03	0.13	0.08	0.35	0.01	0.03	0.06	0.25	0.03	0.13	0.08	0.35	0.01	0.03	0.06	0.25	432
	GEN-3	Generator	0.03	0.13	0.08	0.35	0.01	0.03	0.06	0.25	0.03	0.13	0.08	0.35	0.01	0.03	0.06	0.25	432
	GEN-4	Generator	0.03	0.13	0.08	0.35	0.01	0.03	0.06	0.25	0.03	0.13	0.08	0.35	0.01	0.03	0.06	0.25	432
	GEN-5	Generator	0.03	0.13	0.08	0.35	0.01	0.03	0.06	0.25	0.03	0.13	0.08	0.35	0.01	0.03	0.06	0.25	432
	GEN-6	Generator	0.03	0.13	0.08	0.35	0.01	0.03	0.06	0.25	0.03	0.13	0.08	0.35	0.01	0.03	0.06	0.25	432
	GEN-7	Generator	0.03	0.13	0.08	0.35	0.01	0.03	0.06	0.25	0.03	0.13	0.08	0.35	0.01	0.03	0.06	0.25	432
	GEN-8	Generator	0.03	0.13	0.08	0.35	0.01	0.03	0.06	0.25	0.03	0.13	0.08	0.35	0.01	0.03	0.06	0.25	432
	GEN-9	Generator	0.03	0.13	0.08	0.35	0.01	0.03	0.06	0.25	0.03	0.13	0.08	0.35	0.01	0.03	0.06	0.25	432
		Option 1 Total:	0.28	1.21	0.73	3.18	0.06	0.26	0.52	2.27	0.28	1.21	0.73	3.18	0.06	0.26	0.52	2.27	3887
2	GEN-10	Generator	0.08	0.36	0.22	0.96	0.02	0.09	0.16	0.68	0.08	0.36	0.22	0.96	0.02	0.09	0.16	0.68	1169
	GEN-11	Generator	0.08	0.36	0.22	0.96	0.02	0.09	0.16	0.68	0.08	0.36	0.22	0.96	0.02	0.09	0.16	0.68	1169
	GEN-12	Generator	0.08	0.36	0.22	0.96	0.02	0.09	0.16	0.68	0.08	0.36	0.22	0.96	0.02	0.09	0.16	0.68	1169
		Option 2 Total:	0.25	1.09	0.66	2.88	0.06	0.26	0.47	2.05	0.25	1.09	0.66	2.88	0.06	0.26	0.47	2.05	3508
	Worst-Case Composite Generator Emissions		0.28	1.21	0.73	3.18	0.06	0.26	0.52	2.27	0.28	1.21	0.73	3.18	0.06	0.26	0.52	2.27	3887

Engine Emission Detail Sheet

Item	Value
Source Name:	ENG-1
Description:	Compressor Engine
QTY:	1 of 1
Make:	Caterpillar
Model:	Caterpillar G3508B
Serial Number:	TBD
Manufacture Date:	After 7/1/2010
Fuel Type:	Natural Gas
Engine Type:	4SLB

Item	Value	Units	Source
Rated Horsepower:	690	hp	Manufacturer
Derated Horsepower:	632*	hp	AQB 02.002-00, *Turbine/Reciprocating Engine Derating*
Heat Rate:	5.18	MMBtu/hr	Calculated
Fuel Consumption:	8203	Btu/hp-hr	Manufacturer
Fuel Heat Value:	1020	btu/scf	Gas Analysis
Emisson Controls:	Catalyst		Manufacturer
Control Efficiency			
Formaldehyde:	76%		Manufacturer
Control Efficiency NOx:	0%		Manufacturer/JJJJ
Control Efficiency VOC:	0%		Manufacturer/JJJJ
Control Efficiency CO:	22%		Manufacturer/JJJJ
Engine Speed:	1400	RPM	Manufacturer
Potential Operation:	8760	hr/yr	
Elevation:	6826	ft	
Sulfur Content	0.0	grains S/MMscf	Gas Analysis

Potential Emissions

Pollutant	Uncontrolled Emissions				Controlled Emissions				Source of Controlled Emission Factor
	EF	Units	(lb/hr)	(tpy)	EF	Units	(lb/hr)	(tpy)	
NOx	1.00**	g/hp-hr	1.39	6.10	1.00	g/hp-hr	1.39	6.10	40 CFR 60 Subpart JJJJ
VOC (less formaldehyde)	0.70**	g/hp-hr	0.975	4.27	0.70	g/hp-hr	0.975	4.27	40 CFR 60 Subpart JJJJ
CO	2.58***	g/hp-hr	3.59	15.7	2.00	g/hp-hr	2.78	12.2	40 CFR 60 Subpart JJJJ
SO2	0.000588	lb/mmBtu	0.00	0.00	0.000588	lb/mmBtu	0.00	0.00	EPA AP-42 Table 3.2-2
PM10****	0.009987	lb/mmBtu	0.0517	0.227	0.009987	lb/mmBtu	0.0517	0.227	EPA AP-42 Table 3.2-2

HAPs	Uncontrolled Emission Factor	Units	Uncontrolled Emissions		Controlled Emissions		Source of Uncontrolled Emission Factor
	EF	Units	(lb/hr)	(tpy)	(lb/hr)	(tpy)	
Formaldehyde	0.420	g/hp-hr	0.585	2.56	0.140	0.615	Manufacturer
Acetaldehyde	0.00836	lb/mmBtu	0.0433	0.190	0.0433	0.190	EPA AP-42 Table 3.2-2
Acrolein	0.00514	lb/mmBtu	0.0266	0.117	0.0266	0.117	EPA AP-42 Table 3.2-2
Benzene	0.00044	lb/mmBtu	0.00228	0.00998	0.00228	0.00998	EPA AP-42 Table 3.2-2
Ethylbenzene	0.0000397	lb/mmBtu	0.000206	0.000901	0.000206	0.000901	EPA AP-42 Table 3.2-2
n-Hexane	0.00111	lb/mmBtu	0.00575	0.0252	0.00575	0.0252	EPA AP-42 Table 3.2-2
Toluene	0.000408	lb/mmBtu	0.00211	0.00926	0.00211	0.00926	EPA AP-42 Table 3.2-2
Xylene	0.000184	lb/mmBtu	0.000953	0.00417	0.000953	0.00417	EPA AP-42 Table 3.2-2
		TOTAL HAP's:	0.666	2.92	0.222	0.971	

Notes:

* - This engine has been derated in accordance to NMED guidance procedure number: AQB 02.002-00

** - Uncontrolled and controlled NOx and VOC emission factors based on 40 CFR 60 Subpart JJJJ emission standards as manufacturer uncontrolled emission factors are lower than JJJJ standards.

*** - Uncontrolled emission factor for CO was taken from the Manufacturer technical data sheets. Controlled emission factor for CO based on 40 CFR 60 Subpart JJJJ emission standards.

**** - PM10 emissions include filterable and condensable particulates.

Sample Calculation for NOx

1.00 g/hp-hr * 632 hp / 453.59 g/lb * 8760 hr/yr / 2000 lb/ton = 6.10 tpy

Engine Emission Detail Sheet

Item	Value
Source Name:	ENG-1
Description:	Compressor Engine
QTY:	1 of 1
Make:	Caterpillar
Model:	Caterpillar G3508B
Serial Number:	TBD
Manufacture Date:	After 7/1/2010
Fuel Type:	Propane
Engine Type:	4SLB

Item	Value	Units	Source
Rated Horsepower:	690	hp	Manufacturer
Derated Horsepower:	632*	hp	AQB 02.002-00, *Turbine/Reciprocating Engine Derating*
Heat Rate:	5.13	MMBtu/hr	Calculated
Fuel Consumption:	8116	Btu/hp-hr	Manufacturer
Fuel Use	56.63	gal/hr	Calculated
Fuel Heat Value:	0.0905	MMBtu/gal	AP42 Appendix A, page A-6
Emisson Controls:	Catalyst		Manufacturer
Control Efficiency			
Formaldehyde:	0%		Manufacturer
Control Efficiency NOx:	0%		Manufacturer/JJJJ
Control Efficiency VOC:	84%		Manufacturer/JJJJ
Control Efficiency CO:	38%		Manufacturer/JJJJ
Engine Speed:	1400	RPM	Manufacturer
Potential Operation:	8760	hr/yr	
Elevation:	6826	ft	
Sulfur Content	0.0	grains S/MMscf	Gas Analysis

Potential Emissions

Pollutant	Uncontrolled Emissions				Controlled Emissions				Source of Controlled Emission Factor
	EF	Units	(lb/hr)	(tpy)	EF	Units	(lb/hr)	(tpy)	
NOx	1.00**	g/hp-hr	1.39	6.10	1.00	g/hp-hr	1.39	6.10	40 CFR 60 Subpart JJJJ
VOC (less formaldehyde)	4.28***	g/hp-hr	5.96	26.10	0.70	g/hp-hr	0.975	4.27	40 CFR 60 Subpart JJJJ
CO	3.21***	g/hp-hr	4.47	19.6	2.00	g/hp-hr	2.78	12.2	40 CFR 60 Subpart JJJJ
SO2	0.35	lb/1000 gal	0.0198	0.0868	0.35	lb/1000 gal	0.0198	0.0868	Mojave Desert Air Quality Management District
PM10	5.00	lb/1000 gal	0.283	1.24	5.00	lb/1000 gal	0.283	1.24	Mojave Desert Air Quality Management District

HAPs	Uncontrolled Emission Factor	Units	Uncontrolled Emissions		Controlled Emissions		Source of Uncontrolled Emission Factor
	EF	Units	(lb/hr)	(tpy)	(lb/hr)	(tpy)	
Formaldehyde	0.280	g/hp-hr	0.390	1.71	0.390	1.71	Manufacturer
Acetaldehyde	3.29	lb/1000 gal	0.186	0.816	0.186	0.816	Mojave Desert Air Quality Management District
Acrolein	2.50	lb/1000 gal	0.142	0.621	0.142	0.621	Mojave Desert Air Quality Management District
Benzene	0.908	lb/1000 gal	0.0514	0.225	0.0514	0.225	Mojave Desert Air Quality Management District
Ethylbenzene	0.0468	lb/1000 gal	0.00265	0.0116	0.00265	0.0116	Mojave Desert Air Quality Management District
n-Hexane	0.888	lb/1000 gal	0.0503	0.220	0.0503	0.220	Mojave Desert Air Quality Management District
Toluene	0.478	lb/1000 gal	0.0270	0.118	0.0270	0.118	Mojave Desert Air Quality Management District
Xylene	0.326	lb/1000 gal	0.0184	0.0808	0.0184	0.0808	Mojave Desert Air Quality Management District
		TOTAL HAP's:	0.868	3.80	0.868	3.80	

Notes:

* - This engine has been derated in accordance to NMED guidance procedure number: AQB 02.002-00

** - Uncontrolled and controlled NOx emission factors based on 40 CFR 60 Subpart JJJJ emission standards as manufacturer uncontrolled emission factors are lower than JJJJ standards.

*** - Uncontrolled emission factor for CO and VOC were taken from the Manufacturer technical data sheets. Controlled emission factor for CO and VOC based on 40 CFR 60 Subpart JJJJ emission standards.

Sample Calculation for NOx

1.00 g/hp-hr * 632 hp / 453.59 g/lb * 8760 hr/yr / 2000 lb/ton = 6.10 tpy

Engine Emission Detail Sheet

Item	Value
Source Name:	ENG-2
Description:	Compressor Engine
QTY:	1 of 1
Make:	Caterpillar
Model:	Caterpillar G-3306TAA
Serial Number:	TBD
Manufacture Date:	After 1/1/2011
Fuel Type:	Natural Gas
Engine Type:	4SRB

Item	Value	Units	Source
Rated Horsepower:	211	hp	Manufacturer
Derated Horsepower:	193*	hp	AQB 02.002-00, *Turbine/Reciprocating Engine Derating*
Heat Rate:	1.67	MMBtu/hr	Calculated
Fuel Consumption:	8622	Btu/hp-hr	Manufacturer
Fuel Heat Value:	1020	btu/scf	Gas Analysis
Emisson Controls:	EMIT Catalyst		Manufacturer
Control Efficiency			
Formaldehyde:	0%		Manufacturer
Control Efficiency NOx:	96%		Manufacturer/JJJJ
Control Efficiency VOC:	0%		Manufacturer/JJJJ
Control Efficiency CO:	0%		Manufacturer/JJJJ
Engine Speed:	1800	RPM	Manufacturer
Potential Operation:	8760	hr/yr	
Elevation:	6826	ft	
Sulfur Content	0.0	grains S/MMscf	Gas Analysis

Potential Emissions

Pollutant	Uncontrolled Emissions				Controlled Emissions				Source of Controlled Emission Factor
	EF	Units	(lb/hr)	(tpy)	EF	Units	(lb/hr)	(tpy)	
NOx	27.52**	g/hp-hr	11.7	51.3	1.00	g/hp-hr	0.426	1.87	40 CFR 60 Subpart JJJJ
VOC (less formaldehyde)	0.70***	g/hp-hr	0.298	1.31	0.70	g/hp-hr	0.298	1.31	40 CFR 60 Subpart JJJJ
CO	2.00***	g/hp-hr	0.852	3.73	2.00	g/hp-hr	0.852	3.73	40 CFR 60 Subpart JJJJ
SO2	0.000588	lb/mmBtu	0.00	0.00	0.000588	lb/mmBtu	0.00	0.00	EPA AP-42 Table 3.2-3
PM10****	0.01941	lb/mmBtu	0.0323	0.142	0.01941	lb/mmBtu	0.0323	0.142	EPA AP-42 Table 3.2-3

HAPs	Uncontrolled Emission Factor	Units	Uncontrolled Emissions		Controlled Emissions		Source of Uncontrolled Emission Factor
	EF	Units	(lb/hr)	(tpy)	(lb/hr)	(tpy)	
Formaldehyde	0.15	g/hp-hr	0.0639	0.280	0.0639	0.280	Manufacturer
Acetaldehyde	0.00279	lb/mmBtu	0.00465	0.0203	0.00465	0.0203	EPA AP-42 Table 3.2-3
Acrolein	0.00263	lb/mmBtu	0.00438	0.0192	0.00438	0.0192	EPA AP-42 Table 3.2-3
Benzene	0.00158	lb/mmBtu	0.00263	0.0115	0.00263	0.0115	EPA AP-42 Table 3.2-3
Ethylbenzene	0.0000248	lb/mmBtu	0.0000413	0.000181	0.0000413	0.000181	EPA AP-42 Table 3.2-3
n-Hexane	N/A	lb/mmBtu	N/A	N/A	N/A	N/A	EPA AP-42 Table 3.2-3
Toluene	0.000558	lb/mmBtu	0.000929	0.00407	0.000929	0.00407	EPA AP-42 Table 3.2-3
Xylene	0.000195	lb/mmBtu	0.000325	0.00142	0.000325	0.00142	EPA AP-42 Table 3.2-3
		TOTAL HAP's:	0.0768	0.336	0.0768	0.336	

Notes:

* - This engine has been derated in accordance to NMED guidance procedure number: AQB 02.002-00

** - Uncontrolled and controlled emission factors for NOx were taken from EMIT control data sheets and 40 CFR 60 Subpart JJJJ respectively.

*** - Uncontrolled and controlled CO and VOC emission factors based on 40 CFR 60 Subpart JJJJ emission standards as manufacturer uncontrolled emission factors are lower than JJJJ standards.

**** - PM10 emissions include filterable and condensable particulates.

Sample Calculation for NOx

1.00 g/hp-hr * 193 hp / 453.59 g/lb * 8760 hr/yr / 2000 lb/ton = 1.87 tpy

Engine Emission Detail Sheet

Item	Value
Source Name:	ENG-2
Description:	Compressor Engine
QTY:	1 of 1
Make:	Caterpillar
Model:	Caterpillar G-3306TAA
Serial Number:	TBD
Manufacture Date:	After 1/1/2011
Fuel Type:	Propane
Engine Type:	4SRB

Item	Value	Units	Source
Rated Horsepower:	211	hp	Manufacturer
Derated Horsepower:	193*	hp	AQB 02.002-00, *Turbine/Reciprocating Engine Derating*
Heat Rate:	1.67	MMBtu/hr	Calculated
Fuel Consumption:	8622	Btu/hp-hr	Manufacturer
Fuel Use	18.40	gal/hr	Calculated
Fuel Heat Value:	0.0905	MMBtu/gal	AP42 Appendix A, page A-6
Emisson Controls:	EMIT Catalyst		Manufacturer
Control Efficiency			
Formaldehyde:	0%		Manufacturer
Control Efficiency NOx:	59%		Manufacturer/JJJJ
Control Efficiency VOC:	89%		Manufacturer/JJJJ
Control Efficiency CO:	13%		Manufacturer/JJJJ
Engine Speed:	1800	RPM	Manufacturer
Potential Operation:	8760	hr/yr	
Elevation:	6826	ft	
Sulfur Content	0.0	grains S/MMscf	Gas Analysis

Potential Emissions

Pollutant	Uncontrolled Emissions				Controlled Emissions				Source of Controlled Emission Factor
	EF**	Units	(lb/hr)	(tpy)	EF***	Units	(lb/hr)	(tpy)	
NOx	139	lb/1000 gal	2.56	11.2	2.45	g/hp-hr	1.04	4.56	40 CFR Part 1048
VOC	83	lb/1000 gal	1.53	6.69	0.39	g/hp-hr	0.164	0.720	40 CFR Part 1048
CO	129	lb/1000 gal	2.37	10.4	4.85	g/hp-hr	2.06	9.04	40 CFR Part 1048
SO2	0.35	lb/1000 gal	0.00	0.00	0.350000	lb/1000 gal	0.00	0.00	Mojave Desert Air Quality Management District
PM10	5.00	lb/1000 gal	0.0920	0.403	5.00000	lb/1000 gal	0.0920	0.403	Mojave Desert Air Quality Management District

HAPs	Uncontrolled Emission Factor	Units	Uncontrolled Emissions		Controlled Emissions		Source of Uncontrolled Emission Factor
	EF	Units	(lb/hr)	(tpy)	(lb/hr)	(tpy)	
Formaldehyde	10.228	lb/1000 gal	0.188	0.824	0.188	0.824	Mojave Desert Air Quality Management
Acetaldehyde	3.291	lb/1000 gal	0.0605	0.265	0.0605	0.265	Mojave Desert Air Quality Management
Acrolein	2.504	lb/1000 gal	0.0461	0.202	0.0461	0.202	Mojave Desert Air Quality Management
Benzene	0.908	lb/1000 gal	0.0167	0.0732	0.0167	0.0732	Mojave Desert Air Quality Management
Ethylbenzene	0.0468	lb/1000 gal	0.000860	0.00377	0.000860	0.00377	Mojave Desert Air Quality Management
n-Hexane	0.888	lb/1000 gal	0.0163	N/A	0.0163	N/A	Mojave Desert Air Quality Management
Toluene	0.478	lb/1000 gal	0.00878	0.0385	0.00878	0.0385	Mojave Desert Air Quality Management
Xylene	0.326	lb/1000 gal	0.00599	0.0262	0.00599	0.0262	Mojave Desert Air Quality Management
		TOTAL HAP's:	0.343	1.43	0.343	1.43	

Notes:

* - This engine has been derated in accordance to NMED guidance procedure number: AQB 02.002-00

** - Uncontrolled emission factors for NOx, VOC, and CO were taken from Mojave Desert Air Quality Management District. VOC emission factor was based on TOG.

*** - Controlled emission factors for NOx, VOC, and CO were taken from 40 CFR Part 1048.

Sample Calculation for NOx

2.45 g/hp-hr * 193 hp / 453.59 g/lb * 8760 hr/yr / 2000 lb/ton = 4.56 tpy

Engine Emission Detail Sheet

Item	Value
Source Name:	ENG-3
Description:	Compressor Engine
QTY:	1 of 1
Make:	Caterpillar
Model:	Caterpillar CG137-8
Serial Number:	TBD
Manufacture Date:	After 1/1/2011
Fuel Type:	Natural Gas
Engine Type:	4SRB

Item	Value	Units	Source
Rated Horsepower:	400	hp	Manufacturer
Derated Horsepower:	366*	hp	AQB 02.002-00, *Turbine/Reciprocating Engine Derating*
Heat Rate:	3.08	MMBtu/hr	Calculated
Fuel Consumption:	8426	Btu/hp-hr	Manufacturer
Fuel Heat Value:	1020	btu/scf	Gas Analysis
Emisson Controls:	Catalyst		Manufacturer
Control Efficiency			
Formaldehyde:	0%		Manufacturer
Control Efficiency NOx:	92%		Manufacturer/JJJJ
Control Efficiency VOC:	0%		Manufacturer/JJJJ
Control Efficiency CO:	84%		Manufacturer/JJJJ
Engine Speed:	1800	RPM	Manufacturer
Potential Operation:	8760	hr/yr	
Elevation:	6826	ft	
Sulfur Content	0.0	grains S/MMscf	Gas Analysis

Potential Emissions

Pollutant	Uncontrolled Emissions				Controlled Emissions				Source of Controlled Emission Factor
	EF	Units	(lb/hr)	(tpy)	EF	Units	(lb/hr)	(tpy)	
NOx	12.37***	g/hp-hr	9.99	43.7	1.00	g/hp-hr	0.807	3.54	40 CFR 60 Subpart JJJJ
VOC (less formaldehyde)	0.70**	g/hp-hr	0.565	2.47	0.70	g/hp-hr	0.565	2.47	40 CFR 60 Subpart JJJJ
CO	12.37***	g/hp-hr	9.99	43.7	2.00	g/hp-hr	1.61	7.07	40 CFR 60 Subpart JJJJ
SO2	0.000588	lb/mmBtu	0.00	0.00	0.000588	lb/mmBtu	0.00	0.00	EPA AP-42 Table 3.2-3
PM10****	0.01941	lb/mmBtu	0.0599	0.262	0.01941	lb/mmBtu	0.0599	0.262	EPA AP-42 Table 3.2-3

HAPs	Uncontrolled Emission Factor	Units	Uncontrolled Emissions		Controlled Emissions		Source of Uncontrolled Emission Factor
	EF	Units	(lb/hr)	(tpy)	(lb/hr)	(tpy)	
Formaldehyde	0.0600	g/hp-hr	0.0484	0.212	0.0484	0.212	Manufacturer
Acetaldehyde	0.00279	lb/mmBtu	0.00861	0.0377	0.00861	0.0377	EPA AP-42 Table 3.2-3
Acrolein	0.00263	lb/mmBtu	0.00811	0.0355	0.00811	0.0355	EPA AP-42 Table 3.2-3
Benzene	0.00158	lb/mmBtu	0.00487	0.0213	0.00487	0.0213	EPA AP-42 Table 3.2-3
Ethylbenzene	0.0000248	lb/mmBtu	0.0000765	0.000335	0.0000765	0.000335	EPA AP-42 Table 3.2-3
n-Hexane	N/A	lb/mmBtu	N/A	N/A	N/A	N/A	EPA AP-42 Table 3.2-3
Toluene	0.000558	lb/mmBtu	0.00172	0.00754	0.00172	0.00754	EPA AP-42 Table 3.2-3
Xylene	0.000195	lb/mmBtu	0.000602	0.00263	0.000602	0.00263	EPA AP-42 Table 3.2-3
		TOTAL HAP's:	0.0724	0.317	0.0724	0.317	

Notes:

* - This engine has been derated in accordance to NMED guidance procedure number: AQB 02.002-00

** - Uncontrolled and controlled VOC emission factors based on 40 CFR 60 Subpart JJJJ emission standards as the manufacturer uncontrolled emission factor is lower than JJJJ standards.

*** - Uncontrolled emission factors for NOx and CO were taken from the Manufacturer technical data sheets. Controlled emission factors for NOx and CO based on 40 CFR 60 Subpart JJJJ emission standards.

**** - PM10 emissions include filterable and condensable particulates.

Sample Calculation for NOx

1.00 g/hp-hr * 366 hp / 453.59 g/lb * 8760 hr/yr / 2000 lb/ton = 3.54 tpy

Engine Emission Detail Sheet

Item	Value
Source Name:	ENG-3
Description:	Compressor Engine
QTY:	1 of 1
Make:	Caterpillar
Model:	Caterpillar CG137-8
Serial Number:	TBD
Manufacture Date:	After 1/1/2011
Fuel Type:	Propane
Engine Type:	4SRB

Item	Value	Units	Source
Rated Horsepower:	400	hp	Manufacturer
Derated Horsepower:	366*	hp	AQB 02.002-00, *Turbine/Reciprocating Engine Derating*
Heat Rate:	3.08	MMBtu/hr	Calculated
Fuel Consumption:	8426	Btu/hp-hr	Manufacturer
Fuel Use	34.08	gal/hr	Calculated
Fuel Heat Value:	0.0905	MMBtu/gal	AP42 Appendix A, page A-6
Emisson Controls:	Catalyst		Manufacturer
Control Efficiency			
Formaldehyde:	0%		Manufacturer
Control Efficiency NOx:	58%		Manufacturer/JJJJ
Control Efficiency VOC:	89%		Manufacturer/JJJJ
Control Efficiency CO:	11%		Manufacturer/JJJJ
Engine Speed:	1800	RPM	Manufacturer
Potential Operation:	8760	hr/yr	
Elevation:	6826	ft	
Sulfur Content	0.0	grains S/MMscf	Gas Analysis

Potential Emissions

Pollutant	Uncontrolled Emissions				Controlled Emissions				Source of Controlled Emission Factor
	EF**	Units	(lb/hr)	(tpy)	EF***	Units	(lb/hr)	(tpy)	
NOx	139	lb/1000 gal	4.74	20.8	2.45	g/hp-hr	1.98	8.65	40 CFR Part 1048
VOC	83.00	lb/1000 gal	2.83	12.4	0.39	g/hp-hr	0.312	1.36	40 CFR Part 1048
CO	129	lb/1000 gal	4.40	19.3	4.85	g/hp-hr	3.91	17.1	40 CFR Part 1048
SO2	0.35	lb/1000 gal	0.00	0.00	0.35	lb/1000 gal	0.00	0.00	Mojave Desert Air Quality Management District
PM10	5.00	lb/1000 gal	0.170	0.746	5.00	lb/1000 gal	0.170	0.746	Mojave Desert Air Quality Management District

HAPs	Uncontrolled Emission Factor	Units	Uncontrolled Emissions		Controlled Emissions		Source of Uncontrolled Emission Factor
	EF	Units	(lb/hr)	(tpy)	(lb/hr)	(tpy)	
Formaldehyde	10.228	lb/1000 gal	0.349	1.53	0.349	1.53	Mojave Desert Air Quality Management District
Acetaldehyde	3.291	lb/1000 gal	0.112	0.491	0.112	0.491	Mojave Desert Air Quality Management District
Acrolein	2.504	lb/1000 gal	0.0853	0.374	0.0853	0.374	Mojave Desert Air Quality Management District
Benzene	0.908	lb/1000 gal	0.0310	0.136	0.0310	0.136	Mojave Desert Air Quality Management District
Ethylbenzene	0.0468	lb/1000 gal	0.00159	0.00698	0.00159	0.00698	Mojave Desert Air Quality Management District
n-Hexane	0.888	lb/1000 gal	0.0303	N/A	0.0303	N/A	Mojave Desert Air Quality Management District
Toluene	0.478	lb/1000 gal	0.0163	0.0713	0.0163	0.0713	Mojave Desert Air Quality Management District
Xylene	0.326	lb/1000 gal	0.0111	0.0486	0.0111	0.0486	Mojave Desert Air Quality Management District
		TOTAL HAP's:	0.636	2.65	0.636	2.65	

Notes:

* - This engine has been derated in accordance to NMED guidance procedure number: AQB 02.002-00

** - Uncontrolled emission factors for NOx, VOC, and CO were taken from Mojave Desert Air Quality Management District. VOC emission factor was based on TOG.

*** - Controlled emission factors for NOx, VOC, and CO were taken from 40 CFR Part 1048.

Sample Calculation for NOx

2.45 g/hp-hr * 366 hp / 453.59 g/lb * 8760 hr/yr / 2000 lb/ton = 8.65 tpy

Engine Emission Detail Sheet

Item	Value
Source Name:	ENG-4
Description:	Compressor Engine
QTY:	1 of 1
Make:	Cummins
Model:	Cummins G8.3C118
Serial Number:	TBD
Manufacture Date:	After 1/1/2011
Fuel Type:	Natural Gas
Engine Type:	4SRB

Item	Value	Units	Source
Rated Horsepower:	118	hp	Manufacturer
Derated Horsepower:	99*	hp	AQB 02.002-00, *Turbine/Reciprocating Engine Derating*
Heat Rate:	0.82	MMBtu/hr	Calculated
Fuel Consumption:	8266	Btu/hp-hr	Manufacturer
Fuel Heat Value:	1020	btu/scf	Gas Analysis
Emisson Controls:	EMIT Catalyst		Manufacturer
Control Efficiency			
Formaldehyde:	0%		Manufacturer
Control Efficiency NOx:	91%		Manufacturer/JJJJ
Control Efficiency VOC:	75%		Manufacturer/JJJJ
Control Efficiency CO:	82%		Manufacturer/JJJJ
Engine Speed:	1800	RPM	Manufacturer
Potential Operation:	8760	hr/yr	
Elevation:	6826	ft	
Sulfur Content	0.0	grains S/MMscf	Gas Analysis

Potential Emissions

Pollutant	Uncontrolled Emissions				Controlled Emissions				Source of Controlled Emission Factor
	EF	Units	(lb/hr)	(tpy)	EF	Units	(lb/hr)	(tpy)	
NOx	11.6**	g/hp-hr	2.54	11.1	1.00	g/hp-hr	0.219	0.958	40 CFR 60 Subpart JJJJ
VOC (less formaldehyde)	2.75**	g/hp-hr	0.601	2.63	0.70	g/hp-hr	0.153	0.670	40 CFR 60 Subpart JJJJ
CO	11.0**	g/hp-hr	2.40	10.5	2.00	g/hp-hr	0.437	1.92	40 CFR 60 Subpart JJJJ
SO2	0.000588	lb/mmBtu	0.00	0.00	0.000588	lb/mmBtu	0.00	0.00	EPA AP-42 Table 3.2-3
PM10***	0.01941	lb/mmBtu	0.0159	0.0697	0.01941	lb/mmBtu	0.0159	0.0697	EPA AP-42 Table 3.2-3

HAPs	Uncontrolled Emission Factor	Units	Uncontrolled Emissions		Controlled Emissions		Source of Uncontrolled Emission Factor
	EF	Units	(lb/hr)	(tpy)	(lb/hr)	(tpy)	
Formaldehyde	0.0205	lb/mmBtu	0.0168	0.0736	0.0168	0.0736	EPA AP-42 Table 3.2-3
Acetaldehyde	0.00279	lb/mmBtu	0.00229	0.0100	0.00229	0.0100	EPA AP-42 Table 3.2-3
Acrolein	0.00263	lb/mmBtu	0.00216	0.00944	0.00216	0.00944	EPA AP-42 Table 3.2-3
Benzene	0.00158	lb/mmBtu	0.00129	0.00567	0.00129	0.00567	EPA AP-42 Table 3.2-3
Ethylbenzene	0.0000248	lb/mmBtu	0.0000203	0.0000890	0.0000203	0.0000890	EPA AP-42 Table 3.2-3
n-Hexane	N/A	lb/mmBtu	N/A	N/A	N/A	N/A	EPA AP-42 Table 3.2-3
Toluene	0.000558	lb/mmBtu	0.000457	0.00200	0.000457	0.00200	EPA AP-42 Table 3.2-3
Xylene	0.000195	lb/mmBtu	0.000160	0.000700	0.000160	0.000700	EPA AP-42 Table 3.2-3
		TOTAL HAP's:	0.0232	0.102	0.0232	0.102	

Notes:

* - This engine has been derated in accordance to NMED guidance procedure number: AQB 02.002-00

** - Uncontrolled and controlled emission factors for NOx, VOC, and CO were taken from EMIT control data sheets and 40 CFR 60 Subpart JJJJ respectively.

*** - PM10 emissions include filterable and condensable particulates.

Sample Calculation for NOx

1.00 g/hp-hr * 99 hp / 453.59 g/lb * 8760 hr/yr / 2000 lb/ton = 0.96 tpy

Engine Emission Detail Sheet

Item	Value
Source Name:	ENG-4
Description:	Compressor Engine
QTY:	1 of 1
Make:	Cummins
Model:	Cummins G8.3C118
Serial Number:	TBD
Manufacture Date:	After 1/1/2011
Fuel Type:	Propane
Engine Type:	4SRB

Item	Value	Units	Source
Rated Horsepower:	118	hp	Manufacturer
Derated Horsepower:	99*	hp	AQB 02.002-00, *Turbine/Reciprocating Engine Derating*
Heat Rate:	0.82	MMBtu/hr	Calculated
Fuel Consumption:	8266	Btu/hp-hr	Manufacturer
Fuel Use	9.06	gal/hr	Calculated
Fuel Heat Value:	0.0905	MMBtu/gal	AP42 Appendix A, page A-6
Emisson Controls:	EMIT Catalyst		Manufacturer
Control Efficiency			
Formaldehyde:	0%		Manufacturer
Control Efficiency NOx:	57%		Manufacturer/JJJJ
Control Efficiency VOC:	72%		Manufacturer/JJJJ
Control Efficiency CO:	9%		Manufacturer/JJJJ
Engine Speed:	1800	RPM	Manufacturer
Potential Operation:	8760	hr/yr	
Elevation:	6826	ft	
Sulfur Content	0.0	grains S/MMscf	Gas Analysis

Potential Emissions

Pollutant	Uncontrolled Emissions				Controlled Emissions				Source of Controlled Emission Factor
	EF**	Units	(lb/hr)	(tpy)	EF***	Units	(lb/hr)	(tpy)	
NOx	139	lb/1000 gal	1.26	5.51	2.45	g/hp-hr	0.535	2.34	40 CFR Part 1048
VOC	83	lb/1000 gal	0.752	3.29	0.39	g/hp-hr	0.207	0.906	40 CFR Part 1048
CO	129	lb/1000 gal	1.17	5.12	4.85	g/hp-hr	1.06	4.64	40 CFR Part 1048
SO2	0.35	lb/1000 gal	0.00	0.0000	0.35	lb/1000 gal	0.00	0.00	Mojave Desert Air Quality Management District
PM10	5.00	lb/1000 gal	0.0453	0.198	5.00	lb/1000 gal	0.0453	0.198	Mojave Desert Air Quality Management District

HAPs	Uncontrolled Emission Factor	Units	Uncontrolled Emissions		Controlled Emissions		Source of Uncontrolled Emission Factor
	EF	Units	(lb/hr)	(tpy)	(lb/hr)	(tpy)	
Formaldehyde	10.228	lb/1000 gal	0.0926	0.406	0.0926	0.406	Mojave Desert Air Quality Management
Acetaldehyde	3.291	lb/1000 gal	0.0298	0.131	0.0298	0.131	Mojave Desert Air Quality Management
Acrolein	2.504	lb/1000 gal	0.0227	0.0993	0.0227	0.0993	Mojave Desert Air Quality Management
Benzene	0.908	lb/1000 gal	0.00822	0.0360	0.00822	0.0360	Mojave Desert Air Quality Management
Ethylbenzene	0.0468	lb/1000 gal	0.000423	0.00185	0.000423	0.00185	Mojave Desert Air Quality Management
n-Hexane	0.888	lb/1000 gal	0.00804	N/A	0.00804	N/A	Mojave Desert Air Quality Management
Toluene	0.478	lb/1000 gal	0.00432	0.0189	0.00432	0.0189	Mojave Desert Air Quality Management
Xylene	0.326	lb/1000 gal	0.00295	0.0129	0.00295	0.0129	Mojave Desert Air Quality Management
		TOTAL HAP's:	0.169	0.705	0.169	0.705	

Notes:

* - This engine has been derated in accordance to NMED guidance procedure number: AQB 02.002-00

** - Uncontrolled emission factors for NOx, VOC, and CO were taken from Mojave Desert Air Quality Management District. VOC emission factor was based on TOG.

*** - Controlled emission factors for NOx, VOC, and CO were taken from 40 CFR Part 1048.

Sample Calculation for NOx

2.45 g/hp-hr * 99 hp / 453.59 g/lb * 8760 hr/yr / 2000 lb/ton = 2.34 tpy

Tank Detail Sheet

Area	Chaco Slope	Tank Height	30	ft
Equipment Source Name	VRT-1	Oil Flash Factor	18.2181	ft^3/bbl
Number of Tanks	1 of 2	Std Volume	379	scf/lb-mol
Tank Capacity	750 bbl (each)	Potential Operation	8760	hr/yr
Tank Contents	Vapor Recovery Tank	Potential PW Throughput	365000	bbl/yr
VRU 1 Product Recovery Efficiency	95%	Potential Oil from PW Throughput	18250	bbl/yr
VRU 2 Product Recovery Efficiency	60%	Potential Oil Throughput	675250	bbl/yr
VRU 3 Product Recovery Efficiency	60%	Total Throughput (E&P Tanks)	1900	bbl/day
Composite VRU Operation	99.20%	Calendar Year	2017	

Potential Emissions - Oil

Pollutant	Potential Throughput (bbl/d)	Max Battery Potential Emissions				Source of Emission Factor
		Uncontrolled		Controlled		
		(lb/hr)	(ton/yr)	(lb/hr)	(ton/yr)	
VOC	1900	166.4	728.6	1.33	5.83	E&P Tanks v3.0
Benzene	1900	0.214	0.939	0.00172	0.00751	E&P Tanks v3.0
Toluene	1900	0.203	0.889	0.00162	0.00711	E&P Tanks v3.0
Ethylbenzene	1900	0.0244	0.107	0.000195	0.000856	E&P Tanks v3.0
Xylenes	1900	0.0916	0.401	0.000732	0.00321	E&P Tanks v3.0
n-Hexane	1900	2.15	9.44	0.0172	0.0755	E&P Tanks v3.0
Total HAPs		2.69	11.8	0.0215	0.0942	

1 - Uncontrolled emissions were taken directly from the E&P Tanks v3.0 output. Grand Junction, CO was used for meteorological data in E&P Tanks simulation instead of Albuquerque, NM because its elevation and climate are more similar to the well site location.

2 - Reduced working/breathing and flash losses are calculated from the pre-VRU working/breathing and flash losses assuming the VRU's operate at 100% collection efficiency and worst case uptimes of 95% for the primary VRU and 60% for the secondary and tertiary VRU's to be conservative.

3 - Potential oil from produced water throughput based on the assumption that 5% of produced water throughput is oil.

4 - This vapor recovery tank is a process vessel rather than a storage vessel per the definition in §60.5430a and is therefore not subject to the requirements of NSPS 40 CFR 60 Subpart OOOOa.

Tank Detail Sheet

Area	Chaco Slope	Tank Height	30 ft
Equipment Source Name	VRT-2	Oil Flash Factor	18.2181 ft^3/bbl
Number of Tanks	2 of 2	Std Volume	379 scf/lb-mol
Tank Capacity	750 bbl (each)	Potential Operation	8760 hr/yr
Tank Contents	Vapor Recovery Tank	Potential PW Throughput	365000 bbl/yr
VRU 1 Product Recovery Efficiency	95%	Potential Oil from PW Throughput	18250 bbl/yr
VRU 2 Product Recovery Efficiency	60%	Potential Oil Throughput	675250 bbl/yr
VRU 3 Product Recovery Efficiency	60%	Total Throughput (E&P Tanks)	1900 bbl/day
Composite VRU Operation	99.20%	Calendar Year	2017

Potential Emissions - Oil

Pollutant	Potential Throughput (bbl/d)	Max Battery Potential Emissions				Source of Emission Factor
		Uncontrolled		Controlled		
		(lb/hr)	(ton/yr)	(lb/hr)	(ton/yr)	
VOC	1900	166.4	728.6	1.33	5.83	E&P Tanks v3.0
Benzene	1900	0.214	0.939	0.00172	0.00751	E&P Tanks v3.0
Toluene	1900	0.203	0.889	0.00162	0.00711	E&P Tanks v3.0
Ethylbenzene	1900	0.0244	0.107	0.000195	0.000856	E&P Tanks v3.0
Xylenes	1900	0.0916	0.401	0.000732	0.00321	E&P Tanks v3.0
n-Hexane	1900	2.15	9.44	0.0172	0.0755	E&P Tanks v3.0
Total HAPs		2.69	11.8	0.0215	0.0942	

1 - Uncontrolled emissions were taken directly from the E&P Tanks v3.0 output. Grand Junction, CO was used for meteorological data in E&P Tanks simulation instead of Albuquerque, NM because its elevation and climate are more similar to the well site location.

2 - Reduced working/breathing and flash losses are calculated from the pre-VRU working/breathing and flash losses assuming the VRU's operate at 100% collection efficiency and worst case uptimes of 95% for the primary VRU and 60% for the secondary and tertiary VRU's to be conservative.

3 - Potential oil from produced water throughput based on the assumption that 5% of produced water throughput is oil.

4 - This vapor recovery tank is a process vessel rather than a storage vessel per the definition in §60.5430a and is therefore not subject to the requirements of NSPS 40 CFR 60 Subpart OOOOa.

Tank Detail Sheet

Area	Chaco Slope	Tank Height	20 ft
Equipment Source Name	TK-1	Potential Operation	8760 hr/yr
Number of Tanks	1 of 15	Potential Throughput	92467 bbl/yr
Tank Capacity	500 bbl (each)	Calendar Year	2017
Tank Contents	Post-Flash Oil Tank		
VRU 1 Product Recovery Efficiency	95%		

Potential Emissions

Pollutant	Potential Throughput (bbl/yr)	Max Battery Potential Emissions				Source of Emission Factor
		Uncontrolled		Controlled		
		(lb/hr)	(ton/yr)	(lb/hr)	(ton/yr)	
VOC	92467	0.696	3.05	0.0348	0.152	EPA TANKS 4.0.9d
Benzene	92467	0.00102	0.00448	0.0000511	0.000224	Engineering Calculation
Toluene	92467	0.000931	0.00408	0.0000466	0.000204	Engineering Calculation
Ethylbenzene	92467	0.0000947	0.000415	0.00000473	0.0000207	Engineering Calculation
Xylenes	92467	0.000347	0.00152	0.0000174	0.0000760	Engineering Calculation
n-Hexane	92467	0.0160	0.0701	0.000801	0.00351	Engineering Calculation
Total HAPs		0.0184	0.0806	0.000920	0.00403	

1 - Uncontrolled emissions were taken directly from the EPA TANKS 4.0.9d output.

2 - No HAP emissions are reported by EPA Tanks 4.0.9d; therefore, these emissions were estimated based on the ration of HAPs to total VOCs using a representative liquid sample.

3 - Reduced working/breathing and flash losses are calculated from the pre-VRU working/breathing and flash losses assuming the VRU operates at 100% collection efficiency per TCEQ guidance (See the cover letter) but at a worst-case 95% of the time, in accordance with NSPS OOOOa 60.5412(a), resulting in a net 95% product recovery efficiency.

Tank Detail Sheet

Area	Chaco Slope	Tank Height	20 ft
Equipment Source Name	TK-2	Potential Operation	8760 hr/yr
Number of Tanks	2 of 15	Potential Throughput	92467 bbl/yr
Tank Capacity	500 bbl (each)	Calendar Year	2017
Tank Contents	Post-Flash Oil Tank		
VRU 1 Product Recovery Efficiency	95%		

Potential Emissions

Pollutant	Potential Throughput (bbl/yr)	Max Battery Potential Emissions				Source of Emission Factor
		Uncontrolled		Controlled		
		(lb/hr)	(ton/yr)	(lb/hr)	(ton/yr)	
VOC	92467	0.696	3.05	0.0348	0.152	EPA TANKS 4.0.9d
Benzene	92467	0.00102	0.00448	0.0000511	0.000224	Engineering Calculation
Toluene	92467	0.000931	0.00408	0.0000466	0.000204	Engineering Calculation
Ethylbenzene	92467	0.0000947	0.000415	0.00000473	0.0000207	Engineering Calculation
Xylenes	92467	0.000347	0.00152	0.0000174	0.0000760	Engineering Calculation
n-Hexane	92467	0.0160	0.0701	0.000801	0.00351	Engineering Calculation
Total HAPs		0.0184	0.0806	0.000920	0.00403	

1 - Uncontrolled emissions were taken directly from the EPA TANKS 4.0.9d output.

2 - No HAP emissions are reported by EPA Tanks 4.0.9d; therefore, these emissions were estimated based on the ration of HAPs to total VOCs using a representative liquid sample.

3 - Reduced working/breathing and flash losses are calculated from the pre-VRU working/breathing and flash losses assuming the VRU operates at 100% collection efficiency per TCEQ guidance (See the cover letter) but at a worst-case 95% of the time, in accordance with NSPS OOOOa 60.5412(a), resulting in a net 95% product recovery efficiency.

Tank Detail Sheet

Area	Chaco Slope	Tank Height	20 ft
Equipment Source Name	TK-3	Potential Operation	8760 hr/yr
Number of Tanks	3 of 15	Potential Throughput	92467 bbl/yr
Tank Capacity	500 bbl (each)	Calendar Year	2017
Tank Contents	Post-Flash Oil Tank		
VRU 1 Product Recovery Efficiency	95%		

Potential Emissions

Pollutant	Potential Throughput (bbl/yr)	Max Battery Potential Emissions				Source of Emission Factor
		Uncontrolled		Controlled		
		(lb/hr)	(ton/yr)	(lb/hr)	(ton/yr)	
VOC	92467	0.696	3.05	0.0348	0.152	EPA TANKS 4.0.9d
Benzene	92467	0.00102	0.00448	0.0000511	0.000224	Engineering Calculation
Toluene	92467	0.000931	0.00408	0.0000466	0.000204	Engineering Calculation
Ethylbenzene	92467	0.0000947	0.000415	0.00000473	0.0000207	Engineering Calculation
Xylenes	92467	0.000347	0.00152	0.0000174	0.0000760	Engineering Calculation
n-Hexane	92467	0.0160	0.0701	0.000801	0.00351	Engineering Calculation
Total HAPs		0.0184	0.0806	0.000920	0.00403	

1 - Uncontrolled emissions were taken directly from the EPA TANKS 4.0.9d output.

2 - No HAP emissions are reported by EPA Tanks 4.0.9d; therefore, these emissions were estimated based on the ration of HAPs to total VOCs using a representative liquid sample.

3 - Reduced working/breathing and flash losses are calculated from the pre-VRU working/breathing and flash losses assuming the VRU operates at 100% collection efficiency per TCEQ guidance (See the cover letter) but at a worst-case 95% of the time, in accordance with NSPS OOOOa 60.5412(a), resulting in a net 95% product recovery efficiency.

Tank Detail Sheet

Area	Chaco Slope	Tank Height	20 ft
Equipment Source Name	TK-4	Potential Operation	8760 hr/yr
Number of Tanks	4 of 15	Potential Throughput	92467 bbl/yr
Tank Capacity	500 bbl (each)	Calendar Year	2017
Tank Contents	Post-Flash Oil Tank		
VRU 1 Product Recovery Efficiency	95%		

Potential Emissions

Pollutant	Potential Throughput (bbl/yr)	Max Battery Potential Emissions				Source of Emission Factor
		Uncontrolled		Controlled		
		(lb/hr)	(ton/yr)	(lb/hr)	(ton/yr)	
VOC	92467	0.696	3.05	0.0348	0.152	EPA TANKS 4.0.9d
Benzene	92467	0.00102	0.00448	0.0000511	0.000224	Engineering Calculation
Toluene	92467	0.000931	0.00408	0.0000466	0.000204	Engineering Calculation
Ethylbenzene	92467	0.0000947	0.000415	0.00000473	0.0000207	Engineering Calculation
Xylenes	92467	0.000347	0.00152	0.0000174	0.0000760	Engineering Calculation
n-Hexane	92467	0.0160	0.0701	0.000801	0.00351	Engineering Calculation
Total HAPs		0.0184	0.0806	0.000920	0.00403	

1 - Uncontrolled emissions were taken directly from the EPA TANKS 4.0.9d output.

2 - No HAP emissions are reported by EPA Tanks 4.0.9d; therefore, these emissions were estimated based on the ration of HAPs to total VOCs using a representative liquid sample.

3 - Reduced working/breathing and flash losses are calculated from the pre-VRU working/breathing and flash losses assuming the VRU operates at 100% collection efficiency per TCEQ guidance (See the cover letter) but at a worst-case 95% of the time, in accordance with NSPS OOOOa 60.5412(a), resulting in a net 95% product recovery efficiency.

Tank Detail Sheet

Area	Chaco Slope	Tank Height	20 ft
Equipment Source Name	TK-5	Potential Operation	8760 hr/yr
Number of Tanks	5 of 15	Potential Throughput	92467 bbl/yr
Tank Capacity	500 bbl (each)	Calendar Year	2017
Tank Contents	Post-Flash Oil Tank		
VRU 1 Product Recovery Efficiency	95%		

Potential Emissions

Pollutant	Potential Throughput (bbl/yr)	Max Battery Potential Emissions				Source of Emission Factor
		Uncontrolled		Controlled		
		(lb/hr)	(ton/yr)	(lb/hr)	(ton/yr)	
VOC	92467	0.696	3.05	0.0348	0.152	EPA TANKS 4.0.9d
Benzene	92467	0.00102	0.00448	0.0000511	0.000224	Engineering Calculation
Toluene	92467	0.000931	0.00408	0.0000466	0.000204	Engineering Calculation
Ethylbenzene	92467	0.0000947	0.000415	0.00000473	0.0000207	Engineering Calculation
Xylenes	92467	0.000347	0.00152	0.0000174	0.0000760	Engineering Calculation
n-Hexane	92467	0.0160	0.0701	0.000801	0.00351	Engineering Calculation
Total HAPs		0.0184	0.0806	0.000920	0.00403	

1 - Uncontrolled emissions were taken directly from the EPA TANKS 4.0.9d output.

2 - No HAP emissions are reported by EPA Tanks 4.0.9d; therefore, these emissions were estimated based on the ration of HAPs to total VOCs using a representative liquid sample.

3 - Reduced working/breathing and flash losses are calculated from the pre-VRU working/breathing and flash losses assuming the VRU operates at 100% collection efficiency per TCEQ guidance (See the cover letter) but at a worst-case 95% of the time, in accordance with NSPS OOOOa 60.5412(a), resulting in a net 95% product recovery efficiency.

Tank Detail Sheet

Area	Chaco Slope	Tank Height	20 ft
Equipment Source Name	TK-6	Potential Operation	8760 hr/yr
Number of Tanks	6 of 15	Potential Throughput	92467 bbl/yr
Tank Capacity	500 bbl (each)	Calendar Year	2017
Tank Contents	Post-Flash Oil Tank		
VRU 1 Product Recovery Efficiency	95%		

Potential Emissions

Pollutant	Potential Throughput (bbl/yr)	Max Battery Potential Emissions				Source of Emission Factor
		Uncontrolled		Controlled		
		(lb/hr)	(ton/yr)	(lb/hr)	(ton/yr)	
VOC	92467	0.696	3.05	0.0348	0.152	EPA TANKS 4.0.9d
Benzene	92467	0.00102	0.00448	0.0000511	0.000224	Engineering Calculation
Toluene	92467	0.000931	0.00408	0.0000466	0.000204	Engineering Calculation
Ethylbenzene	92467	0.0000947	0.000415	0.00000473	0.0000207	Engineering Calculation
Xylenes	92467	0.000347	0.00152	0.0000174	0.0000760	Engineering Calculation
n-Hexane	92467	0.0160	0.0701	0.000801	0.00351	Engineering Calculation
Total HAPs		0.0184	0.0806	0.000920	0.00403	

1 - Uncontrolled emissions were taken directly from the EPA TANKS 4.0.9d output.

2 - No HAP emissions are reported by EPA Tanks 4.0.9d; therefore, these emissions were estimated based on the ration of HAPs to total VOCs using a representative liquid sample.

3 - Reduced working/breathing and flash losses are calculated from the pre-VRU working/breathing and flash losses assuming the VRU operates at 100% collection efficiency per TCEQ guidance (See the cover letter) but at a worst-case 95% of the time, in accordance with NSPS OOOOa 60.5412(a), resulting in a net 95% product recovery efficiency.

Tank Detail Sheet

Area	Chaco Slope	Tank Height	20 ft
Equipment Source Name	TK-7	Potential Operation	8760 hr/yr
Number of Tanks	7 of 15	Potential Throughput	92467 bbl/yr
Tank Capacity	500 bbl (each)	Calendar Year	2017
Tank Contents	Post-Flash Oil Tank		
VRU 1 Product Recovery Efficiency	95%		

Potential Emissions

Pollutant	Potential Throughput (bbl/yr)	Max Battery Potential Emissions				Source of Emission Factor
		Uncontrolled		Controlled		
		(lb/hr)	(ton/yr)	(lb/hr)	(ton/yr)	
VOC	92467	0.696	3.05	0.0348	0.152	EPA TANKS 4.0.9d
Benzene	92467	0.00102	0.00448	0.0000511	0.000224	Engineering Calculation
Toluene	92467	0.000931	0.00408	0.0000466	0.000204	Engineering Calculation
Ethylbenzene	92467	0.0000947	0.000415	0.00000473	0.0000207	Engineering Calculation
Xylenes	92467	0.000347	0.00152	0.0000174	0.0000760	Engineering Calculation
n-Hexane	92467	0.0160	0.0701	0.000801	0.00351	Engineering Calculation
Total HAPs		0.0184	0.0806	0.000920	0.00403	

1 - Uncontrolled emissions were taken directly from the EPA TANKS 4.0.9d output.

2 - No HAP emissions are reported by EPA Tanks 4.0.9d; therefore, these emissions were estimated based on the ration of HAPs to total VOCs using a representative liquid sample.

3 - Reduced working/breathing and flash losses are calculated from the pre-VRU working/breathing and flash losses assuming the VRU operates at 100% collection efficiency per TCEQ guidance (See the cover letter) but at a worst-case 95% of the time, in accordance with NSPS OOOOa 60.5412(a), resulting in a net 95% product recovery efficiency.

Tank Detail Sheet

Area	Chaco Slope	Tank Height	20 ft
Equipment Source Name	TK-8	Potential Operation	8760 hr/yr
Number of Tanks	8 of 15	Potential Throughput	92467 bbl/yr
Tank Capacity	500 bbl (each)	Calendar Year	2017
Tank Contents	Post-Flash Oil Tank		
VRU 1 Product Recovery Efficiency	95%		

Potential Emissions

Pollutant	Potential Throughput (bbl/yr)	Max Battery Potential Emissions				Source of Emission Factor
		Uncontrolled		Controlled		
		(lb/hr)	(ton/yr)	(lb/hr)	(ton/yr)	
VOC	92467	0.696	3.05	0.0348	0.152	EPA TANKS 4.0.9d
Benzene	92467	0.00102	0.00448	0.0000511	0.000224	Engineering Calculation
Toluene	92467	0.000931	0.00408	0.0000466	0.000204	Engineering Calculation
Ethylbenzene	92467	0.0000947	0.000415	0.00000473	0.0000207	Engineering Calculation
Xylenes	92467	0.000347	0.00152	0.0000174	0.0000760	Engineering Calculation
n-Hexane	92467	0.0160	0.0701	0.000801	0.00351	Engineering Calculation
Total HAPs		0.0184	0.0806	0.000920	0.00403	

1 - Uncontrolled emissions were taken directly from the EPA TANKS 4.0.9d output.

2 - No HAP emissions are reported by EPA Tanks 4.0.9d; therefore, these emissions were estimated based on the ration of HAPs to total VOCs using a representative liquid sample.

3 - Reduced working/breathing and flash losses are calculated from the pre-VRU working/breathing and flash losses assuming the VRU operates at 100% collection efficiency per TCEQ guidance (See the cover letter) but at a worst-case 95% of the time, in accordance with NSPS OOOOa 60.5412(a), resulting in a net 95% product recovery efficiency.

Tank Detail Sheet

Area	Chaco Slope	Tank Height	20 ft
Equipment Source Name	TK-9	Potential Operation	8760 hr/yr
Number of Tanks	9 of 15	Potential Throughput	92467 bbl/yr
Tank Capacity	500 bbl (each)	Calendar Year	2017
Tank Contents	Post-Flash Oil Tank		
VRU 1 Product Recovery Efficiency	95%		

Potential Emissions

Pollutant	Potential Throughput (bbl/yr)	Max Battery Potential Emissions				Source of Emission Factor
		Uncontrolled		Controlled		
		(lb/hr)	(ton/yr)	(lb/hr)	(ton/yr)	
VOC	92467	0.696	3.05	0.0348	0.152	EPA TANKS 4.0.9d
Benzene	92467	0.00102	0.00448	0.0000511	0.000224	Engineering Calculation
Toluene	92467	0.000931	0.00408	0.0000466	0.000204	Engineering Calculation
Ethylbenzene	92467	0.0000947	0.000415	0.00000473	0.0000207	Engineering Calculation
Xylenes	92467	0.000347	0.00152	0.0000174	0.0000760	Engineering Calculation
n-Hexane	92467	0.0160	0.0701	0.000801	0.00351	Engineering Calculation
Total HAPs		0.0184	0.0806	0.000920	0.00403	

1 - Uncontrolled emissions were taken directly from the EPA TANKS 4.0.9d output.

2 - No HAP emissions are reported by EPA Tanks 4.0.9d; therefore, these emissions were estimated based on the ration of HAPs to total VOCs using a representative liquid sample.

3 - Reduced working/breathing and flash losses are calculated from the pre-VRU working/breathing and flash losses assuming the VRU operates at 100% collection efficiency per TCEQ guidance (See the cover letter) but at a worst-case 95% of the time, in accordance with NSPS OOOOa 60.5412(a), resulting in a net 95% product recovery efficiency.

Tank Detail Sheet

Area	Chaco Slope	Tank Height	20 ft
Equipment Source Name	TK-10	Potential Operation	8760 hr/yr
Number of Tanks	10 of 15	Potential Throughput	92467 bbl/yr
Tank Capacity	500 bbl (each)	Calendar Year	2017
Tank Contents	Post-Flash Oil Tank		
VRU 1 Product Recovery Efficiency	95%		

Potential Emissions

Pollutant	Potential Throughput (bbl/yr)	Max Battery Potential Emissions				Source of Emission Factor
		Uncontrolled		Controlled		
		(lb/hr)	(ton/yr)	(lb/hr)	(ton/yr)	
VOC	92467	0.696	3.05	0.0348	0.152	EPA TANKS 4.0.9d
Benzene	92467	0.00102	0.00448	0.0000511	0.000224	Engineering Calculation
Toluene	92467	0.000931	0.00408	0.0000466	0.000204	Engineering Calculation
Ethylbenzene	92467	0.0000947	0.000415	0.00000473	0.0000207	Engineering Calculation
Xylenes	92467	0.000347	0.00152	0.0000174	0.0000760	Engineering Calculation
n-Hexane	92467	0.0160	0.0701	0.000801	0.00351	Engineering Calculation
Total HAPs		0.0184	0.0806	0.000920	0.00403	

1 - Uncontrolled emissions were taken directly from the EPA TANKS 4.0.9d output.

2 - No HAP emissions are reported by EPA Tanks 4.0.9d; therefore, these emissions were estimated based on the ration of HAPs to total VOCs using a representative liquid sample.

3 - Reduced working/breathing and flash losses are calculated from the pre-VRU working/breathing and flash losses assuming the VRU operates at 100% collection efficiency per TCEQ guidance (See the cover letter) but at a worst-case 95% of the time, in accordance with NSPS OOOOa 60.5412(a), resulting in a net 95% product recovery efficiency.

Tank Detail Sheet

Area	Chaco Slope	Tank Height	20 ft
Equipment Source Name	TK-11	Potential Operation	8760 hr/yr
Number of Tanks	11 of 15	Potential Throughput	92467 bbl/yr
Tank Capacity	500 bbl (each)	Calendar Year	2017
Tank Contents	Post-Flash Oil Tank		
VRU 1 Product Recovery Efficiency	95%		

Potential Emissions

Pollutant	Potential Throughput (bbl/yr)	Max Battery Potential Emissions				Source of Emission Factor
		Uncontrolled		Controlled		
		(lb/hr)	(ton/yr)	(lb/hr)	(ton/yr)	
VOC	92467	0.696	3.05	0.0348	0.152	EPA TANKS 4.0.9d
Benzene	92467	0.00102	0.00448	0.0000511	0.000224	Engineering Calculation
Toluene	92467	0.000931	0.00408	0.0000466	0.000204	Engineering Calculation
Ethylbenzene	92467	0.0000947	0.000415	0.00000473	0.0000207	Engineering Calculation
Xylenes	92467	0.000347	0.00152	0.0000174	0.0000760	Engineering Calculation
n-Hexane	92467	0.0160	0.0701	0.000801	0.00351	Engineering Calculation
Total HAPs		0.0184	0.0806	0.000920	0.00403	

1 - Uncontrolled emissions were taken directly from the EPA TANKS 4.0.9d output.

2 - No HAP emissions are reported by EPA Tanks 4.0.9d; therefore, these emissions were estimated based on the ration of HAPs to total VOCs using a representative liquid sample.

3 - Reduced working/breathing and flash losses are calculated from the pre-VRU working/breathing and flash losses assuming the VRU operates at 100% collection efficiency per TCEQ guidance (See the cover letter) but at a worst-case 95% of the time, in accordance with NSPS OOOOa 60.5412(a), resulting in a net 95% product recovery efficiency.

Tank Detail Sheet

Area	Chaco Slope	Tank Height	20 ft
Equipment Source Name	TK-12	Potential Operation	8760 hr/yr
Number of Tanks	12 of 15	Potential Throughput	92467 bbl/yr
Tank Capacity	500 bbl (each)	Calendar Year	2017
Tank Contents	Post-Flash Oil Tank		
VRU 1 Product Recovery Efficiency	95%		

Potential Emissions

Pollutant	Potential Throughput (bbl/yr)	Max Battery Potential Emissions				Source of Emission Factor
		Uncontrolled		Controlled		
		(lb/hr)	(ton/yr)	(lb/hr)	(ton/yr)	
VOC	92467	0.696	3.05	0.0348	0.152	EPA TANKS 4.0.9d
Benzene	92467	0.00102	0.00448	0.0000511	0.000224	Engineering Calculation
Toluene	92467	0.000931	0.00408	0.0000466	0.000204	Engineering Calculation
Ethylbenzene	92467	0.0000947	0.000415	0.00000473	0.0000207	Engineering Calculation
Xylenes	92467	0.000347	0.00152	0.0000174	0.0000760	Engineering Calculation
n-Hexane	92467	0.0160	0.0701	0.000801	0.00351	Engineering Calculation
Total HAPs		0.0184	0.0806	0.000920	0.00403	

1 - Uncontrolled emissions were taken directly from the EPA TANKS 4.0.9d output.

2 - No HAP emissions are reported by EPA Tanks 4.0.9d; therefore, these emissions were estimated based on the ration of HAPs to total VOCs using a representative liquid sample.

3 - Reduced working/breathing and flash losses are calculated from the pre-VRU working/breathing and flash losses assuming the VRU operates at 100% collection efficiency per TCEQ guidance (See the cover letter) but at a worst-case 95% of the time, in accordance with NSPS OOOOa 60.5412(a), resulting in a net 95% product recovery efficiency.

Tank Detail Sheet

Area	Chaco Slope	Tank Height	20 ft
Equipment Source Name	TK-13	Potential Operation	8760 hr/yr
Number of Tanks	13 of 15	Potential Throughput	92467 bbl/yr
Tank Capacity	500 bbl (each)	Calendar Year	2017
Tank Contents	Post-Flash Oil Tank		
VRU 1 Product Recovery Efficiency	95%		

Potential Emissions

Pollutant	Potential Throughput (bbl/yr)	Max Battery Potential Emissions				Source of Emission Factor
		Uncontrolled		Controlled		
		(lb/hr)	(ton/yr)	(lb/hr)	(ton/yr)	
VOC	92467	0.696	3.05	0.0348	0.152	EPA TANKS 4.0.9d
Benzene	92467	0.00102	0.00448	0.0000511	0.000224	Engineering Calculation
Toluene	92467	0.000931	0.00408	0.0000466	0.000204	Engineering Calculation
Ethylbenzene	92467	0.0000947	0.000415	0.00000473	0.0000207	Engineering Calculation
Xylenes	92467	0.000347	0.00152	0.0000174	0.0000760	Engineering Calculation
n-Hexane	92467	0.0160	0.0701	0.000801	0.00351	Engineering Calculation
Total HAPs		0.0184	0.0806	0.000920	0.00403	

1 - Uncontrolled emissions were taken directly from the EPA TANKS 4.0.9d output.

2 - No HAP emissions are reported by EPA Tanks 4.0.9d; therefore, these emissions were estimated based on the ration of HAPs to total VOCs using a representative liquid sample.

3 - Reduced working/breathing and flash losses are calculated from the pre-VRU working/breathing and flash losses assuming the VRU operates at 100% collection efficiency per TCEQ guidance (See the cover letter) but at a worst-case 95% of the time, in accordance with NSPS OOOOa 60.5412(a), resulting in a net 95% product recovery efficiency.

Tank Detail Sheet

Area	Chaco Slope	Tank Height	20 ft
Equipment Source Name	TK-14	Potential Operation	8760 hr/yr
Number of Tanks	14 of 15	Potential Throughput	92467 bbl/yr
Tank Capacity	500 bbl (each)	Calendar Year	2017
Tank Contents	Post-Flash Oil Tank		
VRU 1 Product Recovery Efficiency	95%		

Potential Emissions

Pollutant	Potential Throughput (bbl/yr)	Max Battery Potential Emissions				Source of Emission Factor
		Uncontrolled		Controlled		
		(lb/hr)	(ton/yr)	(lb/hr)	(ton/yr)	
VOC	92467	0.696	3.05	0.0348	0.152	EPA TANKS 4.0.9d
Benzene	92467	0.00102	0.00448	0.0000511	0.000224	Engineering Calculation
Toluene	92467	0.000931	0.00408	0.0000466	0.000204	Engineering Calculation
Ethylbenzene	92467	0.0000947	0.000415	0.00000473	0.0000207	Engineering Calculation
Xylenes	92467	0.000347	0.00152	0.0000174	0.0000760	Engineering Calculation
n-Hexane	92467	0.0160	0.0701	0.000801	0.00351	Engineering Calculation
Total HAPs		0.0184	0.0806	0.000920	0.00403	

1 - Uncontrolled emissions were taken directly from the EPA TANKS 4.0.9d output.

2 - No HAP emissions are reported by EPA Tanks 4.0.9d; therefore, these emissions were estimated based on the ration of HAPs to total VOCs using a representative liquid sample.

3 - Reduced working/breathing and flash losses are calculated from the pre-VRU working/breathing and flash losses assuming the VRU operates at 100% collection efficiency per TCEQ guidance (See the cover letter) but at a worst-case 95% of the time, in accordance with NSPS OOOOa 60.5412(a), resulting in a net 95% product recovery efficiency.

Tank Detail Sheet

Area	Chaco Slope	Tank Height	20 ft
Equipment Source Name	TK-15	Potential Operation	8760 hr/yr
Number of Tanks	15 of 15	Potential Throughput	92467 bbl/yr
Tank Capacity	500 bbl (each)	Calendar Year	2017
Tank Contents	Post-Flash Oil Tank		
VRU 1 Product Recovery Efficiency	95%		

Potential Emissions

Pollutant	Potential Throughput (bbl/yr)	Max Battery Potential Emissions				Source of Emission Factor
		Uncontrolled		Controlled		
		(lb/hr)	(ton/yr)	(lb/hr)	(ton/yr)	
VOC	92467	0.696	3.05	0.0348	0.152	EPA TANKS 4.0.9d
Benzene	92467	0.00102	0.00448	0.0000511	0.000224	Engineering Calculation
Toluene	92467	0.000931	0.00408	0.0000466	0.000204	Engineering Calculation
Ethylbenzene	92467	0.0000947	0.000415	0.00000473	0.0000207	Engineering Calculation
Xylenes	92467	0.000347	0.00152	0.0000174	0.0000760	Engineering Calculation
n-Hexane	92467	0.0160	0.0701	0.000801	0.00351	Engineering Calculation
Total HAPs		0.0184	0.0806	0.000920	0.00403	

1 - Uncontrolled emissions were taken directly from the EPA TANKS 4.0.9d output.

2 - No HAP emissions are reported by EPA Tanks 4.0.9d; therefore, these emissions were estimated based on the ration of HAPs to total VOCs using a representative liquid sample.

3 - Reduced working/breathing and flash losses are calculated from the pre-VRU working/breathing and flash losses assuming the VRU operates at 100% collection efficiency per TCEQ guidance (See the cover letter) but at a worst-case 95% of the time, in accordance with NSPS OOOOa 60.5412(a), resulting in a net 95% product recovery efficiency.

Tank Detail Sheet

Area	Chaco Slope	Tank Height	20 ft
Equipment Source Name	PWTK-1	Potential Operation	8760 hr/yr
Number of Tanks	1 of 2	Potential Throughput	365000 bbl/yr
Tank Capacity	500 bbl (each)	Calendar Year	2017
Tank Contents	Post-Flash PW Tank		
VRU 1 Product Recovery Efficiency	95%		

Potential Emissions

Pollutant	Potential Throughput (bbl/yr)	Max Battery Potential Emissions				Source of Emission Factor
		Uncontrolled		Controlled		
		(lb/hr)	(ton/yr)	(lb/hr)	(ton/yr)	
VOC	365000	0.00858	0.0376	0.000429	0.00188	EPA TANKS 4.0.9d
Benzene	365000	0.0000521	0.000228	0.00000261	0.0000114	Engineering Calculation
Toluene	365000	0.0000812	0.000356	0.00000406	0.0000178	Engineering Calculation
Ethylbenzene	365000	0.00000506	0.0000222	0.000000253	0.00000111	Engineering Calculation
Xylenes	365000	0.0000380	0.000166	0.00000190	0.00000831	Engineering Calculation
n-Hexane	365000	0.0000288	0.000126	0.00000144	0.00000630	Engineering Calculation
Total HAPs		0.000205	0.000898	0.0000103	0.0000449	

NOTES:

1 - Produced water potential throughput rate assumed to be 250 bbl/d/well.

2 - Uncontrolled VOC emissions were taken directly from the EPA TANKS 4.0.9d output.

3 - No HAP emissions are reported by EPA Tanks 4.0.9d; therefore, these emissions were estimated based on the ration of HAPs to total VOCs using a representative liquid sample.

4 - Reduced working/breathing and flash losses are calculated from the pre-VRU working/breathing and flash losses assuming the VRU operates at 100% collection efficiency per TCEQ guidance (See the cover letter) but at a worst-case 95% of the time, in accordance with NSPS OOOOa 60.5412(a), resulting in a net 95% product recovery efficiency.

Tank Detail Sheet

Area	Chaco Slope	Tank Height	20 ft
Equipment Source Name	PWTK-2	Potential Operation	8760 hr/yr
Number of Tanks	2 of 2	Potential Throughput	365000 bbl/yr
Tank Capacity	500 bbl (each)	Calendar Year	2017
Tank Contents	Post-Flash PW Tank		
VRU 1 Product Recovery Efficiency	95%		

Potential Emissions

Pollutant	Potential Throughput (bbl/yr)	Max Battery Potential Emissions				Source of Emission Factor
		Uncontrolled		Controlled		
		(lb/hr)	(ton/yr)	(lb/hr)	(ton/yr)	
VOC	365000	0.00858	0.0376	0.000429	0.00188	EPA TANKS 4.0.9d
Benzene	365000	0.0000521	0.000228	0.00000261	0.0000114	Engineering Calculation
Toluene	365000	0.0000812	0.000356	0.00000406	0.0000178	Engineering Calculation
Ethylbenzene	365000	0.00000506	0.0000222	0.000000253	0.00000111	Engineering Calculation
Xylenes	365000	0.0000380	0.000166	0.00000190	0.00000831	Engineering Calculation
n-Hexane	365000	0.0000288	0.000126	0.00000144	0.00000630	Engineering Calculation
Total HAPs		0.000205	0.000898	0.0000103	0.0000449	

NOTES:

1 - Produced water potential throughput rate assumed to be 250 bbl/d/well.

2 - Uncontrolled VOC emissions were taken directly from the EPA TANKS 4.0.9d output.

3 - No HAP emissions are reported by EPA Tanks 4.0.9d; therefore, these emissions were estimated based on the ration of HAPs to total VOCs using a representative liquid sample.

4 - Reduced working/breathing and flash losses are calculated from the pre-VRU working/breathing and flash losses assuming the VRU operates at 100% collection efficiency per TCEQ guidance (See the cover letter) but at a worst-case 95% of the time, in accordance with NSPS OOOOa 60.5412(a), resulting in a net 95% product recovery efficiency.

Heater / Boiler Detail Sheet

Equipment Source Name	HT-1			
Source Description	Separator Heater			
Equipment Usage	Separator Heater		Potential operation	8760 hr/yr
Equipment Make	Shurefire			
Equipment Model	TBD		Potential fuel usage	10.74 MMscf/yr
Serial Number	TBD			
Number of Heaters	1 of 4			
Emission Controls	None			
Fuel Heating Value	1020	Btu/scf	Gas Analysis	
Heat Rate	1.250	MMBtu/hr		
Sulfur Content	0.0	grains S/MMscf	Gas Analysis	

Potential Emissions

Pollutant	Emission Factor (lb/MMscf)	Nominal Rating (MMBtu/hr)	Hrs of Operation (hrs/yr)	Estimated Emissions (lb/hr)	Estimated Emissions (tpy)	Source of Emission Factor
NOx	100	1.250	8760	0.12255	0.53676	AP-42 Table 1.4-1
CO	84	1.250	8760	0.10294	0.45088	AP-42 Table 1.4-1
VOC	5.5	1.250	8760	0.00674	0.02952	AP-42 Table 1.4-2
SOx	0.6	1.250	8760	0.00000	0.00000	AP-42 Table 1.4-2
PM10	7.6	1.250	8760	0.00931	0.04079	AP-42 Table 1.4-2
Benzene	0.0021	1.250	8760	0.00000	0.00001	AP-42 Table 1.4-3
n-Hexane	1.80	1.250	8760	0.00221	0.00966	AP-42 Table 1.4-3
Toluene	0.0034	1.250	8760	0.00000	0.00002	AP-42 Table 1.4-3
CH_2O	0.075	1.250	8760	0.00009	0.00040	AP-42 Table 1.4-3
Total HAPs				0.00230	0.01009	

Sample Calculation for NOx

100 lb/MMscf / 1020.00 Btu/scf * 1.250 MMBtu/hr = 0.12255 lb/hr

Heater / Boiler Detail Sheet

Equipment Source Name	HT-2				
Source Description	Separator Heater				
Equipment Usage	Separator Heater		Potential operation	8760	hr/yr
Equipment Make	Shurefire				
Equipment Model	TBD		Potential fuel usage	10.74	MMscf/yr
Serial Number	TBD				
Number of Heaters	2 of 4				
Emission Controls	None				
Fuel Heating Value	1020	Btu/scf	Gas Analysis		
Heat Rate	1.250	MMBtu/hr			
Sulfur Content	0.0	grains S/MMscf	Gas Analysis		

Potential Emissions

Pollutant	Emission Factor (lb/MMscf)	Nominal Rating (MMBtu/hr)	Hrs of Operation (hrs/yr)	Estimated Emissions (lb/hr)	Estimated Emissions (tpy)	Source of Emission Factor
NOx	100	1.250	8760	0.12255	0.53676	AP-42 Table 1.4-1
CO	84	1.250	8760	0.10294	0.45088	AP-42 Table 1.4-1
VOC	5.5	1.250	8760	0.00674	0.02952	AP-42 Table 1.4-2
SOx	0.6	1.250	8760	0.00000	0.00000	AP-42 Table 1.4-2
PM10	7.6	1.250	8760	0.00931	0.04079	AP-42 Table 1.4-2
Benzene	0.0021	1.250	8760	0.00000	0.00001	AP-42 Table 1.4-3
n-Hexane	1.80	1.250	8760	0.00221	0.00966	AP-42 Table 1.4-3
Toluene	0.0034	1.250	8760	0.00000	0.00002	AP-42 Table 1.4-3
CH_2O	0.075	1.250	8760	0.00009	0.00040	AP-42 Table 1.4-3
Total HAPs				0.00230	0.01009	

Sample Calculation for NOx

100 lb/MMscf / 1020.00 Btu/scf * 1.250 MMBtu/hr = 0.12255 lb/hr

Heater / Boiler Detail Sheet

Equipment Source Name	HT-3				
Source Description	Separator Heater				
Equipment Usage	Separator Heater		Potential operation	8760	hr/yr
Equipment Make	Shurefire				
Equipment Model	TBD		Potential fuel usage	10.74	MMscf/yr
Serial Number	TBD				
Number of Heaters	3 of 4				
Emission Controls	None				
Fuel Heating Value	1020	Btu/scf	Gas Analysis		
Heat Rate	1.250	MMBtu/hr			
Sulfur Content	0.0	grains S/MMscf	Gas Analysis		

Potential Emissions

Pollutant	Emission Factor (lb/MMscf)	Nominal Rating (MMBtu/hr)	Hrs of Operation (hrs/yr)	Estimated Emissions (lb/hr)	Estimated Emissions (tpy)	Source of Emission Factor
NOx	100	1.250	8760	0.12255	0.53676	AP-42 Table 1.4-1
CO	84	1.250	8760	0.10294	0.45088	AP-42 Table 1.4-1
VOC	5.5	1.250	8760	0.00674	0.02952	AP-42 Table 1.4-2
SOx	0.6	1.250	8760	0.00000	0.00000	AP-42 Table 1.4-2
PM10	7.6	1.250	8760	0.00931	0.04079	AP-42 Table 1.4-2
Benzene	0.0021	1.250	8760	0.00000	0.00001	AP-42 Table 1.4-3
n-Hexane	1.80	1.250	8760	0.00221	0.00966	AP-42 Table 1.4-3
Toluene	0.0034	1.250	8760	0.00000	0.00002	AP-42 Table 1.4-3
CH_2O	0.075	1.250	8760	0.00009	0.00040	AP-42 Table 1.4-3
Total HAPs				0.00230	0.01009	

Sample Calculation for NOx

100 lb/MMscf / 1020.00 Btu/scf * 1.250 MMBtu/hr = 0.12255 lb/hr

Heater / Boiler Detail Sheet

Equipment Source Name	HT-4				
Source Description	Separator Heater				
Equipment Usage	Separator Heater		Potential operation	8760	hr/yr
Equipment Make	Shurefire				
Equipment Model	TBD		Potential fuel usage	10.74	MMscf/yr
Serial Number	TBD				
Number of Heaters	4 of 4				
Emission Controls	None				
Fuel Heating Value	1020	Btu/scf	Gas Analysis		
Heat Rate	1.250	MMBtu/hr			
Sulfur Content	0.0	grains S/MMscf	Gas Analysis		

Potential Emissions

Pollutant	Emission Factor (lb/MMscf)	Nominal Rating (MMBtu/hr)	Hrs of Operation (hrs/yr)	Estimated Emissions (lb/hr)	Estimated Emissions (tpy)	Source of Emission Factor
NOx	100	1.250	8760	0.12255	0.53676	AP-42 Table 1.4-1
CO	84	1.250	8760	0.10294	0.45088	AP-42 Table 1.4-1
VOC	5.5	1.250	8760	0.00674	0.02952	AP-42 Table 1.4-2
SOx	0.6	1.250	8760	0.00000	0.00000	AP-42 Table 1.4-2
PM10	7.6	1.250	8760	0.00931	0.04079	AP-42 Table 1.4-2
Benzene	0.0021	1.250	8760	0.00000	0.00001	AP-42 Table 1.4-3
n-Hexane	1.80	1.250	8760	0.00221	0.00966	AP-42 Table 1.4-3
Toluene	0.0034	1.250	8760	0.00000	0.00002	AP-42 Table 1.4-3
CH_2O	0.075	1.250	8760	0.00009	0.00040	AP-42 Table 1.4-3
Total HAPs				0.00230	0.01009	

Sample Calculation for NOx

100 lb/MMscf / 1020.00 Btu/scf * 1.250 MMBtu/hr = 0.12255 lb/hr

Heater / Boiler Detail Sheet

Equipment Source Name	HT-5			
Source Description	Fuel Gas Separator Heater			
Equipment Usage	Fuel Gas Separator Heater		Potential operation	8760 hr/yr
Equipment Make	Shurefire			
Equipment Model	TBD		Potential fuel usage	6.01 MMscf/yr
Serial Number	TBD			
Number of Heaters	1 of 1			
Emission Controls	None			
Fuel Heating Value	1020	Btu/scf	Gas Analysis	
Heat Rate	0.700	MMBtu/hr		
Sulfur Content	0.0	grains S/MMscf	Gas Analysis	

Potential Emissions

Pollutant	Emission Factor (lb/MMscf)	Nominal Rating (MMBtu/hr)	Hrs of Operation (hrs/yr)	Estimated Emissions (lb/hr)	Estimated Emissions (tpy)	Source of Emission Factor
NOx	100	0.700	8760	0.06863	0.30059	AP-42 Table 1.4-1
CO	84	0.700	8760	0.05765	0.25249	AP-42 Table 1.4-1
VOC	5.5	0.700	8760	0.00377	0.01653	AP-42 Table 1.4-2
SOx	0.6	0.700	8760	0.00000	0.00000	AP-42 Table 1.4-2
PM10	7.6	0.700	8760	0.00522	0.02284	AP-42 Table 1.4-2
Benzene	0.0021	0.700	8760	0.00000	0.00001	AP-42 Table 1.4-3
n-Hexane	1.80	0.700	8760	0.00124	0.00541	AP-42 Table 1.4-3
Toluene	0.0034	0.700	8760	0.00000	0.00001	AP-42 Table 1.4-3
CH_2O	0.075	0.700	8760	0.00005	0.00023	AP-42 Table 1.4-3
Total HAPs				0.00129	0.00565	

Sample Calculation for NOx

100 lb/MMscf / 1020.00 Btu/scf * 0.700 MMBtu/hr = 0.06863 lb/hr

Engine Emission Detail Sheet

Item	Value
Source Name:	GEN-1
Description:	Generator
QTY:	1 of 9
Make:	Capstone
Model:	Capstone C-65 NG Std
Serial Number:	TBD
Manufacture Date:	TBD
Fuel Type:	Natural Gas
Engine Type:	Turbine

Item	Value	Units	Source
Rated Horsepower:	87	hp	Manufacturer
Heat Rate:	0.842	MMBtu/hr	Manufacturer
Fuel Heat Value:	1162.2	Btu/scf	Gas Analysis
Emisson Controls:	None		
Control Efficiency:	0%		
Potential Operation:	8760	hr/yr	
Elevation:	6826	ft	
Sulfur Content	0.0	grains S/MMscf	Gas Analysis

Potential Emissions

Pollutant	Uncontrolled Emission Factor	Units	Nominal Rating	Hours of Operation	Uncontrolled Emissions		Controlled Emissions			Source of Controlled Emission Factor
	EF	Units	(hp)	(hrs/yr)	(lb/hr)	(tpy)	EF (g/hp-hr)	(lb/hr)	(tpy)	
NOx	0.16	g/hp-hr	87	8760	0.0307	0.134	0.16	0.0307	0.134	Manufacturer Data
VOC	0.034	g/hp-hr	87	8760	0.00652	0.0286	0.034	0.00652	0.0286	Manufacturer Data
CO	0.42	g/hp-hr	87	8760	0.0806	0.353	0.42	0.0806	0.353	Manufacturer Data
SO2	0.000588	lb/mmBtu	87	8760	0.00	0.00	0.000588	0.00	0.00	EPA AP-42 Table 3.2-2
PM10*	0.009987	lb/mmBtu	87	8760	0.00841	0.0368	0.0100	0.00841	0.0368	EPA AP-42 Table 3.2-2

HAPs	Uncontrolled Emission Factor	Units	Nominal Rating	Hours of Operation	Uncontrolled Emissions		Controlled Emissions		Source of Uncontrolled Emission Factor
	EF	Units	(MMBtu/hr)	(hrs/yr)	(lb/hr)	(tpy)	(lb/hr)	(tpy)	
Formaldehyde	0.0528	lb/mmBtu	0.842	8760	0.0445	0.195	0.0445	0.195	EPA AP-42 Table 3.2-2
Acetaldehyde	0.00836	lb/mmBtu	0.842	8760	0.00704	0.0308	0.00704	0.0308	EPA AP-42 Table 3.2-2
Acrolein	0.00514	lb/mmBtu	0.842	8760	0.00433	0.0190	0.00433	0.0190	EPA AP-42 Table 3.2-2
Benzene	0.00044	lb/mmBtu	0.842	8760	0.000370	0.00162	0.000370	0.00162	EPA AP-42 Table 3.2-2
Ethylbenzene	0.0000397	lb/mmBtu	0.842	8760	0.0000334	0.000146	0.0000334	0.000146	EPA AP-42 Table 3.2-2
n-Hexane	0.00111	lb/mmBtu	0.842	8760	0.000935	0.00409	0.000935	0.00409	EPA AP-42 Table 3.2-2
Toluene	0.000408	lb/mmBtu	0.842	8760	0.000344	0.001505	0.000344	0.00150	EPA AP-42 Table 3.2-2
Xylene	0.000184	lb/mmBtu	0.842	8760	0.000155	0.000679	0.000155	0.000679	EPA AP-42 Table 3.2-2
				TOTAL HAP's:	0.0577	0.253	0.0577	0.253	

Sample Calculation

0.16 g/hp-hr * 87 hp / 453.59 (g/lb) * 8760 hr/yr / 2000 lb/ton = 0.134 tpy

Engine Emission Detail Sheet

Item	Value
Source Name:	GEN-2
Description:	Generator
QTY:	2 of 9
Make:	Capstone
Model:	Capstone C-65 NG Std
Serial Number:	TBD
Manufacture Date:	TBD
Fuel Type:	Natural Gas
Engine Type:	Turbine

Item	Value	Units	Source
Rated Horsepower:	87	hp	Manufacturer
Heat Rate:	0.842	MMBtu/hr	Manufacturer
Fuel Heat Value:	1162.2	Btu/scf	Gas Analysis
Emisson Controls:	None		
Control Efficiency:	0%		
Potential Operation:	8760	hr/yr	
Elevation:	6826	ft	
Sulfur Content	0.0	grains S/MMscf	Gas Analysis

Potential Emissions

Pollutant	Uncontrolled Emission Factor	Units	Nominal Rating	Hours of Operation	Uncontrolled Emissions		Controlled Emissions			Source of Controlled Emission Factor
	EF	Units	(hp)	(hrs/yr)	(lb/hr)	(tpy)	EF (g/hp-hr)	(lb/hr)	(tpy)	
NOx	0.16	g/hp-hr	87	8760	0.0307	0.134	0.16	0.0307	0.134	Manufacturer Data
VOC	0.034	g/hp-hr	87	8760	0.00652	0.0286	0.034	0.00652	0.0286	Manufacturer Data
CO	0.42	g/hp-hr	87	8760	0.0806	0.353	0.42	0.0806	0.353	Manufacturer Data
SO2	0.000588	lb/mmBtu	87	8760	0.00	0.00	0.000588	0.00	0.00	EPA AP-42 Table 3.2-2
PM10*	0.009987	lb/mmBtu	87	8760	0.00841	0.0368	0.0100	0.00841	0.0368	EPA AP-42 Table 3.2-2

HAPs	Uncontrolled Emission Factor	Units	Nominal Rating	Hours of Operation	Uncontrolled Emissions		Controlled Emissions		Source of Uncontrolled Emission Factor
	EF	Units	(MMBtu/hr)	(hrs/yr)	(lb/hr)	(tpy)	(lb/hr)	(tpy)	
Formaldehyde	0.0528	lb/mmBtu	0.842	8760	0.0445	0.195	0.0445	0.195	EPA AP-42 Table 3.2-2
Acetaldehyde	0.00836	lb/mmBtu	0.842	8760	0.00704	0.0308	0.00704	0.0308	EPA AP-42 Table 3.2-2
Acrolein	0.00514	lb/mmBtu	0.842	8760	0.00433	0.0190	0.00433	0.0190	EPA AP-42 Table 3.2-2
Benzene	0.00044	lb/mmBtu	0.842	8760	0.000370	0.00162	0.000370	0.00162	EPA AP-42 Table 3.2-2
Ethylbenzene	0.0000397	lb/mmBtu	0.842	8760	0.0000334	0.000146	0.0000334	0.000146	EPA AP-42 Table 3.2-2
n-Hexane	0.00111	lb/mmBtu	0.842	8760	0.000935	0.00409	0.000935	0.00409	EPA AP-42 Table 3.2-2
Toluene	0.000408	lb/mmBtu	0.842	8760	0.000344	0.001505	0.000344	0.00150	EPA AP-42 Table 3.2-2
Xylene	0.000184	lb/mmBtu	0.842	8760	0.000155	0.000679	0.000155	0.000679	EPA AP-42 Table 3.2-2
				TOTAL HAP's:	0.0577	0.253	0.0577	0.253	

Sample Calculation

0.16 g/hp-hr * 87 hp / 453.59 (g/lb) * 8760 hr/yr / 2000 lb/ton = 0.134 tpy

Engine Emission Detail Sheet

Item	Value
Source Name:	GEN-3
Description:	Generator
QTY:	3 of 9
Make:	Capstone
Model:	Capstone C-65 NG Std
Serial Number:	TBD
Manufacture Date:	TBD
Fuel Type:	Natural Gas
Engine Type:	Turbine

Item	Value	Units	Source
Rated Horsepower:	87	hp	Manufacturer
Heat Rate:	0.842	MMBtu/hr	Manufacturer
Fuel Heat Value:	1162.2	Btu/scf	Gas Analysis
Emisson Controls:	None		
Control Efficiency:	0%		
Potential Operation:	8760	hr/yr	
Elevation:	6826	ft	
Sulfur Content	0.0	grains S/MMscf	Gas Analysis

Potential Emissions

Pollutant	Uncontrolled Emission Factor	Units	Nominal Rating	Hours of Operation	Uncontrolled Emissions		Controlled Emissions			Source of Controlled Emission Factor
	EF	Units	(hp)	(hrs/yr)	(lb/hr)	(tpy)	EF (g/hp-hr)	(lb/hr)	(tpy)	
NOx	0.16	g/hp-hr	87	8760	0.0307	0.134	0.16	0.0307	0.134	Manufacturer Data
VOC	0.034	g/hp-hr	87	8760	0.00652	0.0286	0.034	0.00652	0.0286	Manufacturer Data
CO	0.42	g/hp-hr	87	8760	0.0806	0.353	0.42	0.0806	0.353	Manufacturer Data
SO2	0.000588	lb/mmBtu	87	8760	0.00	0.00	0.000588	0.00	0.00	EPA AP-42 Table 3.2-2
PM10*	0.009987	lb/mmBtu	87	8760	0.00841	0.0368	0.0100	0.00841	0.0368	EPA AP-42 Table 3.2-2

HAPs	Uncontrolled Emission Factor	Units	Nominal Rating	Hours of Operation	Uncontrolled Emissions		Controlled Emissions		Source of Uncontrolled Emission Factor
	EF	Units	(MMBtu/hr)	(hrs/yr)	(lb/hr)	(tpy)	(lb/hr)	(tpy)	
Formaldehyde	0.0528	lb/mmBtu	0.842	8760	0.0445	0.195	0.0445	0.195	EPA AP-42 Table 3.2-2
Acetaldehyde	0.00836	lb/mmBtu	0.842	8760	0.00704	0.0308	0.00704	0.0308	EPA AP-42 Table 3.2-2
Acrolein	0.00514	lb/mmBtu	0.842	8760	0.00433	0.0190	0.00433	0.0190	EPA AP-42 Table 3.2-2
Benzene	0.00044	lb/mmBtu	0.842	8760	0.000370	0.00162	0.000370	0.00162	EPA AP-42 Table 3.2-2
Ethylbenzene	0.0000397	lb/mmBtu	0.842	8760	0.0000334	0.000146	0.0000334	0.000146	EPA AP-42 Table 3.2-2
n-Hexane	0.00111	lb/mmBtu	0.842	8760	0.000935	0.00409	0.000935	0.00409	EPA AP-42 Table 3.2-2
Toluene	0.000408	lb/mmBtu	0.842	8760	0.000344	0.001505	0.000344	0.00150	EPA AP-42 Table 3.2-2
Xylene	0.000184	lb/mmBtu	0.842	8760	0.000155	0.000679	0.000155	0.000679	EPA AP-42 Table 3.2-2
				TOTAL HAP's:	0.0577	0.253	0.0577	0.253	

Sample Calculation

0.16 g/hp-hr * 87 hp / 453.59 (g/lb) * 8760 hr/yr / 2000 lb/ton = 0.134 tpy

Engine Emission Detail Sheet

Item	Value
Source Name:	GEN-4
Description:	Generator
QTY:	4 of 9
Make:	Capstone
Model:	Capstone C-65 NG Std
Serial Number:	TBD
Manufacture Date:	TBD
Fuel Type:	Natural Gas
Engine Type:	Turbine

Item	Value	Units	Source
Rated Horsepower:	87	hp	Manufacturer
Heat Rate:	0.842	MMBtu/hr	Manufacturer
Fuel Heat Value:	1162.2	Btu/scf	Gas Analysis
Emisson Controls:	None		
Control Efficiency:	0%		
Potential Operation:	8760	hr/yr	
Elevation:	6826	ft	
Sulfur Content	0.0	grains S/MMscf	Gas Analysis

Potential Emissions

Pollutant	Uncontrolled Emission Factor	Units	Nominal Rating	Hours of Operation	Uncontrolled Emissions		Controlled Emissions			Source of Controlled Emission Factor
	EF	Units	(hp)	(hrs/yr)	(lb/hr)	(tpy)	EF (g/hp-hr)	(lb/hr)	(tpy)	
NOx	0.16	g/hp-hr	87	8760	0.0307	0.134	0.16	0.0307	0.134	Manufacturer Data
VOC	0.034	g/hp-hr	87	8760	0.00652	0.0286	0.034	0.00652	0.0286	Manufacturer Data
CO	0.42	g/hp-hr	87	8760	0.0806	0.353	0.42	0.0806	0.353	Manufacturer Data
SO2	0.000588	lb/mmBtu	87	8760	0.00	0.00	0.000588	0.00	0.00	EPA AP-42 Table 3.2-2
PM10*	0.009987	lb/mmBtu	87	8760	0.00841	0.0368	0.0100	0.00841	0.0368	EPA AP-42 Table 3.2-2

HAPs	Uncontrolled Emission Factor	Units	Nominal Rating	Hours of Operation	Uncontrolled Emissions		Controlled Emissions		Source of Uncontrolled Emission Factor
	EF	Units	(MMBtu/hr)	(hrs/yr)	(lb/hr)	(tpy)	(lb/hr)	(tpy)	
Formaldehyde	0.0528	lb/mmBtu	0.842	8760	0.0445	0.195	0.0445	0.195	EPA AP-42 Table 3.2-2
Acetaldehyde	0.00836	lb/mmBtu	0.842	8760	0.00704	0.0308	0.00704	0.0308	EPA AP-42 Table 3.2-2
Acrolein	0.00514	lb/mmBtu	0.842	8760	0.00433	0.0190	0.00433	0.0190	EPA AP-42 Table 3.2-2
Benzene	0.00044	lb/mmBtu	0.842	8760	0.000370	0.00162	0.000370	0.00162	EPA AP-42 Table 3.2-2
Ethylbenzene	0.0000397	lb/mmBtu	0.842	8760	0.0000334	0.000146	0.0000334	0.000146	EPA AP-42 Table 3.2-2
n-Hexane	0.00111	lb/mmBtu	0.842	8760	0.000935	0.00409	0.000935	0.00409	EPA AP-42 Table 3.2-2
Toluene	0.000408	lb/mmBtu	0.842	8760	0.000344	0.001505	0.000344	0.00150	EPA AP-42 Table 3.2-2
Xylene	0.000184	lb/mmBtu	0.842	8760	0.000155	0.000679	0.000155	0.000679	EPA AP-42 Table 3.2-2
				TOTAL HAP's:	0.0577	0.253	0.0577	0.253	

Sample Calculation

0.16 g/hp-hr * 87 hp / 453.59 (g/lb) * 8760 hr/yr / 2000 lb/ton = 0.134 tpy

Engine Emission Detail Sheet

Item	Value
Source Name:	GEN-5
Description:	Generator
QTY:	5 of 9
Make:	Capstone
Model:	Capstone C-65 NG Std
Serial Number:	TBD
Manufacture Date:	TBD
Fuel Type:	Natural Gas
Engine Type:	Turbine

Item	Value	Units	Source
Rated Horsepower:	87	hp	Manufacturer
Heat Rate:	0.842	MMBtu/hr	Manufacturer
Fuel Heat Value:	1162.2	Btu/scf	Gas Analysis
Emisson Controls:	None		
Control Efficiency:	0%		
Potential Operation:	8760	hr/yr	
Elevation:	6826	ft	
Sulfur Content	0.0	grains S/MMscf	Gas Analysis

Potential Emissions

Pollutant	Uncontrolled Emission Factor	Units	Nominal Rating	Hours of Operation	Uncontrolled Emissions		Controlled Emissions			Source of Controlled Emission Factor
	EF	Units	(hp)	(hrs/yr)	(lb/hr)	(tpy)	EF (g/hp-hr)	(lb/hr)	(tpy)	
NOx	0.16	g/hp-hr	87	8760	0.0307	0.134	0.16	0.0307	0.134	Manufacturer Data
VOC	0.034	g/hp-hr	87	8760	0.00652	0.0286	0.034	0.00652	0.0286	Manufacturer Data
CO	0.42	g/hp-hr	87	8760	0.0806	0.353	0.42	0.0806	0.353	Manufacturer Data
SO2	0.000588	lb/mmBtu	87	8760	0.00	0.00	0.000588	0.00	0.00	EPA AP-42 Table 3.2-2
PM10*	0.009987	lb/mmBtu	87	8760	0.00841	0.0368	0.0100	0.00841	0.0368	EPA AP-42 Table 3.2-2

HAPs	Uncontrolled Emission Factor	Units	Nominal Rating	Hours of Operation	Uncontrolled Emissions		Controlled Emissions		Source of Uncontrolled Emission Factor
	EF	Units	(MMBtu/hr)	(hrs/yr)	(lb/hr)	(tpy)	(lb/hr)	(tpy)	
Formaldehyde	0.0528	lb/mmBtu	0.842	8760	0.0445	0.195	0.0445	0.195	EPA AP-42 Table 3.2-2
Acetaldehyde	0.00836	lb/mmBtu	0.842	8760	0.00704	0.0308	0.00704	0.0308	EPA AP-42 Table 3.2-2
Acrolein	0.00514	lb/mmBtu	0.842	8760	0.00433	0.0190	0.00433	0.0190	EPA AP-42 Table 3.2-2
Benzene	0.00044	lb/mmBtu	0.842	8760	0.000370	0.00162	0.000370	0.00162	EPA AP-42 Table 3.2-2
Ethylbenzene	0.0000397	lb/mmBtu	0.842	8760	0.0000334	0.000146	0.0000334	0.000146	EPA AP-42 Table 3.2-2
n-Hexane	0.00111	lb/mmBtu	0.842	8760	0.000935	0.00409	0.000935	0.00409	EPA AP-42 Table 3.2-2
Toluene	0.000408	lb/mmBtu	0.842	8760	0.000344	0.001505	0.000344	0.00150	EPA AP-42 Table 3.2-2
Xylene	0.000184	lb/mmBtu	0.842	8760	0.000155	0.000679	0.000155	0.000679	EPA AP-42 Table 3.2-2
				TOTAL HAP's:	0.0577	0.253	0.0577	0.253	

Sample Calculation

0.16 g/hp-hr * 87 hp / 453.59 (g/lb) * 8760 hr/yr / 2000 lb/ton = 0.134 tpy

Engine Emission Detail Sheet

Item	Value
Source Name:	GEN-6
Description:	Generator
QTY:	6 of 9
Make:	Capstone
Model:	Capstone C-65 NG Std
Serial Number:	TBD
Manufacture Date:	TBD
Fuel Type:	Natural Gas
Engine Type:	Turbine

Item	Value	Units	Source
Rated Horsepower:	87	hp	Manufacturer
Heat Rate:	0.842	MMBtu/hr	Manufacturer
Fuel Heat Value:	1162.2	Btu/scf	Gas Analysis
Emisson Controls:	None		
Control Efficiency:	0%		
Potential Operation:	8760	hr/yr	
Elevation:	6826	ft	
Sulfur Content	0.0	grains S/MMscf	Gas Analysis

Potential Emissions

Pollutant	Uncontrolled Emission Factor	Units	Nominal Rating	Hours of Operation	Uncontrolled Emissions		Controlled Emissions			Source of Controlled Emission Factor
	EF	Units	(hp)	(hrs/yr)	(lb/hr)	(tpy)	EF (g/hp-hr)	(lb/hr)	(tpy)	
NOx	0.16	g/hp-hr	87	8760	0.0307	0.134	0.16	0.0307	0.134	Manufacturer Data
VOC	0.034	g/hp-hr	87	8760	0.00652	0.0286	0.034	0.00652	0.0286	Manufacturer Data
CO	0.42	g/hp-hr	87	8760	0.0806	0.353	0.42	0.0806	0.353	Manufacturer Data
SO2	0.000588	lb/mmBtu	87	8760	0.00	0.00	0.000588	0.00	0.00	EPA AP-42 Table 3.2-2
PM10*	0.009987	lb/mmBtu	87	8760	0.00841	0.0368	0.0100	0.00841	0.0368	EPA AP-42 Table 3.2-2

HAPs	Uncontrolled Emission Factor	Units	Nominal Rating	Hours of Operation	Uncontrolled Emissions		Controlled Emissions		Source of Uncontrolled Emission Factor
	EF	Units	(MMBtu/hr)	(hrs/yr)	(lb/hr)	(tpy)	(lb/hr)	(tpy)	
Formaldehyde	0.0528	lb/mmBtu	0.842	8760	0.0445	0.195	0.0445	0.195	EPA AP-42 Table 3.2-2
Acetaldehyde	0.00836	lb/mmBtu	0.842	8760	0.00704	0.0308	0.00704	0.0308	EPA AP-42 Table 3.2-2
Acrolein	0.00514	lb/mmBtu	0.842	8760	0.00433	0.0190	0.00433	0.0190	EPA AP-42 Table 3.2-2
Benzene	0.00044	lb/mmBtu	0.842	8760	0.000370	0.00162	0.000370	0.00162	EPA AP-42 Table 3.2-2
Ethylbenzene	0.0000397	lb/mmBtu	0.842	8760	0.0000334	0.000146	0.0000334	0.000146	EPA AP-42 Table 3.2-2
n-Hexane	0.00111	lb/mmBtu	0.842	8760	0.000935	0.00409	0.000935	0.00409	EPA AP-42 Table 3.2-2
Toluene	0.000408	lb/mmBtu	0.842	8760	0.000344	0.001505	0.000344	0.00150	EPA AP-42 Table 3.2-2
Xylene	0.000184	lb/mmBtu	0.842	8760	0.000155	0.000679	0.000155	0.000679	EPA AP-42 Table 3.2-2
				TOTAL HAP's:	0.0577	0.253	0.0577	0.253	

Sample Calculation

0.16 g/hp-hr * 87 hp / 453.59 (g/lb) * 8760 hr/yr / 2000 lb/ton = 0.134 tpy

Engine Emission Detail Sheet

Item	Value
Source Name:	GEN-7
Description:	Generator
QTY:	7 of 9
Make:	Capstone
Model:	Capstone C-65 NG Std
Serial Number:	TBD
Manufacture Date:	TBD
Fuel Type:	Natural Gas
Engine Type:	Turbine

Item	Value	Units	Source
Rated Horsepower:	87	hp	Manufacturer
Heat Rate:	0.842	MMBtu/hr	Manufacturer
Fuel Heat Value:	1162.2	Btu/scf	Gas Analysis
Emisson Controls:	None		
Control Efficiency:	0%		
Potential Operation:	8760	hr/yr	
Elevation:	6826	ft	
Sulfur Content	0.0	grains S/MMscf	Gas Analysis

Potential Emissions

Pollutant	Uncontrolled Emission Factor	Units	Nominal Rating	Hours of Operation	Uncontrolled Emissions		Controlled Emissions			Source of Controlled Emission Factor
	EF	Units	(hp)	(hrs/yr)	(lb/hr)	(tpy)	EF (g/hp-hr)	(lb/hr)	(tpy)	
NOx	0.16	g/hp-hr	87	8760	0.0307	0.134	0.16	0.0307	0.134	Manufacturer Data
VOC	0.034	g/hp-hr	87	8760	0.00652	0.0286	0.034	0.00652	0.0286	Manufacturer Data
CO	0.42	g/hp-hr	87	8760	0.0806	0.353	0.42	0.0806	0.353	Manufacturer Data
SO2	0.000588	lb/mmBtu	87	8760	0.00	0.00	0.000588	0.00	0.00	EPA AP-42 Table 3.2-2
PM10*	0.009987	lb/mmBtu	87	8760	0.00841	0.0368	0.0100	0.00841	0.0368	EPA AP-42 Table 3.2-2

HAPs	Uncontrolled Emission Factor	Units	Nominal Rating	Hours of Operation	Uncontrolled Emissions		Controlled Emissions		Source of Uncontrolled Emission Factor
	EF	Units	(MMBtu/hr)	(hrs/yr)	(lb/hr)	(tpy)	(lb/hr)	(tpy)	
Formaldehyde	0.0528	lb/mmBtu	0.842	8760	0.0445	0.195	0.0445	0.195	EPA AP-42 Table 3.2-2
Acetaldehyde	0.00836	lb/mmBtu	0.842	8760	0.00704	0.0308	0.00704	0.0308	EPA AP-42 Table 3.2-2
Acrolein	0.00514	lb/mmBtu	0.842	8760	0.00433	0.0190	0.00433	0.0190	EPA AP-42 Table 3.2-2
Benzene	0.00044	lb/mmBtu	0.842	8760	0.000370	0.00162	0.000370	0.00162	EPA AP-42 Table 3.2-2
Ethylbenzene	0.0000397	lb/mmBtu	0.842	8760	0.0000334	0.000146	0.0000334	0.000146	EPA AP-42 Table 3.2-2
n-Hexane	0.00111	lb/mmBtu	0.842	8760	0.000935	0.00409	0.000935	0.00409	EPA AP-42 Table 3.2-2
Toluene	0.000408	lb/mmBtu	0.842	8760	0.000344	0.001505	0.000344	0.00150	EPA AP-42 Table 3.2-2
Xylene	0.000184	lb/mmBtu	0.842	8760	0.000155	0.000679	0.000155	0.000679	EPA AP-42 Table 3.2-2
				TOTAL HAP's:	0.0577	0.253	0.0577	0.253	

Sample Calculation

0.16 g/hp-hr * 87 hp / 453.59 (g/lb) * 8760 hr/yr / 2000 lb/ton = 0.134 tpy

Engine Emission Detail Sheet

Item	Value
Source Name:	GEN-8
Description:	Generator
QTY:	8 of 9
Make:	Capstone
Model:	Capstone C-65 NG Std
Serial Number:	TBD
Manufacture Date:	TBD
Fuel Type:	Natural Gas
Engine Type:	Turbine

Item	Value	Units	Source
Rated Horsepower:	87	hp	Manufacturer
Heat Rate:	0.842	MMBtu/hr	Manufacturer
Fuel Heat Value:	1162.2	Btu/scf	Gas Analysis
Emisson Controls:	None		
Control Efficiency:	0%		
Potential Operation:	8760	hr/yr	
Elevation:	6826	ft	
Sulfur Content	0.0	grains S/MMscf	Gas Analysis

Potential Emissions

Pollutant	Uncontrolled Emission Factor	Units	Nominal Rating	Hours of Operation	Uncontrolled Emissions		Controlled Emissions			Source of Controlled Emission Factor
	EF	Units	(hp)	(hrs/yr)	(lb/hr)	(tpy)	EF (g/hp-hr)	(lb/hr)	(tpy)	
NOx	0.16	g/hp-hr	87	8760	0.0307	0.134	0.16	0.0307	0.134	Manufacturer Data
VOC	0.034	g/hp-hr	87	8760	0.00652	0.0286	0.034	0.00652	0.0286	Manufacturer Data
CO	0.42	g/hp-hr	87	8760	0.0806	0.353	0.42	0.0806	0.353	Manufacturer Data
SO2	0.000588	lb/mmBtu	87	8760	0.00	0.00	0.000588	0.00	0.00	EPA AP-42 Table 3.2-2
PM10*	0.009987	lb/mmBtu	87	8760	0.00841	0.0368	0.0100	0.00841	0.0368	EPA AP-42 Table 3.2-2

HAPs	Uncontrolled Emission Factor	Units	Nominal Rating	Hours of Operation	Uncontrolled Emissions		Controlled Emissions		Source of Uncontrolled Emission Factor
	EF	Units	(MMBtu/hr)	(hrs/yr)	(lb/hr)	(tpy)	(lb/hr)	(tpy)	
Formaldehyde	0.0528	lb/mmBtu	0.842	8760	0.0445	0.195	0.0445	0.195	EPA AP-42 Table 3.2-2
Acetaldehyde	0.00836	lb/mmBtu	0.842	8760	0.00704	0.0308	0.00704	0.0308	EPA AP-42 Table 3.2-2
Acrolein	0.00514	lb/mmBtu	0.842	8760	0.00433	0.0190	0.00433	0.0190	EPA AP-42 Table 3.2-2
Benzene	0.00044	lb/mmBtu	0.842	8760	0.000370	0.00162	0.000370	0.00162	EPA AP-42 Table 3.2-2
Ethylbenzene	0.0000397	lb/mmBtu	0.842	8760	0.0000334	0.000146	0.0000334	0.000146	EPA AP-42 Table 3.2-2
n-Hexane	0.00111	lb/mmBtu	0.842	8760	0.000935	0.00409	0.000935	0.00409	EPA AP-42 Table 3.2-2
Toluene	0.000408	lb/mmBtu	0.842	8760	0.000344	0.001505	0.000344	0.00150	EPA AP-42 Table 3.2-2
Xylene	0.000184	lb/mmBtu	0.842	8760	0.000155	0.000679	0.000155	0.000679	EPA AP-42 Table 3.2-2
				TOTAL HAP's:	0.0577	0.253	0.0577	0.253	

Sample Calculation

0.16 g/hp-hr * 87 hp / 453.59 (g/lb) * 8760 hr/yr / 2000 lb/ton = 0.134 tpy

Engine Emission Detail Sheet

Item	Value
Source Name:	GEN-9
Description:	Generator
QTY:	9 of 9
Make:	Capstone
Model:	Capstone C-65 NG Std
Serial Number:	TBD
Manufacture Date:	TBD
Fuel Type:	Natural Gas
Engine Type:	Turbine

Item	Value	Units	Source
Rated Horsepower:	87	hp	Manufacturer
Heat Rate:	0.842	MMBtu/hr	Manufacturer
Fuel Heat Value:	1162.2	Btu/scf	Gas Analysis
Emisson Controls:	None		
Control Efficiency:	0%		
Potential Operation:	8760	hr/yr	
Elevation:	6826	ft	
Sulfur Content	0.0	grains S/MMscf	Gas Analysis

Potential Emissions

Pollutant	Uncontrolled Emission Factor	Units	Nominal Rating	Hours of Operation	Uncontrolled Emissions		Controlled Emissions			Source of Controlled Emission Factor
	EF	Units	(hp)	(hrs/yr)	(lb/hr)	(tpy)	EF (g/hp-hr)	(lb/hr)	(tpy)	
NOx	0.16	g/hp-hr	87	8760	0.0307	0.134	0.16	0.0307	0.134	Manufacturer Data
VOC	0.034	g/hp-hr	87	8760	0.00652	0.0286	0.034	0.00652	0.0286	Manufacturer Data
CO	0.42	g/hp-hr	87	8760	0.0806	0.353	0.42	0.0806	0.353	Manufacturer Data
SO2	0.000588	lb/mmBtu	87	8760	0.00	0.00	0.000588	0.00	0.00	EPA AP-42 Table 3.2-2
PM10*	0.009987	lb/mmBtu	87	8760	0.00841	0.0368	0.0100	0.00841	0.0368	EPA AP-42 Table 3.2-2

HAPs	Uncontrolled Emission Factor	Units	Nominal Rating	Hours of Operation	Uncontrolled Emissions		Controlled Emissions		Source of Uncontrolled Emission Factor
	EF	Units	(MMBtu/hr)	(hrs/yr)	(lb/hr)	(tpy)	(lb/hr)	(tpy)	
Formaldehyde	0.0528	lb/mmBtu	0.842	8760	0.0445	0.195	0.0445	0.195	EPA AP-42 Table 3.2-2
Acetaldehyde	0.00836	lb/mmBtu	0.842	8760	0.00704	0.0308	0.00704	0.0308	EPA AP-42 Table 3.2-2
Acrolein	0.00514	lb/mmBtu	0.842	8760	0.00433	0.0190	0.00433	0.0190	EPA AP-42 Table 3.2-2
Benzene	0.00044	lb/mmBtu	0.842	8760	0.000370	0.00162	0.000370	0.00162	EPA AP-42 Table 3.2-2
Ethylbenzene	0.0000397	lb/mmBtu	0.842	8760	0.0000334	0.000146	0.0000334	0.000146	EPA AP-42 Table 3.2-2
n-Hexane	0.00111	lb/mmBtu	0.842	8760	0.000935	0.00409	0.000935	0.00409	EPA AP-42 Table 3.2-2
Toluene	0.000408	lb/mmBtu	0.842	8760	0.000344	0.001505	0.000344	0.00150	EPA AP-42 Table 3.2-2
Xylene	0.000184	lb/mmBtu	0.842	8760	0.000155	0.000679	0.000155	0.000679	EPA AP-42 Table 3.2-2
				TOTAL HAP's:	0.0577	0.253	0.0577	0.253	

Sample Calculation

0.16 g/hp-hr * 87 hp / 453.59 (g/lb) * 8760 hr/yr / 2000 lb/ton = 0.134 tpy

Engine Emission Detail Sheet

Item	Value
Source Name:	GEN-10
Description:	Generator
QTY:	1 of 3
Make:	Capstone
Model:	Capstone C-200 NG
Serial Number:	TBD
Manufacture Date:	TBD
Fuel Type:	Natural Gas
Engine Type:	Turbine

Item	Value	Units	Source
Rated Horsepower:	269	hp	Manufacturer
Heat Rate:	2.28	MMBtu/hr	Manufacturer
Fuel Heat Value:	1162.2	Btu/scf	Gas Analysis
Emisson Controls:	None		
Control Efficiency:	0%		
Potential Operation:	8760	hr/yr	
Elevation:	6826	ft	
Sulfur Content	0.0	grains S/MMscf	Gas Analysis

Potential Emissions

Pollutant	Uncontrolled Emission Factor	Units	Nominal Rating	Hours of Operation	Uncontrolled Emissions		Controlled Emissions			Source of Controlled Emission Factor
	EF	Units	(hp)	(hrs/yr)	(lb/hr)	(tpy)	EF (g/hp-hr)	(lb/hr)	(tpy)	
NOx	0.14	g/hp-hr	269	8760	0.0830	0.364	0.14	0.0830	0.364	Manufacturer Data
VOC	0.034	g/hp-hr	269	8760	0.0202	0.0883	0.034	0.0202	0.0883	Manufacturer Data
CO	0.37	g/hp-hr	269	8760	0.219	0.961	0.37	0.219	0.961	Manufacturer Data
SO2	0.000588	lb/mmBtu	269	8760	0.00	0.00	0.000588	0.00	0.00	EPA AP-42 Table 3.2-2
PM10*	0.009987	lb/mmBtu	269	8760	0.0228	0.0997	0.0100	0.0228	0.0997	EPA AP-42 Table 3.2-2

HAPs	Uncontrolled	Units	Nominal	Hours of Operation	Uncontrolled Emissions		Controlled Emissions		Source of Uncontrolled Emission
	EF	Units	(MMBtu/hr)	(hrs/yr)	(lb/hr)	(tpy)	(lb/hr)	(tpy)	
Formaldehyde	0.0528	lb/mmBtu	2.280	8760	0.120	0.527	0.120	0.527	EPA AP-42 Table 3.2-2
Acetaldehyde	0.00836	lb/mmBtu	2.280	8760	0.0191	0.0835	0.0191	0.0835	EPA AP-42 Table 3.2-2
Acrolein	0.00514	lb/mmBtu	2.280	8760	0.0117	0.0513	0.0117	0.0513	EPA AP-42 Table 3.2-2
Benzene	0.00044	lb/mmBtu	2.280	8760	0.00100	0.00439	0.00100	0.00439	EPA AP-42 Table 3.2-2
Ethylbenzene	0.0000397	lb/mmBtu	2.280	8760	0.0000905	0.000396	0.0000905	0.000396	EPA AP-42 Table 3.2-2
n-Hexane	0.00111	lb/mmBtu	2.280	8760	0.00253	0.0111	0.00253	0.0111	EPA AP-42 Table 3.2-2
Toluene	0.000408	lb/mmBtu	2.280	8760	0.000930	0.00407	0.000930	0.00407	EPA AP-42 Table 3.2-2
Xylene	0.000184	lb/mmBtu	2.280	8760	0.000420	0.00184	0.000420	0.00184	EPA AP-42 Table 3.2-2
				TOTAL HAP's:	0.156	0.684	0.156	0.684	

Sample Calculation

0.14 g/hp-hr * 269 hp / 453.59 (g/lb) * 8760 hr/yr / 2000 lb/ton = 0.364 tpy

Engine Emission Detail Sheet

Item	Value
Source Name:	GEN-11
Description:	Generator
QTY:	2 of 3
Make:	Capstone
Model:	Capstone C-200 NG
Serial Number:	TBD
Manufacture Date:	TBD
Fuel Type:	Natural Gas
Engine Type:	Turbine

Item	Value	Units	Source
Rated Horsepower:	269	hp	Manufacturer
Heat Rate:	2.28	MMBtu/hr	Manufacturer
Fuel Heat Value:	1162.2	Btu/scf	Gas Analysis
Emisson Controls:	None		
Control Efficiency:	0%		
Potential Operation:	8760	hr/yr	
Elevation:	6826	ft	
Sulfur Content	0.0	grains S/MMscf	Gas Analysis

Potential Emissions

Pollutant	Uncontrolled Emission Factor	Units	Nominal Rating	Hours of Operation	Uncontrolled Emissions		Controlled Emissions			Source of Controlled Emission Factor
	EF	Units	(hp)	(hrs/yr)	(lb/hr)	(tpy)	EF (g/hp-hr)	(lb/hr)	(tpy)	
NOx	0.14	g/hp-hr	269	8760	0.0830	0.364	0.14	0.0830	0.364	Manufacturer Data
VOC	0.034	g/hp-hr	269	8760	0.0202	0.0883	0.034	0.0202	0.0883	Manufacturer Data
CO	0.37	g/hp-hr	269	8760	0.219	0.961	0.37	0.219	0.961	Manufacturer Data
SO2	0.000588	lb/mmBtu	269	8760	0.00	0.00	0.000588	0.00	0.00	EPA AP-42 Table 3.2-2
PM10*	0.009987	lb/mmBtu	269	8760	0.0228	0.0997	0.0100	0.0228	0.0997	EPA AP-42 Table 3.2-2

HAPs	Uncontrolled	Units	Nominal	Hours of Operation	Uncontrolled Emissions		Controlled Emissions		Source of Uncontrolled Emission
	EF	Units	(MMBtu/hr)	(hrs/yr)	(lb/hr)	(tpy)	(lb/hr)	(tpy)	
Formaldehyde	0.0528	lb/mmBtu	2.280	8760	0.120	0.527	0.120	0.527	EPA AP-42 Table 3.2-2
Acetaldehyde	0.00836	lb/mmBtu	2.280	8760	0.0191	0.0835	0.0191	0.0835	EPA AP-42 Table 3.2-2
Acrolein	0.00514	lb/mmBtu	2.280	8760	0.0117	0.0513	0.0117	0.0513	EPA AP-42 Table 3.2-2
Benzene	0.00044	lb/mmBtu	2.280	8760	0.00100	0.00439	0.00100	0.00439	EPA AP-42 Table 3.2-2
Ethylbenzene	0.0000397	lb/mmBtu	2.280	8760	0.0000905	0.000396	0.0000905	0.000396	EPA AP-42 Table 3.2-2
n-Hexane	0.00111	lb/mmBtu	2.280	8760	0.00253	0.0111	0.00253	0.0111	EPA AP-42 Table 3.2-2
Toluene	0.000408	lb/mmBtu	2.280	8760	0.000930	0.00407	0.000930	0.00407	EPA AP-42 Table 3.2-2
Xylene	0.000184	lb/mmBtu	2.280	8760	0.000420	0.00184	0.000420	0.00184	EPA AP-42 Table 3.2-2
				TOTAL HAP's:	0.156	0.684	0.156	0.684	

Sample Calculation

0.14 g/hp-hr * 269 hp / 453.59 (g/lb) * 8760 hr/yr / 2000 lb/ton = 0.364 tpy

Engine Emission Detail Sheet

Item	Value
Source Name:	GEN-12
Description:	Generator
QTY:	3 of 3
Make:	Capstone
Model:	Capstone C-200 NG
Serial Number:	TBD
Manufacture Date:	TBD
Fuel Type:	Natural Gas
Engine Type:	Turbine

Item	Value	Units	Source
Rated Horsepower:	269	hp	Manufacturer
Heat Rate:	2.28	MMBtu/hr	Manufacturer
Fuel Heat Value:	1162.2	Btu/scf	Gas Analysis
Emisson Controls:	None		
Control Efficiency:	0%		
Potential Operation:	8760	hr/yr	
Elevation:	6826	ft	
Sulfur Content	0.0	grains S/MMscf	Gas Analysis

Potential Emissions

Pollutant	Uncontrolled Emission Factor	Units	Nominal Rating	Hours of Operation	Uncontrolled Emissions		Controlled Emissions			Source of Controlled Emission Factor
	EF	Units	(hp)	(hrs/yr)	(lb/hr)	(tpy)	EF (g/hp-hr)	(lb/hr)	(tpy)	
NOx	0.14	g/hp-hr	269	8760	0.0830	0.364	0.14	0.0830	0.364	Manufacturer Data
VOC	0.034	g/hp-hr	269	8760	0.0202	0.0883	0.034	0.0202	0.0883	Manufacturer Data
CO	0.37	g/hp-hr	269	8760	0.219	0.961	0.37	0.219	0.961	Manufacturer Data
SO2	0.000588	lb/mmBtu	269	8760	0.00	0.00	0.000588	0.00	0.00	EPA AP-42 Table 3.2-2
PM10*	0.009987	lb/mmBtu	269	8760	0.0228	0.0997	0.0100	0.0228	0.0997	EPA AP-42 Table 3.2-2

HAPs	Uncontrolled	Units	Nominal	Hours of Operation	Uncontrolled Emissions		Controlled Emissions		Source of Uncontrolled Emission
	EF	Units	(MMBtu/hr)	(hrs/yr)	(lb/hr)	(tpy)	(lb/hr)	(tpy)	
Formaldehyde	0.0528	lb/mmBtu	2.280	8760	0.120	0.527	0.120	0.527	EPA AP-42 Table 3.2-2
Acetaldehyde	0.00836	lb/mmBtu	2.280	8760	0.0191	0.0835	0.0191	0.0835	EPA AP-42 Table 3.2-2
Acrolein	0.00514	lb/mmBtu	2.280	8760	0.0117	0.0513	0.0117	0.0513	EPA AP-42 Table 3.2-2
Benzene	0.00044	lb/mmBtu	2.280	8760	0.00100	0.00439	0.00100	0.00439	EPA AP-42 Table 3.2-2
Ethylbenzene	0.0000397	lb/mmBtu	2.280	8760	0.0000905	0.000396	0.0000905	0.000396	EPA AP-42 Table 3.2-2
n-Hexane	0.00111	lb/mmBtu	2.280	8760	0.00253	0.0111	0.00253	0.0111	EPA AP-42 Table 3.2-2
Toluene	0.000408	lb/mmBtu	2.280	8760	0.000930	0.00407	0.000930	0.00407	EPA AP-42 Table 3.2-2
Xylene	0.000184	lb/mmBtu	2.280	8760	0.000420	0.00184	0.000420	0.00184	EPA AP-42 Table 3.2-2
				TOTAL HAP's:	0.156	0.684	0.156	0.684	

Sample Calculation

0.14 g/hp-hr * 269 hp / 453.59 (g/lb) * 8760 hr/yr / 2000 lb/ton = 0.364 tpy

Loadout Emissions Detail Sheet

Equipment Source Name	OILLOAD-1	
Source Description	Oil Loadout	
QTY:	1 of 1	
Potential Throughput	1387000	bbl/yr

Potential Emissions

Pollutant	Estimated Emissions Potential lb/hr	tpy	Source of Emission Calculations
VOC	17.8	41.1	AP-42 Section 5.2.1

Molecular Weight of Vapors, MW	35.0	lb/lb-mol	Oil Lab Analysis	
True Vapor Pressure, Pva @ T	2.8	psia	AP-42 Table 7.1-2	
Temperature of Bulk Liquid Loaded, T	60	F	AP-42 Table 7.1-2	
	520	R		
Saturation Factor	0.6		AP-42 Table 5.2.1	
Efficiency of controlled loading (%)	0.0%			
Potential Annual Throughput, v	58,254	1000 gallons		
Loading losses, L @ tank	1.41	lb/1000 gallons		
L = 12.46 S P MW / T (1-eff)				
Potential annual losses @ tank, L*v	82,120.04	lb/yr		**41.1 tpy**
		HAPs Total:		1.09 tpy
				0.248 lb/hr
Max hourly fill rate	12.6	1000 gallons/hr	Trucking Company	
Max hourly emissions	**17.8**	**lb/hr**	Calculated	

Sample Calculation

1387000 bbl/yr * 42 gal/bbl / 1000 gal * 1.41 lb/1000 gal / 2000 lb/ton = 41.1 tpy

Fugitive Emissions Detail Sheet

Equipment Source Name: FUG-1
Source Description: Fugitives
Potential Operation: 8760 hr/yr
Emission Controls: None

Equipment Type	Wellhead	Separator	Heater Treater	Header	In-Line Heater	Meters, Piping	Compressors	Dehydrators	Oil Tanks
Equipment Count	**8**	**5**	**1**	**1**	**5**	**1**	**1**	**0**	**15**

Light Crude - Count per unit[1]	Wellhead	Separator	Heater Treater	Header	Oil Tanks
Valve	5	6	8	5	4
Flanges	10	12	12	10	8
Connectors	4	10	20	4	8
Open-Ended Lines	0	0	0	0	0
Other Components	1	0	0	0	2

Gas - Count per unit[2]	Wellhead	Separators	Meter/Piping	Compressors	In-Line Heaters	Dehydrators	Oil Tanks
Valve	11	34	14	73	14	24	1
Connectors	36	106	51	179	65	90	14
Open-Ended Lines	1	6	1	3	2	2	1
Pressure Relief Valves	0	2	1	4	1	2	1

Light Crude - Fugitive Emissions				
Equipment Type	Light Crude Leak Rate[3] (kg/hr/source)	Source Count	VOC Emission Rate (tpy)	VOC Emission Rate (lb/hr)
Valve	2.50E-03	143	3.45	0.788
Flanges	1.10E-04	282	0.300	0.0684
Connectors	2.10E-04	226	0.458	0.105
Open Ended Lines	1.40E-03	0	0.00	0.00
Other Components	7.50E-03	38	2.75	0.628
Totals			**6.96**	**1.59**
		HAP Total:	0.184	0.0420
		CO2 Total:	0.00	0.00
		CH4 Total:	1.72	0.393

Gas - Fugitive Emissions				
Equipment Type	Gas Leak Rate[3] (kg/hr/source)	Source Count	VOC Emission Rate (tpy)	VOC Emission Rate (lb/hr)
Valve	4.50E-03	430	6.19	1.41
Connectors	2.00E-04	1583	1.01	0.231
Open Ended Lines	2.00E-03	67	0.429	0.0978
Pressure Relief Valves[5]	8.80E-03	35	0.985	0.225
Totals			**8.61**	**1.97**
		HAP Total:	0.883	0.202
		H2S Total:	0.00	0.00
		CO2 Total:	0.213	0.0486
		CH4 Total:	13.3	3.04

Light Crude and Gas Combined Total		lb/hr	tpy
	VOC	3.56	15.6
	H2S	0.00	0.00
	HAPs	0.244	1.07

NOTES:
1 - Component counts taken from 40 CFR 98 Subpart W, Table W-1C, Western U.S. Oil tank component counts are estimated.
2 - Component counts taken from 40 CFR 98 Subpart W, Table W-1B, Western U.S. Oil tank component counts are estimated.
3 - Component leak rates taken from EPA's Oil and Gas Production Operations average equipment leak emission factors (EPA 453/R-95-017 dated November 1995) Table 2-4.
4 - In Tables 2-D and 2-E of the application form, these Light Crude Service equipment leaks emissions are combined with the Gas Service equipment leaks emissions.

Sample Calculation
0.00250 kg/hr-source * 143 Sources * 2.20462 lb/kg * 100 % VOC Wt% * 8760 hr/yr /2000 lb/ton = 3.45 tpy

** Assuming light crude weight percentage is 100% VOC to be conservative in light-crude fugitive emission calculations.

Compressor Blowdown Detail Sheet

Equipment Source Name:	COMP-1			
Equipment Name	Compressor			
QTY:	1 of 1			
Source Description	Reciprocating			
Equipment Usage	Reciprocating Compressor	Potential operation		8760 hr/yr
Equipment Make	TBD			
Equipment Model	TBD			
Serial Number	TBD	HAP weight fraction	0.03	

Potential Emissions

Pollutant	Emission Factor (Mscf/event)	Frequency (events/yr)	Estimated Emissions (ton/blowdown)	Estimated Emissions (lb/hr)	Estimated Emissions (tpy)	Source of Emission Factor
VOC	1.38	120	0.0116	0.318	1.39	Manufacturer Information
HAPs				0.0405	0.177	Manufacturer Information

Sample Calculation

1.380 Mscf/event X 1000 scf/Mscf / 379 scf/lb-mol X 6.37 lb/lb-mol** X 1/2000 lb/ton X 120 events/year = 1.39 tpy

** From Gas Analysis

Compressor Blowdown Detail Sheet

Equipment Source Name:	COMP-2			
Equipment Name	Compressor			
QTY:	1 of 1			
Source Description	Reciprocating			
Equipment Usage	Reciprocating Compressor	Potential operation		8760 hr/yr
Equipment Make	TBD			
Equipment Model	TBD			
Serial Number	TBD	HAP weight fraction	0.03	

Potential Emissions

Pollutant	Emission Factor (Mscf/event)	Frequency (events/yr)	Estimated Emissions (ton/blowdown)	Estimated Emissions (lb/hr)	Estimated Emissions (tpy)	Source of Emission Factor
VOC	0.139	24	0.00117	0.00640	0.0280	Manufacturer Information
HAPs				0.000816	0.00357	Manufacturer Information

Sample Calculation

0.139 Mscf/event X 1000 scf/Mscf / 379 scf/lb-mol X 6.37 lb/lb-mol** X 1/2000 lb/ton X 24 events/year = 0.03 tpy

** From Gas Analysis

Compressor Blowdown Detail Sheet

Equipment Source Name:	COMP-3			
Equipment Name	Compressor			
QTY:	1 of 1			
Source Description	Reciprocating			
Equipment Usage	Reciprocating Compressor	Potential operation		8760 hr/yr
Equipment Make	TBD			
Equipment Model	TBD			
Serial Number	TBD	HAP weight fraction	0.03	

Potential Emissions

Pollutant	Emission Factor (Mscf/event)	Frequency (events/yr)	Estimated Emissions (ton/blowdown)	Estimated Emissions (lb/hr)	Estimated Emissions (tpy)	Source of Emission Factor
VOC	0.520	120	0.00437	0.120	0.525	Manufacturer Information
HAPs				0.0153	0.0668	Manufacturer Information

Sample Calculation

0.520 Mscf/event X 1000 scf/Mscf / 379 scf/lb-mol X 6.37 lb/lb-mol** X 1/2000 lb/ton X 120 events/year = 0.52 tpy

** From Gas Analysis

Compressor Blowdown Detail Sheet

Equipment Source Name:	COMP-4			
Equipment Name	Compressor			
QTY:	1 of 1			
Source Description	Reciprocating			
Equipment Usage	Reciprocating Compressor	Potential operation		8760 hr/yr
Equipment Make	TBD			
Equipment Model	TBD			
Serial Number	TBD	HAP weight fraction	0.03	

Potential Emissions

Pollutant	Emission Factor (Mscf/event)	Frequency (events/yr)	Estimated Emissions (ton/blowdown)	Estimated Emissions (lb/hr)	Estimated Emissions (tpy)	Source of Emission Factor
VOC	0.139	24	0.00117	0.00640	0.0280	Manufacturer Information
HAPs				0.000816	0.00357	Manufacturer Information

Sample Calculation

0.139 Mscf/event X 1000 scf/Mscf / 379 scf/lb-mol X 6.37 lb/lb-mol** X 1/2000 lb/ton X 24 events/year = 0.03 tpy

** From Gas Analysis

Flare Detail Sheet

Equipment Source Name	FL-1		Stack Height:	20	ft
Source Description	Emergency Flare		Potential Operation:	8760	hr/yr
Equipment Make	TBD				
Equipment Model	TBD		Flare Pilot Rating:	0.10	MMBtu/hr
Serial Number	TBD		Pilot Heat Value:	1020	Btu/scf
Quantity	1 of 2				
Destruction Efficiency	95%				
Gas Heating Value[2]	1162.18	Btu/scf			
Gas Flow Rate[1]	300	scf/d			
Max Sulfur Content[3]	0.0	grains/MMscf			

Pilot Stream Emissions

Pollutant	Emission Factor (lb/MMBtu)	Estimated Emissions (lb/hr)	Estimated Emissions (tpy)	Source of Emission Factor
NOx	0.068	0.00680	0.0298	AP-42 Table 13.5-1
CO	0.310	0.0310	0.136	AP-42 Table 13.5-2

Waste Stream Emissions

Pollutant	Emission Factor (lb/MMBtu)	Flow Rate (scf/d)	Hrs of Operation (hrs/yr)	Estimated Emissions (lb/hr)	Estimated Emissions (tpy)	Source of Emission Factor
NOx	0.068	300	8760	0.0010	0.004	AP-42 Table 13.5-1
CO	0.31	300	8760	0.005	0.020	AP-42 Table 13.5-2
VOC	0.66	300	8760	0.010	0.04	AP-42 Table 13.5-2
SO2	N/A	300	8760	0.00	0.00	Engineering Calc.
PM10[4]	40	300	8760	0.00003	0.00014	AP-42 Table 13.5-1

Total Emissions

Pollutant	Estimated Emissions (lb/hr)	Estimated Emissions (tpy)
NOx	0.0078	0.034
CO	0.036	0.16
VOC	0.010	0.04
SO2	0.00	0.00
PM10[4]	0.00003	0.00014

Notes:

1 - Gas flow rate based on the worst-case actual monthly average for a single well at a similar site. Although the well may produce up to 4.0 MMscfd, only 0,300 scfd will be flared during emergencies.

2 - Gas heating value is from gas analysis #WP130059.

3 - Assumes natural gas has the same sulfur content as the engine fuel gas. This value is based on AP42 Chapter 3.2.

4 - PM10 emission factor in units of µg/L, assuming a lightly smoking flare.

Sample Calculation for NOx

0.068 lb/MMBtu * MMscf / 1,000,000 scf * 0,300 scf/day *1,162.18 Btu/scf / 24 hr/day = 0.0010 lb/hr

Flare Detail Sheet

Equipment Source Name	FL-2		Stack Height:	20	ft
Source Description	Emergency Flare		Potential Operation:	8760	hr/yr
Equipment Make	TBD				
Equipment Model	TBD		Flare Pilot Rating:	0.10	MMBtu/hr
Serial Number	TBD		Pilot Heat Value:	1020	Btu/scf
Quantity	2 of 2				
Destruction Efficiency	95%				
Gas Heating Value[2]	1162.18	Btu/scf			
Gas Flow Rate[1]	300	scf/d			
Max Sulfur Content[3]	0.0	grains/MMscf			

Pilot Stream Emissions

Pollutant	Emission Factor (lb/MMBtu)	Estimated Emissions (lb/hr)	Estimated Emissions (tpy)	Source of Emission Factor
NOx	0.068	0.00680	0.0298	AP-42 Table 13.5-1
CO	0.310	0.0310	0.136	AP-42 Table 13.5-2

Waste Stream Emissions

Pollutant	Emission Factor (lb/MMBtu)	Flow Rate (scf/d)	Hrs of Operation (hrs/yr)	Estimated Emissions (lb/hr)	Estimated Emissions (tpy)	Source of Emission Factor
NOx	0.068	300	8760	0.0010	0.004	AP-42 Table 13.5-1
CO	0.31	300	8760	0.005	0.020	AP-42 Table 13.5-2
VOC	0.66	300	8760	0.010	0.04	AP-42 Table 13.5-2
SO2	N/A	300	8760	0.00	0.00	Engineering Calc.
PM10[4]	40	300	8760	0.00003	0.00014	AP-42 Table 13.5-1

Total Emissions

Pollutant	Estimated Emissions (lb/hr)	Estimated Emissions (tpy)
NOx	0.0078	0.034
CO	0.036	0.16
VOC	0.010	0.04
SO2	0.00	0.00
PM10[4]	0.00003	0.00014

Notes:

1 - Gas flow rate based on the worst-case actual monthly average for a single well at a similar site. Although the well may produce up to 4.0 MMscfd, only 0,300 scfd will be flared during emergencies.

2 - Gas heating value is from gas analysis #WP130059.

3 - Assumes natural gas has the same sulfur content as the engine fuel gas. This value is based on AP42 Chapter 3.2.

4 - PM10 emission factor in units of µg/L, assuming a lightly smoking flare.

Sample Calculation for NOx

0.068 lb/MMBtu * MMscf / 1,000,000 scf * 0,300 scf/day *1,162.18 Btu/scf / 24 hr/day = 0.0010 lb/hr

Fugitive Dust Emissions Detail Sheet

Equipment Source Name: ROAD-1
Source Description: Road Dust
Potential Operation: 8760 hr/yr
Emission Controls: None

Potential Emissions

Pollutant	Estimated Emissions Potential lb/hr	tpy	Source of Emission Calculations
PM30*	5.95	7.52	AP-42 Section 13.2.2
PM10	1.52	1.92	AP-42 Section 13.2.2
PM 2.5	0.152	0.192	AP-42 Section 13.2.2

* Assumed equivalent to total suspended particulate matter (TSP)

Mean Vehicle Weight (W)	18.8	tons	Engineering Calculation
Surface Material Silt Content (s)	4.8	%	Per Kathleen Primm, 1/28/16 AQB email
Mean # of Days with > 0.01 inch of precipitation	70	Days	Per Kathleen Primm, 1/28/16 AQB email
Estimated Oil Production	3800	bbl/day	
Estimated Produced Water Production	2000	bbl/day	

Tech Truck[1]

5000	lb
30	visits/month
7.49	miles/month

Oil Hauler[2]

40329	lb
46	visits/300 BOPD
582.7	visits/month
145.5	miles/month

Produced Water Hauler[3]

36402	lb
55	visits/250 BWPD
440.0	visits/month
109.9	miles/month

Fugitive Dust (PM30) per mile traveled	4.77	lb/VMT	AP-42 Eqn 13.2.2-1a
Fugitive Dust (PM10) per mile traveled	1.21	lb/VMT	AP-42 Eqn 13.2.2-1a
Fugitive Dust (PM2.5) per mile traveled	0.12	lb/VMT	AP-42 Eqn 13.2.2-1a
Vehicle miles traveled	0.25	miles/trip	Engineering Assumption
Total Vehicle Miles	3154.42	miles/yr	
Max Hourly Vehicle Visits[5]	5.00	visits/hr	
Max Hourly Vehicle Miles	1.25	miles/hr	

Notes:
1 - Based on the weight of a Ford F-150
2 - Based on the assumption each hauler can carry 200 bbls of oil per visit
3 - Based on the assumption each hauler can carry 140 bbls of produced water per visit
4 - NGL Hauler will haul contents offsite every other day
5 - Based on the assumption hauler trucks operate 8 hr/day

Sample Calculation
1.21 lb/VMT * 3154.42 miles/yr / 2000 lb/ton = 1.92 tpy

Gas Analysis

Gas Constituent	Molecular Weight (lb/lb-mol)	Mole %	Weight (lb/lbmole Gas)	Weight %	Total HC Corrected Weight * %	Total VOC Corrected Weight ** %
Methane	16.04	61.35%	9.84	41.17%	51.15%	NA
Ethane	30.07	10.07%	3.03	12.66%	15.73%	NA
Total HC (Non-VOC)		71.42%		53.83%	66.88%	NA
Propane	44.10	7.24%	3.19	13.36%	16.60%	50.12%
Iso-Butane	58.12	0.85%	0.49	2.06%	2.56%	7.74%
N-Butane	58.12	2.32%	1.35	5.63%	7.00%	21.12%
Iso-Pentane	72.15	0.49%	0.35	1.47%	1.83%	5.51%
N-Pentane	72.15	0.46%	0.33	1.40%	1.74%	5.25%
Hexanes +	84.18	0.78%	0.65	2.73%	3.39%	10.25%
Total NMNE VOC		12.14%	6.37	26.66%	**33.12%**	100.00%
Total HAPs		0.78%	0.65	2.73%	**3.39%**	**10.25%**
Hydrogen Sulfide	34.08	0.00%	0.00	0.00%	NA	NA
Carbon Dioxide	44.01	0.36%	0.16	0.66%	NA	NA
Nitrogen	28.01	16.09%	4.51	18.85%	NA	NA
Totals		100.00%	23.91	100.00%	100.00%	

Average Molecular Weight of VOCs: **52.52 lb/lb-mol**

Notes:

* Weight Percent corrected to remove Carbon Dioxide,Nitrogen, and H2S content.

** Weight Percent corrected to remove non-VOC content.

Oil Flash Gas Composition

Liquid Constituent	Molecular Weight (lb/lb-mol)	Mole %	Weight (lb/lbmole Liquid)	Weight %	Total VOC Corrected Weight * %
Methane	16.04	36.09%	5.79	16.53%	NA
Ethane	30.07	19.34%	5.82	16.61%	NA
Total HC (Non-VOC)		55.43%	11.60	33.14%	NA
Propane	44.10	25.75%	11.36	32.43%	48.50%
Iso-Butane	58.12	3.46%	2.01	5.74%	8.59%
N-Butane	58.12	9.96%	5.79	16.53%	24.72%
Iso-Pentane	72.15	2.11%	1.53	4.36%	6.51%
N-Pentane	72.15	2.01%	1.45	4.13%	6.18%
i-Hexanes	86.16	0.00%	0.00	0.00%	0.00%
Heptanes	100.20	0.37%	0.37	1.06%	1.59%
Octanes	114.23	0.12%	0.13	0.38%	0.57%
Nonanes	128.28	0.02%	0.03	0.08%	0.12%
Decanes+	269.61	0.05%	0.13	0.38%	0.56%
Benzene	78.11	0.04%	0.03	0.10%	0.15%
Toluene	92.13	0.03%	0.03	0.09%	0.13%
Ethylbenzene	106.17	0.00%	0.00	0.01%	0.01%
Xylenes	106.17	0.01%	0.01	0.03%	0.05%
n-Hexane	86.18	0.63%	0.54	1.54%	2.30%
2-2-4 TMP	114.24	0.00%	0.00	0.00%	0.00%
Total NMNE VOC		44.57%	23.41	66.86%	100.00%
Total HAPs		0.72%	0.62	1.77%	2.64%
Hydrogen Sulfide	34.08	0.00%	0.00	0.00%	NA
Carbon Dioxide	44.01	0.00%	0.00	0.00%	NA
Nitrogen	28.01	0.00%	0.00	0.00%	NA
Totals		100.00%	35.02	100.00%	100.00%

* Weight Percent corrected to remove non-VOC content.

Produced Water Flash Gas

Liquid Constituent	Molecular Weight (lb/lb-mol)	Mole %	Weight (lb/lbmole Liquid)	Weight %	Total VOC Corrected Weight * %
Methane	16.04	62.32%	10.00	43.04%	NA
Ethane	30.07	10.93%	3.29	14.15%	NA
Total HC (Non-VOC)		73.25%	13.28	57.20%	NA
Propane	44.10	5.05%	2.23	9.59%	61.82%
Iso-Butane	58.12	0.37%	0.21	0.91%	5.89%
N-Butane	58.12	1.04%	0.61	2.61%	16.80%
Iso-Pentane	72.15	0.17%	0.12	0.53%	3.43%
N-Pentane	72.15	0.14%	0.10	0.43%	2.78%
i-Hexanes	86.16	0.07%	0.06	0.25%	1.60%
Heptanes	100.20	0.05%	0.05	0.21%	1.36%
Octanes	114.23	0.04%	0.05	0.22%	1.40%
Nonanes	128.28	0.02%	0.03	0.12%	0.75%
Decanes+	142.29	0.05%	0.06	0.28%	1.78%
Benzene	78.11	0.03%	0.02	0.09%	0.61%
Toluene	92.13	0.04%	0.03	0.15%	0.95%
Ethylbenzene	106.17	0.00%	0.00	0.01%	0.06%
Xylenes	106.17	0.02%	0.02	0.07%	0.44%
n-Hexane	86.18	0.01%	0.01	0.05%	0.34%
2-2-4 TMP	114.24	0.00%	0.00	0.00%	0.00%
Total NMNE VOC		7.09%	3.60	15.51%	100.00%
Total HAPs		0.10%	0.09	0.37%	2.39%
Hydrogen Sulfide	34.08	0.00%	0.00	0.00%	NA
Carbon Dioxide	44.01	5.18%	2.28	9.82%	NA
Nitrogen	28.01	14.49%	4.06	17.48%	NA
Totals		100.00%	23.22	100.00%	100.00%

* Weight Percent corrected to remove non-VOC content.

Condensate Flash Gas Composition

Liquid Constituent	Molecular Weight (lb/lb-mol)	Mole %	Weight (lb/lbmole Liquid)	Weight %	Total VOC Corrected Weight * %
Methane	16.04	0.00%	0.00	0.00%	NA
Ethane	30.07	5.70%	1.71	2.52%	NA
Total HC (Non-VOC)		5.70%	1.71	2.52%	NA
Propane	44.10	15.99%	7.05	10.34%	10.61%
Iso-Butane	58.12	9.80%	5.70	8.36%	8.57%
N-Butane	58.12	16.29%	9.47	13.89%	14.25%
Iso-Pentane	72.15	14.60%	10.53	15.45%	15.85%
N-Pentane	72.15	10.09%	7.28	10.68%	10.96%
i-Hexanes	86.16		0.00	0.00%	0.00%
Heptanes	100.20	8.23%	8.25	12.10%	12.41%
Octanes	114.23	3.38%	3.86	5.66%	5.81%
Nonanes	128.28	0.65%	0.84	1.23%	1.26%
Decanes+	142.29	0.30%	0.43	0.63%	0.65%
Benzene	78.11	1.48%	1.15	1.69%	1.74%
Toluene	92.13	2.18%	2.01	2.94%	3.02%
Ethylbenzene	106.17	0.06%	0.07	0.10%	0.10%
Xylenes	106.17	0.58%	0.61	0.90%	0.92%
n-Hexane	86.18	10.68%	9.20	13.50%	13.85%
2-2-4 TMP	114.24	0.00%	0.00	0.00%	0.00%
Total NMNE VOC		94.30%	66.44	97.48%	100.00%
Total HAPs		14.97%	13.04	19.13%	19.63%
Hydrogen Sulfide	34.08	0.00%	0.00	0.00%	NA
Carbon Dioxide	44.01	0.00%	0.00	0.00%	NA
Nitrogen	28.01	0.00%	0.00	0.00%	NA
Totals		100.00%	68.15	100.00%	100.00%

* Weight Percent corrected to remove non-VOC content.

Reciprocating Compressors

Volumetric GHG Emissions from Reciprocating Compressors @ 68 F and 14.7 psi

Pollutant	Number of Compressors	Number of Cylinders	Emission Factor scf/Comp./yr[(a)]	Total Volume scf/yr	Density kg/ft^3[(b)]	Global Warming Potential[(c)]	CO_2e (ton/yr)
CH_4	1	4	9480	9480	0.0192	25	5.02
CO2	1		527	527	0.0526	1	0.03

(a) 40 CFR Part 98 Subpart W, Equation W-29

(b) 40 CFR Part 98 Subpart W, Equation W-36

(c) 40 CFR Part 98 Subpart A, Table A-1

TOTAL	5.05

Section 6

Information Used To Determine Emissions

Information Used to Determine Emissions

Check the box for each type of information submitted:

- ☒ If manufacturer data are used, include specifications for emissions units and control equipment, including control efficiencies specifications and sufficient engineering data for verification of control equipment operation, including design drawings, test reports, and design parameters that affect normal operation.
- ☐ If test data are used, include a copy of the complete test report. If the test data are for an emissions unit other than the one being permitted, the emission units must be identical. Test data may not be used if any difference in operating conditions of the unit being permitted and the unit represented in the test report significantly effect emission rates.
- ☒ If the most current copy of AP-42 is used, reference the section and date located at the bottom of the page. Include a copy of the page containing the emissions factors, and clearly mark the factors used in the calculations.
- ☐ If an older version of AP-42 is used, include a complete copy of the section.
- ☐ If an EPA document or other material is referenced, include a complete copy.
- ☐ Fuel specifications sheet.
- ☐ If computer models are used to estimate emissions, include an input summary and a detailed report, and a disk containing the input file used to run the model.
- ☒ For tank-flashing emissions, include a discussion of the method used to estimate tank-flashing emissions, accuracy of the model, the input and output summary from simulation models and software, all calculations, documentation of any assumptions used, descriptions of sampling methods and conditions, copies of any lab sample analysis. See example of input and output summary here: https://www.env.nm.gov/aqb/permit/Permit_Apps/AirQualityPermitNOIApplication.html

- ☒ If requesting to use a representative gas sample, include a discussion of why the sample is representative for this facility and an explanation of how it is representative (e.g., same reservoir, same similar API gravity, similar composition).

Information included in this section:

1. Compressor engine information
2. Vapor Recovery Tank E&P Tanks v3.0 information
3. Oil Tank EPA TANKS 4.0.9d information
4. Produced Water Tank EPA TANKS 4.0.9d information
5. Vapor Recovery Unit (VRU) information
6. Separator Heater information
7. Generator information
8. AP-42 Tables/Figures/Equations:
    a. Table 1.4-1,1.4-2,1.4-3 – Heaters
    b. Table 3.2-2 – Lean Burn Engines
    c. Table 3.2-3 – Rich Burn Engines
    d. Table 5.2-1 – Loadout
    e. Table 7.1-2 – Loadout
    f. Table 13.5-1 & Table 13.5-2 – Flare
    g. Table 13.2.2-3, Figure 13.2.2-1, Equation 13.2.2-1a – Road Dust
9. 40 CFR 98 Subpart W, Tables W-1A and W-1C – Fugitives
10. Department Accepted Values For: Aggregate Handling, Storage Pile and Haul Road Emissions
11. Gas analytical data
12. Produced water analytical data
13. Oil analytical data

ED_004016Q_00002229-00097

G3508B LE Gas Petroleum Engine

515 bkW (690 bhp)
1400 rpm

0.5 g/bhp-hr NOx or 1.0 g/bhp-hr NOx (NTE)

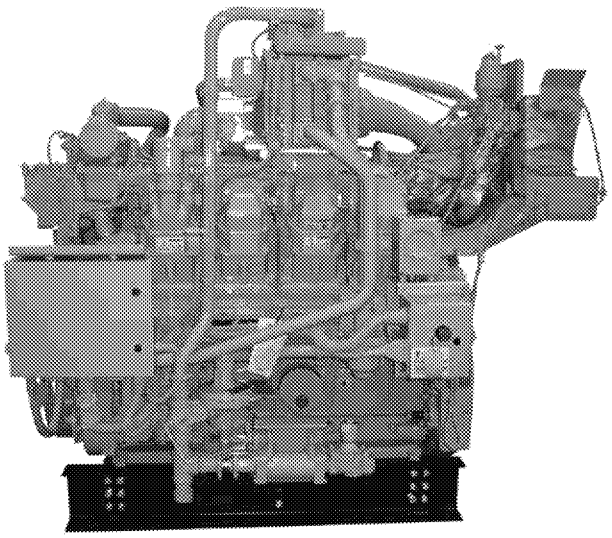

CAT® ENGINE SPECIFICATIONS

V-8, 4-Stroke-Cycle

Bore	170 mm (6.7 in.)
Stroke	190 mm (7.5 in.)
Displacement	34.6 L (2115 cu. in.)
Aspiration	Turbocharged-2 Stage Aftercooled
Digital Engine Management Governor and Protection	Electronic (ADEM™ A3)
Combustion	Low Emissions (Lean Burn)
Engine Weight net dry (approx)	3941 kg (8688 lb)
Power Density	7.7 kg/kW (12.6 lb/hp)
Power per Displacement	19.9 bhp/L
Total Cooling System Capacity	130.5 L (34.4 gal)
Jacket Water	119 L (31.4 gal)
Aftercooler Circuit	11.5 L (3 gal)
Lube Oil System (refill)	220 L (58 gal)
Oil Change Interval	1000 hours
Rotation (from flywheel end)	Counterclockwise
Flywheel and Flywheel Housing	SAE No. 00
Flywheel Teeth	183

FEATURES

Engine Design
- Built on G3500 LE proven reliability and durability
- Ability to burn a wide spectrum of gaseous fuels
- Robust diesel strength design prolongs life and lowers owning and operating costs
- Broad operating speed range at lower site air densities (high altitude/hot ambient temperatures)
- Higher power density improves fleet management
- Quality engine diagnostics
- Detonation-sensitive timing control for individual cylinders

Ultra Lean Burn Technology (ULB)
ULB technology uses an advanced control system, a better turbo match, improved air and fuel mixing, and a more sophisticated combustion recipe to provide:
- Lowest engine-out emissions
- Highest fuel efficiency
- Improved altitude and speed turndown
- Stable load acceptance and load rejection

Emissions
- Meets U.S. EPA Spark Ignited Stationary NSPS emissions for 2010 and some non-attainment areas
- Lean air/fuel mixture provides best available emissions and fuel efficiency for engines of this bore size

Advanced Digital Engine Management
ADEM A3 engine management system integrates speed control, air/fuel ratio control, and ignition/detonation controls into a complete engine management system. ADEM A3 has improved: user interface, display system, shutdown controls, and system diagnostics.

Full Range of Attachments
Large variety of factory-installed engine attachments reduces packaging time.

Testing
Every engine is full-load tested to ensure proper engine performance.

Gas Engine Rating Pro
GERP is a PC-based program designed to provide site performance capabilities for Cat® natural gas engines for the gas compression industry. GERP provides engine data for your site's altitude, ambient temperature, fuel, engine coolant heat rejection, performance data, installation drawings, spec sheets, and pump curves.

Product Support Offered Through Global Cat Dealer Network
More than 2,200 dealer outlets

Cat factory-trained dealer technicians service every aspect of your petroleum engine

Cat parts and labor warranty

Preventive maintenance agreements available for repair-before-failure options

S•O•S℠ program matches your oil and coolant samples against Caterpillar set standards to determine:
- Internal engine component condition
- Presence of unwanted fluids
- Presence of combustion by-products
- Site-specific oil change interval

Over 80 Years of Engine Manufacturing Experience
Over 60 years of natural gas engine production

Ownership of these manufacturing processes enables Caterpillar to produce high quality, dependable products
- Cast engine blocks, heads, cylinder liners, and flywheel housings
- Machine critical components
- Assemble complete engine

Web Site
For all your petroleum power requirements, visit www.catoilandgas.cat.com.

G3508B

GAS COMPRESSION APPLICATION

GAS ENGINE SITE SPECIFIC TECHNICAL DATA
G3508ULB-Aaron Alvarez

CATERPILLAR®

ENGINE SPEED (rpm):	1400	RATING STRATEGY:	STANDARD
COMPRESSION RATIO:	8:1	RATING LEVEL:	CONTINUOUS
AFTERCOOLER TYPE:	SCAC	FUEL SYSTEM:	CAT WIDE RANGE WITH AIR FUEL RATIO CONTROL
AFTERCOOLER - STAGE 2 INLET (°F):	130		
AFTERCOOLER - STAGE 1 INLET (°F):	201	**SITE CONDITIONS:**	
JACKET WATER OUTLET (°F):	203	FUEL:	Nat Gas
ASPIRATION:	TA	FUEL PRESSURE RANGE(psig):	7.0-40.0
COOLING SYSTEM:	JW+OC+1AC, 2AC	FUEL METHANE NUMBER:	84.8
CONTROL SYSTEM:	ADEM3	FUEL LHV (Btu/scf):	905
EXHAUST MANIFOLD:	DRY	ALTITUDE(ft):	500
COMBUSTION:	LOW EMISSION	MAXIMUM INLET AIR TEMPERATURE(°F):	100
NOx EMISSION LEVEL (g/bhp-hr NOx):	0.5	STANDARD RATED POWER:	690 bhp@1400rpm
SET POINT TIMING:	30		

				MAXIMUM RATING	SITE RATING AT MAXIMUM INLET AIR TEMPERATURE		
RATING		**NOTES**	**LOAD**	**100%**	**100%**	**75%**	**50%**
ENGINE POWER	(WITHOUT FAN)	(1)	bhp	690	690	517	345
INLET AIR TEMPERATURE			°F	100	100	100	100
ENGINE DATA							
FUEL CONSUMPTION (LHV)		(2)	Btu/bhp-hr	7395	7395	7849	8535
FUEL CONSUMPTION (HHV)		(2)	Btu/bhp-hr	8203	8203	8707	9468
AIR FLOW (@inlet air temp, 14.7 psia)	(WET)	(3)(4)	ft3/min	1665	1664	1291	898
AIR FLOW	(WET)	(3)(4)	lb/hr	7073	7073	5491	3817
FUEL FLOW (60°F, 14.7 psia)			scfm	94	94	75	54
INLET MANIFOLD PRESSURE		(5)	in Hg(abs)	95.3	95.3	77.0	54.1
EXHAUST TEMPERATURE - ENGINE OUTLET		(6)	°F	931	931	929	999
EXHAUST GAS FLOW (@engine outlet temp, 14.5 psia)	(WET)	(7)(4)	ft3/min	4455	4455	3458	2531
EXHAUST GAS MASS FLOW	(WET)	(7)(4)	lb/hr	7330	7330	5695	3965
EMISSIONS DATA - ENGINE OUT							
NOx (as NO2)		(8)(9)	g/bhp-hr	0.50	0.50	0.50	0.50
CO		(8)(9)	g/bhp-hr	2.58	2.58	2.75	2.71
THC (mol. wt. of 15.84)		(8)(9)	g/bhp-hr	5.49	5.49	5.81	5.59
NMHC (mol. wt. of 15.84)		(8)(9)	g/bhp-hr	0.82	0.82	0.87	0.84
NMNEHC (VOCs) (mol. wt. of 15.84)		(8)(9)(10)	g/bhp-hr	0.55	0.55	0.58	0.56
HCHO (Formaldehyde)		(8)(9)	g/bhp-hr	0.42	0.42	0.46	0.48
CO2		(8)(9)	g/bhp-hr	477	477	505	547
EXHAUST OXYGEN		(8)(11)	% DRY	9.3	9.3	9.0	8.5
HEAT REJECTION							
HEAT REJ. TO JACKET WATER (JW)		(12)	Btu/min	10787	10787	9234	8396
HEAT REJ. TO ATMOSPHERE		(12)	Btu/min	3498	3498	2915	2332
HEAT REJ. TO LUBE OIL (OC)		(12)	Btu/min	2650	2650	2405	2103
HEAT REJ. TO A/C - STAGE 1 (1AC)		(12)(13)	Btu/min	5988	5988	5102	1965
HEAT REJ. TO A/C - STAGE 2 (2AC)		(12)(13)	Btu/min	3222	3222	2991	1848
COOLING SYSTEM SIZING CRITERIA							
TOTAL JACKET WATER CIRCUIT (JW+OC+1AC)		(13)(14)	Btu/min	21333			
TOTAL AFTERCOOLER CIRCUIT (2AC)		(13)(14)	Btu/min	3383			
A cooling system safety factor of 0% has been added to the cooling system sizing criteria.							

CONDITIONS AND DEFINITIONS

Engine rating obtained and presented in accordance with ISO 3046/1, adjusted for fuel, site altitude and site inlet air temperature. 100% rating at maximum inlet air temperature is the maximum engine capability for the specified fuel at site altitude and maximum site inlet air temperature. Max. rating is the maximum capability for the specified fuel at site altitude and reduced inlet air temperature. Lowest load point is the lowest continuous duty operating load allowed. No overload permitted at rating shown.

For notes information consult page three.

PREPARED BY: Bradley Johnson, Compressor Systems Inc.
Data generated by Gas Engine Rating Pro Version 4.06.01
Ref. Data Set DM8826-03-001, Printed 20Feb2014

Engine Power vs. Inlet Air Temperature

Data represents temperature sweep at 500 ft and 1400 rpm

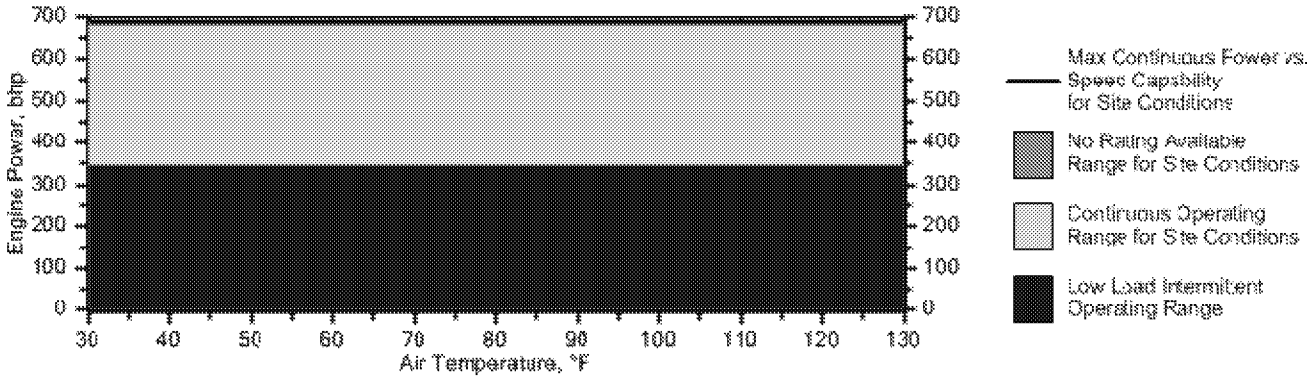

Engine Power vs. Engine Speed

Data represents speed sweep at 500 ft and 100 °F

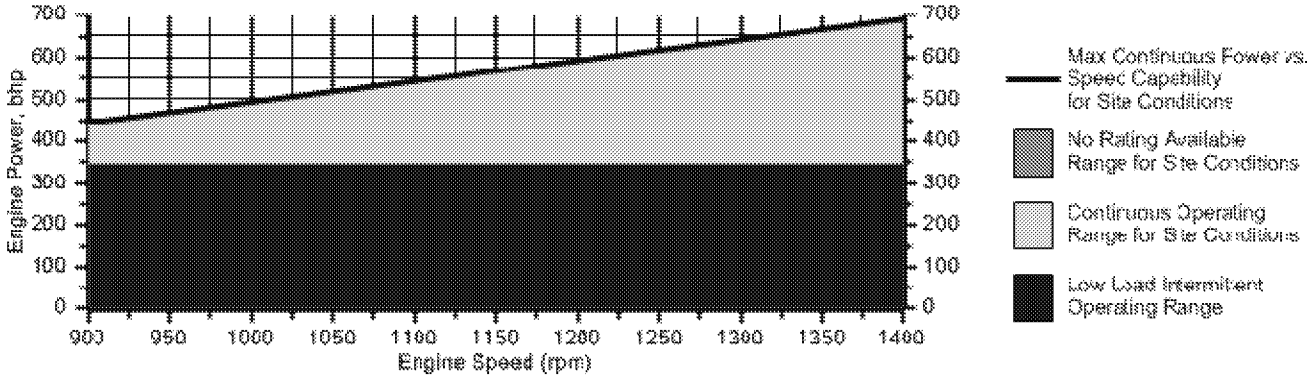

Engine Torque vs. Engine Speed

Data represents speed sweep at 500 ft and 100 °F

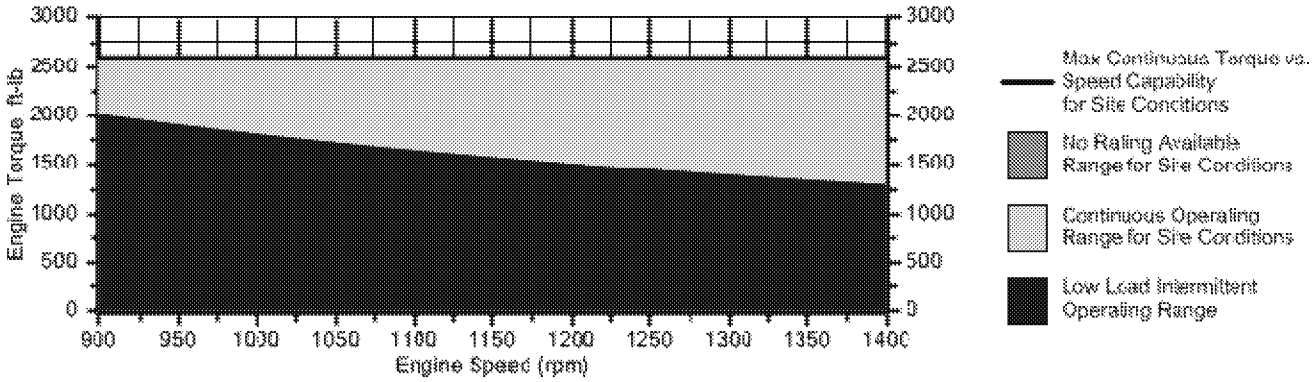

Note: At site conditions of 500 ft and 100°F inlet air temp., constant torque can be maintained down to 900 rpm. The minimum speed for loading at these conditions is 900 rpm.

NOTES

1. Engine rating is with two engine driven water pumps. Tolerance is ± 3% of full load.

2. Fuel consumption tolerance is ± 3.0% of full load data.

3. Air flow value is on a 'wet' basis. Flow is a nominal value with a tolerance of ± 5 %.

4. Inlet and Exhaust Restrictions must not exceed A&I limits based on full load flow rates from the standard technical data sheet.

5. Inlet manifold pressure is a nominal value with a tolerance of ± 5 %.

6. Exhaust temperature is a nominal value with a tolerance of (+)63°F, (-)54°F.

7. Exhaust flow value is on a "wet" basis. Flow is a nominal value with a tolerance of ± 6 %.

8. Emissions data is at engine exhaust flange prior to any after treatment.

9. Emission values are based on engine operating at steady state conditions. Fuel methane number cannot vary more than ± 3. Values listed are higher than nominal levels to allow for instrumentation, measurement, and engine-to-engine variations. They indicate "Not to Exceed" values. THC, NMHC, and NMNEHC do not include aldehydes. An oxidation catalyst may be required to meet Federal, State or local CO or HC requirements.

10. VOCs - Volatile organic compounds as defined in US EPA 40 CFR 60, subpart JJJJ

11. Exhaust Oxygen level is the result of adjusting the engine to operate at the specified NOx level. Tolerance is ± 0.5.

12. Heat rejection values are nominal. Tolerances, based on treated water, are ± 10% for jacket water circuit, ± 50% for radiation, ± 20% for lube oil circuit, and ± 5% for aftercooler circuit.

13. Aftercooler heat rejection includes an aftercooler heat rejection factor for the site elevation and inlet air temperature specified. Aftercooler heat rejection values at part load are for reference only. Do not use part load data for heat exchanger sizing.

14. Cooling system sizing criteria are maximum circuit heat rejection for the site, with applied tolerances.

Constituent	Abbrev	Mole %	Norm
Water Vapor	H2O	0.0000	0.0000
Methane	CH4	92.2700	92.2700
Ethane	C2H6	2.5000	2.5000
Propane	C3H8	0.5000	0.5000
Isobutane	iso-C4H1O	0.0000	0.0000
Norbutane	nor-C4H1O	0.2000	0.2000
Isopentane	iso-C5H12	0.0000	0.0000
Norpentane	nor-C5H12	0.1000	0.1000
Hexane	C6H14	0.0500	0.0500
Heptane	C7H16	0.0000	0.0000
Nitrogen	N2	3.4800	3.4800
Carbon Dioxide	CO2	0.9000	0.9000
Hydrogen Sulfide	H2S	0.0000	0.0000
Carbon Monoxide	CO	0.0000	0.0000
Hydrogen	H2	0.0000	0.0000
Oxygen	O2	0.0000	0.0000
Helium	HE	0.0000	0.0000
Neopentane	neo-C5H12	0.0000	0.0000
Octane	C8H18	0.0000	0.0000
Nonane	C9H20	0.0000	0.0000
Ethylene	C2H4	0.0000	0.0000
Propylene	C3H6	0.0000	0.0000
TOTAL (Volume %)		100.0000	100.0000

Fuel Makeup:	Nat Gas
Unit of Measure:	English

Calculated Fuel Properties

Caterpillar Methane Number:	84.8
Lower Heating Value (Btu/scf):	905
Higher Heating Value (Btu/scf):	1004
WOBBE Index (Btu/scf):	1168
THC: Free Inert Ratio:	21.83
Total % Inerts (% N2, CO2, He):	4.38%
RPC (%) (To 905 Btu/scf Fuel):	100%
Compressibility Factor:	0.998
Stoich A/F Ratio (Vol/Vol):	9.45
Stoich A/F Ratio (Mass/Mass):	15.75
Specific Gravity (Relative to Air):	0.600
Specific Heat Constant (K):	1.313

CONDITIONS AND DEFINITIONS

Caterpillar Methane Number represents the knock resistance of a gaseous fuel. It should be used with the Caterpillar Fuel Usage Guide for the engine and rating to determine the rating for the fuel specified. A Fuel Usage Guide for each rating is included on page 2 of its standard technical data sheet.

RPC always applies to naturally aspirated (NA) engines, and turbocharged (TA or LE) engines only when they are derated for altitude and ambient site conditions.

Project specific technical data sheets generated by the Caterpillar Gas Engine Rating Pro program take the Caterpillar Methane Number and RPC into account when generating a site rating.

Fuel properties for Btu/scf calculations are at 60F and 14.696 psia.

Caterpillar shall have no liability in law or equity, for damages, consequently or otherwise, arising from use of program and related material or any part thereof.

FUEL LIQUIDS

Field gases, well head gases, and associated gases typically contain liquid water and heavy hydrocarbons entrained in the gas. To prevent detonation and severe damage to the engine, hydrocarbon liquids must not be allowed to enter the engine fuel system. To remove liquids, a liquid separator and coalescing filter are recommended, with an automatic drain and collection tank to prevent contamination of the ground in accordance with local codes and standards.

To avoid water condensation in the engine or fuel lines, limit the relative humidity of water in the fuel to 80% at the minimum fuel operating temperature.

DCL America Inc.

1610 Woodstead Ct Suite 245, The Woodlands, Texas, 77380 USA
Tel: 877-897-9759 *Fax:* 281-605-5858 info@dcl-inc.com www.dcl-inc.com

To	Jerry Mason	**Phone**	
	ISC	**Fax**	
Date	17 January 2014	**Email**	Jerry.Mason@ignition-systems.com

RE: EMISSIONS GUARANTEE

Jerry,

We hereby guarantee that our QUICK-LID® Model DC63-10 catalytic converter described below:

Catalyst model	DC63
Catalyst coating	Oxidation, Q
Outside Diameter of catalyst substrate	20.4"
No. of catalyst substrates	1
Cell Density	300 cpsi

and sized for the following engine:

Engine model	CAT G3508ULB
Power	690 bhp@1400 rpm
Fuel	Pipeline Quality Natural Gas
Approx. Exhaust Flow	3735 acfm
Approx. Exhaust Temperature	840˚F

will perform as follows:

Exhaust Gas Component	Converter Efficiency (% Reduction)
CO	93
VOC	75
Formaldehyde	76

for a period of 1 year or 8000 hours, whichever comes first, subject to all terms and conditions contained in the attached warranty document being respected and met.

Best regards,
DCL America, Inc.

William Casolara
Senior Sales Engineer
North American Industrial Catalyst Division

G3508B

GAS COMPRESSION APPLICATION

GAS ENGINE SITE SPECIFIC TECHNICAL DATA

CATERPILLAR®

ENGINE SPEED (rpm):	1400	RATING STRATEGY:	STANDARD
COMPRESSION RATIO:	8	RATING LEVEL:	CONTINUOUS
AFTERCOOLER TYPE:	SCAC	FUEL SYSTEM:	CAT WIDE RANGE WITH AIR FUEL RATIO CONTROL
AFTERCOOLER - STAGE 2 INLET (°F):	130		
AFTERCOOLER - STAGE 1 INLET (°F):	201	**SITE CONDITIONS:**	
JACKET WATER OUTLET (°F):	203	FUEL:	Propane
ASPIRATION:	TA	FUEL PRESSURE RANGE(psig): (See note 1)	7.0-40.0
COOLING SYSTEM:	JW+OC+1AC, 2AC	FUEL METHANE NUMBER:	32.9
CONTROL SYSTEM:	ADEM3	FUEL LHV (Btu/scf):	2299
EXHAUST MANIFOLD:	DRY	ALTITUDE(ft):	500
COMBUSTION:	LOW EMISSION	MAXIMUM INLET AIR TEMPERATURE(°F):	77
NOx EMISSION LEVEL (g/bhp-hr NOx):	0.5	STANDARD RATED POWER:	690 bhp@1400rpm
SET POINT TIMING:	25		

				MAXIMUM RATING	SITE RATING AT MAXIMUM INLET AIR TEMPERATURE		
RATING		**NOTES**	**LOAD**	**100%**	**100%**	**75%**	**55%**
ENGINE POWER	(WITHOUT FAN)	(2)	bhp	633	633	475	345
INLET AIR TEMPERATURE			°F	77	77	77	77
ENGINE DATA							
FUEL CONSUMPTION (LHV)		(3)	Btu/bhp-hr	7465	7465	7924	8491
FUEL CONSUMPTION (HHV)		(3)	Btu/bhp-hr	8116	8116	8614	9230
AIR FLOW (@inlet air temp, 14.7 psia)	(WET)	(4)(5)	ft3/min	1431	1431	1111	833
AIR FLOW	(WET)	(4)(5)	lb/hr	6343	6343	4924	3693
FUEL FLOW (60°F, 14.7 psia)			scfm	34	34	27	21
INLET MANIFOLD PRESSURE		(6)	in Hg(abs)	84.0	84.0	67.9	51.3
EXHAUST TEMPERATURE - ENGINE OUTLET		(7)	°F	998	998	996	1056
EXHAUST GAS FLOW (@engine outlet temp, 14.5 psia)	(WET)	(8)(5)	ft3/min	4132	4132	3206	2508
EXHAUST GAS MASS FLOW	(WET)	(8)(5)	lb/hr	6579	6579	5112	3839
EMISSIONS DATA - ENGINE OUT							
NOx (as NO2)		(9)(10)	g/bhp-hr	0.50	0.50	0.50	0.50
CO		(9)(10)	g/bhp-hr	3.21	3.21	3.42	3.38
THC (mol. wt. of 15.84)		(9)(10)	g/bhp-hr	4.28	4.28	4.53	4.38
NMHC (mol. wt. of 15.84)		(9)(10)	g/bhp-hr	4.28	4.28	4.53	4.38
NMNEHC (VOCs) (mol. wt. of 15.84)		(9)(10)(11)	g/bhp-hr	4.28	4.28	4.53	4.38
HCHO (Formaldehyde)		(9)(10)	g/bhp-hr	0.28	0.28	0.30	0.31
CO2		(9)(10)	g/bhp-hr	532	532	563	601
EXHAUST OXYGEN		(9)(12)	% DRY	10.3	10.3	10.0	9.5
HEAT REJECTION							
HEAT REJ. TO JACKET WATER (JW)		(13)	Btu/min	10839	10839	9356	8592
HEAT REJ. TO ATMOSPHERE		(13)	Btu/min	3305	3305	2771	2332
HEAT REJ. TO LUBE OIL (OC)		(13)	Btu/min	2574	2574	2337	2103
HEAT REJ. TO A/C - STAGE 1 (1AC)		(13)(14)	Btu/min	3272	3272	2690	965
HEAT REJ. TO A/C - STAGE 2 (2AC)		(13)(14)	Btu/min	2569	2569	2416	1665
COOLING SYSTEM SIZING CRITERIA							
TOTAL JACKET WATER CIRCUIT (JW+OC+1AC)		(14)(15)	Btu/min	18449			
TOTAL AFTERCOOLER CIRCUIT (2AC)		(14)(15)	Btu/min	2698			
A cooling system safety factor of 0% has been added to the cooling system sizing criteria.							

CONDITIONS AND DEFINITIONS

Engine rating obtained and presented in accordance with ISO 3046/1, adjusted for fuel, site altitude and site inlet air temperature. 100% rating at maximum inlet air temperature is the maximum engine capability for the specified fuel at site altitude and maximum site inlet air temperature. Maximum rating is the maximum capability at the specified aftercooler inlet temperature for the specified fuel at site altitude and reduced inlet air temperature. Lowest load point is the lowest continuous duty operating load allowed. No overload permitted at rating shown.

For notes information consult page three.

PREPARED BY:
Data generated by Gas Engine Rating Pro Version 6.05.00
Ref. Data Set DM8826-04-001, Printed 07Aug2017

Engine Power vs. Inlet Air Temperature

Data represents temperature sweep at 500 ft and 1400 rpm

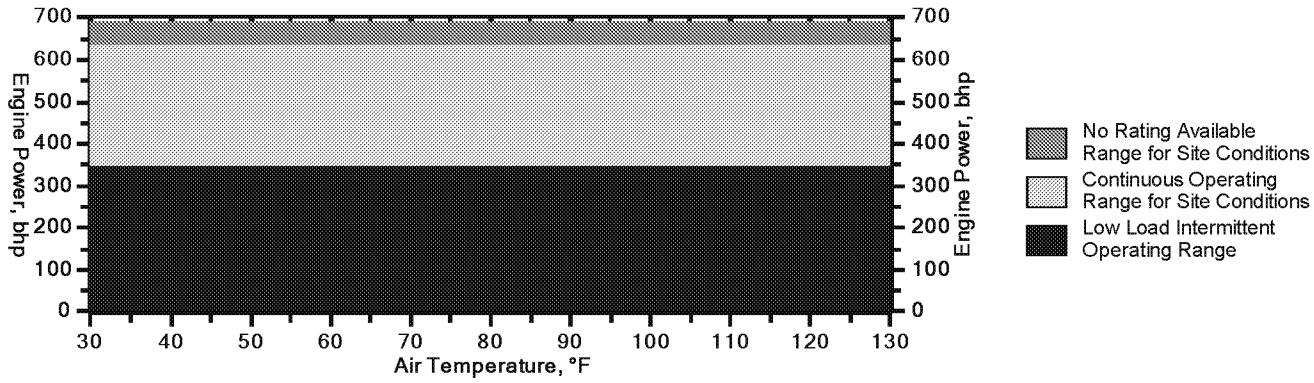

Engine Power vs. Engine Speed

Data represents speed sweep at 500 ft and 77 ºF

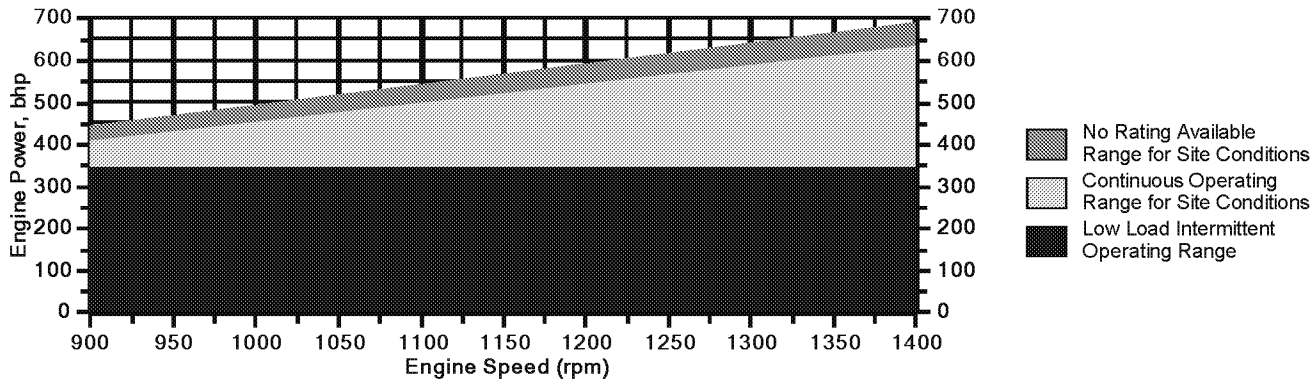

Engine Torque vs. Engine Speed

Data represents speed sweep at 500 ft and 77 ºF

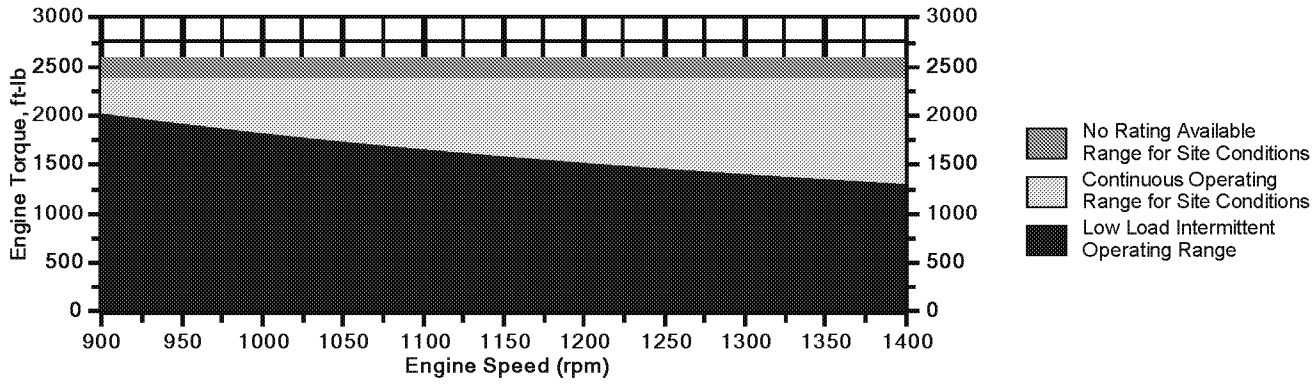

Note: At site conditions of 500 ft and 77°F inlet air temp., constant torque can be maintained down to 900 rpm. The minimum speed for loading at these conditions is 900 rpm.

NOTES

1. Fuel pressure range specified is to the engine fuel pressure regulator. Additional fuel train components should be considered in pressure and flow calculations.

2. Engine rating is with two engine driven water pumps. Tolerance is ± 3% of full load.

3. Fuel consumption tolerance is ± 3.0% of full load data.

4. Air flow value is on a 'wet' basis. Flow is a nominal value with a tolerance of ± 5 %.

5. Inlet and Exhaust Restrictions must not exceed A&I limits based on full load flow rates from the standard technical data sheet.

6. Inlet manifold pressure is a nominal value with a tolerance of ± 5 %.

7. Exhaust temperature is a nominal value with a tolerance of (+)63°F, (-)54°F.

8. Exhaust flow value is on a "wet" basis. Flow is a nominal value with a tolerance of ± 6 %.

9. Emissions data is at engine exhaust flange prior to any after treatment.

10. Values listed are higher than nominal levels to allow for instrumentation, measurement, and engine-to-engine variations. They indicate the maximum values expected under steady state conditions. Fuel methane number cannot vary more than ± 3. THC, NMHC, and NMNEHC do not include aldehydes. An oxidation catalyst may be required to meet Federal, State or local CO or HC requirements.

11. VOCs - Volatile organic compounds as defined in US EPA 40 CFR 60, subpart JJJJ

12. Exhaust Oxygen level is the result of adjusting the engine to operate at the specified NOx level. Tolerance is ± 0.5.

13. Heat rejection values are nominal. Tolerances, based on treated water, are ± 10% for jacket water circuit, ± 50% for radiation, ± 20% for lube oil circuit, and ± 5% for aftercooler circuit.

14. Aftercooler heat rejection includes an aftercooler heat rejection factor for the site elevation and inlet air temperature specified. Aftercooler heat rejection values at part load are for reference only. Do not use part load data for heat exchanger sizing.

15. Cooling system sizing criteria are maximum circuit heat rejection for the site, with applied tolerances.

Constituent	Abbrev	Mole %	Norm
Water Vapor	H2O	0.0000	0.0000
Methane	CH4	0.0000	0.0000
Ethane	C2H6	0.0000	0.0000
Propane	C3H8	97.0000	97.0000
Isobutane	iso-C4H1O	0.0000	0.0000
Norbutane	nor-C4H1O	0.5300	0.5300
Isopentane	iso-C5H12	0.0000	0.0000
Norpentane	nor-C5H12	0.0000	0.0000
Hexane	C6H14	0.0000	0.0000
Heptane	C7H16	0.0000	0.0000
Nitrogen	N2	2.4700	2.4700
Carbon Dioxide	CO2	0.0000	0.0000
Hydrogen Sulfide	H2S	0.0000	0.0000
Carbon Monoxide	CO	0.0000	0.0000
Hydrogen	H2	0.0000	0.0000
Oxygen	O2	0.0000	0.0000
Helium	HE	0.0000	0.0000
Neopentane	neo-C5H12	0.0000	0.0000
Octane	C8H18	0.0000	0.0000
Nonane	C9H20	0.0000	0.0000
Ethylene	C2H4	0.0000	0.0000
Propylene	C3H6	0.0000	0.0000
TOTAL (Volume %)		100.0000	100.0000

Fuel Makeup:	Propane
Unit of Measure:	English

Calculated Fuel Properties

Caterpillar Methane Number:	32.9
Lower Heating Value (Btu/scf):	2299
Higher Heating Value (Btu/scf):	2500
WOBBE Index (Btu/scf):	1870
THC: Free Inert Ratio:	39.49
Total % Inerts (% N2, CO2, He):	2.47%
RPC (%) (To 905 Btu/scf Fuel):	100%
Compressibility Factor:	0.983
Stoich A/F Ratio (Vol/Vol):	23.27
Stoich A/F Ratio (Mass/Mass):	15.40
Specific Gravity (Relative to Air):	1.511
Fuel Specific Heat Ratio (K):	1.137

CONDITIONS AND DEFINITIONS

Caterpillar Methane Number represents the knock resistance of a gaseous fuel. It should be used with the Caterpillar Fuel Usage Guide for the engine and rating to determine the rating for the fuel specified. A Fuel Usage Guide for each rating is included on page 2 of its standard technical data sheet.

RPC always applies to naturally aspirated (NA) engines, and turbocharged (TA or LE) engines only when they are derated for altitude and ambient site conditions.

Project specific technical data sheets generated by the Caterpillar Gas Engine Rating Pro program take the Caterpillar Methane Number and RPC into account when generating a site rating.

Fuel properties for Btu/scf calculations are at 60F and 14.696 psia.

Caterpillar shall have no liability in law or equity, for damages, consequently or otherwise, arising from use of program and related material or any part thereof.

FUEL LIQUIDS

Field gases, well head gases, and associated gases typically contain liquid water and heavy hydrocarbons entrained in the gas. To prevent detonation and severe damage to the engine, hydrocarbon liquids must not be allowed to enter the engine fuel system. To remove liquids, a liquid separator and coalescing filter are recommended, with an automatic drain and collection tank to prevent contamination of the ground in accordance with local codes and standards.

To avoid water condensation in the engine or fuel lines, limit the relative humidity of water in the fuel to 80% at the minimum fuel operating temperature.

PREPARED BY:
Data generated by Gas Engine Rating Pro Version 6.05.00
Ref. Data Set DM8826-04-001, Printed 07Aug2017

G3306 TA

GAS COMPRESSION APPLICATION

GAS ENGINE SITE SPECIFIC TECHNICAL DATA
G3306TAA Information

CATERPILLAR®

ENGINE SPEED (rpm):	1800	FUEL SYSTEM:	HPG IMPCO
COMPRESSION RATIO:	8.0:1	**SITE CONDITIONS:**	
AFTERCOOLER WATER INLET (°F):	90	FUEL:	Field Gas
JACKET WATER OUTLET (°F):	210	FUEL PRESSURE RANGE(psig):	12.0-24.9
COOLING SYSTEM:	JW+OC, AC	FUEL METHANE NUMBER:	62.2
IGNITION SYSTEM:	MAG	FUEL LHV (Btu/scf):	1027
EXHAUST MANIFOLD:	WC	ALTITUDE(ft):	1000
COMBUSTION:	Standard	MAXIMUM INLET AIR TEMPERATURE(°F):	100
EXHAUST O2 EMISSION LEVEL %:	2.0	NAMEPLATE RATING:	211 bhp@1800rpm
SET POINT TIMING:	29.9		

			MAXIMUM RATING	SITE RATING AT MAXIMUM INLET AIR TEMPERATURE		
RATING	**NOTES**	**LOAD**	**100%**	**100%**	**75%**	**51%**
ENGINE POWER	(1)	bhp	211	206	154	105
INLET AIR TEMPERATURE		°F	87	100	100	100
ENGINE DATA						
FUEL CONSUMPTION (LHV)	(2)	Btu/bhp-hr	7803	7855	8433	9344
FUEL CONSUMPTION (HHV)	(2)	Btu/bhp-hr	8622	8680	9319	10325
AIR FLOW	(3)(4)	lb/hr	1464	1437	1159	881
AIR FLOW WET (77°F, 14.7 psia)	(3)(4)	scfm	330	324	261	199
INLET MANIFOLD PRESSURE	(5)	in Hg(abs)	39.0	38.3	31.1	23.4
EXHAUST STACK TEMPERATURE	(6)	°F	1068	1066	1041	995
EXHAUST GAS FLOW (@ stack temp, 14.5 psia)	(7)(4)	ft3/min	1040	1020	809	596
EXHAUST GAS MASS FLOW	(7)(4)	lb/hr	1542	1515	1222	929
EMISSIONS DATA						
NOx (as NO2)	(8)	g/bhp-hr	27.28	26.98	23.85	20.70
CO	(8)	g/bhp-hr	2.00	2.01	2.08	1.99
THC (mol. wt. of 15.84)	(8)	g/bhp-hr	0.98	0.98	1.01	1.21
NMHC (mol. wt. of 15.84)	(8)	g/bhp-hr	0.25	0.25	0.26	0.31
NMNEHC (VOCs) (mol. wt. of 15.84)	(8)(9)	g/bhp-hr	0.17	0.17	0.18	0.21
HCHO (Formaldehyde)	(8)	g/bhp-hr	0.15	0.15	0.15	0.16
CO2	(8)	g/bhp-hr	514	516	552	610
EXHAUST OXYGEN	(10)	% DRY	2.0	2.0	2.0	2.4
HEAT REJECTION						
HEAT REJ. TO JACKET WATER (JW)	(11)	Btu/min	8105	8062	7199	6146
HEAT REJ. TO ATMOSPHERE	(11)	Btu/min	1095	1077	867	656
HEAT REJ. TO LUBE OIL (OC)	(11)	Btu/min	1282	1275	1138	972
HEAT REJ. TO AFTERCOOLER (AC)	(11)(12)	Btu/min	1067	1067	564	234

HEAT EXCHANGER SIZING CRITERIA			
TOTAL JACKET WATER CIRCUIT (JW+OC)	(12)	Btu/min	10454
TOTAL AFTERCOOLER CIRCUIT (AC)	(12)(13)	Btu/min	1120
A cooling system safety factor of 0% has been added to the heat exchanger sizing criteria.			

CONDITIONS AND DEFINITIONS

Engine rating obtained and presented in accordance with ISO 3046/1, adjusted for fuel, site altitude and site inlet air temperature.
100% rating at maximum inlet air temperature is the maximum engine capability for the specified fuel at site altitude and maximum site inlet air temperature.
Max. rating is the maximum capability for the specified fuel at site altitude and reduced inlet air temperature.
Lowest load point is the lowest continuous duty operating load allowed. No overload permitted at rating shown.

For notes information consult page three.

PREPARED BY: Keith Roberts, Natural Gas Services Group
Data generated by Gas Engine Rating Pro Version 3.03.01
Ref. Data Set DM5779-01-000, Printed 24Feb2010

Engine Power vs. Inlet Air Temperature

Data represents temperature sweep at 1000 ft and 1800 rpm

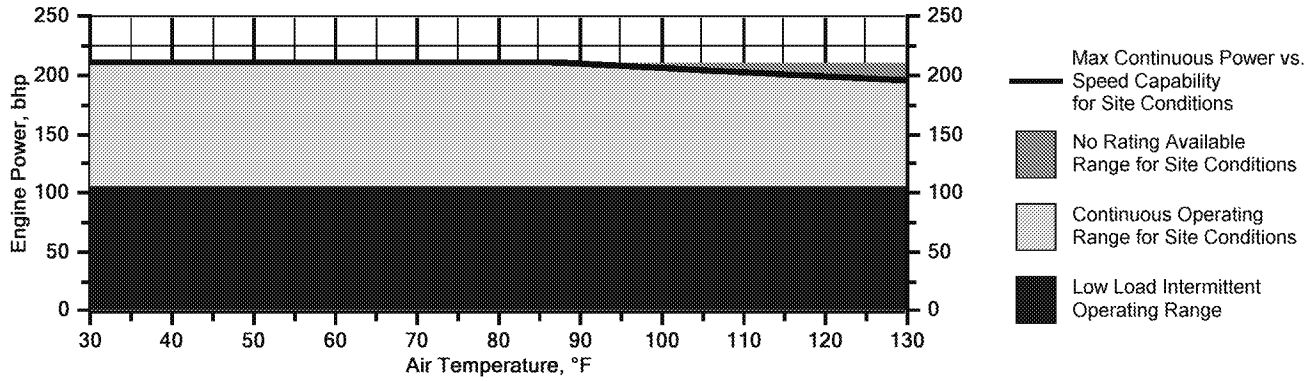

Engine Power vs. Engine Speed

Data represents speed sweep at 1000 ft and 100 ºF

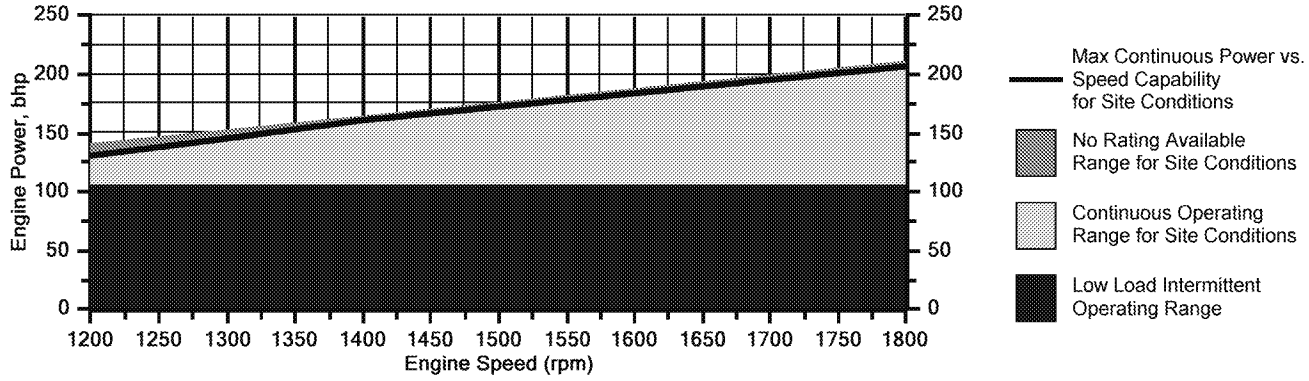

Engine Torque vs. Engine Speed

Data represents speed sweep at 1000 ft and 100 ºF

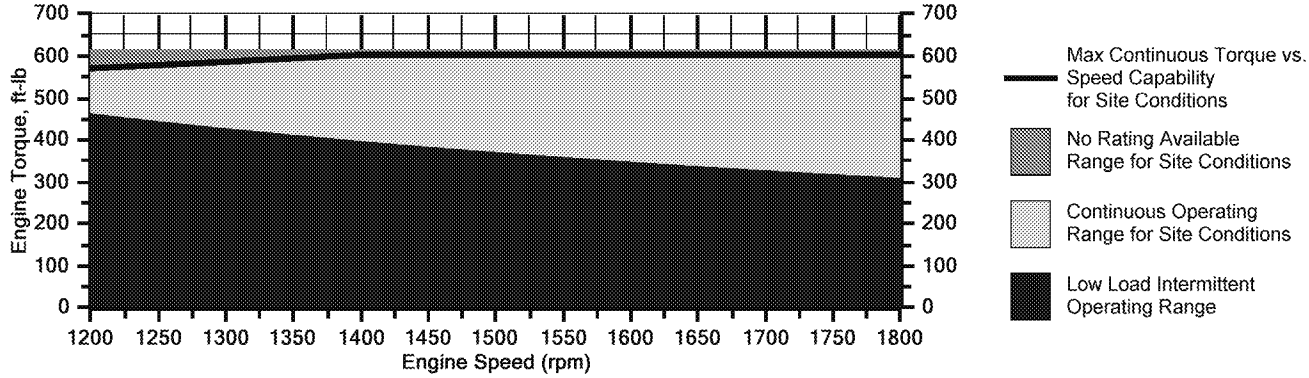

Note: At site conditions of 1000 ft and 100 ºF inlet air temp., constant torque can be maintained down to 1400 rpm. The minimum speed for loading at these conditions is 1200 rpm.

PREPARED BY: Keith Roberts, Natural Gas Services Group
Data generated by Gas Engine Rating Pro Version 3.03.01
Ref. Data Set DM5779-01-000, Printed 24Feb2010

NOTES

1. Engine rating is with two engine driven water pumps. Tolerance is ± 3% of full load.

2. Fuel consumption tolerance is ± 4.0% of full load data.

3. Undried air. Flow is a nominal value with a tolerance of ± 5 %.

4. Inlet and Exhaust Restrictions must not exceed A&I limits based on full load flow rates from the standard technical data sheet.

5. Inlet manifold pressure is a nominal value with a tolerance of ± 5 %.

6. Exhaust stack temperature is a nominal value with a tolerance of (+)63°F, (-)54°F.

7. Exhaust flow value is on a "wet" basis. Flow is a nominal value with a tolerance of ± 6 %.

8. Emission levels are at engine exhaust flange prior to any after treatment. Values are based on engine operating at steady state conditions. Fuel methane number cannot vary more than ± 3. Values listed are higher than nominal levels to allow for instrumentation, measurement, and engine-to-engine variations. They indicate "Not to Exceed" values. THC, NMHC, and NMNEHC do not include aldehydes. Part load data may require engine adjustment.

9. VOCs - Volatile organic compounds as defined in US EPA 40 CFR 60, subpart JJJJ

10. Exhaust Oxygen tolerance is ± 0.5.

11. Heat rejection values are nominal. Tolerances, based on treated water, are ± 10% for jacket water circuit, ± 50% for radiation, ± 20% for lube oil circuit, and ± 5% for aftercooler circuit.

12. Aftercooler heat rejection includes an aftercooler heat rejection factor for the site elevation and inlet air temperature specified. Aftercooler heat rejection values at part load are for reference only. Do not use part load data for heat exchanger sizing.

13. Heat exchanger sizing criteria are maximum circuit heat rejection for the site, with applied tolerances.

Constituent	Abbrev	Mole %	Norm
Water Vapor	H2O	2.5211	2.5211
Methane	CH4	86.6340	86.6340
Ethane	C2H6	4.9767	4.9767
Propane	C3H8	3.5670	3.5670
Isobutane	iso-C4H1O	0.0000	0.0000
Norbutane	nor-C4H1O	1.8211	1.8211
Isopentane	iso-C5H12	0.0000	0.0000
Norpentane	nor-C5H12	0.4802	0.4802
Hexane	C6H14	0.0000	0.0000
Heptane	C7H16	0.0000	0.0000
Nitrogen	N2	0.0000	0.0000
Carbon Dioxide	CO2	0.0000	0.0000
Hydrogen Sulfide	H2S	0.0000	0.0000
Carbon Monoxide	CO	0.0000	0.0000
Hydrogen	H2	0.0000	0.0000
Oxygen	O2	0.0000	0.0000
Helium	HE	0.0000	0.0000
Neopentane	neo-C5H12	0.0000	0.0000
Octane	C8H18	0.0000	0.0000
Nonane	C9H20	0.0000	0.0000
Ethylene	C2H4	0.0000	0.0000
Propylene	C3H6	0.0000	0.0000
TOTAL (Volume %)		100.0000	100.0000

Fuel Makeup:	Field Gas
Unit of Measure:	English

Calculated Fuel Properties

Caterpillar Methane Number:	62.2
Lower Heating Value (Btu/scf):	1027
Higher Heating Value (Btu/scf):	1135
WOBBE Index (Btu/scf):	1274
THC: Free Inert Ratio:	0
RPC (%) (To 905 Btu/scf Fuel):	100%
Compressibility Factor:	0.997
Stoich A/F Ratio (Vol/Vol):	10.68
Stoich A/F Ratio (Mass/Mass):	16.43
Specific Gravity (Relative to Air):	0.650
Specific Heat Constant (K):	1.297

CONDITIONS AND DEFINITIONS

Caterpillar Methane Number represents the knock resistance of a gaseous fuel. It should be used with the Caterpillar Fuel Usage Guide for the engine and rating to determine the rating for the fuel specified. A Fuel Usage Guide for each rating is included on page 2 of its standard technical data sheet.

RPC always applies to naturally aspirated (NA) engines, and turbocharged (TA or LE) engines only when they are derated for altitude and ambient site conditions.

Project specific technical data sheets generated by the Caterpillar Gas Engine Rating Pro program take the Caterpillar Methane Number and RPC into account when generating a site rating.

Fuel properties for Btu/scf calculations are at 60F and 14.696 psia.

Caterpillar shall have no liability in law or equity, for damages, consequently or otherwise, arising from use of program and related material or any part thereof.

FUEL LIQUIDS

Field gases, well head gases, and associated gases typically contain liquid water and heavy hydrocarbons entrained in the gas. To prevent detonation and severe damage to the engine, hydrocarbon liquids must not be allowed to enter the engine fuel system. To remove liquids, a liquid separator and coalescing filter are recommended, with an automatic drain and collection tank to prevent contamination of the ground in accordance with local codes and standards.

To avoid water condensation in the engine or fuel lines, limit the relative humidity of water in the fuel to 80% at the minimum fuel operating temperature.

EMIT Technologies, Inc
772 Airfield Lane
Sheridan, WY 82801
307.673.0883 Office
307.673.0886 Fax
cdosborn@emittechnologies.com

PREPARED FOR:

Natural Gas Services Group

A. INFORMATION PROVIDED BY CATERPILLAR

Engine:	G3306TAA
DIM Sheet:	DM5779
Compression Ratio:	8.0:1
RPM:	1800
Horsepower:	211
Fuel:	Natural Gas
Piping size:	5"
Annual Operating Hours:	8760
Exhaust Flow:	1026 CFM
Exhaust Temperature:	1041 °F
Allowable Engine Backpressure:	27" WC

Emission Data

NO_x:	27.52	g/bhp-hr
CO:	1.52	g/bhp-hr
THC:	1.11	g/bhp-hr
NMHC:	0.34	g/bhp-hr
HCHO:	N/A	g/bhp-hr
Oxygen:	2.00	%

B. POST CATALYST EMISSIONS TO BE ACHIEVED BY EMISSION CONTROL EQUIPMENT

NO_x:	<0.5 g/bhp-hr
CO:	<0.5 g/bhp-hr
VOC:	<0.5 g/bhp-hr

C. CONTROL EQUIPMENT

CATALYTIC CONVERTER/SILENCER UNIT

Model	**EAS-1450T-0505F-D1SEE**
Catalyst Type	NSCR, Precious group metals
Manufacturer	EMIT Technologies, Inc.
Element Size	14.5" x 3.5"
Catalyst Elements	1
Housing Type	Dual Bed
Catalyst Installation	Accessible Housing
Construction	10 ga 304 Stainless Steel
Sample Ports	6 (0.5" NPT)
Inlet Connections	5" flat face flange
Outlet Connections	5" flat face flange
Configuration	Assume End In / End Out
Silencer	Integrated
Silencer Grade	Critical
Insertion Loss	20-25 dBA

AIR FUEL RATIO CONTROLLER

Part Number	**ENG-S-075**
Manufacturer	EMIT Technologies, Inc.
Description	***MODEL EDGE NG*** *CSA certified AFR controller kit complete with: EDGE NG Air Fuel Ratio Controller enclosure featuring: graphical display of oxygen sensor voltage, position of the digital power valve and thermocouple temperatures. Multiscreen digital display of controller and engine parameters. Integrated high temperature shutdown, Modbus enabled, 4 wire heated O2 sensor, O2 weldment, 25' Wiring harnesses, Digital power valve, Operations manual* ***SINGLE BANK ENGINE***
Digital Power Valve Size	0.75" NPT

D. WARRANTY

EMIT Technologies,Inc. warrants that the goods supplied will be free from defects in workmanship by EMIT Technologies, Inc. for a period of one (1) year from date of shipment. EMIT Technologies, Inc. will not be responsible for any defects which result from improper use, neglect, failure to properly maintain or which are attributable to defects, errors or omissions in any drawings, specifications, plans or descriptions, whether written or oral, supplied to EMIT Technologies, Inc. by Buyer.

Catalyst performance will be guaranteed for a period of 1 year from installation, or 8760 operating hours, whichever comes first. The catalyst shall be operated with an automatic air/fuel ratio controller. The performance guarantee shall not cover the effects of excessive ash masking due to operation at low load, improper engine maintenance, or inappropriate lubrication oil. The performance guarantee shall not cover the effects of continuous engine misfires (cylinder or ignition) exposing the catalyst to excessive exothermic reaction temperatures.

The exhaust temperature operating range at the converter inlet is 600°F minimum for oxidation catalyst and 750°F for NSCR catalyst and 1250°F maximum.

If a high temperature shut down switch is not installed, thermal deactivation of catalyst at temperatures above 1300°F is not covered.

The catalyst conversion efficiencies (% reduction) will be guaranteed for engine loads of 50 to 100 percent.

Engine lubrication oil shall contain less than 0.6% ash (by weight) with a maximum allowable specific oil consumption of 0.01 gal/bhp-hr. The maximum ash loading on the catalyst shall be limited to 350 g/m3. Phosphorous and zinc additives are limited to 0.03% (by weight).

The catalyst must not be exposed to the following know poisoning agents, including: iron, nickel, sodium, chromium, arsenic, zinc, lead, phosphorous, silicon, potassium, magnesium, copper, tin, and mercury. Total poison concentrations in the gas are limited to 0.3 ppm.

CG137-8

GAS COMPRESSION APPLICATION

GAS ENGINE SITE SPECIFIC TECHNICAL DATA
CG137-8- Danny Rael

CATERPILLAR®

ENGINE SPEED (rpm):	1800	RATING STRATEGY:	STANDARD
COMPRESSION RATIO:	8.3	RATING LEVEL:	CONTINUOUS
AFTERCOOLER TYPE:	SCAC	FUEL SYSTEM:	LPG IMPCO
AFTERCOOLER WATER INLET (°F):	130		WITH CUSTOMER SUPPLIED AIR FUEL RATIO CONTROL
JACKET WATER OUTLET (°F):	210	**SITE CONDITIONS:**	
ASPIRATION:	TA	FUEL:	Field Gas
COOLING SYSTEM:	JW+OC, AC	FUEL PRESSURE RANGE(psig):	1.5-5.0
CONTROL SYSTEM:	ADEM4	FUEL METHANE NUMBER:	62.1
EXHAUST MANIFOLD:	WC	FUEL LHV (Btu/scf):	1027
COMBUSTION:	CATALYST SETTING	ALTITUDE(ft):	3200
EXHAUST OXYGEN (% O2):	0.5	MAXIMUM INLET AIR TEMPERATURE(°F):	100
SET POINT TIMING:	22	STANDARD RATED POWER:	400 bhp@1800rpm

				MAXIMUM RATING	SITE RATING AT MAXIMUM INLET AIR TEMPERATURE		
RATING		**NOTES**	**LOAD**	**100%**	**100%**	**75%**	**50%**
ENGINE POWER	(WITHOUT FAN)	(1)	bhp	400	400	300	200
INLET AIR TEMPERATURE			°F	100	100	100	100
ENGINE DATA							
FUEL CONSUMPTION (LHV)		(2)	Btu/bhp-hr	7626	7626	8001	8806
FUEL CONSUMPTION (HHV)		(2)	Btu/bhp-hr	8426	8426	8840	9731
AIR FLOW (@inlet air temp, 14.7 psia)	(WET)	(3)(4)	ft3/min	556	555	440	323
AIR FLOW	(WET)	(3)(4)	lb/hr	2362	2362	1873	1372
FUEL FLOW (60ºF, 14.7 psia)			scfm	49	49	39	29
INLET MANIFOLD PRESSURE		(5)	in Hg(abs)	57.2	57.2	46.1	34.5
EXHAUST TEMPERATURE - ENGINE OUTLET		(6)	°F	964	964	915	878
EXHAUST GAS FLOW (@engine outlet temp, 14.5 psia)	(WET)	(7)(4)	ft3/min	1583	1583	1211	864
EXHAUST GAS MASS FLOW	(WET)	(7)(4)	lb/hr	2508	2508	1988	1456
EMISSIONS DATA - ENGINE OUT							
NOx (as NO2)		(8)(9)	g/bhp-hr	12.37	12.37	12.76	13.44
CO		(8)(9)	g/bhp-hr	12.37	12.37	12.76	13.44
THC (mol. wt. of 15.84)		(8)(9)	g/bhp-hr	1.92	1.92	2.12	2.36
NMHC (mol. wt. of 15.84)		(8)(9)	g/bhp-hr	0.50	0.50	0.55	0.61
NMNEHC (VOCs) (mol. wt. of 15.84)		(8)(9)(10)	g/bhp-hr	0.34	0.34	0.37	0.41
HCHO (Formaldehyde)		(8)(9)	g/bhp-hr	0.06	0.06	0.10	0.09
CO2		(8)(9)	g/bhp-hr	471	471	497	544
EXHAUST OXYGEN		(8)(11)	% DRY	0.4	0.4	0.4	0.4
HEAT REJECTION							
HEAT REJ. TO JACKET WATER (JW)		(12)	Btu/min	17459	17459	14729	11982
HEAT REJ. TO ATMOSPHERE		(12)	Btu/min	2032	2032	1599	1173
HEAT REJ. TO LUBE OIL (OC)		(12)	Btu/min	2358	2358	1989	1618
HEAT REJ. TO AFTERCOOLER (AC)		(12)(13)	Btu/min	1985	1985	1313	648

COOLING SYSTEM SIZING CRITERIA			
TOTAL JACKET WATER CIRCUIT (JW+OC)	(13)	Btu/min	22034
TOTAL AFTERCOOLER CIRCUIT (AC)	(13)(14)	Btu/min	2084
A cooling system safety factor of 0% has been added to the cooling system sizing criteria.			

CONDITIONS AND DEFINITIONS

Engine rating obtained and presented in accordance with ISO 3046/1, adjusted for fuel, site altitude and site inlet air temperature. 100% rating at maximum inlet air temperature is the maximum engine capability for the specified fuel at site altitude and maximum site inlet air temperature. Maximum rating is the maximum capability at the specified aftercooler inlet temperature for the specified fuel at site altitude and reduced inlet air temperature. Lowest load point is the lowest continuous duty operating load allowed. No overload permitted at rating shown.

For notes information consult page three.

PREPARED BY: Bradley Johnson, Compressor Systems Inc.
Data generated by Gas Engine Rating Pro Version 5.00.00
Ref. Data Set DM9293-00-001, Printed 21Nov2014

Engine Power vs. Inlet Air Temperature

Data represents temperature sweep at 3200 ft and 1800 rpm

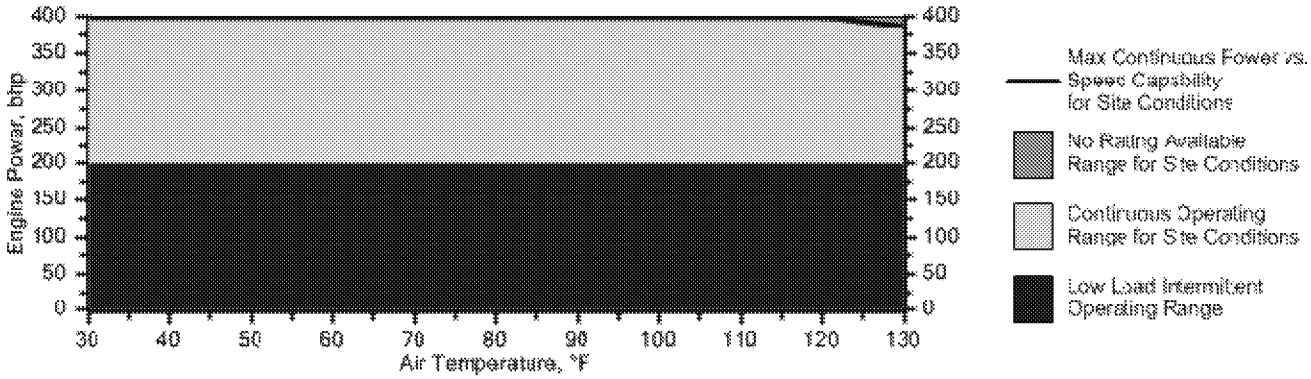

Engine Power vs. Engine Speed

Data represents speed sweep at 3200 ft and 100 °F

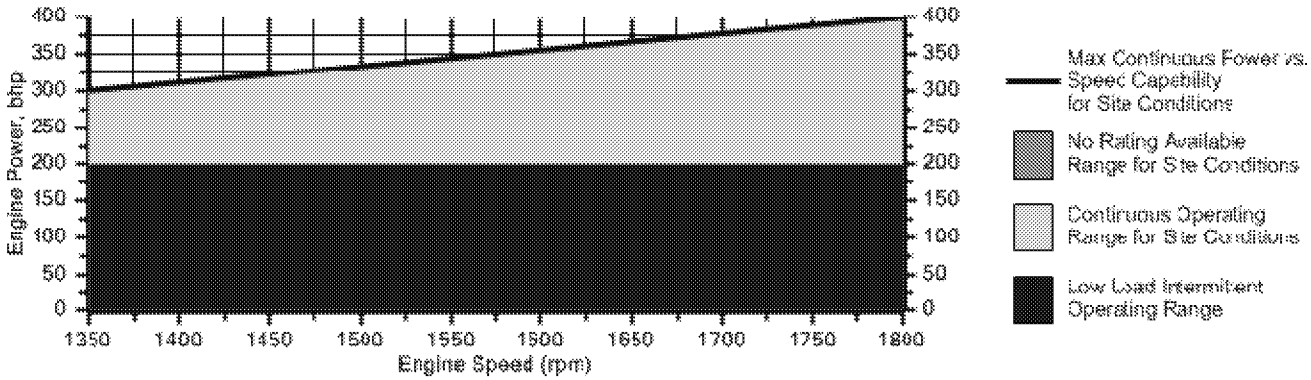

Engine Torque vs. Engine Speed

Data represents speed sweep at 3200 ft and 100 °F

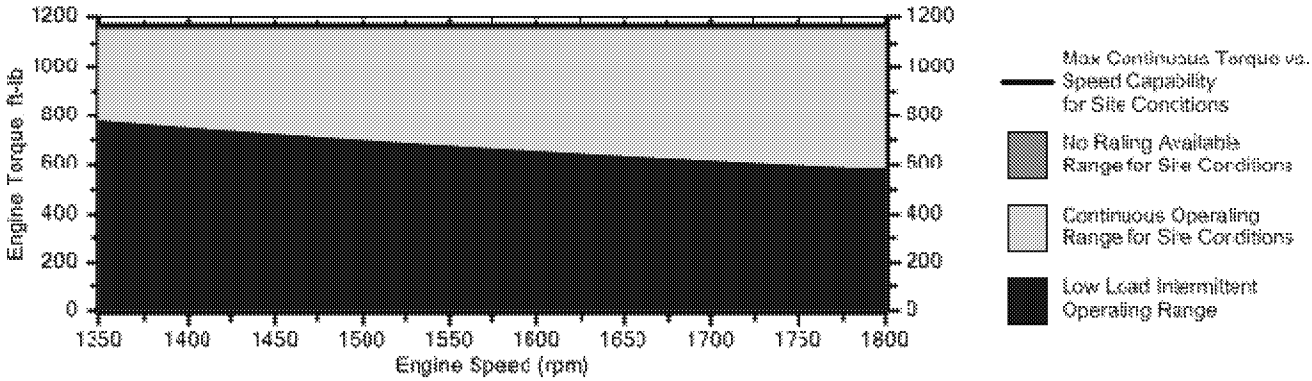

Note: At site conditions of 3200 ft and 100°F inlet air temp., constant torque can be maintained down to 1350 rpm. The minimum speed for loading at these conditions is 1350 rpm.

NOTES

1. Engine rating is with two engine driven water pumps. Tolerance is ± 3% of full load.

2. Fuel consumption tolerance is ± 5.0% of full load data.

3. Air flow value is on a 'wet' basis. Flow is a nominal value with a tolerance of ± 5 %.

4. Inlet and Exhaust Restrictions must not exceed A&I limits based on full load flow rates from the standard technical data sheet.

5. Inlet manifold pressure is a nominal value with a tolerance of ± 5 %.

6. Exhaust temperature is a nominal value with a tolerance of (+)63°F, (-)54°F.

7. Exhaust flow value is on a "wet" basis. Flow is a nominal value with a tolerance of ± 6 %.

8. Emissions data is at engine exhaust flange prior to any after treatment.

9. Emission values are based on engine operating at steady state conditions. Fuel methane number cannot vary more than ± 3. Values listed are higher than nominal levels to allow for instrumentation, measurement, and engine-to-engine variations. They indicate "Not to Exceed" values. THC, NMHC, and NMNEHC do not include aldehydes. Part Load data requires customer supplied air fuel ratio control.

10. VOCs - Volatile organic compounds as defined in US EPA 40 CFR 60, subpart JJJJ

11. Exhaust Oxygen tolerance is ± 0.2.

12. Heat rejection values are nominal. Tolerances, based on treated water, are ± 10% for jacket water circuit, ± 50% for radiation, ± 20% for lube oil circuit, and ± 5% for aftercooler circuit.

13. Aftercooler heat rejection includes an aftercooler heat rejection factor for the site elevation and inlet air temperature specified. Aftercooler heat rejection values at part load are for reference only. Do not use part load data for heat exchanger sizing.

14. Cooling system sizing criteria are maximum circuit heat rejection for the site, with applied tolerances.

Constituent	Abbrev	Mole %	Norm
Water Vapor	H2O	2.5211	2.5211
Methane	CH4	86.6340	86.6340
Ethane	C2H6	4.9767	4.9767
Propane	C3H8	3.5670	3.5670
Isobutane	iso-C4H1O	0.0000	0.0000
Norbutane	nor-C4H1O	1.8211	1.8211
Isopentane	iso-C5H12	0.0000	0.0000
Norpentane	nor-C5H12	0.4802	0.4802
Hexane	C6H14	0.0000	0.0000
Heptane	C7H16	0.0000	0.0000
Nitrogen	N2	0.0000	0.0000
Carbon Dioxide	CO2	0.0000	0.0000
Hydrogen Sulfide	H2S	0.0000	0.0000
Carbon Monoxide	CO	0.0000	0.0000
Hydrogen	H2	0.0000	0.0000
Oxygen	O2	0.0000	0.0000
Helium	HE	0.0000	0.0000
Neopentane	neo-C5H12	0.0000	0.0000
Octane	C8H18	0.0000	0.0000
Nonane	C9H20	0.0000	0.0000
Ethylene	C2H4	0.0000	0.0000
Propylene	C3H6	0.0000	0.0000
TOTAL (Volume %)		100.0000	100.0000

Fuel Makeup:	Field Gas
Unit of Measure:	English

Calculated Fuel Properties

Caterpillar Methane Number:	62.1
Lower Heating Value (Btu/scf):	1027
Higher Heating Value (Btu/scf):	1135
WOBBE Index (Btu/scf):	1274
THC: Free Inert Ratio:	Not Applicable
Total % Inerts (% N2, CO2, He):	0%
RPC (%) (To 905 Btu/scf Fuel):	100%
Compressibility Factor:	0.997
Stoich A/F Ratio (Vol/Vol):	10.68
Stoich A/F Ratio (Mass/Mass):	16.43
Specific Gravity (Relative to Air):	0.650
Specific Heat Constant (K):	1.297

CONDITIONS AND DEFINITIONS

Caterpillar Methane Number represents the knock resistance of a gaseous fuel. It should be used with the Caterpillar Fuel Usage Guide for the engine and rating to determine the rating for the fuel specified. A Fuel Usage Guide for each rating is included on page 2 of its standard technical data sheet.

RPC always applies to naturally aspirated (NA) engines, and turbocharged (TA or LE) engines only when they are derated for altitude and ambient site conditions.

Project specific technical data sheets generated by the Caterpillar Gas Engine Rating Pro program take the Caterpillar Methane Number and RPC into account when generating a site rating.

Fuel properties for Btu/scf calculations are at 60F and 14.696 psia.

Caterpillar shall have no liability in law or equity, for damages, consequently or otherwise, arising from use of program and related material or any part thereof.

FUEL LIQUIDS

Field gases, well head gases, and associated gases typically contain liquid water and heavy hydrocarbons entrained in the gas. To prevent detonation and severe damage to the engine, hydrocarbon liquids must not be allowed to enter the engine fuel system. To remove liquids, a liquid separator and coalescing filter are recommended, with an automatic drain and collection tank to prevent contamination of the ground in accordance with local codes and standards.

To avoid water condensation in the engine or fuel lines, limit the relative humidity of water in the fuel to 80% at the minimum fuel operating temperature.

PREPARED BY: Bradley Johnson, Compressor Systems Inc.
Data generated by Gas Engine Rating Pro Version 5.00.00
Ref. Data Set DM9293-00-001, Printed 21Nov2014

Engine Performance Data

Cummins Inc

Columbus, Indiana 47202-3005
http://www.cummins.com

Industrial

G8.3

FR92224

118 BHP (88 kW) @ 1800 RPM
344 lb-ft (466 N-m) @ 1800 RPM

Configuration	CPL Code	Revision
D551013CX03	**2474**	**13-May-2011**

Compression Ratio:	**10.5:1**	Displacement:	**505 in3 (8.3 L)**
Fuel System:	**Field Gas, Dry Processed Nat Gas**	Aspiration:	**Naturally Aspirated**
Emission Certification:	**Non-certified, Catalyst**		

All data is based on the engine operating with fuel system, water pump, and 6 in H2O (1.49 kPa) inlet air restriction with 3 in (76 mm) inner diameter, and with 1 in Hg (3 kPa) exhaust restriction with 3 in (76 mm) inner diameter; not included are alternator, fan, optional equipment and driven components. Coolant flows and heat rejection data based on coolants as 50% ethylene glycol/50% water. All data is subject to change without notice.

Rating Type: Continuous/WMR

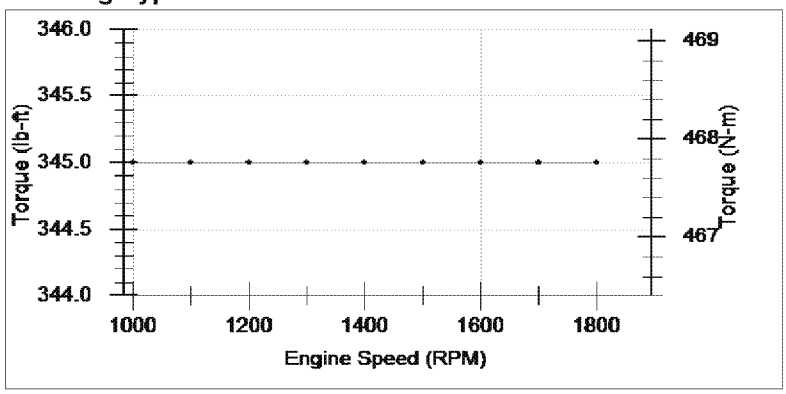

Torque Output

RPM	lb-ft	N-m
1,000	345	468
1,100	345	468
1,200	345	468
1,300	345	468
1,400	345	468
1,500	345	468
1,600	345	468
1,700	345	468
1,800	345	468

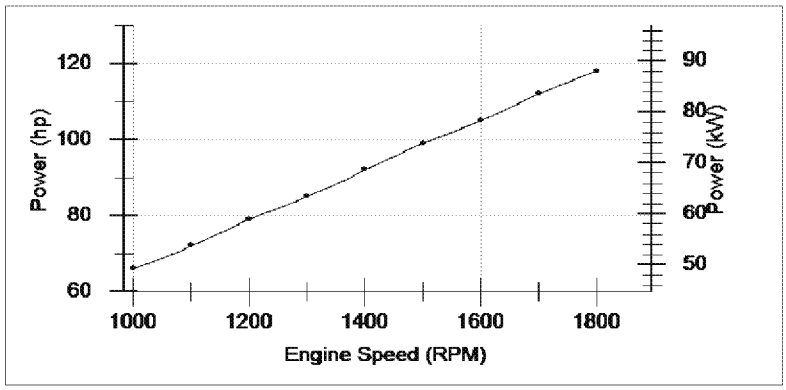

Power Output

RPM	hp	kW
1,000	66	49
1,100	72	54
1,200	79	59
1,300	85	63
1,400	92	69
1,500	99	74
1,600	105	78
1,700	112	84
1,800	118	88

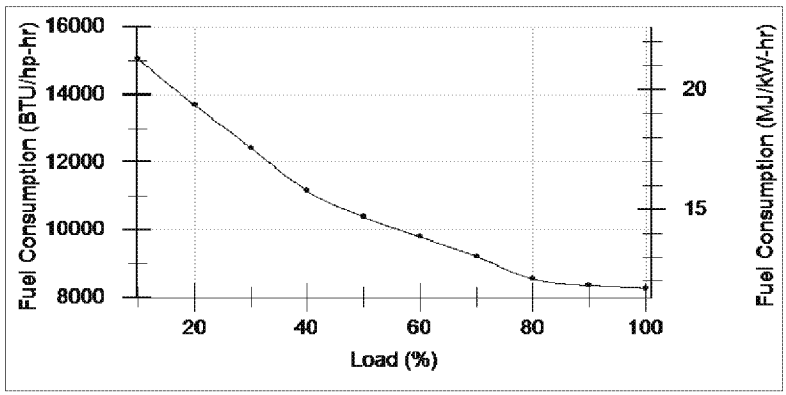

Fuel Consumption @

hp	kW	% Load	BTU/hp-hr	MJ/kW-hr
118	**88**	100	8,266	11.69
106	**79**	90	8,350	11.81
94	**70**	80	8,553	12.1
83	**62**	70	9,211	13.03
71	**53**	60	9,790	13.85
59	**44**	50	10,383	14.69
47	**35**	40	11,155	15.78
24	**18**	30	12,424	17.58
12	**9**	20	13,689	19.37
		10	15,047	21.29

Data represents gross engine capabilities obtained and corrected in accordance with SAE J1995 using dry processed natural gas fuel with 935 BTU per standard cubic foot lower heating value. Deration may be required due to altitude, temperature and type of fuel. Consult Cummins Customer Engineering with operating questions.

STATUS FOR CURVES AND DATA: Beta-(Measured data)
Tolerance: Within +/- 5%

CHIEF ENGINEER:
Alfred S Weber

Bold entries revised after 1-Mar-2010

© 2010, Cummins Inc., All Rights Reserved
Cummins Confidential and Proprietary
Controlled copy is located on gce.cummins.com

Intake Air System

Maximum allowable air temperature rise over ambient at Intake Manifold (Naturally Aspirated Engines) or Turbo Compressor inlet (Turbo-charged Engines): (This parameter impacts emissions, LAT and/or altitude capability)	15 delta deg F	8.3 delta deg C

Cooling System

Maximum coolant temperature for engine protection controls	215 deg F	102 deg C
Maximum coolant operating temperature at engine outlet (max. top tank temp):	212 deg F	100 deg C

Exhaust System

Maximum exhaust back pressure:	2 in-Hg	7 kPa
Recommended exhaust piping size (inner diameter):	3 in	76 mm

Lubrication System

Nominal operating oil pressure		
@ minimum low idle	10 psi	69 kPa
@ maximum rated speed	50 psi	345 kPa
Minimum engine oil pressure for engine protection devices		
@ minimum low idle	10 psi	69 kPa

Fuel System

Minimum fuel inlet pressure:	0 psi	2 kPa
Maximum fuel inlet pressure:	1 psi	5 kPa

Performance Data

Engine low idle speed:	900 RPM	
Maximum low idle speed:	1,800 RPM	
Minimum low idle speed:	800 RPM	
Engine high idle speed	1,800 RPM	
Governor break speed:		
Maximum torque available at closed throttle low idle speed:	50 lb-ft	68 N-m

	100% Load		75% Load		50% Load	
Engine Speed	1,800 RPM		1,800 RPM		1,800 RPM	
Output Power	118 hp	88 kW	89 hp	66 kW	59 hp	44 kW
Torque	344 lb-ft	466 N-m	260 lb-ft	353 N-m	172 lb-ft	233 N-m
Intake Manifold Pressure	-1 in-Hg	-3 kPa	-2 in-Hg	-8 kPa	-4 in-Hg	-14 kPa
Inlet Air Flow	170 ft3/min	80 L/s	142 ft3/min	67 L/s	111 ft3/min	52 L/s
Exhaust Gas Flow	604 ft3/min	285 L/s	501 ft3/min	236 L/s	383 ft3/min	181 L/s
Exhaust Gas Temperature	1,374 deg F	746 deg C	1,349 deg F	732 deg C	1,303 deg F	706 deg C
Heat Rejection to Coolant	4,034 BTU/min	71 kW	3,717 BTU/min	65 kW	3,309 BTU/min	58 kW
Heat Rejection to Ambient	1,301 BTU/min	23 kW	820 BTU/min	14 kW	638 BTU/min	11 kW
Heat Rejection to Exhaust	4,183 BTU/min	74 kW	3,438 BTU/min	60 kW	2,602 BTU/min	46 kW
Fuel Consumption	8,266 BTU/hp-hr	12 MJ/kW-hr	8,908 BTU/hp-hr	13 MJ/kW-hr	10,383 BTU/hp-hr	15 MJ/kW-hr
Air Fuel Ratio (dry)	16.2 vol/vol		16.2 vol/vol		16.2 vol/vol	
Ignition timing (BTDC)	26 deg	26 deg	26 deg	26 deg	26 deg	26 deg
Total Hydrocarbons	2.75 g/hp-hr		3.19 g/hp-hr		4.37 g/hp-hr	
VOC ppm w/o Catalyst						
VOC ppm with Catalyst						
NOx	11.6 g/hp-hr	15.56 g/kW-hr	11 g/hp-hr	14.75 g/kW-hr	8 g/hp-hr	10.73 g/kW-hr
NOx ppm w/o Catalyst						
NOx ppm with Catalyst						
CO	11 g/hp-hr	14.75 g/kW-hr	2.9 g/hp-hr	3.89 g/kW-hr	2.3 g/hp-hr	3.08 g/kW-hr
CO ppm w/o Catalyst						
CO ppm with Catalyst						
CO2	435 g/hp-hr	583 g/kW-hr	496 g/hp-hr	665 g/kW-hr	583 g/hp-hr	782 g/kW-hr
O2	0.52 %		0.61 %		0.66 %	

Bold entries revised after 1-Mar-2010

© 2010, Cummins Inc., All Rights Reserved
Cummins Confidential and Proprietary
Controlled copy is located on gce.cummins.com

Cranking System (Cold Starting Capability)

Unaided Cold Start:

Minimum cranking speed	250	RPM		
Minimum ambient temperature for unaided cold start	0	deg F	-17.8	deg C
Breakaway torque at minimum unaided cold start temperature:	480	lb-ft	651	N-m
Cold starting aids available	Block Heater			
Maximum parasitic load at 10 deg F @				

Noise Emissions

Top	89.8	dBa
Right Side	91.2	dBa
Left Side	91.7	dBa
Front	90.3	dBa
Exhaust noise emissions	105.3	dBa

Estimated Free Field Sound Pressure Level at 3.28ft (1m) and Full-Load Governed Speed
(Excludes Noise from Intake, Exhaust, Cooling System and Driven Components)

Aftercooler Heat Rejection - Heat Load on Aftercooler
BTU/min (kW)

Ambient Temp deg F (deg C)

Altitude ft (m)	**120 (49)**	**110 (43)**	**100 (38)**	**90 (32)**	**80 (27)**	**70 (21)**
0 (0)	(.0)	(.0)	(.0)	(.0)	(.0)	(.0)
1000 (305)	(.0)	(.0)	(.0)	(.0)	(.0)	(.0)
2000 (610)	(.0)	(.0)	(.0)	(.0)	(.0)	(.0)
3000 (914)	(.0)	(.0)	(.0)	(.0)	(.0)	(.0)
4000 (1219)	(.0)	(.0)	(.0)	(.0)	(.0)	(.0)
5000 (1524)	(.0)	(.0)	(.0)	(.0)	(.0)	(.0)
6000 (1829)	(.0)	(.0)	(.0)	(.0)	(.0)	(.0)
7000 (2134)	(.0)	(.0)	(.0)	(.0)	(.0)	(.0)
8000 (2438)	(.0)	(.0)	(.0)	(.0)	(.0)	(.0)
9000 (2743)	(.0)	(.0)	(.0)	(.0)	(.0)	(.0)
10000 (3048)	(.0)	(.0)	(.0)	(.0)	(.0)	(.0)

End of Report

Bold entries revised after 1-Mar-2010

© 2010, Cummins Inc., All Rights Reserved
Cummins Confidential and Proprietary
Controlled copy is located on gce.cummins.com

2040 Afton Place
Farmington, NM 87401
Office: 505.327.4945 | Direct: 307.675.5077
jmartindale@emittechnologies.com

Prepared For:
Rob Lucero
WEATHERFORD INTERNATIONAL, LTD

QUOTE: QUO-08945-M6B6

INFORMATION PROVIDED BY CUMMINS

Engine:	G8.3C118
Horsepower:	118
RPM:	1800
Compression Ratio:	10.5:1
Exhaust Flow Rate:	604 CFM
Exhaust Temperature:	1374 °F
Reference:	FR 92224
Fuel:	Natural Gas
Annual Operating Hours:	8760

Uncontrolled Emissions

	g/bhp-hr
NOx:	11.60
CO:	11.00
THC:	2.75
NMHC	0.17
NMNEHC:	N/A
HCHO:	N/A
O2:	0.52 %

POST CATALYST EMISSIONS

	g/bhp-hr
NOx:	<1.00
CO:	<2.00

CONTROL EQUIPMENT

Replacement Catalyst Element

Model:	**RE-1200-R**
Catalyst Type:	NSCR, Precious group metals
Substrate Type:	BRAZED
Manufacturer:	EMIT Technologies, Inc.
Element Quantity:	2
Element Size:	Round 12 x 3.5

The information in this quotation, and any files transmitted with it, is confidential and may be legally privileged. It is intended only for the use of individual(s) within the company named above. If you are the intended recipient, be aware that your use of any confidential or personal information may be restricted by state and federal privacy laws

2040 Afton Place
Farmington, NM 87401
Office: 505.327.4945 | Direct: 307.675.5077
jmartindale@emittechnologies.com

WARRANTY

EMIT Technologies, Inc. warrants that the goods supplied will be free from defects in workmanship by EMIT Technologies, Inc. for a period of one (1) year from date of shipment. EMIT Technologies, Inc. will not be responsible for any defects which result from improper use, neglect, failure to properly maintain or which are attributable to defects, errors or omissions in any drawings, specifications, plans or descriptions, whether written or oral, supplied to EMIT Technologies, Inc. by Buyer.

Catalyst performance using an EMIT Air/Fuel ratio controller is dependent upon properly defined set-points, variable with engine and fuel gas composition. Air/fuel ratio controller performance is guaranteed, but not limited, to fuel gas with a HHV content of 1400 BTU/SCF.

Catalyst performance will be guaranteed for a period of 1 year from installation, or 8760 operating hours, whichever comes first. The catalyst shall be operated with an automatic air/fuel ratio controller. The performance guarantee shall not cover the effects of excessive ash masking due to operation at low load, improper engine maintenance, or inappropriate lubrication oil. The performance guarantee shall not cover the effects of continuous engine misfires (cylinder or ignition) exposing the catalyst to excessive exothermic reaction temperatures. In most cases, excluding thermal deactivation, catalyst performance is redeemable by means of proper washing (refer to EMIT Catalyst/Silencer Housing Manual for element wash information, or contact a local EMIT Sales representative).

The exhaust temperature operating range at the converter inlet is a minimum of 600°F for oxidation catalyst and 750 °F for NSCR catalyst, and a maximum of 1250°F.

If a properly functioning, high temperature shut down switch is not installed, thermal deactivation of catalyst at sustained temperatures above 1250°F is not covered. If excessive exposure to over oxygenation of NSCR catalyst occurs due to improperly functioning or non -existent Air/Fuel ratio control, then deactivation of catalyst is not warranted.

The catalyst conversion efficiencies (% reduction) will be guaranteed for engine loads of 50 to 100 percent. Standard Oxidation Catalyst conversion efficiencies (% reduction) will be guaranteed for fuel gas containing less than 1.5% mole fraction of non-methane, non-ethane hydrocarbons. Applications where fuel gas exceeds this level will require a Premium Oxidation Catalyst to maintain guaranteed VOC conversion efficiencies.

Engine lubrication oil shall contain less than 0.5 wt% Sulfated Ash with a maximum allowable specific oil consumption of 0.7 g/bhp-hr. The catalyst shall be limited to a maximum ash loading of 0.022 lb/ft3. Phosphorous and zinc additives are limited to 0.03 wt%. New or Reconstructed engines must operate for a minimum of 100 hours prior to catalyst installation, otherwise the warranty is void.

The catalyst must not be exposed to the following know poisoning agents, including: antimony, arsenic, chromium, copper, iron, lead, lithium, magnesium, mercury, nickel, phosphorous, potassium, silicon, sodium, sulfur, tin, and zinc. Total poison concentrations in the fuel gas must be limited to 0.25 ppm or less for catalyst to function properly.

Shipment - Promised shipping dates are approximate lead times from the point of manufacture and are not guaranteed. EMIT Technologies, Inc. will not be liable for any loss, damage or delay in manufacture or delivery resulting from any cause beyond its control including, but not limited to a period equal to the time lost by reason of that delay. All products will be crated as per best practice to prevent any damage during shipment. Unless otherwise specified, Buyer will pay for any special packing and shipping requirements. Acceptance of goods by common carrier constitutes delivery to Buyer. EMIT Technologies, Inc. shall not be responsible for goods damaged or lost in transit.

Terms: Credit is extended to purchaser for net 30 time period. If payment is not received in the net 30 timeframe, interest on the unpaid balance will accrue at a rate of 1.5% per month from the invoice date.

Order Cancellation Terms: Upon cancellation of an order once submittal of a Purchase Order has occurred, the customer will pay a 25% restocking fee for Catalyst Housings, Catalyst Elements, and Air/Fuel Ratio Controllers; 50% restocking fee for Cooler Top Solutions, Exhaust System Accessories, and other Custom Built Products; 100% of all associated shipping costs incurred by EMIT; 100% of all project expenses incurred by EMIT for Field Services.

The information in this quotation, and any files transmitted with it, is confidential and may be legally privileged. It is intended only for the use of individual(s) within the company named above. If you are the intended recipient, be aware that your use of any confidential or personal information may be restricted by state and federal privacy laws

DEFAULT EMISSION FACTORS FOR INTERNAL COMBUSTION ENGINES (ICE) from

http://webcache.googleusercontent.com/search?q=cache:j6l9w3lypewJ:www.mdaqmd.ca.gov/Modules/ShowDocument.aspx%3Fdocumentid%3D1211+emission+factors+for+propane+engines&cd=3&hl=en&ct=clnk&gl=us
www.mdaqmd.ca.gov

Mojave Desert Air Quality Management District

FUEL			Diesel							Gasoline		Propane *		Natural Gas *					
Emission Reporting Unit (ERU)			1,000 gallons							1,000 gallons		1,000 gallons		million cubic feet (mmcf)					
Heating Value (Btu/ERU)			128.8 MMBtu / 1,000 gallons							126.8 MMBtu / 1,000 gals		91.5 MMBtu / 1,000 gals		1,000 MMBtu / mmcf					
Emission Factor Units			pound per 1,000 gallons							pounds / 1,000 gals		pounds / 1,000 gals		pounds per million cubic feet					
Size / Type / Rating of ICE			<100 Bhp	>100 Bhp	>100 Bhp	>100 Bhp	>100 Bhp		SC *	ALL	SC *	ALL	SC *	4SL<650	4SR<650	4SR<650	4SL>650	2SL>650	SC *
SCC Number			20100102 / 20200102 / 20300101							20200301 / 20300301				20200254	20200253	20100253	20200254	20200252	
Emission Controls *			UNC	UNC	IRT	AFR	WI	SCR		UNC		UNC		UNC	UNC	NSCR	UNC	UNC	
POLLUTANT	CAS #																		
CRITERIA																			
Oxide of Nitrogen																			
NO_X	42603		469.00	604.30	260.36	405.61	306.95	54.81	sd	102.00	sc	139.00	sc/sd			Vendor *			
90-105 % Load	42603													4,080.000	2,210.000	Vendor *	4,080.000	3,170.000	ap
<90% load	42603													847.000	2,270.000	Vendor *	847.000	1,940.000	ap
Carbon Monoxide																			
CO	42101		102.00	130.18	116.48	116.48	116.48	116.48	sd	3,940.00	sc	129.00	sc/sd			Vendor *			
90-105 % Load	42101													317.000	3,720.000	Vendor *	317.000	386.000	ap
<90% load	42101													557.000	3,510.000	Vendor *	557.000	353.000	ap
SO_X	42401		7.10	7.10	7.10	7.10	7.10	7.10	sd	5.31	sc	0.38	sc/sd	0.588	0.588	Vendor *	0.588	0.588	ap
PM_{10}	11101		33.50	42.48	7.85	7.85	7.85	7.85	sd	6.50	sc	5.00	sc/sd	0.077	9.500	Vendor *	0.077	38.400	ap
$PM_{2.5}$														0.077	9.500	Vendor *	0.077	38.400	ap
PM Condensable														0.099	9.910	Vendor *	0.099	9.910	ap
CO_2	124389		21,123.00	21,123.00	21,123.00	21,123.00	21,123.00	21,123.00	ap	19,500.00	ap			11,000.000	11,000.000	Vendor *	11,000.000	11,000.000	ap
TOG	43101		37.50	58.92	12.33	12.33	12.33	12.33	sd	206.00	sc	63.00	sc/sd	1,470.000	358.000	Vendor *	1,470.000	1,640.000	ap
VOC														118.000	29.600	Vendor *	118.000	120.000	ap
TOXICS		AB2588																	
1,1,2,2 - Tetrachloroethane	79345	XXX										4.29E-02	md/av	4.00E-02	2.53E-02	2.53E-02	4.00E-02	6.63E-02	ap
1,1,2 - Trichloroetrhane	79005	XXX										3.29E-02	md/av	3.18E-02	1.53E-02	1.53E-02	3.18E-02	5.27E-02	ap
1,1 - Dichloroethane	75343	XXX										2.44E-02	md/av	2.36E-02	1.13E-02	1.13E-02	2.36E-02	3.91E-02	ap
1,2,3 - Trimethylbenzene	526738											2.71E-02	md/av	2.30E-02			2.30E-02	3.54E-02	ap
1,2,4 - Trimethylbenzene	95636	XXX										4.65E-02	md/av	1.43E-02			1.43E-02	1.11E-01	ap
Ethylene Dichloride	107062	XXX										2.52E-02	md/av	2.36E-02	1.13E-02	1.13E-02	2.36E-02	4.22E-02	ap
1,2 - Dichloropropane	78875	XXX										2.79E-02	md/av	2.69E-02	1.30E-02	1.30E-02	2.69E-02	4.46E-02	ap
1,3,5 - Trimethylbenzene	108678											3.02E-02	md/av	3.38E-02			3.88E-02	1.80E-02	ap
1,3-Butadiene	106990	XXX	2.17E-01	2.17E-01	2.17E-01	2.17E-01	2.17E-01	2.17E-01	v			3.90E-01	md/av	2.67E-01	1.04E-01	1.04E-01	3.67E-01	8.20E-01	sd/ap
1,3 - Dichloropropene	542756	XXX										2.73E-02	md/av	2.64E-02	1.27E-02	1.27E-02	2.64E-02	4.38E-02	ap
2,2,4 - Trimethylpentane	540841	XXX										4.49E-01	md/av	2.50E-01			2.50E-01	8.46E-01	ap
2 - Methylnaphthalene	91576											2.93E-02	md/av	3.32E-02			3.32E-02	2.14E-02	ap
Acenaphthene	83329	XXX	2.04E-02	2.04E-02	2.04E-02	2.04E-02	2.04E-02	2.04E-02	c			9.36E-04	md/av	7.17E-04	1.94E-03	1.94E-03	1.51E-04		sd
Acenaphthylene	208968	XXX	1.47E-02	1.47E-02	1.47E-02	1.47E-02	1.47E-02	1.47E-02	c			6.45E-03	md/av	7.59E-03	1.45E-02	1.45E-02	5.25E-04	3.17E-03	sd/ap
Acetaldehyde	75070	XXX	7.83E-01	7.83E-01	7.83E-01	7.83E-01	7.83E-01	7.83E-01	v			3.29E+00	md/av	3.99E+00	8.83E-01	8.83E-01	5.29E-01	7.76E+00	sd/ap
Acrolein	107028	XXX	3.39E-02	3.39E-02	3.39E-02	3.39E-02	3.39E-02	3.39E-02	v			2.50E+00	md/av	1.63E+00	5.47E-01	5.47E-01	5.90E-02	7.78E+00	sd/ap
Ammonia (42604)	7664417	XXX						5.39E+00	c										
Anthracene	120127	XXX	6.72E-03	6.72E-03	6.72E-03	6.72E-03	6.72E-03	6.72E-03	c			7.33E-04	md/av	2.56E-04	1.84E-03	1.84E-03	1.19E-04	7.18E-04	sd/ap
Arsenic	7440382	XXX	7.80E-03	7.80E-03	7.80E-03	7.80E-03	7.80E-03	7.80E-03	sd										
Benzene	71432	XXX	1.86E-01	1.86E-01	1.86E-01	1.86E-01	1.86E-01	1.86E-01	v	6.17	sd	9.06E-01	md/av	1.21E+00	1.91E+00	7.39E-02	2.18E-01	2.95E-01	sd
Benzaldehyde	100527		1.35E-02	1.35E-02	1.35E-02	1.35E-02	1.35E-02	1.35E-02	c										
Benzo(a)anthracene	56553	XXX	2.30E-04	2.30E-04	8.52E-05	8.52E-05	8.52E-05	8.52E-05	sd			1.92E-04	md/av	7.78E-05	2.94E-04	2.94E-04	5.88E-05	3.36E-04	sd/ap
Benzo(a)pyrene	50328	XXX	1.29E-05	1.29E-05	1.76E-05	1.76E-05	1.76E-05	1.76E-05	sd			5.03E-05	md/av	7.78E-05	1.15E-04	1.15E-04	2.70E-06	5.68E-06	sd/ap
Benzo(b)fluoranthenen	205992	XXX	6.79E-06	6.79E-06	1.52E-04	1.52E-04	1.52E-04	1.52E-04	sd			1.53E-04	md/av	3.27E-04	2.37E-04	2.37E-04	4.09E-05	8.51E-06	sd/ap
Benzo(e)pyrene	192972	XXX										2.84E-04	md/av	4.15E-04			4.15E-04	2.34E-05	ap
Benzo(g,h,l)perylene	191242	XXX	6.72E-03	6.72E-03	6.72E-03	6.72E-03	6.72E-03	6.72E-03	c			8.26E-05	md/av	1.03E-04	1.95E-04	1.95E-04	7.54E-06	2.48E-05	sd/ap
Benzo(k)fluoranthene	207089	XXX	1.06E-05	1.06E-05	1.49E-05	1.49E-05	1.49-05	1.49E-05	sd			1.61E-04	md/av	5.30E-04	1.03E-04	1.03E-04	7.83E-06	4.26E-06	sd/ap
Beryllium	7440417	XXX																	
Biphenyl	92524	XXX										1.43E-01	md/av	2.12E-01			2.12E-01	3.95E-03	ap
Butane	106978											1.94E+00	md/av	5.41E-01			5.41E-01	4.75E+00	ap
Butyr/Isobutyaldehyde	78842	XXX										1.72E-01	md/av	1.01E-01	4.86E-02	4.86E-02	1.01E-01	4.37E-01	ap
Cadmium	7440439	XXX	1.50E-03	1.50E-03	1.50E-03	1.50E-03	1.50E-03	1.50E-03	v										
Carbon tetrachloride	56235	XXX										3.80E-02	md/av	3.67E-02	1.77E-02	1.77E-02	3.67E-02	6.07E-02	ap
Chlorine	7782505	XXX																	
Chlorobenzene	108907	XXX	2.00E-04	2.00E-04	2.00E-04	2.00E-04	2.00E-04	2.00E-04	v			2.95E-02	md/av	3.04E-02	1.29E-02	1.29E-02	3.04E-02	4.44E-02	ap
Ethyl chloride	75003	XXX										1.87E-03	md/av	1.87E-03			1.87E-03		
Chloroform	67663	XXX										2.95E-02	md/av	2.85E-02	1.37E-02	1.37E-02	2.85E-02	4.71E-02	ap
Chrysene	218019	XXX	6.72E-03	6.72E-03	6.72E-03	6.72E-03	6.72E-03	6.72E-03	c			2.73E-04	md/av	9.64E-05	3.10E-04	3.10E-04	1.43E-05	6.72E-04	sd/ap
Copper	7440508	XXX	4.10E-03	4.10E-03	4.10E-03	4.10E-03	4.10E-03	4.10E-03	v										
Cyclohexane	110876	XXX										3.08E-01	md/av					3.08E-01	ap
Cyclopentane	287923											1.83E-01	md/av	2.27E-01			2.27E-01	9.47E-02	ap
Dibenz(a,h)anthracene	53703	XXX	3.99E-05	3.99E-05	2.30E+00	2.37E-05	2.37E-05	2.37E-05	sd			8.70E-06	md/av	1.09E-05	1.25E-05	1.25E-05	2.70E-06		sd

DATE: 9/29/2015

DEFAULT EMISSION FACTORS FOR INTERNAL COMBUSTION ENGINES (ICE) from

http://webcache.googleusercontent.com/search?q=cache:j6l9w3lypewJ:www.mdaqmd.ca.gov/Modules/ShowDocument.aspx%3Fdocumentid%3D1211+emission+factors+for+propane+engines&cd=3&hl=en&ct=clnk&gl=us
www.mdaqmd.ca.gov

Mojave Desert Air Quality Management District

FUEL			Diesel							Gasoline		Propane *		Natural Gas *					
Emission Reporting Unit (ERU)			1,000 gallons							1,000 gallons		1,000 gallons		million cubic feet (mmcf)					
Heating Value (Btu/ERU)			128.8 MMBtu / 1,000 gallons							126.8 MMBtu / 1,000 gals		91.5 MMBtu / 1,000 gals		1,000 MMBtu / mmcf					
Emission Factor Units			pound per 1,000 gallons							pounds / 1,000 gals		pounds / 1,000 gals		pounds per million cubic feet					
Size / Type / Rating of ICE			<100 Bhp	>100 Bhp	>100 Bhp	>100 Bhp	>100 Bhp	>100 Bhp	SC *	ALL	SC *	ALL	SC *	4SL<650	4SR<650	4SR<650	4SL>650	2SL>650	SC *
SCC Number			20100102 / 20200102 / 20300101							20200301 / 20300301				20200254	20200253	20100253	20200254	20200252	
Emission Controls *			UNC	UNC	IRT	AFR	WI	SCR		UNC		UNC		UNC	UNC	NSCR	UNC	UNC	
POLLUTANT	CAS #																		
Dioxins	1086 / 1085	XXX																	
Ethane	74840											8.78E+01	md/av	1.05E+02	7.04E+01	7.04E-01	1.05E+02	7.09E+01	ap
Ethyl benzene	100414	XXX	1.09E-02	1.09E-02	1.09E-02	1.09E-02	1.09E-02	1.09E-02	v	2.36	sd	4.68E-02	md/av	3.97E-02	1.16E-02	1.16E-02	7.11E-02	6.46E-02	ap/sd
Ethylene dibromide	106934	XXX										4.58E-02	md/av	4.43E-02	2.13E-02	2.13E-02	4.43E-02	7.34E-02	ap
Fluoranthene	206440	XXX	6.72E-03	6.72E-03	6.72E-03	6.72E-03	6.72E-03	6.72E-03	c			4.74E-04	md/av	2.50E-04	9.95E-04	9.95E-04	2.91E-04	3.61E-04	sd/ap
Fluorene	86737	XXX	4.34E-02	4.34E-02	4.34E-02	4.34E-02	4.34E-02	4.34E-02	c			2.37E-03	md/av	4.60E-04	6.91E-03	6.91E-03	4.36E-04	1.69E-03	sd/ap
Formaldehyde	50000	XXX	1.73E+00	1.73E+00	1.73E+00	1.73E+00	1.73E+00	1.73E+00	v			1.02E+01	md/av	2.87E+01	2.35E+00	4.99E-02	4.71E+00	5.15E+00	sd
Furans	1080	XXX																	
Hexane	110543	XXX	2.69E-02	2.69E-02	2.69E-02	2.69E-02	2.69E-02	2.69E-02	v	5.39	sd	8.88E-01	md/av	1.11E+00			1.11E+00	4.45E-01	ap
Chromium	7440473	XXX	3.20E-03	3.20E-03	3.20E-03	3.20E-03	3.20E-03	3.20E-03	sd										
Chromium hexavalent	18540299	XXX	2.00E-04	2.00E-04	2.00E-04	2.00E-04	2.00E-04	2.00E-04	sd										
Hydrogen chloride	7647010	XXX	1.86E-01	1.86E-01	1.86E-01	1.86E-01	1.86E-01	1.86E-01	v										
Hydrogen Sulfide	7783064	XXX																	
Indeno(1,2,3-cd)pyrene	193395	XXX	2.57E-05	2.57E-05	2.84E-05	2.84E-05	2.84E-05	2.84E-05	sd			7.65E-05	md/av	1.20E-04	1.69E-04	1.69E-04	7.17E-06	9.93E-06	sd/ap
Isobutane	75285											3.75E+00	md/av					3.75E+00	ap
Lead	7439921	XXX	8.30E-03	8.30E-03	8.30E-03	8.30E-03	8.30E-03	8.30E-03	v										
Manganese	7439965	XXX	3.10E-03	3.10E-03	3.10E-03	3.10E-03	3.10E-03	3.10E-03	v										
Mercury	7439976	XXX	2.30E-03	2.30E-03	2.30E-03	2.30E-03	2.30E-03	2.30E-03	sd										
Methanol	67651	XXX										2.64E+00	md/av	2.50E+00	3.06E+00	3.06E+00	2.50E+00	2.48E+00	ap
Methylcyclohexane	108872											9.33E-01	md/av	1.23E+00			1.23E+00	3.38E-01	ap
Methylene chloride	74953	XXX										4.65E-02	md/av	2.00E-02	4.12E-02	4.12E-02	2.00E-02	1.05E-01	ap
Naphthalene	91203	XXX	1.97E-02	1.97E-02	1.97E-02	1.97E-02	1.97E-02	1.97E-02	v			8.00E-02	md/av	1.22E-01	7.65E-02	7.65E-02	2.51E-02	9.63E-02	sd/ap
Nickel	7440020	XXX	3.90E-03	3.90E-03	3.90E-03	3.90E-03	3.90E-03	3.90E-03	v										
Nonane	111842											8.36E-02	md/av	1.10E-01			1.10E-01	3.08E-02	ap
Octane	111659											2.59E-01	md/av	3.51E-01			3.51E-01	7.44E-02	ap
Pentane	109660											2.24E+00	md/av	2.60E+00			2.60E+00	1.53E+00	ap
Perylene	198550											4.96E-06	md/av					4.96E-06	ap
Phenanthrene	85018	XXX	8.68E-02	8.68E-02	8.68E-02	8.68E-02	8.68E-02	8.68E-02	c			3.34E-03	md/av	8.93E-04	7.07E-03	7.07E-03	1.85E-03	3.53E-03	sd/ap
Phenol	108952	XXX										3.00E-02	md/av	2.40E-02			2.40E-02	4.21E-02	ap
PAH *	1150	XXX	5.59E-02	5.59E-02	5.59E-02	5.59E-02	5.59E-02	5.59E-02	v			8.22E-02	md/av	2.69E-02	1.41E-01	1.41E-01	2.69E-02	1.34E-01	ap
Propane	74986											3.75E+01	md/av	4.19E+01			4.19E+01	2.87E+01	ap
Propylene	115071	XXX	4.67E-01	4.67E-01	4.67E-01	4.67E-01	4.67E-01	4.67E-01	v			1.34E+01	md/av	1.87E+01	1.60E+01	1.60E+01	5.38E+00		sd
Pyrene	129000	XXX	1.47E-02	1.47E-02	1.47E-02	1.47E-02	1.47E-02	1.47E-02	c			6.71E-04	md/av	1.23E-04	1.79E-03	1.79E-03	1.87E-04	5.84E-04	sd/ap
Selenium	7782492	XXX	9.80E-03	9.80E-03	9.80E-03	9.80E-03	9.80E-03	9.80E-03	sd	10.5	sd								
Styrene	100425	XXX										2.85E-02	md/av	2.36E-02	1.19E-02	1.19E-02	2.36E-02	5.48E-02	ap
Tetrachloroethane (Perc)	127184	XXX										2.48E-03	md/av	2.48E-03			2.48E-03		
Toluene	108883	XXX	1.05E-01	1.05E-01	1.05E-01	1.05E-01	1.05E-01	1.05E-01	v			4.76E-01	md/av	4.12E-01	1.07E+00	1.07E+00	2.39E-01	1.89E-01	sd
Diesel Particulate	9901	XXX	3.35E+01	4.25E+01	7.85E+00	7.85E+00	7.85E+00	7.85E+00	sd										
Vinyl chloride	75014	XXX										1.54E-02	md/av	1.49E-02	7.18E-03	7.18E-03	1.49E-02	2.47E-02	ap
Xylenes	1210	XXX	4.24E-02	4.24E-02	4.24E-02	4.24E-02	4.24E-02	4.24E-02	v			3.26E-01	md/av	8.63E-02	4.41E-01	4.41E-01	6.46E-01	1.29E-01	sd
Zinc	7440666	XXX	2.24E-02	2.24E-02	2.24E-02	2.24E-02	2.24E-02	2.24E-02	v										

* FOOT NOTES

SOURCE OF DATA	
c =	CARB
sc =	SCAQMD
sd =	SDCAPCD
v =	VCAPCD
ap =	USEPA - AP-42
md / av =	MDAQMD & AVAPCD

EMISSION CONTROLS	
UNC	Uncontrolled
ITR	Ignition timing retard
AFR	Air to fuel ratio
WI	Water injection
SCR	Selective catalytic reduction
NSCR	Non-elective catalytic reduction

ABBREVIATIONS	
PAH =	Polycyclic aromatic hydrocarbons
SC =	Source of emission factors
TSP =	Total suspended particulates
Vendor =	Vendor to supply data

NATURAL GAS	
4SL <650	4 Stroke lean burn <650 Bhp
4SR <650	4 Stroke rich burn <650 Bhp
4SL >650	4 Stroke lean burn >650 Bhp
2SL >650	2 Stroke lean burn >650 Bhp

Propane toxic emission factors were calculated from the natural gas toxic emission factors using the following formula:

$TEF_P = TEF_{NG} * HV_P / HV_{NG}$

TEF_P = Propane toxic emission factor

TEF_{NG} = Average of natural gas toxic emission factors

HV_P = Heating value for propane

HV_{NG} = Heating value for natural gas

DATE: 9/29/2015

Table 1 to Subpart JJJJ of Part 60—NO_x, CO, and VOC Emission Standards for Stationary Non-Emergency SI Engines ≥100 HP (Except Gasoline and Rich Burn LPG), Stationary SI Landfill/Digester Gas Engines, and Stationary Emergency Engines >25 HP

Engine type and fuel	Maximum engine power	Manufacture date	Emission standards[a]					
			g/HP-hr			ppmvd at 15% O_2		
			NO_x	CO	VOC[d]	NO_x	CO	VOC[d]
Non-Emergency SI Natural Gas[b] and Non-Emergency SI Lean Burn LPG[b]	100≤HP<500	7/1/2008	2.0	4.0	1.0	160	540	86
		1/1/2011	1.0	2.0	0.7	82	270	60
Non-Emergency SI Lean Burn Natural Gas and LPG	500≤HP<1,350	1/1/2008	2.0	4.0	1.0	160	540	86
		7/1/2010	1.0	2.0	0.7	82	270	60
Non-Emergency SI Natural Gas and Non-Emergency SI Lean Burn LPG (except lean burn 500≤HP<1,350)	HP≥500	7/1/2007	2.0	4.0	1.0	160	540	86
	HP≥500	7/1/2010	1.0	2.0	0.7	82	270	60
Landfill/Digester Gas (except lean burn 500≤HP<1,350)	HP<500	7/1/2008	3.0	5.0	1.0	220	610	80
		1/1/2011	2.0	5.0	1.0	150	610	80
	HP≥500	7/1/2007	3.0	5.0	1.0	220	610	80
		7/1/2010	2.0	5.0	1.0	150	610	80
Landfill/Digester Gas Lean Burn	500≤HP<1,350	1/1/2008	3.0	5.0	1.0	220	610	80
		7/1/2010	2.0	5.0	1.0	150	610	80
Emergency	25<HP<130	1/1/2009	[c]10	387	N/A	N/A	N/A	N/A
	HP≥130		2.0	4.0	1.0	160	540	86

```
*****************************************************************************************
*     Project Setup Information                                                         *
*****************************************************************************************
Project File               : Z:\San Juan\1 - Production\1 - Chaco\307_W Escavada UT 307-308-309\3 - NOI\NOI-R0 Applicati
Flowsheet Selection        : Oil Tank with Separator
Calculation Method         : AP42
Control Efficiency         : 95.00%
Known Separator Stream     : Low Pressure Oil
Entering Air Composition   : No
Component Group            : C10+

Well Name                  : W. Escavada UT #307/308/309
Well ID                    : Two 750-bbl Vapor Recovery Tanks (Modeled for one tank)
Date                       : 2017.11.14


*****************************************************************************************
*     Data Input                                                                        *
*****************************************************************************************

Separator Pressure (psia)          : 200.00
Separator Temperature (F)          : 150.0
C10+ SG                            : 0.86
C10+ MW(lb/lbmol)                  : 269.61

-- Low Pressure Oil ----------------------------------------------------------------------
No.   Component            Mole%    Wt%
1     H2S                    0.0000   0.0000
2     O2                     0.0000   0.0000
3     CO2                    0.0000   0.0000
4     N2                     0.0000   0.0000
5     C1                     1.0460   0.0956
6     C2                     1.1780   0.2018
7     C3                     4.4730   1.1238
8     i-C4                   1.3980   0.4629
9     n-C4                   5.5870   1.8500
10    i-C5                   3.1890   1.3109
11    n-C5                   3.9560   1.6262
12    C6                     2.3660   1.1614
13    C7                     8.9060   5.0842
14    C8                     9.1860   5.9783
15    C9                     5.4180   3.9597
16    C10+                  48.5990  74.6509
17    Benzene                0.2830   0.1259
18    Toluene                0.8280   0.4346
19    E-Benzene              0.2660   0.1609
20    Xylenes                1.1720   0.7089
21    n-C6                   2.0940   1.0281
22    224Trimethylp          0.0550   0.0358

-- Sales Oil -----------------------------------------------------------------------------
Production Rate (bbl/day)      : 1900.00
Days of Annual Operation       : 365
API Gravity                    : 41.45
Reid Vapor Pressure (psia)     : 5.72
Bulk Temperature               : 71.0

-- Tank and Shell Data -------------------------------------------------------------------
Diameter (ft)                  : 13.50
Shell Height (ft)              : 30.00
Cone Roof Slope                : 0.06
Average Liquid Height (ft)     : 25.00
Vent Pressure Range (psia)     : 0.06
Solar Absorbance               : 0.68

-- Meteorological Data -------------------------------------------------------------------
```

City : Grand Junction, CO
Min Ambient Temperature (F) : 39.6
Max Ambient Temperature (F) : 65.7
Total Solar Insolation (F) : 1659.00
Ambient Pressure (psia) : 11.70
Ambient Temperature (F) : 70.0

****
* Calculation Results *
****

-- Emission Summary --

	Uncontrolled ton	Controlled ton
Total HAPs	11.8880	0.5944
Total HC	944.1110	47.2056
VOCs, C2+	855.4320	42.7716
VOCs, C3+	728.6160	36.4308
CO2	0.0000	
CH4	88.6790	

Uncontrolled Recovery Information:
Vapor(mscfd): 48.9700
HC Vapor(mscfd): 48.9700
CO2(mscfd): 0.0000
CH4(mscfd): 11.4800
GOR(SCF/STB): 25.7737

-- Emission Composition --

No	Component	Uncontrolled ton	Controlled ton
1	H2S	0.0000	0.0000
2	O2	0.0000	0.0000
3	CO2	0.0000	0.0000
4	N2	0.0000	0.0000
5	C1	88.6790	4.4339
6	C2	126.8170	6.3408
7	C3	337.7270	16.8864
8	i-C4	66.8700	3.3435
9	n-C4	188.2710	9.4136
10	i-C5	54.1980	2.7099
11	n-C5	50.0590	2.5029
12	C6	10.6220	0.5311
13	Benzene	0.9390	0.0470
14	Toluene	0.8890	0.0444
15	E-Benzene	0.1070	0.0054
16	Xylenes	0.4010	0.0201
17	n-C6	9.4360	0.4718
18	224Trimethylp	0.1160	0.0058
19	Pseudo Comp1	8.9350	0.4467
20	Pseudo Comp2	0.0450	0.0022
21	Pseudo Comp3	0.0000	0.0000
22	Pseudo Comp4	0.0000	0.0000
23	Pseudo Comp5	0.0000	0.0000
24	Total	944.1110	47.2056

-- Stream Data --

No	Component	MW lb/lbmol	LP Oil mole %	Flash Oil mole %	Sales Oil mole %	Flash Gas mole %	W&S Gas mole %	Total Emission mole %
1	H2S	34.80	0.0000	0.0000	0.0000	0.0000	0.0000	0.0000
2	O2	32.00	0.0000	0.0000	0.0000	0.0000	0.0000	0.0000
3	CO2	44.01	0.0000	0.0000	0.0000	0.0000	0.0000	0.0000
4	N2	28.01	0.0000	0.0000	0.0000	0.0000	0.0000	0.0000
5	C1	16.04	1.0460	0.0994	0.0648	23.7043	13.6592	23.4459
6	C2	30.07	1.1780	0.4805	0.4402	17.8744	18.2923	17.8852
7	C3	44.10	4.4730	3.3080	3.2337	32.3585	36.9732	32.4772

8	i-C4	58.12	1.3980	1.2535	1.2437	4.8572	5.7168	4.8793
9	n-C4	58.12	5.5870	5.2492	5.2254	13.6717	16.2318	13.7375
10	i-C5	72.15	3.1890	3.1898	3.1887	3.1691	3.8145	3.1857
11	n-C5	72.15	3.9560	3.9990	4.0003	2.9266	3.5375	2.9423
12	C6	84.00	2.3660	2.4426	2.4467	0.5332	0.6523	0.5363
13	Benzene	78.11	0.2830	0.2927	0.2932	0.0507	0.0620	0.0510
14	Toluene	92.14	0.8280	0.8609	0.8627	0.0407	0.0504	0.0409
15	E-Benzene	106.17	0.2660	0.2769	0.2776	0.0042	0.0053	0.0043
16	Xylenes	106.17	1.1720	1.2203	1.2230	0.0159	0.0199	0.0160
17	n-C6	86.18	2.0940	2.1622	2.1658	0.4617	0.5651	0.4643
18	224Trimethylp	114.23	0.0550	0.0571	0.0572	0.0043	0.0053	0.0043
19	Pseudo Comp1	115.26	32.1906	33.5218	33.5967	0.3265	0.4130	0.3287
20	Pseudo Comp2	187.81	15.5153	16.1634	16.2000	0.0010	0.0013	0.0010
21	Pseudo Comp3	266.50	10.8918	11.3468	11.3725	0.0000	0.0000	0.0000
22	Pseudo Comp4	369.46	8.4830	8.8374	8.8574	0.0000	0.0000	0.0000
23	Pseudo Comp5	587.50	5.0284	5.2385	5.2503	0.0000	0.0000	0.0000

	LP Oil	Flash Oil	Sales Oil	Flash Gas	W&S Gas	Total Emission
MW (lb/lbmol):	174.23	179.84	180.00	39.94	43.70	40.04
Stream Mole Ratio:	1.0000	0.9599	0.9588	0.0401	0.0011	0.0412
Stream Weight Ratio:	174.23	172.62	172.59	1.60	0.05	1.65
Total Emission (ton):				917.609	26.503	944.111
Heating Value (BTU/scf):				2289.28	2489.69	2294.43
Gas Gravity (Gas/Air):				1.38	1.51	1.38
Bubble Pt. @100F (psia):	53.70	16.85	15.37			
RVP @100F (psia):	125.27	73.15	70.30			
Spec. Gravity @100F:	0.82	0.83	0.83			

TANKS 4.0.9d
Emissions Report - Summary Format
Tank Indentification and Physical Characteristics

Identification

User Identification:	500 bbl Post-Flash Oil Tanks
City:	Grand Junction
State:	Colorado
Company:	WPX Energy Production, LLC
Type of Tank:	Vertical Fixed Roof Tank
Description:	Modeled for one tank

Tank Dimensions

Shell Height (ft):		20.00
Diameter (ft):		13.30
Liquid Height (ft) :		20.00
Avg. Liquid Height (ft):		10.00
Volume (gallons):		20,785.30
Turnovers:		186.84
Net Throughput(gal/yr):		3,883,600.00
Is Tank Heated (y/n):	Y	

Paint Characteristics

Shell Color/Shade:	Gray/Medium
Shell Condition	Good
Roof Color/Shade:	Gray/Medium
Roof Condition:	Good

Roof Characteristics

Type:	Cone	
Height (ft)		0.10
Slope (ft/ft) (Cone Roof)		0.06

Breather Vent Settings

Vacuum Settings (psig):	0.00
Pressure Settings (psig)	0.00

Meterological Data used in Emissions Calculations: Grand Junction, Colorado (Avg Atmospheric Pressure = 12.37 psia)

TANKS 4.0.9d
Emissions Report - Summary Format
Liquid Contents of Storage Tank

500 bbl Post-Flash Oil Tanks - Vertical Fixed Roof Tank
Grand Junction, Colorado

Mixture/Component	Month	Daily Liquid Surf. Temperature (deg F) Avg.	Min.	Max.	Liquid Bulk Temp (deg F)	Vapor Pressure (psia) Avg.	Min.	Max.	Vapor Mol. Weight.	Liquid Mass Fract.	Vapor Mass Fract.	Mol. Weight	Basis for Vapor Pressure Calculations
Crude oil (RVP 5)	All	78.14	66.01	90.26	71.01	4.0601	3.2340	5.0465	50.0000			207.00	Option 4: RVP=5

TANKS 4.0.9d
Emissions Report - Summary Format
Individual Tank Emission Totals

Emissions Report for: Annual

500 bbl Post-Flash Oil Tanks - Vertical Fixed Roof Tank
Grand Junction, Colorado

	Losses(lbs)		
Components	Working Loss	Breathing Loss	Total Emissions
Crude oil (RVP 5)	4,606.90	1,491.39	6,098.29

TANKS 4.0.9d
Emissions Report - Summary Format
Tank Indentification and Physical Characteristics

Identification

User Identification:	500 bbl Post-Flash Produced Water Tanks
City:	Grand Junction
State:	Colorado
Company:	WPX Energy Production, LLC
Type of Tank:	Vertical Fixed Roof Tank
Description:	Modeled for one tank

Tank Dimensions

Shell Height (ft):		20.00
Diameter (ft):		13.30
Liquid Height (ft) :		20.00
Avg. Liquid Height (ft):		10.00
Volume (gallons):		20,785.30
Turnovers:		737.54
Net Throughput(gal/yr):		15,330,000.00
Is Tank Heated (y/n):	Y	

Paint Characteristics

Shell Color/Shade:	Gray/Medium
Shell Condition	Good
Roof Color/Shade:	Gray/Medium
Roof Condition:	Good

Roof Characteristics

Type:	Cone	
Height (ft)		0.00
Slope (ft/ft) (Cone Roof)		0.06

Breather Vent Settings

Vacuum Settings (psig):	0.00
Pressure Settings (psig)	0.00

Meterological Data used in Emissions Calculations: Grand Junction, Colorado (Avg Atmospheric Pressure = 12.37 psia)

TANKS 4.0.9d
Emissions Report - Summary Format
Liquid Contents of Storage Tank

500 bbl Post-Flash Produced Water Tanks - Vertical Fixed Roof Tank
Grand Junction, Colorado

Mixture/Component	Month	Daily Liquid Surf. Temperature (deg F) Avg.	Min.	Max.	Liquid Bulk Temp (deg F)	Vapor Pressure (psia) Avg.	Min.	Max.	Vapor Mol. Weight.	Liquid Mass Fract.	Vapor Mass Fract.	Mol. Weight	Basis for Vapor Pressure Calculations
Produced Water	All	78.14	66.01	90.26	71.01	0.4933	0.3297	0.7240	19.2205			18.88	
Crude oil (RVP 5)						4.0601	3.2340	5.0465	50.0000	0.0500	0.0977	207.00	Option 4: RVP=5
Water						0.4770	0.3164	0.7042	18.0200	0.9500	0.9023	18.02	Option 2: A=8.10765, B=1750.286, C=235

TANKS 4.0.9d
Emissions Report - Summary Format
Individual Tank Emission Totals

Emissions Report for: Annual

500 bbl Post-Flash Produced Water Tanks - Vertical Fixed Roof Tank
Grand Junction, Colorado

	Losses(lbs)		
Components	Working Loss	Breathing Loss	Total Emissions
Produced Water	717.56	52.28	769.83
Water	647.49	47.17	694.66
Crude oil (RVP 5)	70.07	5.10	75.18

Service and Maintenance Manual

10 HP 7D/8D VRUE Skid Auto Bypass Gas Compressor

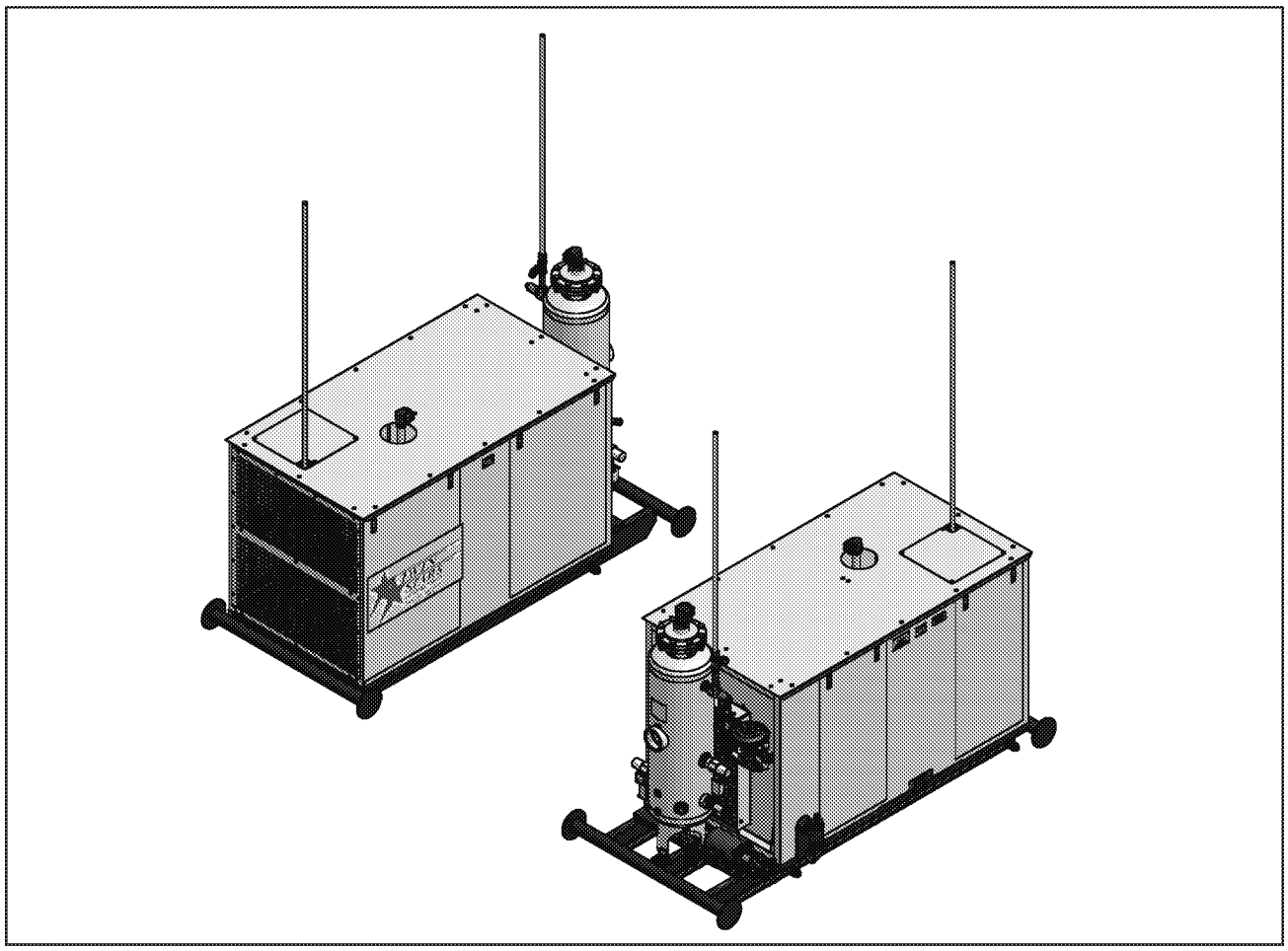

This manual must be read carefully before using your Twin Stars, Ltd. Gas Compressor. Store in a safe and convenient location for future reference.

For technical support:

Phone: (505) 632-9202 (Outside USA)
Fax: (505) 632-2723 (USA)
Website: http://www.twinstars.com

309696
2/4/2013

Specifications

4.1 Specification Sheet 7D

Gas Delivery @ 130 PSI with SG 1.20 & 0 PSI Inlet Pressure	MSCFD	17.5	18	20	21	22
Motor Speed	RPM	2900	3000	3200	3400	3600
Variable Frequency Drive (VFD) Electric Motor	Rating	10 HP				
	Volt	460				
	Phase	3				
	Frequency	60 Hz maximum				
	Frame	TEFC				
	Electrical Classification	Class 1, Division 2, Group D				
Compressor Gasend	SCA7D					
Compressor Oil Capacity	10 1/2 Gallons					
Machine Weight	2467 lbs (Wet)					
Overall Dimensions	104 3/4" L x 71 3/4" H x 51 1/4" W					
Duty Cycle	Continuous Duty					
Machine Operating Angle	15° maximum					
Ambient Conditions	-40°F to 125°F					

NOTICE Running the electric motor less then 2900 rpm will produce insufficient oil flow for the compressor.

SPECIFICATIONS SUBJECT TO CHANGE WITHOUT PRIOR NOTICE

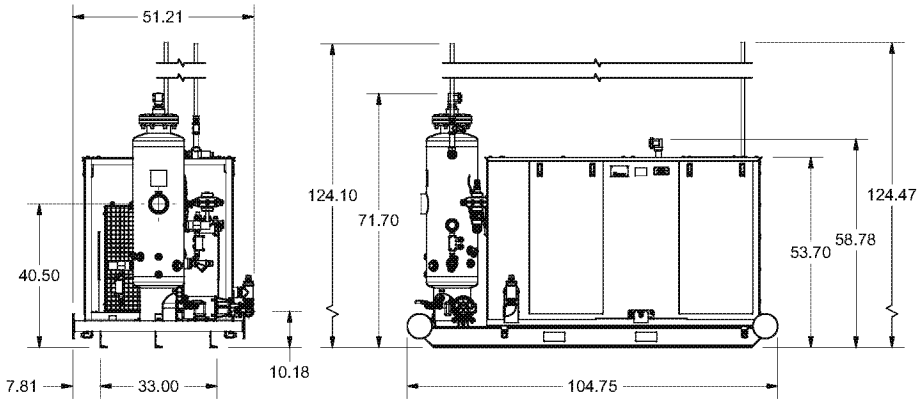

ED_004016Q_00002229-00136

5.14 Low Suction Bypass

The unit is equipped with a low suction bypass that allows a controlled amount of gas from the higher pressure discharge side to recirculate to the inlet scrubber vessel, this is to prevent a vacuum from being pulled on the tank(s). The bypass consists of a normally closed pneumatic motor valve and two normally open solenoid valves. One solenoid valve allows gas to vent from the pneumatic valve into the suction scrubber if the pressure in the tank(s) rises above the **"HiBypassSP"**, causing the motor valve to close. The other solenoid valve allows regulated gas pressure (40 psig) to open the motor valve if the pressure in the tank(s) falls below the **"LoBypassSP"**.

ED_004016Q_00002229-00137

EQUIPMENT SPECIFICATIONS

WILLIAMS PRODUCTION

Quotation No. PES-G253, Addendum No. 2

286 Bbl. Heated Storage Assembly

286 Bbl. Welded Tank with Flat Bottom, 16'-0" Dia. x 8' High, Designed and Constructed in accordance with API 12F Specifications, 1/4" Bottom - 3/16" Shell – 1/4" Deck, with: 24" x 36" Extended Type Cleanout with 1-Piece Cover, Bolts, Nuts and Non-Asbestos Gasket; Combination Thief Valve and Pressure-Vacuum Valve (Round Type); 7 – 4" Threaded API Connections; 2 – Lifting Lugs; 100% Exterior painted one coat standard shop primer. Exterior sides and deck painted one coat of industrial enamel (color TBD by Customer).

PESCO Firebox Assembly, installed in above tank, to consist of the following:

- 1 - Firebox, 6 5/8" O.D., U-Tube type, 21'-0" submerged length, 36.0 Sq. Ft. heat transfer area, 12,000 Btu/Hr/Sq.Ft. flux rate, 125,000 Btu/Hr. nominal capacity
- 1 - Runner and hold-down assembly installed in tank
- 1 - Lighting connection with cover installed on firebox
- 1 - Smokestack, 6" O.D., with bird screen
- 1 - Flame arrestor, horizontal, coned type, 14" diameter flame cell, to include: 1" burner, pilot light and 8" access manway with cover
- 1 - Supply gas scrubber, capped ends, 4 ½" O.D. x 2'-0" High, 75# W.P., to include high level shut-down, drain valve and carbon steel relief valve (customer to provide supply gas)
- 1 - Thermostat, Kimray T-12, with carbon steel thermowell
- 1 - Thermometer, 20 – 240 Deg. F. range, with carbon steel thermowell
- 1 - Instrument gas regulator, Fisher Type 67CR
- 1 - Burner fuel gas regulator, Fisher Type 67CR
- 1 - Burner fuel gas control valve, Fisher Type 167A
- 1 - Burner fuel gas pressure gauge, 0-30 psig range, stainless steel internals
- 1 - Burner fuel gas shut-off valve, carbon steel ball type
- 1 - Pilot light fuel gas regulator, Fisher Type 67CR
- 1 - Pilot light fuel gas pressure gauge, 0-30 psig range, stainless steel internals
- 1 - Pilot light fuel gas shut-off valve, carbon steel ball type
- 1 - Set piping and tubing; tubing and tube fittings to be 3/8" stainless steel

286 Bbl. Internal Coating Option

100% Interior to be sandblasted to SSPC-SP10, near white metal and coated with two coats of Sherwin Williams Dura-Plate 235 @ 4-8 mils DFT each.

500 Bbl. Heated Storage Assembly

500 Bbl. Welded Tank with Flat Bottom, 13'-4" Dia. x 20' High, Designed and Constructed in accordance with API 12F Specifications, 1/4" Bottom - 3/16" Shell – 3/16" Deck, with: 24" x 36" Extended Type Cleanout with 1-Piece Cover, Bolts, Nuts and Non-Asbestos Gasket; Combination Thief Valve and Pressure-Vacuum Valve (Round Type); 7 – 4" Threaded API Connections; 2 – Lifting Lugs; 100% Exterior painted one coat standard shop primer. Exterior sides and deck painted one coat of industrial enamel (color TBD by Customer).
1 - Stairway for 20' High Tank and Landing, Assembled, Painted same as Tank Exterior

PESCO Firebox Assembly, installed in above tank, to consist of the following:

- 1 - Firebox, 6 5/8" O.D., U-Tube type, 21'-0" submerged length, 36.0 Sq. Ft. heat transfer area, 12,000 Btu/Hr/Sq.Ft. flux rate, 125,000 Btu/Hr. nominal capacity
- 1 - Runner and hold-down assembly installed in tank
- 1 - Lighting connection with cover installed on firebox
- 1 - Smokestack, 6" O.D., with bird screen
- 1 - Flame arrestor, horizontal, coned type, 14" diameter flame cell, to include: 1" burner, pilot light and 8" access manway with cover
- 1 - Supply gas scrubber, capped ends, 4 ½" O.D. x 2'-0" High, 75# W.P., to include high level shut-down, drain valve and carbon steel relief valve (customer to provide supply gas)
- 1 - Thermostat, Kimray T-12, with carbon steel thermowell
- 1 - Thermometer, 20 – 240 Deg. F. range, with carbon steel thermowell
- 1 - Instrument gas regulator, Fisher Type 67CR
- 1 - Burner fuel gas regulator, Fisher Type 67CR
- 1 - Burner fuel gas control valve, Fisher Type 167A
- 1 - Burner fuel gas pressure gauge, 0-30 psig range, stainless steel internals
- 1 - Burner fuel gas shut-off valve, carbon steel ball type
- 1 - Pilot light fuel gas regulator, Fisher Type 67CR
- 1 - Pilot light fuel gas pressure gauge, 0-30 psig range, stainless steel internals
- 1 - Pilot light fuel gas shut-off valve, carbon steel ball type
- 1 - Set piping and tubing; tubing and tube fittings to be 3/8" stainless steel

500 Bbl. Internal Coating Option

100% Interior to be sandblasted to SSPC-SP10, near white metal and coated with two coats of Sherwin Williams Dura-Plate 235 @ 4-8 mils DFT each.

VENTURI BURNERS

THIS VENTURI-TYPE BURNER IS THE MOST ENERGY-EFFICIENT TYPE OF BURNER WE HAVE TESTED. IT IS DESIGNED FOR USE WITH THROTTLE-ACTION OR SNAP-ACTION THERMOSTATS. THE BURNER EFFICIENTLY FIRES THROUGH A RANGE OF PRESSURES ~ FROM 1 TO 18 PSIG ~ WITH NO ADDITIONAL ADJUSTMENTS. IT IS AVAILABLE IN BOTH 1-1/4" 500 MBTU (1/2 MILLION) AND 2" 1.250 (1 MILLION AND A QUARTER) MMBTU.

SEVERAL OPERATING PROBLEMS ARE SOLVED BY USE OF A PROPERLY DESIGNED VENTURI BURNER. FIRST, A VENTURI BURNER ENSURES THAT AT ANY BURNER OPERATING PRESSURE, THE PROPER AMOUNT OF PRIMARY AIR FOR EFFICIENT COMBUSTION IS DRAWN INTO THE VENTURI AND MIXED WITH THE FUEL GAS. ONCE A VENTURI BURNER HAS BEEN SET FOR A PARTICULAR ALTITUDE OR LOCATION, NO FURTHER ADJUSTMENTS ARE REQUIRED. SECOND, A VENTURI BURNER ALLOWS FOR OTHER THROTTLING DEVICES, SUCH AS AN AUTOMATIC SECONDARY AIR CONTROLLER, TO BE USED IN CONJUNCTION WITH THE BURNER.

THE BURNERS ARE USED ON A COMPLETE RANGE OF OIL AND GAS PROCESSING AND PRODUCTION EQUIPMENT. ON LARGER FIRETUBES WHERE A SINGLE BURNER IS NOT ADEQUATE TO SATISFY THE HEAT REQUIREMENTS, MULTIPLE BURNERS ARE USED WITH VERY SATISFACTORY RESULTS.

THE BURNER HAS BEEN USED ON OIL AND GAS PROCESSING AND PRODUCTION EQUIPMENT. AS MANY CUSTOMERS HAVE BECOME MORE CONCERNED ABOUT FUEL GAS CONSUMPTION, THEY HAVE BEGUN SPECIFYING A VENTURI-TYPE BURNER AS THEIR FIRST CHOICE TO BE USED ON THEIR PROCESSING AND PRODUCTION EQUIPMENT. VENTURI-TYPE BURNERS ARE APPROXIMATELY 6% MORE EFFICIENT THAN MIXING CHAMBER BURNERS.

THE BURNER CAN BE INSTALLED ON ANY TYPE OF FIRED, OILFIELD PROCESSING AND PRODUCTION EQUIPMENT PRESENTLY IN THE FIELD WITH LITTLE OR NO MODIFICATIONS REQUIRED.

Venturi Burner
1933-10

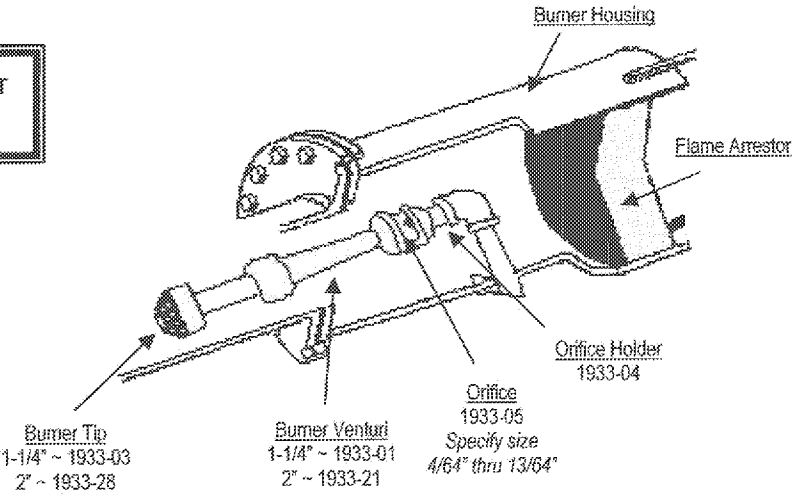

DECANO, INC.
1524 LARGO ~ BLOOMFIELD, NM 87413
505.632.2009 ~ FAX 505.632.0247

BURNER SIZING
(Standard Cubic Feet Per Hour)

Gas Specific Gravity 0.65 Temperature 70°F (21°C)

Oficie Size in Inches:

	1/16"	5/64"	3/32"	7/64"	1/8"	9/64"	5/32"	11/64"	3/16"
PSIG 1	30	48	69	94	123	156	192	233	277
PSIG 2	43	67	97	132	173	219	271	328	390
PSIG 3	52	82	118	161	211	267	330	399	475
PSIG 4	60	94	136	185	242	307	379	458	546
PSIG 5	67	105	151	206	269	341	421	510	607
PSIG 6	73	114	165	225	294	372	459	555	661
PSIG 7	78	123	177	241	315	399	493	597	710
PSIG 8	84	131	189	257	336	425	525	635	756
PSIG 9	88	138	199	271	354	449	554	670	798
PSIG 10	93	145	209	284	372	471	581	703	837
PSIG 11	97	151	218	297	388	491	607	734	874
PSIG 12	101	157	227	309	404	511	631	763	909
PSIG 13	104	163	235	320	419	530	654	792	943
PSIG 14	108	169	244	332	434	549	678	821	977
PSIG 15	112	175	252	344	449	568	702	849	1011
PSIG 16	116	181	261	355	464	588	725	878	1045
PSIG 17	119	187	269	367	479	607	749	906	1079
PSIG 18	123	193	278	378	494	626	773	935	1113

For more information on these or any other equipment you may be interested in, contact:
Decano, Inc.
1524 Largo
Bloomfield, NM 87413
505-632-2009

1524 Largo, Bloomfield, New Mexico 87413
505-632-2009
Fax: 505-632-0247

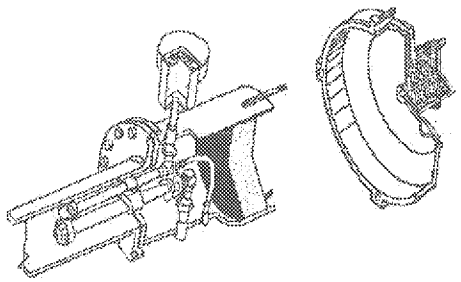

SureFire Pilot Light

Venturi Burners

Automatic Secondary Air Controllers

C65 & C65 ICHP MicroTurbine Natural Gas

Achieve ultra-low emissions and reliable electrical/thermal generation from natural gas.

- Ultra-low emissions
- One moving part – minimal maintenance and downtime
- Patented air bearing – no lubricating oil or coolant
- 5 and 9 year Factory Protection Plans available
- Remote monitoring and diagnostic capabilities
- Integrated utility synchronization and protection[1]
- Small, modular design allows for easy, low-cost installation
- Reliable – tens of millions of run hours and counting

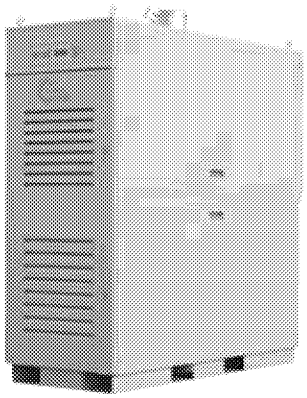

C65 MicroTurbine

Electrical Performance[2]

Electrical Power Output	65kW
Voltage	400–480 VAC
Electrical Service	3-Phase, 4 wire
Frequency	50/60 Hz, grid connect operation
	10–60 Hz, stand alone operation
Maximum Output Current	100A, grid connect operation
	100A, stand alone operation[3]
Electrical Efficiency LHV	29%

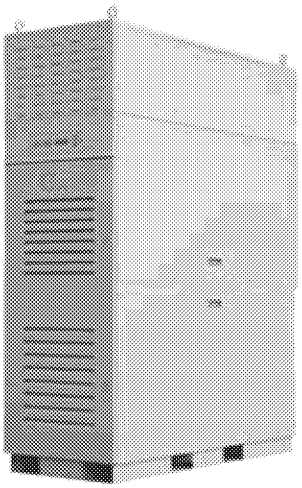

C65 ICHP MicroTurbine

Fuel/Engine Characteristics[2]

Natural Gas HHV	30.7–47.5 MJ/m³ (825–1,275 BTU/scf)
Inlet Pressure[4]	517–552 kPa gauge (75–80 psig)
Fuel Flow HHV	888 MJ/hr (842,000 BTU/hr)
Net Heat Rate LHV	12.4 MJ/kWh (11,800 BTU/kWh)

Exhaust Characteristics[2]

NOx Emissions at 15% O_2[5]	< 9 ppmvd (19 mg/m³)
NOx / Electrical Output[5]	0.16 g/bhp-hr (0.46 lb/MWhe)
Exhaust Gas Flow	0.49 kg/s (1.08 lbm/s)
Exhaust Gas Temperature	309°C (588°F)

Reliable power when and where you need it. Clean and simple.

C65 ICHP Heat Recovery[6]		
Integrated Heat Recovery Module Type	Copper Core	Stainless Steel Core
Hot Water Heat Recovery	120 kW (408,000 BTU/hr)	74 kW (251,000 BTU/hr)
Total System Efficiency LHV	82%	62%

Dimensions & Weight[7]	C65	C65 ICHP
Width x Depth[8] x Height[9]	0.76 x 1.9 x 1.9 m (30 x 77 x 76 in)	0.76 x 2.2 x 2.4 m (30 x 87 x 93 in)
Weight - Grid Connect Model	758 kg (1,671 lb)	1000 kg (2,200 lb)
Weight - Dual Mode Model	1121 kg (2,471 lb)	1364 kg (3,000 lb)

Minimum Clearance Requirements[10]	C65	C65 ICHP
Vertical Clearance	0.61 m (24 in)	0.61 m (24 in)
Horizontal Clearance		
Left & Right	0.76 m (30 in)	0.76 m (30 in)
Front[11]	1.7 m (65 in)	1.7 m (65 in)
Rear	0.91 m (36 in)	0.76 m (30 in)

Sound Levels	C65	C65 ICHP
Acoustic Emissions at Full Load Power[12]		
Nominal at 10 m (33 ft)	70 dBA	65 dBA

Certifications

- Certified to UL 2200 and UL 1741 for natural gas operation (UL files AU2687, E209370)
- Complies with IEEE 1547 and meets statewide utility interconnection requirements for California Rule 21 and the New York State Public Service Commission
- Materials Equipment Acceptance (MEA) approval for New York City
- Models available with optional equipment for CE Marking

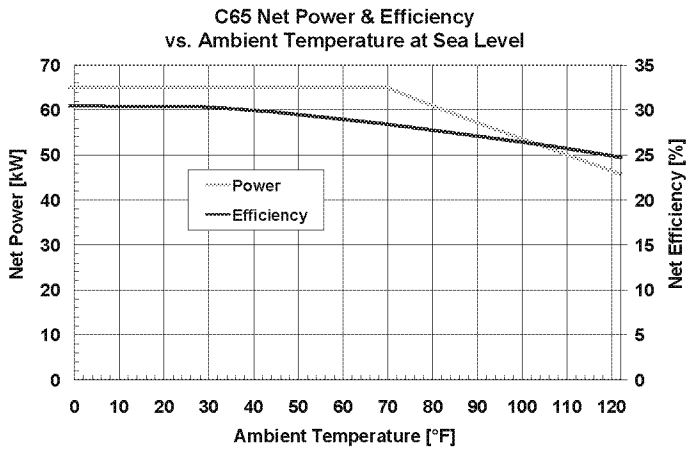

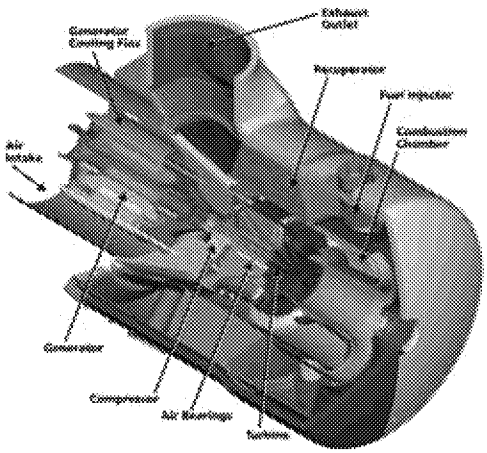

(1) Some utilities may require additional equipment for grid interconnectivity
(2) Nominal full power performance at ISO conditions: 59°F, 14.696 psia, 60% RH
(3) With linear load
(4) Inlet pressure for standard natural gas at 39.4 MJ/Nm³ (1,000 BUT/scf) (HHV)
(5) Exhaust emissions for standard natural gas at 39.4 MJ/Nm³ (1,000 BTU/scf) (HHV)
(6) Heat recovery for water inlet temperature of 38°C (100°F) and flow rate of 2.5 l/s (40 GPM)
(7) Approximate dimensions and weights
(8) Depth includes 10 inch extension for the heat recovery module rain hood on ICHP versions
(9) Height dimensions are to the roof line. Exhaust outlet extends at least 7 inches above the roof line
(10) Clearance requirements may increase due to local code considerations
(11) Dual Mode MicroTurbine configuration for Battery Removal clearance
(12) The optional acoustic inlet hood kit can reduce acoustic emissions at the front of the MicroTurbine by up to 5 dBA
Specifications are not warranted and are subject to change without notice.

21211 Nordhoff Street • Chatsworth • CA • 91311 • 866.422.7786 • 818.734.5300 • www.capstoneturbine.com
©2010 Capstone Turbine Corporation. P0911 C65 & C65 ICHP Data Sheet CAP139 | Capstone P/N 331035E

Capstone Turbine Corporation • 21211 Nordhoff Street • Chatsworth • CA 91311 • USA
Phone: (818) 734-5300 • Fax: (818) 734-5320 • Web: www.microturbine.com

Technical Reference

Capstone MicroTurbine™ Systems Emissions

Summary

Capstone MicroTurbine™ systems are inherently clean and can meet some of the strictest emissions standards in the world. This technical reference is to provide customers with information that may be requested by local air permitting organizations or to compare air quality impacts of different technologies for a specific project. The preferred units of measure are "output based"; meaning that the quantity of a particular exhaust emission is reported relative to the useable output of the microturbine – typically in pounds per megawatt hour for electrical generating equipment. This technical reference also provides volumetric measurements in parts per million and milligrams per normal cubic meter. A conversion between several common units is also provided.

Maximum Exhaust Emissions at ISO Conditions

Table 1 below summarizes the exhaust emissions at full power and ISO conditions for different Capstone microturbine models. Note that the fuel can have a significant impact on certain emissions. For example landfill and digester gas can be made up of a wide variety of fuel elements and impurities, and typically contains some percentage of carbon dioxide (CO_2). This CO_2 dilutes the fuel, makes complete combustion more difficult, and results in higher carbon monoxide emissions (CO) than for pipeline-quality natural gas.

Table 1. Emission for Different Capstone Microturbine Models in [lb/MWhe]

Model	Fuel	NOx	CO	VOC (5)
C30 NG	Natural Gas (1)	0.64	1.8	0.23
CR30 MBTU	Landfill Gas (2)	0.64	22.0	1.00
CR30 MBTU	Digester Gas (3)	0.64	11.0	1.00
C30 Liquid	Diesel #2 (4)	2.60	0.41	0.23
C65 NG Standard	Natural Gas (1)	0.46	1.25	0.10
C65 NG Low NOx	Natural Gas (1)	0.17	1.30	0.10
C65 NG CARB	Natural Gas (1)	0.17	0.24	0.05
CR65 Landfill	Landfill Gas (2)	0.46	4.0	0.10
CR65 Digester	Digester Gas (3)	0.46	4.0	0.10
C200 NG	Natural Gas (1)	0.40	1.10	0.10
C200 NG CARB	Natural Gas (1)	0.14	0.20	0.04
CR200 Digester	Digester Gas (3)	0.40	3.6	0.10

Notes:

(1) Emissions for standard natural gas at 1,000 BTU/scf (HHV) or 39.4 MJ/m3 (HHV)
(2) Emissions for surrogate gas containing 42% natural gas, 39% CO2, and 19% Nitrogen
(3) Emissions for surrogate gas containing 63% natural gas and 37% CO2
(4) Emissions for Diesel #2 according to ASTM D975-07b
(5) Expressed as Methane

Capstone reserves the right to change or modify, without notice, the design, specifications, and/or contents of this document without incurring any obligation either with respect to equipment previously sold or in the process of construction.

ED_004016Q_00002229-00144

Table 2 provides the same output-based information shown in Table 1, but expressed in grams per horsepower hour (g/hp-hr).

Table 2. Emission for Different Capstone Microturbine Models in [g/hp-hr]

Model	Fuel	NOx	CO	VOC (5)
C30 NG	Natural Gas (1)	0.22	0.60	0.078
CR30 MBTU	Landfill Gas (2)	0.22	7.4	0.340
CR30 MBTU	Digester Gas (3)	0.22	3.7	0.340
C30 Liquid	Diesel #2 (4)	0.90	0.14	0.078
C65 NG Standard	Natural Gas (1)	0.16	0.42	0.034
C65 NG Low NOx	Natural Gas (1)	0.06	0.44	0.034
C65 NG CARB	Natural Gas (1)	0.06	0.08	0.017
CR65 Landfill	Landfill Gas (2)	0.16	1.4	0.034
CR65 Digester	Digester Gas (3)	0.16	1.4	0.034
C200 NG	Natural Gas (1)	0.14	0.37	0.034
C200 NG CARB	Natural Gas (1)	0.05	0.07	0.014
CR200 Digester	Digester Gas (3)	0.14	1.3	0.034

Notes: - same as for Table 1

Emissions may also be reported on a volumetric basis, with the most common unit of measurement being parts per million. This is typically a measurement that is corrected to specific oxygen content in the exhaust and without considering moisture content. The abbreviation for this unit of measurement is "ppmvd" (parts per million by volume, dry) and is corrected to 15% oxygen for electrical generating equipment such as microturbines. The relationship between an output based measurement like pounds per MWh and a volumetric measurement like ppmvd depends on the characteristics of the generating equipment and the molecular weight of the criteria pollutant being measured. Table 3 expresses the emissions in ppmvd at 15% oxygen for the Capstone microturbine models shown in Table 1. Note that raw measurements expressed in ppmv will typically be lower than the corrected values shown in Table 3 because the microturbine exhaust has greater than 15% oxygen.

Another volumetric unit of measurement expresses the mass of a specific criteria pollutant per standard unit of volume. Table 4 expresses the emissions in milligrams per normal cubic meter at 15% oxygen. Normal conditions for this purpose are expresses as one atmosphere of pressure and zero degrees Celsius. Note that both the ppmvd and mg/m3 measurements are for specific oxygen content. A conversion can be made to adjust either unit of measurement to other reference oxygen contents, if required. Use the equation below to convert from one reference oxygen content to another:

$$\text{Emissions at New } O_2 = \frac{(20.9 - \text{New } O_2 \text{ Percent})}{(20.9 - \text{Current } O_2 \text{ Percent})} \times \text{Emissions at Current } O_2$$

For example, to express 9 ppmvd of NOx at 15% oxygen to ppmvd at 3% oxygen:

$$\text{Emissions at 3\% } O_2 = \frac{(20.9 - 3.0)}{(20.9 - 15.0)} \times 9 = 27 \text{ ppmvd}$$

Capstone reserves the right to change or modify, without notice, the design, specifications, and/or contents of this document without incurring any obligation either with respect to equipment previously sold or in the process of construction.

Table 3. Emission for Different Capstone Microturbine Models in [ppmvd] at 15% O_2

Model	Fuel	NOx	CO	VOC
C30 NG	Natural Gas (1)	9	40	9
CR30 MBTU	Landfill Gas (2)	9	500	40
CR30 MBTU	Digester Gas (3)	9	250	40
C30 Liquid	Diesel #2 (4)	35	9	9
C65 NG Standard	Natural Gas (1)	9	40	7
C65 NG Low NOx	Natural Gas (1)	4	40	7
C65 NG CARB	Natural Gas (1)	4	8	3
CR65 Landfill	Landfill Gas (2)	9	130	7
CR65 Digester	Digester Gas (3)	9	130	7
C200 NG	Natural Gas (1)	9	40	7
C200 NG CARB	Natural Gas (1)	4	8	3
CR200 Digester	Digester Gas (3)	9	130	7

Notes: same as Table 1

Table 4. Emission for Different Capstone Microturbine Models in [mg/m3] at 15% O_2

Model	Fuel	NOx	CO	VOC (5)
C30 NG	Natural Gas (1)	18	50	6
CR30 MBTU	Landfill Gas (2)	18	620	30
CR30 MBTU	Digester Gas (3)	18	310	30
C30 Liquid	Diesel #2 (4)	72	11	6
C65 NG Standard	Natural Gas (1)	19	50	5
C65 NG Low NOx	Natural Gas (1)	8	50	5
C65 NG CARB	Natural Gas (1)	8	9	2
CR65 Landfill	Landfill Gas (2)	18	160	5
CR65 Digester	Digester Gas (3)	18	160	5
C200 NG	Natural Gas (1)	18	50	5
C200 NG CARB	Natural Gas (1)	8	9	2
CR200 Digester	Digester Gas (3)	18	160	5

Notes: same as Table 1

The emissions stated in Tables 1, 2, 3 and 4 are guaranteed by Capstone for new microturbines during the standard warranty period. They are also the expected emissions for a properly maintained microturbine according to manufacturer's published maintenance schedule for the useful life of the equipment.

Emissions at Full Power but Not at ISO Conditions

The maximum emissions in Tables 1, 2, 3 and 4 are at full power under ISO conditions. These levels are also the expected values at full power operation over the published allowable ambient temperature and elevation ranges.

Capstone reserves the right to change or modify, without notice, the design, specifications, and/or contents of this document without incurring any obligation either with respect to equipment previously sold or in the process of construction.

Emissions at Part Power

Capstone microturbines are designed to maintain combustion stability and low emissions over a wide operating range. Capstone microturbines utilize multiple fuel injectors, which are switched on or off depending on the power output of the turbine. All injectors are typically on when maximum power is demanded, regardless of the ambient temperature or elevation. As the load requirements of the microturbine are decreased, injectors will be switched off to maintain stability and low emissions. However, the emissions relative to the lower power output may increase. This effect differs for each microturbine model.

Emissions Calculations for Permitting

Air Permitting agencies are normally concerned with the maximum amount of a given pollutant being emitted per unit of time (for example pounds per day of NOx). The simplest way to make this calculation is to use the maximum microturbine full electrical power output (expressed in MW) multiplied by the emissions rate in pounds per MWhe times the number of hours per day. For example, the C65 CARB microturbine operating on natural gas would have a NOx emissions rate of:

NOx = .17 X (65/1000) X 24 = .27 pounds per day

This would be representative of operating the equipment full time, 24 hours per day, at full power output of 65 kWe.

As a general rule, if local permitting is required, use the published agency levels as the stated emissions for the permit and make sure that this permitted level is above the calculated values in this technical reference.

Consideration of Useful Thermal Output

Capstone microturbines are often deployed where their clean exhaust can be used to provide heating or cooling, either directly or using hot water or other heat transfer fluids. In this case, the local permitting or standards agencies will usually consider the emissions from traditional heating sources as being displaced by the useful thermal output of the microturbine exhaust energy. This increases the useful output of the microturbine, and decreases the relative emissions of the combined heat and power system. For example, the CARB version C65 ICHP system with integral heat recovery can achieve a total system efficiency of 70% or more, depending on inlet water temperatures and other installation-specific characteristics. The electric efficiency of the CARB version C65 microturbine is 28% at ISO conditions. This means that the total NOx output based emissions, including the captured thermal value, is the electric-only emissions times the ratio of electric efficiency divided by total system efficiency:

NOx = .17 X 28/70 = .068 pounds per MWh (based on total system output)

This is typically much less than the emissions that would result from providing electric power using traditional central power plants, plus the emissions from a local hot water heater or boiler. In fact microturbine emissions are so low compared with traditional hot water heaters that installing a Capstone microturbine with heat recovery can actually decrease the local emissions of NOx and other criteria pollutants, without even considering the elimination of emissions from a remote power plant.

Capstone reserves the right to change or modify, without notice, the design, specifications, and/or contents of this document without incurring any obligation either with respect to equipment previously sold or in the process of construction.

Greenhouse Gas Emissions

Many gasses are considered "greenhouse gasses", and agencies have ranked them based on their global warming potential (GWP) in the atmosphere compared with carbon dioxide (CO_2), as well as their ability to maintain this effect over time. For example, methane is a greenhouse gas with a GWP of 21. Criteria pollutants like NOx and organic compounds like methane are monitored by local air permitting authorities, and are subject to strong emissions controls. Even though some of these criteria pollutants can be more troublesome for global warming than CO_2, they are released in small quantities – especially from Capstone microturbines. So the major contributor of concern is carbon dioxide, or CO_2. Emission of CO_2 depends on two things:

1. Carbon content in the fuel
2. Efficiency of converting fuel to useful energy

It is for these reasons that many local authorities are focused on using clean fuels (for example natural gas compared with diesel fuel), achieving high efficiency using combined heat and power systems, and displacing emissions from traditional power plants using renewable fuels like waste landfill and digester gasses.

Table 5 shows the typical CO_2 emissions due to combustion for different Capstone microturbine models at full power and ISO conditions. The values do not include CO_2 that may already exist in the fuel itself, which is typical for renewable fuels like landfill and digester gas. These values are expressed on an output basis, as is done for criteria pollutants in Table 1. The table shows the pounds per megawatt hour based on electric power output only, as well as considering total useful output in a CHP system with total 70% efficiency (LHV). As for criteria pollutants, the relative quantity of CO_2 released is substantially less when useful thermal output is also considered in the measurement.

Table 5. CO_2 Emission for Capstone Microturbine Models in [lb/MWh]

Model	Fuel	CO_2	
		Electric Only	70% Total CHP
C30 NG	Natural Gas (1)	1,690	625
CR30 MBTU	Landfill Gas (1)	1,690	625
CR30 MBTU	Digester Gas (1)	1,690	625
C30 Liquid	Diesel #2 (2)	2,400	855
C65 NG Standard	Natural Gas (1)	1,520	625
C65 NG Low NOx	Natural Gas (1)	1,570	625
C65 NG CARB	Natural Gas (1)	1,570	625
CR65 Landfill	Landfill Gas (1)	1,520	625
CR65 Digester	Digester Gas (1)	1,520	625
C200 NG	Natural Gas (1)	1,330	625
C200 NG CARB	Natural Gas (1)	1,330	625
CR200 Digester	Digester Gas (1)	1,330	625

Notes:

(1) Emissions due to combustion, assuming natural gas with CO_2 content of 117 lb/MMBTU (HHV)

(2) Emissions due to combustion, assuming diesel fuel with CO_2 content of 160 lb/MMBTU (HHV)

Capstone reserves the right to change or modify, without notice, the design, specifications, and/or contents of this document without incurring any obligation either with respect to equipment previously sold or in the process of construction.

Useful Conversions

The conversions shown in Table 6 can be used to obtain other units of emissions outputs. These are approximate conversions.

Table 6. Useful Unit Conversions

From	Multiply By	To Get
lb/MWh	0.338	g/bhp-hr
g/bhp-hr	2.96	lb/MWh
lb	0.454	kg
kg	2.20	lb
kg	1,000	g
hp (electric)	.746	kW
kW	1.34	hp (electric)
MW	1,000	kW
kW	0.001	MW

Definitions

- ISO conditions are defined as: 15 °C (59 °F), 60% relative humidity, and sea level pressure of 101.3 kPa (14.696 psia).
- HHV: Higher Heating Value
- LHV: Lower Heating Value
- kW_{th}: Kilowatt (thermal)
- kW_e : Kilowatt (electric)
- MWh: Megawatt-hour
- hp-hr: horsepower-hour (sometimes referred to as “electric horsepower-hour”)
- Scf: Standard cubic foot (standard references ISO temperature and pressure)
- m3: Normal cubic meter (normal references 0 °C and one atmosphere pressure)

Capstone Contact Information

If questions arise regarding this technical reference, please contact Capstone Turbine Corporation for assistance and information:

Capstone Applications

Toll Free Telephone: (866) 4-CAPSTONE or (866) 422-7786

Fax: (818) 734-5385

E-mail: applications@capstoneturbine.com

Capstone reserves the right to change or modify, without notice, the design, specifications, and/or contents of this document without incurring any obligation either with respect to equipment previously sold or in the process of construction.

C200 MicroTurbine
High-pressure Natural Gas

World's largest air-bearing microturbine produces 200kW of clean, green, and reliable power.

- Ultra-low emissions
- One moving part – minimal maintenance and downtime
- Patented air bearing – no lubricating oil or coolant
- 5 and 9 year Factory Protection Plans available
- Remote monitoring and diagnostic capabilities
- Integrated utility synchronization and protection
- Small, modular design allows for easy, low-cost installation
- Proven technology with tens of millions of run hours and counting
- Internal fuel gas compressor available for low fuel pressure natural gas applications

C200 MicroTurbine

Electrical Performance[1]

Electrical Power Output	200kW
Voltage	400–480 VAC
Electrical Service	3-Phase, 4 wire
Frequency	50/60 Hz, grid connect operation
	10–60 Hz, stand alone operation
Maximum Output Current	290A RMS @ 400V, grid connect operation
	240A RMS @ 480V, grid connect operation
	310A RMS, stand alone operation[2]
Electrical Efficiency LHV	33%

Fuel/Engine Characteristics[1]

Natural Gas HHV	30.7–47.5 MJ/m^3 (825–1,275 BTU/scf)
Inlet Pressure[3]	517–552 kPa gauge (75–80 psig)
Fuel Flow HHV	2,400 MJ/hr (2,280,000 BTU/hr)
Net Heat Rate LHV	10.9 MJ/kWh (10,300 BTU/kWh)

Exhaust Characteristics[1]

NOx Emissions @ 15% O_2[4]	< 9 ppmvd (18 mg/m^3)
NOx / Electrical Output[4]	0.14 g/bhp-hr (0.4 lb/MWhe)
Exhaust Gas Flow	1.3 kg/s (2.9 lbm/s)
Exhaust Gas Temperature	280°C (535°F)
Exhaust Energy	1,420 MJ/hr (1,350,000 BTU/hr)

Reliable power when and where you need it. Clean and simple.

Dimensions & Weight[5]

Width x Depth x Height[6]	1.7 x 3.8 x 2.5 m (67 x 150 x 98 in)
Weight – Grid Connect Model	2776 kg (6,120 lb)
Weight – Dual Mode Model	3413 kg (7,525 lb)

Minimum Clearance Requirements[7]

Vertical Clearance	0.6 m (24 in)
Horizontal Clearance	
Left & Right	1.1 m (42 in)
Front	1.1 m (42 in)
Rear	1.8 m (70 in)

Sound Levels

Acoustic Emissions at Full Load Power	
Nominal at 10 m (33 ft)	65 dBA

Certifications

- UL 2200 and UL 1741 natural gas operation[8]
- Complies with IEEE 1547 and meets statewide utility interconnection requirements for California Rule 21 and the New York State Public Service Commission
- CE certified

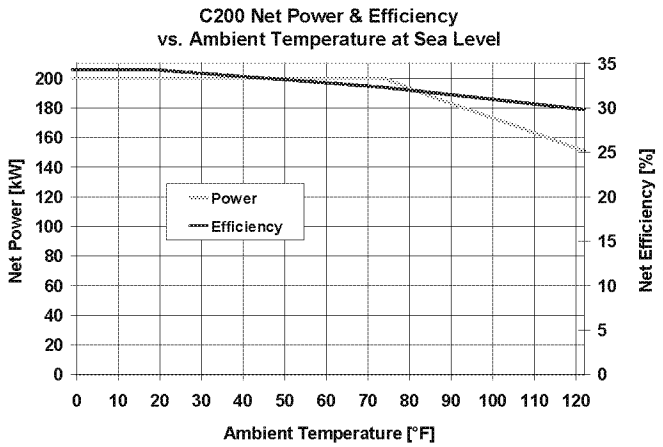

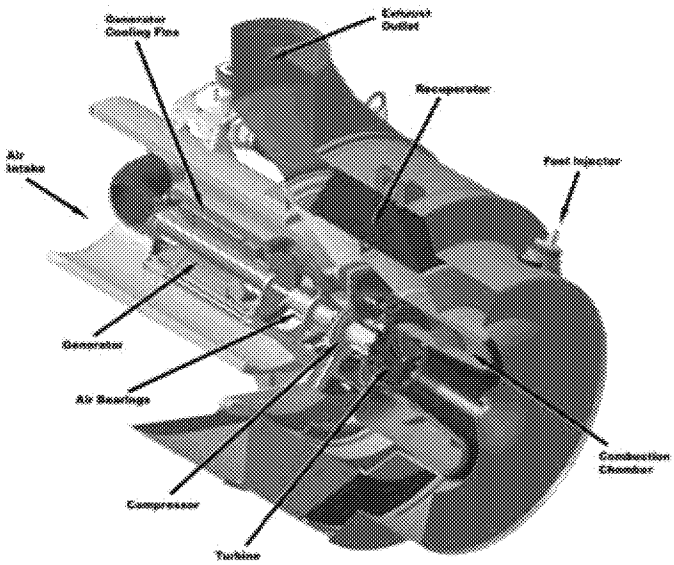

(1) Nominal full power performance at ISO conditions: 59°F, 14.696 psia, 60% RH
(2) With linear load
(3) Inlet pressure for standard natural gas at 39.4 MJ/Nm³ (1,000 BTU/scf) (HHV)
(4) Emissions for standard natural gas at 39.4 MJ/Nm³ (1,000 BTU/scf) (HHV)
(5) Approximate dimensions and weight
(6) Height dimensions are to the roof line. Exhaust outlet extends at least 8 inches above the roof line
(7) Clearance requirements may increase due to local code considerations
(8) All natural gas models are planned to be UL Listed

Specifications are not warranted and are subject to change without notice.

21211 Nordhoff Street • Chatsworth • CA • 91311 • 866.422.7786 • 818.734.5300 • www.capstoneturbine.com
©2010 Capstone Turbine Corporation. P0911 C200 HP Natural Gas Data Sheet CAP146 | Capstone P/N 331042E

CR200 MicroTurbine Renewable Fuels

World's largest air-bearing microturbine produces 200kW of clean, green, and reliable power.

- Ultra-low emissions
- Accepts renewable fuels with up to 5,000 ppm H_2S content
- One moving part – minimal maintenance and downtime
- Patented air bearing – no lubricating oil or coolant
- 5 and 9 year Factory Protection Plans available
- Remote monitoring and diagnostic capabilities
- Integrated utility synchronization and protection
- Small, modular design allows for easy, low-cost installation
- Proven technology with tens of millions of run hours and counting

C200 MicroTurbine

Electrical Performance[1]

Electrical Power Output[2]	200kW
Voltage	400–480 VAC
Electrical Service	3-Phase, 4 wire
Frequency	50/60 Hz
Maximum Output Current	290A RMS @ 400V, grid connect operation
	240A RMS @ 480V, grid connect operation
Electrical Efficiency LHV	33%

Fuel/Engine Characteristics[1]

Landfill Gas HHV	13.0–22.3 MJ/m³ (350–600 BTU/scf)
Digester Gas HHV	20.5–32.6 MJ/m³ (550–875 BTU/scf)
Inlet Pressure	517–552 kPa gauge (75–80 psig)
Fuel Flow HHV	2,400 MJ/hr (2,280,000 BTU/hr)
Net Heat Rate LHV	10.9 MJ/kWh (10,300 BTU/kWh)
H_2S content	< 5,000 ppmv

Exhaust Characteristics[1]

NOx Emissions @ 15% O_2[3]	< 9 ppmvd (18 mg/m³)
NOx / Electrical Output[3]	0.14 g/bhp-hr (0.40 lb/MWhe)
Exhaust Gas Flow	1.3 kg/s (2.9 lbm/s)
Exhaust Gas Temperature	280°C (535°F)
Exhaust Energy	1,420 MJ/hr (1,350,000 BTU/hr)

Reliable power when and where you need it. Clean and simple.

Dimensions & Weight[4]

Width x Depth x Height[5]	1.7 x 3.8 x 2.5 m (67 x 150 x 98 in)
Weight	2776 kg (6,120 lb)

Minimum Clearance Requirements[6]

Vertical Clearance	0.6 m (24 in)
Horizontal Clearance	
Left & Right	1.1 m (42 in)
Front	1.1 m (42 in)
Rear	1.8 m (70 in)

Sound Levels

Acoustic Emissions at Full Load Power	
Nominal at 10 m (33 ft)	65 dBA

Planned Certifications

- Will comply with UL 2200 and UL 1741 for raw natural gas and biogas operation under existing UL files[7]
- Will comply with IEEE 1547 and will meet statewide utility interconnection requirements for California Rule 21 and the New York State Public Service Commission
- Models will be available with optional equipment for CE marking
- Models will be available with optional 2008 CARB certification for waste gas

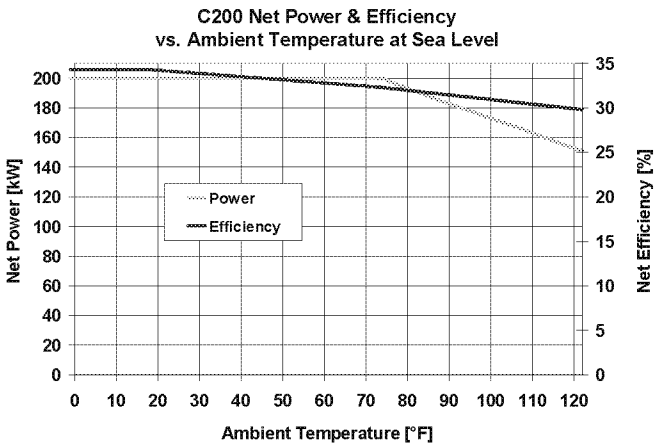

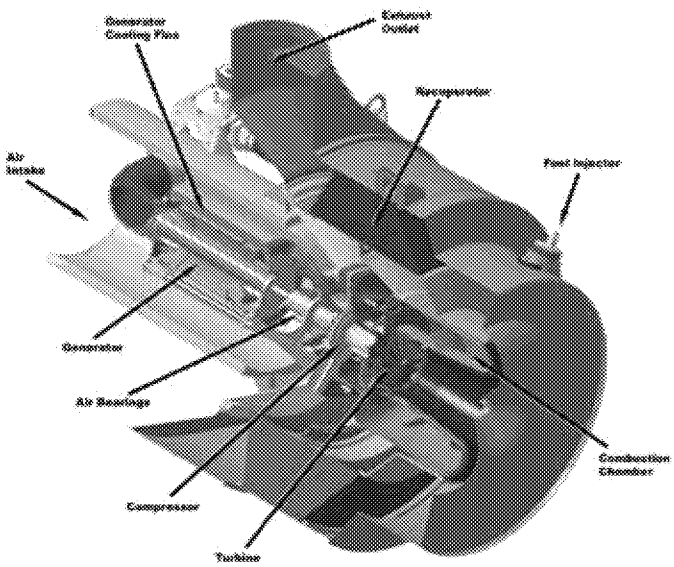

(1) Nominal full power performance at ISO conditions: 59°F, 14.696 psia, 60% RH
(2) Minimum power output is 100kW for these fuels. Additional fuel gas conditioning required. Contact Capstone for specific application guidance
(3) For surrogate landfill and digester gases. Please contact Capstone for additional details
(4) Approximate dimensions and weights
(5) Height dimensions are to the roof line. Exhaust outlet extends at least 8 inches above the roof line
(6) Clearance requirements may increase due to local code considerations
(7) All models are planned to be UL Listed or available with optional equipment for CE marking

Specifications are not warranted and are subject to change without notice.

21211 Nordhoff Street • Chatsworth • CA • 91311 • 866.422.7786 • 818.734.5300 • www.capstoneturbine.com
©2010 Capstone Turbine Corporation. P0911 CR200 Renewable Fuels Data Sheet CAP147 | Capstone P/N 331043E

Table 1.4-1. EMISSION FACTORS FOR NITROGEN OXIDES (NO_x) AND CARBON MONOXIDE (CO) FROM NATURAL GAS COMBUSTION[a]

Combustor Type (MMBtu/hr Heat Input) [SCC]	NO_x[b]		CO	
	Emission Factor ($lb/10^6$ scf)	Emission Factor Rating	Emission Factor ($lb/10^6$ scf)	Emission Factor Rating
Large Wall-Fired Boilers (>100) [1-01-006-01, 1-02-006-01, 1-03-006-01]				
Uncontrolled (Pre-NSPS)[c]	280	A	84	B
Uncontrolled (Post-NSPS)[c]	190	A	84	B
Controlled - Low NO_x burners	140	A	84	B
Controlled - Flue gas recirculation	100	D	84	B
Small Boilers (<100) [1-01-006-02, 1-02-006-02, 1-03-006-02, 1-03-006-03]				
Uncontrolled	100	B	84	B
Controlled - Low NO_x burners	50	D	84	B
Controlled - Low NO_x burners/Flue gas recirculation	32	C	84	B
Tangential-Fired Boilers (All Sizes) [1-01-006-04]				
Uncontrolled	170	A	24	C
Controlled - Flue gas recirculation	76	D	98	D
Residential Furnaces (<0.3) [No SCC]				
Uncontrolled	94	B	40	B

[a] Reference 11. Units are in pounds of pollutant per million standard cubic feet of natural gas fired. To convert from $lb/10^6$ scf to $kg/10^6$ m^3, multiply by 16. Emission factors are based on an average natural gas higher heating value of 1,020 Btu/scf. To convert from $lb/10^6$ scf to lb/MMBtu, divide by 1,020. The emission factors in this table may be converted to other natural gas heating values by multiplying the given emission factor by the ratio of the specified heating value to this average heating value. SCC = Source Classification Code. ND = no data. NA = not applicable.

[b] Expressed as NO_2. For large and small wall fired boilers with SNCR control, apply a 24 percent reduction to the appropriate NO_X emission factor. For tangential-fired boilers with SNCR control, apply a 13 percent reduction to the appropriate NO_X emission factor.

[c] NSPS=New Source Performance Standard as defined in 40 CFR 60 Subparts D and Db. Post-NSPS units are boilers with greater than 250 MMBtu/hr of heat input that commenced construction modification, or reconstruction after August 17, 1971, and units with heat input capacities between 100 and 250 MMBtu/hr that commenced construction modification, or reconstruction after June 19, 1984.

TABLE 1.4-2. EMISSION FACTORS FOR CRITERIA POLLUTANTS AND GREENHOUSE GASES FROM NATURAL GAS COMBUSTION[a]

Pollutant	Emission Factor ($lb/10^6$ scf)	Emission Factor Rating
CO_2[b]	120,000	A
Lead	0.0005	D
N_2O (Uncontrolled)	2.2	E
N_2O (Controlled-low-NO_X burner)	0.64	E
PM (Total)[c]	7.6	D
PM (Condensable)[c]	5.7	D
PM (Filterable)[c]	1.9	B
SO_2[d]	0.6	A
TOC	11	B
Methane	2.3	B
VOC	5.5	C

[a] Reference 11. Units are in pounds of pollutant per million standard cubic feet of natural gas fired. Data are for all natural gas combustion sources. To convert from $lb/10^6$ scf to $kg/10^6$ m^3, multiply by 16. To convert from $lb/10^6$ scf to 1b/MMBtu, divide by 1,020. The emission factors in this table may be converted to other natural gas heating values by multiplying the given emission factor by the ratio of the specified heating value to this average heating value. TOC = Total Organic Compounds. VOC = Volatile Organic Compounds.

[b] Based on approximately 100% conversion of fuel carbon to CO_2. $CO_2[lb/10^6 scf] = (3.67)(CON)(C)(D)$, where CON = fractional conversion of fuel carbon to CO_2, C = carbon content of fuel by weight (0.76), and D = density of fuel, $4.2x10^4$ $lb/10^6$ scf.

[c] All PM (total, condensible, and filterable) is assumed to be less than 1.0 micrometer in diameter. Therefore, the PM emission factors presented here may be used to estimate PM_{10}, $PM_{2.5}$ or PM_1 emissions. Total PM is the sum of the filterable PM and condensible PM. Condensible PM is the particulate matter collected using EPA Method 202 (or equivalent). Filterable PM is the particulate matter collected on, or prior to, the filter of an EPA Method 5 (or equivalent) sampling train.

[d] Based on 100% conversion of fuel sulfur to SO_2. Assumes sulfur content is natural gas of 2,000 grains/10^6 scf. The SO_2 emission factor in this table can be converted to other natural gas sulfur contents by multiplying the SO_2 emission factor by the ratio of the site-specific sulfur content (grains/10^6 scf) to 2,000 grains/10^6 scf.

ED_004016Q_00002229-00155

TABLE 1.4-3. EMISSION FACTORS FOR SPECIATED ORGANIC COMPOUNDS FROM NATURAL GAS COMBUSTION[a]

CAS No.	Pollutant	Emission Factor ($lb/10^6$ scf)	Emission Factor Rating
91-57-6	2-Methylnaphthalene[b, c]	2.4E-05	D
56-49-5	3-Methylchloranthrene[b, c]	<1.8E-06	E
	7,12-Dimethylbenz(a)anthracene[b,c]	<1.6E-05	E
83-32-9	Acenaphthene[b,c]	<1.8E-06	E
203-96-8	Acenaphthylene[b,c]	<1.8E-06	E
120-12-7	Anthracene[b,c]	<2.4E-06	E
56-55-3	Benz(a)anthracene[b,c]	<1.8E-06	E
71-43-2	Benzene[b]	2.1E-03	B
50-32-8	Benzo(a)pyrene[b,c]	<1.2E-06	E
205-99-2	Benzo(b)fluoranthene[b,c]	<1.8E-06	E
191-24-2	Benzo(g,h,i)perylene[b,c]	<1.2E-06	E
205-82-3	Benzo(k)fluoranthene[b,c]	<1.8E-06	E
106-97-8	Butane	2.1E+00	E
218-01-9	Chrysene[b,c]	<1.8E-06	E
53-70-3	Dibenzo(a,h)anthracene[b,c]	<1.2E-06	E
25321-22-6	Dichlorobenzene[b]	1.2E-03	E
74-84-0	Ethane	3.1E+00	E
206-44-0	Fluoranthene[b,c]	3.0E-06	E
86-73-7	Fluorene[b,c]	2.8E-06	E
50-00-0	Formaldehyde[b]	7.5E-02	B
110-54-3	Hexane[b]	1.8E+00	E
193-39-5	Indeno(1,2,3-cd)pyrene[b,c]	<1.8E-06	E
91-20-3	Naphthalene[b]	6.1E-04	E
109-66-0	Pentane	2.6E+00	E
85-01-8	Phenanathrene[b,c]	1.7E-05	D

ED_004016Q_00002229-00156

TABLE 1.4-3. EMISSION FACTORS FOR SPECIATED ORGANIC COMPOUNDS FROM NATURAL GAS COMBUSTION (Continued)

CAS No.	Pollutant	Emission Factor ($lb/10^6$ scf)	Emission Factor Rating
74-98-6	Propane	1.6E+00	E
129-00-0	Pyrene[b, c]	5.0E-06	E
108-88-3	Toluene[b]	3.4E-03	C

[a] Reference 11. Units are in pounds of pollutant per million standard cubic feet of natural gas fired. Data are for all natural gas combustion sources. To convert from $lb/10^6$ scf to $kg/10^6$ m^3, multiply by 16. To convert from $1b/10^6$ scf to lb/MMBtu, divide by 1,020. Emission Factors preceeded with a less-than symbol are based on method detection limits.

[b] Hazardous Air Pollutant (HAP) as defined by Section 112(b) of the Clean Air Act.

[c] HAP because it is Polycyclic Organic Matter (POM). POM is a HAP as defined by Section 112(b) of the Clean Air Act.

[d] The sum of individual organic compounds may exceed the VOC and TOC emission factors due to differences in test methods and the availability of test data for each pollutant.

ED_004016Q_00002229-00157

Table 3.2-2. UNCONTROLLED EMISSION FACTORS FOR 4-STROKE LEAN-BURN ENGINES[a]
(SCC 2-02-002-54)

Pollutant	Emission Factor (lb/MMBtu)[b] (fuel input)	Emission Factor Rating
Criteria Pollutants and Greenhouse Gases		
NO_x[c] 90 - 105% Load	4.08 E+00	B
NO_x[c] <90% Load	8.47 E-01	B
CO[c] 90 - 105% Load	3.17 E-01	C
CO[c] <90% Load	5.57 E-01	B
CO_2[d]	1.10 E+02	A
SO_2[e]	5.88 E-04	A
TOC[f]	1.47 E+00	A
Methane[g]	1.25 E+00	C
VOC[h]	1.18 E-01	C
PM10 (filterable)[i]	7.71 E-05	D
PM2.5 (filterable)[i]	7.71 E-05	D
PM Condensable[j]	9.91 E-03	D
Trace Organic Compounds		
1,1,2,2-Tetrachloroethane[k]	<4.00 E-05	E
1,1,2-Trichloroethane[k]	<3.18 E-05	E
1,1-Dichloroethane	<2.36 E-05	E
1,2,3-Trimethylbenzene	2.30 E-05	D
1,2,4-Trimethylbenzene	1.43 E-05	C
1,2-Dichloroethane	<2.36 E-05	E
1,2-Dichloropropane	<2.69 E-05	E
1,3,5-Trimethylbenzene	3.38 E-05	D
1,3-Butadiene[k]	2.67E-04	D
1,3-Dichloropropene[k]	<2.64 E-05	E
2-Methylnaphthalene[k]	3.32 E-05	C
2,2,4-Trimethylpentane[k]	2.50 E-04	C
Acenaphthene[k]	1.25 E-06	C

ED_004016Q_00002229-00158

Table 3.2-2. UNCONTROLLED EMISSION FACTORS FOR 4-STROKE LEAN-BURN ENGINES (Continued)

Pollutant	Emission Factor (lb/MMBtu)[b] (fuel input)	Emission Factor Rating
Acenaphthylene[k]	5.53 E-06	C
Acetaldehyde[k,l]	8.36 E-03	A
Acrolein[k,l]	5.14 E-03	A
Benzene[k]	4.40 E-04	A
Benzo(b)fluoranthene[k]	1.66 E-07	D
Benzo(e)pyrene[k]	4.15 E-07	D
Benzo(g,h,i)perylene[k]	4.14 E-07	D
Biphenyl[k]	2.12 E-04	D
Butane	5.41 E-04	D
Butyr/Isobutyraldehyde	1.01 E-04	C
Carbon Tetrachloride[k]	<3.67 E-05	E
Chlorobenzene[k]	<3.04 E-05	E
Chloroethane	1.87 E-06	D
Chloroform[k]	<2.85 E-05	E
Chrysene[k]	6.93 E-07	C
Cyclopentane	2.27 E-04	C
Ethane	1.05 E-01	C
Ethylbenzene[k]	3.97 E-05	B
Ethylene Dibromide[k]	<4.43 E-05	E
Fluoranthene[k]	1.11 E-06	C
Fluorene[k]	5.67 E-06	C
Formaldehyde[k,l]	5.28 E-02	A
Methanol[k]	2.50 E-03	B
Methylcyclohexane	1.23 E-03	C
Methylene Chloride[k]	2.00 E-05	C
n-Hexane[k]	1.11 E-03	C
n-Nonane	1.10 E-04	C

ED_004016Q_00002229-00159

Table 3.2-2. UNCONTROLLED EMISSION FACTORS FOR 4-STROKE LEAN-BURN ENGINES
(Continued)

Pollutant	Emission Factor (lb/MMBtu)[b] (fuel input)	Emission Factor Rating
n-Octane	3.51 E-04	C
n-Pentane	2.60 E-03	C
Naphthalene[k]	7.44 E-05	C
PAH[k]	2.69 E-05	D
Phenanthrene[k]	1.04 E-05	D
Phenol[k]	2.40 E-05	D
Propane	4.19 E-02	C
Pyrene[k]	1.36 E-06	C
Styrene[k]	<2.36 E-05	E
Tetrachloroethane[k]	2.48 E-06	D
Toluene[k]	4.08 E-04	B
Vinyl Chloride[k]	1.49 E-05	C
Xylene[k]	1.84 E-04	B

[a] Reference 7. Factors represent uncontrolled levels. For NO_x, CO, and PM10, "uncontrolled" means no combustion or add-on controls; however, the factor may include turbocharged units. For all other pollutants, "uncontrolled" means no oxidation control; the data set may include units with control techniques used for NOx control, such as PCC and SCR for lean burn engines, and PSC for rich burn engines. Factors are based on large population of engines. Factors are for engines at all loads, except as indicated. SCC = Source Classification Code. TOC = Total Organic Compounds. PM-10 = Particulate Matter ≤ 10 microns (μm) aerodynamic diameter. A "<" sign in front of a factor means that the corresponding emission factor is based on one-half of the method detection limit.

[b] Emission factors were calculated in units of (lb/MMBtu) based on procedures in EPA Method 19. To convert from (lb/MMBtu) to (lb/10^6 scf), multiply by the heat content of the fuel. If the heat content is not available, use 1020 Btu/scf. To convert from (lb/MMBtu) to (lb/hp-hr) use the following equation:

$$\text{lb/hp-hr} = (\text{lb/MMBtu})\ (\text{heat input, MMBtu/hr})\ (1/\text{operating HP, 1/hp})$$

[c] Emission tests with unreported load conditions were not included in the data set.

[d] Based on 99.5% conversion of the fuel carbon to CO_2. CO_2 [lb/MMBtu] = (3.67)(%CON)(C)(D)(1/h), where %CON = percent conversion of fuel carbon to CO_2, C = carbon content of fuel by weight (0.75), D = density of fuel, 4.1 E+04 lb/10^6 scf, and

ED_004016Q_00002229-00160

Table 3.2-3. UNCONTROLLED EMISSION FACTORS FOR 4-STROKE RICH-BURN ENGINES[a]
(SCC 2-02-002-53)

Pollutant	Emission Factor (lb/MMBtu)[b] (fuel input)	Emission Factor Rating
Criteria Pollutants and Greenhouse Gases		
NO_x[c] 90 - 105% Load	2.21 E+00	A
NO_x[c] <90% Load	2.27 E+00	C
CO[c] 90 - 105% Load	3.72 E+00	A
CO[c] <90% Load	3.51 E+00	C
CO_2[d]	1.10 E+02	A
SO_2[e]	5.88 E-04	A
TOC[f]	3.58 E-01	C
Methane[g]	2.30 E-01	C
VOC[h]	2.96 E-02	C
PM10 (filterable)[i,j]	9.50 E-03	E
PM2.5 (filterable)[j]	9.50 E-03	E
PM Condensable[k]	9.91 E-03	E
Trace Organic Compounds		
1,1,2,2-Tetrachloroethane[l]	2.53 E-05	C
1,1,2-Trichloroethane[l]	<1.53 E-05	E
1,1-Dichloroethane	<1.13 E-05	E
1,2-Dichloroethane	<1.13 E-05	E
1,2-Dichloropropane	<1.30 E-05	E
1,3-Butadiene[l]	6.63 E-04	D
1,3-Dichloropropene[l]	<1.27 E-05	E
Acetaldehyde[l,m]	2.79 E-03	C
Acrolein[l,m]	2.63 E-03	C
Benzene[l]	1.58 E-03	B
Butyr/isobutyraldehyde	4.86 E-05	D
Carbon Tetrachloride[l]	<1.77 E-05	E

ED_004016Q_00002229-00161

Table 3.2-3. UNCONTROLLED EMISSION FACTORS FOR 4-STROKE RICH-BURN ENGINES (Concluded)

Pollutant	Emission Factor (lb/MMBtu)[b] (fuel input)	Emission Factor Rating
Chlorobenzene[l]	<1.29 E-05	E
Chloroform[l]	<1.37 E-05	E
Ethane[n]	7.04 E-02	C
Ethylbenzene[l]	<2.48 E-05	E
Ethylene Dibromide[l]	<2.13 E-05	E
Formaldehyde[l,m]	2.05 E-02	A
Methanol[l]	3.06 E-03	D
Methylene Chloride[l]	4.12 E-05	C
Naphthalene[l]	<9.71 E-05	E
PAH[l]	1.41 E-04	D
Styrene[l]	<1.19 E-05	E
Toluene[l]	5.58 E-04	A
Vinyl Chloride[l]	<7.18 E-06	E
Xylene[l]	1.95 E-04	A

[a] Reference 7. Factors represent uncontrolled levels. For NO_X, CO, and PM-10, "uncontrolled" means no combustion or add-on controls; however, the factor may include turbocharged units. For all other pollutants, "uncontrolled" means no oxidation control; the data set may include units with control techniques used for NOx control, such as PCC and SCR for lean burn engines, and PSC for rich burn engines. Factors are based on large population of engines. Factors are for engines at all loads, except as indicated. SCC = Source Classification Code. TOC = Total Organic Compounds. PM10 = Particulate Matter ≤ 10 microns (μm) aerodynamic diameter. A "<" sign in front of a factor means that the corresponding emission factor is based on one-half of the method detection limit.

[b] Emission factors were calculated in units of (lb/MMBtu) based on procedures in EPA Method 19. To convert from (lb/MMBtu) to (lb/10^6 scf), multiply by the heat content of the fuel. If the heat content is not available, use 1020 Btu/scf. To convert from (lb/MMBtu) to (lb/hp-hr) use the following equation:

$$\text{lb/hp-hr} = (\text{lb/MMBtu})(\text{heat input, MMBtu/hr})(1/\text{operating HP, 1/hp})$$

[c] Emission tests with unreported load conditions were not included in the data set.

[d] Based on 99.5% conversion of the fuel carbon to CO_2. CO_2 [lb/MMBtu] = (3.67)(%CON)(C)(D)(1/h), where %CON = percent conversion of fuel carbon to CO_2,

ED_004016Q_00002229-00162

C = carbon content of fuel by weight (0.75), D = density of fuel, 4.1 E+04 lb/10^6 scf, and h = heating value of natural gas (assume 1020 Btu/scf at 60°F).

[e] Based on 100% conversion of fuel sulfur to SO_2. Assumes sulfur content in natural gas of 2,000 gr/10^6scf.

[f] Emission factor for TOC is based on measured emission levels from 6 source tests.

[g] Emission factor for methane is determined by subtracting the VOC and ethane emission factors from the TOC emission factor.

[h] VOC emission factor is based on the sum of the emission factors for all speciated organic compounds. Methane and ethane emissions were not measured for this engine category.

[i] No data were available for uncontrolled engines. PM10 emissions are for engines equipped with a PCC.

[j] Considered ≤ 1 μm in aerodynamic diameter. Therefore, for filterable PM emissions, PM10(filterable) = PM2.5(filterable).

[k] No data were available for condensable emissions. The presented emission factor reflects emissions from 4SLB engines.

[l] Hazardous Air Pollutant as defined by Section 112(b) of the Clean Air Act.

[m] For rich-burn engines, no interference is suspected in quantifying aldehyde emissions. The presented emission factors are based on FTIR and CARB 430 emissions data measurements.

[n] Ethane emission factor is determined by subtracting the VOC emission factor from the NMHC emission factor.

ED_004016Q_00002229-00163

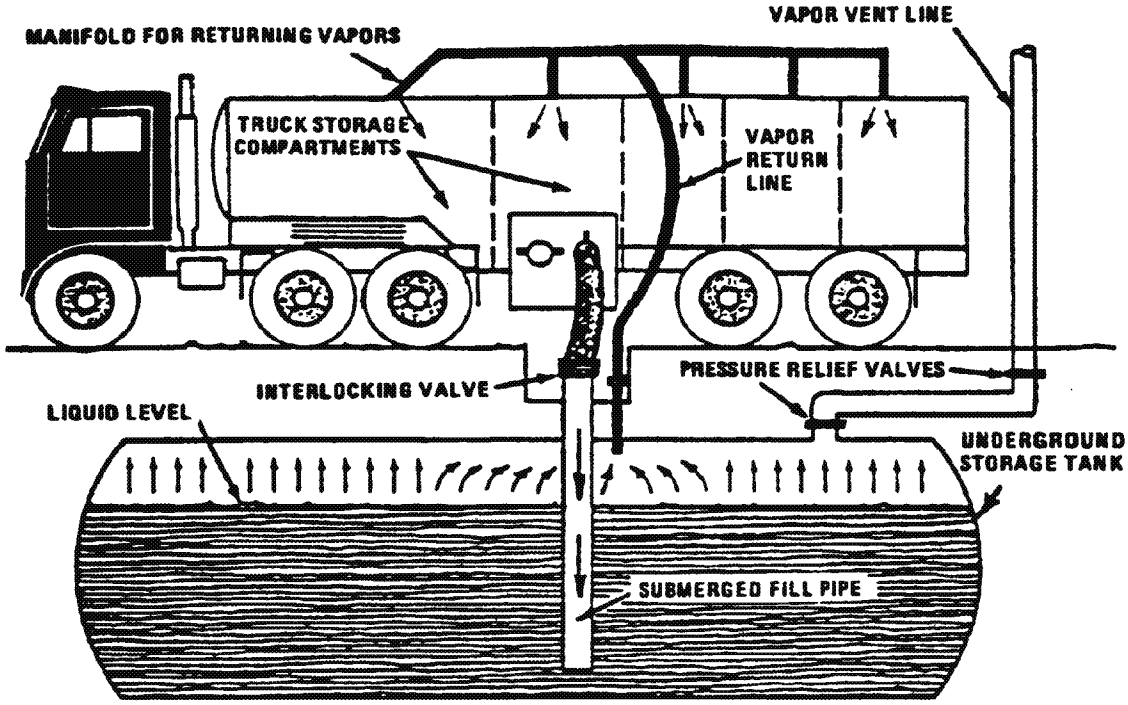

Figure 5.2-5. Tank truck unloading into a service station underground storage tank and practicing "vapor balance" form of emission control.

Table 5.2-1. SATURATION (S) FACTORS FOR CALCULATING PETROLEUM LIQUID LOADING LOSSES

Cargo Carrier	Mode Of Operation	S Factor
Tank trucks and rail tank cars	Submerged loading of a clean cargo tank	0.50
	Submerged loading: dedicated normal service	0.60
	Submerged loading: dedicated vapor balance service	1.00
	Splash loading of a clean cargo tank	1.45
	Splash loading: dedicated normal service	1.45
	Splash loading: dedicated vapor balance service	1.00
Marine vessels[a]	Submerged loading: ships	0.2
	Submerged loading: barges	0.5

[a] For products other than gasoline and crude oil. For marine loading of gasoline, use factors from Table 5.2-2. For marine loading of crude oil, use Equations 2 and 3 and Table 5.2-3.

ED_004016Q_00002229-00164

Table 7.1-2. PROPERTIES (M_V, P_{VA}, W_L) OF SELECTED PETROLEUM LIQUIDS[a]

Petroleum Liquid	Vapor Molecular Weight at 60°F, M_V (lb/lb-mole)	Liquid Density At 60°F, W_L (lb/gal)	True Vapor Pressure, P_{VA} (psi)						
			40°F	50°F	60°F	70°F	80°F	90°F	100°F
Crude oil RVP 5	50	7.1	1.8	2.3	2.8	3.4	4.0	4.8	5.7
Distillate fuel oil No. 2	130	7.1	0.0031	0.0045	0.0065	0.0090	0.012	0.016	0.022
Gasoline RVP 7	68	5.6	2.3	2.9	3.5	4.3	5.2	6.2	7.4
Gasoline RVP 7.8	68	5.6	2.5929	3.2079	3.9363	4.793	5.7937	6.9552	8.2952
Gasoline RVP 8.3	68	5.6	2.7888	3.444	4.2188	5.1284	6.1891	7.4184	8.8344
Gasoline RVP 10	66	5.6	3.4	4.2	5.2	6.2	7.4	8.8	10.5
Gasoline RVP 11.5	65	5.6	4.087	4.9997	6.069	7.3132	8.7519	10.4053	12.2949
Gasoline RVP 13	62	5.6	4.7	5.7	6.9	8.3	9.9	11.7	13.8
Gasoline RVP 13.5	62	5.6	4.932	6.0054	7.2573	8.7076	10.3774	12.2888	14.4646
Gasoline RVP 15.0	60	5.6	5.5802	6.774	8.1621	9.7656	11.6067	13.7085	16.0948
Jet kerosene	130	7.0	0.0041	0.0060	0.0085	0.011	0.015	0.021	0.029
Jet naphtha (JP-4)	80	6.4	0.8	1.0	1.3	1.6	1.9	2.4	2.7
Residual oil No. 6	190	7.9	0.00002	0.00003	0.00004	0.00006	0.00009	0.00013	0.00019

[a] References 10 and 11

ED_004016Q_00002229-00165

Table 13.5-1 (English Units). THC, NOx AND SOOT EMISSIONS FACTORS FOR FLARE OPERATIONS[a]

EMISSIONS FACTOR RATING: B

Pollutant	SCC[d]	Emissions Factor Value	Emissions Factor Units
Total hydrocarbons[b]	30190099; 30119701; 30119705; 30119709; 30119741	0.14	lb/10^6 Btu
Nitrogen oxides[c]		0.068	lb/10^6 Btu
Soot[c]		0 - 274	µg/L

[a] Reference 1. Based on tests using crude propylene containing 80% propylene and 20% propane.
[b] Measured as methane equivalent. The THC emissions factor may not be appropriate for reporting VOC emissions when a VOC emissions factor exists.
[c] Soot in concentration values: nonsmoking flares, 0 micrograms per liter (µg/L); lightly smoking flares, 40 µg/L; average smoking flares, 177 µg/L; and heavily smoking flares, 274 µg/L.
[d] See Table 13.5-3 for a description of these SCCs.

ED_004016Q_00002229-00166

Table 13.5-2 (English Units). VOC and CO EMISSIONS FACTORS FOR FLARE OPERATIONS[a]

Pollutant	SCC[d]	Emissions Factor ($lb/10^6$ Btu)	Representativeness
Volatile organic compounds[b]	30190099; 30600904; 30119701; 30119705; 30119709; 30119741; 30119799; 30130115; 30600201; 30600401; 30600508; 30600903; 30600999; 30601701; 30601801; 30688801; 40600240	0.66	Poorly
Carbon monoxide[c]		0.31	Poorly

[a] These factors apply to well operated flares achieving at least 98% destruction efficiency and operating in compliance with the current General Provisions requirements of 40 CFR Part 60, i.e. >300 btu/scf net heating value in the vent gas and less than the specified maximum flare tip velocity. The VOC emissions factor data set had an average destruction efficiency of 98.9%, and the CO emissions factor data set had an average destruction efficiency of 99.1% (based on test reports where destruction efficiency was provided). These factors are based on steam-assisted and air-assisted flares burning a variety of vent gases.
[b] References 4-9 and 11.
[c] References 1, 4-8 and 11.
[d] See Table 13.5-3 for a description of these SCCs.

ED_004016Q_00002229-00167

The following empirical expressions may be used to estimate the quantity in pounds (lb) of size-specific particulate emissions from an unpaved road, per vehicle mile traveled (VMT):

For vehicles traveling on unpaved surfaces at industrial sites, emissions are estimated from the following equation:

$$E = k\,(s/12)^a (W/3)^b \tag{1a}$$

and, for vehicles traveling on publicly accessible roads, dominated by light duty vehicles, emissions may be estimated from the following:

$$E = \frac{k\,(s/12)^a (S/30)^d}{(M/0.5)^c} - C \tag{1b}$$

where k, a, b, c and d are empirical constants (Reference 6) given below and

E = size-specific emission factor (lb/VMT)
s = surface material silt content (%)
W = mean vehicle weight (tons)
M = surface material moisture content (%)
S = mean vehicle speed (mph)
C = emission factor for 1980's vehicle fleet exhaust, brake wear and tire wear.

The source characteristics s, W and M are referred to as correction parameters for adjusting the emission estimates to local conditions. The metric conversion from lb/VMT to grams (g) per vehicle kilometer traveled (VKT) is as follows:

1 lb/VMT = 281.9 g/VKT

The constants for Equations 1a and 1b based on the stated aerodynamic particle sizes are shown in Tables 13.2.2-2 and 13.2.2-4. The PM-2.5 particle size multipliers (k-factors) are taken from Reference 27.

ED_004016Q_00002229-00168

Table 13.2.2-2. CONSTANTS FOR EQUATIONS 1a AND 1b

Constant	Industrial Roads (Equation 1a)			Public Roads (Equation 1b)		
	PM-2.5	PM-10	PM-30*	PM-2.5	PM-10	PM-30*
k (lb/VMT)	0.15	1.5	4.9	0.18	1.8	6.0
a	0.9	0.9	0.7	1	1	1
b	0.45	0.45	0.45	-	-	-
c	-	-	-	0.2	0.2	0.3
d	-	-	-	0.5	0.5	0.3
Quality Rating	B	B	B	B	B	B

*Assumed equivalent to total suspended particulate matter (TSP)
"-" = not used in the emission factor equation

Table 13.2.2-2 also contains the quality ratings for the various size-specific versions of Equation 1a and 1b. The equation retains the assigned quality rating, if applied within the ranges of source conditions, shown in Table 13.2.2-3, that were tested in developing the equation:

Table 13.2.2-3. RANGE OF SOURCE CONDITIONS USED IN DEVELOPING EQUATION 1a AND 1b

Emission Factor	Surface Silt Content, %	Mean Vehicle Weight		Mean Vehicle Speed		Mean No. of Wheels	Surface Moisture Content, %
		Mg	ton	km/hr	mph		
Industrial Roads (Equation 1a)	1.8-25.2	1.8-260	2-290	8-69	5-43	4-17[a]	0.03-13
Public Roads (Equation 1b)	1.8-35	1.4-2.7	1.5-3	16-88	10-55	4-4.8	0.03-13

[a] See discussion in text.

As noted earlier, the models presented as Equations 1a and 1b were developed from tests of traffic on unpaved surfaces. Unpaved roads have a hard, generally nonporous surface that usually dries quickly after a rainfall or watering, because of traffic-enhanced natural evaporation. (Factors influencing how fast a road dries are discussed in Section 13.2.2.3, below.) The quality ratings given above pertain to the mid-range of the measured source conditions for the equation. A higher mean vehicle weight and a higher than normal traffic rate may be justified when performing a worst-case analysis of emissions from unpaved roads.

The emission factors for the exhaust, brake wear and tire wear of a 1980's vehicle fleet (C) was obtained from EPA's MOBILE6.2 model [23]. The emission factor also varies with aerodynamic size range

ED_004016Q_00002229-00169

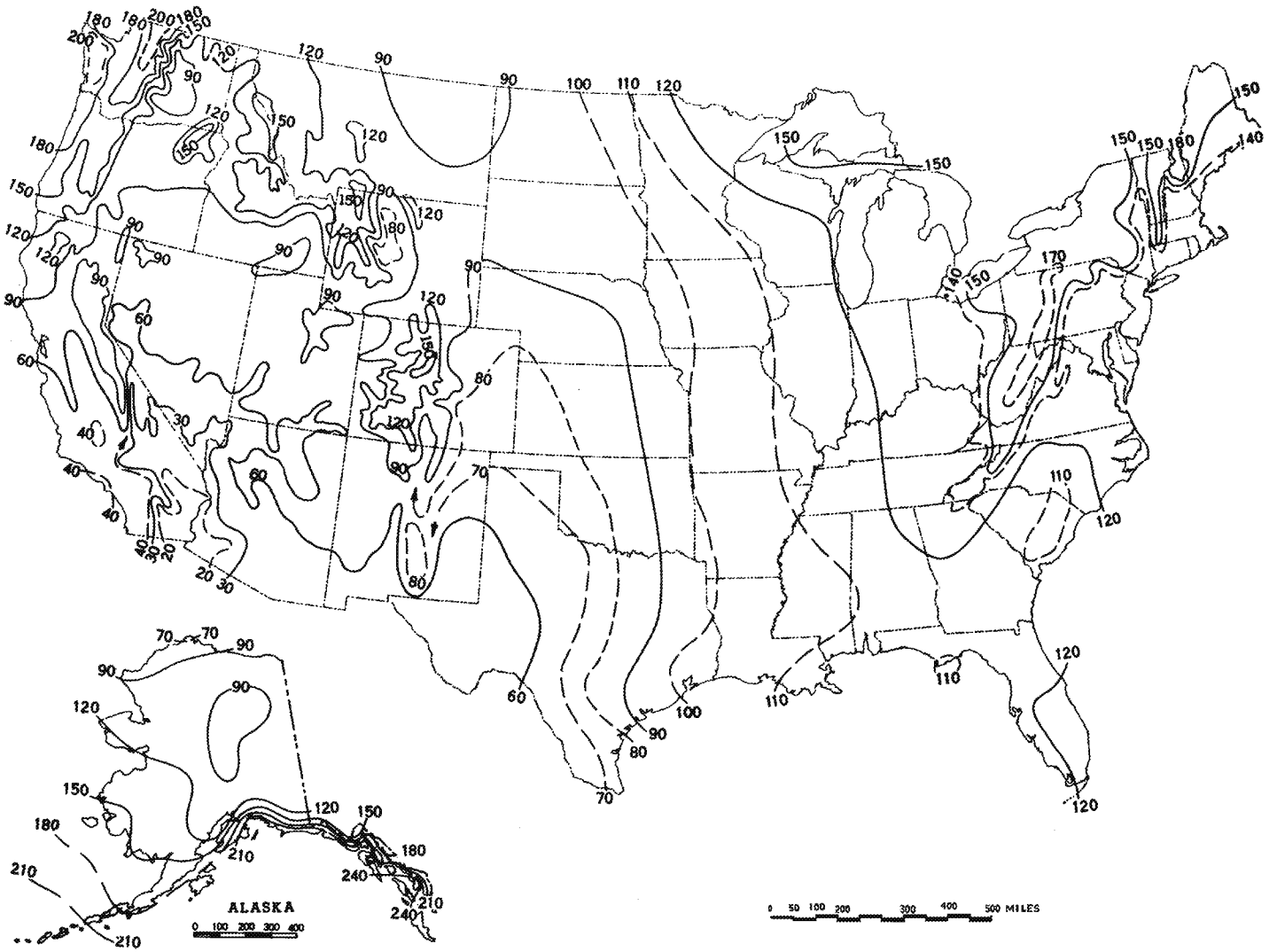

Figure 13.2.2-1. Mean number of days with 0.01 inch or more of precipitation in United States.

and outer diameter greater than or equal to 2.375 inch.

Tubing systems means piping equal to or less than one half inch diameter as per nominal pipe size.

Turbine meter means a flow meter in which a gas or liquid flow rate through the calibrated tube spins a turbine from which the spin rate is detected and calibrated to measure the fluid flow rate.

Vented emissions means intentional or designed releases of CH_4 or CO_2 containing natural gas or hydrocarbon gas (not including stationary combustion flue gas), including process designed flow to the atmosphere through seals or vent pipes, equipment blowdown for maintenance, and direct venting of gas used to power equipment (such as pneumatic devices).

Vertical well means a well bore that is primarily vertical but has some unintentional deviation or one or more intentional deviations to enter one or more subsurface targets that are offset horizontally from the surface location, intercepting the targets either vertically or at an angle.

Well testing venting and flaring means venting and/or flaring of natural gas at the time the production rate of a well is determined for regulatory, commercial, or technical purposes. If well testing is conducted immediately after well completion or workover, then it is considered part of well completion or workover.

[75 FR 74488, Nov. 30, 2010, as amended at 76 FR 80590, Dec. 23, 2011]

TABLE W–1A OF SUBPART W—DEFAULT WHOLE GAS EMISSION FACTORS FOR ONSHORE PETROLEUM AND NATURAL GAS PRODUCTION

Onshore petroleum and natural gas production	Emission factor (scf/hour/component)
Eastern U.S.	
Population Emission Factors—All Components, Gas Service [1]	
Valve	0.640
Connector	0.083
Open-ended Line	1.46
Pressure Relief Valve	0.97
Low Continuous Bleed Pneumatic Device Vents [2]	1.39
High Continuous Bleed Pneumatic Device Vents [2]	37.3
Intermittent Bleed Pneumatic Device Vents [2]	13.5
Pneumatic Pumps [3]	10.3
Population Emission Factors—All Components, Light Crude Service [4]	
Valve	0.04
Flange	0.002
Connector	0.005
Open-ended Line	0.04
Pump	0.01
Other [5]	0.23
Population Emission Factors—All Components, Heavy Crude Service [6]	
Valve	0.0004
Flange	0.0007
Connector (other)	0.0002
Open-ended Line	0.004
Other [5]	0.002
Western U.S.	
Population Emission Factors—All Components, Gas Service [1]	
Valve	2.903
Connector	0.396
Open-ended Line	0.748
Pressure Relief Valve	4.631
Low Continuous Bleed Pneumatic Device Vents [2]	1.77
High Continuous Bleed Pneumatic Device Vents [2]	47.4
Intermittent Bleed Pneumatic Device Vents [2]	17.1
Pneumatic Pumps [3]	10.3

ED_004016Q_00002229-00171

Onshore petroleum and natural gas production	Emission factor (scf/hour/component)
Population Emission Factors—All Components, Light Crude Service[4]	
Valve	0.04
Flange	0.002
Connector	0.005
Open-ended Line	0.04
Pump	0.01
Other[5]	0.23
Population Emission Factors—All Components, Heavy Crude Service[6]	
Valve	0.0004
Flange	0.0007
Connector (other)	0.0002
Open-ended Line	0.004
Other[5]	0.002

[1] For multi-phase flow that includes gas, use the gas service emissions factors.
[2] Emission Factor is in units of "scf/hour/device."
[3] Emission Factor is in units of "scf/hour/pump."
[4] Hydrocarbon liquids greater than or equal to 20°API are considered "light crude."
[5] "Others" category includes instruments, loading arms, pressure relief valves, stuffing boxes, compressor seals, dump lever arms, and vents.
[6] Hydrocarbon liquids less than 20°API are considered "heavy crude."

[76 FR 80591, Dec. 23, 2011]

Table W–1B to Subpart W of Part 98—Default Average Component Counts for Major Onshore Natural Gas Production Equipment

Major equipment	Valves	Connectors	Open-ended lines	Pressure relief valves
Eastern U.S.				
Wellheads	8	38	0.5	0
Separators	1	6	0	0
Meters/piping	12	45	0	0
Compressors	12	57	0	0
In-line heaters	14	65	2	1
Dehydrators	24	90	2	2
Western U.S.				
Wellheads	11	36	1	0
Separators	34	106	6	2
Meters/piping	14	51	1	1
Compressors	73	179	3	4
In-line heaters	14	65	2	1
Dehydrators	24	90	2	2

Table W–1C to Subpart W of Part 98—Default Average Component Counts For Major Crude Oil Production Equipment

Major equipment	Valves	Flanges	Connectors	Open-ended lines	Other components
Eastern U.S.					
Wellhead	5	10	4	0	1
Separator	6	12	10	0	0
Heater-treater	8	12	20	0	0
Header	5	10	4	0	0
Western U.S.					
Wellhead	5	10	4	0	1
Separator	6	12	10	0	0
Heater-treater	8	12	20	0	0
Header	5	10	4	0	0

ED_004016Q_00002229-00172

TABLE W–1D OF SUBPART W OF PART 98—DESIGNATION OF EASTERN AND WESTERN U.S.

Eastern U.S.	Western U.S.
Connecticut	Alabama
Delaware	Alaska
Florida	Arizona
Georgia	Arkansas
Illinois	California
Indiana	Colorado
Kentucky	Hawaii
Maine	Idaho
Maryland	Iowa
Massachusetts	Kansas
Michigan	Louisiana
New Hampshire	Minnesota
New Jersey	Mississippi
New York	Missouri

TABLE W–1D OF SUBPART W OF PART 98—DESIGNATION OF EASTERN AND WESTERN U.S.—Continued

Eastern U.S.	Western U.S.
North Carolina	Montana
Ohio	Nebraska
Pennsylvania	Nevada
Rhode Island	New Mexico
South Carolina	North Dakota
Tennessee	Oklahoma
Vermont	Oregon
Virginia	South Dakota
West Virginia	Texas
Wisconsin	Utah
	Washington
	Wyoming

TABLE W–2 OF SUBPART W—DEFAULT TOTAL HYDROCARBON EMISSION FACTORS FOR ONSHORE NATURAL GAS PROCESSING

Onshore natural gas processing plants	Emission factor (scf/hour/component)
Leaker Emission Factors—Compressor Components, Gas Service	
Valve [1]	14.84
Connector	5.59
Open-Ended Line	17.27
Pressure Relief Valve	39.66
Meter	19.33
Leaker Emission Factors—Non-Compressor Components, Gas Service	
Valve [1]	6.42
Connector	5.71
Open-Ended Line	11.27
Pressure Relief Valve	2.01
Meter	2.93

[1] Valves include control valves, block valves and regulator valves.

[76 FR 80592, Dec. 23, 2011]

TABLE W–3 OF SUBPART W—DEFAULT TOTAL HYDROCARBON EMISSION FACTORS FOR ONSHORE NATURAL GAS TRANSMISSION COMPRESSION

Onshore natural gas transmission compression	Emission factor (scf/hour/component)
Leaker Emission Factors—Compressor Components, Gas Service	
Valve [1]	14.84
Connector	5.59
Open-Ended Line	17.27
Pressure Relief Valve	39.66
Meter	19.33
Leaker Emission Factors—Non-Compressor Components, Gas Service	
Valve [1]	6.42
Connector	5.71
Open-Ended Line	11.27
Pressure Relief Valve	2.01
Meter	2.93
Population Emission Factors—Gas Service	
Low Continuous Bleed Pneumatic Device Vents [2]	1.37
High Continuous Bleed Pneumatic Device Vents [2]	18.20

ED_004016Q_00002229-00173

New Mexico
ENVIRONMENT DEPARTMENT

505 Camino de los Marquez, Suite 1
Santa Fe, NM 87505
Phone (505) 476-4300
Fax (505) 476-4375
www.nmenv.state.nm.us

SUSANA MARTINEZ
GOVERNOR

JOHN A. SANCHEZ
LIEUTENANT GOVERNOR

RYAN FLYNN
CABINET SECRETARY

BUTCH TONGATE
DEPUTY SECRETARY

DEPARTMENT ACCEPTED VALUES FOR: AGGREGATE HANDLING, STORAGE PILE, and HAUL ROAD EMISSIONS

TO: Applicants and Air Quality Permitting Staff

THROUGH: Ted Schooley, Permit Section Chief, Air Quality Bureau

FROM: Liz Bisbey-Kuehn, Minor Source Section, Air Quality Bureau

SUBJECT: Department accepted default values for percent silt, wind speed, moisture content, and control efficiencies for haul road control measures

This guidance document provides the Department accepted default values for correction parameters in the emission calculation equations for aggregate handling and storage piles emissions, and submitted under Parts 72 and 73; and the Department accepted control efficiencies for haul road control measures for applications submitted under Part 72.

Aggregate Handling and Storage Pile Emission Calculations

Applicants should calculate the particulate matter emissions from aggregate handling and storage piles using the EPA's AP-42 Chapter 13.2.4.
http://www3.epa.gov/ttn/chief/ap42/ch13/final/c13s0204.pdf

Equation 1 from Chapter 13.2.4 requires users to input values for two correction parameters, U and M, where U = mean wind speed and M = material moisture content. Below are the accepted values for U and M:

Default Values for Chapter 13.2.4, Equation 1:

Parameter	Default Value
U = Mean wind speed (miles per hour)	11 mph
M = Material moisture content (% water)	2%

Applicants must receive preapproval from the Department if they wish to assume a higher moisture content in these calculations. Applicants may assume higher wind speeds and lower percent moisture content in their calculations without prior approval from the Department.

Haul Road Emissions and Control Measure Efficiencies

Applicants should calculate the particulate matter emissions from unpaved haul roads using the EPA's AP-42 Chapter 13.2.2. http://www3.epa.gov/ttn/chief/ap42/ch13/final/c13s0202.pdf

Equation 1(a) from Chapter 13.2.2 requires users to input values for two correction parameters, s and W, where s = surface material silt content (%) and W = mean vehicle weight (tons). The applicant should calculate the mean vehicle weight in accordance with the chapter's instructions. Below is the accepted value for the parameter s:

Default Values for Chapter 13.2.2, Equation 1(a):

Parameter	Default Value
s = surface material silt content (%)	4.8%

Applicants may use a higher silt content without prior approval from the Department. Use of a lower silt content requires prior approval from the Department and may require site specific testing in support of the request.

Equation 2 from Chapter 13.2.2 allows users to take credit for the number of days that receive precipitation in excess of 0.01 inches, in the annual emissions calculation, where P = number of days in a year with at least 0.01 inches of precipitation.

Default Values for Chapter 13.2.2, Equation 2:

Parameter	Default Value
P = number of days in a year with at least 0.01 inches of precipitation	70 days

Applications submitted under Part 72 may request to apply control measures to reduce the particulate matter emissions from facility haul roads. Applications submitted under Part 73 may not consider any emission reduction from control measures in the potential emission rate calculation, as registrations issued under Part 73 are not federally enforceable under the Clean Air Act or the New Mexico Air Quality Control Act. In order for those control measures to be federally enforceable, the controls must be a requirement in an air quality permit.

Below are the Department accepted control efficiencies for various haul road control measures:

Haul Road Control Measures and Control Efficiency:

Control Measure	Control Efficiency
None	0%
Base course or watering	60%
Base course and watering	80%
Base course and surfactant	90%
Paved and Swept	95%

Gas Analysis

2030 Afton Place
Farmington, NM 87401
(505) 325-6622

Analysis No: WP130059
Cust No: 85500-10925

Well/Lease Information

Customer Name:	WPX ENERGY PRODUCTION, LLC	Source:	N/A
Well Name:	CHACO 2408-32 P #114 H	Pressure:	154 PSIG
County/State:	NM	Sample Temp:	DEG. F
Location:		Well Flowing:	
Field:		Date Sampled:	05/02/2013
Formation:		Sampled By:	ART. L. ALSAP
Cust. Stn. No.:	9024	Foreman/Engr.:	

Remarks: OPERATOR COD 9024
RUN# 04-50

Analysis

Component::	Mole%:	**GPM:	*BTU:	*SP Gravity:
Nitrogen	16.090	1.7760	0.00	0.1556
CO2	0.358	0.0610	0.00	0.0054
Methane	61.351	10.4360	619.65	0.3398
Ethane	10.066	2.7010	178.14	0.1045
Propane	7.243	2.0020	182.24	0.1103
Iso-Butane	0.849	0.2790	27.61	0.0170
N-Butane	2.316	0.7330	75.55	0.0465
I-Pentane	0.487	0.1790	19.48	0.0121
N-Pentane	0.464	0.1690	18.60	0.0116
Hexane Plus	0.776	0.3470	40.90	0.0257
Total	100.000	18.6830	1162.18	0.8286

* @ 14.730 PSIA DRY & UNCORRECTED FOR COMPRESSIBILITY

**@ 14.730 PSIA & 60 DEG. F.

COMPRESSIBLITY FACTOR (1/Z): 1.0036

BTU/CU.FT (DRY) CORRECTED FOR (1/Z): 1169.1

BTU/CU.FT (WET) CORRECTED FOR (1/Z): 1148.8

REAL SPECIFIC GRAVITY: 0.8312

GPM, BTU, and SPG calculations as shown above are based on current GPA factors.

DRY BTU @ 14.650:	1162.8	CYLINDER #:	CC#6
DRY BTU @ 14.696:	1166.4	CYLINDER PRESSURE:	140 PSIG
DRY BTU @ 14.730:	1169.1	DATE RUN:	5/6/13 2:33 PM
DRY BTU @ 15.025:	1192.5	ANALYSIS RUN BY:	LOGAN CHENEY

WPX ENERGY PRODUCTION, LLC

WELL ANALYSIS COMPARISON

Lease: CHACO 2408-32 P #114 H N/A 05/06/2013

Stn. No.: 9024 85500-10925

Mtr. No.:

Smpl Date:	05/02/2013	04/29/2013	04/25/2013	04/16/2013	04/15/2013	04/05/2013	04/04/2013
Test Date:	05/06/2013	05/01/2013	04/26/2013	04/17/2013	04/16/2013	04/05/2013	04/04/2013
Run No:	WP130059	WP130056	WP130055	WP130038	WP130037	WP130031	WP130028
Nitrogen:	16.090	16.467	17.421	20.446	21.046	28.972	29.526
CO2:	0.358	0.356	0.350	0.360	0.327	0.305	0.294
Methane:	61.351	60.626	59.267	57.571	57.463	52.068	54.355
Ethane:	10.066	10.053	9.790	9.512	9.295	8.614	8.060
Propane:	7.243	7.385	7.493	7.086	7.014	6.352	5.235
I-Butane:	0.849	0.860	0.917	0.833	0.842	0.708	0.522
N-Butane:	2.316	2.342	2.523	2.258	2.273	1.828	1.308
I-Pentane:	0.487	0.571	0.630	0.542	0.536	0.383	0.244
N-Pentane:	0.464	0.572	0.636	0.537	0.526	0.357	0.223
Hexane+:	0.776	0.768	0.973	0.855	0.678	0.413	0.233
BTU:	1169.1	1173.6	1181.6	1123.5	1107.4	596.4	918.3
GPM:	18.6830	18.7150	18.7590	18.3820	18.2660	10.6370	17.0030
SPG:	0.8312	0.8381	0.8534	0.8485	0.8440	0.8435	0.8122

04/04/2013	04/01/2013	03/29/2013	03/27/2013	03/26/2013	03/25/2013	03/25/2013
04/04/2013	04/02/2013	04/02/2013	03/28/2013	03/27/2013	03/25/2013	03/25/2013
WP130027	WP130025	WP130024	WP130023	WP130022	WP130021	WP130020
30.332	28.878	32.582	29.843	34.384	35.063	36.608
0.299	0.305	0.286	0.302	0.274	0.273	0.281
51.790	52.329	48.913	46.748	47.027	46.184	45.137
8.558	8.640	8.383	9.823	8.193	8.144	7.921
6.010	6.332	6.322	8.579	6.413	6.464	6.265
0.624	0.693	0.700	0.976	0.726	0.745	0.724
1.551	1.757	1.774	2.427	1.863	1.923	1.877
0.297	0.356	0.356	0.457	0.382	0.399	0.395
0.270	0.327	0.326	0.409	0.352	0.370	0.367
0.269	0.383	0.358	0.436	0.386	0.435	0.425
938.0	973.0	932.8	1036.0	920.0	918.4	895.7
17.1710	17.3980	17.1460	17.8970	17.0650	17.0560	16.9050
0.8336	0.8407	0.8541	0.8915	0.8648	0.8711	0.8731

WPX ENERGY PRODUCTION, LLC

WELL ANALYSIS COMPARISON

Lease: CHACO 2408-32 P #114 H N/A 05/06/2013

Stn. No.: 9024 85500-10925

Mtr. No.:

03/18/2013	03/17/2013	03/17/2013	03/15/2013	03/14/2013
03/19/2013	03/18/2013	03/18/2013	03/18/2013	03/15/2013
WP130019	WP130018	WP130017	WP130016	WP130015
47.018	47.341	48.189	56.124	57.418
0.226	0.226	0.222	0.174	0.149
38.719	36.684	36.041	32.160	30.712
6.347	6.294	6.219	5.195	5.000
4.791	5.283	5.255	3.942	3.850
0.547	0.678	0.673	0.449	0.459
1.422	1.890	1.864	1.172	1.235
0.299	0.467	0.458	0.251	0.293
0.273	0.457	0.449	0.235	0.290
0.358	0.680	0.630	0.298	0.594
733.0	774.8	761.9	606.2	607.8
15.8140	16.0920	16.0080	14.9760	14.9820
0.8784	0.9089	0.9096	0.8930	0.9075

Produced Water Analysis

HOUSTON LABORATORIES
8820 INTERCHANGE DRIVE
HOUSTON, TEXAS 77054
PHONE (713) 660-0901

Certificate of Analysis Number: 2013040639-001A

FOR: WPX Energy
Michael Lane
721 S. Main
Aztec, NM 87410

CUSTOMER: WPX Energy
LOCATION : Chaco 2408-32P #114H
SAMPLE POINT: Separator Water Dump
REPORT DATE: 5/7/2013
SAMPLE DATE: 04/16/2013 16:00
SAMPLED BY:
MEMO: Flash gas composition from pressurized water sample.

TYPE: SpotLiquid
REPORT: GPA 2286M
CYLINDER: 37698
PRESSURE:
TEMPERATURE: 90

COMPONENT	MOL %	WEIGHT %	GPM's
HELIUM	NIL	NIL	
HYDROGEN	NIL	NIL	
OXYGEN/ARGON	2.390	3.198	
NITROGEN	23.026	26.967	
METHANE	54.356	36.457	
CARBON DIOXIDE	4.518	8.312	
ETHANE	9.532	11.983	2.535
PROPANE	4.402	8.115	1.651
I-BUTANE	0.316	0.769	0.087
N-BUTANE	0.909	2.208	0.230
I-PENTANE	0.150	0.452	0.049
N-PENTANE	0.121	0.364	0.038
I-HEXANES	0.038	0.125	0.014
N-HEXANE	0.012	0.044	0.005
BENZENE	0.025	0.080	0.007
CYCLOHEXANE	0.022	0.076	0.007
I-HEPTANES	0.037	0.143	0.015
N-HEPTANE	0.006	0.026	0.003
TOLUENE	0.019	0.090	0.008
I-OCTANES	0.034	0.141	0.014
N-OCTANE	0.006	0.028	0.003
*E-BENZENE	0.002	0.008	0.001
*m,o,&p-XYLENE	0.015	0.064	0.006
I-NONANES	0.014	0.075	0.007
N-NONANE	0.006	0.034	0.004
I-DECANES	0.027	0.140	0.013
N-DECANE	0.005	0.026	0.003
I-UNDECANES +	0.012	0.075	0.007
TOTALS	100.000	100.000	4.706

CALCULATED VALUES	TOTAL	C10+
Molecular Weight	23.918	138.890
Relative Density as a Vapor	0.8274	4.807
Compressibility Factor	0.9975	N/A
HvID/Z (Btu/Ft.3), Dry Basis at 14.65 Psia, 60°F	893.5	7334.7 *
HvID/Z (Btu/Ft.3), Saturated at Base at 14.65 Psia, 60°F	877.9	7183.8 *

* Plus Fractions values are Ideal

HOUSTON LABORATORIES
8820 INTERCHANGE DRIVE
HOUSTON, TEXAS 77054
PHONE (713) 660-0901

Certificate of Analysis Number: 2013040639-001A

FOR: WPX Energy
Michael Lane
721 S. Main
Aztec, NM 87410

CUSTOMER: WPX Energy
LOCATION : Chaco 2408-32P #114H
SAMPLE POINT: Separator Water Dump
REPORT DATE: 5/7/2013
SAMPLE DATE: 04/16/2013 16:00
SAMPLED BY:
MEMO: Flash gas composition from pressurized water sample.

TYPE: SpotLiquid
REPORT: GPA 2286M
CYLINDER: 37698
PRESSURE:
TEMPERATURE: 90

COMPONENT	MOL %	WEIGHT %	GPM's
HELIUM	NIL	NIL	
HYDROGEN	NIL	NIL	
OXYGEN/ARGON	2.390	3.198	
NITROGEN	23.026	26.967	
METHANE	54.356	36.457	
CARBON DIOXIDE	4.518	8.312	
ETHANE	9.532	11.983	2.535
PROPANE	4.402	8.115	1.651
I-BUTANE	0.316	0.769	0.087
N-BUTANE	0.909	2.208	0.230
I-PENTANE	0.150	0.452	0.049
N-PENTANE	0.121	0.364	0.038
HEXANES PLUS	0.280	1.175	0.117
TOTALS	100.000	100.000	4.706

CALCULATED VALUES	TOTAL	C6+
Molecular Weight	23.918	100.301
Relative Density as a Vapor	0.8274	3.477
Compressibility Factor	0.9975	N/A
HvID/Z (Btu/Ft.3), Dry Basis at 14.65 Psia, 60°F	893.5	5296.5 *
HvID/Z (Btu/Ft.3), Saturated at Base at 14.65 Psia, 60°F	877.9	5187.5 *

* Plus Fractions values are Ideal

Hydrocarbon Laboratory Manager

HOUSTON LABORATORIES
6920 INTERCHANGE DRIVE
HOUSTON, TEXAS 77054
PHONE (713) 660-0901

Certificate of Analysis Number: 2013040639-001A

FOR: WPX Energy
Michael Lane
721 S. Main
Aztec, NM 87410

CUSTOMER: WPX Energy
LOCATION : Chaco 2408-32P #114H
SAMPLE POINT: Separator Water Dump
REPORT DATE: 5/7/2013
SAMPLE DATE: 04/16/2013 16:00
SAMPLED BY:
MEMO: Flash gas composition from pressurized water sample.

TYPE: SpotLiquid
REPORT: GPA 2286M
CYLINDER: 37698
PRESSURE:
TEMPERATURE: 90

COMPONENT	MOL %	WEIGHT %	GPM's
HELIUM	NIL	NIL	
HYDROGEN	NIL	NIL	
OXYGEN/ARGON	2.390	3.198	
NITROGEN	23.026	26.967	
METHANE	54.356	36.457	
CARBON DIOXIDE	4.518	8.312	
ETHANE	9.532	11.983	2.535
PROPANE	4.402	8.115	1.651
I-BUTANE	0.316	0.769	0.087
N-BUTANE	0.909	2.208	0.230
I-PENTANE	0.150	0.452	0.049
N-PENTANE	0.121	0.364	0.038
HEXANES	0.050	0.169	0.019
HEPTANES PLUS	0.230	1.006	0.098
TOTALS	100.000	100.000	4.706

CALCULATED VALUES	TOTAL	C7+
Molecular Weight	23.918	103.97
Relative Density as a Vapor	0.8274	3.610
Compressibility Factor	0.9975	N/A
HvID/Z (Btu/Ft.3), Dry Basis at 14.65 Psia, 60°F	893.5	5459.0 *
HvID/Z (Btu/Ft.3), Saturated at Base at 14.65 Psia, 60°F	877.9	5346.7 *

* Plus Fractions values are Ideal

Hydrocarbon Laboratory Manager

HOUSTON LABORATORIES
8820 INTERCHANGE DRIVE
HOUSTON, TEXAS 77054
PHONE (713) 660-0901

Certificate of Analysis Number: 2013040639-001A

FOR: WPX Energy
Michael Lane
721 S. Main
Aztec, NM 87410

CUSTOMER: WPX Energy
LOCATION : Chaco 2408-32P #114H
SAMPLE POINT: Separator Water Dump
REPORT DATE: 5/3/2013
SAMPLE DATE: 04/16/2013 16:00
SAMPLED BY:
MEMO: Pressurized water sample physically flashed and composition calculated on an air free basis.

TYPE: SpotLiquid
REPORT: C10+ (GPA Method 2286)
CYLINDER: 37698
PRESSURE: 140
TEMPERATURE: 90

COMPONENT	MOL %	WEIGHT %	GPM's
HELIUM	NIL	NIL	
HYDROGEN	NIL	NIL	
OXYGEN/ARGON	NIL	NIL	
NITROGEN	14.489	17.487	
METHANE	62.315	43.070	
CARBON DIOXIDE	5.179	9.819	
ETHANE	10.931	14.161	2.907
PROPANE	5.048	9.590	1.383
I-BUTANE	0.365	0.913	0.119
N-BUTANE	1.041	2.607	0.326
I-PENTANE	0.171	0.530	0.062
N-PENTANE	0.139	0.431	0.050
I-HEXANES	0.042	0.149	0.016
N-HEXANE	0.014	0.052	0.006
BENZENE	0.028	0.094	0.008
CYCLOHEXANE	0.025	0.090	0.008
I-HEPTANES	0.042	0.169	0.017
N-HEPTANE	0.007	0.031	0.003
TOLUENE	0.037	0.114	0.010
I-OCTANES	0.037	0.168	0.016
N-OCTANE	0.007	0.033	0.003
*E-BENZENE	0.002	0.010	0.001
*m,o,&p-XYLENE	0.015	0.074	0.006
I-NONANES	0.014	0.087	0.009
N-NONANE	0.007	0.041	0.004
I-DECANES	0.027	0.161	0.015
N-DECANE	0.005	0.031	0.003
I-UNDECANES +	0.013	0.088	0.009
TOTALS	100.000	100.000	4.980

CALCULATED VALUES	TOTAL	C10+
Molecular Weight	23.211	139.152
Relative Density as a Vapor	0.8063	4.7250
Compressibility Factor	0.9934	N/A
HvID/Z (Btu/Ft.^{3}), Dry Basis at 14.65 Psia, 60°F	1028.7	7345 *
HvID/Z (Btu/Ft.^{3}), Saturated at Base at 14.65 Psia, 60°F	1011.6	7194 *

* Plus Fraction HvID (Btu, Ft.^{3})

HOUSTON LABORATORIES
8820 INTERCHANGE DRIVE
HOUSTON, TEXAS 77054
PHONE (713) 660-0901

Certificate of Analysis Number: 2013040639-001A

FOR: WPX Energy
Michael Lane
721 S. Main
Aztec, NM 87410

CUSTOMER: WPX Energy
LOCATION : Chaco 2408-32P #114H
SAMPLE POINT: Separator Water Dump
REPORT DATE: 5/3/2013
SAMPLE DATE: 04/16/2013 16:00
SAMPLED BY:
MEMO: Pressurized water sample physically flashed and composition calculated on an air free basis.

TYPE: SpotLiquid
REPORT: C10+ (GPA Method 2186)
CYLINDER: 37698
PRESSURE: 140
TEMPERATURE: 90

COMPONENT	MOL %	WEIGHT %	GPM's
HELIUM	NIL	NIL	
HYDROGEN	NIL	NIL	
OXYGEN/ARGON	NIL	NIL	
NITROGEN	14.489	17.487	
METHANE	62.315	43.070	
CARBON DIOXIDE	5.179	9.819	
ETHANE	10.931	14.161	2.907
PROPANE	5.048	9.590	1.383
I-BUTANE	0.366	0.913	0.119
N-BUTANE	1.041	2.607	0.326
I-PENTANE	0.171	0.530	0.062
N-PENTANE	0.139	0.431	0.050
HEXANES PLUS	0.322	1.392	0.134
TOTALS	100.000	100.000	4.980

CALCULATED VALUES	TOTAL	C6+
Molecular Weight	23.211	100.402
Relative Density as a Vapor	0.8063	3.4762
Compressibility Factor	0.9934	N/A
HvID/Z (Btu/Ft.^{3}), Dry Basis at 14.65 Psia, 60°F	1028.7	5296 *
HvID/Z (Btu/Ft.^{3}), Saturated at Base at 14.65 Psia, 60°F	1011.6	5187 *

* Plus Fraction HvID (Btu, Ft.^{3})

Hydrocarbon Laboratory Manager

HOUSTON LABORATORIES
6620 INTERCHANGE DRIVE
HOUSTON, TEXAS 77054
PHONE (713) 660-0901

Certificate of Analysis Number: 2013040639-001A

FOR: WPX Energy
Michael Lane
721 S. Main
Aztec, NM 87410

CUSTOMER: WPX Energy
LOCATION : Chaco 2408-32P #114H
SAMPLE POINT: Separator Water Dump
REPORT DATE: 5/3/2013
SAMPLE DATE: 04/16/2013 16:00
SAMPLED BY:
MEMO: Pressurized water sample physically flashed and composition calculated on an air free basis.

TYPE: SpotLiquid
REPORT: C10+ (GPA Method 2186)
CYLINDER: 37698
PRESSURE: 140
TEMPERATURE: 90

COMPONENT	MOL %	WEIGHT %	LV %
HELIUM	NIL	NIL	
HYDROGEN	NIL	NIL	
OXYGEN/ARGON	NIL	NIL	
NITROGEN	14.489	17.487	
METHANE	62.315	43.070	
CARBON DIOXIDE	5.179	9.819	
ETHANE	10.931	14.161	2.907
PROPANE	5.048	9.590	1.383
I-BUTANE	0.365	0.913	0.119
N-BUTANE	1.041	2.607	0.326
I-PENTANE	0.171	0.530	0.062
N-PENTANE	0.139	0.431	0.050
HEXANES	0.056	0.201	0.022
HEPTANES PLUS	0.266	1.191	0.112
TOTALS	100.000	100.000	4.980

CALCULATED VALUES	TOTAL	C7+
Molecular Weight	23.211	104.074
Relative Density as a Vapor	0.8063	3.6089
Compressibility Factor	0.9934	N/A
HvID/Z (Btu/Ft.^{3}), Dry Basis at 14.65 Psia, 60°F	1028.7	5458 *
HvID/Z (Btu/Ft.^{3}), Saturated at Base at 14.65 Psia, 60°F	1011.6	5346 *

* Plus Fraction HvID (Btu, Ft.^{3})

Hydrocarbon Laboratory Manager

HOUSTON LABORATORIES
8620 INTERCHANGE DRIVE
HOUSTON, TEXAS 77054
PHONE (713) 660-0901

CERTIFICATE OF ANALYSIS

Certificate of Analysis Number: **2013040639-001A**

FOR:
Michael Lane
WPX Energy
721 S. Main

Aztec, NM 87410

CUSTOMER:	Michael Lane	**TYPE:**	SpotLiquid
FIELD :	Aztec, NM.	**REPORT:**	Flash Report
LOCATION :	Chaco 2408-32P #114H	**CYLINDER:**	37698
SAMPLE POINT:	Separator Water Dump	**PRESSURE:**	140
REPORT DATE:	5/3/2013	**TEMPERATURE:**	90
SAMPLE DATE:	04/16/2013 16:00		
SAMPLED BY:			

Comments: Pressurized water sample physically flashed and composition calculated.

Analytical Data

Parameters	Results	Units	Lab Tech.	Date Analyzed
Flash Factor	25.02	Ft^3 / bbl	GM / CS	5/3/2013
Flash Factor (Air Free)	22.81	Ft^3 / bbl	GM / CS	5/3/2013

Hydrocarbon Laboratory Manager

Oil Analysis

LAFAYETTE AREA LABORATORY
4790 N.E. EVANGELINE THRUWAY
CARENCRO, LA 70520
PHONE (337) 896-3055
FAX (337) 896-3077

Certificate of Analysis : 13090068-002A

Company:	WPX Energy	**For:**	WPX Energy
Well:	Chaco 147H		Michael Lane
Field:	Aztec, NM		721 S. Main
Sample of:	Liquid-Spot		
Conditions:	70 psi @ N.G.° F		Aztec, NM, 87410
Sampled by:	ML-WPX		
Sample date:	8/29/2013	**Report Date:**	9/19/2013
Remarks:	Cylinder No.: 4925		
Remarks:			

Analysis: (*GPA 2186M*)	**Mol. %**	**MW**	**Wt. %**	**Sp. Gravity**	**L.V. %**
Nitrogen	0.000	28.013	0.000	0.8094	0.000
Methane	1.046	16.043	0.096	0.3000	0.260
Carbon Dioxide	0.000	44.010	0.000	0.8180	0.000
Ethane	1.178	30.070	0.203	0.3562	0.462
Propane	4.473	44.097	1.132	0.5070	1.807
Iso-butane	1.398	58.123	0.466	0.5629	0.671
N-butane	5.587	58.123	1.864	0.5840	2.584
Iso-pentane	3.189	72.150	1.320	0.6244	1.712
N-pentane	3.956	72.150	1.638	0.6311	2.102
i-Hexanes	2.366	86.177	1.144	0.6795	1.391
n-Hexane	2.094	85.152	1.035	0.6640	1.252
2,2,4 trimethylpentane	0.055	114.231	0.036	0.6967	0.043
Benzene	0.283	78.114	0.283	0.8846	0.117
Heptanes	8.906	94.041	4.670	0.7260	5.405
Toluene	0.828	92.141	0.973	0.8719	0.409
Octanes	9.186	106.465	5.145	0.7531	6.171
E-benzene	0.266	106.167	0.070	0.8718	0.151
M-,O-,P-xylene	1.172	106.167	0.714	0.8731	0.668
Nonanes	5.418	122.034	4.017	0.7668	4.252
Decanes Plus	48.599	269.612	75.194	0.8633	70.543
	100.000		100.000		100.000

Calculated Values	**Total Sample**	**Decanes Plus**
Specific Gravity at 60 °F	0.8099	0.8633
Api Gravity at 60 °F	43.208	32.400
Molecular Weight	174.257	269.612
Pounds per Gallon (in Vacuum)	6.753	7.198
Pounds per Gallon (in Air)	6.745	7.190
Cu. Ft. Vapor per Gallon @ 15.025 psia	15.035	9.909

Brian Hazard

Southern Petroleum Laboratories, Inc.

LAFAYETTE AREA LABORATORY
4790 N.E. EVANGELINE THRUWAY
CARENCRO, LA 70520
PHONE (337) 896-3055
FAX (337) 896-3077

Certificate of Analysis : 13090068-002A

Company:	WPX Energy	**For:**	WPX Energy
Well:	Chaco 147H		Michael Lane
Field:	Aztec, NM		721 S. Main
Sample of:	Liquid-Spot		
Conditions:	70 psi @ N.G.° F		Aztec, NM, 87410
Sampled by:	ML-WPX		
Sample date:	8/29/2013	**Report Date:**	9/19/2013
Remarks:	Cylinder No.: 4925		
Remarks:			

Analysis: (*GPA 2103M*)	**Mol. %**	**MW**	**Wt. %**	**Sp. Gravity**	**L.V. %**
Nitrogen	0.000	28.013	0.000	0.8094	0.000
Methane	1.046	16.043	0.096	0.3000	0.260
Carbon Dioxide	0.000	44.010	0.000	0.8180	0.000
Ethane	1.178	30.070	0.203	0.3562	0.462
Propane	4.473	44.097	1.132	0.5070	1.807
Iso-butane	1.398	58.123	0.466	0.5629	0.671
N-butane	5.587	58.123	1.864	0.5840	2.584
Iso-pentane	3.189	72.150	1.320	0.6244	1.712
N-pentane	3.956	72.150	1.638	0.6311	2.102
Hexanes	4.460	85.152	2.179	0.6679	2.643
Heptanes Plus	74.713	94.041	91.102	0.7260	87.759
	100.000		100.000		100.000

Calculated Values	**Total Sample**	**Heptanes Plus**
Specific Gravity at 60 °F	0.8099	0.8433
Api Gravity at 60 °F	43.208	36.289
Molecular Weight	174.257	212.480
Pounds per Gallon (in Vacuum)	6.753	7.031
Pounds per Gallon (in Air)	6.745	7.024
Cu. Ft. Vapor per Gallon @ 15.025 psia	15.035	12.839
Standing-Katz Density (lb. / ft^3)		

Brian Lassard

Southern Petroleum Laboratories, Inc.

Certificate of Analysis

Number: 2030-13090068-002A

Carencro Laboratory
4790 NE Evangeline Thruway
Carencro, LA 70520

Michael Lane
WPX Energy
721 S. Main
Aztec, NM 87410

Sep. 19, 2013

Field: Aztec, NM
Station Name: Chaco 147H
Sample Point: Low Press Separator
Cylinder No: 4925

Sampled By: ML-WPX
Sample Of: Liquid Spot
Sample Date: 08/29/2013 14:04
Sample Conditions: 70 psig
PO/Ref. No: Route Code: MM332295

Analytical Data

Test	Method	Result	Units	Detection Limit	Lab Tech.	Analysis Date
Color Visual	Proprietary	CRUDE			AR	09/12/2013
API Gravity @ 60° F	ASTM D-5002	41.45	°		AR	09/12/2013
Specific Gravity @ 60/60° F	ASTM D-5002	0.8181			AR	09/12/2013
Density @ 60° F	ASTM D-5002	0.8173	g/ml		AR	09/12/2013
Shrinkage Factor	Proprietary	0.9690			AR	09/12/2013
Flash Factor	Proprietary	18.2181	Cu. Ft./S.T. Bbl		AR	09/12/2013

Hydrocarbon Laboratory Manager

Quality Assurance: The above analyses are performed in accordance with ASTM, UOP, GPA guidelines for quality assurance, unless otherwise stated.

LAFAYETTE AREA LABORATORY
4790 N.E. EVANGELINE THRUWAY
CARENCRO, LA 70520
PHONE (337) 896-3055
FAX (337) 896-3077

CERTIFICATE OF ANALYSIS

Certificate of Analysis: 13090068-002A

Customer: WPX Energy
Attn: Michael K. Lane, PE
721 S. Main
Aztec, NM 87410

Report Date: 09/19/13
PO / Ref. No.:

Company: WPX Energy
Field: Chaco 147H
Station: L.P. Separator
Station No:
Sample Point:
Comments: EOS Flash Gas Composition

Sample Of: Flash Gas
Sample Date/Time: 08/29/13
Sample Psig & Temp: 70 psi @ 150 °F
Sampled By: ML-WPX
Cylinder # : 4925

	MOL %	WEIGHT %	GPM's @
NITROGEN			
CO2			
METHANE	36.091	16.546	
ETHANE	19.340	16.619	7.416
PROPANE	25.752	32.451	9.585
I-BUTANE	3.461	5.748	1.084
N-BUTANE	9.960	16.543	3.237
I-PENTANE	2.114	4.358	0.592
N-PENTANE	2.006	4.136	0.568
HEXANES	0.625	1.511	0.156
BENZENE	0.044	0.097	0.016
HEPTANES	0.372	1.027	0.083
TOLUENE	0.034	0.089	0.010
OCTANES	0.117	0.375	0.023
E-BENZENE	0.003	0.010	0.001
m,o,&p-XYLENE	0.011	0.035	0.003
NONANES	0.021	0.077	0.004
DECANES PLUS	0.049	0.378	0.008
TOTALS	100.000	100.000	22.786

CALCULATED VALUES

REAL DRY BTU AT 15.025 PSIA, 60 DEG.F	2047.4
REAL WET BTU AT 15.025 PSIA, 60 DEG.F	2012.4
RELATIVE DENSITY	1.2206
COMPRESSIBILITY FACTOR	0.98855

	C2+	C5+
GPM's @ 15.025 psia, 60 Deg.F	22.786	1.464

Section 7

Map(s)

A map such as a 7.5 minute topographic quadrangle showing the exact location of the source. The map shall also include the following:

The UTM or Longitudinal coordinate system on both axes	An indicator showing which direction is north
A minimum radius around the plant of 0.8km (0.5 miles)	Access and haul roads
Topographic features of the area	Facility property boundaries
The name of the map	The area which will be restricted to public access
A graphical scale	

In addition, please provide a satellite map using the most recent aerial photograph from Google Earth. Using the pin function, pin the existing facility or the location of the proposed facility. The pin should state the facility name.

A topographic map and aerial photo are provided on the following pages.

ED_004016Q_00002229-00193

WPX ENERGY PRODUCTION, LLC W ESCAVADA UNIT #307H

385' FNL & 2236' FWL, SECTION 19, T22N, R7W, N.M.P.M.
SANDOVAL COUNTY, NEW MEXICO

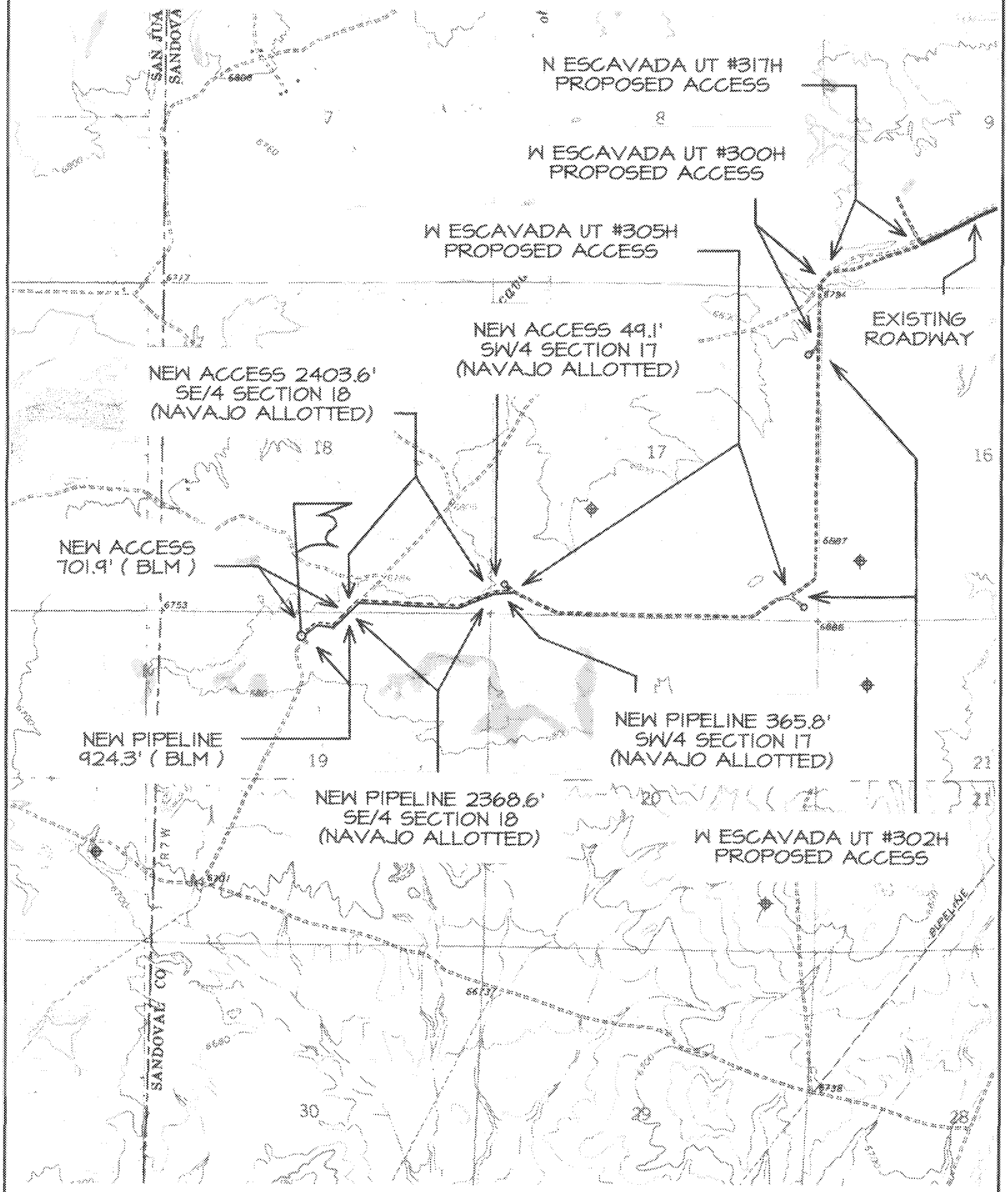

TOPO NAME : LYBROOK ⊕ PRODUCING WELL ⊗ PLUGGED & ABANDONED WELL

36.131373 -107.617158
W Escavada UT #307/308/309

Section 8

Applicable State & Federal Regulations

Provide a discussion demonstrating compliance with applicable state & federal regulation. All input cells should be filled in, even if the response is 'No' or 'N/A'.

In the "Justification" column, identify the criteria that are critical to the applicability determination, numbering each. For each unit listed in the "Applies to Unit No(s)" column, after each listed unit, include the lowest level citation of the applicable regulation. For each unit, list the information necessary to verify the applicability of the regulation, including date of manufacture, date of construction, size (hp), and combustion type. Doing so will provide the applicability criteria for each unit.

To save paper and to standardize the application format, delete this sentence, and begin your submittal for this attachment on this page.

Example of a Table for Applicable STATE REGULATIONS:

STATE REGU-LATIONS CITATION	Title	Applies to Entire Facility	Applies to Unit No(s).	Federally Enforce-able	Does Not Apply	JUSTIFICATION: Identify the applicability criteria, numbering each (i.e. 1. Post 7/23/84, 2. 75 m^3, 3. VOL)
20.2.38 NMAC	Hydrocarbon Storage Facil.		TK 1-15, PWTK 1-2	No		Hydrocarbon storage capacity of facility (new tank battery) exceeds 65,000 gallons. 20.2.38.112 applies. The rule requires the hydrocarbon liquid storage vessels must be equipped with: A floating roof, consisting of an external floating roof, internal floating cover or covered floating roof, which is equipped with a closure seal or seals; a well maintained vapor-recovery and disposal system as described in the rule; or any other device which is at least as effective to minimize vapor or gas loss to the atmosphere. The tanks will be manifolded to a vapor recovery unit (VRU) to meet the requirements of this regulation.
20.2.61.109 NMAC	Smoke & Visible Emissions		ENG 1-4, HT 1-5, GEN 1-12, FL 1-2	No		Engines, heaters, turbines, and flares are Stationary Combustion Equipment.
20.2.73 NMAC	NOI & Emissions Inventory Requirements	X		No		**NOI:** 20.2.73.200 NMAC applies (requiring a NOI application) **Emissions Inventory Reporting:** 20.2.73.300 NMAC applies. All Title V major sources meet the applicability requirements of 20.2.73.300 NMAC.
20.2.77 NMAC	New Source Performance		ENG 1-4, FUG-1	No		ENG 1-5 are engines subject to NSPS Subpart JJJJ. FUG-1 is subject to NSPS Subpart OOOOa.
20.2.78 NMAC	Emission Standards for HAPS				X	This facility DOES NOT emit hazardous air pollutants which are subject to the requirements of 40 CFR Part 61, as amended through December 31, 2010.
20.2.82 NMAC	MACT Standards for source categories of HAPS			No	X	Applies if other MACT subpart applies. The MACT Subpart ZZZZ applies as discussed below.

ED_004016Q_00002229-00196

Example of a Table for Applicable FEDERAL REGULATIONS (Note: This in not an exhaustive list):

FEDERAL REGU-LATIONS CITATION	Title	Applies to Entire Facility	Applies to Unit No(s).	Federally Enforce-able	Does Not Apply	JUSTIFICATION:
40 CFR 50	NAAQS	Yes		Yes		Defined as applicable at 20.2.70.7.E.11, Any national ambient air quality standard
NSPS 40 CFR 60, Subpart A	General Provisions		ENG 1-4, FUG-1	Yes		ENG 1-4 are engines subject to NSPS Subpart JJJJ. FUG-1 is subject to NSPS Subpart OOOOa.
NSPS 40 CFR Part 60 Subpart OOOO	Standards of Performance for Crude Oil and Natural Gas Production, Transmission, and Distribution				X	The facility is NOT subject to the provisions of NSPS Subpart OOOO because the facility shall be constructed after September 18, 2015.
NSPS 40 CFR Part 60 Subpart OOOOa	Standards of Performance for Crude Oil and Natural Gas Facilities for which Construction, Modification or Reconstruction Commenced After September 18, 2015		Oil Well Completi ons, FUG-1	Yes		The facility IS subject to the provisions of NSPS Subpart OOOOa listed below because: - The fugitive emission components will be subject to the monitoring requirements under this regulation. - Oil well Reduced Emission Completions (REC's) after November 30, 2016. The facility is NOT subject to the provisions of NSPS Subpart OOOOa listed below because: - The compressors at this site are co-located with the wellhead, so the compressor requirements are not applicable. - There are no gas-fired, continuous high bleed pneumatic controllers at this site, so the pneumatic controller requirements are not applicable. - There are no gas-fired, pneumatic pumps at this site, so the pneumatic pump requirements are not applicable. - The oil tanks and produced water tank emit less than 6 tpy VOC per tank, therefore the storage vessel requirements are not applicable. VRT 1-2 are vapor recovery tanks rather than storage vessels per the definitions in §60.5430. Therefore, the storage vessel requirements are not applicable.
NSPS 40 CFR Part 60 Subpart IIII					X	There are no engines subject to NSPS Subpart IIII at this facility.
NSPS 40 CFR Part 60 Subpart JJJJ			ENG 1-4	Yes		See 40 CFR 60.4230(a), 1 through 5 to determine applicable category and state engine size, fuel type, and date of manufacture. ENG 1-4 are engines subject to this Subpart. ☒ **Table 1 to Subpart JJJJ is attached with emission standards applicable to each engine highlighted.**
MACT 40 CFR 63, Subpart A	General Provisions				X	Applies if other MACT subpart applies. The MACT Subpart ZZZZ applies as discussed below.
MACT 40 CFR 63 Subpart ZZZZ	National Emissions Standards for Hazardous Air Pollutants for Stationary Reciprocating				X	Facilities are subject to this subpart if they own or operate a stationary RICE, except if the stationary RICE is being tested at a stationary RICE test cell/stand. ☐ **Table 1, 2, 3, 4, 5, 6, and/or 7 to Subpart ZZZZ is attached with emission standards/requirements applicable to each engine highlighted.**

FEDERAL REGU-LATIONS CITATION	Title	Applies to Entire Facility	Applies to Unit No(s).	Federally Enforce-able	Does Not Apply	JUSTIFICATION:
	Internal Combustion Engines (**RICE MACT**)					The facility is an **area** source of HAP, as defined under the regulation. Under §63.6590(a)(2)(iii) and (a)(3)(iii), a RICE located at an area source of HAP is a *new* or *reconstructed* unit if it is constructed or reconstructed on or after June 12, 2006. Under §63.6590(c)(1), a *new* or *reconstructed* SI RICE at an area source of HAP must meet the requirements of the part by meeting the requirements of 40 CFR 60, Subpart JJJJ (NSPS for Stationary Spark Ignition Internal Combustion Engines).

ED_004016Q_00002229-00198

Section 9: Certification

Company Name: WPX Energy Production, LLC

I, Nica Hoshijo, hereby certify that the information and data submitted in this application are true and as accurate as possible, to the best of my knowledge and professional expertise and experience.

Signed this 8 day of December, 2017, upon my oath or affirmation, before a notary of the State of

Colorado.

*Signature

Date 12/8/17

Nica Hoshijo
Printed Name

Staff Environmental Specialist
Title

Scribed and sworn before me on this 8 day of December, 2017.

My authorization as a notary of the State of Colorado expires on the

9th day of September, 2020.

Notary's Signature

Date 12/8/2017

Janine Martinez
Notary's Printed Name

JANINE MARTINEZ
NOTARY PUBLIC
STATE OF COLORADO
NOTARY ID 20164034882
MY COMMISSION EXPIRES SEPT 9 2020