WPXENERGY

December 8, 2017

Mr. Ted Schooley
Air Permits Program Manager
Air Quality Bureau
New Mexico Environment Department
525 Camino De los Marquez, Suite 1
Santa Fe, New Mexico 87505

Re: Air Quality Notice of Intent (NOI) Application for the W. Escavada UT #305/306 Well Site

Dear Mr. Schooley,

This letter and accompanying material is an air quality Notice of Intent (NOI) application for the W. Escavada UT #305/306 well site. The facility is located on an off-reservation individual Indian allotted land held in trust by the U.S. government for individual tribal members, and not a particular Indian tribe. Therefore, the facility is located on non-reservation allotted land over which neither a particular Indian tribe nor EPA has demonstrated inherent or statutorily delegated jurisdiction. The NMED Assistant General Counsel agreed that the State of New Mexico has regulatory jurisdiction under these circumstances, per an October 9, 2015 email to WPX Senior Counsel. The NMED Assistant General Counsel also noted in a November 25, 2015 email that Title Status Reports (TSR's) dated within 30 days of application submittal and either an affidavit stating as such or having BIA stamp the un-certified TSR would be acceptable to document this jurisdiction.

The well site is owned and operated by WPX Energy Production, LLC. The following excerpt from Section 3 summarizes equipment included in this application. Additionally, (1) the site-specific process vs. control determination for the VRU, (2) a legal letter regarding jurisdictional determinations, and (3) the TSR's are provided as attachments to this letter.

<u>Excerpt from Section 3:</u>

> The facility will consist of one of the compressor engine options listed in Table 3-1. These engines can use either natural gas or propane as fuel. The engine option set with the worst case emissions is included in the total facility emissions.
>
> The facility will also consist of: two vapor recovery tanks, fifteen oil tanks, two produced water tanks, four separator heaters, one fuel gas separator heater, either nine smaller generators or three larger generators, two emergency flares, and up to three electric vapor recovery units (VRU's) for product recovery. The three VRUs will be capable of working in parallel so in the event one of the VRUs goes down or is not operational, the vapors will be directed to the other VRUs for product recovery. Additionally, please reference the cover letter to this application for the site-specific process vs. control determination for the VRU and the Texas Commission on Environmental Quality (TCEQ) guidance document for the basis of the VRU capture efficiency.
>
> Two emergency flares are included in the application because the volume of gas needing to be combusted during an emergency event is unknown. Depending on the age of the well(s),

the number of wells on the pad, and the capacity the flare(s), more than one combustion device may be necessary. Examples of emergency events include: when the gathering company has a pipeline issue, such as if a compressor station suddenly goes down, and if the gas suddenly does not meet the pipeline quality specifications and is rejected by the gathering company. In the latter case, it is possible that the gas will have a sudden nitrogen increase due to a nearby frac and will not be accepted by the gathering company until the nitrogen decreases.

These events are not malfunctions as defined in 20.2.7.7.E NMAC but rather emergencies per 20.2.7.113 NMAC. It is not possible to estimate the number of occurrences of such emergencies as they are "sudden and reasonably unforeseeable events beyond the control of the permittee" by nature. However, if notified by a gas gathering company that a planned pipeline maintenance event was to occur, the operational protocol for the subject facility includes shutting the well(s) in for the duration of the planned maintenance event

WPX requests that AQB please email an electronic copy of the NOI once it is issued in addition to sending the original hard copy via certified mail. If you have any questions regarding this application, please contact me at (539) 573-0307 or nica.hoshijo@wpxenergy.com .

Sincerely,

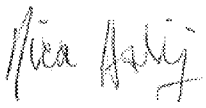

Nica Hoshijo, P.E.

Staff Environmental Specialist
WPX Energy, Inc.
1001 17th Street, Suite 1200
Denver, CO 80202
Office: (539) 573-0307
Cell: (303) 378-5750
nica.hoshijo@wpxenergy.com

Attachment:

1. Site-specific process vs. control determination for the VRU
2. Legal letter regarding jurisdictional determinations
3. Copies of current TSR's (pending)

## Attachment 1: Site-specific process vs. control determination for the VRU

The site-specific process vs. control determination for the VRU, per CDPHE PS Memo 99-3 and EPA 1999 Process Equipment Guidance is provided below:

*Please provide a Process vs. Control determination for the VRU, which addresses the three criteria in the attached memo [CDPHE PS Memo 99-3 and EPA 1999 Process Equipment Guidance].*

1. *Is the primary purpose of the equipment to control air pollution?*

   No, the primary purpose of the VRU equipment is to recover product. The VRU recovers tank vapors and routes them into an available gas sales line.

2. *Where the equipment is recovering product, how do the cost savings from the product recovery compare to the cost of the equipment?*

   The cost benefit analysis of the VRU equipment compared to the product recovered is shown below:

| | | | |
|---|---|---|---|
| Capital cost of VRU[1]: | $148,500 | Total hydrocarbons sent to VRU (ton/yr)[2]: | 1,873.12 |
| Monthly cost of VRU[1]: | $4,350 | Richness of tank vapors (BTU/scf)[3]: | 2,294.43 |
| | | Price per MMBtu[4]: | $3.25 |
| | | | |
| **Year 1 Cost[1]:** | **$200,700** | **Year 1 Cost Savings[1,5]:** | **$264,422** |
| **Year 2+ Cost[1]:** | **$52,200** | **Year 2+ Cost Savings[1,5]:** | **$264,422** |

1 – All estimates shown in 2017 dollars unless specified otherwise.
2 – Total hydrocarbon (THC) estimates of tank vapors per E&P Tanks v3.0, including 99.2% VRU recovery efficiency. Estimates reflect a throughput of 3,800 bbls oil per day.
3 – Per E&P Tanks v3.0.
4 – EIA *Natural Gas Weekly Update* for the week of 1/25/2017.
5 - Calculation includes standard natural gas density of 379 scf/lb-mol, flash gas molecular weight of 40.04 lb/lb-mol per E&P Tanks v3.0, and the conversion 2,000 lbs/ton.

As detailed above, the average annual estimated cost savings from recovered product is higher than the average annual estimated cost of the VRU equipment. Capital costs are attributed to the first year of operations, and the first year return on investment (ROI) is approximately 32%. The second year of operations (and beyond) presents a potential ROI of 407%. Please note that cost estimates are not adjusted for inflation and do not account for volatility in gas prices. Additionally, there is a potentially much higher return if additional wells are serviced by this site in the future.

3. *Would the equipment be installed if no air quality regulations are in place?*

   Yes, the VRU equipment would still be installed if no air quality regulations were in place due to the significant cost benefits of product recovery.

The basis for the VRU product recovery efficiency, per the Texas Commission on Environmental Quality (TCEQ) document *Vapor Recovery Unit Capture/Control Guidance* (Feb. 2012) is provided below:

> Please note that the capture efficiency for the VRU is assumed to be 100% per the TCEQ guidance document *Vapor Recovery Unit Capture/Control Guidance*, dated Feb. 2012. The criteria for the capture efficiency determination are listed below. The 100% capture efficiency along with the 95% operational uptime assumption per NSPS OOOO §60.5411(c)(2) results in an overall VRU recovery efficiency of 95%.
>
> ***Requirements for Claiming Up to and Including 95% Control Efficiency:***
> *In order for an applicant to claim 95% capture efficiency for an mVRU [Mechanical Vapor Recovery Unit] the applicant must satisfy the basic design requirements by providing detailed explanation and supplemental information as needed if the following questions are answered in the affirmative.*
>
> 1. *Is the mVRU designed to capture vapor?*
>
>  Yes, the VRU is designed to capture tank vapors.
>
> 2. *Is there sensing equipment which enables the applicant to know that the mVRU is capturing vapor(s) at peak intervals? An example is a pressure sensor, which senses the pressure of the vapors in the tank and communicates to the mVRU compressor to turn on, meaning to start drawing suction on the tank.*
>
>  Yes, the rotary screw compressor within the VRU operates with a variable speed drive which allows the unit to automatically adjust to changes in flow rates, including increases during peak intervals.
>
> ***Requirements for Claiming Over 95% Control Efficiency up to and Including 100% Control Efficiency:***
>
> *In order for an applicant to claim 100% capture efficiency for an mVRU the applicant must satisfy additional design requirements and monitoring/recordkeeping requirements such as those that are listed below by providing detailed explanation and supplemental information as needed if the following questions are answered in the affirmative. Starting at 95%, assuming the basic design requirements listed above are satisfied, one additional percentage can be claimed for each additional design requirement, up to 99% control efficiency. In order for 100% control efficiency to be claimed, monitoring/recordkeeping must be done.*
>
> *It should be noted that the design requirements listed below are the general elements that allow an mVRU to function most efficiently. It is possible that certain mVRUs function differently, meaning that there are different design requirements that allow the unit to function efficiently or the design of a unit is such that the need for a certain design requirement is eliminated. Therefore, an efficiency percentage can be claimed if it is explained*

*why a certain design requirement is not needed for the mVRU to maintain its claimed control efficiency.*

1. *Is there any additional sensing equipment associated with the mVRU that enables greater efficiency or control? Additional sensing equipment could consist of more of the same sensor type to ensure redundancy or varying sensor types to provide more information about the mVRU system and the units under control. These sensors shall include, but are not limited to, pressure sensors, flow meters, motion sensors or alarms, and temperature sensors. All sensing devices associated with maintaining claimed control efficiency must be able to cause appropriate responsive action. For example, sensors could be set up throughout the process in order to communicate to the mVRU when there is a reason to re-direct streams or close off streams, such as in the case of a tank with a leak.*

   Yes, there is additional sensing equipment associated with the VRU that enables greater efficiency and control. There is a minimum pressure valve, high compressor oil temperature shutdown, low suction pressure shutdown, high discharge pressure shutdown, automatic blowdown device, and pressure relief valves.

2. *Is there an appropriately designed bypass system which operates automatically and re-directs streams as needed? By re-direct streams as needed, this means that discharge volume is routed back to the inlet of the mVRU until the appropriate pressure is built up for the compressor to turn on, eliminating the possibility of a vacuum. It also means that if the mVRU fails, the controlled stream(s) will be re-routed to another control device or to atmosphere as designed. Furthermore, if one out of multiple controlled units fails, the mVRU will still be able to capture the stream(s) from other controlled unit(s) because the failed unit stream will be re-directed appropriately, eliminating the possibility of a vacuum. If there is only one controlled stream, the mVRU should turn off if the controlled unit fails. The vacuum occurs when back-pressure is not maintained, meaning that the pressure is lower on the inlet side to the VRU and higher on the outlet side, which does not facilitate the movement of gas, and thereby creates a hazardous condition.*

   Yes, there is an appropriately designed bypass system which operates automatically and re-directs streams as needed. The unit is equipped with a low suction bypass that allows a controlled amount of gas from the higher pressure discharge side to re-circulate to the inlet scrubber vessel. This is to prevent a vacuum from being pulled on the tanks.

3. *Is there a system in place to ensure that no oxygen is allowed to be pulled into the system, such as a gas blanketing system?*

   Yes, there is a blanket gas system in place to ensure that no oxygen is allowed to be pulled into the unit.

4. *Is a sufficient compressor capable of recovering both wet and dry gas used in conjunction with the mVRU? Is the compressor capable of varying the operating speed of the compressor to respond to conditions of varying environmental and operational conditions?*

   Yes, a rotary screw compressor is used in the VRU. This type of compressor is well suited for both wet and dry gas. The compressor's 10 hp electric motor uses a variable speed drive to respond to varying environmental and operational conditions.

5. *Continuous monitoring/recordkeeping is required in order to demonstrate that the mVRU is maintaining its claimed control efficiency. Also, a vendor data sheet or some other supplemental information needs to be included in the permit application to show that the basic and additional design requirements are met. The following are some examples of monitoring/recordkeeping that could be done to show that the mVRU is maintaining its claimed control efficiency:*

    a. *If a pressure trigger is used to start a compressor to direct gases to the product line, a continuous pressure recording showing the pressure in the tank that would cause the gas to escape to the atmosphere through a pressure relief valve or hatch was never exceeded.*

    b. *If a tank is hard piped to the product line through a compressor and the only atmospheric relief is through a pressure relief valve on the tank, a continuous monitor recording on the valve position indicating that it never opened.*

    c. *The date and time that all tank hatches and relief valves are noted to be sealed and that they were resealed after each intentional opening.*

    d. *The date and time that that a periodic check was conducted of the controlled vessel and control device noting no holes, worn seals, or other defects are present that would allow an uncontrolled release to the atmosphere.*

    Monthly preventative maintenance checks are conducted to inspect the closed vent system on the tanks as well as proper operation of the VRU. In addition to these manual checks, the VRU uptime is continuously monitored by an internal system. All inspections and continuous monitoring data is recorded.

Based on the TCEQ guidance for determining VRU capture efficiency, WPX meets the basic design requirements as listed, the four additional design requirements, and the monitoring/recordkeeping requirements. As such, WPX assumes the VRU operates with 100% capture efficiency as shown in the table below. Excerpts from the VRU service and maintenance manual are provided in Section 7 of this application for further detail.

| Criteria | Applicable | Capture Efficiency |
|---|---|---|
| 1. Basic design requirements | X | 95% |
| 2. Four additional design requirements | X | 4% |
| 3. Monitoring & Recordkeeping | X | 1% |
| **Total Capture Efficiency** | | **100%** |

**LISA A. DECKER**
Senior Counsel
(303) 606-4080
lisa.decker@wpxenergy.com

December 8, 2017

Ted Schooley
New Mexico Environment Department
Air Quality Bureau
525 Camino de los Marquez, Suite 1
Santa Fe, New Mexico, 87505-1816

***Via Email: R9AirPermits@epa.gov***
U.S. EPA Region 9
Tribal Program Office
75 Hawthorne Street
San Francisco, CA 94105

***Via Email: rios.gerardo@epa.gov***
Gerardo Rios
U.S. EPA Region 9
Air Permits Office (AIR-3)
75 Hawthorne Street
San Francisco, CA 94105

Re: Air Quality Notice of Intent (NOI) Application for the W Escavada UT #305/306 Oil Production Facility

Dear Mr. Schooley and Mr. Rios,

Enclosed with this letter is the Air Quality Notice of Intent (NOI) application for the W Escavada UT #305/306 Well Site that WPX Energy Production, LLC (WPX Energy) is simultaneously submitting to the New Mexico Environment Department (NMED), Air Quality Bureau.

The site is located on an off-reservation individual Indian allotted land held in trust by the U.S. government for individual tribal members, and not a particular Indian tribe. Therefore, the facility is located on non-reservation allotted land over which neither a particular Indian tribe nor EPA has demonstrated inherent or statutorily delegated jurisdiction. As such, NMED has air permit jurisdiction over this well site. *See Okla. Dep't of Envtl. Quality v. EPA*, 740 F.3d 185 (Jan. 17, 2014). As reference, for the N Escavada UT

#305/306 application, the map with the location is located in Section 7 of the application attachments. We have also included a current title status report (TSR) documenting the status of the lands for which this permit is sought.

I am simultaneously sending this letter to the United States Environmental Protection Agency, Region 9, for the purposes of informing EPA of our jurisdictional determination. WPX Energy will assume that it has filed the air quality NOI with the appropriate jurisdiction (NMED) unless we hear otherwise from EPA in writing no later than December 22, 2017.

Very truly yours,

Lisa A. Decker

Lisa A. Decker

cc: Nica Hoshijo, WPX Energy

THIS MULTI-TONE AREA OF THE DOCUMENT CHANGES COLOR GRADUALLY AND EVENLY FROM DARK TO LIGHT.

Tract: Dec Yellow 8300

Accounting Code: 3050 0570

Rec WT1 Pg WT

WPXENERGY

Ship To: 53554

WPX ENERGY, INC.
PO BOX 21218
TULSA, OK 74121-1218

No. 00011750

11/14 20 17

PAY TO THE ORDER OF: NMED

$ 500.00

DOLLARS: Five Hundred & no DOLLARS

FOR: W Escudero WT 305/304

| Social Security or Tax ID Number | Mailing Address | City, State, Zip Code |
|---|---|---|
| | 525 Camino de los Marquez | Sf NM 87505 |

WPX JPMorgan Chase Bank, N.A.
Chicago, Illinois
70-2322 / 719

AUTHORIZED SIGNATURE

⑈0000011750⑈ ⑆071923226⑆ 0914788⑈

THE ORIGINAL DOCUMENT HAS A REFLECTIVE WATERMARK ON THE BACK. HOLD AT AN ANGLE TO VIEW WHEN CHECKING THE ENDORSEMENT.

| Mail Application To: | | For Department use only: |
|---|---|---|
| New Mexico Environment Department<br>Air Quality Bureau<br>Permits Section<br>525 Camino de los Marquez, Suite 1<br>Santa Fe, New Mexico, 87505<br><br>Phone: (505) 476-4300<br>Fax: (505) 476-4375<br>www.env.nm.gov/aqb | | AIRS No.: |

# NOI Application for Oil and Gas Production Facilities

**Use this application only for oil and gas production facilities registering under 20.2.73 NMAC**

Submit the entire application (Parts 1, 2, and 3) on a single CD (no copies of the CD are needed). Hard copies of Part 1, Tables 2A, 2D, 2E & 2F of Part 2, and Sections 3 and 9 of Part 3 are required.

**This application is being submitted as** (check all that apply)**:**

☐ **Updating** an application currently under NMED review. Include this page and all pages that are being updated (no fee required).

Construction Status: ☑ Not Constructed ☐ Existing Permitted (or NOI) Facility ☐ Existing Non-permitted (or NOI) Facility

☒ **Acknowledgement that facilities with the following equipment or equipment options may not use this application form and should use the regular NOI form:** glycol dehydrators, non-NMED deration method, and applications with multiple equipment options.

☒ **Acknowledgement that this application contains the required Equipment Forms which are required to be used to determine emissions from equipment:** https://www.env.nm.gov/aqb/permit/Permit_Apps/AirQualityPermitNOIApplication.html

☐ **This facility qualifies to receive assistance from the Small Business Environmental Assistance Program (SBEAP).** To see if you qualify for SBEAP assistance go to https://www.env.nm.gov/aqb/sbap/small_business_criteria.html

**Acknowledgements:** ☑ I acknowledge that a pre-application meeting is available to me upon request

☑ $500 NSR Permit Filing Fee enclosed ☑ Check No.: 11750 in the amount of $500

# Section 1 – Facility Information

| Section 1-A: Company Information | | AI No. (if known): TBD | Updating Permit/NOI/NPR No.: TBD |
|---|---|---|---|
| 1 | Facility Name: W. Escavada UT #305/306 | Plant primary SIC Code (4 digits): 1311 | |
| a | Facility Street Address (If no facility street address, provide directions from a prominent landmark): From the intersection of US Hwy 550 & US Hwy 64 in Bloomfield, NM, travel Southerly on US Hwy 550 for 53.6 miles to Mile Marker 97.7; Go Right (Southerly) on Indian Service Route #474 for 4.9 miles to fork in roadway; Go Right (Westerly) exiting Indian Service Route #474 for 2.5 miles to fork in roadway; Go Right (Westerly) which is straight for 0.3 miles to fork in roadway; Go Right (Westerly) which is straight for 1.0 miles to four-way intersection; Go Straight (Westerly) for 1.2 miles to four-way intersection; Go Left (Southerly) for 1.7 miles to four-way intersection; Go Right (Westerly) for 1.9 miles to begin WPX N Escavada UT #317H & WPX W Escavada UT #300H proposed access's for 2684.0' to fork in proposed roadway; Go Left (Southerly) which is straight following along WPX W Escavada UT #302H proposed access for 4226.1' to fork in proposed roadway; Go Right (Westerly) continuing for an additional 4624.7' to staked WPX W. Escavada UT #305H location. | | |
| 2 | Plant Operator Company Name: WPX Energy Production, LLC | Phone/Fax: (505) 333-1800 | |
| a | Plant Operator Address: 721 S. Main, P.O. Box 640, Aztec, NM 87410 | | |
| b | Plant Operator's New Mexico Corporate ID or Tax ID: 87-0480555 | | |
| 3 | Plant Owner(s) name(s): WPX Energy Production, LLC | Phone/Fax: (505) 333-1800 | |
| a | Plant Owner(s) Mailing Address(s): 721 S. Main, P.O. Box 640, Aztec, NM 87410 | | |
| 4 | Bill To (Company): WPX Energy Production, LLC | Phone/Fax: (539) 573-0306 | |



ED_004016Q_00001316-00010

| | | |
|---|---|---|
| a | Mailing Address: 1001 17th St., Suite 1200, Denver, CO 80202 | E-mail: JoDell.Mizoue@wpxenergy.com |
| 5 | ☑ Preparer: Nica Hoshijo, Staff Environmental Specialist<br>☐ Consultant: | Phone/Fax: (539) 573-0307 |
| a | Mailing Address: 1001 17th St., Suite 1200, Denver, CO 80202 | E-mail: nica.hoshijo@wpxenergy.com |
| 6 | Plant Operator Contact: Robert Jordan | Phone/Fax: (505) 333-1850 |
| a | Address: 721 S. Main, P.O. Box 640, Aztec, NM 87410 | E-mail: Robert.jordan@wpxenergy.com |
| 7 | Air Permit Contact: Nica Hoshijo | Title: Staff Environmental Specialist |
| a | E-mail: nica.hoshijo@wpxenergy.com | Phone/Fax: (539) 573-0307 |
| b | Mailing Address: 1001 17th St., Suite 1200, Denver, CO 80202 | |

## Section 1-B: Current Facility Status

| | | |
|---|---|---|
| 1.a | Has this facility already been constructed? ☐ Yes ☑ No | 1.b If yes to question 1.a, is it currently operating in New Mexico? ☐ Yes ☐ No |
| 2 | If yes to question 1.a, was the existing facility subject to a Notice of Intent (NOI) (20.2.73 NMAC) before submittal of this application?<br>☐ Yes ☐ No | If yes to question 1.a, was the existing facility subject to a construction permit (20.2.72 NMAC) before submittal of this application?<br>☐ Yes ☐ No |
| 3 | Is the facility currently shut down? ☐ Yes ☑ No | If yes, give month and year of shut down (MM/YY): |
| 4 | Was this facility constructed before 8/31/1972 and continuously operated since 1972? ☐ Yes ☑ No | |
| 5 | If Yes to question 3, has this facility been modified (see 20.2.72.7.P NMAC) or the capacity increased since 8/31/1972?<br>☐Yes ☐No ☑N/A | |
| 6 | Is this facility a single source as defined in 20.2.73 NMAC? ☑ Yes ☐No | |
| 7 | Is this facility a Title V or a PSD Major Source? ☐Yes ☑ No | |

## Section 1-C: Facility Capacity & Production Rate

| | | | | |
|---|---|---|---|---|
| 1 | What is the facility's maximum capacity of oil and gas? Specify units and identify oil and gas separately. | | | |
| a | Current | Oil Hourly:<br>Gas Hourly: | Oil Daily:<br>Gas Daily: | Oil Annually:<br>Gas Annually: |
| b | Proposed | Oil Hourly: 158.3 bbl/hr<br>Gas Hourly: 166.7 Mscf/hr | Oil Daily: 3,800 bbl/day<br>Gas Daily: 4,000 Mscf/day | Oil Annually: 1,387,000 bbl/yr<br>Gas Annually: 1,460,000 Mscf/yr |
| 2 | What is the facility's maximum production rate of oil and gas? Specify units and identify oil and gas separately. | | | |
| a | Current | Oil Hourly:<br>Gas Hourly: | Oil Daily:<br>Gas Daily: | Oil Annually:<br>Gas Annually: |
| b | Proposed | Oil Hourly: 158.3 bbl/hr<br>Gas Hourly: 166.7 Mscf/hr | Oil Daily: 3,800 bbl/day<br>Gas Daily: 4,000 Mscf/day | Oil Annually: 1,387,000 bbl/yr<br>Gas Annually: 1,460,000 Mscf/yr |

## Section 1-D: Facility Location Information

| | | | | | |
|---|---|---|---|---|---|
| 1 | Section: 17 | Range: 7W | Township: 22N | County: San Juan | Elevation (ft): 6,805 |
| 2 | UTM Zone: ☐ 12 or ☑ 13 | | | Datum: ☐ NAD 27 ☑ NAD 83 ☐ WGS 84 | |
| a | UTM E (in meters, to nearest 10 meters): 265490 | | | UTM N (in meters, to nearest 10 meters): 4001930 | |
| b | **AND** Latitude (deg., min., sec.): 36° 8' 1.42" N | | | Longitude (deg., min., sec.): 107° 36' 22.13" W | |
| 3 | Name and zip code of nearest New Mexico town: Counselor, NM 87018 | | | | |

| | |
|---|---|
| 4 | Detailed Driving Instructions from nearest NM town (attach a road map if necessary): From the intersection of US Hwy 550 & US Hwy 64 in Bloomfield, NM, travel Southerly on US Hwy 550 for 53.6 miles to Mile Marker 97.7; Go Right (Southerly) on Indian Service Route #474 for 4.9 miles to fork in roadway; Go Right (Westerly) exiting Indian Service Route #474 for 2.5 miles to fork in roadway; Go Right (Westerly) which is straight for 0.3 miles to fork in roadway; Go Right (Westerly) which is straight for 1.0 miles to four-way intersection; Go Straight (Westerly) for 1.2 miles to four-way intersection; Go Left (Southerly) for 1.7 miles to four-way intersection; Go Right (Westerly) for 1.9 miles to begin WPX N Escavada UT #317H & WPX W Escavada UT #300H proposed access's for 2684.0' to fork in proposed roadway; Go Left (Southerly) which is straight following along WPX W Escavada UT #302H proposed access for 4226.1' to fork in proposed roadway; Go Right (Westerly) continuing for an additional 4624.7' to staked WPX W. Escavada UT #305H location. |
| 5 | The facility is 9.77 (distance) miles SW (direction) of Counselor (nearest town). |
| 6 | Status of land at facility (check one): ☐ Private ☐ Indian/Pueblo ☐ Federal BLM ☐ Federal Forest Service ☑ Other (specify) The facility is located on an off-reservation individual Indian allotted land held in trust by the U.S. government for individual tribal members, and not a particular Indian Tribe. Therefore, the facility is located on non-reservation allotted land over which neither a particular Indian tribe nor EPA has demonstrated inherent or statutorily delegated jurisdiction. |
| 7 | Will this facility operate in conjunction with other air regulated parties on the same property? ☒ No ☐ Yes<br>If yes, what is the name and permit number (if known) of the other facility? |

## Section 1-E: Proposed Operating Schedule

| | | | | |
|---|---|---|---|---|
| 1 | Facility **maximum** operating ($\frac{hours}{day}$): 24 | ($\frac{days}{week}$): 7 | ($\frac{weeks}{year}$): 52 | ($\frac{hours}{year}$): 8760 |

## Section 1-F: Other Facility Information

| | | | |
|---|---|---|---|
| 1 | Are there any current Notice of Violations (NOV), compliance orders, or any other compliance or enforcement issues related to this facility? ☐ Yes ☑ No If yes, specify: | | |
| a | If yes, NOV date or description of issue: | | NOV Tracking No: |
| b | Is this application in response to any issue listed in 1-F, 1 or 1a above? ☐ Yes ☑ No If Yes, provide the 1c & 1d info below: | | |
| c | Document Title: | Date: | Requirement # (or page # and paragraph #): |

# Section 1-I – Submittal Requirements

Each 20.2.73 NMAC (**NOI**) application package shall consist of the following:

### Hard Copy Submittal Requirements:

1) Hard copies of Part 1, Tables 2A, 2D, 2E, and 2F of Part 2, and Section 3 of Part 3 and the signed Certification Page are required.
2) The entire NOI application should be submitted electronically on compact disk (CD).

### Electronic Submittal Requirements [in addition to the required hard copy(ies)]:

1) A single PDF document of the entire application as submitted and the individual documents comprising the application.
2) The documents should also be submitted in Microsoft Office compatible file format (Word, Excel, etc.) allowing us to access the text in the documents (copy & paste). Any documents that cannot be submitted in a Microsoft Office compatible format shall be saved as a PDF file from within the electronic document that created the file. If you are unable to provide Microsoft office compatible electronic files or internally generated PDF files of files (items that were not created electronically: i.e. brochures, maps, graphics, etc,), submit these items in hard copy format with the number of additional hard copies. We must be able to review the formulas and inputs that calculated the emissions.
3) It is preferred that this application form be submitted as 3 electronic files (2 MSWord docs: Application section 1 and Application section 3-9) and 1 Excel file of the tables (Application section 2) on the CD. Please include as many of the 3-9 Sections as practical in a single MS Word electronic document. Create separate electronic file(s) if a single file becomes too large or if portions must be saved in a file format other than MS Word.
4) The electronic file names shall be a maximum of 25 characters long (including spaces, if any). The format of the electronic Application shall be in the format: "A-3423-FacilityName". The "A" distinguishes the file as an application submittal, as opposed to other documents the Department itself puts into the database. Thus, all electronic application submittals should begin with "A-". Modifications to existing facilities should use the core NOI number (i.e. '3423') the Department assigned to the



ED_004016Q_00001316-00012

facility as the next 4 digits. Use 'XXXX' for new facility applications. The format of any separate electronic submittals (additional submittals such as non-Word attachments, re-submittals, application updates) and Section document shall be in the format: "A-3423-9-description", where "9" stands for the section # (in this case Section 9-Certification Page). Please refrain, as much as possible, from submitting any scanned documents as this file format is extremely large, which uses up too much storage capacity in our database. Please take the time to fill out the header information throughout all submittals as this will identify any loose pages, including the Application Date (date submitted) & Revision # (0 for original, 1, 2, etc.; which will help keep track of subsequent partial update(s) to the original submittal. The footer information should not be modified by the applicant.



ED_004016Q_00001316-00013

## Table of Contents

**Section 1:** **Facility Information**
**Section 2:** **Tables**
**Section 3:** **Application Summary and Routine Operations**
**Section 4:** **Process Flow Sheet**
**Section 5:** **All Calculations, plus required Equipment Forms (Air Emissions Calculation Tool)**
**Section 6:** **Information Used to Determine Emissions**
**Section 7:** **Map(s)**
**Section 8:** **Applicable State & Federal Regulations**
**Section 9:** **Certification Page**



ED_004016Q_00001316-00014

# Table 2-A: Regulated Emission Sources

Unit and stack numbering must correspond throughout the application package. Equipment exemptions under 2.72.202 NMAC do not apply to 20.2.73 NMAC. Identify process equipment that is used to reroute emissions back into the process or sales pipeline in Table 2-A, such as a VRU, VRT, ULPS, Flashing Vessel, or Blowcase.

| Unit Number[1] | Source Description | Make | Model # | Serial # | Manufacturer's Rated Capacity[3] (Specify Units) | Requested Permitted Capacity[3] (Specify Units) | Date of Manufacture[2] / Date of Construction/ Reconstruction[2] | Controlled by Unit # / Emissions vented to Stack # | Source Classification Code (SCC) | For Each Piece of Equipment, Check One | RICE Ignition Type (CI, SI, 4SLB, 4SRB, 2SLB)[4] | Replacing Unit No. |
|---|---|---|---|---|---|---|---|---|---|---|---|---|
| ENG-1[5] | Compressor Engine, x1 | Caterpillar | G3508B | TBD | 690 hp | 632 hp | After 7/1/2010 / TBD | N/A / ENG-1[5] | 20200254 | ☑ New/Additional ☐ Existi ☐ Re ☐ To Be | 4SLB | N/A |
| VRT 1-2 | Vapor Recovery Tank, Oil/PW, x2 (with VRU for product recovery) | TBD | TBD | TBD | 750 bbl ea. | 750 bbl ea. | TBD / TBD | N/A / VRT 1-2 | 40400312 | ☑ New/Additional ☐ Existi ☐ Re ☐ To Be | N/A | N/A |
| TK 1-15 | Storage Tanks, Post-Flash Oil, x15 (with VRU for product recovery) | TBD | TBD | TBD | 500 bbl ea. | 500 bbl ea. | TBD / TBD | N/A / TK 1-15 | 40400301 / 40400302 | ☑ New/Additional ☐ Existi ☐ Re ☐ To Be | N/A | N/A |
| PWTK 1-2 | Storage Tanks, Post-Flash Produced Water, x2 | TBD | TBD | TBD | 500 bbl ea. | 500 bbl ea. | TBD / TBD | N/A / PWTK 1-2 | 40400301 / 40400302 | ☑ New/Additional ☐ Existi ☐ Re ☐ To Be | N/A | N/A |
| HT 1-4 | Natural Gas Fired, Separator Heaters, x4 | Shurefire | TBD | TBD | 1.25 MMbtu/hr | 1.25 MMbtu/hr | TBD / TBD | N/A / HT 1-4 | 31000107 | ☑ New/Additional ☐ Existi ☐ Re ☐ To Be | N/A | N/A |
| HT-5 | Natural Gas Fired, Fuel Gas Separator Heater, x1 | Shurefire | TBD | TBD | 700 Mbtu/hr | 700 Mbtu/hr | TBD / TBD | N/A / HT-5 | 31000107 | ☑ New/Additional ☐ Existi ☐ Re ☐ To Be | N/A | N/A |
| GEN-1[5] | Generators, up to 9 | Capstone | C-65 | TBD | 87 hp | 87 hp | TBD / TBD | N/A / GEN-1[5] | 20100201 | ☑ New/Additional ☐ Existi ☐ Re ☐ To Be | N/A | N/A |
| OILLOAD-1 | Truck Loading (Oil Loadout) | N/A | N/A | N/A | N/A | N/A | N/A / N/A | N/A / N/A | 31000199 | ☑ New/Additional ☐ Existi ☐ Re ☐ To Be | N/A | N/A |
| FUG-1 | Equipment Leaks (Fugitives) | N/A | N/A | N/A | N/A | N/A | N/A / N/A | N/A / N/A | 31000101 | ☑ New/Additional ☐ Existi ☐ Re ☐ To Be | N/A | N/A |
| COMP-1[5] | Reciprocating Compressor(s), x1 | TBD | TBD | N/A | N/A | N/A | TBD / TBD | N/A / N/A | 31000203 | ☑ New/Additional ☐ Existi ☐ Re ☐ To Be | N/A | N/A |
| FL 1-2 | Flares, x2 | TBD | TBD | TBD | TBD | TBD | TBD / TBD | N/A / FL 1-2 | 31000160 | ☑ New/Additional ☐ Existi ☐ Re ☐ To Be | N/A | N/A |
| ROAD-1 | Road Dust | N/A | N/A | N/A | N/A | N/A | N/A / N/A | N/A / N/A | 31000199 | ☑ New/Additional ☐ Existi ☐ Re ☐ To Be | N/A | N/A |
| VRU 1-3 | Vapor Recovery Unit (VRU), x3 | N/A | N/A | N/A | 10-75 hp | 10-75 hp | N/A / N/A | N/A / N/A | 31000199 | ☑ New/Additional ☐ Existi ☐ Re ☐ To Be | N/A | N/A |

[1] Unit numbers must correspond to unit numbers in the previous NOI unless a complete cross reference table of all units in both NOIs is provided.
[2] Specify dates required to determine regulatory applicability.
[3] To properly account for power conversion efficiencies, generator set rated capacity shall be reported as the rated capacity of the engine in horsepower, not the kilowatt capacity of the generator set.
[4] "4SLB" means four stroke lean burn engine, "4SRB" means four stroke rich burn engine, "2SLB" means two stroke lean burn engine, "CI" means compression ignition, and "SI" means spark ignition
[5] These "composite" emissions represent the worse case emissions.



ED_004016Q_00001316-00015

# Table 2-C: Emissions Control Equipment

Unit and stack numbering must correspond throughout the application package. The permittee shall report all control devices and list each pollutant controlled by the control device regardless if the applicant takes credit for the reduction in emissions. Flares, Enclosed Combustion Devices, Catalytic Converters and Air Fuel Ratio (AFR) Controllers shall be reported on Table 2-C. For each AFR, note whether the AFR are aftermarket or integral to the engine.

| Control Equipment Unit No. | Control Equipment Description | Date Installed | Controlled Pollutant(s) | Controlling Emissions for Unit Number(s)[1] | Efficiency (% Control by Weight) | Method used to Estimate Efficiency |
|---|---|---|---|---|---|---|
| ENG-1 | Oxidative Catalyst | TBD | CO | ENG-1 | 22% CO | Subpart JJJJ + Mfr. Data |
| FL 1-2 | Flares | TBD | VOC | FL 1-2 | 95% VOC | Engineering Knowledge |
| | | | | | | |
| | | | | | | |
| | | | | | | |
| | | | | | | |
| | | | | | | |
| | | | | | | |
| | | | | | | |
| | | | | | | |

[1] List each control device on a separate line. For each control device, list all emission units controlled by the control device.



ED_004016Q_00001316-00016

# Table 2-D: Maximum Emissions (under normal operating conditions)

Maximum Emissions are the emissions at maximum capacity and prior to (in the absence of) pollution control, emission-reducing process equipment, or any other emission reduction. Calculate the hourly emissions using the worst case hourly emissions for each pollutant. For each pollutant, calculate the annual emissions as if the facility were operating at maximum plant capacity without pollution controls for 8760 hours per year. List Hazardous Air Pollutants (HAP) & Toxic Air Pollutants (TAPs) in Table 2-I. Unit & stack numbering must be consistent throughout the application package. Fill all cells in this table with the emission numbers or a "-" symbol. A "-" symbol indicates that emissions of this pollutant are not expected. Numbers shall be expressed to at least 2 decimal points (e.g. 0.41, 1.41, or 1.41E-4). List tank flashing emissions separately from tank working and breathing losses.

| Unit No. | NOx | | CO | | VOC | | SOx | | TSP[a] | | PM10[a] | | PM2.5[a] | | $H_2S$ | | Lead | |
|---|---|---|---|---|---|---|---|---|---|---|---|---|---|---|---|---|---|---|
| | lb/hr | ton/yr | lb/hr | ton/yr | lb/hr | ton/yr | lb/hr | ton/yr | lb/hr | ton/yr | lb/hr | ton/yr | lb/hr | ton/yr | lb/hr | ton/yr | lb/hr | ton/yr |
| ENG-1[2] | 11.7 | 51.4 | 14.1 | 61.9 | 6.0 | 26.1 | 0.02 | 0.09 | 0.28 | 1.2 | 0.28 | 1.2 | 0.28 | 1.2 | -- | -- | -- | -- |
| VRT 1-2 | -- | -- | -- | -- | 2.7 | 11.7 | -- | -- | -- | -- | -- | -- | -- | -- | -- | -- | -- | -- |
| TK 1-10 | -- | -- | -- | -- | 0.40 | 1.5 | -- | -- | -- | -- | -- | -- | -- | -- | -- | -- | -- | -- |
| TK 11-15 | -- | -- | -- | -- | 0.17 | 0.76 | -- | -- | -- | -- | -- | -- | -- | -- | -- | -- | -- | -- |
| PWTK 1-2 | -- | -- | -- | -- | 0.00 | 0.00 | -- | -- | -- | -- | -- | -- | -- | -- | -- | -- | -- | -- |
| HT 1-5 | 0.56 | 2.5 | 0.47 | 2.1 | 0.03 | 0.14 | 0.00 | 0.00 | 0.04 | 0.18 | 0.04 | 0.18 | 0.04 | 0.18 | -- | -- | -- | -- |
| GEN-1[3] | 0.28 | 1.2 | 0.73 | 3.2 | 0.06 | 0.26 | -- | -- | -- | -- | -- | -- | -- | -- | -- | -- | -- | -- |
| OILLOAD -1 | -- | -- | -- | -- | 17.8 | 41.0 | -- | -- | -- | -- | -- | -- | -- | -- | -- | -- | -- | -- |
| FUG-1 | -- | -- | -- | -- | 4.2 | 18.2 | -- | -- | -- | -- | -- | -- | -- | -- | -- | -- | -- | -- |
| COMP-1[4] | -- | -- | -- | -- | 0.32 | 1.4 | -- | -- | -- | -- | -- | -- | -- | -- | -- | -- | -- | -- |
| FL-1 | 0.05 | 0.24 | 0.25 | 1.1 | 0.46 | 2.0 | 0.00 | 0.00 | 0.00 | 0.01 | 0.00 | 0.01 | 0.00 | 0.01 | -- | -- | -- | -- |
| FL-2 | 0.05 | 0.24 | 0.25 | 1.1 | 0.46 | 2.0 | 0.00 | 0.00 | 0.00 | 0.01 | 0.00 | 0.01 | 0.00 | 0.01 | -- | -- | -- | -- |
| ROAD-1 | -- | -- | -- | -- | -- | -- | -- | -- | 7.4 | 7.5 | 1.9 | 1.9 | 0.19 | 0.19 | -- | -- | -- | -- |
| **Totals** | 12.7 | 55.5 | 15.8 | 69.3 | 32.4 | 105.1 | 0.02 | 0.09 | 7.7 | 8.9 | 2.2 | 3.3 | 0.52 | 1.6 | -- | -- | -- | -- |

[a] **Condensable Particulate Matter:** Include condensable particulate matter emissions for PM10 and PM2.5 if the source is a combustion source. Do not include condensable particulate matter for TSP unless TSP is set equal to PM10 and PM2.5.

[2] - Composite emissions represent the worst case compressor engine emissions. (ENG 1-5)

[3] - Composite emissions represent the worst case generator emissions. (GEN 1-9 OR GEN 10-12)

[4] - Composite emissions represent the worst case compressor emissions. (COMP 1-5)

ENG-1, VRT 1-2, TK 11-15, GEN-1, and COMP-1 emissions are based on emission calculation spreadsheet. PM emissions of FL 1-2 are based on emission calculation spreadsheet.



ED_004016Q_00001316-00017

# Table 2-E: Requested Allowable Emissions

Unit & stack numbering must be consistent throughout the application package. Fill all cells in this table with the emission numbers or a "-" symbol. A "-" symbol indicates that emissions of this pollutant are not expected. Numbers shall be expressed to at least 2 decimal points (e.g. 0.41, 1.41, or $1.41E^{-4}$). Note the Department has added a placeholder for SSM emissions on Table 2-E. Enter the total emissions from the "Totals line" in Table 2-F in the SSM row on Table 2-E. List tank flashing emissions separately from tank working and breathing losses.

| Unit No. | NOx | | CO | | VOC | | SOx | | TSP[1] | | PM10[1] | | PM2.5[1] | | $H_2S$ | | Lead | |
|---|---|---|---|---|---|---|---|---|---|---|---|---|---|---|---|---|---|---|
| | lb/hr | ton/yr | lb/hr | ton/yr | lb/hr | ton/yr | lb/hr | ton/yr | lb/hr | ton/yr | lb/hr | ton/yr | lb/hr | ton/yr | lb/hr | ton/yr | lb/hr | ton/yr |
| ENG-1[2] | 2.0 | 8.7 | 3.9 | 17.1 | 0.98 | 4.3 | 0.02 | 0.09 | 0.28 | 1.2 | 0.28 | 1.2 | 0.28 | 1.2 | -- | -- | -- | -- |
| VRT 1-2 | -- | -- | -- | -- | 2.7 | 11.7 | -- | -- | -- | -- | -- | -- | -- | -- | -- | -- | -- | -- |
| TK 1-10 | -- | -- | -- | -- | 0.40 | 1.5 | -- | -- | -- | -- | -- | -- | -- | -- | -- | -- | -- | -- |
| TK 11-15 | -- | -- | -- | -- | 0.17 | 0.76 | -- | -- | -- | -- | -- | -- | -- | -- | -- | -- | -- | -- |
| PWTK 1-2 | -- | -- | -- | -- | 0.00 | 0.00 | -- | -- | -- | -- | -- | -- | -- | -- | -- | -- | -- | -- |
| HT 1-5 | 0.56 | 2.5 | 0.47 | 2.1 | 0.03 | 0.14 | 0.00 | 0.00 | 0.04 | 0.18 | 0.04 | 0.18 | 0.04 | 0.18 | -- | -- | -- | -- |
| GEN-1[3] | 0.28 | 1.2 | 0.73 | 3.2 | 0.06 | 0.26 | -- | -- | -- | -- | -- | -- | -- | -- | -- | -- | -- | -- |
| OILLOAD -1 | -- | -- | -- | -- | 17.8 | 41.0 | -- | -- | -- | -- | -- | -- | -- | -- | -- | -- | -- | -- |
| FUG-1 | -- | -- | -- | -- | 4.2 | 18.2 | -- | -- | -- | -- | -- | -- | -- | -- | -- | -- | -- | -- |
| COMP-1[4] | -- | -- | -- | -- | 0.32 | 1.4 | -- | -- | -- | -- | -- | -- | -- | -- | -- | -- | -- | -- |
| FL-1 | 0.05 | 0.24 | 0.25 | 1.1 | 0.46 | 2.0 | 0.00 | 0.00 | 0.00 | 0.01 | 0.00 | 0.01 | 0.00 | 0.01 | -- | -- | -- | -- |
| FL-2 | 0.05 | 0.24 | 0.25 | 1.1 | 0.46 | 2.0 | 0.00 | 0.00 | 0.00 | 0.01 | 0.00 | 0.01 | 0.00 | 0.01 | -- | -- | -- | -- |
| ROAD-1 | -- | -- | -- | -- | -- | -- | -- | -- | 7.4 | 7.5 | 1.9 | 1.9 | 0.19 | 0.19 | -- | -- | -- | -- |
| **Totals** | 2.9 | 12.8 | 5.6 | 24.5 | 27.4 | 83.3 | 0.02 | 0.09 | 7.7 | 8.9 | 2.2 | 3.3 | 0.52 | 1.6 | -- | -- | -- | -- |

[1] **Condensable Particulate Matter:** Include condensable particulate matter emissions for PM10 and PM2.5 if the source is a combustion source. Do not include condensable particulate matter for TSP unless TSP is set equal to PM10 and PM2.5.

[2] - Composite emissions represent the worst case compressor engine emissions. (ENG 1-5)
[3] - Composite emissions represent the worst case generator emissions. (GEN 1-9 OR GEN 10-12)
[4] - Composite emissions represent the worst case compressor emissions. (COMP 1-5)

ENG-1, VRT 1-2, TK 11-15, GEN-1, and COMP-1 emissions are based on emission calculation spreadsheet. PM emissions of FL 1-2 are based on emission calculation spreadsheet.



ED_004016Q_00001316-00018

# Table 2-F: Additional Emissions during Startup, Shutdown, and Routine Maintenance (SSM)

☑ This table is intentionally left blank since all emissions at this facility due to routine or predictable startup, shutdown, or scehduled maintenance are no higher than those listed in Table 2-E and a malfunction emission limit is not already permitted or requested. If you are required to report GHG emissions as described in Section 6a, include any GHG emissions during Startup, Shutdown, and/or Scheduled Maintenance (SSM) in Table 2-P. Provide an explanations of SSM emissions in Section 6 and 6a.

All applications for facilities that have emissions during routine our predictable startup, shutdown or scheduled maintenance (SSM)[1], including NOI applications, must include in this table the Maximum Emissions during routine or predictable startup, shutdown and scheduled maintenance (20.2.7 NMAC, 20.2.72.203.A.3 NMAC, 20.2.73.200.D.2 NMAC). In Section 6 and 6a, provide emissions calculations for all SSM emissions reported in this table. Refer to "Guidance for Submittal of Startup, Shutdown, Maintenance Emissions in Permit Applications (https://www.env.nm.gov/aqb/permit/aqb_pol.html) for more detailed instructions. Numbers shall be expressed to at least 2 decimal points (e.g. 0.41, 1.41, or 1.41E-4).

| Unit No. | NOx | | CO | | VOC | | SOx | | TSP[2] | | PM10[2] | | PM2.5[2] | | $H_2S$ | | Lead | |
|---|---|---|---|---|---|---|---|---|---|---|---|---|---|---|---|---|---|---|
| | lb/hr | ton/yr | lb/hr | ton/yr | lb/hr | ton/yr | lb/hr | ton/yr | lb/hr | ton/yr | lb/hr | ton/yr | lb/hr | ton/yr | lb/hr | ton/yr | lb/hr | ton/yr |
| N/A | | | | | | | | | | | | | | | | | | |
| | | | | | | | | | | | | | | | | | | |
| | | | | | | | | | | | | | | | | | | |
| | | | | | | | | | | | | | | | | | | |
| | | | | | | | | | | | | | | | | | | |
| | | | | | | | | | | | | | | | | | | |
| | | | | | | | | | | | | | | | | | | |
| | | | | | | | | | | | | | | | | | | |
| **Totals** | | | | | | | | | | | | | | | | | | |

[1] **For instance**, if the short term steady-state Table 2-E emissions are 5 lb/hr and the SSM rate is 12 lb/hr, enter 7 lb/hr in this table. If the annual steady-state Table 2-E emissions are 21.9 TPY, and the number of scheduled SSM events result in annual emissions of 31.9 TPY, enter 10.0 TPY in the table below.

[1] **Condensable Particulate Matter:** Include condensable particulate matter emissions for PM10 and PM2.5 if the source is a combustion source. Do not include condensable particulate matter for TSP unless TSP is set equal to PM10 and PM2.5.



ED_004016Q_00001316-00019

# Table 2-H: Stack Exit Conditions

Unit and stack numbering must correspond throughout the application package. Include the stack exit conditions for each unit that emits from a stack, including blowdown venting parameters and tank emissions.

| Stack Number | Serving Unit Number(s) from Table 2-A | Orientation (H-Horizontal V=Vertical) | Rain Caps (Yes or No) | Height Above Ground (ft) | Temp. (F) | Flow Rate | | Moisture by Volume (%) | Velocity (ft/sec) | Inside Diameter (ft) |
|---|---|---|---|---|---|---|---|---|---|---|
| | | | | | | (acfs) | (dscfs) | | | |
| ENG-1 | ENG-1 | V | No | 21 | 840 | 62.3 | 44.9 | 9.3 | 115.1 | 0.83 |
| VRT 1-2 | VRT 1-2 | V | No | 30 | 70 | 0.00 | 0.00 | 0.00 | 0.00 | 0.67 |
| TK 1-15 | TK 1-15 | V | No | 20 | 70 | 0.00 | 0.00 | 0.00 | 0.00 | 0.67 |
| PWTK 1-2 | PWTK 1-2 | V | No | 20 | 70 | 0.00 | 0.00 | 0.00 | 0.00 | 0.67 |
| HT 1-4 | HT 1-4 | V | No | 15 | 550 | 8.8 | 5.9 | 15.4 | 11.2 | 1.0 |
| HT-5 | HT-5 | V | No | 15 | 550 | 12.3 | 8.3 | 15.4 | 37.6 | 0.65 |
| GEN 1-9 | GEN 1-9 | V | No | 10 | 588 | 24.1 | 18.1 | 5.4 | 69.0 | 0.67 |
| FL 1-2 | FL 1-2 | V | No | 20 | TBD | TBD | TBD | TBD | TBD | TBD |
| | | | | | | | | | | |



ED_004016Q_00001316-00020

# Table 2-I: Stack Exit and Fugitive Emission Rates for HAPs and TAPs

In the table below, report the Potential to Emit for each HAP from each regulated emission unit listed in Table 2-A, only if the entire facility emits the HAP at a rate greater than or equal to one (1) ton per year For each such emission unit, HAPs shall be reported to the nearest 0.1 tpy. Each facility-wide Individual HAP total and the facility-wide Total HAPs shall be the sum of all HAP sources calculated to the nearest 0.1 ton per year. Per 20.2.72.403.A.1 NMAC, facilities not exempt [see 20.2.72.402.C NMAC] from TAP permitting shall report each TAP that has an uncontrolled emission rate in excess of its pounds per hour screening level specified in 20.2.72.502 NMAC. TAPs shall be reported using one more significant figure than the number of significant figures shown in the pound per hour threshold corresponding to the substance. Use the HAP nomenclature as it appears in Section 112 (b) of the 1990 CAAA and the TAP nomenclature as it listed in 20.2.72.502 NMAC. Include tank-flashing emissions estimates of HAPs in this table. For each HAP or TAP listed, fill all cells in this table with the emission numbers or a "-" symbol. A "-" symbol indicates that emissions of this pollutant are not expected or the pollutant is emitted in a quantity less than the threshold amounts described above.

| Stack No. | Unit No.(s) | Total HAPs | | Formaldehyde ☑ HAP or ☐ TAP | | Provide Pollutant Name Here ☐ HAP or ☐TAP | | Provide Pollutant Name Here ☐ HAP or ☐TAP | | Provide Pollutant Name Here ☐ HAP or ☐TAP | | Provide Pollutant Name Here ☐ HAP or ☐TAP | | Provide Pollutant Name Here ☐ HAP or ☐TAP | | Provide Pollutant Name Here ☐ HAP or ☐TAP | | Provide Pollutant Name Here ☐ HAP or ☐TAP | |
|---|---|---|---|---|---|---|---|---|---|---|---|---|---|---|---|---|---|---|---|
| | | lb/hr | ton/yr | lb/hr | ton/yr | lb/hr | ton/yr | lb/hr | ton/yr | lb/hr | ton/yr | lb/hr | ton/yr | lb/hr | ton/yr | lb/hr | ton/yr | lb/hr | ton/yr |
| ENG-1[1] | ENG-1[1] | 0.87 | 3.8 | 0.39 | 1.71 | | | | | | | | | | | | | | |
| VRT 1-2 | VRT 1-2 | 0.04 | 0.19 | | | | | | | | | | | | | | | | |
| TK 1-15 | TK 1-15 | 0.01 | 0.06 | | | | | | | | | | | | | | | | |
| PWTK 1-2 | PWTK 1-2 | 0.00 | 0.00 | | | | | | | | | | | | | | | | |
| HT 1-4 | HT 1-4 | 0.01 | 0.04 | 0.00 | 0.00 | | | | | | | | | | | | | | |
| HT-5 | HT-5 | 0.00 | 0.01 | 0.00 | 0.00 | | | | | | | | | | | | | | |
| GEN-1[2] | GEN-1[2] | 0.52 | 2.3 | 0.04 | 0.19 | | | | | | | | | | | | | | |
| OILLOAD -1 | OILLOAD -1 | 0.25 | 1.1 | | | | | | | | | | | | | | | | |
| FUG-1 | FUG-1 | 0.30 | 1.3 | | | | | | | | | | | | | | | | |
| COMP-1[3] | COMP-1[3] | 0.04 | 0.18 | | | | | | | | | | | | | | | | |
| FL 1-2 | FL 1-2 | -- | -- | | | | | | | | | | | | | | | | |
| ROAD-1 | ROAD-1 | -- | -- | | | | | | | | | | | | | | | | |
| **Totals:** | | 2.0 | 9.0 | 0.44 | 1.9 | | | | | | | | | | | | | | |

[1] - Composite emissions represent the worst case compressor engine emissions. (ENG 1-5)

[2] - Composite emissions represent the worst case generator emissions. (GEN 1-9 OR GEN 10-12)

[3] - Composite emissions represent the worst case compressor emissions. (COMP 1-5)

Emissions are based on emission calculation spreadsheet.



ED_004016Q_00001316-00021

# Table 2-J: Fuel

Specify fuel characteristics and usage. Unit and stack numbering must correspond throughout the application package.

| Unit No. | Fuel Type (low sulfur Diesel, ultra low sulfur diesel, Natural Gas, Coal, ...) | Fuel Source: purchased commercial, pipeline quality natural gas, residue gas, raw/field natural gas, process gas (e.g. SRU tail gas) or other | Specify Units | | | | |
|---|---|---|---|---|---|---|---|
| | | | Lower Heating Value | Hourly Usage | Annual Usage | % Sulfur | % Ash |
| ENG-1 | Natural Gas (total) | Raw/Field Natural Gas | 1020 Btu/scf | 5,083 | 44,523,954 | N/A | N/A |
| HT 1-4 | Natural Gas (total) | Raw/Field Natural Gas | 1020 Btu/scf | 4,902 | 42,941,176 | N/A | N/A |
| HT-5 | Natural Gas (total) | Raw/Field Natural Gas | 1020 Btu/scf | 686 | 6,011,765 | N/A | N/A |
| GEN 1-9 | Natural Gas (total) | Raw/Field Natural Gas | 1020 Btu/scf | 7,429 | 65,081,647 | N/A | N/A |
| FL 1-2 | Natural Gas (total) | Raw/Field Natural Gas | 1020 Btu/scf | 196 | 1,717,647 | N/A | N/A |
| | | | | | | | |
| | | | | | | | |
| | | | | | | | |
| | | | | | | | |



ED_004016Q_00001316-00022

# Table 2-K: Liquid Data for Tanks Listed in Table 2-L

For each tank, list the liquid(s) to be stored in each tank. If it is expected that a tank may store a variety of hydrocarbon liquids, enter "mixed hydrocarbons" in the Composition column for that tank and enter the corresponding data of the most volatile liquid to be stored in the tank. If tank is to be used for storage of different materials, list all the materials in the "All Calculations" attachment, run the newest version of TANKS on each, and use the material with the highest emission rate to determine maximum uncontrolled and requested allowable emissions rate. The permit will specify the most volatile category of liquids that may be stored in each tank. Include appropriate tank-flashing modeling input data. Use additional sheets if necessary. Unit and stack numbering must correspond throughout the application package.

| Tank No. | SCC Code | Material Name | Composition | Liquid Density (lb/gal) | Vapor Molecular Weight (lb/lb*mol) | Average Storage Conditions | | Max Storage Conditions | |
|---|---|---|---|---|---|---|---|---|---|
| | | | | | | Temperature (°F) | True Vapor Pressure (psia) | Temperature (°F) | True Vapor Pressure (psia) |
| VRT-1 | 40400312 | Oil | Water / Mixed Hydrocarbons | 7.1 | 40.0 | 63.1 | 3.1 | 56.0 | 3.9 |
| VRT-2 | 40400312 | Oil | Water / Mixed Hydrocarbons | 7.1 | 40.0 | 63.1 | 3.1 | 56.0 | 3.9 |
| TK-1 | 40400301 / 40400302 | Oil | Mixed Hydrocarbons | 7.1 | 50.0 | 78.1 | 4.1 | 90.3 | 5.0 |
| TK-2 | 40400301 / 40400302 | Oil | Mixed Hydrocarbons | 7.1 | 50.0 | 78.1 | 4.1 | 90.3 | 5.0 |
| TK-3 | 40400301 / 40400302 | Oil | Mixed Hydrocarbons | 7.1 | 50.0 | 78.1 | 4.1 | 90.3 | 5.0 |
| TK-4 | 40400301 / 40400302 | Oil | Mixed Hydrocarbons | 7.1 | 50.0 | 78.1 | 4.1 | 90.3 | 5.0 |
| TK-5 | 40400301 / 40400302 | Oil | Mixed Hydrocarbons | 7.1 | 50.0 | 78.1 | 4.1 | 90.3 | 5.0 |
| TK-6 | 40400301 / 40400302 | Oil | Mixed Hydrocarbons | 7.1 | 50.0 | 78.1 | 4.1 | 90.3 | 5.0 |
| TK-7 | 40400301 / 40400302 | Oil | Mixed Hydrocarbons | 7.1 | 50.0 | 78.1 | 4.1 | 90.3 | 5.0 |
| TK-8 | 40400301 / 40400302 | Oil | Mixed Hydrocarbons | 7.1 | 50.0 | 78.1 | 4.1 | 90.3 | 5.0 |
| TK-9 | 40400301 / 40400302 | Oil | Mixed Hydrocarbons | 7.1 | 50.0 | 78.1 | 4.1 | 90.3 | 5.0 |
| TK-10 | 40400301 / 40400302 | Oil | Mixed Hydrocarbons | 7.1 | 50.0 | 78.1 | 4.1 | 90.3 | 5.0 |
| TK-11 | 40400301 / 40400302 | Oil | Mixed Hydrocarbons | 7.1 | 50.0 | 78.1 | 4.1 | 90.3 | 5.0 |
| TK-12 | 40400301 / 40400302 | Oil | Mixed Hydrocarbons | 7.1 | 50.0 | 78.1 | 4.1 | 90.3 | 5.0 |
| TK-13 | 40400301 / 40400302 | Oil | Mixed Hydrocarbons | 7.1 | 50.0 | 78.1 | 4.1 | 90.3 | 5.0 |
| TK-14 | 40400301 / 40400302 | Oil | Mixed Hydrocarbons | 7.1 | 50.0 | 78.1 | 4.1 | 90.3 | 5.0 |
| TK-15 | 40400301 / 40400302 | Oil | Mixed Hydrocarbons | 7.1 | 50.0 | 78.1 | 4.1 | 90.3 | 5.0 |
| PWTK-1 | 40400301 / 40400302 | Produced Water | Water / Mixed Hydrocarbons | 8.3 | 19.2 | 78.1 | 0.49 | 90.3 | 0.72 |
| PWTK-2 | 40400301 / 40400302 | Produced Water | Water / Mixed Hydrocarbons | 8.3 | 19.2 | 78.1 | 0.49 | 90.3 | 0.72 |
| | | | | | | | | | |
| | | | | | | | | | |
| | | | | | | | | | |
| | | | | | | | | | |



ED_004016Q_00001316-00023

# Table 2-L: Tank Data

Include appropriate tank-flashing modeling input data. Use an addendum to this table for unlisted data categories. Unit and stack numbering must correspond throughout the application package. Use additional sheets if necessary. See reference Table 2-L2. Note: 1.00 bbl = 10.159 M3 = 42.0 gal

| Tank No. | Date Installed | Materials Stored | Seal Type (refer to Table 2-LR below) | Roof Type (refer to Table 2-LR below) | Capacity | | Diameter (M) | Vapor Space (M) | Color (from Table VI-C) | | Paint Condition (from Table VI-C) | Annual Throughput (gal/yr) | Turn-overs (per year) |
|---|---|---|---|---|---|---|---|---|---|---|---|---|---|
| | | | | | (bbl) | ($M^3$) | | | Roof | Shell | | | |
| VRT-1 | TBD | Oil | N/A | FX | 750 | 119 | 4.1 | 1.5 | OT (Green) | OT (Green) | Good | 29,127,000 | 925 |
| VRT-2 | TBD | Oil | N/A | FX | 750 | 119 | 4.1 | 1.5 | OT (Green) | OT (Green) | Good | 29,127,000 | 925 |
| TK-1 | TBD | Oil | N/A | FX | 500 | 79 | 4.1 | 3.0 | OT (Green) | OT (Green) | Good | 3,883,600 | 185 |
| TK-2 | TBD | Oil | N/A | FX | 500 | 79 | 4.1 | 3.0 | OT (Green) | OT (Green) | Good | 3,883,600 | 185 |
| TK-3 | TBD | Oil | N/A | FX | 500 | 79 | 4.1 | 3.0 | OT (Green) | OT (Green) | Good | 3,883,600 | 185 |
| TK-4 | TBD | Oil | N/A | FX | 500 | 79 | 4.1 | 3.0 | OT (Green) | OT (Green) | Good | 3,883,600 | 185 |
| TK-5 | TBD | Oil | N/A | FX | 500 | 79 | 4.1 | 3.0 | OT (Green) | OT (Green) | Good | 3,883,600 | 185 |
| TK-6 | TBD | Oil | N/A | FX | 500 | 79 | 4.1 | 3.0 | OT (Green) | OT (Green) | Good | 3,883,600 | 185 |
| TK-7 | TBD | Oil | N/A | FX | 500 | 79 | 4.1 | 3.0 | OT (Green) | OT (Green) | Good | 3,883,600 | 185 |
| TK-8 | TBD | Oil | N/A | FX | 500 | 79 | 4.1 | 3.0 | OT (Green) | OT (Green) | Good | 3,883,600 | 185 |
| TK-9 | TBD | Oil | N/A | FX | 500 | 79 | 4.1 | 3.0 | OT (Green) | OT (Green) | Good | 3,883,600 | 185 |
| TK-10 | TBD | Oil | N/A | FX | 500 | 79 | 4.1 | 3.0 | OT (Green) | OT (Green) | Good | 3,883,600 | 185 |
| TK-11 | TBD | Oil | N/A | FX | 500 | 79 | 4.1 | 3.0 | OT (Green) | OT (Green) | Good | 3,883,600 | 185 |
| TK-12 | TBD | Oil | N/A | FX | 500 | 79 | 4.1 | 3.0 | OT (Green) | OT (Green) | Good | 3,883,600 | 185 |
| TK-13 | TBD | Oil | N/A | FX | 500 | 79 | 4.1 | 3.0 | OT (Green) | OT (Green) | Good | 3,883,600 | 185 |
| TK-14 | TBD | Oil | N/A | FX | 500 | 79 | 4.1 | 3.0 | OT (Green) | OT (Green) | Good | 3,883,600 | 185 |
| TK-15 | TBD | Oil | N/A | FX | 500 | 79 | 4.1 | 3.0 | OT (Green) | OT (Green) | Good | 3,883,600 | 185 |
| PWTK-1 | TBD | Produced Water | N/A | FX | 500 | 79 | 4.1 | 3.0 | OT (Green) | OT (Green) | Good | 15,330,000 | 730 |
| PWTK-2 | TBD | Produced Water | N/A | FX | 500 | 79 | 4.1 | 3.0 | OT (Green) | OT (Green) | Good | 15,330,000 | 730 |
| | | | | | | | | | | | | | |
| | | | | | | | | | | | | | |



ED_004016Q_00001316-00024

## Table 2-L2: Liquid Storage Tank Data Codes Reference Table

| Roof Type | Seal Type, Welded Tank Seal Type | | Seal Type, Riveted Tank Seal Type | | Roof, Shell Color | Paint Condition |
|---|---|---|---|---|---|---|
| **FX**: Fixed Roof | **Mechanical Shoe Seal** | **Liquid-mounted resilient seal** | **Vapor-mounted resilient seal** | **Seal Type** | **WH**: White | Good |
| **IF**: Internal Floating Roof | **A**: Primary only | **A**: Primary only | **A**: Primary only | **A**: Mechanical shoe, primary only | **AS**: Aluminum (specular) | Poor |
| **EF**: External Floating Roof | **B**: Shoe-mounted secondary | **B**: Weather shield | **B**: Weather shield | **B**: Shoe-mounted secondary | **AD**: Aluminum (diffuse) | |
| **P**: Pressure | **C**: Rim-mounted secondary | **C**: Rim-mounted secondary | **C**: Rim-mounted secondary | **C**: Rim-mounted secondary | **LG**: Light Gray | |
| | | | | | **MG**: Medium Gray | |
| | | | | | **BL**: Black | |
| | | | | | **OT**: Other (specify) | |

Note: 1.00 bbl = 0.159 $M^3$ = 42.0 gal

## Table 2-M: Materials Processed and Produced (Use additional sheets as necessary.)

| Material Processed | | | | Material Produced | | | |
|---|---|---|---|---|---|---|---|
| **Description** | **Chemical Composition** | **Phase (Gas, Liquid, or Solid)** | **Quantity (specify units)** | **Description** | **Chemical Composition** | **Phase** | **Quantity (specify units)** |
| Oil | Mixed Hydrocarbons | Liquid | 1,350,500 bbl/yr | Oil | Mixed Hydrocarbons | Liquid | 1,387,000 bbl/yr |
| Produced Water | Mixed Hydrocarbons | Liquid | 730,000 bbl/yr | Produced Water | Mixed Hydrocarbons | Liquid | 730,000 bbl/yr |
| Gas | Mixed Hydrocarbons | Gas | 4,000,000 scf/day | Gas | Mixed Hydrocarbons | Gas | 4,000,000 scf/day |
| | | | | | | | |
| | | | | | | | |
| | | | | | | | |
| | | | | | | | |



ED_004016Q_00001316-00025

# Table 2-P: Greenhouse Gas Emissions

Applications submitted under 20.2.70, 20.2.72, & 20.2.74 NMAC are required to complete this Table. Power plants, Title V major sources, and PSD major sources must report and calculate all GHG emissions for each unit. Applicants must report potential emission rates in short tons per year (see Section 6.a for assistance). Include GHG emissions during Startup, Shutdown, and Scheduled Maintenance in this table. For minor source facilities that are not power plants, are not Title V, or are not PSD, there are three options for reporting GHGs 1) report GHGs for each individual piece of equipment; 2) report all GHGs from a group of unit types, for example report all combustion source GHGs as a single unit and all venting GHG as a second separate unit; OR 3) check the following box ☐ By cl

| | | $CO_2$ ton/yr | $N_2O$ ton/yr | $CH_4$ ton/yr | $SF_6$ ton/yr | PFC/HFC ton/yr[2] | | | | | | | | | Total GHG Mass Basis ton/yr[4] | Total $CO_2e$ ton/yr[5] |
|---|---|---|---|---|---|---|---|---|---|---|---|---|---|---|---|---|
| **Unit No.** | **GWPs [1]** | **1** | **298** | **25** | **22,800** | **footnote 3** | | | | | | | | | | |
| **N/A** | **mass GHG** | | | | | | | | | | | | | | | |
| | **$CO_2e$** | | | | | | | | | | | | | | | |
| | **mass GHG** | | | | | | | | | | | | | | | |
| | **$CO_2e$** | | | | | | | | | | | | | | | |
| | **mass GHG** | | | | | | | | | | | | | | | |
| | **$CO_2e$** | | | | | | | | | | | | | | | |
| | **mass GHG** | | | | | | | | | | | | | | | |
| | **$CO_2e$** | | | | | | | | | | | | | | | |
| | **mass GHG** | | | | | | | | | | | | | | | |
| | **$CO_2e$** | | | | | | | | | | | | | | | |
| | **mass GHG** | | | | | | | | | | | | | | | |
| | **$CO_2e$** | | | | | | | | | | | | | | | |
| | **mass GHG** | | | | | | | | | | | | | | | |
| | **$CO_2e$** | | | | | | | | | | | | | | | |
| | **mass GHG** | | | | | | | | | | | | | | | |
| | **$CO_2e$** | | | | | | | | | | | | | | | |
| | **mass GHG** | | | | | | | | | | | | | | | |
| | **$CO_2e$** | | | | | | | | | | | | | | | |
| | **mass GHG** | | | | | | | | | | | | | | | |
| | **$CO_2e$** | | | | | | | | | | | | | | | |
| | **mass GHG** | | | | | | | | | | | | | | | |
| | **$CO_2e$** | | | | | | | | | | | | | | | |
| | **mass GHG** | | | | | | | | | | | | | | | |
| | **CO2e** | | | | | | | | | | | | | | | |
| **Total** | **mass GHG** | | | | | | | | | | | | | | | |
| | **$CO_2e$** | | | | | | | | | | | | | | | |

[1] **GWP** (Global Warming Potential): Applicants must use the most current GWPs codified in Table A-1 of 40 CFR part 98. GWPs are subject to change, therefore, applicants need to check 40 CFR 98 to confirm GWP values.

[2] For **HFCs** or **PFCs** describe the specific HFC or PFC compound and use a separate column for each individual compound.

[3] For each new compound, enter the appropriate GWP for each HFC or PFC compound from Table A-1 in 40 CFR 98.

[4] Green house gas emissions on a **mass basis** is the ton per year green house gas emission before adjustment with its GWP.

[5] **$CO_2e$** means Carbon Dioxide Equivalent and is calculated by multiplying the TPY mass emissions of the green house gas by its GWP.



ED_004016Q_00001316-00026

# Section 3

## Application Summary and Routine Operations

The **Application Summary** shall include a brief description of the facility and its process. If this facility is to be collocated with another facility, provide details of the other facility including permit or NOI number(s). In case of a revision or modification to a facility, please describe the proposed changes from the original NOI. If equipment is being removed as part of this application, identify this equipment on Table 2A.

**Routine or predictable emissions during Startup, Shutdown, and Maintenance (SSM):** Provide an overview of how SSM emissions are accounted for in this application. Refer to "Guidance for Submittal of Startup, Shutdown, Maintenance Emissions in Permit Applications (http://www.env.nm.gov/aqb/permit/app_form.html) for more detailed instructions on SSM emissions.

**Written description of the routine operations of the facility:** Include a description of how each piece of equipment will be operated, how controls will be used, and the fate of both the products and waste generated.

**Facility Information Check Off List and Required Supporting Information:** Fill out this entire section and indicate what supporting information is included in the application.

**If any of the following information is submitted incomplete, the Department shall rule the NOI application incomplete until all required information is submitted.**

**Application Summary:**

This application and accompanying material is a Notice of Intent (NOI) for the W. Escavada UT #305/306 well site located near Counselor, New Mexico. The facility is located on an off-reservation individual Indian allotted land held in trust by the U.S. government for individual tribal members, and not a particular Indian tribe. Therefore, the facility is located on non-reservation allotted land over which neither a particular Indian tribe nor EPA has demonstrated inherent or statutorily delegated jurisdiction. The well site is owned and operated by WPX Energy Production, LLC. It is estimated to produce 3,800 bbl/day of oil from eight on site wells.

The facility will consist of one of the compressor engine options listed in Table 3-1.

**Table 3-1: Compressor Engine Options**

| Option No. | Unit Name | Make & Model | Fuel Type |
|---|---|---|---|
| 1 | ENG-1 | Caterpillar G3508B | Natural Gas |
| | | | Propane |
| 2 | ENG-2 | Caterpillar G-3306TAA | Natural Gas |
| | | | Propane |
| 3 | ENG-3 | Caterpillar CG137-8 | Natural Gas |
| | | | Propane |
| 4 | ENG-4 | Cummins QSL9G | Natural Gas |
| | | | Propane |
| 5 | ENG-5 | Cummins G8.3C118 | Natural Gas |
| | | | Propane |

These engines can use either natural gas or propane as fuel. The engine option set with the worst case emissions is included in the total facility emissions.

The facility will also consist of: two vapor recovery tanks, fifteen oil tanks, two produced water tanks, four separator heaters, one fuel gas separator heater, either nine smaller generators or three larger generators, two emergency flares, and up to three electric vapor recovery units (VRU's) for product recovery. The three VRUs will be capable of working in parallel so in the



ED_004016Q_00001316-00027

event one of the VRUs goes down or is not operational, the vapors will be directed to the other VRUs for product recovery. Additionally, please reference the cover letter to this application for the site-specific process vs. control determination for the VRU and the Texas Commission on Environmental Quality (TCEQ) guidance document for the basis of the VRU capture efficiency.

Two emergency flares are included in the application because the volume of gas needing to be combusted during an emergency event is unknown. Depending on the age of the well(s), the number of wells on the pad, and the capacity the flare(s), more than one combustion device may be necessary. Examples of emergency events include: when the gathering company has a pipeline issue, such as if a compressor station suddenly goes down, and if the gas suddenly does not meet the pipeline quality specifications and is rejected by the gathering company. In the latter case, it is possible that the gas will have a sudden nitrogen increase due to a nearby frac and will not be accepted by the gathering company until the nitrogen decreases.

These events are not malfunctions as defined in 20.2.7.7.E NMAC but rather emergencies per 20.2.7.113 NMAC. It is not possible to estimate the number of occurrences of such emergencies as they are "sudden and reasonably unforeseeable events beyond the control of the permittee" by nature. However, if notified by a gas gathering company that a planned pipeline maintenance event was to occur, the operational protocol for the subject facility includes shutting the well(s) in for the duration of the planned maintenance event.

The estimated total facility emissions are below 10 lb/hr and 25 tpy for any regulated air pollutant for which there is a New Mexico or National Ambient Air Quality Standard. Therefore, the facility qualifies for an NOI pursuant to 20.2.73 NMAC.

**SSM Summary:**

SSM emissions are not anticipated to exceed the emission estimates in this application. Engines at this site will start up at no load with a rich mixture, so emissions will be minimal. During shutdown, emissions will be minimal since the fuel and air flow to these engines ceases within seconds of a shutdown. Heaters startup with less fuel input than during steady state so these emissions will be lower. During shutdown, lesser volumes are being sent to the heaters; therefore, $NO_X$ emissions will be lower than at steady state. The tank heaters are electric, therefore there will not be any emissions from these sources. Under steady state conditions, VOC emissions from the tanks are captured by a VRU, a product recovery device, and sent to the sales line. In emergency situations, up to two temporary, portable emergency flares will be used to control tank emissions and/or wellhead gas.

**Description of Routine Operations:**

W. Escavada UT #305/306 is an oil well site that operates 24 hours a day, 7 days a week. The facility separates oil, natural gas, and water from eight on site wells using three-phase separators. From the wellhead(s), the three-phase heated separators (HT 1-4) divert oil and produced water to two vapor recovery tanks (VRT 1-2). After flashing, post-flash produced water is diverted to one of two 500 bbl produced water tanks (PWTK 1-2), and post-flash oil is sent to one of fifteen 500 bbl oil tanks (TK 1-15), from which it is loaded into trucks for transfer off site (OILLOAD-1), and the gas to one heated fuel gas separator (HT-5) or to the compressors (COMP 1-5) driven by the compressor engines (ENG 1-5) for entry into the sales line.

One of five compressor engine options from Table 3-1 will be placed onsite, and each engine will drive a permanent, three-stage reciprocating compressor (COMP 1-5). The compressor engines will be controlled according to requirements specified in NSPS 40 CFR 60 Subpart JJJJ and have been de-rated based on its elevation according to the *AQB 02.002-00 Turbine/Reciprocating Engine Derating* guidance document.

The vapors from the vapor recovery tanks are manifolded to three vapor recovery units (VRU 1-3) as product recovery devices to send the tank vapors into the gas sales line. The vapors from the oil tanks and produced water tanks are manifolded to one vapor recovery unit (VRU-1) as a product recovery device to send the tank vapors into the gas sales line. The facility also includes: either nine 87 hp generators (GEN 1-9) or three 269 hp generators (GEN 10-12). Two emergency flares (FL 1-2) will be placed on site. Fugitive emissions occur from piping and other components (FUG-1). Road dust emissions occur from daily routine traffic to the well site (ROAD-1).



ED_004016Q_00001316-00028

**Application Details:**

**Engines:** For each engine, identify the source of the emission factor and provide the requested documentation.

Engine emissions are calculated on an uncontrolled basis using the following emission factors (EFs):

☒ Manufacturer Specifications (Include a copy of each spec sheet in Section 7 with EFs highlighted)
☒ EPA AP-42 Emission Factors (Include a copy of each Table in Section 7 with EFs highlighted)

Engine(s) at this facility are subject to the following Federal Regulation and emissions are based on the emission standards in the following Federal Rule.

☐ Engine(s) are subject to NSPS IIII (Include a copy of the applicability table from the regulation in Section 7 with emission standards highlighted and a low level citation of the applicable parts of the regulation in Section 8)
☒ Engine(s) are subject to NSPS JJJJ (Include a copy of the applicability table from the regulation in Section 7 with emission standards highlighted and a low level citation of the applicable parts of the regulation in Section 8)
☐ Engine(s) are subject to NESHAP ZZZZ (Include a copy of the applicability table from the regulation in Section 7 with emission standards or requirements highlighted and a low level citation of the applicable parts of the regulation in Section 8)

**Vapor Recovery Tower, Ultra Low Pressure Separator, Flash Tower Located Upstream of Storage Vessels:** If the facility contains one of the following units located upstream of the storage vessels and is used to flash and capture flashing emissions, check the appropriate box and provide a process vs control determination in accordance with US EPA Guidance.

☐ Vapor Recovery Tower and VRU Compressor
☐ ULPS and VRU Compressor
☐ Flash Tower and VRU Compressor
☐ The complete process vs control determination for this unit prepared in accordance with EPA Guidance is included in Section 6.

**Vapor Recovery Unit (VRU) attached to Storage Vessels:** Check the box below if this facility is using a VRU to reduce storage vessel emissions to limit the PTE to below NSPS OOOO or NSPS OOOOa applicability thresholds:

☐ VRU controlling Storage Vessel emissions and the facility is subject to the requirements under 60.5411(b) and (c)
☒ VRU controlling Storage Vessel emissions and the facility is subject to the following requirements:
(i) You meet the cover requirements specified in §60.5411a(b).
(ii) You meet the closed vent system requirements specified in §60.5411a(c) and (d).
(iii) You must maintain records that document compliance with paragraphs (e)(3)(i) and (ii) of this section.
(iv) In the event of removal of apparatus that recovers and routes vapor to a process, or operation that is inconsistent with the conditions specified in paragraphs (e)(3)(i) and (ii) of this section, you must determine the storage vessel's potential for VOC emissions according to this section within 30 days of such removal or operation.

**Flaring Scenarios:** Read through the possible scenarios below and check the box next to the facility operating scenario. Flares shall assume a destruction efficiency of 95%, unless the facility is subject to requirements for flares under 40 CFR 60.18 or a higher destruction efficiency (up to 98%) is supported by a manufacturer specification sheet for that unit.

☐ The flare controls storage vessels in accordance with 40 CFR 60, Subpart OOOO or OOOOa
☒ The facility has a flare which operates only during maintenance events, such as VRU downtime (because flaring maintenance emissions is not federally enforceable, the emissions during maintenance must be represented as both controlled and uncontrolled
☐ The emissions during VRU downtime are represented as uncontrolled VOC emissions from the compressor
☐ The combustion emissions during VRU downtime are represented as controlled emissions from the flare



ED_004016Q_00001316-00029

# Section 4

## Process Flow Sheet

---

A **process flow sheet** indicating all individual equipment, all emission points, and types of control applied to those points. All units should be labeled and the unit numbering system should be consistent throughout this application. Identify all sources of emissions with a vertical arrow. Label each of the different material streams (crude oil, gas, water) using the legend below. See example of a process flow sheet here:
https://www.env.nm.gov/aqb/permit/Permit_Apps/AirQualityPermitNOIApplication.html

**Written description of the routine operations of the facility:** Include a detailed description of how each piece of equipment will be operated, how controls will be used, and the fate of both the products and waste generated. See example of a written description of routine operations here:
https://www.env.nm.gov/aqb/permit/Permit_Apps/AirQualityPermitNOIApplication.html

---

A process flow sheet is provided on the following page.



ED_004016Q_00001316-00030

| Emission Unit (EU) | Description |
|---|---|
| ENG 1-5 | Compressor Engine |
| VRT 1-2 | Vapor Recovery Process Tanks |
| TK 1-15 | Post-Flash Oil Tanks |
| PWTK 1-2 | Post-Flash Produced Water (PW) Tanks |
| HT 1-4 | Separator Heaters |
| HT-5 | Fuel Gas Separator Heater |
| GEN 1-12 | Generators |
| OILLOAD-1 | Truck Loading (Oil Loadout) |
| FUG-1 | Equipment Leaks (Fugitives) |
| COMP 1-5 | Reciprocating Compressor(s) |
| FL 1-2 | Emergency Flares |
| ROAD-1 | Road Dust |
| VRU 1-3 | Vapor Recovery Units |

**Process Flow Diagram**
W. Escavada UT #305/306
WPX Energy Production, LLC
Last Update: 12/8/2017

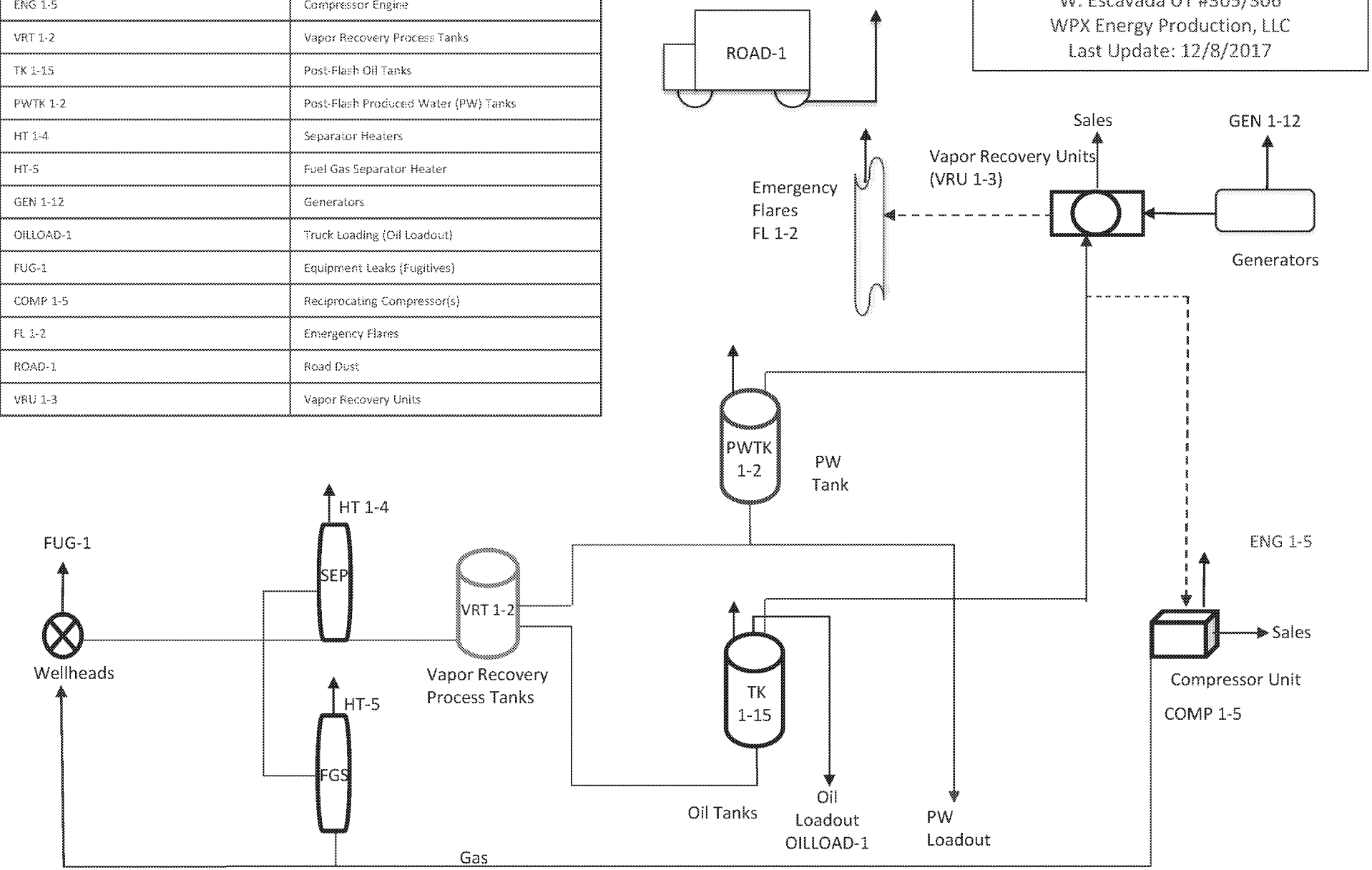


WPXENERGY

# Section 5

## All Calculations

---

**The Department has developed Equipment Forms which are required to be used in the NOI Oil and Gas Production Application.** Forms for engines, heaters, turbines, flares, roads, enclosed combustion devices have been developed and should be submitted as part of this application. The forms for tank emissions are under development and will be posted when completed.

**The equipment forms can be accessed at the following link:**
https://www.env.nm.gov/aqb/permit/Permit_Apps/AirQualityPermitNOIApplication.html

**In addition to the Department's Equipment Forms, applicants may submit calculations on their own forms. If submitting additional calculations, include these calculations in an Appendix to the application. Show all calculations** used to determine both the hourly and annual controlled and uncontrolled emission rates. All calculations shall be performed keeping a minimum of three significant figures. Document the source of each emission factor used (if an emission rate is carried forward and not revised, then a statement to that effect is required). If identical units are being permitted and will be subject to the same operating conditions, submit calculations for only one unit and a note specifying what other units to which the calculations apply. All formulas and calculations used to calculate emissions must be submitted. The "Calculations" tab has been provided to allow calculations to be linked to the emissions tables. Add additional "Calc" tabs as needed. If the Section 2 or other spread sheets are used, all calculation spread sheet(s) shall be submitted electronically in Microsoft Excel compatible format so that formulas and input values can be checked. Format all spread sheets and calculations such that the reviewer can follow the logic and verify the input values. Define all variables. If calculation spread sheets are not used, provide the original formulas with defined variables. Additionally, provide subsequent formulas showing the input values for each variable in the formula. All calculations, including those calculations are imbedded in the Calc tab of Section 2 portion of the application, the printed Calc tab(s), should be submitted under this section.

**Tank Emissions Calculations**: The information provided to the AQB shall include a discussion of the method used to estimate tank-flashing emissions, accuracy of the model, the input and output summary from simulation models and software, all calculations, documentation of any assumptions used, descriptions of sampling methods and conditions, copies of any lab sample analysis. If Pro-Max or Hysis is used, all relevant input parameters shall be reported, including separator pressure, gas throughput, and all other relevant parameters necessary for flashing calculation. Highlight the parameters on the input and output summary that were used to calculate the emissions reported in Table 2D and 2E (see example of input and output summary here: https://www.env.nm.gov/aqb/permit/Permit_Apps/AirQualityPermitNOIApplication.html). For each crude oil storage tank, identify if the tanks are in series or in parallel.

**SSM Calculations**: It is the applicant's responsibility to provide an estimate of SSM emissions or to provide justification for not doing so. In this Section, provide emissions calculations for Startup, Shutdown, and Routine Maintenance (SSM) emissions listed in the Section 2 SSM Tables and the rational for why the others are reported as zero (or left blank in the SSM/GHG Tables). Refer to "Guidance for Submittal of Startup, Shutdown, Maintenance Emissions in Permit Applications (http://www.env.nm.gov/aqb/permit/app_form.html) for more detailed instructions on calculating SSM emissions.

**Road Calculations:** Calculate fugitive particulate emissions and enter haul road fugitives in Tables 2-A, 2-D and 2-E for:

1. If you transport raw material, process material and/or product into or out of or within the facility and have PER emissions greater than 0.5 tpy.
2. If you transport raw material, process material and/or product into or out of the facility more frequently than one round trip per day.

**Significant Figures:**
**A.** All emissions standards are deemed to have at least two significant figures, but not more than three significant figures.
**B.** At least 5 significant figures shall be retained in all intermediate calculations.
**C.** In calculating emissions to determine compliance with an emission standard, the following rounding off procedures shall be used:

**(1)** If the first digit to be discarded is less than the number 5, the last digit retained shall not be changed;
**(2)** If the first digit discarded is greater than the number 5, or if it is the number 5 followed by at least one digit other than the number zero, the last figure retained shall be increased by one unit; **and**



ED_004016Q_00001316-00032

**(3)** If the first digit discarded is exactly the number 5, followed only by zeros, the last digit retained shall be rounded upward if it is an odd number, but no adjustment shall be made if it is an even number.
**(4)** The final result of the calculation shall be expressed in the units of the standard.

**Control Devices:** In accordance with 20.2.73.200.B(7) NMAC, the permittee shall report all control devices and list each pollutant controlled by the control device regardless if the applicant takes credit for the reduction in emissions. The applicant can indicate in this section of the application if they chose to not take credit for the reduction in emission rates. Only uncontrolled emission rates can be considered to determine applicability unless the state or federal Acts require the control. This information is necessary to determine if federally enforceable conditions are necessary for the control device, and/or if the control device produces its own regulated pollutants or increases emission rates of other pollutants.

---

**Equipment Forms Submitted in this Section:**

| Check box if present | Quantity | Equipment Type |
|---|---|---|
| ☒ | 5 | Compressor Engine(s) |
| ☒ | N/A | Haul Road |
| ☒ | N/A | Fugitive Emissions |
| ☒ | 5 | Heaters(s) |
| ☒ | N/A | Loading |
| ☒ | 12 | Generators |
| ☒ | 15 | Oil Tanks |
| ☒ | 2 | Produced Water Tank |
| ☒ | 2 | Flare(s) |



ED_004016Q_00001316-00033

## Summary of Air Emission Units (ton/yr)

| Unit Name | Unit Description | Qty | Potential Emissions (tons/year) Uncontrolled + No Product Recovered | | | | | | Potential Emissions (tons/year) Controlled + Product Recovery | | | | | | |
|---|---|---|---|---|---|---|---|---|---|---|---|---|---|---|---|
| | | | NOx | CO | VOC | SO2 | PM10 | HAPs | NOx | CO | VOC | SO2 | PM10 | HAPs | CO2e |
| ENG-1* | Worst-Case Composite Engine Emissions | N/A | 51.4 | 61.9 | 26.1 | 0.09 | 1.24 | 3.80 | 8.66 | 17.1 | 4.27 | 0.09 | 1.24 | 3.80 | 3126 |
| VRT-1 | Vapor Recovery Tank | 1 of 2 | -- | -- | 728.6 | -- | -- | 11.8 | -- | -- | 5.83 | -- | -- | 0.09 | 225 |
| VRT-2 | Vapor Recovery Tank | 2 of 2 | -- | -- | 728.6 | -- | -- | 11.8 | -- | -- | 5.83 | -- | -- | 0.09 | 225 |
| TK-1 | Post-Flash Oil Tank | 1 of 15 | -- | -- | 3.05 | -- | -- | 0.08 | -- | -- | 0.15 | -- | -- | 0.00 | 1 |
| TK-2 | Post-Flash Oil Tank | 2 of 15 | -- | -- | 3.05 | -- | -- | 0.08 | -- | -- | 0.15 | -- | -- | 0.00 | 1 |
| TK-3 | Post-Flash Oil Tank | 3 of 15 | -- | -- | 3.05 | -- | -- | 0.08 | -- | -- | 0.15 | -- | -- | 0.00 | 1 |
| TK-4 | Post-Flash Oil Tank | 4 of 15 | -- | -- | 3.05 | -- | -- | 0.08 | -- | -- | 0.15 | -- | -- | 0.00 | 1 |
| TK-5 | Post-Flash Oil Tank | 5 of 15 | -- | -- | 3.05 | -- | -- | 0.08 | -- | -- | 0.15 | -- | -- | 0.00 | 1 |
| TK-6 | Post-Flash Oil Tank | 6 of 15 | -- | -- | 3.05 | -- | -- | 0.08 | -- | -- | 0.15 | -- | -- | 0.00 | 1 |
| TK-7 | Post-Flash Oil Tank | 7 of 15 | -- | -- | 3.05 | -- | -- | 0.08 | -- | -- | 0.15 | -- | -- | 0.00 | 1 |
| TK-8 | Post-Flash Oil Tank | 8 of 15 | -- | -- | 3.05 | -- | -- | 0.08 | -- | -- | 0.15 | -- | -- | 0.00 | 1 |
| TK-9 | Post-Flash Oil Tank | 9 of 15 | -- | -- | 3.05 | -- | -- | 0.08 | -- | -- | 0.15 | -- | -- | 0.00 | 1 |
| TK-10 | Post-Flash Oil Tank | 10 of 15 | -- | -- | 3.05 | -- | -- | 0.08 | -- | -- | 0.15 | -- | -- | 0.00 | 1 |
| TK-11 | Post-Flash Oil Tank | 11 of 15 | -- | -- | 3.05 | -- | -- | 0.08 | -- | -- | 0.15 | -- | -- | 0.00 | 1 |
| TK-12 | Post-Flash Oil Tank | 12 of 15 | -- | -- | 3.05 | -- | -- | 0.08 | -- | -- | 0.15 | -- | -- | 0.00 | 1 |
| TK-13 | Post-Flash Oil Tank | 13 of 15 | -- | -- | 3.05 | -- | -- | 0.08 | -- | -- | 0.15 | -- | -- | 0.00 | 1 |
| TK-14 | Post-Flash Oil Tank | 14 of 15 | -- | -- | 3.05 | -- | -- | 0.08 | -- | -- | 0.15 | -- | -- | 0.00 | 1 |
| TK-15 | Post-Flash Oil Tank | 15 of 15 | -- | -- | 3.05 | -- | -- | 0.08 | -- | -- | 0.15 | -- | -- | 0.00 | 1 |
| PWTK-1 | Post-Flash PW Tank | 1 of 2 | -- | -- | 0.04 | -- | -- | 0.00 | -- | -- | 0.00 | -- | -- | 0.00 | 0 |
| PWTK-2 | Post-Flash PW Tank | 2 of 2 | -- | -- | 0.04 | -- | -- | 0.00 | -- | -- | 0.00 | -- | -- | 0.00 | 0 |
| HT-1 | Separator Heater | 1 of 4 | 0.54 | 0.45 | 0.03 | 0.00 | 0.04 | 0.01 | 0.54 | 0.45 | 0.03 | 0.00 | 0.04 | 0.01 | 641 |
| HT-2 | Separator Heater | 2 of 4 | 0.54 | 0.45 | 0.03 | 0.00 | 0.04 | 0.01 | 0.54 | 0.45 | 0.03 | 0.00 | 0.04 | 0.01 | 641 |
| HT-3 | Separator Heater | 3 of 4 | 0.54 | 0.45 | 0.03 | 0.00 | 0.04 | 0.01 | 0.54 | 0.45 | 0.03 | 0.00 | 0.04 | 0.01 | 641 |
| HT-4 | Separator Heater | 4 of 4 | 0.54 | 0.45 | 0.03 | 0.00 | 0.04 | 0.01 | 0.54 | 0.45 | 0.03 | 0.00 | 0.04 | 0.01 | 641 |
| HT-5 | Fuel Gas Separator Heater | 1 of 1 | 0.30 | 0.25 | 0.02 | 0.00 | 0.02 | 0.01 | 0.30 | 0.25 | 0.02 | 0.00 | 0.02 | 0.01 | 359 |
| GEN-1* | Worst-Case Composite Generator Emissions | N/A | 1.21 | 3.18 | 0.26 | -- | -- | 2.27 | 1.21 | 3.18 | 0.26 | -- | -- | 2.27 | 3887 |
| OILLOAD-1 | Oil Loadout | 1 of 1 | -- | -- | 41.1 | -- | -- | 1.09 | -- | -- | 41.1 | -- | -- | 1.09 | -- |
| FUG-1 | Fugitives | N/A | -- | -- | 18.2 | -- | -- | 0.00 | -- | -- | 18.2 | -- | -- | 1.33 | 476 |
| COMP-1* | Worst-Case Composite Compressor Emissions | N/A | -- | -- | 1.39 | -- | -- | 0.18 | -- | -- | 1.39 | -- | -- | 0.18 | 59 |
| FL-1 | Emergency Flare | 1 of 2 | 0.03 | 0.14 | -- | -- | -- | -- | 0.24 | 1.08 | 2.02 | 0.00 | 0.01 | -- | 358 |
| FL-2 | Emergency Flare | 2 of 2 | 0.03 | 0.14 | -- | -- | -- | -- | 0.24 | 1.08 | 2.02 | 0.00 | 0.01 | -- | 358 |
| ROAD-1 | Road Dust | N/A | -- | -- | -- | -- | 1.92 | -- | -- | -- | -- | -- | 1.92 | -- | -- |
| | ***Facility-WideTotal Emissions (ton/year)*** | | 55.1 | 67.4 | 1590.2 | 0.09 | 3.34 | 32.1 | 12.8 | 24.5 | 83.3 | 0.09 | 3.36 | 8.97 | 11651 |

** Composite emissions represent the worst case emissions.*

## Summary of Air Emission Units (lb/hr)

| Unit Name | Unit Description | Qty | Potential Emissions (lb/hr) Uncontrolled + No Product Recovered | | | | | | Potential Emissions (lb/hr) Controlled + Product Recovery | | | | | |
|---|---|---|---|---|---|---|---|---|---|---|---|---|---|---|
| | | | NOx | CO | VOC | SO2 | PM10 | HAPs | NOx | CO | VOC | SO2 | PM10 | HAPs |
| ENG-1* | Worst-Case Composite Engine Emissions | N/A | 11.7 | 14.1 | 5.96 | 0.02 | 0.28 | 0.87 | 1.98 | 3.92 | 0.98 | 0.02 | 0.28 | 0.87 |
| VRT-1 | Vapor Recovery Tank | 1 of 2 | -- | -- | 166.4 | -- | -- | 2.69 | -- | -- | 1.33 | -- | -- | 0.02 |
| VRT-2 | Vapor Recovery Tank | 2 of 2 | -- | -- | 166.4 | -- | -- | 2.69 | -- | -- | 1.33 | -- | -- | 0.02 |
| TK-1 | Post-Flash Oil Tank | 1 of 15 | -- | -- | 0.70 | -- | -- | 0.02 | -- | -- | 0.03 | -- | -- | 0.00 |
| TK-2 | Post-Flash Oil Tank | 2 of 15 | -- | -- | 0.70 | -- | -- | 0.02 | -- | -- | 0.03 | -- | -- | 0.00 |
| TK-3 | Post-Flash Oil Tank | 3 of 15 | -- | -- | 0.70 | -- | -- | 0.02 | -- | -- | 0.03 | -- | -- | 0.00 |
| TK-4 | Post-Flash Oil Tank | 4 of 15 | -- | -- | 0.70 | -- | -- | 0.02 | -- | -- | 0.03 | -- | -- | 0.00 |
| TK-5 | Post-Flash Oil Tank | 5 of 15 | -- | -- | 0.70 | -- | -- | 0.02 | -- | -- | 0.03 | -- | -- | 0.00 |
| TK-6 | Post-Flash Oil Tank | 6 of 15 | -- | -- | 0.70 | -- | -- | 0.02 | -- | -- | 0.03 | -- | -- | 0.00 |
| TK-7 | Post-Flash Oil Tank | 7 of 15 | -- | -- | 0.70 | -- | -- | 0.02 | -- | -- | 0.03 | -- | -- | 0.00 |
| TK-8 | Post-Flash Oil Tank | 8 of 15 | -- | -- | 0.70 | -- | -- | 0.02 | -- | -- | 0.03 | -- | -- | 0.00 |
| TK-9 | Post-Flash Oil Tank | 9 of 15 | -- | -- | 0.70 | -- | -- | 0.02 | -- | -- | 0.03 | -- | -- | 0.00 |
| TK-10 | Post-Flash Oil Tank | 10 of 15 | -- | -- | 0.70 | -- | -- | 0.02 | -- | -- | 0.03 | -- | -- | 0.00 |
| TK-11 | Post-Flash Oil Tank | 11 of 15 | -- | -- | 0.70 | -- | -- | 0.02 | -- | -- | 0.03 | -- | -- | 0.00 |
| TK-12 | Post-Flash Oil Tank | 12 of 15 | -- | -- | 0.70 | -- | -- | 0.02 | -- | -- | 0.03 | -- | -- | 0.00 |
| TK-13 | Post-Flash Oil Tank | 13 of 15 | -- | -- | 0.70 | -- | -- | 0.02 | -- | -- | 0.03 | -- | -- | 0.00 |
| TK-14 | Post-Flash Oil Tank | 14 of 15 | -- | -- | 0.70 | -- | -- | 0.02 | -- | -- | 0.03 | -- | -- | 0.00 |
| TK-15 | Post-Flash Oil Tank | 15 of 15 | -- | -- | 0.70 | -- | -- | 0.02 | -- | -- | 0.03 | -- | -- | 0.00 |
| PWTK-1 | Post-Flash PW Tank | 1 of 2 | -- | -- | 0.01 | -- | -- | 0.00 | -- | -- | 0.00 | -- | -- | 0.00 |
| PWTK-2 | Post-Flash PW Tank | 2 of 2 | -- | -- | 0.01 | -- | -- | 0.00 | -- | -- | 0.00 | -- | -- | 0.00 |
| HT-1 | Separator Heater | 1 of 4 | 0.12 | 0.10 | 0.01 | 0.00 | 0.01 | 0.00 | 0.12 | 0.10 | 0.01 | 0.00 | 0.01 | 0.00 |
| HT-2 | Separator Heater | 2 of 4 | 0.12 | 0.10 | 0.01 | 0.00 | 0.01 | 0.00 | 0.12 | 0.10 | 0.01 | 0.00 | 0.01 | 0.00 |
| HT-3 | Separator Heater | 3 of 4 | 0.12 | 0.10 | 0.01 | 0.00 | 0.01 | 0.00 | 0.12 | 0.10 | 0.01 | 0.00 | 0.01 | 0.00 |
| HT-4 | Separator Heater | 4 of 4 | 0.12 | 0.10 | 0.01 | 0.00 | 0.01 | 0.00 | 0.12 | 0.10 | 0.01 | 0.00 | 0.01 | 0.00 |
| HT-5 | Fuel Gas Separator Heater | 1 of 1 | 0.07 | 0.06 | 0.00 | 0.00 | 0.01 | 0.00 | 0.07 | 0.06 | 0.00 | 0.00 | 0.01 | 0.00 |
| GEN-1* | Worst-Case Composite Generator Emissions | N/A | 0.28 | 0.73 | 0.06 | 0.00 | 0.00 | 0.52 | 0.28 | 0.73 | 0.06 | 0.00 | 0.00 | 0.52 |
| OILLOAD-1 | Oil Loadout | 1 of 1 | -- | -- | 17.8 | -- | -- | 0.25 | -- | -- | 17.8 | -- | -- | 0.25 |
| FUG-1 | Fugitives | N/A | -- | -- | 4.15 | -- | -- | 0.00 | -- | -- | 4.15 | -- | -- | 0.30 |
| COMP-1* | Worst-Case Composite Compressor Emissions | N/A | -- | -- | 0.32 | -- | -- | 0.04 | -- | -- | 0.32 | -- | -- | 0.04 |
| FL-1 | Emergency Flare | 1 of 2 | 0.01 | 0.03 | 0.00 | 0.00 | 0.00 | 0.00 | 0.05 | 0.25 | 0.46 | 0.00 | 0.00 | 0.00 |
| FL-2 | Emergency Flare | 2 of 2 | 0.01 | 0.03 | 0.00 | 0.00 | 0.00 | 0.00 | 0.05 | 0.25 | 0.46 | 0.00 | 0.00 | 0.00 |
| ROAD-1 | Road Dust | N/A | -- | -- | -- | -- | 1.52 | -- | -- | -- | -- | -- | 1.52 | -- |
| | ***Facility-WideTotal Emissions (lbs/hr)*** | | 12.6 | 15.4 | 371.4 | 0.02 | 1.84 | 7.34 | 2.92 | 5.60 | 27.4 | 0.02 | 1.85 | 2.05 |

** Composite emissions represent the worst case emissions.*

## Summary of Compressor Engine Air Emission Units

| Option Number | Unit Name | Make & Model | Fuel Type[1] | Potential Emissions (tons/year) Uncontrolled + No Product Recovered | | | | | | | | | | | | Potential Emissions (tons/year) Controlled + Product Recovery | | | | | | | | | | | | | | |
|---|---|---|---|---|---|---|---|---|---|---|---|---|---|---|---|---|---|---|---|---|---|---|---|---|---|---|---|---|---|---|
| | | | | NOx | | CO | | VOC | | SO2 | | PM | | HAPs | | NOx | | CO | | VOC | | SO2 | | PM | | HAPs | | Formaldehyde | | CO2e |
| | | | | lb/hr | tons/yr | lb/hr | tons/yr | lb/hr | tons/yr | lb/hr | tons/yr | lb/hr | tons/yr | lb/hr | tons/yr | lb/hr | tons/yr | lb/hr | tons/yr | lb/hr | tons/yr | lb/hr | tons/yr | lb/hr | tons/yr | lb/hr | tons/yr | lb/hr | tons/yr | tons/yr |
| 1 | ENG-1 | Caterpillar G3508B | Natural Gas | 1.39 | 6.10 | 3.60 | 15.7 | 0.98 | 4.27 | 0.00 | 0.00 | 0.05 | 0.23 | 0.67 | 2.92 | 1.39 | 6.10 | 2.79 | 12.2 | 0.98 | 4.27 | 0.00 | 0.00 | 0.05 | 0.23 | 0.22 | 0.97 | 0.14 | 0.62 | 2659 |
| | | | Propane | 1.39 | 6.10 | 4.47 | 19.6 | 5.96 | 26.12 | 0.02 | 0.09 | 0.28 | 1.24 | 0.87 | 3.80 | 1.39 | 6.10 | 2.79 | 12.2 | 0.98 | 4.27 | 0.02 | 0.09 | 0.28 | 1.24 | 0.87 | 3.80 | 0.39 | 1.71 | 3126 |
| | | | Option 1 Worst-Case Emissions: | 1.39 | 6.10 | 4.47 | 19.6 | 5.96 | 26.12 | 0.02 | 0.09 | 0.28 | 1.24 | 0.87 | 3.80 | 1.39 | 6.10 | 2.79 | 12.2 | 0.98 | 4.27 | 0.02 | 0.09 | 0.28 | 1.24 | 0.87 | 3.80 | 0.39 | 1.71 | 3126 |
| 2 | ENG-2 | Caterpillar G-3306TAA | Natural Gas | 11.7 | 51.4 | 0.85 | 3.73 | 0.30 | 1.31 | 0.00 | 0.00 | 0.03 | 0.14 | 0.08 | 0.34 | 0.43 | 1.87 | 0.85 | 3.73 | 0.30 | 1.31 | 0.00 | 0.00 | 0.03 | 0.14 | 0.08 | 0.34 | 0.06 | 0.28 | 855 |
| | | | Propane | 2.56 | 11.2 | 2.37 | 10.4 | 1.53 | 6.69 | 0.00 | 0.00 | 0.09 | 0.40 | 0.34 | 1.43 | 1.04 | 4.57 | 2.07 | 9.05 | 0.16 | 0.72 | 0.00 | 0.00 | 0.09 | 0.40 | 0.34 | 1.43 | 0.19 | 0.82 | 1016 |
| | | | Option 2 Worst-Case Emissions: | 11.7 | 51.4 | 2.37 | 10.4 | 1.53 | 6.69 | 0.00 | 0.00 | 0.09 | 0.40 | 0.34 | 1.43 | 1.04 | 4.57 | 2.07 | 9.05 | 0.30 | 1.31 | 0.00 | 0.00 | 0.09 | 0.40 | 0.34 | 1.43 | 0.19 | 0.82 | 1016 |
| 3 | ENG-3 | Caterpillar CG137-8 | Natural Gas | 9.99 | 43.8 | 9.99 | 43.8 | 0.57 | 2.48 | 0.00 | 0.00 | 0.06 | 0.26 | 0.07 | 0.32 | 0.81 | 3.54 | 1.62 | 7.08 | 0.57 | 2.48 | 0.00 | 0.00 | 0.06 | 0.26 | 0.07 | 0.32 | 0.05 | 0.21 | 1583 |
| | | | Propane | 4.74 | 20.8 | 4.40 | 19.3 | 2.83 | 12.40 | 0.00 | 0.00 | 0.17 | 0.75 | 0.64 | 2.66 | 1.98 | 8.66 | 3.92 | 17.1 | 0.31 | 1.37 | 0.00 | 0.00 | 0.17 | 0.75 | 0.64 | 2.66 | 0.35 | 1.53 | 1882 |
| | | | Option 3 Worst-Case Emissions: | 9.99 | 43.8 | 9.99 | 43.8 | 2.83 | 12.40 | 0.00 | 0.00 | 0.17 | 0.75 | 0.64 | 2.66 | 1.98 | 8.66 | 3.92 | 17.1 | 0.57 | 2.48 | 0.00 | 0.00 | 0.17 | 0.75 | 0.64 | 2.66 | 0.35 | 1.53 | 1882 |
| 4 | ENG-4 | Cummins QSL9G | Natural Gas | 7.07 | 31.0 | 14.1 | 61.9 | 0.25 | 1.08 | 0.00 | 0.00 | 0.03 | 0.11 | 0.04 | 0.16 | 0.35 | 1.55 | 0.71 | 3.10 | 0.25 | 1.08 | 0.00 | 0.00 | 0.03 | 0.11 | 0.04 | 0.16 | 0.03 | 0.12 | 665 |
| | | | Propane | 1.99 | 8.72 | 1.85 | 8.09 | 1.19 | 5.21 | 0.00 | 0.00 | 0.07 | 0.31 | 0.27 | 1.12 | 0.87 | 3.79 | 1.71 | 7.50 | 0.14 | 0.60 | 0.00 | 0.00 | 0.07 | 0.31 | 0.27 | 1.12 | 0.15 | 0.64 | 790 |
| | | | Option 4 Worst-Case Emissions: | 7.07 | 31.0 | 14.1 | 61.9 | 1.19 | 5.21 | 0.00 | 0.00 | 0.07 | 0.31 | 0.27 | 1.12 | 0.87 | 3.79 | 1.71 | 7.50 | 0.25 | 1.08 | 0.00 | 0.00 | 0.07 | 0.31 | 0.27 | 1.12 | 0.15 | 0.64 | 790 |
| 5 | ENG-5 | Cummins G8.3C118 | Natural Gas | 2.54 | 11.1 | 2.41 | 10.5 | 0.60 | 2.64 | 0.00 | 0.00 | 0.02 | 0.07 | 0.02 | 0.10 | 0.22 | 0.96 | 0.44 | 1.92 | 0.15 | 0.67 | 0.00 | 0.00 | 0.02 | 0.07 | 0.02 | 0.10 | 0.02 | 0.07 | 421 |
| | | | Propane | 1.26 | 5.52 | 1.17 | 5.12 | 0.75 | 3.29 | 0.00 | 0.00 | 0.05 | 0.20 | 0.17 | 0.71 | 0.54 | 2.35 | 1.06 | 4.64 | 0.21 | 0.91 | 0.00 | 0.00 | 0.05 | 0.20 | 0.17 | 0.71 | 0.09 | 0.41 | 500 |
| | | | Option 5 Worst-Case Emissions: | 2.54 | 11.1 | 2.41 | 10.5 | 0.75 | 3.29 | 0.00 | 0.00 | 0.05 | 0.20 | 0.17 | 0.71 | 0.54 | 2.35 | 1.06 | 4.64 | 0.21 | 0.91 | 0.00 | 0.00 | 0.05 | 0.20 | 0.17 | 0.71 | 0.09 | 0.41 | 500 |
| | | | ***Worst-Case Composite Engine Emissions*** | 11.7 | 51.4 | 14.1 | 61.9 | 5.96 | 26.12 | 0.02 | 0.09 | 0.28 | 1.24 | 0.87 | 3.80 | 1.98 | 8.66 | 3.92 | 17.1 | 0.98 | 4.27 | 0.02 | 0.09 | 0.28 | 1.24 | 0.87 | 3.80 | 0.39 | 1.71 | 3126 |

**Notes:**
1 - These engines can use either natural gas or propane as fuel.

## Summary of Compressor Air Emission Units

| Option Number | Unit Name | Source Description | Potential Emissions (tons/year) Uncontrolled + No Product Recovered VOC lb/hr | VOC tons/yr | HAPs lb/hr | HAPs tons/yr | Potential Emissions (tons/year) Controlled + Product Recovery VOC lb/hr | VOC tons/yr | HAPs lb/hr | HAPs tons/yr | CO2e tons/yr |
|---|---|---|---|---|---|---|---|---|---|---|---|
| 1 | COMP-1 | Compressor | 0.32 | 1.39 | 0.04 | 0.18 | 0.32 | 1.39 | 0.04 | 0.18 | 59 |
| | | Option 1 Total: | 0.32 | 1.39 | 0.04 | 0.18 | 0.32 | 1.39 | 0.04 | 0.18 | 59 |
| 2 | COMP-2 | Compressor | 0.01 | 0.03 | 0.00 | 0.00 | 0.01 | 0.03 | 0.00 | 0.00 | 6 |
| | | Option 2 Total: | 0.01 | 0.03 | 0.00 | 0.00 | 0.01 | 0.03 | 0.00 | 0.00 | 6 |
| 3 | COMP-3 | Compressor | 0.12 | 0.52 | 0.02 | 0.07 | 0.12 | 0.52 | 0.02 | 0.07 | 25 |
| | | Option 3 Total: | 0.12 | 0.52 | 0.02 | 0.07 | 0.12 | 0.52 | 0.02 | 0.07 | 25 |
| 4 | COMP-4 | Compressor | 0.01 | 0.03 | 0.00 | 0.00 | 0.01 | 0.03 | 0.00 | 0.00 | 6 |
| | | Option 4 Total: | 0.01 | 0.03 | 0.00 | 0.00 | 0.01 | 0.03 | 0.00 | 0.00 | 6 |
| 5 | COMP-5 | Compressor | 0.01 | 0.03 | 0.00 | 0.00 | 0.01 | 0.03 | 0.00 | 0.00 | 6 |
| | | Option 5 Total: | 0.01 | 0.03 | 0.00 | 0.00 | 0.01 | 0.03 | 0.00 | 0.00 | 6 |
| | ***Worst-Case Composite Compressor Emissions*** | | 0.32 | 1.39 | 0.04 | 0.18 | 0.32 | 1.39 | 0.04 | 0.18 | 59 |

## Summary of Generator Emission Units

| Option Number | Unit Name | Source Description | Potential Emissions (tons/year) Uncontrolled + No Product Recovered | | | | | | | | Potential Emissions (tons/year) Controlled + Product Recovery | | | | | | | | CO2e |
|---|---|---|---|---|---|---|---|---|---|---|---|---|---|---|---|---|---|---|---|
| | | | NOx | | CO | | VOC | | HAPs | | NOx | | CO | | VOC | | HAPs | | |
| | | | lb/hr | tons/yr | lb/hr | tons/yr | lb/hr | tons/yr | lb/hr | tons/yr | lb/hr | tons/yr | lb/hr | tons/yr | lb/hr | tons/yr | lb/hr | tons/yr | tons/yr |
| 1 | GEN-1 | Generator | 0.03 | 0.13 | 0.08 | 0.35 | 0.01 | 0.03 | 0.06 | 0.25 | 0.03 | 0.13 | 0.08 | 0.35 | 0.01 | 0.03 | 0.06 | 0.25 | 432 |
| | GEN-2 | Generator | 0.03 | 0.13 | 0.08 | 0.35 | 0.01 | 0.03 | 0.06 | 0.25 | 0.03 | 0.13 | 0.08 | 0.35 | 0.01 | 0.03 | 0.06 | 0.25 | 432 |
| | GEN-3 | Generator | 0.03 | 0.13 | 0.08 | 0.35 | 0.01 | 0.03 | 0.06 | 0.25 | 0.03 | 0.13 | 0.08 | 0.35 | 0.01 | 0.03 | 0.06 | 0.25 | 432 |
| | GEN-4 | Generator | 0.03 | 0.13 | 0.08 | 0.35 | 0.01 | 0.03 | 0.06 | 0.25 | 0.03 | 0.13 | 0.08 | 0.35 | 0.01 | 0.03 | 0.06 | 0.25 | 432 |
| | GEN-5 | Generator | 0.03 | 0.13 | 0.08 | 0.35 | 0.01 | 0.03 | 0.06 | 0.25 | 0.03 | 0.13 | 0.08 | 0.35 | 0.01 | 0.03 | 0.06 | 0.25 | 432 |
| | GEN-6 | Generator | 0.03 | 0.13 | 0.08 | 0.35 | 0.01 | 0.03 | 0.06 | 0.25 | 0.03 | 0.13 | 0.08 | 0.35 | 0.01 | 0.03 | 0.06 | 0.25 | 432 |
| | GEN-7 | Generator | 0.03 | 0.13 | 0.08 | 0.35 | 0.01 | 0.03 | 0.06 | 0.25 | 0.03 | 0.13 | 0.08 | 0.35 | 0.01 | 0.03 | 0.06 | 0.25 | 432 |
| | GEN-8 | Generator | 0.03 | 0.13 | 0.08 | 0.35 | 0.01 | 0.03 | 0.06 | 0.25 | 0.03 | 0.13 | 0.08 | 0.35 | 0.01 | 0.03 | 0.06 | 0.25 | 432 |
| | GEN-9 | Generator | 0.03 | 0.13 | 0.08 | 0.35 | 0.01 | 0.03 | 0.06 | 0.25 | 0.03 | 0.13 | 0.08 | 0.35 | 0.01 | 0.03 | 0.06 | 0.25 | 432 |
| | | Option 1 Total: | 0.28 | 1.21 | 0.73 | 3.18 | 0.06 | 0.26 | 0.52 | 2.27 | 0.28 | 1.21 | 0.73 | 3.18 | 0.06 | 0.26 | 0.52 | 2.27 | 3887 |
| 2 | GEN-10 | Generator | 0.08 | 0.36 | 0.22 | 0.96 | 0.02 | 0.09 | 0.16 | 0.68 | 0.08 | 0.36 | 0.22 | 0.96 | 0.02 | 0.09 | 0.16 | 0.68 | 1169 |
| | GEN-11 | Generator | 0.08 | 0.36 | 0.22 | 0.96 | 0.02 | 0.09 | 0.16 | 0.68 | 0.08 | 0.36 | 0.22 | 0.96 | 0.02 | 0.09 | 0.16 | 0.68 | 1169 |
| | GEN-12 | Generator | 0.08 | 0.36 | 0.22 | 0.96 | 0.02 | 0.09 | 0.16 | 0.68 | 0.08 | 0.36 | 0.22 | 0.96 | 0.02 | 0.09 | 0.16 | 0.68 | 1169 |
| | | Option 2 Total: | 0.25 | 1.09 | 0.66 | 2.88 | 0.06 | 0.26 | 0.47 | 2.05 | 0.25 | 1.09 | 0.66 | 2.88 | 0.06 | 0.26 | 0.47 | 2.05 | 3508 |
| | ***Worst-Case Composite Generator Emissions*** | | 0.28 | 1.21 | 0.73 | 3.18 | 0.06 | 0.26 | 0.52 | 2.27 | 0.28 | 1.21 | 0.73 | 3.18 | 0.06 | 0.26 | 0.52 | 2.27 | 3887 |

## Engine Emission Detail Sheet

| Item | Value |
|---|---|
| Source Name: | ENG-1 |
| Description: | Compressor Engine |
| QTY: | 1 of 2 |
| Make: | Caterpillar |
| Model: | Caterpillar G3508B |
| Serial Number: | TBD |
| Manufacture Date: | After 7/1/2010 |
| Fuel Type: | Natural Gas |
| Engine Type: | 4SLB |

| Item | Value | Units | Source |
|---|---|---|---|
| Rated Horsepower: | 690 | hp | Manufacturer |
| Derated Horsepower: | 632* | hp | AQB 02.002-00, *Turbine/Reciprocating Engine Derating* |
| Heat Rate: | 5.18 | MMBtu/hr | Calculated |
| Fuel Consumption: | 8203 | Btu/hp-hr | Manufacturer |
| Fuel Heat Value: | 1020 | btu/scf | Gas Analysis |
| Emisson Controls: | Catalyst | | Manufacturer |
| Control Efficiency | | | |
| Formaldehyde: | 76% | | Manufacturer |
| Control Efficiency NOx: | 0% | | Manufacturer/JJJJ |
| Control Efficiency VOC: | 0% | | Manufacturer/JJJJ |
| Control Efficiency CO: | 22% | | Manufacturer/JJJJ |
| Engine Speed: | 1400 | RPM | Manufacturer |
| Potential Operation: | 8760 | hr/yr | |
| Elevation: | 6805 | ft | |
| Sulfur Content | 0.0 | grains S/MMscf | Gas Analysis |

***Potential Emissions***

| Pollutant | Uncontrolled Emissions | | | | Controlled Emissions | | | | Source of Controlled Emission Factor |
|---|---|---|---|---|---|---|---|---|---|
| | EF | Units | (lb/hr) | (tpy) | EF | Units | (lb/hr) | (tpy) | |
| NOx | 1.00** | g/hp-hr | 1.39 | 6.10 | 1.00 | g/hp-hr | 1.39 | 6.10 | 40 CFR 60 Subpart JJJJ |
| VOC (less formaldehyde) | 0.70** | g/hp-hr | 0.975 | 4.27 | 0.70 | g/hp-hr | 0.975 | 4.27 | 40 CFR 60 Subpart JJJJ |
| CO | 2.58*** | g/hp-hr | 3.60 | 15.7 | 2.00 | g/hp-hr | 2.79 | 12.2 | 40 CFR 60 Subpart JJJJ |
| SO2 | 0.000588 | lb/mmBtu | 0.00 | 0.00 | 0.000588 | lb/mmBtu | 0.00 | 0.00 | EPA AP-42 Table 3.2-2 |
| PM10**** | 0.009987 | lb/mmBtu | 0.0518 | 0.227 | 0.009987 | lb/mmBtu | 0.0518 | 0.227 | EPA AP-42 Table 3.2-2 |

| HAPs | Uncontrolled Emission Factor | Units | Uncontrolled Emissions | | Controlled Emissions | | Source of Uncontrolled Emission Factor |
|---|---|---|---|---|---|---|---|
| | EF | Units | (lb/hr) | (tpy) | (lb/hr) | (tpy) | |
| Formaldehyde | 0.420 | g/hp-hr | 0.585 | 2.56 | 0.140 | 0.615 | Manufacturer |
| Acetaldehyde | 0.00836 | lb/mmBtu | 0.0433 | 0.190 | 0.0433 | 0.190 | EPA AP-42 Table 3.2-2 |
| Acrolein | 0.00514 | lb/mmBtu | 0.0266 | 0.117 | 0.0266 | 0.117 | EPA AP-42 Table 3.2-2 |
| Benzene | 0.00044 | lb/mmBtu | 0.00228 | 0.00999 | 0.00228 | 0.00999 | EPA AP-42 Table 3.2-2 |
| Ethylbenzene | 0.0000397 | lb/mmBtu | 0.000206 | 0.000901 | 0.000206 | 0.000901 | EPA AP-42 Table 3.2-2 |
| n-Hexane | 0.00111 | lb/mmBtu | 0.00575 | 0.0252 | 0.00575 | 0.0252 | EPA AP-42 Table 3.2-2 |
| Toluene | 0.000408 | lb/mmBtu | 0.00211 | 0.00926 | 0.00211 | 0.00926 | EPA AP-42 Table 3.2-2 |
| Xylene | 0.000184 | lb/mmBtu | 0.000954 | 0.00418 | 0.000954 | 0.00418 | EPA AP-42 Table 3.2-2 |
| | | **TOTAL HAP's:** | 0.667 | 2.92 | 0.222 | 0.971 | |

**Notes:**

* - This engine has been derated in accordance to NMED guidance procedure number: AQB 02.002-00

** - Uncontrolled and controlled NOx and VOC emission factors based on 40 CFR 60 Subpart JJJJ emission standards as manufacturer uncontrolled emission factors are lower than JJJJ standards.

*** - Uncontrolled emission factor for CO was taken from the Manufacturer technical data sheets. Controlled emission factor for CO based on 40 CFR 60 Subpart JJJJ emission standards.

**** - PM10 emissions include filterable and condensable particulates.

**Sample Calculation for NOx**

1.00 g/hp-hr * 632 hp / 453.59 g/lb * 8760 hr/yr / 2000 lb/ton = 6.10 tpy

## Engine Emission Detail Sheet

| Item | Value |
|---|---|
| Source Name: | ENG-1 |
| Description: | Compressor Engine |
| QTY: | 1 of 2 |
| Make: | Caterpillar |
| Model: | Caterpillar G3508B |
| Serial Number: | TBD |
| Manufacture Date: | After 7/1/2010 |
| Fuel Type: | Propane |
| Engine Type: | 4SLB |

| Item | Value | Units | Source |
|---|---|---|---|
| Rated Horsepower: | 690 | hp | Manufacturer |
| Derated Horsepower: | 632* | hp | AQB 02.002-00, *Turbine/Reciprocating Engine Derating* |
| Heat Rate: | 5.13 | MMBtu/hr | Calculated |
| Fuel Consumption: | 8116 | Btu/hp-hr | Manufacturer |
| Fuel Use | 56.67 | gal/hr | Calculated |
| Fuel Heat Value: | 0.0905 | MMBtu/gal | AP42 Appendix A, page A-6 |
| Emisson Controls: | Catalyst | | Manufacturer |
| Control Efficiency | | | |
| Formaldehyde: | 0% | | Manufacturer |
| Control Efficiency NOx: | 0% | | Manufacturer/JJJJ |
| Control Efficiency VOC: | 84% | | Manufacturer/JJJJ |
| Control Efficiency CO: | 38% | | Manufacturer/JJJJ |
| Engine Speed: | 1400 | RPM | Manufacturer |
| Potential Operation: | 8760 | hr/yr | |
| Elevation: | 6805 | ft | |
| Sulfur Content | 0.0 | grains S/MMscf | Gas Analysis |

***Potential Emissions***

| Pollutant | Uncontrolled Emissions | | | | Controlled Emissions | | | | Source of Controlled Emission Factor |
|---|---|---|---|---|---|---|---|---|---|
| | EF | Units | (lb/hr) | (tpy) | EF | Units | (lb/hr) | (tpy) | |
| NOx | 1.00** | g/hp-hr | 1.39 | 6.10 | 1.00 | g/hp-hr | 1.39 | 6.10 | 40 CFR 60 Subpart JJJJ |
| VOC (less formaldehyde) | 4.28*** | g/hp-hr | 5.96 | 26.12 | 0.70 | g/hp-hr | 0.975 | 4.272 | 40 CFR 60 Subpart JJJJ |
| CO | 3.21*** | g/hp-hr | 4.47 | 19.6 | 2.00 | g/hp-hr | 2.79 | 12.2 | 40 CFR 60 Subpart JJJJ |
| SO2 | 0.35 | lb/1000 gal | 0.0198 | 0.0869 | 0.35 | lb/1000 gal | 0.0198 | 0.0869 | Mojave Desert Air Quality Management District |
| PM10 | 5.00 | lb/1000 gal | 0.283 | 1.24 | 5.00 | lb/1000 gal | 0.283 | 1.24 | Mojave Desert Air Quality Management District |

| HAPs | Uncontrolled Emission Factor | Units | Uncontrolled Emissions | | Controlled Emissions | | Source of Uncontrolled Emission Factor |
|---|---|---|---|---|---|---|---|
| | EF | Units | (lb/hr) | (tpy) | (lb/hr) | (tpy) | |
| Formaldehyde | 0.280 | g/hp-hr | 0.390 | 1.71 | 0.390 | 1.71 | Manufacturer |
| Acetaldehyde | 3.29 | lb/1000 gal | 0.186 | 0.817 | 0.186 | 0.817 | Mojave Desert Air Quality Management District |
| Acrolein | 2.50 | lb/1000 gal | 0.142 | 0.622 | 0.142 | 0.622 | Mojave Desert Air Quality Management District |
| Benzene | 0.908 | lb/1000 gal | 0.0515 | 0.225 | 0.0515 | 0.225 | Mojave Desert Air Quality Management District |
| Ethylbenzene | 0.0468 | lb/1000 gal | 0.00265 | 0.0116 | 0.00265 | 0.0116 | Mojave Desert Air Quality Management District |
| n-Hexane | 0.888 | lb/1000 gal | 0.0503 | 0.221 | 0.0503 | 0.221 | Mojave Desert Air Quality Management District |
| Toluene | 0.478 | lb/1000 gal | 0.0271 | 0.119 | 0.0271 | 0.119 | Mojave Desert Air Quality Management District |
| Xylene | 0.326 | lb/1000 gal | 0.0185 | 0.0808 | 0.0185 | 0.0808 | Mojave Desert Air Quality Management District |
| | | **TOTAL HAP's:** | 0.869 | 3.80 | 0.869 | 3.80 | |

**Notes:**

* - This engine has been derated in accordance to NMED guidance procedure number: AQB 02.002-00

** - Uncontrolled and controlled NOx emission factors based on 40 CFR 60 Subpart JJJJ emission standards as manufacturer uncontrolled emission factors are lower than JJJJ standards.

*** - Uncontrolled emission factor for CO and VOC were taken from the Manufacturer technical data sheets. Controlled emission factor for CO and VOC based on 40 CFR 60 Subpart JJJJ emission standards.

**Sample Calculation for NOx**

1.00 g/hp-hr * 632 hp / 453.59 g/lb * 8760 hr/yr / 2000 lb/ton = 6.10 tpy

## Engine Emission Detail Sheet

| Item | Value |
|---|---|
| Source Name: | ENG-2 |
| Description: | Compressor Engine |
| QTY: | 2 of 2 |
| Make: | Caterpillar |
| Model: | Caterpillar G-3306TAA |
| Serial Number: | TBD |
| Manufacture Date: | After 1/1/2011 |
| Fuel Type: | Natural Gas |
| Engine Type: | 4SRB |

| Item | Value | Units | Source |
|---|---|---|---|
| Rated Horsepower: | 211 | hp | Manufacturer |
| Derated Horsepower: | 193* | hp | AQB 02.002-00, *Turbine/Reciprocating Engine Derating* |
| Heat Rate: | 1.67 | MMBtu/hr | Calculated |
| Fuel Consumption: | 8622 | Btu/hp-hr | Manufacturer |
| Fuel Heat Value: | 1020 | btu/scf | Gas Analysis |
| Emisson Controls: | EMIT Catalyst | | Manufacturer |
| Control Efficiency | | | |
| Formaldehyde: | 0% | | Manufacturer |
| Control Efficiency NOx: | 96% | | Manufacturer/JJJJ |
| Control Efficiency VOC: | 0% | | Manufacturer/JJJJ |
| Control Efficiency CO: | 0% | | Manufacturer/JJJJ |
| Engine Speed: | 1800 | RPM | Manufacturer |
| Potential Operation: | 8760 | hr/yr | |
| Elevation: | 6805 | ft | |
| Sulfur Content | 0.0 | grains S/MMscf | Gas Analysis |

***Potential Emissions***

| Pollutant | Uncontrolled Emissions | | | | Controlled Emissions | | | | Source of Controlled Emission Factor |
|---|---|---|---|---|---|---|---|---|---|
| | EF | Units | (lb/hr) | (tpy) | EF | Units | (lb/hr) | (tpy) | |
| NOx | 27.52** | g/hp-hr | 11.7 | 51.4 | 1.00 | g/hp-hr | 0.426 | 1.87 | 40 CFR 60 Subpart JJJJ |
| VOC (less formaldehyde) | 0.70*** | g/hp-hr | 0.298 | 1.31 | 0.70 | g/hp-hr | 0.298 | 1.31 | 40 CFR 60 Subpart JJJJ |
| CO | 2.00*** | g/hp-hr | 0.852 | 3.73 | 2.00 | g/hp-hr | 0.852 | 3.73 | 40 CFR 60 Subpart JJJJ |
| SO2 | 0.000588 | lb/mmBtu | 0.00 | 0.00 | 0.000588 | lb/mmBtu | 0.00 | 0.00 | EPA AP-42 Table 3.2-3 |
| PM10**** | 0.01941 | lb/mmBtu | 0.0323 | 0.142 | 0.01941 | lb/mmBtu | 0.0323 | 0.142 | EPA AP-42 Table 3.2-3 |

| HAPs | Uncontrolled Emission Factor | Units | Uncontrolled Emissions | | Controlled Emissions | | Source of Uncontrolled Emission Factor |
|---|---|---|---|---|---|---|---|
| | EF | Units | (lb/hr) | (tpy) | (lb/hr) | (tpy) | |
| Formaldehyde | 0.15 | g/hp-hr | 0.0639 | 0.280 | 0.0639 | 0.280 | Manufacturer |
| Acetaldehyde | 0.00279 | lb/mmBtu | 0.00465 | 0.0204 | 0.00465 | 0.0204 | EPA AP-42 Table 3.2-3 |
| Acrolein | 0.00263 | lb/mmBtu | 0.00438 | 0.0192 | 0.00438 | 0.0192 | EPA AP-42 Table 3.2-3 |
| Benzene | 0.00158 | lb/mmBtu | 0.00263 | 0.0115 | 0.00263 | 0.0115 | EPA AP-42 Table 3.2-3 |
| Ethylbenzene | 0.0000248 | lb/mmBtu | 0.0000413 | 0.000181 | 0.0000413 | 0.000181 | EPA AP-42 Table 3.2-3 |
| n-Hexane | N/A | lb/mmBtu | N/A | N/A | N/A | N/A | EPA AP-42 Table 3.2-3 |
| Toluene | 0.000558 | lb/mmBtu | 0.000930 | 0.00407 | 0.000930 | 0.00407 | EPA AP-42 Table 3.2-3 |
| Xylene | 0.000195 | lb/mmBtu | 0.000325 | 0.00142 | 0.000325 | 0.00142 | EPA AP-42 Table 3.2-3 |
| | | **TOTAL HAP's:** | 0.0769 | 0.337 | 0.0769 | 0.337 | |

**Notes:**

* - This engine has been derated in accordance to NMED guidance procedure number: AQB 02.002-00

** - Uncontrolled and controlled emission factors for NOx were taken from EMIT control data sheets and 40 CFR 60 Subpart JJJJ respectively.

*** - Uncontrolled and controlled CO and VOC emission factors based on 40 CFR 60 Subpart JJJJ emission standards as manufacturer uncontrolled emission factors are lower than JJJJ standards.

**** - PM10 emissions include filterable and condensable particulates.

**Sample Calculation for NOx**

1.00 g/hp-hr * 193 hp / 453.59 g/lb * 8760 hr/yr / 2000 lb/ton = 1.87 tpy

## Engine Emission Detail Sheet

| Item | Value |
|---|---|
| Source Name: | ENG-2 |
| Description: | Compressor Engine |
| QTY: | 2 of 2 |
| Make: | Caterpillar |
| Model: | Caterpillar G-3306TAA |
| Serial Number: | TBD |
| Manufacture Date: | After 1/1/2011 |
| Fuel Type: | Propane |
| Engine Type: | 4SRB |

| Item | Value | Units | Source |
|---|---|---|---|
| Rated Horsepower: | 211 | hp | Manufacturer |
| Derated Horsepower: | 193* | hp | AQB 02.002-00, *Turbine/Reciprocating Engine Derating* |
| Heat Rate: | 1.67 | MMBtu/hr | Calculated |
| Fuel Consumption: | 8622 | Btu/hp-hr | Manufacturer |
| Fuel Use | 18.41 | gal/hr | Calculated |
| Fuel Heat Value: | 0.0905 | MMBtu/gal | AP42 Appendix A, page A-6 |
| Emisson Controls: | EMIT Catalyst | | Manufacturer |
| Control Efficiency | | | |
| Formaldehyde: | 0% | | Manufacturer |
| Control Efficiency NOx: | 59% | | Manufacturer/JJJJ |
| Control Efficiency VOC: | 89% | | Manufacturer/JJJJ |
| Control Efficiency CO: | 13% | | Manufacturer/JJJJ |
| Engine Speed: | 1800 | RPM | Manufacturer |
| Potential Operation: | 8760 | hr/yr | |
| Elevation: | 6805 | ft | |
| Sulfur Content | 0.0 | grains S/MMscf | Gas Analysis |

***Potential Emissions***

| Pollutant | Uncontrolled Emissions | | | | Controlled Emissions | | | | Source of Controlled Emission Factor |
|---|---|---|---|---|---|---|---|---|---|
| | EF** | Units | (lb/hr) | (tpy) | EF*** | Units | (lb/hr) | (tpy) | |
| NOx | 139 | lb/1000 gal | 2.56 | 11.2 | 2.45 | g/hp-hr | 1.04 | 4.57 | 40 CFR Part 1048 |
| VOC | 83 | lb/1000 gal | 1.53 | 6.69 | 0.39 | g/hp-hr | 0.164 | 0.720 | 40 CFR Part 1048 |
| CO | 129 | lb/1000 gal | 2.37 | 10.4 | 4.85 | g/hp-hr | 2.07 | 9.05 | 40 CFR Part 1048 |
| SO2 | 0.35 | lb/1000 gal | 0.00 | 0.00 | 0.350000 | lb/1000 gal | 0.00 | 0.00 | Mojave Desert Air Quality Management District |
| PM10 | 5.00 | lb/1000 gal | 0.0921 | 0.403 | 5.00000 | lb/1000 gal | 0.0921 | 0.403 | Mojave Desert Air Quality Management District |

| HAPs | Uncontrolled Emission Factor | Units | Uncontrolled Emissions | | Controlled Emissions | | Source of Uncontrolled Emission Factor |
|---|---|---|---|---|---|---|---|
| | EF | Units | (lb/hr) | (tpy) | (lb/hr) | (tpy) | |
| Formaldehyde | 10.228 | lb/1000 gal | 0.188 | 0.825 | 0.188 | 0.825 | Mojave Desert Air Quality Management |
| Acetaldehyde | 3.291 | lb/1000 gal | 0.0606 | 0.265 | 0.0606 | 0.265 | Mojave Desert Air Quality Management |
| Acrolein | 2.504 | lb/1000 gal | 0.0461 | 0.202 | 0.0461 | 0.202 | Mojave Desert Air Quality Management |
| Benzene | 0.908 | lb/1000 gal | 0.0167 | 0.0732 | 0.0167 | 0.0732 | Mojave Desert Air Quality Management |
| Ethylbenzene | 0.0468 | lb/1000 gal | 0.000861 | 0.00377 | 0.000861 | 0.00377 | Mojave Desert Air Quality Management |
| n-Hexane | 0.888 | lb/1000 gal | 0.0164 | N/A | 0.0164 | N/A | Mojave Desert Air Quality Management |
| Toluene | 0.478 | lb/1000 gal | 0.00879 | 0.0385 | 0.00879 | 0.0385 | Mojave Desert Air Quality Management |
| Xylene | 0.326 | lb/1000 gal | 0.00599 | 0.0263 | 0.00599 | 0.0263 | Mojave Desert Air Quality Management |
| | | **TOTAL HAP's:** | 0.344 | 1.43 | 0.344 | 1.43 | |

**Notes:**

* - This engine has been derated in accordance to NMED guidance procedure number: AQB 02.002-00

** - Uncontrolled emission factors for NOx, VOC, and CO were taken from Mojave Desert Air Quality Management District. VOC emission factor was based on TOG.

*** - Controlled emission factors for NOx, VOC, and CO were taken from 40 CFR Part 1048.

**Sample Calculation for NOx**

2.45 g/hp-hr * 193 hp / 453.59 g/lb * 8760 hr/yr / 2000 lb/ton = 4.57 tpy

## Engine Emission Detail Sheet

| Item | Value |
|---|---|
| Source Name: | ENG-3 |
| Description: | Compressor Engine |
| QTY: | 1 of 2 |
| Make: | Caterpillar |
| Model: | Caterpillar CG137-8 |
| Serial Number: | TBD |
| Manufacture Date: | After 1/1/2011 |
| Fuel Type: | Natural Gas |
| Engine Type: | 4SRB |

| Item | Value | Units | Source |
|---|---|---|---|
| Rated Horsepower: | 400 | hp | Manufacturer |
| Derated Horsepower: | 366* | hp | AQB 02.002-00, *Turbine/Reciprocating Engine Derating* |
| Heat Rate: | 3.09 | MMBtu/hr | Calculated |
| Fuel Consumption: | 8426 | Btu/hp-hr | Manufacturer |
| Fuel Heat Value: | 1020 | btu/scf | Gas Analysis |
| Emisson Controls: | Catalyst | | Manufacturer |
| Control Efficiency | | | |
| Formaldehyde: | 0% | | Manufacturer |
| Control Efficiency NOx: | 92% | | Manufacturer/JJJJ |
| Control Efficiency VOC: | 0% | | Manufacturer/JJJJ |
| Control Efficiency CO: | 84% | | Manufacturer/JJJJ |
| Engine Speed: | 1800 | RPM | Manufacturer |
| Potential Operation: | 8760 | hr/yr | |
| Elevation: | 6805 | ft | |
| Sulfur Content | 0.0 | grains S/MMscf | Gas Analysis |

***Potential Emissions***

| Pollutant | Uncontrolled Emissions | | | | Controlled Emissions | | | | Source of Controlled Emission Factor |
|---|---|---|---|---|---|---|---|---|---|
| | EF | Units | (lb/hr) | (tpy) | EF | Units | (lb/hr) | (tpy) | |
| NOx | 12.37*** | g/hp-hr | 9.99 | 43.8 | 1.00 | g/hp-hr | 0.808 | 3.54 | 40 CFR 60 Subpart JJJJ |
| VOC (less formaldehyde) | 0.70** | g/hp-hr | 0.565 | 2.48 | 0.70 | g/hp-hr | 0.565 | 2.48 | 40 CFR 60 Subpart JJJJ |
| CO | 12.37*** | g/hp-hr | 9.99 | 43.8 | 2.00 | g/hp-hr | 1.62 | 7.08 | 40 CFR 60 Subpart JJJJ |
| SO2 | 0.000588 | lb/mmBtu | 0.00 | 0.00 | 0.000588 | lb/mmBtu | 0.00 | 0.00 | EPA AP-42 Table 3.2-3 |
| PM10**** | 0.01941 | lb/mmBtu | 0.0599 | 0.262 | 0.01941 | lb/mmBtu | 0.0599 | 0.262 | EPA AP-42 Table 3.2-3 |

| HAPs | Uncontrolled Emission Factor | Units | Uncontrolled Emissions | | Controlled Emissions | | Source of Uncontrolled Emission Factor |
|---|---|---|---|---|---|---|---|
| | EF | Units | (lb/hr) | (tpy) | (lb/hr) | (tpy) | |
| Formaldehyde | 0.0600 | g/hp-hr | 0.0485 | 0.212 | 0.0485 | 0.212 | Manufacturer |
| Acetaldehyde | 0.00279 | lb/mmBtu | 0.00861 | 0.0377 | 0.00861 | 0.0377 | EPA AP-42 Table 3.2-3 |
| Acrolein | 0.00263 | lb/mmBtu | 0.00812 | 0.0356 | 0.00812 | 0.0356 | EPA AP-42 Table 3.2-3 |
| Benzene | 0.00158 | lb/mmBtu | 0.00488 | 0.0214 | 0.00488 | 0.0214 | EPA AP-42 Table 3.2-3 |
| Ethylbenzene | 0.0000248 | lb/mmBtu | 0.0000766 | 0.000335 | 0.0000766 | 0.000335 | EPA AP-42 Table 3.2-3 |
| n-Hexane | N/A | lb/mmBtu | N/A | N/A | N/A | N/A | EPA AP-42 Table 3.2-3 |
| Toluene | 0.000558 | lb/mmBtu | 0.00172 | 0.00754 | 0.00172 | 0.00754 | EPA AP-42 Table 3.2-3 |
| Xylene | 0.000195 | lb/mmBtu | 0.000602 | 0.00264 | 0.000602 | 0.00264 | EPA AP-42 Table 3.2-3 |
| | | **TOTAL HAP's:** | 0.0725 | 0.317 | 0.0725 | 0.317 | |

**Notes:**

* - This engine has been derated in accordance to NMED guidance procedure number: AQB 02.002-00

** - Uncontrolled and controlled VOC emission factors based on 40 CFR 60 Subpart JJJJ emission standards as the manufacturer uncontrolled emission factor is lower than JJJJ standards.

*** - Uncontrolled emission factors for NOx and CO were taken from the Manufacturer technical data sheets. Controlled emission factors for NOx and CO based on 40 CFR 60 Subpart JJJJ emission standards.

**** - PM10 emissions include filterable and condensable particulates.

**Sample Calculation for NOx**

1.00 g/hp-hr * 366 hp / 453.59 g/lb * 8760 hr/yr / 2000 lb/ton = 3.54 tpy

## Engine Emission Detail Sheet

| Item | Value |
|---|---|
| Source Name: | ENG-3 |
| Description: | Compressor Engine |
| QTY: | 1 of 2 |
| Make: | Caterpillar |
| Model: | Caterpillar CG137-8 |
| Serial Number: | TBD |
| Manufacture Date: | After 1/1/2011 |
| Fuel Type: | Propane |
| Engine Type: | 4SRB |

| Item | Value | Units | Source |
|---|---|---|---|
| Rated Horsepower: | 400 | hp | Manufacturer |
| Derated Horsepower: | 366* | hp | AQB 02.002-00, *Turbine/Reciprocating Engine Derating* |
| Heat Rate: | 3.09 | MMBtu/hr | Calculated |
| Fuel Consumption: | 8426 | Btu/hp-hr | Manufacturer |
| Fuel Use | 34.11 | gal/hr | Calculated |
| Fuel Heat Value: | 0.0905 | MMBtu/gal | AP42 Appendix A, page A-6 |
| Emisson Controls: | Catalyst | | Manufacturer |
| Control Efficiency | | | |
| Formaldehyde: | 0% | | Manufacturer |
| Control Efficiency NOx: | 58% | | Manufacturer/JJJJ |
| Control Efficiency VOC: | 89% | | Manufacturer/JJJJ |
| Control Efficiency CO: | 11% | | Manufacturer/JJJJ |
| Engine Speed: | 1800 | RPM | Manufacturer |
| Potential Operation: | 8760 | hr/yr | |
| Elevation: | 6805 | ft | |
| Sulfur Content | 0.0 | grains S/MMscf | Gas Analysis |

***Potential Emissions***

| Pollutant | Uncontrolled Emissions | | | | Controlled Emissions | | | | Source of Controlled Emission Factor |
|---|---|---|---|---|---|---|---|---|---|
| | EF** | Units | (lb/hr) | (tpy) | EF*** | Units | (lb/hr) | (tpy) | |
| NOx | 139 | lb/1000 gal | 4.74 | 20.8 | 2.45 | g/hp-hr | 1.98 | 8.66 | 40 CFR Part 1048 |
| VOC | 83.00 | lb/1000 gal | 2.83 | 12.4 | 0.39 | g/hp-hr | 0.312 | 1.37 | 40 CFR Part 1048 |
| CO | 129 | lb/1000 gal | 4.40 | 19.3 | 4.85 | g/hp-hr | 3.92 | 17.1 | 40 CFR Part 1048 |
| SO2 | 0.35 | lb/1000 gal | 0.00 | 0.00 | 0.35 | lb/1000 gal | 0.00 | 0.00 | Mojave Desert Air Quality Management District |
| PM10 | 5.00 | lb/1000 gal | 0.171 | 0.747 | 5.00 | lb/1000 gal | 0.171 | 0.747 | Mojave Desert Air Quality Management District |

| HAPs | Uncontrolled Emission Factor | Units | Uncontrolled Emissions | | Controlled Emissions | | Source of Uncontrolled Emission Factor |
|---|---|---|---|---|---|---|---|
| | EF | Units | (lb/hr) | (tpy) | (lb/hr) | (tpy) | |
| Formaldehyde | 10.228 | lb/1000 gal | 0.349 | 1.53 | 0.349 | 1.53 | Mojave Desert Air Quality Management District |
| Acetaldehyde | 3.291 | lb/1000 gal | 0.112 | 0.492 | 0.112 | 0.492 | Mojave Desert Air Quality Management District |
| Acrolein | 2.504 | lb/1000 gal | 0.0854 | 0.374 | 0.0854 | 0.374 | Mojave Desert Air Quality Management District |
| Benzene | 0.908 | lb/1000 gal | 0.0310 | 0.136 | 0.0310 | 0.136 | Mojave Desert Air Quality Management District |
| Ethylbenzene | 0.0468 | lb/1000 gal | 0.00159 | 0.00698 | 0.00159 | 0.00698 | Mojave Desert Air Quality Management District |
| n-Hexane | 0.888 | lb/1000 gal | 0.0303 | N/A | 0.0303 | N/A | Mojave Desert Air Quality Management District |
| Toluene | 0.478 | lb/1000 gal | 0.0163 | 0.0713 | 0.0163 | 0.0713 | Mojave Desert Air Quality Management District |
| Xylene | 0.326 | lb/1000 gal | 0.0111 | 0.0486 | 0.0111 | 0.0486 | Mojave Desert Air Quality Management District |
| | | **TOTAL HAP's:** | 0.637 | 2.66 | 0.637 | 2.66 | |

**Notes:**

* - This engine has been derated in accordance to NMED guidance procedure number: AQB 02.002-00

** - Uncontrolled emission factors for NOx, VOC, and CO were taken from Mojave Desert Air Quality Management District. VOC emission factor was based on TOG.

*** - Controlled emission factors for NOx, VOC, and CO were taken from 40 CFR Part 1048.

**Sample Calculation for NOx**

2.45 g/hp-hr * 366 hp / 453.59 g/lb * 8760 hr/yr / 2000 lb/ton = 8.66 tpy

## Engine Emission Detail Sheet

| Item | Value |
|---|---|
| Source Name: | ENG-4 |
| Description: | Compressor Engine |
| QTY: | 1 of 1 |
| Make: | Cummins |
| Model: | Cummins QSL9G |
| Serial Number: | TBD |
| Manufacture Date: | After 1/1/2011 |
| Fuel Type: | Natural Gas |
| Engine Type: | 4SRB |

| Item | Value | Units | Source |
|---|---|---|---|
| Rated Horsepower: | 175 | hp | Manufacturer |
| Derated Horsepower: | 160* | hp | AQB 02.002-00, *Turbine/Reciprocating Engine Derating* |
| Heat Rate: | 1.30 | MMBtu/hr | Calculated |
| Fuel Consumption: | 8086 | Btu/hp-hr | Manufacturer |
| Fuel Heat Value: | 1020 | btu/scf | Gas Analysis |
| Emisson Controls: | EMIT Catalyst | | Manufacturer |
| Control Efficiency | | | |
| Formaldehyde: | 0% | | Manufacturer |
| Control Efficiency NOx: | 95% | | Manufacturer/JJJJ |
| Control Efficiency VOC: | 0% | | Manufacturer/JJJJ |
| Control Efficiency CO: | 95% | | Manufacturer/JJJJ |
| Engine Speed: | 1800 | RPM | Manufacturer |
| Potential Operation: | 8760 | hr/yr | |
| Elevation: | 6805 | ft | |
| Sulfur Content | 0.0 | grains S/MMscf | Gas Analysis |

***Potential Emissions***

| Pollutant | Uncontrolled Emissions | | | | Controlled Emissions | | | | Source of Controlled Emission Factor |
|---|---|---|---|---|---|---|---|---|---|
| | EF | Units | (lb/hr) | (tpy) | EF | Units | (lb/hr) | (tpy) | |
| NOx | 20.0** | g/hp-hr | 7.07 | 31.0 | 1.00 | g/hp-hr | 0.353 | 1.55 | 40 CFR 60 Subpart JJJJ |
| VOC (less formaldehyde) | 0.70** | g/hp-hr | 0.247 | 1.08 | 0.70 | g/hp-hr | 0.247 | 1.08 | 40 CFR 60 Subpart JJJJ |
| CO | 40.0** | g/hp-hr | 14.1 | 61.9 | 2.00 | g/hp-hr | 0.707 | 3.10 | 40 CFR 60 Subpart JJJJ |
| SO2 | 0.000588 | lb/mmBtu | 0.00 | 0.00 | 0.000588 | lb/mmBtu | 0.00 | 0.00 | EPA AP-42 Table 3.2-3 |
| PM10*** | 0.01941 | lb/mmBtu | 0.0252 | 0.110 | 0.019410 | lb/mmBtu | 0.0252 | 0.110 | EPA AP-42 Table 3.2-3 |

| HAPs | Uncontrolled Emission Factor | Units | Uncontrolled Emissions | | Controlled Emissions | | Source of Uncontrolled Emission Factor |
|---|---|---|---|---|---|---|---|
| | EF | Units | (lb/hr) | (tpy) | (lb/hr) | (tpy) | |
| Formaldehyde | 0.0205 | lb/mmBtu | 0.0266 | 0.116 | 0.0266 | 0.116 | EPA AP-42 Table 3.2-3 |
| Acetaldehyde | 0.00279 | lb/mmBtu | 0.00362 | 0.0158 | 0.00362 | 0.0158 | EPA AP-42 Table 3.2-3 |
| Acrolein | 0.00263 | lb/mmBtu | 0.00341 | 0.0149 | 0.00341 | 0.0149 | EPA AP-42 Table 3.2-3 |
| Benzene | 0.00158 | lb/mmBtu | 0.00205 | 0.00897 | 0.00205 | 0.00897 | EPA AP-42 Table 3.2-3 |
| Ethylbenzene | 0.0000248 | lb/mmBtu | 0.0000321 | 0.000141 | 0.0000321 | 0.000141 | EPA AP-42 Table 3.2-3 |
| n-Hexane | N/A | lb/mmBtu | N/A | N/A | N/A | N/A | EPA AP-42 Table 3.2-3 |
| Toluene | 0.000558 | lb/mmBtu | 0.000723 | 0.00317 | 0.000723 | 0.00317 | EPA AP-42 Table 3.2-3 |
| Xylene | 0.000195 | lb/mmBtu | 0.000253 | 0.00111 | 0.000253 | 0.00111 | EPA AP-42 Table 3.2-3 |
| | | **TOTAL HAP's:** | 0.0366 | 0.161 | 0.0366 | 0.161 | |

**Notes:**

* - This engine has been derated in accordance to NMED guidance procedure number: AQB 02.002-00
** - Uncontrolled emission factors for NOx, CO, and VOC were back calculated assuming 95% catalyst control efficiency.
*** - PM10 emissions include filterable and condensable particulates.

**Sample Calculation for NOx**

1.00 g/hp-hr * 160 hp / 453.59 g/lb * 8760 hr/yr / 2000 lb/ton = 1.55 tpy

## Engine Emission Detail Sheet

| Item | Value |
|---|---|
| Source Name: | ENG-4 |
| Description: | Compressor Engine |
| QTY: | 1 of 1 |
| Make: | Cummins |
| Model: | Cummins QSL9G |
| Serial Number: | TBD |
| Manufacture Date: | After 1/1/2011 |
| Fuel Type: | Propane |
| Engine Type: | 4SRB |

| Item | Value | Units | Source |
|---|---|---|---|
| Rated Horsepower: | 175 | hp | Manufacturer |
| Derated Horsepower: | 160* | hp | AQB 02.002-00, *Turbine/Reciprocating Engine Derating* |
| Heat Rate: | 1.30 | MMBtu/hr | Calculated |
| Fuel Consumption: | 8086 | Btu/hp-hr | Manufacturer |
| Fuel Use | 14.32 | gal/hr | Calculated |
| Fuel Heat Value: | 0.0905 | MMBtu/gal | AP42 Appendix A, page A-6 |
| Emisson Controls: | EMIT Catalyst | | Manufacturer |
| Control Efficiency | | | |
| Formaldehyde: | 0% | | Manufacturer |
| Control Efficiency NOx: | 57% | | Manufacturer/JJJJ |
| Control Efficiency VOC: | 89% | | Manufacturer/JJJJ |
| Control Efficiency CO: | 7% | | Manufacturer/JJJJ |
| Engine Speed: | 1800 | RPM | Manufacturer |
| Potential Operation: | 8760 | hr/yr | |
| Elevation: | 6805 | ft | |
| Sulfur Content | 0.0 | grains S/MMscf | Gas Analysis |

***Potential Emissions***

| Pollutant | Uncontrolled Emissions | | | | Controlled Emissions | | | | Source of Controlled Emission Factor |
|---|---|---|---|---|---|---|---|---|---|
| | EF** | Units | (lb/hr) | (tpy) | EF*** | Units | (lb/hr) | (tpy) | |
| NOx | 139 | lb/1000 gal | 1.99 | 8.72 | 2.45 | g/hp-hr | 0.865 | 3.79 | 40 CFR Part 1048 |
| VOC | 83 | lb/1000 gal | 1.19 | 5.21 | 0.39 | g/hp-hr | 0.136 | 0.598 | 40 CFR Part 1048 |
| CO | 129 | lb/1000 gal | 1.85 | 8.09 | 4.85 | g/hp-hr | 1.71 | 7.50 | 40 CFR Part 1048 |
| SO2 | 0.35 | lb/1000 gal | 0.00 | 0.00 | 0.35 | lb/1000 gal | 0.00 | 0.00 | Mojave Desert Air Quality Management District |
| PM10 | 5.00 | lb/1000 gal | 0.0716 | 0.314 | 5.00 | lb/1000 gal | 0.0716 | 0.314 | Mojave Desert Air Quality Management District |

| HAPs | Uncontrolled Emission Factor | Units | Uncontrolled Emissions | | Controlled Emissions | | Source of Uncontrolled Emission Factor |
|---|---|---|---|---|---|---|---|
| | EF | Units | (lb/hr) | (tpy) | (lb/hr) | (tpy) | |
| Formaldehyde | 10.228 | lb/1000 gal | 0.146 | 0.641 | 0.146 | 0.641 | Mojave Desert Air Quality Management District |
| Acetaldehyde | 3.291 | lb/1000 gal | 0.0471 | 0.206 | 0.0471 | 0.206 | Mojave Desert Air Quality Management District |
| Acrolein | 2.504 | lb/1000 gal | 0.0359 | 0.157 | 0.0359 | 0.157 | Mojave Desert Air Quality Management District |
| Benzene | 0.908 | lb/1000 gal | 0.0130 | 0.0570 | 0.0130 | 0.0570 | Mojave Desert Air Quality Management District |
| Ethylbenzene | 0.0468 | lb/1000 gal | 0.000669 | 0.00293 | 0.000669 | 0.00293 | Mojave Desert Air Quality Management District |
| n-Hexane | 0.888 | lb/1000 gal | 0.0127 | N/A | 0.0127 | N/A | Mojave Desert Air Quality Management District |
| Toluene | 0.478 | lb/1000 gal | 0.00684 | 0.0299 | 0.00684 | 0.0299 | Mojave Desert Air Quality Management District |
| Xylene | 0.326 | lb/1000 gal | 0.00466 | 0.0204 | 0.00466 | 0.0204 | Mojave Desert Air Quality Management District |
| | | **TOTAL HAP's:** | 0.267 | 1.12 | 0.267 | 1.12 | |

**Notes:**

* - This engine has been derated in accordance to NMED guidance procedure number: AQB 02.002-00

** - Uncontrolled emission factors for NOx, VOC, and CO were taken from Mojave Desert Air Quality Management District. VOC emission factor was based on TOG.

*** - Controlled emission factors for NOx, VOC, and CO were taken from 40 CFR Part 1048.

**Sample Calculation for NOx**

2.45 g/hp-hr * 160 hp / 453.59 g/lb * 8760 hr/yr / 2000 lb/ton = 3.79 tpy

## Engine Emission Detail Sheet

| Item | Value |
|---|---|
| Source Name: | ENG-5 |
| Description: | Compressor Engine |
| QTY: | 1 of 1 |
| Make: | Cummins |
| Model: | Cummins G8.3C118 |
| Serial Number: | TBD |
| Manufacture Date: | After 1/1/2011 |
| Fuel Type: | Natural Gas |
| Engine Type: | 4SRB |

| Item | Value | Units | Source |
|---|---|---|---|
| Rated Horsepower: | 118 | hp | Manufacturer |
| Derated Horsepower: | 99* | hp | AQB 02.002-00, *Turbine/Reciprocating Engine Derating* |
| Heat Rate: | 0.82 | MMBtu/hr | Calculated |
| Fuel Consumption: | 8266 | Btu/hp-hr | Manufacturer |
| Fuel Heat Value: | 1020 | btu/scf | Gas Analysis |
| Emisson Controls: | EMIT Catalyst | | Manufacturer |
| Control Efficiency | | | |
| Formaldehyde: | 0% | | Manufacturer |
| Control Efficiency NOx: | 91% | | Manufacturer/JJJJ |
| Control Efficiency VOC: | 75% | | Manufacturer/JJJJ |
| Control Efficiency CO: | 82% | | Manufacturer/JJJJ |
| Engine Speed: | 1800 | RPM | Manufacturer |
| Potential Operation: | 8760 | hr/yr | |
| Elevation: | 6805 | ft | |
| Sulfur Content | 0.0 | grains S/MMscf | Gas Analysis |

***Potential Emissions***

| Pollutant | Uncontrolled Emissions | | | | Controlled Emissions | | | | Source of Controlled Emission Factor |
|---|---|---|---|---|---|---|---|---|---|
| | EF | Units | (lb/hr) | (tpy) | EF | Units | (lb/hr) | (tpy) | |
| NOx | 11.6** | g/hp-hr | 2.54 | 11.1 | 1.00 | g/hp-hr | 0.219 | 0.958 | 40 CFR 60 Subpart JJJJ |
| VOC (less formaldehyde) | 2.75** | g/hp-hr | 0.602 | 2.64 | 0.70 | g/hp-hr | 0.153 | 0.671 | 40 CFR 60 Subpart JJJJ |
| CO | 11.0** | g/hp-hr | 2.41 | 10.5 | 2.00 | g/hp-hr | 0.438 | 1.92 | 40 CFR 60 Subpart JJJJ |
| SO2 | 0.000588 | lb/mmBtu | 0.00 | 0.00 | 0.000588 | lb/mmBtu | 0.00 | 0.00 | EPA AP-42 Table 3.2-3 |
| PM10*** | 0.01941 | lb/mmBtu | 0.0159 | 0.0697 | 0.01941 | lb/mmBtu | 0.0159 | 0.0697 | EPA AP-42 Table 3.2-3 |

| HAPs | Uncontrolled Emission Factor | Units | Uncontrolled Emissions | | Controlled Emissions | | Source of Uncontrolled Emission Factor |
|---|---|---|---|---|---|---|---|
| | EF | Units | (lb/hr) | (tpy) | (lb/hr) | (tpy) | |
| Formaldehyde | 0.0205 | lb/mmBtu | 0.0168 | 0.0736 | 0.0168 | 0.0736 | EPA AP-42 Table 3.2-3 |
| Acetaldehyde | 0.00279 | lb/mmBtu | 0.00229 | 0.0100 | 0.00229 | 0.0100 | EPA AP-42 Table 3.2-3 |
| Acrolein | 0.00263 | lb/mmBtu | 0.00216 | 0.00945 | 0.00216 | 0.00945 | EPA AP-42 Table 3.2-3 |
| Benzene | 0.00158 | lb/mmBtu | 0.00130 | 0.00568 | 0.00130 | 0.00568 | EPA AP-42 Table 3.2-3 |
| Ethylbenzene | 0.0000248 | lb/mmBtu | 0.0000203 | 0.0000891 | 0.0000203 | 0.0000891 | EPA AP-42 Table 3.2-3 |
| n-Hexane | N/A | lb/mmBtu | N/A | N/A | N/A | N/A | EPA AP-42 Table 3.2-3 |
| Toluene | 0.000558 | lb/mmBtu | 0.000458 | 0.00200 | 0.000458 | 0.00200 | EPA AP-42 Table 3.2-3 |
| Xylene | 0.000195 | lb/mmBtu | 0.000160 | 0.000700 | 0.000160 | 0.000700 | EPA AP-42 Table 3.2-3 |
| | | **TOTAL HAP's:** | 0.0232 | 0.102 | 0.0232 | 0.102 | |

**Notes:**

* - This engine has been derated in accordance to NMED guidance procedure number: AQB 02.002-00

** - Uncontrolled and controlled emission factors for NOx, VOC, and CO were taken from EMIT control data sheets and 40 CFR 60 Subpart JJJJ respectively.

*** - PM10 emissions include filterable and condensable particulates.

**Sample Calculation for NOx**

1.00 g/hp-hr * 99 hp / 453.59 g/lb * 8760 hr/yr / 2000 lb/ton = 0.96 tpy

## Engine Emission Detail Sheet

| Item | Value |
|---|---|
| Source Name: | ENG-5 |
| Description: | Compressor Engine |
| QTY: | 1 of 1 |
| Make: | Cummins |
| Model: | Cummins G8.3C118 |
| Serial Number: | TBD |
| Manufacture Date: | After 1/1/2011 |
| Fuel Type: | Propane |
| Engine Type: | 4SRB |

| Item | Value | Units | Source |
|---|---|---|---|
| Rated Horsepower: | 118 | hp | Manufacturer |
| Derated Horsepower: | 99* | hp | AQB 02.002-00, *Turbine/Reciprocating Engine Derating* |
| Heat Rate: | 0.82 | MMBtu/hr | Calculated |
| Fuel Consumption: | 8266 | Btu/hp-hr | Manufacturer |
| Fuel Use | 9.06 | gal/hr | Calculated |
| Fuel Heat Value: | 0.0905 | MMBtu/gal | AP42 Appendix A, page A-6 |
| Emisson Controls: | EMIT Catalyst | | Manufacturer |
| Control Efficiency | | | |
| Formaldehyde: | 0% | | Manufacturer |
| Control Efficiency NOx: | 57% | | Manufacturer/JJJJ |
| Control Efficiency VOC: | 72% | | Manufacturer/JJJJ |
| Control Efficiency CO: | 9% | | Manufacturer/JJJJ |
| Engine Speed: | 1800 | RPM | Manufacturer |
| Potential Operation: | 8760 | hr/yr | |
| Elevation: | 6805 | ft | |
| Sulfur Content | 0.0 | grains S/MMscf | Gas Analysis |

***Potential Emissions***

| Pollutant | Uncontrolled Emissions | | | | Controlled Emissions | | | | Source of Controlled Emission Factor |
|---|---|---|---|---|---|---|---|---|---|
| | EF** | Units | (lb/hr) | (tpy) | EF*** | Units | (lb/hr) | (tpy) | |
| NOx | 139 | lb/1000 gal | 1.26 | 5.52 | 2.45 | g/hp-hr | 0.535 | 2.35 | 40 CFR Part 1048 |
| VOC | 83 | lb/1000 gal | 0.752 | 3.29 | 0.39 | g/hp-hr | 0.207 | 0.906 | 40 CFR Part 1048 |
| CO | 129 | lb/1000 gal | 1.17 | 5.12 | 4.85 | g/hp-hr | 1.06 | 4.64 | 40 CFR Part 1048 |
| SO2 | 0.35 | lb/1000 gal | 0.00 | 0.0000 | 0.35 | lb/1000 gal | 0.00 | 0.00 | Mojave Desert Air Quality Management District |
| PM10 | 5.00 | lb/1000 gal | 0.0453 | 0.198 | 5.00 | lb/1000 gal | 0.0453 | 0.198 | Mojave Desert Air Quality Management District |

| HAPs | Uncontrolled Emission Factor | Units | Uncontrolled Emissions | | Controlled Emissions | | Source of Uncontrolled Emission Factor |
|---|---|---|---|---|---|---|---|
| | EF | Units | (lb/hr) | (tpy) | (lb/hr) | (tpy) | |
| Formaldehyde | 10.228 | lb/1000 gal | 0.0927 | 0.406 | 0.0927 | 0.406 | Mojave Desert Air Quality Management |
| Acetaldehyde | 3.291 | lb/1000 gal | 0.0298 | 0.131 | 0.0298 | 0.131 | Mojave Desert Air Quality Management |
| Acrolein | 2.504 | lb/1000 gal | 0.0227 | 0.0994 | 0.0227 | 0.0994 | Mojave Desert Air Quality Management |
| Benzene | 0.908 | lb/1000 gal | 0.00823 | 0.0361 | 0.00823 | 0.0361 | Mojave Desert Air Quality Management |
| Ethylbenzene | 0.0468 | lb/1000 gal | 0.000424 | 0.00186 | 0.000424 | 0.00186 | Mojave Desert Air Quality Management |
| n-Hexane | 0.888 | lb/1000 gal | 0.00805 | N/A | 0.00805 | N/A | Mojave Desert Air Quality Management |
| Toluene | 0.478 | lb/1000 gal | 0.00433 | 0.0190 | 0.00433 | 0.0190 | Mojave Desert Air Quality Management |
| Xylene | 0.326 | lb/1000 gal | 0.00295 | 0.0129 | 0.00295 | 0.0129 | Mojave Desert Air Quality Management |
| | | **TOTAL HAP's:** | 0.169 | 0.706 | 0.169 | 0.706 | |

**Notes:**

* - This engine has been derated in accordance to NMED guidance procedure number: AQB 02.002-00

** - Uncontrolled emission factors for NOx, VOC, and CO were taken from Mojave Desert Air Quality Management District. VOC emission factor was based on TOG.

*** - Controlled emission factors for NOx, VOC, and CO were taken from 40 CFR Part 1048.

**Sample Calculation for NOx**

2.45 g/hp-hr * 99 hp / 453.59 g/lb * 8760 hr/yr / 2000 lb/ton = 2.35 tpy

**Tank Detail Sheet**

| | | | | | |
|---|---|---|---|---|---|
| Area | Chaco Slope | | Tank Height | 30 | ft |
| Equipment Source Name | VRT-1 | | Oil Flash Factor | 18.2181 | $ft^3$/bbl |
| Number of Tanks | 1 of 2 | | Std Volume | 379 | scf/lb-mol |
| Tank Capacity | 750 | bbl (each) | Potential Operation | 8760 | hr/yr |
| Tank Contents | Vapor Recovery Tank | | Potential PW Throughput | 365000 | bbl/yr |
| VRU 1 Product Recovery Efficiency | 95% | | Potential Oil from PW Throughput | 18250 | bbl/yr |
| VRU 2 Product Recovery Efficiency | 60% | | Potential Oil Throughput | 675250 | bbl/yr |
| VRU 3 Product Recovery Efficiency | 60% | | Total Throughput (E&P Tanks) | 1900 | bbl/day |
| Composite VRU Operation | 99.20% | | Calendar Year | 2017 | |

*Potential Emissions - Oil*

| Pollutant | Potential Throughput (bbl/d) | Max Battery Potential Emissions | | | | Source of Emission Factor |
|---|---|---|---|---|---|---|
| | | Uncontrolled | | Controlled | | |
| | | (lb/hr) | (ton/yr) | (lb/hr) | (ton/yr) | |
| VOC | 1900 | 166.4 | 728.6 | 1.33 | 5.83 | E&P Tanks v3.0 |
| Benzene | 1900 | 0.214 | 0.939 | 0.00172 | 0.00751 | E&P Tanks v3.0 |
| Toluene | 1900 | 0.203 | 0.889 | 0.00162 | 0.00711 | E&P Tanks v3.0 |
| Ethylbenzene | 1900 | 0.0244 | 0.107 | 0.000195 | 0.000856 | E&P Tanks v3.0 |
| Xylenes | 1900 | 0.0916 | 0.401 | 0.000732 | 0.00321 | E&P Tanks v3.0 |
| n-Hexane | 1900 | 2.15 | 9.44 | 0.0172 | 0.0755 | E&P Tanks v3.0 |
| Total HAPs | | 2.69 | 11.8 | 0.0215 | 0.0942 | |

1 - Uncontrolled emissions were taken directly from the E&P Tanks v3.0 output. Grand Junction, CO was used for meteorological data in E&P Tanks simulation instead of Albuquerque, NM because its elevation and climate are more similar to the well site location.

2 - Reduced working/breathing and flash losses are calculated from the pre-VRU working/breathing and flash losses assuming the VRU's operate at 100% collection efficiency and worst case uptimes of 95% for the primary VRU and 60% for the secondary and tertiary VRU's to be conservative.

3 - Potential oil from produced water throughput based on the assumption that 5% of produced water throughput is oil.

4 - This vapor recovery tank is a process vessel rather than a storage vessel per the definition in §60.5430a and is therefore not subject to the requirements of NSPS 40 CFR 60 Subpart OOOOa.

**Tank Detail Sheet**

| | | | |
|---|---|---|---|
| Area | Chaco Slope | Tank Height | 30 ft |
| Equipment Source Name | VRT-2 | Oil Flash Factor | 18.2181 $ft^3$/bbl |
| Number of Tanks | 2 of 2 | Std Volume | 379 scf/lb-mol |
| Tank Capacity | 750 bbl (each) | Potential Operation | 8760 hr/yr |
| Tank Contents | Vapor Recovery Tank | Potential PW Throughput | 365000 bbl/yr |
| VRU 1 Product Recovery Efficiency | 95% | Potential Oil from PW Throughput | 18250 bbl/yr |
| VRU 2 Product Recovery Efficiency | 60% | Potential Oil Throughput | 675250 bbl/yr |
| VRU 3 Product Recovery Efficiency | 60% | Total Throughput (E&P Tanks) | 1900 bbl/day |
| Composite VRU Operation | 99.20% | Calendar Year | 2017 |

*Potential Emissions - Oil*

| Pollutant | Potential Throughput (bbl/d) | Max Battery Potential Emissions | | | | Source of Emission Factor |
|---|---|---|---|---|---|---|
| | | Uncontrolled | | Controlled | | |
| | | (lb/hr) | (ton/yr) | (lb/hr) | (ton/yr) | |
| VOC | 1900 | 166.4 | 728.6 | 1.33 | 5.83 | E&P Tanks v3.0 |
| Benzene | 1900 | 0.214 | 0.939 | 0.00172 | 0.00751 | E&P Tanks v3.0 |
| Toluene | 1900 | 0.203 | 0.889 | 0.00162 | 0.00711 | E&P Tanks v3.0 |
| Ethylbenzene | 1900 | 0.0244 | 0.107 | 0.000195 | 0.000856 | E&P Tanks v3.0 |
| Xylenes | 1900 | 0.0916 | 0.401 | 0.000732 | 0.00321 | E&P Tanks v3.0 |
| n-Hexane | 1900 | 2.15 | 9.44 | 0.0172 | 0.0755 | E&P Tanks v3.0 |
| Total HAPs | | 2.69 | 11.8 | 0.0215 | 0.0942 | |

1 - Uncontrolled emissions were taken directly from the E&P Tanks v3.0 output. Grand Junction, CO was used for meteorological data in E&P Tanks simulation instead of Albuquerque, NM because its elevation and climate are more similar to the well site location.

2 - Reduced working/breathing and flash losses are calculated from the pre-VRU working/breathing and flash losses assuming the VRU's operate at 100% collection efficiency and worst case uptimes of 95% for the primary VRU and 60% for the secondary and tertiary VRU's to be conservative.

3 - Potential oil from produced water throughput based on the assumption that 5% of produced water throughput is oil.

4 - This vapor recovery tank is a process vessel rather than a storage vessel per the definition in §60.5430a and is therefore not subject to the requirements of NSPS 40 CFR 60 Subpart OOOOa.

**Tank Detail Sheet**

| | | | |
|---|---|---|---|
| Area | Chaco Slope | Tank Height | 20 ft |
| Equipment Source Name | TK-1 | Potential Operation | 8760 hr/yr |
| Number of Tanks | 1 of 15 | Potential Throughput | 92467 bbl/yr |
| Tank Capacity | 500 bbl (each) | Calendar Year | 2017 |
| Tank Contents | Post-Flash Oil Tank | | |
| VRU 1 Product Recovery Efficiency | 95% | | |

*Potential Emissions*

| Pollutant | Potential Throughput (bbl/yr) | Max Battery Potential Emissions | | | | Source of Emission Factor |
|---|---|---|---|---|---|---|
| | | Uncontrolled | | Controlled | | |
| | | (lb/hr) | (ton/yr) | (lb/hr) | (ton/yr) | |
| VOC | 92467 | 0.696 | 3.05 | 0.0348 | 0.152 | EPA TANKS 4.0.9d |
| Benzene | 92467 | 0.00102 | 0.00448 | 0.0000511 | 0.000224 | Engineering Calculation |
| Toluene | 92467 | 0.000931 | 0.00408 | 0.0000466 | 0.000204 | Engineering Calculation |
| Ethylbenzene | 92467 | 0.0000947 | 0.000415 | 0.00000473 | 0.0000207 | Engineering Calculation |
| Xylenes | 92467 | 0.000347 | 0.00152 | 0.0000174 | 0.0000760 | Engineering Calculation |
| n-Hexane | 92467 | 0.0160 | 0.0701 | 0.000801 | 0.00351 | Engineering Calculation |
| Total HAPs | | 0.0184 | 0.0806 | 0.000920 | 0.00403 | |

1 - Uncontrolled emissions were taken directly from the EPA TANKS 4.0.9d output.

2 - No HAP emissions are reported by EPA Tanks 4.0.9d; therefore, these emissions were estimated based on the ration of HAPs to total VOCs using a representative liquid sample.

3 - Reduced working/breathing and flash losses are calculated from the pre-VRU working/breathing and flash losses assuming the VRU operates at 100% collection efficiency per TCEQ guidance (See the cover letter) but at a worst-case 95% of the time, in accordance with NSPS OOOOa 60.5412(a), resulting in a net 95% product recovery efficiency.

**Tank Detail Sheet**

| | | | |
|---|---|---|---|
| Area | Chaco Slope | Tank Height | 20 ft |
| Equipment Source Name | TK-2 | Potential Operation | 8760 hr/yr |
| Number of Tanks | 2 of 15 | Potential Throughput | 92467 bbl/yr |
| Tank Capacity | 500 bbl (each) | Calendar Year | 2017 |
| Tank Contents | Post-Flash Oil Tank | | |
| VRU 1 Product Recovery Efficiency | 95% | | |

*Potential Emissions*

| Pollutant | Potential Throughput (bbl/yr) | Max Battery Potential Emissions | | | | Source of Emission Factor |
|---|---|---|---|---|---|---|
| | | Uncontrolled | | Controlled | | |
| | | (lb/hr) | (ton/yr) | (lb/hr) | (ton/yr) | |
| VOC | 92467 | 0.696 | 3.05 | 0.0348 | 0.152 | EPA TANKS 4.0.9d |
| Benzene | 92467 | 0.00102 | 0.00448 | 0.0000511 | 0.000224 | Engineering Calculation |
| Toluene | 92467 | 0.000931 | 0.00408 | 0.0000466 | 0.000204 | Engineering Calculation |
| Ethylbenzene | 92467 | 0.0000947 | 0.000415 | 0.00000473 | 0.0000207 | Engineering Calculation |
| Xylenes | 92467 | 0.000347 | 0.00152 | 0.0000174 | 0.0000760 | Engineering Calculation |
| n-Hexane | 92467 | 0.0160 | 0.0701 | 0.000801 | 0.00351 | Engineering Calculation |
| Total HAPs | | 0.0184 | 0.0806 | 0.000920 | 0.00403 | |

1 - Uncontrolled emissions were taken directly from the EPA TANKS 4.0.9d output.

2 - No HAP emissions are reported by EPA Tanks 4.0.9d; therefore, these emissions were estimated based on the ration of HAPs to total VOCs using a representative liquid sample.

3 - Reduced working/breathing and flash losses are calculated from the pre-VRU working/breathing and flash losses assuming the VRU operates at 100% collection efficiency per TCEQ guidance (See the cover letter) but at a worst-case 95% of the time, in accordance with NSPS OOOOa 60.5412(a), resulting in a net 95% product recovery efficiency.

**Tank Detail Sheet**

| | | | |
|---|---|---|---|
| Area | Chaco Slope | Tank Height | 20 ft |
| Equipment Source Name | TK-3 | Potential Operation | 8760 hr/yr |
| Number of Tanks | 3 of 15 | Potential Throughput | 92467 bbl/yr |
| Tank Capacity | 500 bbl (each) | Calendar Year | 2017 |
| Tank Contents | Post-Flash Oil Tank | | |
| VRU 1 Product Recovery Efficiency | 95% | | |

*Potential Emissions*

| Pollutant | Potential Throughput (bbl/yr) | Max Battery Potential Emissions | | | | Source of Emission Factor |
|---|---|---|---|---|---|---|
| | | Uncontrolled | | Controlled | | |
| | | (lb/hr) | (ton/yr) | (lb/hr) | (ton/yr) | |
| VOC | 92467 | 0.696 | 3.05 | 0.0348 | 0.152 | EPA TANKS 4.0.9d |
| Benzene | 92467 | 0.00102 | 0.00448 | 0.0000511 | 0.000224 | Engineering Calculation |
| Toluene | 92467 | 0.000931 | 0.00408 | 0.0000466 | 0.000204 | Engineering Calculation |
| Ethylbenzene | 92467 | 0.0000947 | 0.000415 | 0.00000473 | 0.0000207 | Engineering Calculation |
| Xylenes | 92467 | 0.000347 | 0.00152 | 0.0000174 | 0.0000760 | Engineering Calculation |
| n-Hexane | 92467 | 0.0160 | 0.0701 | 0.000801 | 0.00351 | Engineering Calculation |
| Total HAPs | | 0.0184 | 0.0806 | 0.000920 | 0.00403 | |

1 - Uncontrolled emissions were taken directly from the EPA TANKS 4.0.9d output.

2 - No HAP emissions are reported by EPA Tanks 4.0.9d; therefore, these emissions were estimated based on the ration of HAPs to total VOCs using a representative liquid sample.

3 - Reduced working/breathing and flash losses are calculated from the pre-VRU working/breathing and flash losses assuming the VRU operates at 100% collection efficiency per TCEQ guidance (See the cover letter) but at a worst-case 95% of the time, in accordance with NSPS OOOOa 60.5412(a), resulting in a net 95% product recovery efficiency.

**Tank Detail Sheet**

| | | | |
|---|---|---|---|
| Area | Chaco Slope | Tank Height | 20 ft |
| Equipment Source Name | TK-4 | Potential Operation | 8760 hr/yr |
| Number of Tanks | 4 of 15 | Potential Throughput | 92467 bbl/yr |
| Tank Capacity | 500 bbl (each) | Calendar Year | 2017 |
| Tank Contents | Post-Flash Oil Tank | | |
| VRU 1 Product Recovery Efficiency | 95% | | |

*Potential Emissions*

| Pollutant | Potential Throughput (bbl/yr) | Max Battery Potential Emissions | | | | Source of Emission Factor |
|---|---|---|---|---|---|---|
| | | Uncontrolled | | Controlled | | |
| | | (lb/hr) | (ton/yr) | (lb/hr) | (ton/yr) | |
| VOC | 92467 | 0.696 | 3.05 | 0.0348 | 0.152 | EPA TANKS 4.0.9d |
| Benzene | 92467 | 0.00102 | 0.00448 | 0.0000511 | 0.000224 | Engineering Calculation |
| Toluene | 92467 | 0.000931 | 0.00408 | 0.0000466 | 0.000204 | Engineering Calculation |
| Ethylbenzene | 92467 | 0.0000947 | 0.000415 | 0.00000473 | 0.0000207 | Engineering Calculation |
| Xylenes | 92467 | 0.000347 | 0.00152 | 0.0000174 | 0.0000760 | Engineering Calculation |
| n-Hexane | 92467 | 0.0160 | 0.0701 | 0.000801 | 0.00351 | Engineering Calculation |
| Total HAPs | | 0.0184 | 0.0806 | 0.000920 | 0.00403 | |

1 - Uncontrolled emissions were taken directly from the EPA TANKS 4.0.9d output.

2 - No HAP emissions are reported by EPA Tanks 4.0.9d; therefore, these emissions were estimated based on the ration of HAPs to total VOCs using a representative liquid sample.

3 - Reduced working/breathing and flash losses are calculated from the pre-VRU working/breathing and flash losses assuming the VRU operates at 100% collection efficiency per TCEQ guidance (See the cover letter) but at a worst-case 95% of the time, in accordance with NSPS OOOOa 60.5412(a), resulting in a net 95% product recovery efficiency.

**Tank Detail Sheet**

| | | | |
|---|---|---|---|
| Area | Chaco Slope | Tank Height | 20 ft |
| Equipment Source Name | TK-5 | Potential Operation | 8760 hr/yr |
| Number of Tanks | 5 of 15 | Potential Throughput | 92467 bbl/yr |
| Tank Capacity | 500 bbl (each) | Calendar Year | 2017 |
| Tank Contents | Post-Flash Oil Tank | | |
| VRU 1 Product Recovery Efficiency | 95% | | |

*Potential Emissions*

| Pollutant | Potential Throughput (bbl/yr) | Max Battery Potential Emissions | | | | Source of Emission Factor |
|---|---|---|---|---|---|---|
| | | Uncontrolled | | Controlled | | |
| | | (lb/hr) | (ton/yr) | (lb/hr) | (ton/yr) | |
| VOC | 92467 | 0.696 | 3.05 | 0.0348 | 0.152 | EPA TANKS 4.0.9d |
| Benzene | 92467 | 0.00102 | 0.00448 | 0.0000511 | 0.000224 | Engineering Calculation |
| Toluene | 92467 | 0.000931 | 0.00408 | 0.0000466 | 0.000204 | Engineering Calculation |
| Ethylbenzene | 92467 | 0.0000947 | 0.000415 | 0.00000473 | 0.0000207 | Engineering Calculation |
| Xylenes | 92467 | 0.000347 | 0.00152 | 0.0000174 | 0.0000760 | Engineering Calculation |
| n-Hexane | 92467 | 0.0160 | 0.0701 | 0.000801 | 0.00351 | Engineering Calculation |
| Total HAPs | | 0.0184 | 0.0806 | 0.000920 | 0.00403 | |

1 - Uncontrolled emissions were taken directly from the EPA TANKS 4.0.9d output.

2 - No HAP emissions are reported by EPA Tanks 4.0.9d; therefore, these emissions were estimated based on the ration of HAPs to total VOCs using a representative liquid sample.

3 - Reduced working/breathing and flash losses are calculated from the pre-VRU working/breathing and flash losses assuming the VRU operates at 100% collection efficiency per TCEQ guidance (See the cover letter) but at a worst-case 95% of the time, in accordance with NSPS OOOOa 60.5412(a), resulting in a net 95% product recovery efficiency.

**Tank Detail Sheet**

| | | | |
|---|---|---|---|
| Area | Chaco Slope | Tank Height | 20 ft |
| Equipment Source Name | TK-6 | Potential Operation | 8760 hr/yr |
| Number of Tanks | 6 of 15 | Potential Throughput | 92467 bbl/yr |
| Tank Capacity | 500 bbl (each) | Calendar Year | 2017 |
| Tank Contents | Post-Flash Oil Tank | | |
| VRU 1 Product Recovery Efficiency | 95% | | |

*Potential Emissions*

| Pollutant | Potential Throughput (bbl/yr) | Max Battery Potential Emissions | | | | Source of Emission Factor |
|---|---|---|---|---|---|---|
| | | Uncontrolled | | Controlled | | |
| | | (lb/hr) | (ton/yr) | (lb/hr) | (ton/yr) | |
| VOC | 92467 | 0.696 | 3.05 | 0.0348 | 0.152 | EPA TANKS 4.0.9d |
| Benzene | 92467 | 0.00102 | 0.00448 | 0.0000511 | 0.000224 | Engineering Calculation |
| Toluene | 92467 | 0.000931 | 0.00408 | 0.0000466 | 0.000204 | Engineering Calculation |
| Ethylbenzene | 92467 | 0.0000947 | 0.000415 | 0.00000473 | 0.0000207 | Engineering Calculation |
| Xylenes | 92467 | 0.000347 | 0.00152 | 0.0000174 | 0.0000760 | Engineering Calculation |
| n-Hexane | 92467 | 0.0160 | 0.0701 | 0.000801 | 0.00351 | Engineering Calculation |
| Total HAPs | | 0.0184 | 0.0806 | 0.000920 | 0.00403 | |

1 - Uncontrolled emissions were taken directly from the EPA TANKS 4.0.9d output.

2 - No HAP emissions are reported by EPA Tanks 4.0.9d; therefore, these emissions were estimated based on the ration of HAPs to total VOCs using a representative liquid sample.

3 - Reduced working/breathing and flash losses are calculated from the pre-VRU working/breathing and flash losses assuming the VRU operates at 100% collection efficiency per TCEQ guidance (See the cover letter) but at a worst-case 95% of the time, in accordance with NSPS OOOOa 60.5412(a), resulting in a net 95% product recovery efficiency.

**Tank Detail Sheet**

| | | | |
|---|---|---|---|
| Area | Chaco Slope | Tank Height | 20 ft |
| Equipment Source Name | TK-7 | Potential Operation | 8760 hr/yr |
| Number of Tanks | 7 of 15 | Potential Throughput | 92467 bbl/yr |
| Tank Capacity | 500 bbl (each) | Calendar Year | 2017 |
| Tank Contents | Post-Flash Oil Tank | | |
| VRU 1 Product Recovery Efficiency | 95% | | |

*Potential Emissions*

| Pollutant | Potential Throughput (bbl/yr) | Max Battery Potential Emissions | | | | Source of Emission Factor |
|---|---|---|---|---|---|---|
| | | Uncontrolled | | Controlled | | |
| | | (lb/hr) | (ton/yr) | (lb/hr) | (ton/yr) | |
| VOC | 92467 | 0.696 | 3.05 | 0.0348 | 0.152 | EPA TANKS 4.0.9d |
| Benzene | 92467 | 0.00102 | 0.00448 | 0.0000511 | 0.000224 | Engineering Calculation |
| Toluene | 92467 | 0.000931 | 0.00408 | 0.0000466 | 0.000204 | Engineering Calculation |
| Ethylbenzene | 92467 | 0.0000947 | 0.000415 | 0.00000473 | 0.0000207 | Engineering Calculation |
| Xylenes | 92467 | 0.000347 | 0.00152 | 0.0000174 | 0.0000760 | Engineering Calculation |
| n-Hexane | 92467 | 0.0160 | 0.0701 | 0.000801 | 0.00351 | Engineering Calculation |
| Total HAPs | | 0.0184 | 0.0806 | 0.000920 | 0.00403 | |

1 - Uncontrolled emissions were taken directly from the EPA TANKS 4.0.9d output.

2 - No HAP emissions are reported by EPA Tanks 4.0.9d; therefore, these emissions were estimated based on the ration of HAPs to total VOCs using a representative liquid sample.

3 - Reduced working/breathing and flash losses are calculated from the pre-VRU working/breathing and flash losses assuming the VRU operates at 100% collection efficiency per TCEQ guidance (See the cover letter) but at a worst-case 95% of the time, in accordance with NSPS OOOOa 60.5412(a), resulting in a net 95% product recovery efficiency.

**Tank Detail Sheet**

| | | | |
|---|---|---|---|
| Area | Chaco Slope | Tank Height | 20 ft |
| Equipment Source Name | TK-8 | Potential Operation | 8760 hr/yr |
| Number of Tanks | 8 of 15 | Potential Throughput | 92467 bbl/yr |
| Tank Capacity | 500 bbl (each) | Calendar Year | 2017 |
| Tank Contents | Post-Flash Oil Tank | | |
| VRU 1 Product Recovery Efficiency | 95% | | |

*Potential Emissions*

| Pollutant | Potential Throughput (bbl/yr) | Max Battery Potential Emissions | | | | Source of Emission Factor |
|---|---|---|---|---|---|---|
| | | Uncontrolled | | Controlled | | |
| | | (lb/hr) | (ton/yr) | (lb/hr) | (ton/yr) | |
| VOC | 92467 | 0.696 | 3.05 | 0.0348 | 0.152 | EPA TANKS 4.0.9d |
| Benzene | 92467 | 0.00102 | 0.00448 | 0.0000511 | 0.000224 | Engineering Calculation |
| Toluene | 92467 | 0.000931 | 0.00408 | 0.0000466 | 0.000204 | Engineering Calculation |
| Ethylbenzene | 92467 | 0.0000947 | 0.000415 | 0.00000473 | 0.0000207 | Engineering Calculation |
| Xylenes | 92467 | 0.000347 | 0.00152 | 0.0000174 | 0.0000760 | Engineering Calculation |
| n-Hexane | 92467 | 0.0160 | 0.0701 | 0.000801 | 0.00351 | Engineering Calculation |
| Total HAPs | | 0.0184 | 0.0806 | 0.000920 | 0.00403 | |

1 - Uncontrolled emissions were taken directly from the EPA TANKS 4.0.9d output.

2 - No HAP emissions are reported by EPA Tanks 4.0.9d; therefore, these emissions were estimated based on the ration of HAPs to total VOCs using a representative liquid sample.

3 - Reduced working/breathing and flash losses are calculated from the pre-VRU working/breathing and flash losses assuming the VRU operates at 100% collection efficiency per TCEQ guidance (See the cover letter) but at a worst-case 95% of the time, in accordance with NSPS OOOOa 60.5412(a), resulting in a net 95% product recovery efficiency.

**Tank Detail Sheet**

| | | | |
|---|---|---|---|
| Area | Chaco Slope | Tank Height | 20 ft |
| Equipment Source Name | TK-9 | Potential Operation | 8760 hr/yr |
| Number of Tanks | 9 of 15 | Potential Throughput | 92467 bbl/yr |
| Tank Capacity | 500 bbl (each) | Calendar Year | 2017 |
| Tank Contents | Post-Flash Oil Tank | | |
| VRU 1 Product Recovery Efficiency | 95% | | |

*Potential Emissions*

| Pollutant | Potential Throughput (bbl/yr) | Max Battery Potential Emissions | | | | Source of Emission Factor |
|---|---|---|---|---|---|---|
| | | Uncontrolled | | Controlled | | |
| | | (lb/hr) | (ton/yr) | (lb/hr) | (ton/yr) | |
| VOC | 92467 | 0.696 | 3.05 | 0.0348 | 0.152 | EPA TANKS 4.0.9d |
| Benzene | 92467 | 0.00102 | 0.00448 | 0.0000511 | 0.000224 | Engineering Calculation |
| Toluene | 92467 | 0.000931 | 0.00408 | 0.0000466 | 0.000204 | Engineering Calculation |
| Ethylbenzene | 92467 | 0.0000947 | 0.000415 | 0.00000473 | 0.0000207 | Engineering Calculation |
| Xylenes | 92467 | 0.000347 | 0.00152 | 0.0000174 | 0.0000760 | Engineering Calculation |
| n-Hexane | 92467 | 0.0160 | 0.0701 | 0.000801 | 0.00351 | Engineering Calculation |
| Total HAPs | | 0.0184 | 0.0806 | 0.000920 | 0.00403 | |

1 - Uncontrolled emissions were taken directly from the EPA TANKS 4.0.9d output.

2 - No HAP emissions are reported by EPA Tanks 4.0.9d; therefore, these emissions were estimated based on the ration of HAPs to total VOCs using a representative liquid sample.

3 - Reduced working/breathing and flash losses are calculated from the pre-VRU working/breathing and flash losses assuming the VRU operates at 100% collection efficiency per TCEQ guidance (See the cover letter) but at a worst-case 95% of the time, in accordance with NSPS OOOOa 60.5412(a), resulting in a net 95% product recovery efficiency.

**Tank Detail Sheet**

| | | | |
|---|---|---|---|
| Area | Chaco Slope | Tank Height | 20 ft |
| Equipment Source Name | TK-10 | Potential Operation | 8760 hr/yr |
| Number of Tanks | 10 of 15 | Potential Throughput | 92467 bbl/yr |
| Tank Capacity | 500 bbl (each) | Calendar Year | 2017 |
| Tank Contents | Post-Flash Oil Tank | | |
| VRU 1 Product Recovery Efficiency | 95% | | |

*Potential Emissions*

| Pollutant | Potential Throughput (bbl/yr) | Max Battery Potential Emissions | | | | Source of Emission Factor |
|---|---|---|---|---|---|---|
| | | Uncontrolled | | Controlled | | |
| | | (lb/hr) | (ton/yr) | (lb/hr) | (ton/yr) | |
| VOC | 92467 | 0.696 | 3.05 | 0.0348 | 0.152 | EPA TANKS 4.0.9d |
| Benzene | 92467 | 0.00102 | 0.00448 | 0.0000511 | 0.000224 | Engineering Calculation |
| Toluene | 92467 | 0.000931 | 0.00408 | 0.0000466 | 0.000204 | Engineering Calculation |
| Ethylbenzene | 92467 | 0.0000947 | 0.000415 | 0.00000473 | 0.0000207 | Engineering Calculation |
| Xylenes | 92467 | 0.000347 | 0.00152 | 0.0000174 | 0.0000760 | Engineering Calculation |
| n-Hexane | 92467 | 0.0160 | 0.0701 | 0.000801 | 0.00351 | Engineering Calculation |
| Total HAPs | | 0.0184 | 0.0806 | 0.000920 | 0.00403 | |

1 - Uncontrolled emissions were taken directly from the EPA TANKS 4.0.9d output.

2 - No HAP emissions are reported by EPA Tanks 4.0.9d; therefore, these emissions were estimated based on the ration of HAPs to total VOCs using a representative liquid sample.

3 - Reduced working/breathing and flash losses are calculated from the pre-VRU working/breathing and flash losses assuming the VRU operates at 100% collection efficiency per TCEQ guidance (See the cover letter) but at a worst-case 95% of the time, in accordance with NSPS OOOOa 60.5412(a), resulting in a net 95% product recovery efficiency.

**Tank Detail Sheet**

| | | | |
|---|---|---|---|
| Area | Chaco Slope | Tank Height | 20 ft |
| Equipment Source Name | TK-11 | Potential Operation | 8760 hr/yr |
| Number of Tanks | 11 of 15 | Potential Throughput | 92467 bbl/yr |
| Tank Capacity | 500 bbl (each) | Calendar Year | 2017 |
| Tank Contents | Post-Flash Oil Tank | | |
| VRU 1 Product Recovery Efficiency | 95% | | |

*Potential Emissions*

| Pollutant | Potential Throughput (bbl/yr) | Max Battery Potential Emissions | | | | Source of Emission Factor |
|---|---|---|---|---|---|---|
| | | Uncontrolled | | Controlled | | |
| | | (lb/hr) | (ton/yr) | (lb/hr) | (ton/yr) | |
| VOC | 92467 | 0.696 | 3.05 | 0.0348 | 0.152 | EPA TANKS 4.0.9d |
| Benzene | 92467 | 0.00102 | 0.00448 | 0.0000511 | 0.000224 | Engineering Calculation |
| Toluene | 92467 | 0.000931 | 0.00408 | 0.0000466 | 0.000204 | Engineering Calculation |
| Ethylbenzene | 92467 | 0.0000947 | 0.000415 | 0.00000473 | 0.0000207 | Engineering Calculation |
| Xylenes | 92467 | 0.000347 | 0.00152 | 0.0000174 | 0.0000760 | Engineering Calculation |
| n-Hexane | 92467 | 0.0160 | 0.0701 | 0.000801 | 0.00351 | Engineering Calculation |
| Total HAPs | | 0.0184 | 0.0806 | 0.000920 | 0.00403 | |

1 - Uncontrolled emissions were taken directly from the EPA TANKS 4.0.9d output.

2 - No HAP emissions are reported by EPA Tanks 4.0.9d; therefore, these emissions were estimated based on the ration of HAPs to total VOCs using a representative liquid sample.

3 - Reduced working/breathing and flash losses are calculated from the pre-VRU working/breathing and flash losses assuming the VRU operates at 100% collection efficiency per TCEQ guidance (See the cover letter) but at a worst-case 95% of the time, in accordance with NSPS OOOOa 60.5412(a), resulting in a net 95% product recovery efficiency.

**Tank Detail Sheet**

| | | | |
|---|---|---|---|
| Area | Chaco Slope | Tank Height | 20 ft |
| Equipment Source Name | TK-12 | Potential Operation | 8760 hr/yr |
| Number of Tanks | 12 of 15 | Potential Throughput | 92467 bbl/yr |
| Tank Capacity | 500 bbl (each) | Calendar Year | 2017 |
| Tank Contents | Post-Flash Oil Tank | | |
| VRU 1 Product Recovery Efficiency | 95% | | |

*Potential Emissions*

| Pollutant | Potential Throughput (bbl/yr) | Max Battery Potential Emissions | | | | Source of Emission Factor |
|---|---|---|---|---|---|---|
| | | Uncontrolled | | Controlled | | |
| | | (lb/hr) | (ton/yr) | (lb/hr) | (ton/yr) | |
| VOC | 92467 | 0.696 | 3.05 | 0.0348 | 0.152 | EPA TANKS 4.0.9d |
| Benzene | 92467 | 0.00102 | 0.00448 | 0.0000511 | 0.000224 | Engineering Calculation |
| Toluene | 92467 | 0.000931 | 0.00408 | 0.0000466 | 0.000204 | Engineering Calculation |
| Ethylbenzene | 92467 | 0.0000947 | 0.000415 | 0.00000473 | 0.0000207 | Engineering Calculation |
| Xylenes | 92467 | 0.000347 | 0.00152 | 0.0000174 | 0.0000760 | Engineering Calculation |
| n-Hexane | 92467 | 0.0160 | 0.0701 | 0.000801 | 0.00351 | Engineering Calculation |
| Total HAPs | | 0.0184 | 0.0806 | 0.000920 | 0.00403 | |

1 - Uncontrolled emissions were taken directly from the EPA TANKS 4.0.9d output.

2 - No HAP emissions are reported by EPA Tanks 4.0.9d; therefore, these emissions were estimated based on the ration of HAPs to total VOCs using a representative liquid sample.

3 - Reduced working/breathing and flash losses are calculated from the pre-VRU working/breathing and flash losses assuming the VRU operates at 100% collection efficiency per TCEQ guidance (See the cover letter) but at a worst-case 95% of the time, in accordance with NSPS OOOOa 60.5412(a), resulting in a net 95% product recovery efficiency.

**Tank Detail Sheet**

| | | | |
|---|---|---|---|
| Area | Chaco Slope | Tank Height | 20 ft |
| Equipment Source Name | TK-13 | Potential Operation | 8760 hr/yr |
| Number of Tanks | 13 of 15 | Potential Throughput | 92467 bbl/yr |
| Tank Capacity | 500 bbl (each) | Calendar Year | 2017 |
| Tank Contents | Post-Flash Oil Tank | | |
| VRU 1 Product Recovery Efficiency | 95% | | |

*Potential Emissions*

| Pollutant | Potential Throughput (bbl/yr) | Max Battery Potential Emissions | | | | Source of Emission Factor |
|---|---|---|---|---|---|---|
| | | Uncontrolled | | Controlled | | |
| | | (lb/hr) | (ton/yr) | (lb/hr) | (ton/yr) | |
| VOC | 92467 | 0.696 | 3.05 | 0.0348 | 0.152 | EPA TANKS 4.0.9d |
| Benzene | 92467 | 0.00102 | 0.00448 | 0.0000511 | 0.000224 | Engineering Calculation |
| Toluene | 92467 | 0.000931 | 0.00408 | 0.0000466 | 0.000204 | Engineering Calculation |
| Ethylbenzene | 92467 | 0.0000947 | 0.000415 | 0.00000473 | 0.0000207 | Engineering Calculation |
| Xylenes | 92467 | 0.000347 | 0.00152 | 0.0000174 | 0.0000760 | Engineering Calculation |
| n-Hexane | 92467 | 0.0160 | 0.0701 | 0.000801 | 0.00351 | Engineering Calculation |
| Total HAPs | | 0.0184 | 0.0806 | 0.000920 | 0.00403 | |

1 - Uncontrolled emissions were taken directly from the EPA TANKS 4.0.9d output.

2 - No HAP emissions are reported by EPA Tanks 4.0.9d; therefore, these emissions were estimated based on the ration of HAPs to total VOCs using a representative liquid sample.

3 - Reduced working/breathing and flash losses are calculated from the pre-VRU working/breathing and flash losses assuming the VRU operates at 100% collection efficiency per TCEQ guidance (See the cover letter) but at a worst-case 95% of the time, in accordance with NSPS OOOOa 60.5412(a), resulting in a net 95% product recovery efficiency.

**Tank Detail Sheet**

| | | | |
|---|---|---|---|
| Area | Chaco Slope | Tank Height | 20 ft |
| Equipment Source Name | TK-14 | Potential Operation | 8760 hr/yr |
| Number of Tanks | 14 of 15 | Potential Throughput | 92467 bbl/yr |
| Tank Capacity | 500 bbl (each) | Calendar Year | 2017 |
| Tank Contents | Post-Flash Oil Tank | | |
| VRU 1 Product Recovery Efficiency | 95% | | |

*Potential Emissions*

| Pollutant | Potential Throughput (bbl/yr) | Max Battery Potential Emissions | | | | Source of Emission Factor |
|---|---|---|---|---|---|---|
| | | Uncontrolled | | Controlled | | |
| | | (lb/hr) | (ton/yr) | (lb/hr) | (ton/yr) | |
| VOC | 92467 | 0.696 | 3.05 | 0.0348 | 0.152 | EPA TANKS 4.0.9d |
| Benzene | 92467 | 0.00102 | 0.00448 | 0.0000511 | 0.000224 | Engineering Calculation |
| Toluene | 92467 | 0.000931 | 0.00408 | 0.0000466 | 0.000204 | Engineering Calculation |
| Ethylbenzene | 92467 | 0.0000947 | 0.000415 | 0.00000473 | 0.0000207 | Engineering Calculation |
| Xylenes | 92467 | 0.000347 | 0.00152 | 0.0000174 | 0.0000760 | Engineering Calculation |
| n-Hexane | 92467 | 0.0160 | 0.0701 | 0.000801 | 0.00351 | Engineering Calculation |
| Total HAPs | | 0.0184 | 0.0806 | 0.000920 | 0.00403 | |

1 - Uncontrolled emissions were taken directly from the EPA TANKS 4.0.9d output.

2 - No HAP emissions are reported by EPA Tanks 4.0.9d; therefore, these emissions were estimated based on the ration of HAPs to total VOCs using a representative liquid sample.

3 - Reduced working/breathing and flash losses are calculated from the pre-VRU working/breathing and flash losses assuming the VRU operates at 100% collection efficiency per TCEQ guidance (See the cover letter) but at a worst-case 95% of the time, in accordance with NSPS OOOOa 60.5412(a), resulting in a net 95% product recovery efficiency.

**Tank Detail Sheet**

| | | | |
|---|---|---|---|
| Area | Chaco Slope | Tank Height | 20 ft |
| Equipment Source Name | TK-15 | Potential Operation | 8760 hr/yr |
| Number of Tanks | 15 of 15 | Potential Throughput | 92467 bbl/yr |
| Tank Capacity | 500 bbl (each) | Calendar Year | 2017 |
| Tank Contents | Post-Flash Oil Tank | | |
| VRU 1 Product Recovery Efficiency | 95% | | |

*Potential Emissions*

| Pollutant | Potential Throughput (bbl/yr) | Max Battery Potential Emissions | | | | Source of Emission Factor |
|---|---|---|---|---|---|---|
| | | Uncontrolled | | Controlled | | |
| | | (lb/hr) | (ton/yr) | (lb/hr) | (ton/yr) | |
| VOC | 92467 | 0.696 | 3.05 | 0.0348 | 0.152 | EPA TANKS 4.0.9d |
| Benzene | 92467 | 0.00102 | 0.00448 | 0.0000511 | 0.000224 | Engineering Calculation |
| Toluene | 92467 | 0.000931 | 0.00408 | 0.0000466 | 0.000204 | Engineering Calculation |
| Ethylbenzene | 92467 | 0.0000947 | 0.000415 | 0.00000473 | 0.0000207 | Engineering Calculation |
| Xylenes | 92467 | 0.000347 | 0.00152 | 0.0000174 | 0.0000760 | Engineering Calculation |
| n-Hexane | 92467 | 0.0160 | 0.0701 | 0.000801 | 0.00351 | Engineering Calculation |
| Total HAPs | | 0.0184 | 0.0806 | 0.000920 | 0.00403 | |

1 - Uncontrolled emissions were taken directly from the EPA TANKS 4.0.9d output.

2 - No HAP emissions are reported by EPA Tanks 4.0.9d; therefore, these emissions were estimated based on the ration of HAPs to total VOCs using a representative liquid sample.

3 - Reduced working/breathing and flash losses are calculated from the pre-VRU working/breathing and flash losses assuming the VRU operates at 100% collection efficiency per TCEQ guidance (See the cover letter) but at a worst-case 95% of the time, in accordance with NSPS OOOOa 60.5412(a), resulting in a net 95% product recovery efficiency.

**Tank Detail Sheet**

| | | | |
|---|---|---|---|
| Area | Chaco Slope | Tank Height | 20 ft |
| Equipment Source Name | PWTK-1 | Potential Operation | 8760 hr/yr |
| Number of Tanks | 1 of 2 | Potential Throughput | 365000 bbl/yr |
| Tank Capacity | 500 bbl (each) | Calendar Year | 2017 |
| Tank Contents | Post-Flash PW Tank | | |
| VRU 1 Product Recovery Efficiency | 95% | | |

*Potential Emissions*

| Pollutant | Potential Throughput (bbl/yr) | Max Battery Potential Emissions | | | | Source of Emission Factor |
|---|---|---|---|---|---|---|
| | | Uncontrolled | | Controlled | | |
| | | (lb/hr) | (ton/yr) | (lb/hr) | (ton/yr) | |
| VOC | 365000 | 0.00858 | 0.0376 | 0.000429 | 0.00188 | EPA TANKS 4.0.9d |
| Benzene | 365000 | 0.0000521 | 0.000228 | 0.00000261 | 0.0000114 | Engineering Calculation |
| Toluene | 365000 | 0.0000812 | 0.000356 | 0.00000406 | 0.0000178 | Engineering Calculation |
| Ethylbenzene | 365000 | 0.00000506 | 0.0000222 | 0.000000253 | 0.00000111 | Engineering Calculation |
| Xylenes | 365000 | 0.0000380 | 0.000166 | 0.00000190 | 0.00000831 | Engineering Calculation |
| n-Hexane | 365000 | 0.0000288 | 0.000126 | 0.00000144 | 0.00000630 | Engineering Calculation |
| Total HAPs | | 0.000205 | 0.000898 | 0.0000103 | 0.0000449 | |

**NOTES:**

1 - Produced water potential throughput rate assumed to be 250 bbl/d/well.

2 - Uncontrolled VOC emissions were taken directly from the EPA TANKS 4.0.9d output.

3 - No HAP emissions are reported by EPA Tanks 4.0.9d; therefore, these emissions were estimated based on the ration of HAPs to total VOCs using a representative liquid sample.

4 - Reduced working/breathing and flash losses are calculated from the pre-VRU working/breathing and flash losses assuming the VRU operates at 100% collection efficiency per TCEQ guidance (See the cover letter) but at a worst-case 95% of the time, in accordance with NSPS OOOOa 60.5412(a), resulting in a net 95% product recovery efficiency.

**Tank Detail Sheet**

| | | | |
|---|---|---|---|
| Area | Chaco Slope | Tank Height | 20 ft |
| Equipment Source Name | PWTK-2 | Potential Operation | 8760 hr/yr |
| Number of Tanks | 2 of 2 | Potential Throughput | 365000 bbl/yr |
| Tank Capacity | 500 bbl (each) | Calendar Year | 2017 |
| Tank Contents | Post-Flash PW Tank | | |
| VRU 1 Product Recovery Efficiency | 95% | | |

*Potential Emissions*

| Pollutant | Potential Throughput (bbl/yr) | Max Battery Potential Emissions | | | | Source of Emission Factor |
|---|---|---|---|---|---|---|
| | | Uncontrolled | | Controlled | | |
| | | (lb/hr) | (ton/yr) | (lb/hr) | (ton/yr) | |
| VOC | 365000 | 0.00858 | 0.0376 | 0.000429 | 0.00188 | EPA TANKS 4.0.9d |
| Benzene | 365000 | 0.0000521 | 0.000228 | 0.00000261 | 0.0000114 | Engineering Calculation |
| Toluene | 365000 | 0.0000812 | 0.000356 | 0.00000406 | 0.0000178 | Engineering Calculation |
| Ethylbenzene | 365000 | 0.00000506 | 0.0000222 | 0.000000253 | 0.00000111 | Engineering Calculation |
| Xylenes | 365000 | 0.0000380 | 0.000166 | 0.00000190 | 0.00000831 | Engineering Calculation |
| n-Hexane | 365000 | 0.0000288 | 0.000126 | 0.00000144 | 0.00000630 | Engineering Calculation |
| Total HAPs | | 0.000205 | 0.000898 | 0.0000103 | 0.0000449 | |

**NOTES:**

1 - Produced water potential throughput rate assumed to be 250 bbl/d/well.

2 - Uncontrolled VOC emissions were taken directly from the EPA TANKS 4.0.9d output.

3 - No HAP emissions are reported by EPA Tanks 4.0.9d; therefore, these emissions were estimated based on the ration of HAPs to total VOCs using a representative liquid sample.

4 - Reduced working/breathing and flash losses are calculated from the pre-VRU working/breathing and flash losses assuming the VRU operates at 100% collection efficiency per TCEQ guidance (See the cover letter) but at a worst-case 95% of the time, in accordance with NSPS OOOOa 60.5412(a), resulting in a net 95% product recovery efficiency.

**Heater / Boiler Detail Sheet**

| | | | | |
|---|---|---|---|---|
| Equipment Source Name | HT-1 | | | |
| Source Description | Separator Heater | | | |
| Equipment Usage | Separator Heater | | Potential operation | 8760 hr/yr |
| Equipment Make | Shurefire | | | |
| Equipment Model | TBD | | Potential fuel usage | 10.74 MMscf/yr |
| Serial Number | TBD | | | |
| Number of Heaters | 1 of 4 | | | |
| Emission Controls | None | | | |
| Fuel Heating Value | 1020 | Btu/scf | Gas Analysis | |
| Heat Rate | 1.250 | MMBtu/hr | | |
| Sulfur Content | 0.0 | grains S/MMscf | Gas Analysis | |

***Potential Emissions***

| Pollutant | Emission Factor (lb/MMscf) | Nominal Rating (MMBtu/hr) | Hrs of Operation (hrs/yr) | Estimated Emissions (lb/hr) | Estimated Emissions (tpy) | Source of Emission Factor |
|---|---|---|---|---|---|---|
| NOx | 100 | 1.250 | 8760 | 0.12255 | 0.53676 | AP-42 Table 1.4-1 |
| CO | 84 | 1.250 | 8760 | 0.10294 | 0.45088 | AP-42 Table 1.4-1 |
| VOC | 5.5 | 1.250 | 8760 | 0.00674 | 0.02952 | AP-42 Table 1.4-2 |
| SOx | 0.6 | 1.250 | 8760 | 0.00000 | 0.00000 | AP-42 Table 1.4-2 |
| PM10 | 7.6 | 1.250 | 8760 | 0.00931 | 0.04079 | AP-42 Table 1.4-2 |
| Benzene | 0.0021 | 1.250 | 8760 | 0.00000 | 0.00001 | AP-42 Table 1.4-3 |
| n-Hexane | 1.80 | 1.250 | 8760 | 0.00221 | 0.00966 | AP-42 Table 1.4-3 |
| Toluene | 0.0034 | 1.250 | 8760 | 0.00000 | 0.00002 | AP-42 Table 1.4-3 |
| $CH_2O$ | 0.075 | 1.250 | 8760 | 0.00009 | 0.00040 | AP-42 Table 1.4-3 |
| Total HAPs | | | | 0.00230 | 0.01009 | |

**Sample Calculation for NOx**

100 lb/MMscf / 1020.00 Btu/scf * 1.250 MMBtu/hr = 0.12255 lb/hr

**Heater / Boiler Detail Sheet**

| | | | | | |
|---|---|---|---|---|---|
| Equipment Source Name | HT-2 | | | | |
| Source Description | Separator Heater | | | | |
| Equipment Usage | Separator Heater | | Potential operation | 8760 | hr/yr |
| Equipment Make | Shurefire | | | | |
| Equipment Model | TBD | | Potential fuel usage | 10.74 | MMscf/yr |
| Serial Number | TBD | | | | |
| Number of Heaters | 2 of 4 | | | | |
| Emission Controls | None | | | | |
| Fuel Heating Value | 1020 | Btu/scf | Gas Analysis | | |
| Heat Rate | 1.250 | MMBtu/hr | | | |
| Sulfur Content | 0.0 | grains S/MMscf | Gas Analysis | | |

***Potential Emissions***

| Pollutant | Emission Factor (lb/MMscf) | Nominal Rating (MMBtu/hr) | Hrs of Operation (hrs/yr) | Estimated Emissions (lb/hr) | Estimated Emissions (tpy) | Source of Emission Factor |
|---|---|---|---|---|---|---|
| NOx | 100 | 1.250 | 8760 | 0.12255 | 0.53676 | AP-42 Table 1.4-1 |
| CO | 84 | 1.250 | 8760 | 0.10294 | 0.45088 | AP-42 Table 1.4-1 |
| VOC | 5.5 | 1.250 | 8760 | 0.00674 | 0.02952 | AP-42 Table 1.4-2 |
| SOx | 0.6 | 1.250 | 8760 | 0.00000 | 0.00000 | AP-42 Table 1.4-2 |
| PM10 | 7.6 | 1.250 | 8760 | 0.00931 | 0.04079 | AP-42 Table 1.4-2 |
| Benzene | 0.0021 | 1.250 | 8760 | 0.00000 | 0.00001 | AP-42 Table 1.4-3 |
| n-Hexane | 1.80 | 1.250 | 8760 | 0.00221 | 0.00966 | AP-42 Table 1.4-3 |
| Toluene | 0.0034 | 1.250 | 8760 | 0.00000 | 0.00002 | AP-42 Table 1.4-3 |
| $CH_2O$ | 0.075 | 1.250 | 8760 | 0.00009 | 0.00040 | AP-42 Table 1.4-3 |
| Total HAPs | | | | 0.00230 | 0.01009 | |

**Sample Calculation for NOx**

100 lb/MMscf / 1020.00 Btu/scf * 1.250 MMBtu/hr = 0.12255 lb/hr

**Heater / Boiler Detail Sheet**

| | | | | | |
|---|---|---|---|---|---|
| Equipment Source Name | HT-3 | | | | |
| Source Description | Separator Heater | | | | |
| Equipment Usage | Separator Heater | | Potential operation | 8760 | hr/yr |
| Equipment Make | Shurefire | | | | |
| Equipment Model | TBD | | Potential fuel usage | 10.74 | MMscf/yr |
| Serial Number | TBD | | | | |
| Number of Heaters | 3 of 4 | | | | |
| Emission Controls | None | | | | |
| Fuel Heating Value | 1020 | Btu/scf | Gas Analysis | | |
| Heat Rate | 1.250 | MMBtu/hr | | | |
| Sulfur Content | 0.0 | grains S/MMscf | Gas Analysis | | |

***Potential Emissions***

| Pollutant | Emission Factor (lb/MMscf) | Nominal Rating (MMBtu/hr) | Hrs of Operation (hrs/yr) | Estimated Emissions (lb/hr) | Estimated Emissions (tpy) | Source of Emission Factor |
|---|---|---|---|---|---|---|
| NOx | 100 | 1.250 | 8760 | 0.12255 | 0.53676 | AP-42 Table 1.4-1 |
| CO | 84 | 1.250 | 8760 | 0.10294 | 0.45088 | AP-42 Table 1.4-1 |
| VOC | 5.5 | 1.250 | 8760 | 0.00674 | 0.02952 | AP-42 Table 1.4-2 |
| SOx | 0.6 | 1.250 | 8760 | 0.00000 | 0.00000 | AP-42 Table 1.4-2 |
| PM10 | 7.6 | 1.250 | 8760 | 0.00931 | 0.04079 | AP-42 Table 1.4-2 |
| Benzene | 0.0021 | 1.250 | 8760 | 0.00000 | 0.00001 | AP-42 Table 1.4-3 |
| n-Hexane | 1.80 | 1.250 | 8760 | 0.00221 | 0.00966 | AP-42 Table 1.4-3 |
| Toluene | 0.0034 | 1.250 | 8760 | 0.00000 | 0.00002 | AP-42 Table 1.4-3 |
| $CH_2O$ | 0.075 | 1.250 | 8760 | 0.00009 | 0.00040 | AP-42 Table 1.4-3 |
| Total HAPs | | | | 0.00230 | 0.01009 | |

**Sample Calculation for NOx**

100 lb/MMscf / 1020.00 Btu/scf * 1.250 MMBtu/hr = 0.12255 lb/hr

**Heater / Boiler Detail Sheet**

| | | | | | |
|---|---|---|---|---|---|
| Equipment Source Name | HT-4 | | | | |
| Source Description | Separator Heater | | | | |
| Equipment Usage | Separator Heater | | Potential operation | 8760 | hr/yr |
| Equipment Make | Shurefire | | | | |
| Equipment Model | TBD | | Potential fuel usage | 10.74 | MMscf/yr |
| Serial Number | TBD | | | | |
| Number of Heaters | 4 of 4 | | | | |
| Emission Controls | None | | | | |
| Fuel Heating Value | 1020 | Btu/scf | Gas Analysis | | |
| Heat Rate | 1.250 | MMBtu/hr | | | |
| Sulfur Content | 0.0 | grains S/MMscf | Gas Analysis | | |

***Potential Emissions***

| Pollutant | Emission Factor (lb/MMscf) | Nominal Rating (MMBtu/hr) | Hrs of Operation (hrs/yr) | Estimated Emissions (lb/hr) | Estimated Emissions (tpy) | Source of Emission Factor |
|---|---|---|---|---|---|---|
| NOx | 100 | 1.250 | 8760 | 0.12255 | 0.53676 | AP-42 Table 1.4-1 |
| CO | 84 | 1.250 | 8760 | 0.10294 | 0.45088 | AP-42 Table 1.4-1 |
| VOC | 5.5 | 1.250 | 8760 | 0.00674 | 0.02952 | AP-42 Table 1.4-2 |
| SOx | 0.6 | 1.250 | 8760 | 0.00000 | 0.00000 | AP-42 Table 1.4-2 |
| PM10 | 7.6 | 1.250 | 8760 | 0.00931 | 0.04079 | AP-42 Table 1.4-2 |
| Benzene | 0.0021 | 1.250 | 8760 | 0.00000 | 0.00001 | AP-42 Table 1.4-3 |
| n-Hexane | 1.80 | 1.250 | 8760 | 0.00221 | 0.00966 | AP-42 Table 1.4-3 |
| Toluene | 0.0034 | 1.250 | 8760 | 0.00000 | 0.00002 | AP-42 Table 1.4-3 |
| $CH_2O$ | 0.075 | 1.250 | 8760 | 0.00009 | 0.00040 | AP-42 Table 1.4-3 |
| Total HAPs | | | | 0.00230 | 0.01009 | |

**Sample Calculation for NOx**

100 lb/MMscf / 1020.00 Btu/scf * 1.250 MMBtu/hr = 0.12255 lb/hr

**Heater / Boiler Detail Sheet**

| | | | | |
|---|---|---|---|---|
| Equipment Source Name | HT-5 | | | |
| Source Description | Fuel Gas Separator Heater | | | |
| Equipment Usage | Fuel Gas Separator Heater | | Potential operation | 8760 hr/yr |
| Equipment Make | Shurefire | | | |
| Equipment Model | TBD | | Potential fuel usage | 6.01 MMscf/yr |
| Serial Number | TBD | | | |
| Number of Heaters | 1 of 1 | | | |
| Emission Controls | None | | | |
| Fuel Heating Value | 1020 | Btu/scf | Gas Analysis | |
| Heat Rate | 0.700 | MMBtu/hr | | |
| Sulfur Content | 0.0 | grains S/MMscf | Gas Analysis | |

***Potential Emissions***

| Pollutant | Emission Factor (lb/MMscf) | Nominal Rating (MMBtu/hr) | Hrs of Operation (hrs/yr) | Estimated Emissions (lb/hr) | Estimated Emissions (tpy) | Source of Emission Factor |
|---|---|---|---|---|---|---|
| NOx | 100 | 0.700 | 8760 | 0.06863 | 0.30059 | AP-42 Table 1.4-1 |
| CO | 84 | 0.700 | 8760 | 0.05765 | 0.25249 | AP-42 Table 1.4-1 |
| VOC | 5.5 | 0.700 | 8760 | 0.00377 | 0.01653 | AP-42 Table 1.4-2 |
| SOx | 0.6 | 0.700 | 8760 | 0.00000 | 0.00000 | AP-42 Table 1.4-2 |
| PM10 | 7.6 | 0.700 | 8760 | 0.00522 | 0.02284 | AP-42 Table 1.4-2 |
| Benzene | 0.0021 | 0.700 | 8760 | 0.00000 | 0.00001 | AP-42 Table 1.4-3 |
| n-Hexane | 1.80 | 0.700 | 8760 | 0.00124 | 0.00541 | AP-42 Table 1.4-3 |
| Toluene | 0.0034 | 0.700 | 8760 | 0.00000 | 0.00001 | AP-42 Table 1.4-3 |
| $CH_2O$ | 0.075 | 0.700 | 8760 | 0.00005 | 0.00023 | AP-42 Table 1.4-3 |
| Total HAPs | | | | 0.00129 | 0.00565 | |

**Sample Calculation for NOx**

100 lb/MMscf / 1020.00 Btu/scf * 0.700 MMBtu/hr = 0.06863 lb/hr

## Engine Emission Detail Sheet

| Item | Value |
|---|---|
| Source Name: | GEN-1 |
| Description: | Generator |
| QTY: | 1 of 9 |
| Make: | Capstone |
| Model: | Capstone C-65 NG Std |
| Serial Number: | TBD |
| Manufacture Date: | TBD |
| Fuel Type: | Natural Gas |
| Engine Type: | Turbine |

| Item | Value | Units | Source |
|---|---|---|---|
| Rated Horsepower: | 87 | hp | Manufacturer |
| Heat Rate: | 0.842 | MMBtu/hr | Manufacturer |
| Fuel Heat Value: | 1162.2 | Btu/scf | Gas Analysis |
| Emisson Controls: | None | | |
| Control Efficiency: | 0% | | |
| Potential Operation: | 8760 | hr/yr | |
| Elevation: | 6805 | ft | |
| Sulfur Content | 0.0 | grains S/MMscf | Gas Analysis |

***Potential Emissions***

| Pollutant | Uncontrolled Emission Factor | Units | Nominal Rating | Hours of Operation | Uncontrolled Emissions | | Controlled Emissions | | | Source of Controlled Emission Factor |
|---|---|---|---|---|---|---|---|---|---|---|
| | EF | Units | (hp) | (hrs/yr) | (lb/hr) | (tpy) | EF (g/hp-hr) | (lb/hr) | (tpy) | |
| NOx | 0.16 | g/hp-hr | 87 | 8760 | 0.0307 | 0.134 | 0.16 | 0.0307 | 0.134 | Manufacturer Data |
| VOC | 0.034 | g/hp-hr | 87 | 8760 | 0.00652 | 0.0286 | 0.034 | 0.00652 | 0.0286 | Manufacturer Data |
| CO | 0.42 | g/hp-hr | 87 | 8760 | 0.0806 | 0.353 | 0.42 | 0.0806 | 0.353 | Manufacturer Data |
| SO2 | 0.000588 | lb/mmBtu | 87 | 8760 | 0.00 | 0.00 | 0.000588 | 0.00 | 0.00 | EPA AP-42 Table 3.2-2 |
| PM10* | 0.009987 | lb/mmBtu | 87 | 8760 | 0.00841 | 0.0368 | 0.0100 | 0.00841 | 0.0368 | EPA AP-42 Table 3.2-2 |

| HAPs | Uncontrolled Emission Factor | Units | Nominal Rating | Hours of Operation | Uncontrolled Emissions | | Controlled Emissions | | Source of Uncontrolled Emission Factor |
|---|---|---|---|---|---|---|---|---|---|
| | EF | Units | (MMBtu/hr) | (hrs/yr) | (lb/hr) | (tpy) | (lb/hr) | (tpy) | |
| Formaldehyde | 0.0528 | lb/mmBtu | 0.842 | 8760 | 0.0445 | 0.195 | 0.0445 | 0.195 | EPA AP-42 Table 3.2-2 |
| Acetaldehyde | 0.00836 | lb/mmBtu | 0.842 | 8760 | 0.00704 | 0.0308 | 0.00704 | 0.0308 | EPA AP-42 Table 3.2-2 |
| Acrolein | 0.00514 | lb/mmBtu | 0.842 | 8760 | 0.00433 | 0.0190 | 0.00433 | 0.0190 | EPA AP-42 Table 3.2-2 |
| Benzene | 0.00044 | lb/mmBtu | 0.842 | 8760 | 0.000370 | 0.00162 | 0.000370 | 0.00162 | EPA AP-42 Table 3.2-2 |
| Ethylbenzene | 0.0000397 | lb/mmBtu | 0.842 | 8760 | 0.0000334 | 0.000146 | 0.0000334 | 0.000146 | EPA AP-42 Table 3.2-2 |
| n-Hexane | 0.00111 | lb/mmBtu | 0.842 | 8760 | 0.000935 | 0.00409 | 0.000935 | 0.00409 | EPA AP-42 Table 3.2-2 |
| Toluene | 0.000408 | lb/mmBtu | 0.842 | 8760 | 0.000344 | 0.001505 | 0.000344 | 0.00150 | EPA AP-42 Table 3.2-2 |
| Xylene | 0.000184 | lb/mmBtu | 0.842 | 8760 | 0.000155 | 0.000679 | 0.000155 | 0.000679 | EPA AP-42 Table 3.2-2 |
| | | | | **TOTAL HAP's:** | 0.0577 | 0.253 | 0.0577 | 0.253 | |

**Sample Calculation**

0.16 g/hp-hr * 87 hp / 453.59 (g/lb) * 8760 hr/yr / 2000 lb/ton = 0.134 tpy

## Engine Emission Detail Sheet

| Item | Value |
|---|---|
| Source Name: | GEN-2 |
| Description: | Generator |
| QTY: | 2 of 9 |
| Make: | Capstone |
| Model: | Capstone C-65 NG Std |
| Serial Number: | TBD |
| Manufacture Date: | TBD |
| Fuel Type: | Natural Gas |
| Engine Type: | Turbine |

| Item | Value | Units | Source |
|---|---|---|---|
| Rated Horsepower: | 87 | hp | Manufacturer |
| Heat Rate: | 0.842 | MMBtu/hr | Manufacturer |
| Fuel Heat Value: | 1162.2 | Btu/scf | Gas Analysis |
| Emisson Controls: | None | | |
| Control Efficiency: | 0% | | |
| Potential Operation: | 8760 | hr/yr | |
| Elevation: | 6805 | ft | |
| Sulfur Content | 0.0 | grains S/MMscf | Gas Analysis |

***Potential Emissions***

| Pollutant | Uncontrolled Emission Factor | Units | Nominal Rating | Hours of Operation | Uncontrolled Emissions | | Controlled Emissions | | | Source of Controlled Emission Factor |
|---|---|---|---|---|---|---|---|---|---|---|
| | EF | Units | (hp) | (hrs/yr) | (lb/hr) | (tpy) | EF (g/hp-hr) | (lb/hr) | (tpy) | |
| NOx | 0.16 | g/hp-hr | 87 | 8760 | 0.0307 | 0.134 | 0.16 | 0.0307 | 0.134 | Manufacturer Data |
| VOC | 0.034 | g/hp-hr | 87 | 8760 | 0.00652 | 0.0286 | 0.034 | 0.00652 | 0.0286 | Manufacturer Data |
| CO | 0.42 | g/hp-hr | 87 | 8760 | 0.0806 | 0.353 | 0.42 | 0.0806 | 0.353 | Manufacturer Data |
| SO2 | 0.000588 | lb/mmBtu | 87 | 8760 | 0.00 | 0.00 | 0.000588 | 0.00 | 0.00 | EPA AP-42 Table 3.2-2 |
| PM10* | 0.009987 | lb/mmBtu | 87 | 8760 | 0.00841 | 0.0368 | 0.0100 | 0.00841 | 0.0368 | EPA AP-42 Table 3.2-2 |

| HAPs | Uncontrolled Emission Factor | Units | Nominal Rating | Hours of Operation | Uncontrolled Emissions | | Controlled Emissions | | Source of Uncontrolled Emission Factor |
|---|---|---|---|---|---|---|---|---|---|
| | EF | Units | (MMBtu/hr) | (hrs/yr) | (lb/hr) | (tpy) | (lb/hr) | (tpy) | |
| Formaldehyde | 0.0528 | lb/mmBtu | 0.842 | 8760 | 0.0445 | 0.195 | 0.0445 | 0.195 | EPA AP-42 Table 3.2-2 |
| Acetaldehyde | 0.00836 | lb/mmBtu | 0.842 | 8760 | 0.00704 | 0.0308 | 0.00704 | 0.0308 | EPA AP-42 Table 3.2-2 |
| Acrolein | 0.00514 | lb/mmBtu | 0.842 | 8760 | 0.00433 | 0.0190 | 0.00433 | 0.0190 | EPA AP-42 Table 3.2-2 |
| Benzene | 0.00044 | lb/mmBtu | 0.842 | 8760 | 0.000370 | 0.00162 | 0.000370 | 0.00162 | EPA AP-42 Table 3.2-2 |
| Ethylbenzene | 0.0000397 | lb/mmBtu | 0.842 | 8760 | 0.0000334 | 0.000146 | 0.0000334 | 0.000146 | EPA AP-42 Table 3.2-2 |
| n-Hexane | 0.00111 | lb/mmBtu | 0.842 | 8760 | 0.000935 | 0.00409 | 0.000935 | 0.00409 | EPA AP-42 Table 3.2-2 |
| Toluene | 0.000408 | lb/mmBtu | 0.842 | 8760 | 0.000344 | 0.001505 | 0.000344 | 0.00150 | EPA AP-42 Table 3.2-2 |
| Xylene | 0.000184 | lb/mmBtu | 0.842 | 8760 | 0.000155 | 0.000679 | 0.000155 | 0.000679 | EPA AP-42 Table 3.2-2 |
| | | | | **TOTAL HAP's:** | 0.0577 | 0.253 | 0.0577 | 0.253 | |

**Sample Calculation**

0.16 g/hp-hr * 87 hp / 453.59 (g/lb) * 8760 hr/yr / 2000 lb/ton = 0.134 tpy

## Engine Emission Detail Sheet

| Item | Value |
|---|---|
| Source Name: | GEN-3 |
| Description: | Generator |
| QTY: | 3 of 9 |
| Make: | Capstone |
| Model: | Capstone C-65 NG Std |
| Serial Number: | TBD |
| Manufacture Date: | TBD |
| Fuel Type: | Natural Gas |
| Engine Type: | Turbine |

| Item | Value | Units | Source |
|---|---|---|---|
| Rated Horsepower: | 87 | hp | Manufacturer |
| Heat Rate: | 0.842 | MMBtu/hr | Manufacturer |
| Fuel Heat Value: | 1162.2 | Btu/scf | Gas Analysis |
| Emisson Controls: | None | | |
| Control Efficiency: | 0% | | |
| Potential Operation: | 8760 | hr/yr | |
| Elevation: | 6805 | ft | |
| Sulfur Content | 0.0 | grains S/MMscf | Gas Analysis |

***Potential Emissions***

| Pollutant | Uncontrolled Emission Factor | Units | Nominal Rating | Hours of Operation | Uncontrolled Emissions | | Controlled Emissions | | | Source of Controlled Emission Factor |
|---|---|---|---|---|---|---|---|---|---|---|
| | EF | Units | (hp) | (hrs/yr) | (lb/hr) | (tpy) | EF (g/hp-hr) | (lb/hr) | (tpy) | |
| NOx | 0.16 | g/hp-hr | 87 | 8760 | 0.0307 | 0.134 | 0.16 | 0.0307 | 0.134 | Manufacturer Data |
| VOC | 0.034 | g/hp-hr | 87 | 8760 | 0.00652 | 0.0286 | 0.034 | 0.00652 | 0.0286 | Manufacturer Data |
| CO | 0.42 | g/hp-hr | 87 | 8760 | 0.0806 | 0.353 | 0.42 | 0.0806 | 0.353 | Manufacturer Data |
| SO2 | 0.000588 | lb/mmBtu | 87 | 8760 | 0.00 | 0.00 | 0.000588 | 0.00 | 0.00 | EPA AP-42 Table 3.2-2 |
| PM10* | 0.009987 | lb/mmBtu | 87 | 8760 | 0.00841 | 0.0368 | 0.0100 | 0.00841 | 0.0368 | EPA AP-42 Table 3.2-2 |

| HAPs | Uncontrolled Emission Factor | Units | Nominal Rating | Hours of Operation | Uncontrolled Emissions | | Controlled Emissions | | Source of Uncontrolled Emission Factor |
|---|---|---|---|---|---|---|---|---|---|
| | EF | Units | (MMBtu/hr) | (hrs/yr) | (lb/hr) | (tpy) | (lb/hr) | (tpy) | |
| Formaldehyde | 0.0528 | lb/mmBtu | 0.842 | 8760 | 0.0445 | 0.195 | 0.0445 | 0.195 | EPA AP-42 Table 3.2-2 |
| Acetaldehyde | 0.00836 | lb/mmBtu | 0.842 | 8760 | 0.00704 | 0.0308 | 0.00704 | 0.0308 | EPA AP-42 Table 3.2-2 |
| Acrolein | 0.00514 | lb/mmBtu | 0.842 | 8760 | 0.00433 | 0.0190 | 0.00433 | 0.0190 | EPA AP-42 Table 3.2-2 |
| Benzene | 0.00044 | lb/mmBtu | 0.842 | 8760 | 0.000370 | 0.00162 | 0.000370 | 0.00162 | EPA AP-42 Table 3.2-2 |
| Ethylbenzene | 0.0000397 | lb/mmBtu | 0.842 | 8760 | 0.0000334 | 0.000146 | 0.0000334 | 0.000146 | EPA AP-42 Table 3.2-2 |
| n-Hexane | 0.00111 | lb/mmBtu | 0.842 | 8760 | 0.000935 | 0.00409 | 0.000935 | 0.00409 | EPA AP-42 Table 3.2-2 |
| Toluene | 0.000408 | lb/mmBtu | 0.842 | 8760 | 0.000344 | 0.001505 | 0.000344 | 0.00150 | EPA AP-42 Table 3.2-2 |
| Xylene | 0.000184 | lb/mmBtu | 0.842 | 8760 | 0.000155 | 0.000679 | 0.000155 | 0.000679 | EPA AP-42 Table 3.2-2 |
| | | | | **TOTAL HAP's:** | 0.0577 | 0.253 | 0.0577 | 0.253 | |

**Sample Calculation**

0.16 g/hp-hr * 87 hp / 453.59 (g/lb) * 8760 hr/yr / 2000 lb/ton = 0.134 tpy

## Engine Emission Detail Sheet

| Item | Value |
|---|---|
| Source Name: | GEN-4 |
| Description: | Generator |
| QTY: | 4 of 9 |
| Make: | Capstone |
| Model: | Capstone C-65 NG Std |
| Serial Number: | TBD |
| Manufacture Date: | TBD |
| Fuel Type: | Natural Gas |
| Engine Type: | Turbine |

| Item | Value | Units | Source |
|---|---|---|---|
| Rated Horsepower: | 87 | hp | Manufacturer |
| Heat Rate: | 0.842 | MMBtu/hr | Manufacturer |
| Fuel Heat Value: | 1162.2 | Btu/scf | Gas Analysis |
| Emisson Controls: | None | | |
| Control Efficiency: | 0% | | |
| Potential Operation: | 8760 | hr/yr | |
| Elevation: | 6805 | ft | |
| Sulfur Content | 0.0 | grains S/MMscf | Gas Analysis |

***Potential Emissions***

| Pollutant | Uncontrolled Emission Factor | Units | Nominal Rating | Hours of Operation | Uncontrolled Emissions | | Controlled Emissions | | | Source of Controlled Emission Factor |
|---|---|---|---|---|---|---|---|---|---|---|
| | EF | Units | (hp) | (hrs/yr) | (lb/hr) | (tpy) | EF (g/hp-hr) | (lb/hr) | (tpy) | |
| NOx | 0.16 | g/hp-hr | 87 | 8760 | 0.0307 | 0.134 | 0.16 | 0.0307 | 0.134 | Manufacturer Data |
| VOC | 0.034 | g/hp-hr | 87 | 8760 | 0.00652 | 0.0286 | 0.034 | 0.00652 | 0.0286 | Manufacturer Data |
| CO | 0.42 | g/hp-hr | 87 | 8760 | 0.0806 | 0.353 | 0.42 | 0.0806 | 0.353 | Manufacturer Data |
| SO2 | 0.000588 | lb/mmBtu | 87 | 8760 | 0.00 | 0.00 | 0.000588 | 0.00 | 0.00 | EPA AP-42 Table 3.2-2 |
| PM10* | 0.009987 | lb/mmBtu | 87 | 8760 | 0.00841 | 0.0368 | 0.0100 | 0.00841 | 0.0368 | EPA AP-42 Table 3.2-2 |

| HAPs | Uncontrolled Emission Factor | Units | Nominal Rating | Hours of Operation | Uncontrolled Emissions | | Controlled Emissions | | Source of Uncontrolled Emission Factor |
|---|---|---|---|---|---|---|---|---|---|
| | EF | Units | (MMBtu/hr) | (hrs/yr) | (lb/hr) | (tpy) | (lb/hr) | (tpy) | |
| Formaldehyde | 0.0528 | lb/mmBtu | 0.842 | 8760 | 0.0445 | 0.195 | 0.0445 | 0.195 | EPA AP-42 Table 3.2-2 |
| Acetaldehyde | 0.00836 | lb/mmBtu | 0.842 | 8760 | 0.00704 | 0.0308 | 0.00704 | 0.0308 | EPA AP-42 Table 3.2-2 |
| Acrolein | 0.00514 | lb/mmBtu | 0.842 | 8760 | 0.00433 | 0.0190 | 0.00433 | 0.0190 | EPA AP-42 Table 3.2-2 |
| Benzene | 0.00044 | lb/mmBtu | 0.842 | 8760 | 0.000370 | 0.00162 | 0.000370 | 0.00162 | EPA AP-42 Table 3.2-2 |
| Ethylbenzene | 0.0000397 | lb/mmBtu | 0.842 | 8760 | 0.0000334 | 0.000146 | 0.0000334 | 0.000146 | EPA AP-42 Table 3.2-2 |
| n-Hexane | 0.00111 | lb/mmBtu | 0.842 | 8760 | 0.000935 | 0.00409 | 0.000935 | 0.00409 | EPA AP-42 Table 3.2-2 |
| Toluene | 0.000408 | lb/mmBtu | 0.842 | 8760 | 0.000344 | 0.001505 | 0.000344 | 0.00150 | EPA AP-42 Table 3.2-2 |
| Xylene | 0.000184 | lb/mmBtu | 0.842 | 8760 | 0.000155 | 0.000679 | 0.000155 | 0.000679 | EPA AP-42 Table 3.2-2 |
| | | | | **TOTAL HAP's:** | 0.0577 | 0.253 | 0.0577 | 0.253 | |

**Sample Calculation**

0.16 g/hp-hr * 87 hp / 453.59 (g/lb) * 8760 hr/yr / 2000 lb/ton = 0.134 tpy

## Engine Emission Detail Sheet

| Item | Value |
|---|---|
| Source Name: | GEN-5 |
| Description: | Generator |
| QTY: | 5 of 9 |
| Make: | Capstone |
| Model: | Capstone C-65 NG Std |
| Serial Number: | TBD |
| Manufacture Date: | TBD |
| Fuel Type: | Natural Gas |
| Engine Type: | Turbine |

| Item | Value | Units | Source |
|---|---|---|---|
| Rated Horsepower: | 87 | hp | Manufacturer |
| Heat Rate: | 0.842 | MMBtu/hr | Manufacturer |
| Fuel Heat Value: | 1162.2 | Btu/scf | Gas Analysis |
| Emisson Controls: | None | | |
| Control Efficiency: | 0% | | |
| Potential Operation: | 8760 | hr/yr | |
| Elevation: | 6805 | ft | |
| Sulfur Content | 0.0 | grains S/MMscf | Gas Analysis |

***Potential Emissions***

| Pollutant | Uncontrolled Emission Factor | Units | Nominal Rating | Hours of Operation | Uncontrolled Emissions | | Controlled Emissions | | | Source of Controlled Emission Factor |
|---|---|---|---|---|---|---|---|---|---|---|
| | EF | Units | (hp) | (hrs/yr) | (lb/hr) | (tpy) | EF (g/hp-hr) | (lb/hr) | (tpy) | |
| NOx | 0.16 | g/hp-hr | 87 | 8760 | 0.0307 | 0.134 | 0.16 | 0.0307 | 0.134 | Manufacturer Data |
| VOC | 0.034 | g/hp-hr | 87 | 8760 | 0.00652 | 0.0286 | 0.034 | 0.00652 | 0.0286 | Manufacturer Data |
| CO | 0.42 | g/hp-hr | 87 | 8760 | 0.0806 | 0.353 | 0.42 | 0.0806 | 0.353 | Manufacturer Data |
| SO2 | 0.000588 | lb/mmBtu | 87 | 8760 | 0.00 | 0.00 | 0.000588 | 0.00 | 0.00 | EPA AP-42 Table 3.2-2 |
| PM10* | 0.009987 | lb/mmBtu | 87 | 8760 | 0.00841 | 0.0368 | 0.0100 | 0.00841 | 0.0368 | EPA AP-42 Table 3.2-2 |

| HAPs | Uncontrolled Emission Factor | Units | Nominal Rating | Hours of Operation | Uncontrolled Emissions | | Controlled Emissions | | Source of Uncontrolled Emission Factor |
|---|---|---|---|---|---|---|---|---|---|
| | EF | Units | (MMBtu/hr) | (hrs/yr) | (lb/hr) | (tpy) | (lb/hr) | (tpy) | |
| Formaldehyde | 0.0528 | lb/mmBtu | 0.842 | 8760 | 0.0445 | 0.195 | 0.0445 | 0.195 | EPA AP-42 Table 3.2-2 |
| Acetaldehyde | 0.00836 | lb/mmBtu | 0.842 | 8760 | 0.00704 | 0.0308 | 0.00704 | 0.0308 | EPA AP-42 Table 3.2-2 |
| Acrolein | 0.00514 | lb/mmBtu | 0.842 | 8760 | 0.00433 | 0.0190 | 0.00433 | 0.0190 | EPA AP-42 Table 3.2-2 |
| Benzene | 0.00044 | lb/mmBtu | 0.842 | 8760 | 0.000370 | 0.00162 | 0.000370 | 0.00162 | EPA AP-42 Table 3.2-2 |
| Ethylbenzene | 0.0000397 | lb/mmBtu | 0.842 | 8760 | 0.0000334 | 0.000146 | 0.0000334 | 0.000146 | EPA AP-42 Table 3.2-2 |
| n-Hexane | 0.00111 | lb/mmBtu | 0.842 | 8760 | 0.000935 | 0.00409 | 0.000935 | 0.00409 | EPA AP-42 Table 3.2-2 |
| Toluene | 0.000408 | lb/mmBtu | 0.842 | 8760 | 0.000344 | 0.001505 | 0.000344 | 0.00150 | EPA AP-42 Table 3.2-2 |
| Xylene | 0.000184 | lb/mmBtu | 0.842 | 8760 | 0.000155 | 0.000679 | 0.000155 | 0.000679 | EPA AP-42 Table 3.2-2 |
| | | | | **TOTAL HAP's:** | 0.0577 | 0.253 | 0.0577 | 0.253 | |

**Sample Calculation**

0.16 g/hp-hr * 87 hp / 453.59 (g/lb) * 8760 hr/yr / 2000 lb/ton = 0.134 tpy

## Engine Emission Detail Sheet

| Item | Value |
|---|---|
| Source Name: | GEN-6 |
| Description: | Generator |
| QTY: | 6 of 9 |
| Make: | Capstone |
| Model: | Capstone C-65 NG Std |
| Serial Number: | TBD |
| Manufacture Date: | TBD |
| Fuel Type: | Natural Gas |
| Engine Type: | Turbine |

| Item | Value | Units | Source |
|---|---|---|---|
| Rated Horsepower: | 87 | hp | Manufacturer |
| Heat Rate: | 0.842 | MMBtu/hr | Manufacturer |
| Fuel Heat Value: | 1162.2 | Btu/scf | Gas Analysis |
| Emisson Controls: | None | | |
| Control Efficiency: | 0% | | |
| Potential Operation: | 8760 | hr/yr | |
| Elevation: | 6805 | ft | |
| Sulfur Content | 0.0 | grains S/MMscf | Gas Analysis |

***Potential Emissions***

| Pollutant | Uncontrolled Emission Factor | Units | Nominal Rating | Hours of Operation | Uncontrolled Emissions | | Controlled Emissions | | | Source of Controlled Emission Factor |
|---|---|---|---|---|---|---|---|---|---|---|
| | EF | Units | (hp) | (hrs/yr) | (lb/hr) | (tpy) | EF (g/hp-hr) | (lb/hr) | (tpy) | |
| NOx | 0.16 | g/hp-hr | 87 | 8760 | 0.0307 | 0.134 | 0.16 | 0.0307 | 0.134 | Manufacturer Data |
| VOC | 0.034 | g/hp-hr | 87 | 8760 | 0.00652 | 0.0286 | 0.034 | 0.00652 | 0.0286 | Manufacturer Data |
| CO | 0.42 | g/hp-hr | 87 | 8760 | 0.0806 | 0.353 | 0.42 | 0.0806 | 0.353 | Manufacturer Data |
| SO2 | 0.000588 | lb/mmBtu | 87 | 8760 | 0.00 | 0.00 | 0.000588 | 0.00 | 0.00 | EPA AP-42 Table 3.2-2 |
| PM10* | 0.009987 | lb/mmBtu | 87 | 8760 | 0.00841 | 0.0368 | 0.0100 | 0.00841 | 0.0368 | EPA AP-42 Table 3.2-2 |

| HAPs | Uncontrolled Emission Factor | Units | Nominal Rating | Hours of Operation | Uncontrolled Emissions | | Controlled Emissions | | Source of Uncontrolled Emission Factor |
|---|---|---|---|---|---|---|---|---|---|
| | EF | Units | (MMBtu/hr) | (hrs/yr) | (lb/hr) | (tpy) | (lb/hr) | (tpy) | |
| Formaldehyde | 0.0528 | lb/mmBtu | 0.842 | 8760 | 0.0445 | 0.195 | 0.0445 | 0.195 | EPA AP-42 Table 3.2-2 |
| Acetaldehyde | 0.00836 | lb/mmBtu | 0.842 | 8760 | 0.00704 | 0.0308 | 0.00704 | 0.0308 | EPA AP-42 Table 3.2-2 |
| Acrolein | 0.00514 | lb/mmBtu | 0.842 | 8760 | 0.00433 | 0.0190 | 0.00433 | 0.0190 | EPA AP-42 Table 3.2-2 |
| Benzene | 0.00044 | lb/mmBtu | 0.842 | 8760 | 0.000370 | 0.00162 | 0.000370 | 0.00162 | EPA AP-42 Table 3.2-2 |
| Ethylbenzene | 0.0000397 | lb/mmBtu | 0.842 | 8760 | 0.0000334 | 0.000146 | 0.0000334 | 0.000146 | EPA AP-42 Table 3.2-2 |
| n-Hexane | 0.00111 | lb/mmBtu | 0.842 | 8760 | 0.000935 | 0.00409 | 0.000935 | 0.00409 | EPA AP-42 Table 3.2-2 |
| Toluene | 0.000408 | lb/mmBtu | 0.842 | 8760 | 0.000344 | 0.001505 | 0.000344 | 0.00150 | EPA AP-42 Table 3.2-2 |
| Xylene | 0.000184 | lb/mmBtu | 0.842 | 8760 | 0.000155 | 0.000679 | 0.000155 | 0.000679 | EPA AP-42 Table 3.2-2 |
| | | | | **TOTAL HAP's:** | 0.0577 | 0.253 | 0.0577 | 0.253 | |

**Sample Calculation**

0.16 g/hp-hr * 87 hp / 453.59 (g/lb) * 8760 hr/yr / 2000 lb/ton = 0.134 tpy

## Engine Emission Detail Sheet

| Item | Value |
|---|---|
| Source Name: | GEN-7 |
| Description: | Generator |
| QTY: | 7 of 9 |
| Make: | Capstone |
| Model: | Capstone C-65 NG Std |
| Serial Number: | TBD |
| Manufacture Date: | TBD |
| Fuel Type: | Natural Gas |
| Engine Type: | Turbine |

| Item | Value | Units | Source |
|---|---|---|---|
| Rated Horsepower: | 87 | hp | Manufacturer |
| Heat Rate: | 0.842 | MMBtu/hr | Manufacturer |
| Fuel Heat Value: | 1162.2 | Btu/scf | Gas Analysis |
| Emisson Controls: | None | | |
| Control Efficiency: | 0% | | |
| Potential Operation: | 8760 | hr/yr | |
| Elevation: | 6805 | ft | |
| Sulfur Content | 0.0 | grains S/MMscf | Gas Analysis |

***Potential Emissions***

| Pollutant | Uncontrolled Emission Factor | Units | Nominal Rating | Hours of Operation | Uncontrolled Emissions | | Controlled Emissions | | | Source of Controlled Emission Factor |
|---|---|---|---|---|---|---|---|---|---|---|
| | EF | Units | (hp) | (hrs/yr) | (lb/hr) | (tpy) | EF (g/hp-hr) | (lb/hr) | (tpy) | |
| NOx | 0.16 | g/hp-hr | 87 | 8760 | 0.0307 | 0.134 | 0.16 | 0.0307 | 0.134 | Manufacturer Data |
| VOC | 0.034 | g/hp-hr | 87 | 8760 | 0.00652 | 0.0286 | 0.034 | 0.00652 | 0.0286 | Manufacturer Data |
| CO | 0.42 | g/hp-hr | 87 | 8760 | 0.0806 | 0.353 | 0.42 | 0.0806 | 0.353 | Manufacturer Data |
| SO2 | 0.000588 | lb/mmBtu | 87 | 8760 | 0.00 | 0.00 | 0.000588 | 0.00 | 0.00 | EPA AP-42 Table 3.2-2 |
| PM10* | 0.009987 | lb/mmBtu | 87 | 8760 | 0.00841 | 0.0368 | 0.0100 | 0.00841 | 0.0368 | EPA AP-42 Table 3.2-2 |

| HAPs | Uncontrolled Emission Factor | Units | Nominal Rating | Hours of Operation | Uncontrolled Emissions | | Controlled Emissions | | Source of Uncontrolled Emission Factor |
|---|---|---|---|---|---|---|---|---|---|
| | EF | Units | (MMBtu/hr) | (hrs/yr) | (lb/hr) | (tpy) | (lb/hr) | (tpy) | |
| Formaldehyde | 0.0528 | lb/mmBtu | 0.842 | 8760 | 0.0445 | 0.195 | 0.0445 | 0.195 | EPA AP-42 Table 3.2-2 |
| Acetaldehyde | 0.00836 | lb/mmBtu | 0.842 | 8760 | 0.00704 | 0.0308 | 0.00704 | 0.0308 | EPA AP-42 Table 3.2-2 |
| Acrolein | 0.00514 | lb/mmBtu | 0.842 | 8760 | 0.00433 | 0.0190 | 0.00433 | 0.0190 | EPA AP-42 Table 3.2-2 |
| Benzene | 0.00044 | lb/mmBtu | 0.842 | 8760 | 0.000370 | 0.00162 | 0.000370 | 0.00162 | EPA AP-42 Table 3.2-2 |
| Ethylbenzene | 0.0000397 | lb/mmBtu | 0.842 | 8760 | 0.0000334 | 0.000146 | 0.0000334 | 0.000146 | EPA AP-42 Table 3.2-2 |
| n-Hexane | 0.00111 | lb/mmBtu | 0.842 | 8760 | 0.000935 | 0.00409 | 0.000935 | 0.00409 | EPA AP-42 Table 3.2-2 |
| Toluene | 0.000408 | lb/mmBtu | 0.842 | 8760 | 0.000344 | 0.001505 | 0.000344 | 0.00150 | EPA AP-42 Table 3.2-2 |
| Xylene | 0.000184 | lb/mmBtu | 0.842 | 8760 | 0.000155 | 0.000679 | 0.000155 | 0.000679 | EPA AP-42 Table 3.2-2 |
| | | | | **TOTAL HAP's:** | 0.0577 | 0.253 | 0.0577 | 0.253 | |

**Sample Calculation**

0.16 g/hp-hr * 87 hp / 453.59 (g/lb) * 8760 hr/yr / 2000 lb/ton = 0.134 tpy

## Engine Emission Detail Sheet

| Item | Value |
|---|---|
| Source Name: | GEN-8 |
| Description: | Generator |
| QTY: | 8 of 9 |
| Make: | Capstone |
| Model: | Capstone C-65 NG Std |
| Serial Number: | TBD |
| Manufacture Date: | TBD |
| Fuel Type: | Natural Gas |
| Engine Type: | Turbine |

| Item | Value | Units | Source |
|---|---|---|---|
| Rated Horsepower: | 87 | hp | Manufacturer |
| Heat Rate: | 0.842 | MMBtu/hr | Manufacturer |
| Fuel Heat Value: | 1162.2 | Btu/scf | Gas Analysis |
| Emisson Controls: | None | | |
| Control Efficiency: | 0% | | |
| Potential Operation: | 8760 | hr/yr | |
| Elevation: | 6805 | ft | |
| Sulfur Content | 0.0 | grains S/MMscf | Gas Analysis |

***Potential Emissions***

| Pollutant | Uncontrolled Emission Factor | Units | Nominal Rating | Hours of Operation | Uncontrolled Emissions | | Controlled Emissions | | | Source of Controlled Emission Factor |
|---|---|---|---|---|---|---|---|---|---|---|
| | EF | Units | (hp) | (hrs/yr) | (lb/hr) | (tpy) | EF (g/hp-hr) | (lb/hr) | (tpy) | |
| NOx | 0.16 | g/hp-hr | 87 | 8760 | 0.0307 | 0.134 | 0.16 | 0.0307 | 0.134 | Manufacturer Data |
| VOC | 0.034 | g/hp-hr | 87 | 8760 | 0.00652 | 0.0286 | 0.034 | 0.00652 | 0.0286 | Manufacturer Data |
| CO | 0.42 | g/hp-hr | 87 | 8760 | 0.0806 | 0.353 | 0.42 | 0.0806 | 0.353 | Manufacturer Data |
| SO2 | 0.000588 | lb/mmBtu | 87 | 8760 | 0.00 | 0.00 | 0.000588 | 0.00 | 0.00 | EPA AP-42 Table 3.2-2 |
| PM10* | 0.009987 | lb/mmBtu | 87 | 8760 | 0.00841 | 0.0368 | 0.0100 | 0.00841 | 0.0368 | EPA AP-42 Table 3.2-2 |

| HAPs | Uncontrolled Emission Factor | Units | Nominal Rating | Hours of Operation | Uncontrolled Emissions | | Controlled Emissions | | Source of Uncontrolled Emission Factor |
|---|---|---|---|---|---|---|---|---|---|
| | EF | Units | (MMBtu/hr) | (hrs/yr) | (lb/hr) | (tpy) | (lb/hr) | (tpy) | |
| Formaldehyde | 0.0528 | lb/mmBtu | 0.842 | 8760 | 0.0445 | 0.195 | 0.0445 | 0.195 | EPA AP-42 Table 3.2-2 |
| Acetaldehyde | 0.00836 | lb/mmBtu | 0.842 | 8760 | 0.00704 | 0.0308 | 0.00704 | 0.0308 | EPA AP-42 Table 3.2-2 |
| Acrolein | 0.00514 | lb/mmBtu | 0.842 | 8760 | 0.00433 | 0.0190 | 0.00433 | 0.0190 | EPA AP-42 Table 3.2-2 |
| Benzene | 0.00044 | lb/mmBtu | 0.842 | 8760 | 0.000370 | 0.00162 | 0.000370 | 0.00162 | EPA AP-42 Table 3.2-2 |
| Ethylbenzene | 0.0000397 | lb/mmBtu | 0.842 | 8760 | 0.0000334 | 0.000146 | 0.0000334 | 0.000146 | EPA AP-42 Table 3.2-2 |
| n-Hexane | 0.00111 | lb/mmBtu | 0.842 | 8760 | 0.000935 | 0.00409 | 0.000935 | 0.00409 | EPA AP-42 Table 3.2-2 |
| Toluene | 0.000408 | lb/mmBtu | 0.842 | 8760 | 0.000344 | 0.001505 | 0.000344 | 0.00150 | EPA AP-42 Table 3.2-2 |
| Xylene | 0.000184 | lb/mmBtu | 0.842 | 8760 | 0.000155 | 0.000679 | 0.000155 | 0.000679 | EPA AP-42 Table 3.2-2 |
| | | | | **TOTAL HAP's:** | 0.0577 | 0.253 | 0.0577 | 0.253 | |

**Sample Calculation**

0.16 g/hp-hr * 87 hp / 453.59 (g/lb) * 8760 hr/yr / 2000 lb/ton = 0.134 tpy

## Engine Emission Detail Sheet

| Item | Value |
|---|---|
| Source Name: | GEN-9 |
| Description: | Generator |
| QTY: | 9 of 9 |
| Make: | Capstone |
| Model: | Capstone C-65 NG Std |
| Serial Number: | TBD |
| Manufacture Date: | TBD |
| Fuel Type: | Natural Gas |
| Engine Type: | Turbine |

| Item | Value | Units | Source |
|---|---|---|---|
| Rated Horsepower: | 87 | hp | Manufacturer |
| Heat Rate: | 0.842 | MMBtu/hr | Manufacturer |
| Fuel Heat Value: | 1162.2 | Btu/scf | Gas Analysis |
| Emisson Controls: | None | | |
| Control Efficiency: | 0% | | |
| Potential Operation: | 8760 | hr/yr | |
| Elevation: | 6805 | ft | |
| Sulfur Content | 0.0 | grains S/MMscf | Gas Analysis |

***Potential Emissions***

| Pollutant | Uncontrolled Emission Factor | Units | Nominal Rating | Hours of Operation | Uncontrolled Emissions | | Controlled Emissions | | | Source of Controlled Emission Factor |
|---|---|---|---|---|---|---|---|---|---|---|
| | EF | Units | (hp) | (hrs/yr) | (lb/hr) | (tpy) | EF (g/hp-hr) | (lb/hr) | (tpy) | |
| NOx | 0.16 | g/hp-hr | 87 | 8760 | 0.0307 | 0.134 | 0.16 | 0.0307 | 0.134 | Manufacturer Data |
| VOC | 0.034 | g/hp-hr | 87 | 8760 | 0.00652 | 0.0286 | 0.034 | 0.00652 | 0.0286 | Manufacturer Data |
| CO | 0.42 | g/hp-hr | 87 | 8760 | 0.0806 | 0.353 | 0.42 | 0.0806 | 0.353 | Manufacturer Data |
| SO2 | 0.000588 | lb/mmBtu | 87 | 8760 | 0.00 | 0.00 | 0.000588 | 0.00 | 0.00 | EPA AP-42 Table 3.2-2 |
| PM10* | 0.009987 | lb/mmBtu | 87 | 8760 | 0.00841 | 0.0368 | 0.0100 | 0.00841 | 0.0368 | EPA AP-42 Table 3.2-2 |

| HAPs | Uncontrolled Emission Factor | Units | Nominal Rating | Hours of Operation | Uncontrolled Emissions | | Controlled Emissions | | Source of Uncontrolled Emission Factor |
|---|---|---|---|---|---|---|---|---|---|
| | EF | Units | (MMBtu/hr) | (hrs/yr) | (lb/hr) | (tpy) | (lb/hr) | (tpy) | |
| Formaldehyde | 0.0528 | lb/mmBtu | 0.842 | 8760 | 0.0445 | 0.195 | 0.0445 | 0.195 | EPA AP-42 Table 3.2-2 |
| Acetaldehyde | 0.00836 | lb/mmBtu | 0.842 | 8760 | 0.00704 | 0.0308 | 0.00704 | 0.0308 | EPA AP-42 Table 3.2-2 |
| Acrolein | 0.00514 | lb/mmBtu | 0.842 | 8760 | 0.00433 | 0.0190 | 0.00433 | 0.0190 | EPA AP-42 Table 3.2-2 |
| Benzene | 0.00044 | lb/mmBtu | 0.842 | 8760 | 0.000370 | 0.00162 | 0.000370 | 0.00162 | EPA AP-42 Table 3.2-2 |
| Ethylbenzene | 0.0000397 | lb/mmBtu | 0.842 | 8760 | 0.0000334 | 0.000146 | 0.0000334 | 0.000146 | EPA AP-42 Table 3.2-2 |
| n-Hexane | 0.00111 | lb/mmBtu | 0.842 | 8760 | 0.000935 | 0.00409 | 0.000935 | 0.00409 | EPA AP-42 Table 3.2-2 |
| Toluene | 0.000408 | lb/mmBtu | 0.842 | 8760 | 0.000344 | 0.001505 | 0.000344 | 0.00150 | EPA AP-42 Table 3.2-2 |
| Xylene | 0.000184 | lb/mmBtu | 0.842 | 8760 | 0.000155 | 0.000679 | 0.000155 | 0.000679 | EPA AP-42 Table 3.2-2 |
| | | | | **TOTAL HAP's:** | 0.0577 | 0.253 | 0.0577 | 0.253 | |

**Sample Calculation**

0.16 g/hp-hr * 87 hp / 453.59 (g/lb) * 8760 hr/yr / 2000 lb/ton = 0.134 tpy

## Engine Emission Detail Sheet

| Item | Value |
|---|---|
| Source Name: | GEN-10 |
| Description: | Generator |
| QTY: | 1 of 3 |
| Make: | Capstone |
| Model: | Capstone C-200 NG |
| Serial Number: | TBD |
| Manufacture Date: | TBD |
| Fuel Type: | Natural Gas |
| Engine Type: | Turbine |

| Item | Value | Units | Source |
|---|---|---|---|
| Rated Horsepower: | 269 | hp | Manufacturer |
| Heat Rate: | 2.28 | MMBtu/hr | Manufacturer |
| Fuel Heat Value: | 1162.2 | Btu/scf | Gas Analysis |
| Emisson Controls: | None | | |
| Control Efficiency: | 0% | | |
| Potential Operation: | 8760 | hr/yr | |
| Elevation: | 6805 | ft | |
| Sulfur Content | 0.0 | grains S/MMscf | Gas Analysis |

***Potential Emissions***

| Pollutant | Uncontrolled Emission Factor | Units | Nominal Rating | Hours of Operation | Uncontrolled Emissions | | Controlled Emissions | | | Source of Controlled Emission Factor |
|---|---|---|---|---|---|---|---|---|---|---|
| | EF | Units | (hp) | (hrs/yr) | (lb/hr) | (tpy) | EF (g/hp-hr) | (lb/hr) | (tpy) | |
| NOx | 0.14 | g/hp-hr | 269 | 8760 | 0.0830 | 0.364 | 0.14 | 0.0830 | 0.364 | Manufacturer Data |
| VOC | 0.034 | g/hp-hr | 269 | 8760 | 0.0202 | 0.0883 | 0.034 | 0.0202 | 0.0883 | Manufacturer Data |
| CO | 0.37 | g/hp-hr | 269 | 8760 | 0.219 | 0.961 | 0.37 | 0.219 | 0.961 | Manufacturer Data |
| SO2 | 0.000588 | lb/mmBtu | 269 | 8760 | 0.00 | 0.00 | 0.000588 | 0.00 | 0.00 | EPA AP-42 Table 3.2-2 |
| PM10* | 0.009987 | lb/mmBtu | 269 | 8760 | 0.0228 | 0.0997 | 0.0100 | 0.0228 | 0.0997 | EPA AP-42 Table 3.2-2 |

| HAPs | Uncontrolled | Units | Nominal | Hours of Operation | Uncontrolled Emissions | | Controlled Emissions | | Source of Uncontrolled Emission |
|---|---|---|---|---|---|---|---|---|---|
| | EF | Units | (MMBtu/hr) | (hrs/yr) | (lb/hr) | (tpy) | (lb/hr) | (tpy) | |
| Formaldehyde | 0.0528 | lb/mmBtu | 2.280 | 8760 | 0.120 | 0.527 | 0.120 | 0.527 | EPA AP-42 Table 3.2-2 |
| Acetaldehyde | 0.00836 | lb/mmBtu | 2.280 | 8760 | 0.0191 | 0.0835 | 0.0191 | 0.0835 | EPA AP-42 Table 3.2-2 |
| Acrolein | 0.00514 | lb/mmBtu | 2.280 | 8760 | 0.0117 | 0.0513 | 0.0117 | 0.0513 | EPA AP-42 Table 3.2-2 |
| Benzene | 0.00044 | lb/mmBtu | 2.280 | 8760 | 0.00100 | 0.00439 | 0.00100 | 0.00439 | EPA AP-42 Table 3.2-2 |
| Ethylbenzene | 0.0000397 | lb/mmBtu | 2.280 | 8760 | 0.0000905 | 0.000396 | 0.0000905 | 0.000396 | EPA AP-42 Table 3.2-2 |
| n-Hexane | 0.00111 | lb/mmBtu | 2.280 | 8760 | 0.00253 | 0.0111 | 0.00253 | 0.0111 | EPA AP-42 Table 3.2-2 |
| Toluene | 0.000408 | lb/mmBtu | 2.280 | 8760 | 0.000930 | 0.00407 | 0.000930 | 0.00407 | EPA AP-42 Table 3.2-2 |
| Xylene | 0.000184 | lb/mmBtu | 2.280 | 8760 | 0.000420 | 0.00184 | 0.000420 | 0.00184 | EPA AP-42 Table 3.2-2 |
| | | | | **TOTAL HAP's:** | 0.156 | 0.684 | 0.156 | 0.684 | |

**Sample Calculation**

0.14 g/hp-hr * 269 hp / 453.59 (g/lb) * 8760 hr/yr / 2000 lb/ton = 0.364 tpy

## Engine Emission Detail Sheet

| Item | Value |
|---|---|
| Source Name: | GEN-11 |
| Description: | Generator |
| QTY: | 2 of 3 |
| Make: | Capstone |
| Model: | Capstone C-200 NG |
| Serial Number: | TBD |
| Manufacture Date: | TBD |
| Fuel Type: | Natural Gas |
| Engine Type: | Turbine |

| Item | Value | Units | Source |
|---|---|---|---|
| Rated Horsepower: | 269 | hp | Manufacturer |
| Heat Rate: | 2.28 | MMBtu/hr | Manufacturer |
| Fuel Heat Value: | 1162.2 | Btu/scf | Gas Analysis |
| Emisson Controls: | None | | |
| Control Efficiency: | 0% | | |
| Potential Operation: | 8760 | hr/yr | |
| Elevation: | 6805 | ft | |
| Sulfur Content | 0.0 | grains S/MMscf | Gas Analysis |

***Potential Emissions***

| Pollutant | Uncontrolled Emission Factor | Units | Nominal Rating | Hours of Operation | Uncontrolled Emissions | | Controlled Emissions | | | Source of Controlled Emission Factor |
|---|---|---|---|---|---|---|---|---|---|---|
| | EF | Units | (hp) | (hrs/yr) | (lb/hr) | (tpy) | EF (g/hp-hr) | (lb/hr) | (tpy) | |
| NOx | 0.14 | g/hp-hr | 269 | 8760 | 0.0830 | 0.364 | 0.14 | 0.0830 | 0.364 | Manufacturer Data |
| VOC | 0.034 | g/hp-hr | 269 | 8760 | 0.0202 | 0.0883 | 0.034 | 0.0202 | 0.0883 | Manufacturer Data |
| CO | 0.37 | g/hp-hr | 269 | 8760 | 0.219 | 0.961 | 0.37 | 0.219 | 0.961 | Manufacturer Data |
| SO2 | 0.000588 | lb/mmBtu | 269 | 8760 | 0.00 | 0.00 | 0.000588 | 0.00 | 0.00 | EPA AP-42 Table 3.2-2 |
| PM10* | 0.009987 | lb/mmBtu | 269 | 8760 | 0.0228 | 0.0997 | 0.0100 | 0.0228 | 0.0997 | EPA AP-42 Table 3.2-2 |

| HAPs | Uncontrolled | Units | Nominal | Hours of Operation | Uncontrolled Emissions | | Controlled Emissions | | Source of Uncontrolled Emission |
|---|---|---|---|---|---|---|---|---|---|
| | EF | Units | (MMBtu/hr) | (hrs/yr) | (lb/hr) | (tpy) | (lb/hr) | (tpy) | |
| Formaldehyde | 0.0528 | lb/mmBtu | 2.280 | 8760 | 0.120 | 0.527 | 0.120 | 0.527 | EPA AP-42 Table 3.2-2 |
| Acetaldehyde | 0.00836 | lb/mmBtu | 2.280 | 8760 | 0.0191 | 0.0835 | 0.0191 | 0.0835 | EPA AP-42 Table 3.2-2 |
| Acrolein | 0.00514 | lb/mmBtu | 2.280 | 8760 | 0.0117 | 0.0513 | 0.0117 | 0.0513 | EPA AP-42 Table 3.2-2 |
| Benzene | 0.00044 | lb/mmBtu | 2.280 | 8760 | 0.00100 | 0.00439 | 0.00100 | 0.00439 | EPA AP-42 Table 3.2-2 |
| Ethylbenzene | 0.0000397 | lb/mmBtu | 2.280 | 8760 | 0.0000905 | 0.000396 | 0.0000905 | 0.000396 | EPA AP-42 Table 3.2-2 |
| n-Hexane | 0.00111 | lb/mmBtu | 2.280 | 8760 | 0.00253 | 0.0111 | 0.00253 | 0.0111 | EPA AP-42 Table 3.2-2 |
| Toluene | 0.000408 | lb/mmBtu | 2.280 | 8760 | 0.000930 | 0.00407 | 0.000930 | 0.00407 | EPA AP-42 Table 3.2-2 |
| Xylene | 0.000184 | lb/mmBtu | 2.280 | 8760 | 0.000420 | 0.00184 | 0.000420 | 0.00184 | EPA AP-42 Table 3.2-2 |
| | | | | **TOTAL HAP's:** | 0.156 | 0.684 | 0.156 | 0.684 | |

**Sample Calculation**

0.14 g/hp-hr * 269 hp / 453.59 (g/lb) * 8760 hr/yr / 2000 lb/ton = 0.364 tpy

## Engine Emission Detail Sheet

| Item | Value |
|---|---|
| Source Name: | GEN-12 |
| Description: | Generator |
| QTY: | 3 of 3 |
| Make: | Capstone |
| Model: | Capstone C-200 NG |
| Serial Number: | TBD |
| Manufacture Date: | TBD |
| Fuel Type: | Natural Gas |
| Engine Type: | Turbine |

| Item | Value | Units | Source |
|---|---|---|---|
| Rated Horsepower: | 269 | hp | Manufacturer |
| Heat Rate: | 2.28 | MMBtu/hr | Manufacturer |
| Fuel Heat Value: | 1162.2 | Btu/scf | Gas Analysis |
| Emisson Controls: | None | | |
| Control Efficiency: | 0% | | |
| Potential Operation: | 8760 | hr/yr | |
| Elevation: | 6805 | ft | |
| Sulfur Content | 0.0 | grains S/MMscf | Gas Analysis |

***Potential Emissions***

| Pollutant | Uncontrolled Emission Factor | Units | Nominal Rating | Hours of Operation | Uncontrolled Emissions | | Controlled Emissions | | | Source of Controlled Emission Factor |
|---|---|---|---|---|---|---|---|---|---|---|
| | EF | Units | (hp) | (hrs/yr) | (lb/hr) | (tpy) | EF (g/hp-hr) | (lb/hr) | (tpy) | |
| NOx | 0.14 | g/hp-hr | 269 | 8760 | 0.0830 | 0.364 | 0.14 | 0.0830 | 0.364 | Manufacturer Data |
| VOC | 0.034 | g/hp-hr | 269 | 8760 | 0.0202 | 0.0883 | 0.034 | 0.0202 | 0.0883 | Manufacturer Data |
| CO | 0.37 | g/hp-hr | 269 | 8760 | 0.219 | 0.961 | 0.37 | 0.219 | 0.961 | Manufacturer Data |
| SO2 | 0.000588 | lb/mmBtu | 269 | 8760 | 0.00 | 0.00 | 0.000588 | 0.00 | 0.00 | EPA AP-42 Table 3.2-2 |
| PM10* | 0.009987 | lb/mmBtu | 269 | 8760 | 0.0228 | 0.0997 | 0.0100 | 0.0228 | 0.0997 | EPA AP-42 Table 3.2-2 |

| HAPs | Uncontrolled | Units | Nominal | Hours of Operation | Uncontrolled Emissions | | Controlled Emissions | | Source of Uncontrolled Emission |
|---|---|---|---|---|---|---|---|---|---|
| | EF | Units | (MMBtu/hr) | (hrs/yr) | (lb/hr) | (tpy) | (lb/hr) | (tpy) | |
| Formaldehyde | 0.0528 | lb/mmBtu | 2.280 | 8760 | 0.120 | 0.527 | 0.120 | 0.527 | EPA AP-42 Table 3.2-2 |
| Acetaldehyde | 0.00836 | lb/mmBtu | 2.280 | 8760 | 0.0191 | 0.0835 | 0.0191 | 0.0835 | EPA AP-42 Table 3.2-2 |
| Acrolein | 0.00514 | lb/mmBtu | 2.280 | 8760 | 0.0117 | 0.0513 | 0.0117 | 0.0513 | EPA AP-42 Table 3.2-2 |
| Benzene | 0.00044 | lb/mmBtu | 2.280 | 8760 | 0.00100 | 0.00439 | 0.00100 | 0.00439 | EPA AP-42 Table 3.2-2 |
| Ethylbenzene | 0.0000397 | lb/mmBtu | 2.280 | 8760 | 0.0000905 | 0.000396 | 0.0000905 | 0.000396 | EPA AP-42 Table 3.2-2 |
| n-Hexane | 0.00111 | lb/mmBtu | 2.280 | 8760 | 0.00253 | 0.0111 | 0.00253 | 0.0111 | EPA AP-42 Table 3.2-2 |
| Toluene | 0.000408 | lb/mmBtu | 2.280 | 8760 | 0.000930 | 0.00407 | 0.000930 | 0.00407 | EPA AP-42 Table 3.2-2 |
| Xylene | 0.000184 | lb/mmBtu | 2.280 | 8760 | 0.000420 | 0.00184 | 0.000420 | 0.00184 | EPA AP-42 Table 3.2-2 |
| | | | | **TOTAL HAP's:** | 0.156 | 0.684 | 0.156 | 0.684 | |

**Sample Calculation**

0.14 g/hp-hr * 269 hp / 453.59 (g/lb) * 8760 hr/yr / 2000 lb/ton = 0.364 tpy

**Loadout Emissions Detail Sheet**

| | | |
|---|---|---|
| Equipment Source Name | OILLOAD-1 | |
| Source Description | Oil Loadout | |
| QTY: | 1 of 1 | |
| Potential Throughput | 1387000 | bbl/yr |

***Potential Emissions***

| Pollutant | Estimated Emissions Potential lb/hr | tpy | Source of Emission Calculations |
|---|---|---|---|
| VOC | 17.8 | 41.1 | AP-42 Section 5.2.1 |

| | | | | |
|---|---|---|---|---|
| Molecular Weight of Vapors, MW | 35.0 | lb/lb-mol | Oil Lab Analysis | |
| True Vapor Pressure, Pva @ T | 2.8 | psia | AP-42 Table 7.1-2 | |
| Temperature of Bulk Liquid Loaded, T | 60 | F | AP-42 Table 7.1-2 | |
| | 520 | R | | |
| Saturation Factor | 0.6 | | AP-42 Table 5.2.1 | |
| Efficiency of controlled loading (%) | 0.0% | | | |
| Potential Annual Throughput, v | 58,254 | 1000 gallons | | |
| Loading losses, L @ tank | 1.41 | lb/1000 gallons | | |
| L = 12.46 S P MW / T (1-eff) | | | | |
| Potential annual losses @ tank, L*v | 82,120.04 | lb/yr | **41.1** | **tpy** |
| | | HAPs Total: | 1.09 | tpy |
| | | | 0.248 | lb/hr |
| Max hourly fill rate | 12.6 | 1000 gallons/hr | Trucking Company | |
| Max hourly emissions | **17.8** | **lb/hr** | Calculated | |

**Sample Calculation**

1387000 bbl/yr * 42 gal/bbl / 1000 gal * 1.41 lb/1000 gal / 2000 lb/ton = 41.1 tpy

**Fugitive Emissions Detail Sheet**

Equipment Source Name: FUG-1
Source Description: Fugitives
Potential Operation: 8760 hr/yr
Emission Controls: None

| Equipment Type | Wellhead | Separator | Heater Treater | Header | In-Line Heater | Meters, Piping | Compressors[5] | Dehydrators | Oil Tanks |
|---|---|---|---|---|---|---|---|---|---|
| **Equipment Count** | **8** | **5** | **1** | **1** | **5** | **1** | **3** | **0** | **15** |

| **Light Crude - Count per unit[1]** | Wellhead | Separator | Heater Treater | Header | Oil Tanks |
|---|---|---|---|---|---|
| Valve | 5 | 6 | 8 | 5 | 4 |
| Flanges | 10 | 12 | 12 | 10 | 8 |
| Connectors | 4 | 10 | 20 | 4 | 8 |
| Open-Ended Lines | 0 | 0 | 0 | 0 | 0 |
| Other Components | 1 | 0 | 0 | 0 | 2 |

| **Gas - Count per unit[2]** | Wellhead | Separators | Meter/Piping | Compressors | In-Line Heaters | Dehydrators | Oil Tanks |
|---|---|---|---|---|---|---|---|
| Valve | 11 | 34 | 14 | 73 | 14 | 24 | 1 |
| Connectors | 36 | 106 | 51 | 179 | 65 | 90 | 14 |
| Open-Ended Lines | 1 | 6 | 1 | 3 | 2 | 2 | 1 |
| Pressure Relief Valves | 0 | 2 | 1 | 4 | 1 | 2 | 1 |

| **Light Crude - Fugitive Emissions** | | | | |
|---|---|---|---|---|
| Equipment Type | Light Crude Leak Rate[3] (kg/hr/source) | Source Count | VOC Emission Rate (tpy) | VOC Emission Rate (lb/hr) |
| Valve | 2.50E-03 | 143 | 3.45 | 0.788 |
| Flanges | 1.10E-04 | 282 | 0.300 | 0.0684 |
| Connectors | 2.10E-04 | 226 | 0.458 | 0.105 |
| Open Ended Lines | 1.40E-03 | 0 | 0.00 | 0.00 |
| Other Components | 7.50E-03 | 38 | 2.75 | 0.628 |
| **Totals** | | | **6.96** | **1.59** |
| | | HAP Total: | 0.184 | 0.0420 |
| | | CO2 Total: | 0.00 | 0.00 |
| | | CH4 Total: | 1.72 | 0.393 |

| **Gas - Fugitive Emissions** | | | | |
|---|---|---|---|---|
| Equipment Type | Gas Leak Rate[3] (kg/hr/source) | Source Count | VOC Emission Rate (tpy) | VOC Emission Rate (lb/hr) |
| Valve | 4.50E-03 | 576 | 8.29 | 1.89 |
| Connectors | 2.00E-04 | 1941 | 1.24 | 0.283 |
| Open Ended Lines | 2.00E-03 | 73 | 0.467 | 0.107 |
| Pressure Relief Valves[5] | 8.80E-03 | 43 | 1.21 | 0.276 |
| **Totals** | | | **11.2** | **2.56** |
| | | HAP Total: | 1.15 | 0.262 |
| | | H2S Total: | 0.00 | 0.00 |
| | | CO2 Total: | 0.277 | 0.0633 |
| | | CH4 Total: | 17.3 | 3.95 |

| **Light Crude and Gas Combined Total** | | lb/hr | tpy |
|---|---|---|---|
| | VOC | 4.15 | 18.2 |
| | H2S | 0.00 | 0.00 |
| | HAPs | 0.304 | 1.33 |

**NOTES:**
1 - Component counts taken from 40 CFR 98 Subpart W, Table W-1C, Western U.S. Oil tank component counts are estimated.
2 - Component counts taken from 40 CFR 98 Subpart W, Table W-1B, Western U.S. Oil tank component counts are estimated.
3 - Component leak rates taken from EPA's Oil and Gas Production Operations average equipment leak emission factors (EPA 453/R-95-017 dated November 1995) Table 2-4.
4 - In Tables 2-D and 2-E of the application form, these Light Crude Service equipment leaks emissions are combined with the Gas Service equipment leaks emissions.
5 - Equipment counts assume three compressors to allow for the worst case fugitives scenario that includes three compressors at the facility.

**Sample Calculation**
0.00250 kg/hr-source * 143 Sources * 2.20462 lb/kg * 100 % VOC Wt% * 8760 hr/yr /2000 lb/ton = 3.45 tpy

** Assuming light crude weight percentage is 100% VOC to be conservative in light-crude fugitive emission calculations.

**Compressor Blowdown Detail Sheet**

| | | | | |
|---|---|---|---|---|
| Equipment Source Name: | COMP-1 | | | |
| Equipment Name | Compressor | | | |
| QTY: | 1 of 1 | | | |
| Source Description | Reciprocating | | | |
| Equipment Usage | Reciprocating Compressor | Potential operation | | 8760 hr/yr |
| Equipment Make | TBD | | | |
| Equipment Model | TBD | | | |
| Serial Number | TBD | HAP weight fraction | 0.03 | |

***Potential Emissions***

| Pollutant | Emission Factor (Mscf/event) | Frequency (events/yr) | Estimated Emissions (ton/blowdown) | Estimated Emissions (lb/hr) | Estimated Emissions (tpy) | Source of Emission Factor |
|---|---|---|---|---|---|---|
| VOC | 1.38 | 120 | 0.0116 | 0.318 | 1.39 | Manufacturer Information |
| HAPs | | | | 0.0405 | 0.177 | Manufacturer Information |

**Sample Calculation**

1.380 Mscf/event X 1000 scf/Mscf / 379 scf/lb-mol X 6.37 lb/lb-mol** X 1/2000 lb/ton X 120 events/year = 1.39 tpy

** From Gas Analysis

**Compressor Blowdown Detail Sheet**

| | | | | |
|---|---|---|---|---|
| Equipment Source Name: | COMP-2 | | | |
| Equipment Name | Compressor | | | |
| QTY: | 1 of 1 | | | |
| Source Description | Reciprocating | | | |
| Equipment Usage | Reciprocating Compressor | Potential operation | | 8760 hr/yr |
| Equipment Make | TBD | | | |
| Equipment Model | TBD | | | |
| Serial Number | TBD | HAP weight fraction | 0.03 | |

***Potential Emissions***

| Pollutant | Emission Factor (Mscf/event) | Frequency (events/yr) | Estimated Emissions (ton/blowdown) | Estimated Emissions (lb/hr) | Estimated Emissions (tpy) | Source of Emission Factor |
|---|---|---|---|---|---|---|
| VOC | 0.139 | 24 | 0.00117 | 0.00640 | 0.0280 | Manufacturer Information |
| HAPs | | | | 0.000816 | 0.00357 | Manufacturer Information |

**Sample Calculation**

0.139 Mscf/event X 1000 scf/Mscf / 379 scf/lb-mol X 6.37 lb/lb-mol** X 1/2000 lb/ton X 24 events/year = 0.03 tpy

** From Gas Analysis

**Compressor Blowdown Detail Sheet**

| | | | | |
|---|---|---|---|---|
| Equipment Source Name: | COMP-3 | | | |
| Equipment Name | Compressor | | | |
| QTY: | 1 of 1 | | | |
| Source Description | Reciprocating | | | |
| Equipment Usage | Reciprocating Compressor | Potential operation | | 8760 hr/yr |
| Equipment Make | TBD | | | |
| Equipment Model | TBD | | | |
| Serial Number | TBD | HAP weight fraction | 0.03 | |

***Potential Emissions***

| Pollutant | Emission Factor (Mscf/event) | Frequency (events/yr) | Estimated Emissions (ton/blowdown) | Estimated Emissions (lb/hr) | Estimated Emissions (tpy) | Source of Emission Factor |
|---|---|---|---|---|---|---|
| VOC | 0.520 | 120 | 0.00437 | 0.120 | 0.525 | Manufacturer Information |
| HAPs | | | | 0.0153 | 0.0668 | Manufacturer Information |

**Sample Calculation**

0.520 Mscf/event X 1000 scf/Mscf / 379 scf/lb-mol X 6.37 lb/lb-mol** X 1/2000 lb/ton X 120 events/year = 0.52 tpy

** From Gas Analysis

**Compressor Blowdown Detail Sheet**

| | | | | |
|---|---|---|---|---|
| Equipment Source Name: | COMP-4 | | | |
| Equipment Name | Compressor | | | |
| QTY: | 1 of 1 | | | |
| Source Description | Reciprocating | | | |
| Equipment Usage | Reciprocating Compressor | Potential operation | | 8760 hr/yr |
| Equipment Make | TBD | | | |
| Equipment Model | TBD | | | |
| Serial Number | TBD | HAP weight fraction | 0.03 | |

***Potential Emissions***

| Pollutant | Emission Factor (Mscf/event) | Frequency (events/yr) | Estimated Emissions (ton/blowdown) | Estimated Emissions (lb/hr) | Estimated Emissions (tpy) | Source of Emission Factor |
|---|---|---|---|---|---|---|
| VOC | 0.139 | 24 | 0.00117 | 0.00640 | 0.0280 | Manufacturer Information |
| HAPs | | | | 0.000816 | 0.00357 | Manufacturer Information |

**Sample Calculation**

0.139 Mscf/event X 1000 scf/Mscf / 379 scf/lb-mol X 6.37 lb/lb-mol** X 1/2000 lb/ton X 24 events/year = 0.03 tpy

** From Gas Analysis

**Compressor Blowdown Detail Sheet**

| | | | | |
|---|---|---|---|---|
| Equipment Source Name: | COMP-5 | | | |
| Equipment Name | Compressor | | | |
| QTY: | 1 of 1 | | | |
| Source Description | Reciprocating | | | |
| Equipment Usage | Reciprocating Compressor | Potential operation | | 8760 hr/yr |
| Equipment Make | TBD | | | |
| Equipment Model | TBD | | | |
| Serial Number | TBD | HAP weight fraction | 0.03 | |

***Potential Emissions***

| Pollutant | Emission Factor (Mscf/event) | Frequency (events/yr) | Estimated Emissions (ton/blowdown) | Estimated Emissions (lb/hr) | Estimated Emissions (tpy) | Source of Emission Factor |
|---|---|---|---|---|---|---|
| VOC | 0.139 | 24 | 0.00117 | 0.00640 | 0.0280 | Manufacturer Information |
| HAPs | | | | 0.000816 | 0.00357 | Manufacturer Information |

**Sample Calculation**

0.139 Mscf/event X 1000 scf/Mscf / 379 scf/lb-mol X 6.37 lb/lb-mol** X 1/2000 lb/ton X 24 events/year = 0.03 tpy

** From Gas Analysis

**Flare Detail Sheet**

| | | | | | |
|---|---|---|---|---|---|
| Equipment Source Name | FL-1 | | Stack Height: | 20 | ft |
| Source Description | Emergency Flare | | Potential Operation: | 8760 | hr/yr |
| Equipment Make | TBD | | | | |
| Equipment Model | TBD | | Flare Pilot Rating: | 0.10 | MMBtu/hr |
| Serial Number | TBD | | Pilot Heat Value: | 1020 | Btu/scf |
| Quantity | 1 of 2 | | | | |
| Destruction Efficiency | 95% | | | | |
| Gas Heating Value[2] | 1162.18 | Btu/scf | | | |
| Gas Flow Rate[1] | 14,400 | scf/d | | | |
| Max Sulfur Content[3] | 0.0 | grains/MMscf | | | |

***Pilot Stream Emissions***

| Pollutant | Emission Factor (lb/MMBtu) | Estimated Emissions (lb/hr) | Estimated Emissions (tpy) | Source of Emission Factor |
|---|---|---|---|---|
| NOx | 0.068 | 0.00680 | 0.0298 | AP-42 Table 13.5-1 |
| CO | 0.310 | 0.0310 | 0.136 | AP-42 Table 13.5-2 |

***Waste Stream Emissions***

| Pollutant | Emission Factor (lb/MMBtu) | Flow Rate (scf/d) | Hrs of Operation (hrs/yr) | Estimated Emissions (lb/hr) | Estimated Emissions (tpy) | Source of Emission Factor |
|---|---|---|---|---|---|---|
| NOx | 0.068 | 14,400 | 8760 | 0.0474 | 0.208 | AP-42 Table 13.5-1 |
| CO | 0.31 | 14,400 | 8760 | 0.216 | 0.947 | AP-42 Table 13.5-2 |
| VOC | 0.66 | 14,400 | 8760 | 0.460 | 2.02 | AP-42 Table 13.5-2 |
| SO2 | N/A | 14,400 | 8760 | 0.00 | 0.00 | Engineering Calc. |
| PM10[4] | 40 | 14,400 | 8760 | 0.00150 | 0.00657 | AP-42 Table 13.5-1 |

***Total Emissions***

| Pollutant | Estimated Emissions (lb/hr) | Estimated Emissions (tpy) |
|---|---|---|
| NOx | 0.0542 | 0.237 |
| CO | 0.247 | 1.08 |
| VOC | 0.460 | 2.02 |
| SO2 | 0.00 | 0.00 |
| PM10[4] | 0.00150 | 0.00657 |

**Notes:**

1 - Gas flow rate based on the worst-case actual monthly average for a single well at a similar site. Although the well may produce up to 4.0 MMscfd, only 14,400 scfd will be flared during emergencies.

2 - Gas heating value is from gas analysis #WP130059.

3 - Assumes natural gas has the same sulfur content as the engine fuel gas. This value is based on AP42 Chapter 3.2.

4 - PM10 emission factor in units of µg/L, assuming a lightly smoking flare.

**Sample Calculation for NOx**

0.068 lb/MMBtu * MMscf / 1,000,000 scf * 14,400 scf/day *1,162.18 Btu/scf / 24 hr/day = 0.0474 lb/hr

**Flare Detail Sheet**

| | | | | | |
|---|---|---|---|---|---|
| Equipment Source Name | FL-2 | | Stack Height: | 20 | ft |
| Source Description | Emergency Flare | | Potential Operation: | 8760 | hr/yr |
| Equipment Make | TBD | | | | |
| Equipment Model | TBD | | Flare Pilot Rating: | 0.10 | MMBtu/hr |
| Serial Number | TBD | | Pilot Heat Value: | 1020 | Btu/scf |
| Quantity | 2 of 2 | | | | |
| Destruction Efficiency | 95% | | | | |
| Gas Heating Value[2] | 1162.18 | Btu/scf | | | |
| Gas Flow Rate[1] | 14,400 | scf/d | | | |
| Max Sulfur Content[3] | 0.0 | grains/MMscf | | | |

***Pilot Stream Emissions***

| Pollutant | Emission Factor (lb/MMBtu) | Estimated Emissions (lb/hr) | Estimated Emissions (tpy) | Source of Emission Factor |
|---|---|---|---|---|
| NOx | 0.068 | 0.00680 | 0.0298 | AP-42 Table 13.5-1 |
| CO | 0.310 | 0.0310 | 0.136 | AP-42 Table 13.5-2 |

***Waste Stream Emissions***

| Pollutant | Emission Factor (lb/MMBtu) | Flow Rate (scf/d) | Hrs of Operation (hrs/yr) | Estimated Emissions (lb/hr) | Estimated Emissions (tpy) | Source of Emission Factor |
|---|---|---|---|---|---|---|
| NOx | 0.068 | 14,400 | 8760 | 0.0474 | 0.208 | AP-42 Table 13.5-1 |
| CO | 0.31 | 14,400 | 8760 | 0.216 | 0.947 | AP-42 Table 13.5-2 |
| VOC | 0.66 | 14,400 | 8760 | 0.460 | 2.02 | AP-42 Table 13.5-2 |
| SO2 | N/A | 14,400 | 8760 | 0.00 | 0.00 | Engineering Calc. |
| PM10[4] | 40 | 14,400 | 8760 | 0.00150 | 0.00657 | AP-42 Table 13.5-1 |

***Total Emissions***

| Pollutant | Estimated Emissions (lb/hr) | Estimated Emissions (tpy) |
|---|---|---|
| NOx | 0.0542 | 0.237 |
| CO | 0.247 | 1.08 |
| VOC | 0.460 | 2.02 |
| SO2 | 0.00 | 0.00 |
| PM10[4] | 0.00150 | 0.00657 |

**Notes:**

1 - Gas flow rate based on the worst-case actual monthly average for a single well at a similar site. Although the well may produce up to 4.0 MMscfd, only 14,400 scfd will be flared during emergencies.

2 - Gas heating value is from gas analysis #WP130059.

3 - Assumes natural gas has the same sulfur content as the engine fuel gas. This value is based on AP42 Chapter 3.2.

4 - PM10 emission factor in units of µg/L, assuming a lightly smoking flare.

**Sample Calculation for NOx**

0.068 lb/MMBtu * MMscf / 1,000,000 scf * 14,400 scf/day *1,162.18 Btu/scf / 24 hr/day = 0.0474 lb/hr

**Fugitive Dust Emissions Detail Sheet**

Equipment Source Name: ROAD-1
Source Description: Road Dust
Potential Operation: 8760 hr/yr
Emission Controls: None

***Potential Emissions***

| Pollutant | Estimated Emissions Potential lb/hr | tpy | Source of Emission Calculations |
|---|---|---|---|
| PM30* | 5.95 | 7.52 | AP-42 Section 13.2.2 |
| PM10 | 1.52 | 1.92 | AP-42 Section 13.2.2 |
| PM 2.5 | 0.152 | 0.192 | AP-42 Section 13.2.2 |

* Assumed equivalent to total suspended particulate matter (TSP)

| | | | |
|---|---|---|---|
| Mean Vehicle Weight (W) | 18.8 | tons | Engineering Calculation |
| Surface Material Silt Content (s) | 4.8 | % | Per Kathleen Primm, 1/28/16 AQB email |
| Mean # of Days with > 0.01 inch of precipitation | 70 | Days | Per Kathleen Primm, 1/28/16 AQB email |
| Estimated Oil Production | 3800 | bbl/day | |
| Estimated Produced Water Production | 2000 | bbl/day | |

Tech Truck[1]

| | |
|---|---|
| 5000 | lb |
| 30 | visits/month |
| 7.49 | miles/month |

Oil Hauler[2]

| | |
|---|---|
| 40329 | lb |
| 46 | visits/300 BOPD |
| 582.7 | visits/month |
| 145.5 | miles/month |

Produced Water Hauler[3]

| | |
|---|---|
| 36402 | lb |
| 55 | visits/250 BWPD |
| 440.0 | visits/month |
| 109.9 | miles/month |

| | | | |
|---|---|---|---|
| Fugitive Dust (PM30) per mile traveled | 4.77 | lb/VMT | AP-42 Eqn 13.2.2-1a |
| Fugitive Dust (PM10) per mile traveled | 1.21 | lb/VMT | AP-42 Eqn 13.2.2-1a |
| Fugitive Dust (PM2.5) per mile traveled | 0.12 | lb/VMT | AP-42 Eqn 13.2.2-1a |
| Vehicle miles traveled | 0.25 | miles/trip | Engineering Assumption |
| Total Vehicle Miles | 3154.42 | miles/yr | |
| Max Hourly Vehicle Visits[5] | 5.00 | visits/hr | |
| Max Hourly Vehicle Miles | 1.25 | miles/hr | |

**Notes:**
1 - Based on the weight of a Ford F-150
2 - Based on the assumption each hauler can carry 200 bbls of oil per visit
3 - Based on the assumption each hauler can carry 140 bbls of produced water per visit
4 - NGL Hauler will haul contents offsite every other day
5 - Based on the assumption hauler trucks operate 8 hr/day

**Sample Calculation**
1.21 lb/VMT * 3154.42 miles/yr / 2000 lb/ton = 1.92 tpy

Gas Analysis

| Gas Constituent | Molecular Weight (lb/lb-mol) | Mole % | Weight (lb/lbmole Gas) | Weight % | Total HC Corrected Weight * % | Total VOC Corrected Weight ** % |
|---|---|---|---|---|---|---|
| Methane | 16.04 | 61.35% | 9.84 | 41.17% | 51.15% | NA |
| Ethane | 30.07 | 10.07% | 3.03 | 12.66% | 15.73% | NA |
| *Total HC (Non-VOC)* | | 71.42% | | 53.83% | 66.88% | NA |
| | | | | | | |
| Propane | 44.10 | 7.24% | 3.19 | 13.36% | 16.60% | 50.12% |
| Iso-Butane | 58.12 | 0.85% | 0.49 | 2.06% | 2.56% | 7.74% |
| N-Butane | 58.12 | 2.32% | 1.35 | 5.63% | 7.00% | 21.12% |
| Iso-Pentane | 72.15 | 0.49% | 0.35 | 1.47% | 1.83% | 5.51% |
| N-Pentane | 72.15 | 0.46% | 0.33 | 1.40% | 1.74% | 5.25% |
| Hexanes + | 84.18 | 0.78% | 0.65 | 2.73% | 3.39% | 10.25% |
| *Total NMNE VOC* | | 12.14% | 6.37 | 26.66% | **33.12%** | 100.00% |
| *Total HAPs* | | 0.78% | 0.65 | 2.73% | **3.39%** | **10.25%** |
| | | | | | | |
| Hydrogen Sulfide | 34.08 | 0.00% | 0.00 | 0.00% | NA | NA |
| Carbon Dioxide | 44.01 | 0.36% | 0.16 | 0.66% | NA | NA |
| Nitrogen | 28.01 | 16.09% | 4.51 | 18.85% | NA | NA |
| *Totals* | | 100.00% | 23.91 | 100.00% | 100.00% | |

*Average Molecular Weight of VOCs:* **52.52 lb/lb-mol**

Notes:

* Weight Percent corrected to remove Carbon Dioxide,Nitrogen, and H2S content.

** Weight Percent corrected to remove non-VOC content.

Oil Flash Gas Composition

| Liquid Constituent | Molecular Weight (lb/lb-mol) | Mole % | Weight (lb/lbmole Liquid) | Weight % | Total VOC Corrected Weight * % |
|---|---|---|---|---|---|
| Methane | 16.04 | 36.09% | 5.79 | 16.53% | NA |
| Ethane | 30.07 | 19.34% | 5.82 | 16.61% | NA |
| *Total HC (Non-VOC)* | | 55.43% | 11.60 | 33.14% | NA |
| | | | | | |
| Propane | 44.10 | 25.75% | 11.36 | 32.43% | 48.50% |
| Iso-Butane | 58.12 | 3.46% | 2.01 | 5.74% | 8.59% |
| N-Butane | 58.12 | 9.96% | 5.79 | 16.53% | 24.72% |
| Iso-Pentane | 72.15 | 2.11% | 1.53 | 4.36% | 6.51% |
| N-Pentane | 72.15 | 2.01% | 1.45 | 4.13% | 6.18% |
| i-Hexanes | 86.16 | 0.00% | 0.00 | 0.00% | 0.00% |
| Heptanes | 100.20 | 0.37% | 0.37 | 1.06% | 1.59% |
| Octanes | 114.23 | 0.12% | 0.13 | 0.38% | 0.57% |
| Nonanes | 128.28 | 0.02% | 0.03 | 0.08% | 0.12% |
| Decanes+ | 269.61 | 0.05% | 0.13 | 0.38% | 0.56% |
| Benzene | 78.11 | 0.04% | 0.03 | 0.10% | 0.15% |
| Toluene | 92.13 | 0.03% | 0.03 | 0.09% | 0.13% |
| Ethylbenzene | 106.17 | 0.00% | 0.00 | 0.01% | 0.01% |
| Xylenes | 106.17 | 0.01% | 0.01 | 0.03% | 0.05% |
| n-Hexane | 86.18 | 0.63% | 0.54 | 1.54% | 2.30% |
| 2-2-4 TMP | 114.24 | 0.00% | 0.00 | 0.00% | 0.00% |
| *Total NMNE VOC* | | 44.57% | 23.41 | 66.86% | 100.00% |
| *Total HAPs* | | 0.72% | 0.62 | 1.77% | 2.64% |
| | | | | | |
| Hydrogen Sulfide | 34.08 | 0.00% | 0.00 | 0.00% | NA |
| Carbon Dioxide | 44.01 | 0.00% | 0.00 | 0.00% | NA |
| Nitrogen | 28.01 | 0.00% | 0.00 | 0.00% | NA |
| *Totals* | | 100.00% | 35.02 | 100.00% | 100.00% |

* Weight Percent corrected to remove non-VOC content.

Produced Water Flash Gas

| Liquid Constituent | Molecular Weight (lb/lb-mol) | Mole % | Weight (lb/lbmole Liquid) | Weight % | Total VOC Corrected Weight * % |
|---|---|---|---|---|---|
| Methane | 16.04 | 62.32% | 10.00 | 43.04% | NA |
| Ethane | 30.07 | 10.93% | 3.29 | 14.15% | NA |
| *Total HC (Non-VOC)* | | 73.25% | 13.28 | 57.20% | NA |
| | | | | | |
| Propane | 44.10 | 5.05% | 2.23 | 9.59% | 61.82% |
| Iso-Butane | 58.12 | 0.37% | 0.21 | 0.91% | 5.89% |
| N-Butane | 58.12 | 1.04% | 0.61 | 2.61% | 16.80% |
| Iso-Pentane | 72.15 | 0.17% | 0.12 | 0.53% | 3.43% |
| N-Pentane | 72.15 | 0.14% | 0.10 | 0.43% | 2.78% |
| i-Hexanes | 86.16 | 0.07% | 0.06 | 0.25% | 1.60% |
| Heptanes | 100.20 | 0.05% | 0.05 | 0.21% | 1.36% |
| Octanes | 114.23 | 0.04% | 0.05 | 0.22% | 1.40% |
| Nonanes | 128.28 | 0.02% | 0.03 | 0.12% | 0.75% |
| Decanes+ | 142.29 | 0.05% | 0.06 | 0.28% | 1.78% |
| Benzene | 78.11 | 0.03% | 0.02 | 0.09% | 0.61% |
| Toluene | 92.13 | 0.04% | 0.03 | 0.15% | 0.95% |
| Ethylbenzene | 106.17 | 0.00% | 0.00 | 0.01% | 0.06% |
| Xylenes | 106.17 | 0.02% | 0.02 | 0.07% | 0.44% |
| n-Hexane | 86.18 | 0.01% | 0.01 | 0.05% | 0.34% |
| 2-2-4 TMP | 114.24 | 0.00% | 0.00 | 0.00% | 0.00% |
| *Total NMNE VOC* | | 7.09% | 3.60 | 15.51% | 100.00% |
| *Total HAPs* | | 0.10% | 0.09 | 0.37% | 2.39% |
| | | | | | |
| Hydrogen Sulfide | 34.08 | 0.00% | 0.00 | 0.00% | NA |
| Carbon Dioxide | 44.01 | 5.18% | 2.28 | 9.82% | NA |
| Nitrogen | 28.01 | 14.49% | 4.06 | 17.48% | NA |
| *Totals* | | 100.00% | 23.22 | 100.00% | 100.00% |

* Weight Percent corrected to remove non-VOC content.

Condensate Flash Gas Composition

| Liquid Constituent | Molecular Weight (lb/lb-mol) | Mole % | Weight (lb/lbmole Liquid) | Weight % | Total VOC Corrected Weight * % |
|---|---|---|---|---|---|
| Methane | 16.04 | 0.00% | 0.00 | 0.00% | NA |
| Ethane | 30.07 | 5.70% | 1.71 | 2.52% | NA |
| *Total HC (Non-VOC)* | | 5.70% | 1.71 | 2.52% | NA |
| | | | | | |
| Propane | 44.10 | 15.99% | 7.05 | 10.34% | 10.61% |
| Iso-Butane | 58.12 | 9.80% | 5.70 | 8.36% | 8.57% |
| N-Butane | 58.12 | 16.29% | 9.47 | 13.89% | 14.25% |
| Iso-Pentane | 72.15 | 14.60% | 10.53 | 15.45% | 15.85% |
| N-Pentane | 72.15 | 10.09% | 7.28 | 10.68% | 10.96% |
| i-Hexanes | 86.16 | | 0.00 | 0.00% | 0.00% |
| Heptanes | 100.20 | 8.23% | 8.25 | 12.10% | 12.41% |
| Octanes | 114.23 | 3.38% | 3.86 | 5.66% | 5.81% |
| Nonanes | 128.28 | 0.65% | 0.84 | 1.23% | 1.26% |
| Decanes+ | 142.29 | 0.30% | 0.43 | 0.63% | 0.65% |
| Benzene | 78.11 | 1.48% | 1.15 | 1.69% | 1.74% |
| Toluene | 92.13 | 2.18% | 2.01 | 2.94% | 3.02% |
| Ethylbenzene | 106.17 | 0.06% | 0.07 | 0.10% | 0.10% |
| Xylenes | 106.17 | 0.58% | 0.61 | 0.90% | 0.92% |
| n-Hexane | 86.18 | 10.68% | 9.20 | 13.50% | 13.85% |
| 2-2-4 TMP | 114.24 | 0.00% | 0.00 | 0.00% | 0.00% |
| *Total NMNE VOC* | | 94.30% | 66.44 | 97.48% | 100.00% |
| *Total HAPs* | | 14.97% | 13.04 | 19.13% | 19.63% |
| | | | | | |
| Hydrogen Sulfide | 34.08 | 0.00% | 0.00 | 0.00% | NA |
| Carbon Dioxide | 44.01 | 0.00% | 0.00 | 0.00% | NA |
| Nitrogen | 28.01 | 0.00% | 0.00 | 0.00% | NA |
| *Totals* | | 100.00% | 68.15 | 100.00% | 100.00% |

* Weight Percent corrected to remove non-VOC content.

## Reciprocating Compressors

Volumetric GHG Emissions from Reciprocating Compressors @ 68 F and 14.7 psi

| Pollutant | Number of Compressors | Number of Cylinders | Emission Factor scf/Comp./yr[(a)] | Total Volume scf/yr | Density kg/ft$^3$[(b)] | Global Warming Potential[(c)] | $CO_2e$ (ton/yr) |
|---|---|---|---|---|---|---|---|
| $CH_4$ | 1 | 4 | 9480 | 9480 | 0.0192 | 25 | 5.02 |
| CO2 | 1 | | 527 | 527 | 0.0526 | 1 | 0.03 |

*(a) 40 CFR Part 98 Subpart W, Equation W-29*

*(b) 40 CFR Part 98 Subpart W, Equation W-36*

*(c) 40 CFR Part 98 Subpart A, Table A-1*

| TOTAL | 5.05 |
|---|---|

# Section 6

## Information Used To Determine Emissions

---

**Information Used to Determine Emissions**

**Check the box for each type of information submitted**:

- ☒ If manufacturer data are used, include specifications for emissions units and control equipment, including control efficiencies specifications and sufficient engineering data for verification of control equipment operation, including design drawings, test reports, and design parameters that affect normal operation.
- ☐ If test data are used, include a copy of the complete test report. If the test data are for an emissions unit other than the one being permitted, the emission units must be identical. Test data may not be used if any difference in operating conditions of the unit being permitted and the unit represented in the test report significantly effect emission rates.
- ☒ If the most current copy of AP-42 is used, reference the section and date located at the bottom of the page. Include a copy of the page containing the emissions factors, and clearly mark the factors used in the calculations.
- ☐ If an older version of AP-42 is used, include a complete copy of the section.
- ☐ If an EPA document or other material is referenced, include a complete copy.
- ☐ Fuel specifications sheet.
- ☐ If computer models are used to estimate emissions, include an input summary and a detailed report, and a disk containing the input file used to run the model.
- ☒ For tank-flashing emissions, include a discussion of the method used to estimate tank-flashing emissions, accuracy of the model, the input and output summary from simulation models and software, all calculations, documentation of any assumptions used, descriptions of sampling methods and conditions, copies of any lab sample analysis. See example of input and output summary here: https://www.env.nm.gov/aqb/permit/Permit_Apps/AirQualityPermitNOIApplication.html

- ☒ If requesting to use a representative gas sample, include a discussion of why the sample is representative for this facility and an explanation of how it is representative (e.g., same reservoir, same similar API gravity, similar composition).

---

# Information included in this section:

1. Compressor engine information
2. Vapor Recovery Tank E&P Tanks v3.0 information
3. Oil Tank EPA TANKS 4.0.9d information
4. Produced Water Tank EPA TANKS 4.0.9d information
5. Vapor Recovery Unit (VRU) information
6. Separator Heater information
7. Generator information
8. AP-42 Tables/Figures/Equations:
    a. Table 1.4-1,1.4-2,1.4-3 – Heaters
    b. Table 3.2-2 – Lean Burn Engines
    c. Table 3.2-3 – Rich Burn Engines
    d. Table 5.2-1 – Loadout
    e. Table 7.1-2 – Loadout
    f. Table 13.5-1 & Table 13.5-2 – Flare
    g. Table 13.2.2-3, Figure 13.2.2-1, Equation 13.2.2-1a – Road Dust
9. 40 CFR 98 Subpart W, Tables W-1A and W-1C – Fugitives
10. Department Accepted Values For: Aggregate Handling, Storage Pile and Haul Road Emissions
11. Gas analytical data
12. Produced water analytical data
13. Oil analytical data



ED_004016Q_00001316-00100

# G3508B LE Gas Petroleum Engine

**515 bkW (690 bhp)**
**1400 rpm**

## 0.5 g/bhp-hr NOx or 1.0 g/bhp-hr NOx (NTE)

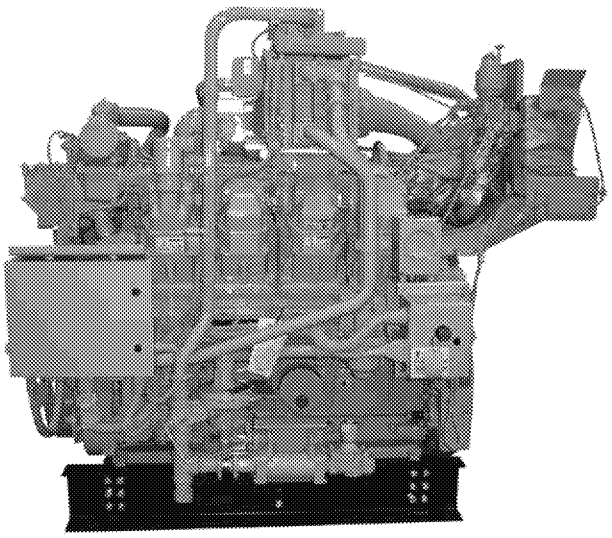

## CAT® ENGINE SPECIFICATIONS

**V-8, 4-Stroke-Cycle**

| | |
|---|---|
| Bore | 170 mm (6.7 in.) |
| Stroke | 190 mm (7.5 in.) |
| Displacement | 34.6 L (2115 cu. in.) |
| Aspiration | Turbocharged-2 Stage Aftercooled |
| Digital Engine Management Governor and Protection | Electronic (ADEM™ A3) |
| Combustion | Low Emissions (Lean Burn) |
| Engine Weight net dry (approx) | 3941 kg (8688 lb) |
| Power Density | 7.7 kg/kW (12.6 lb/hp) |
| Power per Displacement | 19.9 bhp/L |
| Total Cooling System Capacity | 130.5 L (34.4 gal) |
| Jacket Water | 119 L (31.4 gal) |
| Aftercooler Circuit | 11.5 L (3 gal) |
| Lube Oil System (refill) | 220 L (58 gal) |
| Oil Change Interval | 1000 hours |
| Rotation (from flywheel end) | Counterclockwise |
| Flywheel and Flywheel Housing | SAE No. 00 |
| Flywheel Teeth | 183 |

## FEATURES

**Engine Design**
- Built on G3500 LE proven reliability and durability
- Ability to burn a wide spectrum of gaseous fuels
- Robust diesel strength design prolongs life and lowers owning and operating costs
- Broad operating speed range at lower site air densities (high altitude/hot ambient temperatures)
- Higher power density improves fleet management
- Quality engine diagnostics
- Detonation-sensitive timing control for individual cylinders

**Ultra Lean Burn Technology (ULB)**
ULB technology uses an advanced control system, a better turbo match, improved air and fuel mixing, and a more sophisticated combustion recipe to provide:
- Lowest engine-out emissions
- Highest fuel efficiency
- Improved altitude and speed turndown
- Stable load acceptance and load rejection

**Emissions**
- Meets U.S. EPA Spark Ignited Stationary NSPS emissions for 2010 and some non-attainment areas
- Lean air/fuel mixture provides best available emissions and fuel efficiency for engines of this bore size

**Advanced Digital Engine Management**
ADEM A3 engine management system integrates speed control, air/fuel ratio control, and ignition/detonation controls into a complete engine management system. ADEM A3 has improved: user interface, display system, shutdown controls, and system diagnostics.

**Full Range of Attachments**
Large variety of factory-installed engine attachments reduces packaging time.

**Testing**
Every engine is full-load tested to ensure proper engine performance.

**Gas Engine Rating Pro**
GERP is a PC-based program designed to provide site performance capabilities for Cat® natural gas engines for the gas compression industry. GERP provides engine data for your site's altitude, ambient temperature, fuel, engine coolant heat rejection, performance data, installation drawings, spec sheets, and pump curves.

**Product Support Offered Through Global Cat Dealer Network**
More than 2,200 dealer outlets

Cat factory-trained dealer technicians service every aspect of your petroleum engine

Cat parts and labor warranty

Preventive maintenance agreements available for repair-before-failure options

S•O•S℠ program matches your oil and coolant samples against Caterpillar set standards to determine:
- Internal engine component condition
- Presence of unwanted fluids
- Presence of combustion by-products
- Site-specific oil change interval

**Over 80 Years of Engine Manufacturing Experience**
Over 60 years of natural gas engine production

Ownership of these manufacturing processes enables Caterpillar to produce high quality, dependable products
- Cast engine blocks, heads, cylinder liners, and flywheel housings
- Machine critical components
- Assemble complete engine

**Web Site**
For all your petroleum power requirements, visit www.catoilandgas.cat.com.

# G3508B

GAS COMPRESSION APPLICATION

## GAS ENGINE SITE SPECIFIC TECHNICAL DATA
## G3508ULB-Aaron Alvarez

CATERPILLAR®

| | | | |
|---|---|---|---|
| ENGINE SPEED (rpm): | 1400 | RATING STRATEGY: | STANDARD |
| COMPRESSION RATIO: | 8:1 | RATING LEVEL: | CONTINUOUS |
| AFTERCOOLER TYPE: | SCAC | FUEL SYSTEM: | CAT WIDE RANGE WITH AIR FUEL RATIO CONTROL |
| AFTERCOOLER - STAGE 2 INLET (°F): | 130 | | |
| AFTERCOOLER - STAGE 1 INLET (°F): | 201 | **SITE CONDITIONS:** | |
| JACKET WATER OUTLET (°F): | 203 | FUEL: | Nat Gas |
| ASPIRATION: | TA | FUEL PRESSURE RANGE(psig): | 7.0-40.0 |
| COOLING SYSTEM: | JW+OC+1AC, 2AC | FUEL METHANE NUMBER: | 84.8 |
| CONTROL SYSTEM: | ADEM3 | FUEL LHV (Btu/scf): | 905 |
| EXHAUST MANIFOLD: | DRY | ALTITUDE(ft): | 500 |
| COMBUSTION: | LOW EMISSION | MAXIMUM INLET AIR TEMPERATURE(°F): | 100 |
| NOx EMISSION LEVEL (g/bhp-hr NOx): | 0.5 | STANDARD RATED POWER: | 690 bhp@1400rpm |
| SET POINT TIMING: | 30 | | |

| | | | | MAXIMUM RATING | SITE RATING AT MAXIMUM INLET AIR TEMPERATURE | | |
|---|---|---|---|---|---|---|---|
| **RATING** | | **NOTES** | **LOAD** | **100%** | **100%** | **75%** | **50%** |
| ENGINE POWER | (WITHOUT FAN) | (1) | bhp | 690 | 690 | 517 | 345 |
| INLET AIR TEMPERATURE | | | °F | 100 | 100 | 100 | 100 |
| **ENGINE DATA** | | | | | | | |
| FUEL CONSUMPTION (LHV) | | (2) | Btu/bhp-hr | 7395 | 7395 | 7849 | 8535 |
| FUEL CONSUMPTION (HHV) | | (2) | Btu/bhp-hr | 8203 | 8203 | 8707 | 9468 |
| AIR FLOW (@inlet air temp, 14.7 psia) | (WET) | (3)(4) | ft3/min | 1665 | 1664 | 1291 | 898 |
| AIR FLOW | (WET) | (3)(4) | lb/hr | 7073 | 7073 | 5491 | 3817 |
| FUEL FLOW (60°F, 14.7 psia) | | | scfm | 94 | 94 | 75 | 54 |
| INLET MANIFOLD PRESSURE | | (5) | in Hg(abs) | 95.3 | 95.3 | 77.0 | 54.1 |
| EXHAUST TEMPERATURE - ENGINE OUTLET | | (6) | °F | 931 | 931 | 929 | 999 |
| EXHAUST GAS FLOW (@engine outlet temp, 14.5 psia) | (WET) | (7)(4) | ft3/min | 4455 | 4455 | 3458 | 2531 |
| EXHAUST GAS MASS FLOW | (WET) | (7)(4) | lb/hr | 7330 | 7330 | 5695 | 3965 |
| **EMISSIONS DATA - ENGINE OUT** | | | | | | | |
| NOx (as NO2) | | (8)(9) | g/bhp-hr | 0.50 | 0.50 | 0.50 | 0.50 |
| CO | | (8)(9) | g/bhp-hr | 2.58 | 2.58 | 2.75 | 2.71 |
| THC (mol. wt. of 15.84) | | (8)(9) | g/bhp-hr | 5.49 | 5.49 | 5.81 | 5.59 |
| NMHC (mol. wt. of 15.84) | | (8)(9) | g/bhp-hr | 0.82 | 0.82 | 0.87 | 0.84 |
| NMNEHC (VOCs) (mol. wt. of 15.84) | | (8)(9)(10) | g/bhp-hr | 0.55 | 0.55 | 0.58 | 0.56 |
| HCHO (Formaldehyde) | | (8)(9) | g/bhp-hr | 0.42 | 0.42 | 0.46 | 0.48 |
| CO2 | | (8)(9) | g/bhp-hr | 477 | 477 | 505 | 547 |
| EXHAUST OXYGEN | | (8)(11) | % DRY | 9.3 | 9.3 | 9.0 | 8.5 |
| **HEAT REJECTION** | | | | | | | |
| HEAT REJ. TO JACKET WATER (JW) | | (12) | Btu/min | 10787 | 10787 | 9234 | 8396 |
| HEAT REJ. TO ATMOSPHERE | | (12) | Btu/min | 3498 | 3498 | 2915 | 2332 |
| HEAT REJ. TO LUBE OIL (OC) | | (12) | Btu/min | 2650 | 2650 | 2405 | 2103 |
| HEAT REJ. TO A/C - STAGE 1 (1AC) | | (12)(13) | Btu/min | 5988 | 5988 | 5102 | 1965 |
| HEAT REJ. TO A/C - STAGE 2 (2AC) | | (12)(13) | Btu/min | 3222 | 3222 | 2991 | 1848 |
| **COOLING SYSTEM SIZING CRITERIA** | | | | | | | |
| TOTAL JACKET WATER CIRCUIT (JW+OC+1AC) | | (13)(14) | Btu/min | 21333 | | | |
| TOTAL AFTERCOOLER CIRCUIT (2AC) | | (13)(14) | Btu/min | 3383 | | | |
| A cooling system safety factor of 0% has been added to the cooling system sizing criteria. | | | | | | | |

**CONDITIONS AND DEFINITIONS**

Engine rating obtained and presented in accordance with ISO 3046/1, adjusted for fuel, site altitude and site inlet air temperature. 100% rating at maximum inlet air temperature is the maximum engine capability for the specified fuel at site altitude and maximum site inlet air temperature. Max. rating is the maximum capability for the specified fuel at site altitude and reduced inlet air temperature. Lowest load point is the lowest continuous duty operating load allowed. No overload permitted at rating shown.

For notes information consult page three.

PREPARED BY: Bradley Johnson, Compressor Systems Inc.
Data generated by Gas Engine Rating Pro Version 4.06.01
Ref. Data Set DM8826-03-001, Printed 20Feb2014

## Engine Power vs. Inlet Air Temperature

Data represents temperature sweep at 500 ft and 1400 rpm

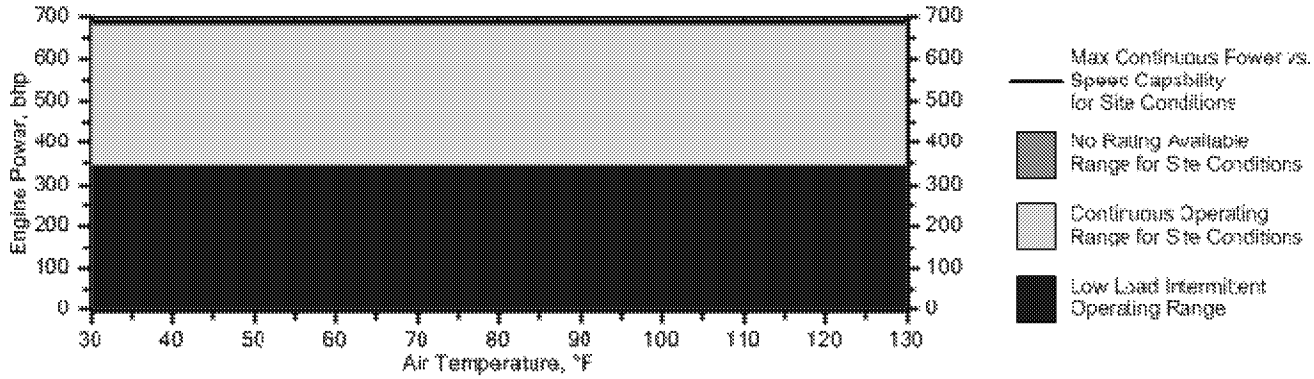


## Engine Power vs. Engine Speed

Data represents speed sweep at 500 ft and 100 °F

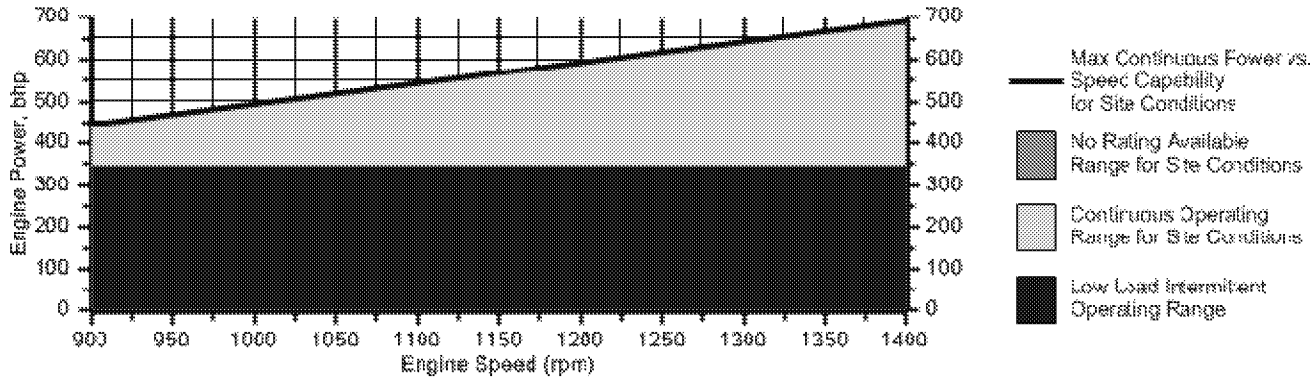


## Engine Torque vs. Engine Speed

Data represents speed sweep at 500 ft and 100 °F

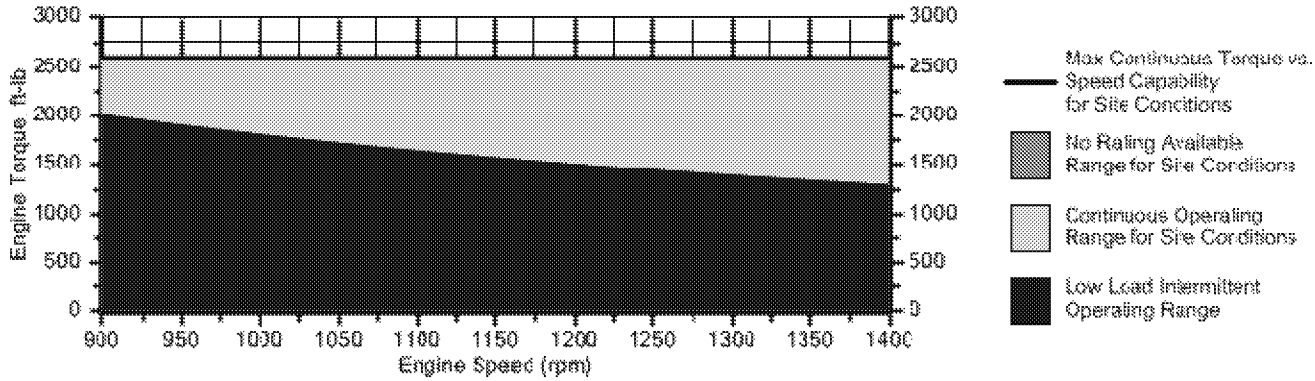


Note: At site conditions of 500 ft and 100°F inlet air temp., constant torque can be maintained down to 900 rpm. The minimum speed for loading at these conditions is 900 rpm.

## NOTES

1. Engine rating is with two engine driven water pumps. Tolerance is ± 3% of full load.

2. Fuel consumption tolerance is ± 3.0% of full load data.

3. Air flow value is on a 'wet' basis. Flow is a nominal value with a tolerance of ± 5 %.

4. Inlet and Exhaust Restrictions must not exceed A&I limits based on full load flow rates from the standard technical data sheet.

5. Inlet manifold pressure is a nominal value with a tolerance of ± 5 %.

6. Exhaust temperature is a nominal value with a tolerance of (+)63°F, (-)54°F.

7. Exhaust flow value is on a "wet" basis. Flow is a nominal value with a tolerance of ± 6 %.

8. Emissions data is at engine exhaust flange prior to any after treatment.

9. Emission values are based on engine operating at steady state conditions. Fuel methane number cannot vary more than ± 3. Values listed are higher than nominal levels to allow for instrumentation, measurement, and engine-to-engine variations. They indicate "Not to Exceed" values. THC, NMHC, and NMNEHC do not include aldehydes. An oxidation catalyst may be required to meet Federal, State or local CO or HC requirements.

10. VOCs - Volatile organic compounds as defined in US EPA 40 CFR 60, subpart JJJJ

11. Exhaust Oxygen level is the result of adjusting the engine to operate at the specified NOx level. Tolerance is ± 0.5.

12. Heat rejection values are nominal. Tolerances, based on treated water, are ± 10% for jacket water circuit, ± 50% for radiation, ± 20% for lube oil circuit, and ± 5% for aftercooler circuit.

13. Aftercooler heat rejection includes an aftercooler heat rejection factor for the site elevation and inlet air temperature specified. Aftercooler heat rejection values at part load are for reference only. Do not use part load data for heat exchanger sizing.

14. Cooling system sizing criteria are maximum circuit heat rejection for the site, with applied tolerances.

| Constituent | Abbrev | Mole % | Norm |
|---|---|---|---|
| Water Vapor | H2O | 0.0000 | 0.0000 |
| Methane | CH4 | 92.2700 | 92.2700 |
| Ethane | C2H6 | 2.5000 | 2.5000 |
| Propane | C3H8 | 0.5000 | 0.5000 |
| Isobutane | iso-C4H1O | 0.0000 | 0.0000 |
| Norbutane | nor-C4H1O | 0.2000 | 0.2000 |
| Isopentane | iso-C5H12 | 0.0000 | 0.0000 |
| Norpentane | nor-C5H12 | 0.1000 | 0.1000 |
| Hexane | C6H14 | 0.0500 | 0.0500 |
| Heptane | C7H16 | 0.0000 | 0.0000 |
| Nitrogen | N2 | 3.4800 | 3.4800 |
| Carbon Dioxide | CO2 | 0.9000 | 0.9000 |
| Hydrogen Sulfide | H2S | 0.0000 | 0.0000 |
| Carbon Monoxide | CO | 0.0000 | 0.0000 |
| Hydrogen | H2 | 0.0000 | 0.0000 |
| Oxygen | O2 | 0.0000 | 0.0000 |
| Helium | HE | 0.0000 | 0.0000 |
| Neopentane | neo-C5H12 | 0.0000 | 0.0000 |
| Octane | C8H18 | 0.0000 | 0.0000 |
| Nonane | C9H20 | 0.0000 | 0.0000 |
| Ethylene | C2H4 | 0.0000 | 0.0000 |
| Propylene | C3H6 | 0.0000 | 0.0000 |
| TOTAL (Volume %) | | 100.0000 | 100.0000 |

| | |
|---|---|
| Fuel Makeup: | Nat Gas |
| Unit of Measure: | English |

**Calculated Fuel Properties**

| | |
|---|---|
| Caterpillar Methane Number: | 84.8 |
| Lower Heating Value (Btu/scf): | 905 |
| Higher Heating Value (Btu/scf): | 1004 |
| WOBBE Index (Btu/scf): | 1168 |
| THC: Free Inert Ratio: | 21.83 |
| Total % Inerts (% N2, CO2, He): | 4.38% |
| RPC (%) (To 905 Btu/scf Fuel): | 100% |
| Compressibility Factor: | 0.998 |
| Stoich A/F Ratio (Vol/Vol): | 9.45 |
| Stoich A/F Ratio (Mass/Mass): | 15.75 |
| Specific Gravity (Relative to Air): | 0.600 |
| Specific Heat Constant (K): | 1.313 |

CONDITIONS AND DEFINITIONS

Caterpillar Methane Number represents the knock resistance of a gaseous fuel. It should be used with the Caterpillar Fuel Usage Guide for the engine and rating to determine the rating for the fuel specified. A Fuel Usage Guide for each rating is included on page 2 of its standard technical data sheet.

RPC always applies to naturally aspirated (NA) engines, and turbocharged (TA or LE) engines only when they are derated for altitude and ambient site conditions.

Project specific technical data sheets generated by the Caterpillar Gas Engine Rating Pro program take the Caterpillar Methane Number and RPC into account when generating a site rating.

Fuel properties for Btu/scf calculations are at 60F and 14.696 psia.

Caterpillar shall have no liability in law or equity, for damages, consequently or otherwise, arising from use of program and related material or any part thereof.

FUEL LIQUIDS

Field gases, well head gases, and associated gases typically contain liquid water and heavy hydrocarbons entrained in the gas. To prevent detonation and severe damage to the engine, hydrocarbon liquids must not be allowed to enter the engine fuel system. To remove liquids, a liquid separator and coalescing filter are recommended, with an automatic drain and collection tank to prevent contamination of the ground in accordance with local codes and standards.

To avoid water condensation in the engine or fuel lines, limit the relative humidity of water in the fuel to 80% at the minimum fuel operating temperature.

DCL America Inc.

1610 Woodstead Ct Suite 245, The Woodlands, Texas, 77380 USA
*Tel:* 877-897-9759 *Fax:* 281-605-5858 info@dcl-inc.com www.dcl-inc.com

| | | | |
|---|---|---|---|
| **To** | Jerry Mason | **Phone** | |
| | ISC | **Fax** | |
| **Date** | 17 January 2014 | **Email** | Jerry.Mason@ignition-systems.com |

**RE: EMISSIONS GUARANTEE**

Jerry,

We hereby guarantee that our QUICK-LID® Model DC63-10 catalytic converter described below:

| | |
|---|---|
| Catalyst model | DC63 |
| Catalyst coating | Oxidation, Q |
| Outside Diameter of catalyst substrate | 20.4" |
| No. of catalyst substrates | 1 |
| Cell Density | 300 cpsi |

and sized for the following engine:

| | |
|---|---|
| Engine model | CAT G3508ULB |
| Power | 690 bhp@1400 rpm |
| Fuel | Pipeline Quality Natural Gas |
| Approx. Exhaust Flow | 3735 acfm |
| Approx. Exhaust Temperature | 840˚F |

will perform as follows:

| Exhaust Gas Component | Converter Efficiency (% Reduction) |
|---|---|
| CO | 93 |
| VOC | 75 |
| Formaldehyde | 76 |

for a period of 1 year or 8000 hours, whichever comes first, subject to all terms and conditions contained in the attached warranty document being respected and met.

Best regards,
DCL America, Inc.

**William Casolara**
Senior Sales Engineer
North American Industrial Catalyst Division

# G3306 TA

GAS COMPRESSION APPLICATION

## GAS ENGINE SITE SPECIFIC TECHNICAL DATA
## G3306TAA Information

CATERPILLAR®

| | | | |
|---|---|---|---|
| ENGINE SPEED (rpm): | 1800 | FUEL SYSTEM: | HPG IMPCO |
| COMPRESSION RATIO: | 8.0:1 | **SITE CONDITIONS:** | |
| AFTERCOOLER WATER INLET (°F): | 90 | FUEL: | Field Gas |
| JACKET WATER OUTLET (°F): | 210 | FUEL PRESSURE RANGE(psig): | 12.0-24.9 |
| COOLING SYSTEM: | JW+OC, AC | FUEL METHANE NUMBER: | 62.2 |
| IGNITION SYSTEM: | MAG | FUEL LHV (Btu/scf): | 1027 |
| EXHAUST MANIFOLD: | WC | ALTITUDE(ft): | 1000 |
| COMBUSTION: | Standard | MAXIMUM INLET AIR TEMPERATURE(°F): | 100 |
| EXHAUST O2 EMISSION LEVEL %: | 2.0 | NAMEPLATE RATING: | 211 bhp@1800rpm |
| SET POINT TIMING: | 29.9 | | |

| | | | MAXIMUM RATING | SITE RATING AT MAXIMUM INLET AIR TEMPERATURE | | |
|---|---|---|---|---|---|---|
| **RATING** | **NOTES** | **LOAD** | **100%** | **100%** | **75%** | **51%** |
| ENGINE POWER | (1) | bhp | 211 | 206 | 154 | 105 |
| INLET AIR TEMPERATURE | | °F | 87 | 100 | 100 | 100 |
| **ENGINE DATA** | | | | | | |
| FUEL CONSUMPTION (LHV) | (2) | Btu/bhp-hr | 7803 | 7855 | 8433 | 9344 |
| FUEL CONSUMPTION (HHV) | (2) | Btu/bhp-hr | 8622 | 8680 | 9319 | 10325 |
| AIR FLOW | (3)(4) | lb/hr | 1464 | 1437 | 1159 | 881 |
| AIR FLOW WET (77°F, 14.7 psia) | (3)(4) | scfm | 330 | 324 | 261 | 199 |
| INLET MANIFOLD PRESSURE | (5) | in Hg(abs) | 39.0 | 38.3 | 31.1 | 23.4 |
| EXHAUST STACK TEMPERATURE | (6) | °F | 1068 | 1066 | 1041 | 995 |
| EXHAUST GAS FLOW (@ stack temp, 14.5 psia) | (7)(4) | ft3/min | 1040 | 1020 | 809 | 596 |
| EXHAUST GAS MASS FLOW | (7)(4) | lb/hr | 1542 | 1515 | 1222 | 929 |
| **EMISSIONS DATA** | | | | | | |
| NOx (as NO2) | (8) | g/bhp-hr | 27.28 | 26.98 | 23.85 | 20.70 |
| CO | (8) | g/bhp-hr | 2.00 | 2.01 | 2.08 | 1.99 |
| THC (mol. wt. of 15.84) | (8) | g/bhp-hr | 0.98 | 0.98 | 1.01 | 1.21 |
| NMHC (mol. wt. of 15.84) | (8) | g/bhp-hr | 0.25 | 0.25 | 0.26 | 0.31 |
| NMNEHC (VOCs) (mol. wt. of 15.84) | (8)(9) | g/bhp-hr | 0.17 | 0.17 | 0.18 | 0.21 |
| HCHO (Formaldehyde) | (8) | g/bhp-hr | 0.15 | 0.15 | 0.15 | 0.16 |
| CO2 | (8) | g/bhp-hr | 514 | 516 | 552 | 610 |
| EXHAUST OXYGEN | (10) | % DRY | 2.0 | 2.0 | 2.0 | 2.4 |
| **HEAT REJECTION** | | | | | | |
| HEAT REJ. TO JACKET WATER (JW) | (11) | Btu/min | 8105 | 8062 | 7199 | 6146 |
| HEAT REJ. TO ATMOSPHERE | (11) | Btu/min | 1095 | 1077 | 867 | 656 |
| HEAT REJ. TO LUBE OIL (OC) | (11) | Btu/min | 1282 | 1275 | 1138 | 972 |
| HEAT REJ. TO AFTERCOOLER (AC) | (11)(12) | Btu/min | 1067 | 1067 | 564 | 234 |

| **HEAT EXCHANGER SIZING CRITERIA** | | | |
|---|---|---|---|
| TOTAL JACKET WATER CIRCUIT (JW+OC) | (12) | Btu/min | 10454 |
| TOTAL AFTERCOOLER CIRCUIT (AC) | (12)(13) | Btu/min | 1120 |
| A cooling system safety factor of 0% has been added to the heat exchanger sizing criteria. | | | |

**CONDITIONS AND DEFINITIONS**

Engine rating obtained and presented in accordance with ISO 3046/1, adjusted for fuel, site altitude and site inlet air temperature.
100% rating at maximum inlet air temperature is the maximum engine capability for the specified fuel at site altitude and maximum site inlet air temperature.
Max. rating is the maximum capability for the specified fuel at site altitude and reduced inlet air temperature.
Lowest load point is the lowest continuous duty operating load allowed. No overload permitted at rating shown.

For notes information consult page three.

PREPARED BY: Keith Roberts, Natural Gas Services Group
Data generated by Gas Engine Rating Pro Version 3.03.01
Ref. Data Set DM5779-01-000, Printed 24Feb2010

## Engine Power vs. Inlet Air Temperature

Data represents temperature sweep at 1000 ft and 1800 rpm

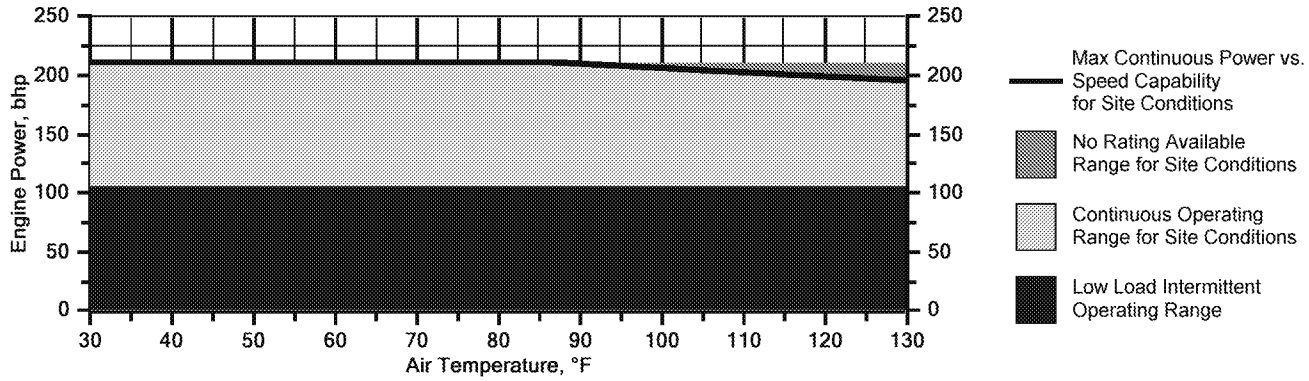


## Engine Power vs. Engine Speed

Data represents speed sweep at 1000 ft and 100 ºF

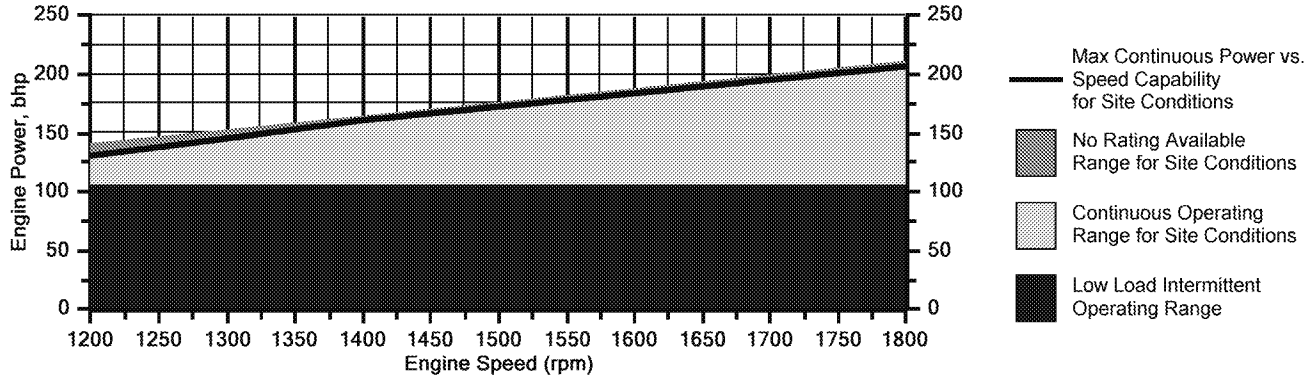


## Engine Torque vs. Engine Speed

Data represents speed sweep at 1000 ft and 100 ºF

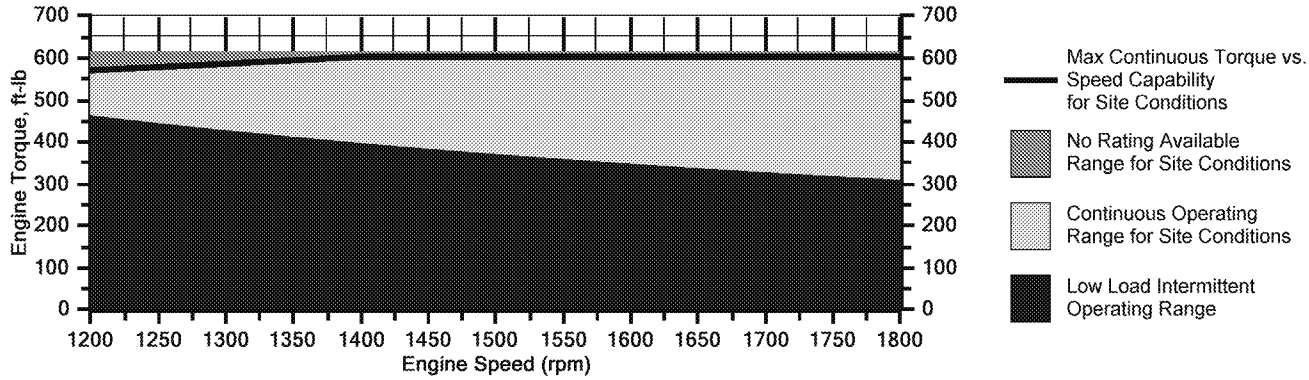


Note: At site conditions of 1000 ft and 100 ºF inlet air temp., constant torque can be maintained down to 1400 rpm. The minimum speed for loading at these conditions is 1200 rpm.

PREPARED BY: Keith Roberts, Natural Gas Services Group
Data generated by Gas Engine Rating Pro Version 3.03.01
Ref. Data Set DM5779-01-000, Printed 24Feb2010

**NOTES**

1. Engine rating is with two engine driven water pumps. Tolerance is ± 3% of full load.

2. Fuel consumption tolerance is ± 4.0% of full load data.

3. Undried air. Flow is a nominal value with a tolerance of ± 5 %.

4. Inlet and Exhaust Restrictions must not exceed A&I limits based on full load flow rates from the standard technical data sheet.

5. Inlet manifold pressure is a nominal value with a tolerance of ± 5 %.

6. Exhaust stack temperature is a nominal value with a tolerance of (+)63°F, (-)54°F.

7. Exhaust flow value is on a "wet" basis. Flow is a nominal value with a tolerance of ± 6 %.

8. Emission levels are at engine exhaust flange prior to any after treatment. Values are based on engine operating at steady state conditions. Fuel methane number cannot vary more than ± 3. Values listed are higher than nominal levels to allow for instrumentation, measurement, and engine-to-engine variations. They indicate "Not to Exceed" values. THC, NMHC, and NMNEHC do not include aldehydes. Part load data may require engine adjustment.

9. VOCs - Volatile organic compounds as defined in US EPA 40 CFR 60, subpart JJJJ

10. Exhaust Oxygen tolerance is ± 0.5.

11. Heat rejection values are nominal. Tolerances, based on treated water, are ± 10% for jacket water circuit, ± 50% for radiation, ± 20% for lube oil circuit, and ± 5% for aftercooler circuit.

12. Aftercooler heat rejection includes an aftercooler heat rejection factor for the site elevation and inlet air temperature specified. Aftercooler heat rejection values at part load are for reference only. Do not use part load data for heat exchanger sizing.

13. Heat exchanger sizing criteria are maximum circuit heat rejection for the site, with applied tolerances.

| Constituent | Abbrev | Mole % | Norm |
|---|---|---|---|
| Water Vapor | H2O | 2.5211 | 2.5211 |
| Methane | CH4 | 86.6340 | 86.6340 |
| Ethane | C2H6 | 4.9767 | 4.9767 |
| Propane | C3H8 | 3.5670 | 3.5670 |
| Isobutane | iso-C4H1O | 0.0000 | 0.0000 |
| Norbutane | nor-C4H1O | 1.8211 | 1.8211 |
| Isopentane | iso-C5H12 | 0.0000 | 0.0000 |
| Norpentane | nor-C5H12 | 0.4802 | 0.4802 |
| Hexane | C6H14 | 0.0000 | 0.0000 |
| Heptane | C7H16 | 0.0000 | 0.0000 |
| Nitrogen | N2 | 0.0000 | 0.0000 |
| Carbon Dioxide | CO2 | 0.0000 | 0.0000 |
| Hydrogen Sulfide | H2S | 0.0000 | 0.0000 |
| Carbon Monoxide | CO | 0.0000 | 0.0000 |
| Hydrogen | H2 | 0.0000 | 0.0000 |
| Oxygen | O2 | 0.0000 | 0.0000 |
| Helium | HE | 0.0000 | 0.0000 |
| Neopentane | neo-C5H12 | 0.0000 | 0.0000 |
| Octane | C8H18 | 0.0000 | 0.0000 |
| Nonane | C9H20 | 0.0000 | 0.0000 |
| Ethylene | C2H4 | 0.0000 | 0.0000 |
| Propylene | C3H6 | 0.0000 | 0.0000 |
| TOTAL (Volume %) | | 100.0000 | 100.0000 |

| | |
|---|---|
| Fuel Makeup: | Field Gas |
| Unit of Measure: | English |

**Calculated Fuel Properties**

| | |
|---|---|
| Caterpillar Methane Number: | 62.2 |
| Lower Heating Value (Btu/scf): | 1027 |
| Higher Heating Value (Btu/scf): | 1135 |
| WOBBE Index (Btu/scf): | 1274 |
| THC: Free Inert Ratio: | 0 |
| RPC (%) (To 905 Btu/scf Fuel): | 100% |
| Compressibility Factor: | 0.997 |
| Stoich A/F Ratio (Vol/Vol): | 10.68 |
| Stoich A/F Ratio (Mass/Mass): | 16.43 |
| Specific Gravity (Relative to Air): | 0.650 |
| Specific Heat Constant (K): | 1.297 |

CONDITIONS AND DEFINITIONS

Caterpillar Methane Number represents the knock resistance of a gaseous fuel. It should be used with the Caterpillar Fuel Usage Guide for the engine and rating to determine the rating for the fuel specified. A Fuel Usage Guide for each rating is included on page 2 of its standard technical data sheet.

RPC always applies to naturally aspirated (NA) engines, and turbocharged (TA or LE) engines only when they are derated for altitude and ambient site conditions.

Project specific technical data sheets generated by the Caterpillar Gas Engine Rating Pro program take the Caterpillar Methane Number and RPC into account when generating a site rating.

Fuel properties for Btu/scf calculations are at 60F and 14.696 psia.

Caterpillar shall have no liability in law or equity, for damages, consequently or otherwise, arising from use of program and related material or any part thereof.

FUEL LIQUIDS

Field gases, well head gases, and associated gases typically contain liquid water and heavy hydrocarbons entrained in the gas. To prevent detonation and severe damage to the engine, hydrocarbon liquids must not be allowed to enter the engine fuel system. To remove liquids, a liquid separator and coalescing filter are recommended, with an automatic drain and collection tank to prevent contamination of the ground in accordance with local codes and standards.

To avoid water condensation in the engine or fuel lines, limit the relative humidity of water in the fuel to 80% at the minimum fuel operating temperature.

EMIT Technologies, Inc
772 Airfield Lane
Sheridan, WY 82801
307.673.0883 Office
307.673.0886 Fax
cdosborn@emittechnologies.com

**PREPARED FOR:**

Natural Gas Services Group

**A. INFORMATION PROVIDED BY CATERPILLAR**

| | |
|---|---|
| Engine: | G3306TAA |
| DIM Sheet: | DM5779 |
| Compression Ratio: | 8.0:1 |
| RPM: | 1800 |
| Horsepower: | 211 |
| Fuel: | Natural Gas |
| Piping size: | 5" |
| Annual Operating Hours: | 8760 |
| Exhaust Flow: | 1026 CFM |
| Exhaust Temperature: | 1041 °F |
| Allowable Engine Backpressure: | 27" WC |

**Emission Data**

| | | |
|---|---|---|
| $NO_x$: | 27.52 | g/bhp-hr |
| CO: | 1.52 | g/bhp-hr |
| THC: | 1.11 | g/bhp-hr |
| NMHC: | 0.34 | g/bhp-hr |
| HCHO: | N/A | g/bhp-hr |
| Oxygen: | 2.00 | % |

**B. POST CATALYST EMISSIONS TO BE ACHIEVED BY EMISSION CONTROL EQUIPMENT**

| | |
|---|---|
| $NO_x$: | <0.5 g/bhp-hr |
| CO: | <0.5 g/bhp-hr |
| VOC: | <0.5 g/bhp-hr |

## C. CONTROL EQUIPMENT

### CATALYTIC CONVERTER/SILENCER UNIT

| | |
|---|---|
| Model | **EAS-1450T-0505F-D1SEE** |
| Catalyst Type | NSCR, Precious group metals |
| Manufacturer | EMIT Technologies, Inc. |
| Element Size | 14.5" x 3.5" |
| Catalyst Elements | 1 |
| Housing Type | Dual Bed |
| Catalyst Installation | Accessible Housing |
| Construction | 10 ga 304 Stainless Steel |
| Sample Ports | 6 (0.5" NPT) |
| Inlet Connections | 5" flat face flange |
| Outlet Connections | 5" flat face flange |
| Configuration | Assume End In / End Out |
| Silencer | Integrated |
| Silencer Grade | Critical |
| Insertion Loss | 20-25 dBA |

### AIR FUEL RATIO CONTROLLER

| | |
|---|---|
| Part Number | **ENG-S-075** |
| Manufacturer | EMIT Technologies, Inc. |
| Description | ***MODEL EDGE NG*** *CSA certified AFR controller kit complete with: EDGE NG Air Fuel Ratio Controller enclosure featuring: graphical display of oxygen sensor voltage, position of the digital power valve and thermocouple temperatures. Multiscreen digital display of controller and engine parameters. Integrated high temperature shutdown, Modbus enabled, 4 wire heated O2 sensor, O2 weldment, 25' Wiring harnesses, Digital power valve, Operations manual* ***SINGLE BANK ENGINE*** |
| Digital Power Valve Size | 0.75" NPT |

## D. WARRANTY

EMIT Technologies,Inc. warrants that the goods supplied will be free from defects in workmanship by EMIT Technologies, Inc. for a period of one (1) year from date of shipment. EMIT Technologies, Inc. will not be responsible for any defects which result from improper use, neglect, failure to properly maintain or which are attributable to defects, errors or omissions in any drawings, specifications, plans or descriptions, whether written or oral, supplied to EMIT Technologies, Inc. by Buyer.

Catalyst performance will be guaranteed for a period of 1 year from installation, or 8760 operating hours, whichever comes first. The catalyst shall be operated with an automatic air/fuel ratio controller. The performance guarantee shall not cover the effects of excessive ash masking due to operation at low load, improper engine maintenance, or inappropriate lubrication oil. The performance guarantee shall not cover the effects of continuous engine misfires (cylinder or ignition) exposing the catalyst to excessive exothermic reaction temperatures.

The exhaust temperature operating range at the converter inlet is 600°F minimum for oxidation catalyst and 750°F for NSCR catalyst and 1250°F maximum.

If a high temperature shut down switch is not installed, thermal deactivation of catalyst at temperatures above 1300°F is not covered.

The catalyst conversion efficiencies (% reduction) will be guaranteed for engine loads of 50 to 100 percent.

Engine lubrication oil shall contain less than 0.6% ash (by weight) with a maximum allowable specific oil consumption of 0.01 gal/bhp-hr. The maximum ash loading on the catalyst shall be limited to 350 g/m3. Phosphorous and zinc additives are limited to 0.03% (by weight).

The catalyst must not be exposed to the following know poisoning agents, including: iron, nickel, sodium, chromium, arsenic, zinc, lead, phosphorous, silicon, potassium, magnesium, copper, tin, and mercury. Total poison concentrations in the gas are limited to 0.3 ppm.

# CG137-8

GAS COMPRESSION APPLICATION

## GAS ENGINE SITE SPECIFIC TECHNICAL DATA
## CG137-8- Danny Rael

CATERPILLAR®

| | | | |
|---|---|---|---|
| ENGINE SPEED (rpm): | 1800 | RATING STRATEGY: | STANDARD |
| COMPRESSION RATIO: | 8.3 | RATING LEVEL: | CONTINUOUS |
| AFTERCOOLER TYPE: | SCAC | FUEL SYSTEM: | LPG IMPCO |
| AFTERCOOLER WATER INLET (°F): | 130 | | WITH CUSTOMER SUPPLIED AIR FUEL RATIO CONTROL |
| JACKET WATER OUTLET (°F): | 210 | **SITE CONDITIONS:** | |
| ASPIRATION: | TA | FUEL: | Field Gas |
| COOLING SYSTEM: | JW+OC, AC | FUEL PRESSURE RANGE(psig): | 1.5-5.0 |
| CONTROL SYSTEM: | ADEM4 | FUEL METHANE NUMBER: | 62.1 |
| EXHAUST MANIFOLD: | WC | FUEL LHV (Btu/scf): | 1027 |
| COMBUSTION: | CATALYST SETTING | ALTITUDE(ft): | 3200 |
| EXHAUST OXYGEN (% O2): | 0.5 | MAXIMUM INLET AIR TEMPERATURE(°F): | 100 |
| SET POINT TIMING: | 22 | STANDARD RATED POWER: | 400 bhp@1800rpm |

| | | | | MAXIMUM RATING | SITE RATING AT MAXIMUM INLET AIR TEMPERATURE | | |
|---|---|---|---|---|---|---|---|
| **RATING** | | **NOTES** | **LOAD** | **100%** | **100%** | **75%** | **50%** |
| ENGINE POWER | (WITHOUT FAN) | (1) | bhp | 400 | 400 | 300 | 200 |
| INLET AIR TEMPERATURE | | | °F | 100 | 100 | 100 | 100 |
| **ENGINE DATA** | | | | | | | |
| FUEL CONSUMPTION (LHV) | | (2) | Btu/bhp-hr | 7626 | 7626 | 8001 | 8806 |
| FUEL CONSUMPTION (HHV) | | (2) | Btu/bhp-hr | 8426 | 8426 | 8840 | 9731 |
| AIR FLOW (@inlet air temp, 14.7 psia) | (WET) | (3)(4) | ft3/min | 556 | 555 | 440 | 323 |
| AIR FLOW | (WET) | (3)(4) | lb/hr | 2362 | 2362 | 1873 | 1372 |
| FUEL FLOW (60ºF, 14.7 psia) | | | scfm | 49 | 49 | 39 | 29 |
| INLET MANIFOLD PRESSURE | | (5) | in Hg(abs) | 57.2 | 57.2 | 46.1 | 34.5 |
| EXHAUST TEMPERATURE - ENGINE OUTLET | | (6) | °F | 964 | 964 | 915 | 878 |
| EXHAUST GAS FLOW (@engine outlet temp, 14.5 psia) | (WET) | (7)(4) | ft3/min | 1583 | 1583 | 1211 | 864 |
| EXHAUST GAS MASS FLOW | (WET) | (7)(4) | lb/hr | 2508 | 2508 | 1988 | 1456 |
| **EMISSIONS DATA - ENGINE OUT** | | | | | | | |
| NOx (as NO2) | | (8)(9) | g/bhp-hr | 12.37 | 12.37 | 12.76 | 13.44 |
| CO | | (8)(9) | g/bhp-hr | 12.37 | 12.37 | 12.76 | 13.44 |
| THC (mol. wt. of 15.84) | | (8)(9) | g/bhp-hr | 1.92 | 1.92 | 2.12 | 2.36 |
| NMHC (mol. wt. of 15.84) | | (8)(9) | g/bhp-hr | 0.50 | 0.50 | 0.55 | 0.61 |
| NMNEHC (VOCs) (mol. wt. of 15.84) | | (8)(9)(10) | g/bhp-hr | 0.34 | 0.34 | 0.37 | 0.41 |
| HCHO (Formaldehyde) | | (8)(9) | g/bhp-hr | 0.06 | 0.06 | 0.10 | 0.09 |
| CO2 | | (8)(9) | g/bhp-hr | 471 | 471 | 497 | 544 |
| EXHAUST OXYGEN | | (8)(11) | % DRY | 0.4 | 0.4 | 0.4 | 0.4 |
| **HEAT REJECTION** | | | | | | | |
| HEAT REJ. TO JACKET WATER (JW) | | (12) | Btu/min | 17459 | 17459 | 14729 | 11982 |
| HEAT REJ. TO ATMOSPHERE | | (12) | Btu/min | 2032 | 2032 | 1599 | 1173 |
| HEAT REJ. TO LUBE OIL (OC) | | (12) | Btu/min | 2358 | 2358 | 1989 | 1618 |
| HEAT REJ. TO AFTERCOOLER (AC) | | (12)(13) | Btu/min | 1985 | 1985 | 1313 | 648 |

| **COOLING SYSTEM SIZING CRITERIA** | | | |
|---|---|---|---|
| TOTAL JACKET WATER CIRCUIT (JW+OC) | (13) | Btu/min | 22034 |
| TOTAL AFTERCOOLER CIRCUIT (AC) | (13)(14) | Btu/min | 2084 |
| A cooling system safety factor of 0% has been added to the cooling system sizing criteria. | | | |

**CONDITIONS AND DEFINITIONS**

Engine rating obtained and presented in accordance with ISO 3046/1, adjusted for fuel, site altitude and site inlet air temperature. 100% rating at maximum inlet air temperature is the maximum engine capability for the specified fuel at site altitude and maximum site inlet air temperature. Maximum rating is the maximum capability at the specified aftercooler inlet temperature for the specified fuel at site altitude and reduced inlet air temperature. Lowest load point is the lowest continuous duty operating load allowed. No overload permitted at rating shown.

For notes information consult page three.

PREPARED BY: Bradley Johnson, Compressor Systems Inc.
Data generated by Gas Engine Rating Pro Version 5.00.00
Ref. Data Set DM9293-00-001, Printed 21Nov2014

## Engine Power vs. Inlet Air Temperature

Data represents temperature sweep at 3200 ft and 1800 rpm

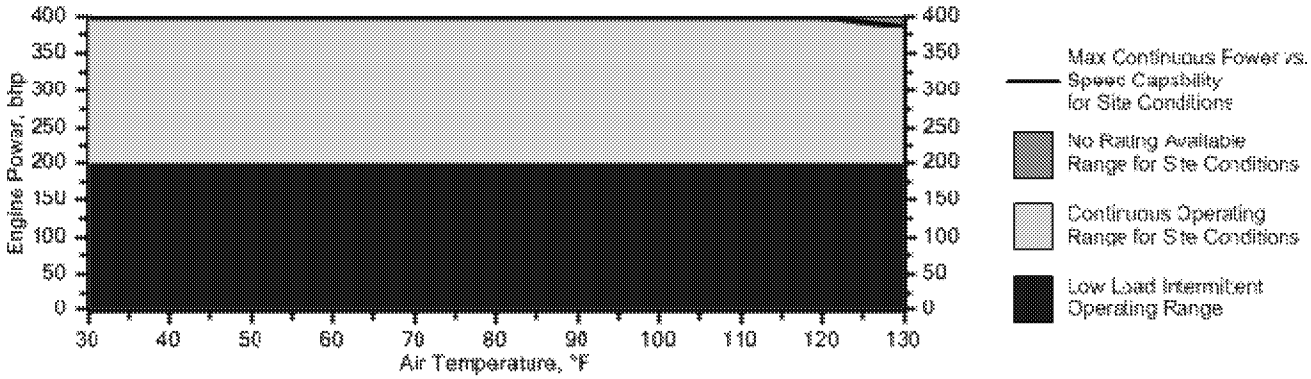


## Engine Power vs. Engine Speed

Data represents speed sweep at 3200 ft and 100 °F

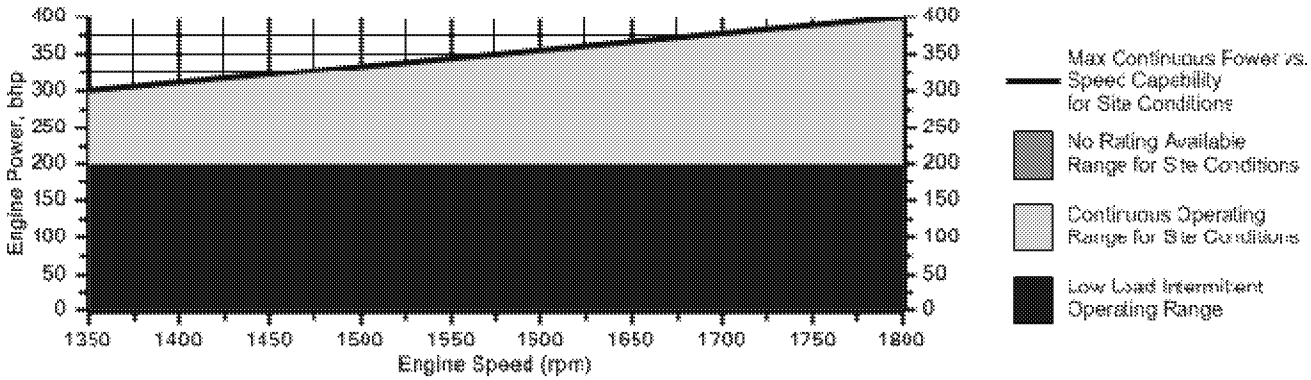


## Engine Torque vs. Engine Speed

Data represents speed sweep at 3200 ft and 100 °F

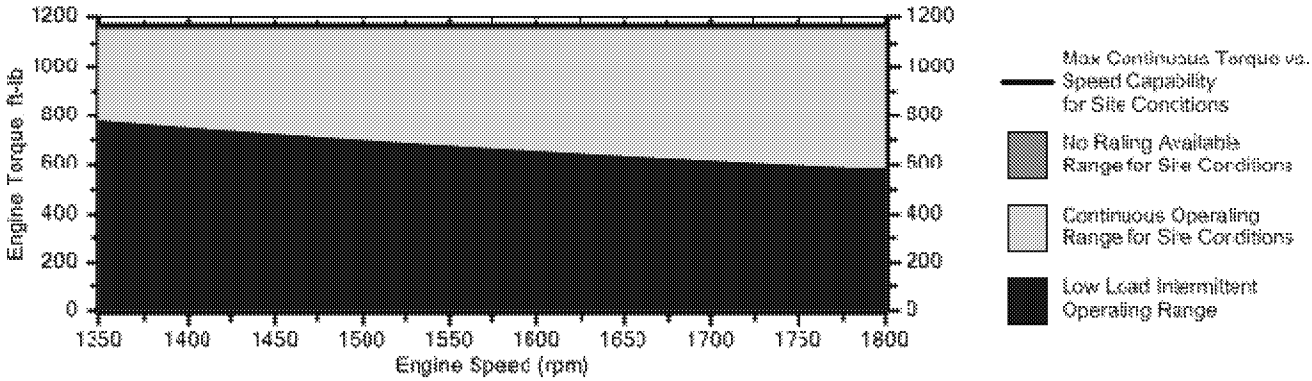


Note: At site conditions of 3200 ft and 100°F inlet air temp., constant torque can be maintained down to 1350 rpm. The minimum speed for loading at these conditions is 1350 rpm.

## NOTES

1. Engine rating is with two engine driven water pumps. Tolerance is ± 3% of full load.

2. Fuel consumption tolerance is ± 5.0% of full load data.

3. Air flow value is on a 'wet' basis. Flow is a nominal value with a tolerance of ± 5 %.

4. Inlet and Exhaust Restrictions must not exceed A&I limits based on full load flow rates from the standard technical data sheet.

5. Inlet manifold pressure is a nominal value with a tolerance of ± 5 %.

6. Exhaust temperature is a nominal value with a tolerance of (+)63°F, (-)54°F.

7. Exhaust flow value is on a "wet" basis. Flow is a nominal value with a tolerance of ± 6 %.

8. Emissions data is at engine exhaust flange prior to any after treatment.

9. Emission values are based on engine operating at steady state conditions. Fuel methane number cannot vary more than ± 3. Values listed are higher than nominal levels to allow for instrumentation, measurement, and engine-to-engine variations. They indicate "Not to Exceed" values. THC, NMHC, and NMNEHC do not include aldehydes. Part Load data requires customer supplied air fuel ratio control.

10. VOCs - Volatile organic compounds as defined in US EPA 40 CFR 60, subpart JJJJ

11. Exhaust Oxygen tolerance is ± 0.2.

12. Heat rejection values are nominal. Tolerances, based on treated water, are ± 10% for jacket water circuit, ± 50% for radiation, ± 20% for lube oil circuit, and ± 5% for aftercooler circuit.

13. Aftercooler heat rejection includes an aftercooler heat rejection factor for the site elevation and inlet air temperature specified. Aftercooler heat rejection values at part load are for reference only. Do not use part load data for heat exchanger sizing.

14. Cooling system sizing criteria are maximum circuit heat rejection for the site, with applied tolerances.

| Constituent | Abbrev | Mole % | Norm |
|---|---|---|---|
| Water Vapor | H2O | 2.5211 | 2.5211 |
| Methane | CH4 | 86.6340 | 86.6340 |
| Ethane | C2H6 | 4.9767 | 4.9767 |
| Propane | C3H8 | 3.5670 | 3.5670 |
| Isobutane | iso-C4H1O | 0.0000 | 0.0000 |
| Norbutane | nor-C4H1O | 1.8211 | 1.8211 |
| Isopentane | iso-C5H12 | 0.0000 | 0.0000 |
| Norpentane | nor-C5H12 | 0.4802 | 0.4802 |
| Hexane | C6H14 | 0.0000 | 0.0000 |
| Heptane | C7H16 | 0.0000 | 0.0000 |
| Nitrogen | N2 | 0.0000 | 0.0000 |
| Carbon Dioxide | CO2 | 0.0000 | 0.0000 |
| Hydrogen Sulfide | H2S | 0.0000 | 0.0000 |
| Carbon Monoxide | CO | 0.0000 | 0.0000 |
| Hydrogen | H2 | 0.0000 | 0.0000 |
| Oxygen | O2 | 0.0000 | 0.0000 |
| Helium | HE | 0.0000 | 0.0000 |
| Neopentane | neo-C5H12 | 0.0000 | 0.0000 |
| Octane | C8H18 | 0.0000 | 0.0000 |
| Nonane | C9H20 | 0.0000 | 0.0000 |
| Ethylene | C2H4 | 0.0000 | 0.0000 |
| Propylene | C3H6 | 0.0000 | 0.0000 |
| TOTAL (Volume %) | | 100.0000 | 100.0000 |

| | |
|---|---|
| Fuel Makeup: | Field Gas |
| Unit of Measure: | English |

**Calculated Fuel Properties**

| | |
|---|---|
| Caterpillar Methane Number: | 62.1 |
| Lower Heating Value (Btu/scf): | 1027 |
| Higher Heating Value (Btu/scf): | 1135 |
| WOBBE Index (Btu/scf): | 1274 |
| THC: Free Inert Ratio: | Not Applicable |
| Total % Inerts (% N2, CO2, He): | 0% |
| RPC (%) (To 905 Btu/scf Fuel): | 100% |
| Compressibility Factor: | 0.997 |
| Stoich A/F Ratio (Vol/Vol): | 10.68 |
| Stoich A/F Ratio (Mass/Mass): | 16.43 |
| Specific Gravity (Relative to Air): | 0.650 |
| Specific Heat Constant (K): | 1.297 |

**CONDITIONS AND DEFINITIONS**

Caterpillar Methane Number represents the knock resistance of a gaseous fuel. It should be used with the Caterpillar Fuel Usage Guide for the engine and rating to determine the rating for the fuel specified. A Fuel Usage Guide for each rating is included on page 2 of its standard technical data sheet.

RPC always applies to naturally aspirated (NA) engines, and turbocharged (TA or LE) engines only when they are derated for altitude and ambient site conditions.

Project specific technical data sheets generated by the Caterpillar Gas Engine Rating Pro program take the Caterpillar Methane Number and RPC into account when generating a site rating.

Fuel properties for Btu/scf calculations are at 60F and 14.696 psia.

Caterpillar shall have no liability in law or equity, for damages, consequently or otherwise, arising from use of program and related material or any part thereof.

**FUEL LIQUIDS**

Field gases, well head gases, and associated gases typically contain liquid water and heavy hydrocarbons entrained in the gas. To prevent detonation and severe damage to the engine, hydrocarbon liquids must not be allowed to enter the engine fuel system. To remove liquids, a liquid separator and coalescing filter are recommended, with an automatic drain and collection tank to prevent contamination of the ground in accordance with local codes and standards.

To avoid water condensation in the engine or fuel lines, limit the relative humidity of water in the fuel to 80% at the minimum fuel operating temperature.

PREPARED BY: Bradley Johnson, Compressor Systems Inc.
Data generated by Gas Engine Rating Pro Version 5.00.00
Ref. Data Set DM9293-00-001, Printed 21Nov2014

# Engine Performance Data

**Cummins Inc**

Columbus, Indiana 47202-3005
http://www.cummins.com

Industrial

**QSL9G**

**FR93065**

**175 BHP (130 kW) @ 1800 RPM**
**511 lb-ft (693 N-m) @ 1800 RPM**

| Configuration | CPL Code | Revision |
|---|---|---|
| **D883003CX03** | **3410** | **2-Jan-2012** |

Compression Ratio: **9.7:1**
Displacement: **543 in3 (8.9 L)**
Fuel System: **Field Gas, Dry Processed Nat Gas**
Aspiration: **Turbocharged and Aftercooled**
Emission Certification: **Catalyst, 2011 NSPS Factory Certified using factory supplied AFR, PE9176 and 800-1050 LHV BTU fuel, Wet Exhaust**

All data is based on the engine operating with fuel system, water pump, and 8 in H2O (1.99 kPa) inlet air restriction with 3 in (76 mm) inner diameter, and with 1 in Hg (3 kPa) exhaust restriction with 3 in (76 mm) inner diameter; not included are alternator, fan, optional equipment and driven components. Coolant flows and heat rejection data based on coolants as 50% ethylene glycol/50% water. All data is subject to change without notice.

## Rating Type: Continuous/WMR

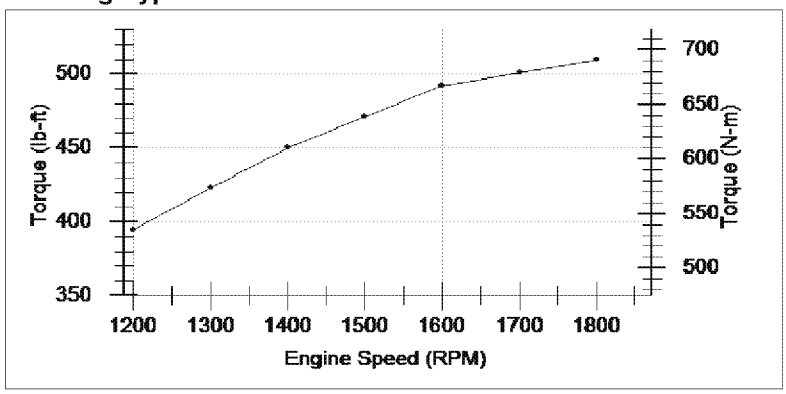


### Torque Output

| RPM | lb-ft | N-m |
|---|---|---|
| 1,200 | 395 | 536 |
| 1,300 | 423 | 574 |
| 1,400 | 450 | 610 |
| 1,500 | 471 | 639 |
| 1,600 | 492 | 667 |
| 1,700 | 501 | 679 |
| 1,800 | 510 | 691 |

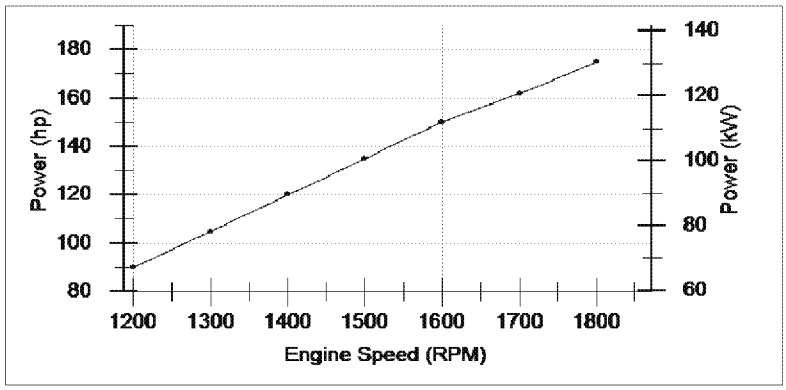


### Power Output

| RPM | hp | kW |
|---|---|---|
| 1,200 | 90 | 67 |
| 1,300 | 105 | 78 |
| 1,400 | 120 | 89 |
| 1,500 | 135 | 101 |
| 1,600 | 150 | 112 |
| 1,700 | 162 | 121 |
| 1,800 | 175 | 130 |

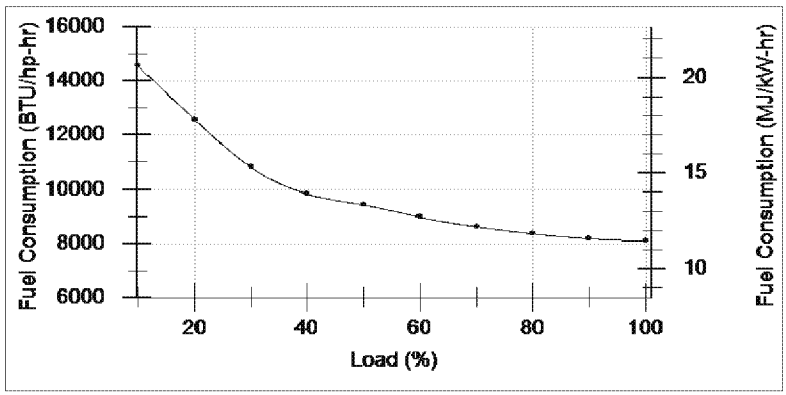


### Fuel Consumption @ 1,800 RPM

| hp | kW | % Load | BTU/hp-hr | MJ/kW-hr |
|---|---|---|---|---|
| 175 | 130 | 100 | 8,086 | 11.44 |
| 156 | 116 | 90 | 8,175 | 11.57 |
| 140 | 104 | 80 | 8,352 | 11.82 |
| 123 | 92 | 70 | 8,618 | 12.19 |
| 105 | 78 | 60 | 8,973 | 12.69 |
| 88 | 66 | 50 | 9,417 | 13.32 |
| 70 | 52 | 40 | 9,828 | 13.9 |
| 53 | 40 | 30 | 10,821 | 15.31 |
| 35 | 26 | 20 | 12,580 | 17.8 |
| 18 | 13 | 10 | 14,548 | 20.58 |

Data represents gross engine capabilities obtained and corrected in accordance with SAE J1995 using dry processed natural gas fuel with 953 BTU per standard cubic foot lower heating value. Deration may be required due to altitude, temperature and type of fuel. Consult Cummins Customer Engineering with operating questions.

**STATUS FOR CURVES AND DATA: Preliminary-(Estimated data)**
**Tolerance: Within +/- 5%**

**CHIEF ENGINEER:**
**Alfred S Weber**


**© 2011, Cummins Inc., All Rights Reserved**
**Cummins Confidential and Proprietary**
**Controlled copy is located on gce.cummins.com**

## Intake Air System

| | | | | |
|---|---|---|---|---|
| Maximum allowable air temperature rise over ambient at Intake Manifold (Naturally Aspirated Engines) or Turbo Compressor inlet (Turbo-charged Engines): (This parameter impacts emissions, LAT and/or altitude capability) | 30 | delta deg F | 16.7 | delta deg C |

## Low Temperature Aftercooling System

| | | | | |
|---|---|---|---|---|
| Coolant temperature from the Aftercooler outlet @ Maximum engine coolant out temperature at Limiting Ambient Temperature: | | | | |
| Maximum coolant temperature into the Aftercooler @ 25C (77F) ambient: | | | | |
| Maximum coolant temperature into Aftercooler @ Limiting Ambient conditions: | 130 | deg F | 54 | deg C |
| Maximum coolant temperature for engine protection controls: | 193 | deg F | 89 | deg C |
| Maximum coolant operating temperature at engine outlet (max. top tank temp): | 186 | deg F | 86 | deg C |

## Exhaust System

| | | | | |
|---|---|---|---|---|
| Maximum exhaust back pressure: | 2 | in-Hg | 7 | kPa |
| Recommended exhaust piping size (inner diameter): | 3 | in | 76 | mm |

## Lubrication System

| | | | | |
|---|---|---|---|---|
| Nominal operating oil pressure | | | | |
| @ minimum low idle | 10 | psi | 69 | kPa |
| @ maximum rated speed | 60 | psi | 414 | kPa |
| Minimum engine oil pressure for engine protection devices | | | | |
| @ minimum low idle | 10 | psi | 69 | kPa |

## Fuel System

| | | | | |
|---|---|---|---|---|
| Minimum fuel inlet pressure: | 7 | psi | 48 | kPa |
| Maximum fuel inlet pressure: | 25 | psi | 172 | kPa |

## Performance Data

| | | | | |
|---|---|---|---|---|
| Engine low idle speed: | 1,200 | RPM | | |
| Maximum low idle speed: | 1,800 | RPM | | |
| Minimum low idle speed: | 1,200 | RPM | | |
| Engine high idle speed: | 1,800 | RPM | | |
| Governor break speed: | | | | |
| Maximum torque available at closed throttle low idle speed: | 50 | lb-ft | 68 | N-m |

| | 100% Load | | | | 75% Load | | | | 50% Load | | | |
|---|---|---|---|---|---|---|---|---|---|---|---|---|
| **Engine Rating** | | | | | | | | | | | | |
| Engine Speed | 1,800 | RPM | | | 1,800 | RPM | | | 1,800 | RPM | | |
| Output Power | 175 | hp | 130 | kW | 131 | hp | 98 | kW | 88 | hp | 66 | kW |
| Torque | 511 | lb-ft | 693 | N-m | 382 | lb-ft | 518 | N-m | 257 | lb-ft | 348 | N-m |
| **Performance Data** | | | | | | | | | | | | |
| Intake Manifold Pressure | 39 | in-Hg | 132 | kPa | 30 | in-Hg | 101 | kPa | 22 | in-Hg | 74 | kPa |
| Turbo Comp. Outlet Pressure | 57 | in-Hg | 192 | kPa | 46 | in-Hg | 155 | kPa | 37 | in-Hg | 125 | kPa |
| Turbo Comp. Outlet Temperature | 277 | deg F | 136 | deg C | 225 | deg F | 107 | deg C | 174 | deg F | 79 | deg C |
| Inlet Air Flow | 302 | $ft^3$/min | 143 | L/s | 234 | $ft^3$/min | 110 | L/s | 173 | $ft^3$/min | 82 | L/s |
| Charge Air Flow | | lb/min | | kg/min | | lb/min | | kg/min | | lb/min | | kg/min |
| Exhaust Gas Flow | 882 | $ft^3$/min | 416 | L/s | 696 | $ft^3$/min | 328 | L/s | 517 | $ft^3$/min | 244 | L/s |
| Exhaust Gas Temperature (TIT) | 1,077 | deg F | 581 | deg C | 1,062 | deg F | 572 | deg C | 1,030 | deg F | 554 | deg C |
| Fuel Consumption | 8,086 | BTU/hp-hr | 11 | MJ/kW-hr | 8,485 | BTU/hp-hr | 12 | MJ/kW-hr | 9,417 | BTU/hp-hr | 13 | MJ/kW-hr |
| Air Fuel Ratio (Dry) | | | | | | | | | | | | |
| Ignition Timing (BTDC) | 24 | deg | 24 | deg | 24 | deg | 24 | deg | 24 | deg | 24 | deg |
| **Heat Balance** | | | | | | | | | | | | |
| Heat Rejection to Coolant | 7,682 | BTU/min | 135 | kW | 6,428 | BTU/min | 113 | kW | 5,255 | BTU/min | 92 | kW |
| Heat Reject to Aftercooler Coolant | 887 | BTU/min | 16 | kW | 626 | BTU/min | 11 | kW | 428 | BTU/min | 8 | kW |
| Heat Rejection to Exhaust | 5,584 | BTU/min | 98 | kW | 4,273 | BTU/min | 75 | kW | 3,076 | BTU/min | 54 | kW |
| Heat Rejection to Ambient | 2,041 | BTU/min | 36 | kW | 1,659 | BTU/min | 29 | kW | 1,359 | BTU/min | 24 | kW |
| **Emissions** | | | | | | | | | | | | |
| Volatile Organic Compounds (VOC) | 0.7 | g/hp-hr | | | | | | | | | | |
| VOC ppm without Catalyst | | | | | | | | | | | | |
| VOC ppm with Catalyst | 451 | | | | | | | | | | | |
| $NO_x$ (BS) | 0.5 | g/hp-hr | 0.67 | g/kW-hr | | | | | | | | |
| $NO_x$ ppm without Catalyst | | | | | | | | | | | | |
| $NO_x$ ppm with Catalyst | 100 | | | | | | | | | | | |
| CO (BS) | 2 | g/hp-hr | 2.68 | g/kW-hr | | | | | | | | |
| CO ppm without Catalyst | | | | | | | | | | | | |
| CO ppm with Catalyst | 650 | | | | | | | | | | | |
| $CO_2$ (BS) | 456 | g/hp-hr | 612 | g/kW-hr | | | | | | | | |
| HCHO (BS Formaldehyde*) | 0.004 | g/hp-hr | 0.005 | g/kW-hr | 0.004 | g/hp-hr | 0.005 | g/kW-hr | 0.004 | g/hp-hr | 0.005 | g/kW-hr |
| HCHO ppm without Catalyst | | | | | | | | | | | | |
| HCHO ppm with Catalyst | | | | | | | | | | | | |
| $O_2$% | 0.4 | % | | | | | | | | | | |

*Formaldehyde (HCHO) value is an estimate based upon EPA's AP-42 emissions factor and an assumed representative fuel flow.

**© 2011, Cummins Inc., All Rights Reserved**
**Cummins Confidential and Proprietary**
**Controlled copy is located on gce.cummins.com**

## Cranking System (Cold Starting Capability)

Unaided Cold Start:

| | | |
|---|---|---|
| Minimum cranking speed | 250 RPM | |
| Breakaway torque at minimum unaided cold start temperature: | 480 lb-ft | 651 N-m |

Cold starting aids available

Maximum parasitic load at 10 deg F @

**Aftercooler Heat Rejection - Heat Load on Aftercooler**

BTU/min (kW)

| Altitude ft (m) | Ambient Temp deg F (deg C) 120 (49) | 110 (43) | 100 (38) | 90 (32) | 80 (27) | 70 (21) |
|---|---|---|---|---|---|---|
| **0 (0)** | 799 (14.0) | 733 (12.9) | 671 (11.8) | 613 (10.8) | 559 (9.8) | 509 (9.0) |
| **1000 (305)** | 869 (15.3) | 800 (14.1) | 734 (12.9) | 672 (11.8) | 614 (10.8) | 560 (9.8) |
| **2000 (610)** | 944 (16.6) | 870 (15.3) | 800 (14.1) | 735 (12.9) | 673 (11.8) | 615 (10.8) |
| **3000 (914)** | 1,022 (18.0) | 945 (16.6) | 871 (15.3) | 801 (14.1) | 735 (12.9) | 673 (11.8) |
| **4000 (1219)** | 1,105 (19.4) | 1,023 (18.0) | 946 (16.6) | 872 (15.3) | 802 (14.1) | 736 (12.9) |
| **5000 (1524)** | 1,191 (20.9) | 1,106 (19.4) | 1,024 (18.0) | 947 (16.7) | 873 (15.4) | 803 (14.1) |
| **6000 (1829)** | 1,191 (20.9) | 1,106 (19.4) | 1,024 (18.0) | 947 (16.7) | 873 (15.4) | 803 (14.1) |
| **7000 (2134)** | 1,191 (20.9) | 1,106 (19.4) | 1,024 (18.0) | 947 (16.7) | 873 (15.4) | 803 (14.1) |
| **8000 (2438)** | 1,191 (20.9) | 1,106 (19.4) | 1,024 (18.0) | 947 (16.7) | 873 (15.4) | 803 (14.1) |
| **9000 (2743)** | 1,191 (20.9) | 1,106 (19.4) | 1,024 (18.0) | 947 (16.7) | 873 (15.4) | 803 (14.1) |
| **10000 (3048)** | 1,191 (20.9) | 1,106 (19.4) | 1,024 (18.0) | 947 (16.7) | 873 (15.4) | 803 (14.1) |

**End of Report**

**© 2011, Cummins Inc., All Rights Reserved**
**Cummins Confidential and Proprietary**
**Controlled copy is located on gce.cummins.com**

# Engine Performance Data

**Cummins Inc**

Columbus, Indiana 47202-3005
http://www.cummins.com

Industrial

**G8.3**

**FR92224**

**118 BHP (88 kW) @ 1800 RPM**
**344 lb-ft (466 N-m) @ 1800 RPM**

| Configuration | CPL Code | Revision |
|---|---|---|
| **D551013CX03** | **2474** | **13-May-2011** |

| | | | |
|---|---|---|---|
| Compression Ratio: | **10.5:1** | Displacement: | **505 in3 (8.3 L)** |
| Fuel System: | **Field Gas, Dry Processed Nat Gas** | Aspiration: | **Naturally Aspirated** |
| Emission Certification: | **Non-certified, Catalyst** | | |

All data is based on the engine operating with fuel system, water pump, and 6 in H2O (1.49 kPa) inlet air restriction with 3 in (76 mm) inner diameter, and with 1 in Hg (3 kPa) exhaust restriction with 3 in (76 mm) inner diameter; not included are alternator, fan, optional equipment and driven components. Coolant flows and heat rejection data based on coolants as 50% ethylene glycol/50% water. All data is subject to change without notice.

## Rating Type: Continuous/WMR

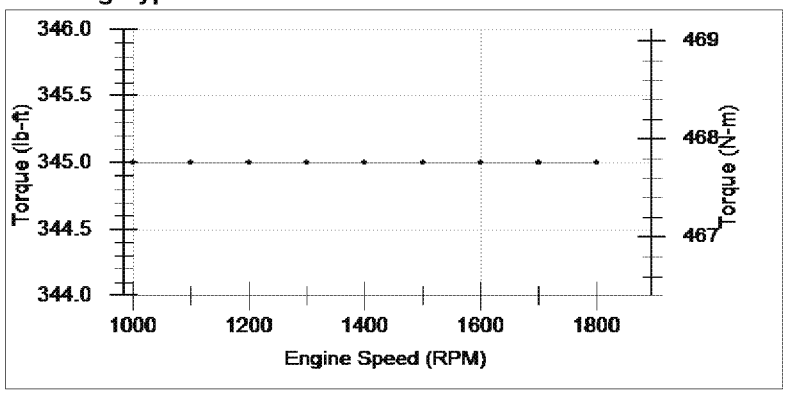


### Torque Output

| RPM | lb-ft | N-m |
|---|---|---|
| 1,000 | 345 | 468 |
| 1,100 | 345 | 468 |
| 1,200 | 345 | 468 |
| 1,300 | 345 | 468 |
| 1,400 | 345 | 468 |
| 1,500 | 345 | 468 |
| 1,600 | 345 | 468 |
| 1,700 | 345 | 468 |
| 1,800 | 345 | 468 |

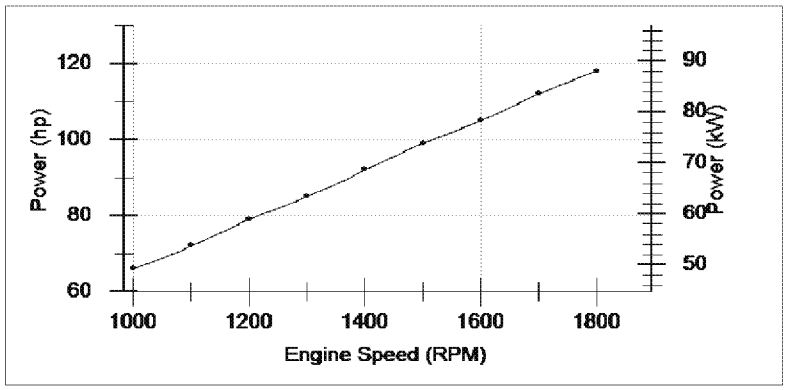


### Power Output

| RPM | hp | kW |
|---|---|---|
| 1,000 | 66 | 49 |
| 1,100 | 72 | 54 |
| 1,200 | 79 | 59 |
| 1,300 | 85 | 63 |
| 1,400 | 92 | 69 |
| 1,500 | 99 | 74 |
| 1,600 | 105 | 78 |
| 1,700 | 112 | 84 |
| 1,800 | 118 | 88 |

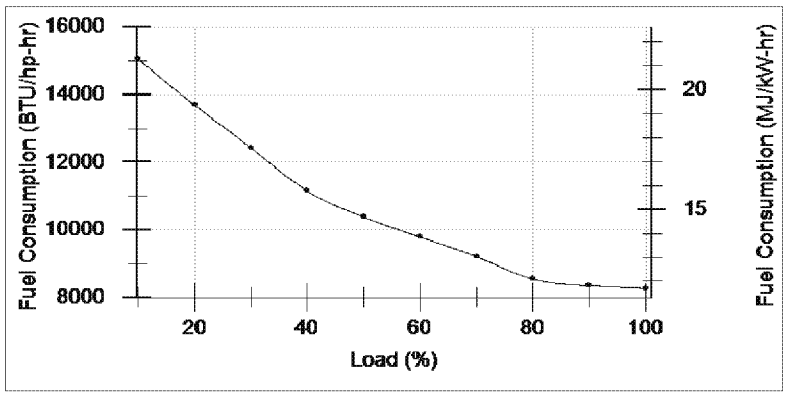


### Fuel Consumption @

| hp | kW | % Load | BTU/hp-hr | MJ/kW-hr |
|---|---|---|---|---|
| **118** | **88** | 100 | 8,266 | 11.69 |
| **106** | **79** | 90 | 8,350 | 11.81 |
| **94** | **70** | 80 | 8,553 | 12.1 |
| **83** | **62** | 70 | 9,211 | 13.03 |
| **71** | **53** | 60 | 9,790 | 13.85 |
| **59** | **44** | 50 | 10,383 | 14.69 |
| **47** | **35** | 40 | 11,155 | 15.78 |
| **24** | **18** | 30 | 12,424 | 17.58 |
| **12** | **9** | 20 | 13,689 | 19.37 |
| | | 10 | 15,047 | 21.29 |

Data represents gross engine capabilities obtained and corrected in accordance with SAE J1995 using dry processed natural gas fuel with 935 BTU per standard cubic foot lower heating value. Deration may be required due to altitude, temperature and type of fuel. Consult Cummins Customer Engineering with operating questions.

**STATUS FOR CURVES AND DATA: Beta-(Measured data)**
**Tolerance: Within +/- 5%**

**CHIEF ENGINEER:**
**Alfred S Weber**

Bold entries revised after 1-Mar-2010

**© 2010, Cummins Inc., All Rights Reserved**
**Cummins Confidential and Proprietary**
**Controlled copy is located on gce.cummins.com**

## Intake Air System

| | | |
|---|---|---|
| Maximum allowable air temperature rise over ambient at Intake Manifold (Naturally Aspirated Engines) or Turbo Compressor inlet (Turbo-charged Engines): (This parameter impacts emissions, LAT and/or altitude capability) | 15 delta deg F | 8.3 delta deg C |

## Cooling System

| | | |
|---|---|---|
| Maximum coolant temperature for engine protection controls | 215 deg F | 102 deg C |
| Maximum coolant operating temperature at engine outlet (max. top tank temp): | 212 deg F | 100 deg C |

## Exhaust System

| | | |
|---|---|---|
| Maximum exhaust back pressure: | 2 in-Hg | 7 kPa |
| Recommended exhaust piping size (inner diameter): | 3 in | 76 mm |

## Lubrication System

| | | |
|---|---|---|
| Nominal operating oil pressure | | |
| @ minimum low idle | 10 psi | 69 kPa |
| @ maximum rated speed | 50 psi | 345 kPa |
| Minimum engine oil pressure for engine protection devices | | |
| @ minimum low idle | 10 psi | 69 kPa |

## Fuel System

| | | |
|---|---|---|
| Minimum fuel inlet pressure: | 0 psi | 2 kPa |
| Maximum fuel inlet pressure: | 1 psi | 5 kPa |

## Performance Data

| | | |
|---|---|---|
| Engine low idle speed: | 900 RPM | |
| Maximum low idle speed: | 1,800 RPM | |
| Minimum low idle speed: | 800 RPM | |
| Engine high idle speed | 1,800 RPM | |
| Governor break speed: | | |
| Maximum torque available at closed throttle low idle speed: | 50 lb-ft | 68 N-m |

| | 100% Load | | 75% Load | | 50% Load | |
|---|---|---|---|---|---|---|
| Engine Speed | 1,800 RPM | | 1,800 RPM | | 1,800 RPM | |
| Output Power | 118 hp | 88 kW | 89 hp | 66 kW | 59 hp | 44 kW |
| Torque | 344 lb-ft | 466 N-m | 260 lb-ft | 353 N-m | 172 lb-ft | 233 N-m |
| Intake Manifold Pressure | -1 in-Hg | -3 kPa | -2 in-Hg | -8 kPa | -4 in-Hg | -14 kPa |
| Inlet Air Flow | 170 ft3/min | 80 L/s | 142 ft3/min | 67 L/s | 111 ft3/min | 52 L/s |
| Exhaust Gas Flow | 604 ft3/min | 285 L/s | 501 ft3/min | 236 L/s | 383 ft3/min | 181 L/s |
| Exhaust Gas Temperature | 1,374 deg F | 746 deg C | 1,349 deg F | 732 deg C | 1,303 deg F | 706 deg C |
| Heat Rejection to Coolant | 4,034 BTU/min | 71 kW | 3,717 BTU/min | 65 kW | 3,309 BTU/min | 58 kW |
| Heat Rejection to Ambient | 1,301 BTU/min | 23 kW | 820 BTU/min | 14 kW | 638 BTU/min | 11 kW |
| Heat Rejection to Exhaust | 4,183 BTU/min | 74 kW | 3,438 BTU/min | 60 kW | 2,602 BTU/min | 46 kW |
| Fuel Consumption | 8,266 BTU/hp-hr | 12 MJ/kW-hr | 8,908 BTU/hp-hr | 13 MJ/kW-hr | 10,383 BTU/hp-hr | 15 MJ/kW-hr |
| Air Fuel Ratio (dry) | 16.2 vol/vol | | 16.2 vol/vol | | 16.2 vol/vol | |
| Ignition timing (BTDC) | 26 deg | 26 deg | 26 deg | 26 deg | 26 deg | 26 deg |
| Total Hydrocarbons | 2.75 g/hp-hr | | 3.19 g/hp-hr | | 4.37 g/hp-hr | |
| VOC ppm w/o Catalyst | | | | | | |
| VOC ppm with Catalyst | | | | | | |
| NOx | 11.6 g/hp-hr | 15.56 g/kW-hr | 11 g/hp-hr | 14.75 g/kW-hr | 8 g/hp-hr | 10.73 g/kW-hr |
| NOx ppm w/o Catalyst | | | | | | |
| NOx ppm with Catalyst | | | | | | |
| CO | 11 g/hp-hr | 14.75 g/kW-hr | 2.9 g/hp-hr | 3.89 g/kW-hr | 2.3 g/hp-hr | 3.08 g/kW-hr |
| CO ppm w/o Catalyst | | | | | | |
| CO ppm with Catalyst | | | | | | |
| CO2 | 435 g/hp-hr | 583 g/kW-hr | 496 g/hp-hr | 665 g/kW-hr | 583 g/hp-hr | 782 g/kW-hr |
| O2 | 0.52 % | | 0.61 % | | 0.66 % | |

Bold entries revised after 1-Mar-2010

**© 2010, Cummins Inc., All Rights Reserved**
**Cummins Confidential and Proprietary**
**Controlled copy is located on gce.cummins.com**

## Cranking System (Cold Starting Capability)

Unaided Cold Start:

| | | | | |
|---|---|---|---|---|
| Minimum cranking speed | 250 | RPM | | |
| Minimum ambient temperature for unaided cold start | 0 | deg F | -17.8 | deg C |
| Breakaway torque at minimum unaided cold start temperature: | 480 | lb-ft | 651 | N-m |
| Cold starting aids available | Block Heater | | | |
| Maximum parasitic load at 10 deg F @ | | | | |

## Noise Emissions

| | | |
|---|---|---|
| Top | 89.8 | dBa |
| Right Side | 91.2 | dBa |
| Left Side | 91.7 | dBa |
| Front | 90.3 | dBa |
| Exhaust noise emissions | 105.3 | dBa |

Estimated Free Field Sound Pressure Level at 3.28ft (1m) and Full-Load Governed Speed
(Excludes Noise from Intake, Exhaust, Cooling System and Driven Components)

**Aftercooler Heat Rejection - Heat Load on Aftercooler**
BTU/min (kW)

**Ambient Temp** deg F (deg C)

| **Altitude** ft (m) | **120 (49)** | **110 (43)** | **100 (38)** | **90 (32)** | **80 (27)** | **70 (21)** |
|---|---|---|---|---|---|---|
| **0 (0)** | (.0) | (.0) | (.0) | (.0) | (.0) | (.0) |
| **1000 (305)** | (.0) | (.0) | (.0) | (.0) | (.0) | (.0) |
| **2000 (610)** | (.0) | (.0) | (.0) | (.0) | (.0) | (.0) |
| **3000 (914)** | (.0) | (.0) | (.0) | (.0) | (.0) | (.0) |
| **4000 (1219)** | (.0) | (.0) | (.0) | (.0) | (.0) | (.0) |
| **5000 (1524)** | (.0) | (.0) | (.0) | (.0) | (.0) | (.0) |
| **6000 (1829)** | (.0) | (.0) | (.0) | (.0) | (.0) | (.0) |
| **7000 (2134)** | (.0) | (.0) | (.0) | (.0) | (.0) | (.0) |
| **8000 (2438)** | (.0) | (.0) | (.0) | (.0) | (.0) | (.0) |
| **9000 (2743)** | (.0) | (.0) | (.0) | (.0) | (.0) | (.0) |
| **10000 (3048)** | (.0) | (.0) | (.0) | (.0) | (.0) | (.0) |

**End of Report**

Bold entries revised after 1-Mar-2010

**© 2010, Cummins Inc., All Rights Reserved**
**Cummins Confidential and Proprietary**
**Controlled copy is located on gce.cummins.com**

2040 Afton Place
Farmington, NM 87401
Office: 505.327.4945 | Direct: 307.675.5077
jmartindale@emittechnologies.com

**Prepared For:**
Rob Lucero
WEATHERFORD INTERNATIONAL, LTD

**QUOTE:** QUO-08945-M6B6

## INFORMATION PROVIDED BY CUMMINS

| | |
|---|---|
| Engine: | G8.3C118 |
| Horsepower: | 118 |
| RPM: | 1800 |
| Compression Ratio: | 10.5:1 |
| Exhaust Flow Rate: | 604 CFM |
| Exhaust Temperature: | 1374 °F |
| Reference: | FR 92224 |
| Fuel: | Natural Gas |
| Annual Operating Hours: | 8760 |

**Uncontrolled Emissions**

| | g/bhp-hr |
|---|---|
| NOx: | 11.60 |
| CO: | 11.00 |
| THC: | 2.75 |
| NMHC | 0.17 |
| NMNEHC: | N/A |
| HCHO: | N/A |
| O2: | 0.52 % |

## POST CATALYST EMISSIONS

| | g/bhp-hr |
|---|---|
| NOx: | <1.00 |
| CO: | <2.00 |

## CONTROL EQUIPMENT

**Replacement Catalyst Element**

| | |
|---|---|
| Model: | **RE-1200-R** |
| Catalyst Type: | NSCR, Precious group metals |
| Substrate Type: | BRAZED |
| Manufacturer: | EMIT Technologies, Inc. |
| Element Quantity: | 2 |
| Element Size: | Round 12 x 3.5 |

The information in this quotation, and any files transmitted with it, is confidential and may be legally privileged. It is intended only for the use of individual(s) within the company named above. If you are the intended recipient, be aware that your use of any confidential or personal information may be restricted by state and federal privacy laws

2040 Afton Place
Farmington, NM 87401
Office: 505.327.4945 | Direct: 307.675.5077
jmartindale@emittechnologies.com

## WARRANTY

EMIT Technologies, Inc. warrants that the goods supplied will be free from defects in workmanship by EMIT Technologies, Inc. for a period of one (1) year from date of shipment. EMIT Technologies, Inc. will not be responsible for any defects which result from improper use, neglect, failure to properly maintain or which are attributable to defects, errors or omissions in any drawings, specifications, plans or descriptions, whether written or oral, supplied to EMIT Technologies, Inc. by Buyer.

Catalyst performance using an EMIT Air/Fuel ratio controller is dependent upon properly defined set-points, variable with engine and fuel gas composition. Air/fuel ratio controller performance is guaranteed, but not limited, to fuel gas with a HHV content of 1400 BTU/SCF.

Catalyst performance will be guaranteed for a period of 1 year from installation, or 8760 operating hours, whichever comes first. The catalyst shall be operated with an automatic air/fuel ratio controller. The performance guarantee shall not cover the effects of excessive ash masking due to operation at low load, improper engine maintenance, or inappropriate lubrication oil. The performance guarantee shall not cover the effects of continuous engine misfires (cylinder or ignition) exposing the catalyst to excessive exothermic reaction temperatures. In most cases, excluding thermal deactivation, catalyst performance is redeemable by means of proper washing (refer to EMIT Catalyst/Silencer Housing Manual for element wash information, or contact a local EMIT Sales representative).

The exhaust temperature operating range at the converter inlet is a minimum of 600°F for oxidation catalyst and 750 °F for NSCR catalyst, and a maximum of 1250°F.

If a properly functioning, high temperature shut down switch is not installed, thermal deactivation of catalyst at sustained temperatures above 1250°F is not covered. If excessive exposure to over oxygenation of NSCR catalyst occurs due to improperly functioning or non -existent Air/Fuel ratio control, then deactivation of catalyst is not warranted.

The catalyst conversion efficiencies (% reduction) will be guaranteed for engine loads of 50 to 100 percent. Standard Oxidation Catalyst conversion efficiencies (% reduction) will be guaranteed for fuel gas containing less than 1.5% mole fraction of non-methane, non-ethane hydrocarbons. Applications where fuel gas exceeds this level will require a Premium Oxidation Catalyst to maintain guaranteed VOC conversion efficiencies.

Engine lubrication oil shall contain less than 0.5 wt% Sulfated Ash with a maximum allowable specific oil consumption of 0.7 g/bhp-hr. The catalyst shall be limited to a maximum ash loading of 0.022 lb/ft3. Phosphorous and zinc additives are limited to 0.03 wt%. New or Reconstructed engines must operate for a minimum of 100 hours prior to catalyst installation, otherwise the warranty is void.

The catalyst must not be exposed to the following know poisoning agents, including: antimony, arsenic, chromium, copper, iron, lead, lithium, magnesium, mercury, nickel, phosphorous, potassium, silicon, sodium, sulfur, tin, and zinc. Total poison concentrations in the fuel gas must be limited to 0.25 ppm or less for catalyst to function properly.

Shipment - Promised shipping dates are approximate lead times from the point of manufacture and are not guaranteed. EMIT Technologies, Inc. will not be liable for any loss, damage or delay in manufacture or delivery resulting from any cause beyond its control including, but not limited to a period equal to the time lost by reason of that delay. All products will be crated as per best practice to prevent any damage during shipment. Unless otherwise specified, Buyer will pay for any special packing and shipping requirements. Acceptance of goods by common carrier constitutes delivery to Buyer. EMIT Technologies, Inc. shall not be responsible for goods damaged or lost in transit.

Terms: Credit is extended to purchaser for net 30 time period. If payment is not received in the net 30 timeframe, interest on the unpaid balance will accrue at a rate of 1.5% per month from the invoice date.

Order Cancellation Terms: Upon cancellation of an order once submittal of a Purchase Order has occurred, the customer will pay a 25% restocking fee for Catalyst Housings, Catalyst Elements, and Air/Fuel Ratio Controllers; 50% restocking fee for Cooler Top Solutions, Exhaust System Accessories, and other Custom Built Products; 100% of all associated shipping costs incurred by EMIT; 100% of all project expenses incurred by EMIT for Field Services.

The information in this quotation, and any files transmitted with it, is confidential and may be legally privileged. It is intended only for the use of individual(s) within the company named above. If you are the intended recipient, be aware that your use of any confidential or personal information may be restricted by state and federal privacy laws

DEFAULT EMISSION FACTORS FOR INTERNAL COMBUSTION ENGINES (ICE) from

http://webcache.googleusercontent.com/search?q=cache:j6l9w3lypewJ:www.mdaqmd.ca.gov/Modules/ShowDocument.aspx%3Fdocumentid%3D1211+emission+factors+for+propane+engines&cd=3&hl=en&ct=clnk&gl=us
www.mdaqmd.ca.gov

Mojave Desert Air Quality Management District

| FUEL | | | Diesel | | | | | | | Gasoline | | Propane * | | Natural Gas * | | | | | |
|---|---|---|---|---|---|---|---|---|---|---|---|---|---|---|---|---|---|---|---|
| Emission Reporting Unit (ERU) | | | 1,000 gallons | | | | | | | 1,000 gallons | | 1,000 gallons | | million cubic feet (mmcf) | | | | | |
| Heating Value (Btu/ERU) | | | 128.8 MMBtu / 1,000 gallons | | | | | | | 126.8 MMBtu / 1,000 gals | | 91.5 MMBtu / 1,000 gals | | 1,000 MMBtu / mmcf | | | | | |
| Emission Factor Units | | | pound per 1,000 gallons | | | | | | | pounds / 1,000 gals | | pounds / 1,000 gals | | pounds per million cubic feet | | | | | |
| Size / Type / Rating of ICE | | | <100 Bhp | >100 Bhp | >100 Bhp | >100 Bhp | >100 Bhp | | SC * | ALL | SC * | ALL | SC * | 4SL<650 | 4SR<650 | 4SR<650 | 4SL>650 | 2SL>650 | SC * |
| SCC Number | | | 20100102 / 20200102 / 20300101 | | | | | | | 20200301 / 20300301 | | | | 20200254 | 20200253 | 20100253 | 20200254 | 20200252 | |
| Emission Controls * | | | UNC | UNC | IRT | AFR | WI | SCR | | UNC | | UNC | | UNC | UNC | NSCR | UNC | UNC | |
| POLLUTANT | CAS # | | | | | | | | | | | | | | | | | | |
| CRITERIA | | | | | | | | | | | | | | | | | | | |
| Oxide of Nitrogen | | | | | | | | | | | | | | | | | | | |
| $NO_X$ | 42603 | | 469.00 | 604.30 | 260.36 | 405.61 | 306.95 | 54.81 | sd | 102.00 | sc | 139.00 | sc/sd | | | Vendor * | | | |
| 90-105 % Load | 42603 | | | | | | | | | | | | | 4,080.000 | 2,210.000 | Vendor * | 4,080.000 | 3,170.000 | ap |
| <90% load | 42603 | | | | | | | | | | | | | 847.000 | 2,270.000 | Vendor * | 847.000 | 1,940.000 | ap |
| Carbon Monoxide | | | | | | | | | | | | | | | | | | | |
| CO | 42101 | | 102.00 | 130.18 | 116.48 | 116.48 | 116.48 | 116.48 | sd | 3,940.00 | sc | 129.00 | sc/sd | | | Vendor * | | | |
| 90-105 % Load | 42101 | | | | | | | | | | | | | 317.000 | 3,720.000 | Vendor * | 317.000 | 386.000 | ap |
| <90% load | 42101 | | | | | | | | | | | | | 557.000 | 3,510.000 | Vendor * | 557.000 | 353.000 | ap |
| $SO_X$ | 42401 | | 7.10 | 7.10 | 7.10 | 7.10 | 7.10 | 7.10 | sd | 5.31 | sc | 0.38 | sc/sd | 0.588 | 0.588 | Vendor * | 0.588 | 0.588 | ap |
| $PM_{10}$ | 11101 | | 33.50 | 42.48 | 7.85 | 7.85 | 7.85 | 7.85 | sd | 6.50 | sc | 5.00 | sc/sd | 0.077 | 9.500 | Vendor * | 0.077 | 38.400 | ap |
| $PM_{2.5}$ | | | | | | | | | | | | | | 0.077 | 9.500 | Vendor * | 0.077 | 38.400 | ap |
| PM Condensable | | | | | | | | | | | | | | 0.099 | 9.910 | Vendor * | 0.099 | 9.910 | ap |
| $CO_2$ | 124389 | | 21,123.00 | 21,123.00 | 21,123.00 | 21,123.00 | 21,123.00 | 21,123.00 | ap | 19,500.00 | ap | | | 11,000.000 | 11,000.000 | Vendor * | 11,000.000 | 11,000.000 | ap |
| TOG | 43101 | | 37.50 | 58.92 | 12.33 | 12.33 | 12.33 | 12.33 | sd | 206.00 | sc | 63.00 | sc/sd | 1,470.000 | 358.000 | Vendor * | 1,470.000 | 1,640.000 | ap |
| VOC | | | | | | | | | | | | | | 118.000 | 29.600 | Vendor * | 118.000 | 120.000 | ap |
| TOXICS | | AB2588 | | | | | | | | | | | | | | | | | |
| 1,1,2,2 - Tetrachloroethane | 79345 | XXX | | | | | | | | | | 4.29E-02 | md/av | 4.00E-02 | 2.53E-02 | 2.53E-02 | 4.00E-02 | 6.63E-02 | ap |
| 1,1,2 - Trichloroetrhane | 79005 | XXX | | | | | | | | | | 3.29E-02 | md/av | 3.18E-02 | 1.53E-02 | 1.53E-02 | 3.18E-02 | 5.27E-02 | ap |
| 1,1 - Dichloroethane | 75343 | XXX | | | | | | | | | | 2.44E-02 | md/av | 2.36E-02 | 1.13E-02 | 1.13E-02 | 2.36E-02 | 3.91E-02 | ap |
| 1,2,3 - Trimethylbenzene | 526738 | | | | | | | | | | | 2.71E-02 | md/av | 2.30E-02 | | | 2.30E-02 | 3.54E-02 | ap |
| 1,2,4 - Trimethylbenzene | 95636 | XXX | | | | | | | | | | 4.65E-02 | md/av | 1.43E-02 | | | 1.43E-02 | 1.11E-01 | ap |
| Ethylene Dichloride | 107062 | XXX | | | | | | | | | | 2.52E-02 | md/av | 2.36E-02 | 1.13E-02 | 1.13E-02 | 2.36E-02 | 4.22E-02 | ap |
| 1,2 - Dichloropropane | 78875 | XXX | | | | | | | | | | 2.79E-02 | md/av | 2.69E-02 | 1.30E-02 | 1.30E-02 | 2.69E-02 | 4.46E-02 | ap |
| 1,3,5 - Trimethylbenzene | 108678 | | | | | | | | | | | 3.02E-02 | md/av | 3.38E-02 | | | 3.88E-02 | 1.80E-02 | ap |
| 1,3-Butadiene | 106990 | XXX | 2.17E-01 | 2.17E-01 | 2.17E-01 | 2.17E-01 | 2.17E-01 | 2.17E-01 | v | | | 3.90E-01 | md/av | 2.67E-01 | 1.04E-01 | 1.04E-01 | 3.67E-01 | 8.20E-01 | sd/ap |
| 1,3 - Dichloropropene | 542756 | XXX | | | | | | | | | | 2.73E-02 | md/av | 2.64E-02 | 1.27E-02 | 1.27E-02 | 2.64E-02 | 4.38E-02 | ap |
| 2,2,4 - Trimethylpentane | 540841 | XXX | | | | | | | | | | 4.49E-01 | md/av | 2.50E-01 | | | 2.50E-01 | 8.46E-01 | ap |
| 2 - Methylnaphthalene | 91576 | | | | | | | | | | | 2.93E-02 | md/av | 3.32E-02 | | | 3.32E-02 | 2.14E-02 | ap |
| Acenaphthene | 83329 | XXX | 2.04E-02 | 2.04E-02 | 2.04E-02 | 2.04E-02 | 2.04E-02 | 2.04E-02 | c | | | 9.36E-04 | md/av | 7.17E-04 | 1.94E-03 | 1.94E-03 | 1.51E-04 | | sd |
| Acenaphthylene | 208968 | XXX | 1.47E-02 | 1.47E-02 | 1.47E-02 | 1.47E-02 | 1.47E-02 | 1.47E-02 | c | | | 6.45E-03 | md/av | 7.59E-03 | 1.45E-02 | 1.45E-02 | 5.25E-04 | 3.17E-03 | sd/ap |
| Acetaldehyde | 75070 | XXX | 7.83E-01 | 7.83E-01 | 7.83E-01 | 7.83E-01 | 7.83E-01 | 7.83E-01 | v | | | 3.29E+00 | md/av | 3.99E+00 | 8.83E-01 | 8.83E-01 | 5.29E-01 | 7.76E+00 | sd/ap |
| Acrolein | 107028 | XXX | 3.39E-02 | 3.39E-02 | 3.39E-02 | 3.39E-02 | 3.39E-02 | 3.39E-02 | v | | | 2.50E+00 | md/av | 1.63E+00 | 5.47E-01 | 5.47E-01 | 5.90E-02 | 7.78E+00 | sd/ap |
| Ammonia (42604) | 7664417 | XXX | | | | | | 5.39E+00 | c | | | | | | | | | | |
| Anthracene | 120127 | XXX | 6.72E-03 | 6.72E-03 | 6.72E-03 | 6.72E-03 | 6.72E-03 | 6.72E-03 | c | | | 7.33E-04 | md/av | 2.56E-04 | 1.84E-03 | 1.84E-03 | 1.19E-04 | 7.18E-04 | sd/ap |
| Arsenic | 7440382 | XXX | 7.80E-03 | 7.80E-03 | 7.80E-03 | 7.80E-03 | 7.80E-03 | 7.80E-03 | sd | | | | | | | | | | |
| Benzene | 71432 | XXX | 1.86E-01 | 1.86E-01 | 1.86E-01 | 1.86E-01 | 1.86E-01 | 1.86E-01 | v | 6.17 | sd | 9.06E-01 | md/av | 1.21E+00 | 1.91E+00 | 7.39E-02 | 2.18E-01 | 2.95E-01 | sd |
| Benzaldehyde | 100527 | | 1.35E-02 | 1.35E-02 | 1.35E-02 | 1.35E-02 | 1.35E-02 | 1.35E-02 | c | | | | | | | | | | |
| Benzo(a)anthracene | 56553 | XXX | 2.30E-04 | 2.30E-04 | 8.52E-05 | 8.52E-05 | 8.52E-05 | 8.52E-05 | sd | | | 1.92E-04 | md/av | 7.78E-05 | 2.94E-04 | 2.94E-04 | 5.88E-05 | 3.36E-04 | sd/ap |
| Benzo(a)pyrene | 50328 | XXX | 1.29E-05 | 1.29E-05 | 1.76E-05 | 1.76E-05 | 1.76E-05 | 1.76E-05 | sd | | | 5.03E-05 | md/av | 7.78E-05 | 1.15E-04 | 1.15E-04 | 2.70E-06 | 5.68E-06 | sd/ap |
| Benzo(b)fluoranthenen | 205992 | XXX | 6.79E-06 | 6.79E-06 | 1.52E-04 | 1.52E-04 | 1.52E-04 | 1.52E-04 | sd | | | 1.53E-04 | md/av | 3.27E-04 | 2.37E-04 | 2.37E-04 | 4.09E-05 | 8.51E-06 | sd/ap |
| Benzo(e)pyrene | 192972 | XXX | | | | | | | | | | 2.84E-04 | md/av | 4.15E-04 | | | 4.15E-04 | 2.34E-05 | ap |
| Benzo(g,h,l)perylene | 191242 | XXX | 6.72E-03 | 6.72E-03 | 6.72E-03 | 6.72E-03 | 6.72E-03 | 6.72E-03 | c | | | 8.26E-05 | md/av | 1.03E-04 | 1.95E-04 | 1.95E-04 | 7.54E-06 | 2.48E-05 | sd/ap |
| Benzo(k)fluoranthene | 207089 | XXX | 1.06E-05 | 1.06E-05 | 1.49E-05 | 1.49E-05 | 1.49-05 | 1.49E-05 | sd | | | 1.61E-04 | md/av | 5.30E-04 | 1.03E-04 | 1.03E-04 | 7.83E-06 | 4.26E-06 | sd/ap |
| Beryllium | 7440417 | XXX | | | | | | | | | | | | | | | | | |
| Biphenyl | 92524 | XXX | | | | | | | | | | 1.43E-01 | md/av | 2.12E-01 | | | 2.12E-01 | 3.95E-03 | ap |
| Butane | 106978 | | | | | | | | | | | 1.94E+00 | md/av | 5.41E-01 | | | 5.41E-01 | 4.75E+00 | ap |
| Butyr/Isobutyaldehyde | 78842 | XXX | | | | | | | | | | 1.72E-01 | md/av | 1.01E-01 | 4.86E-02 | 4.86E-02 | 1.01E-01 | 4.37E-01 | ap |
| Cadmium | 7440439 | XXX | 1.50E-03 | 1.50E-03 | 1.50E-03 | 1.50E-03 | 1.50E-03 | 1.50E-03 | v | | | | | | | | | | |
| Carbon tetrachloride | 56235 | XXX | | | | | | | | | | 3.80E-02 | md/av | 3.67E-02 | 1.77E-02 | 1.77E-02 | 3.67E-02 | 6.07E-02 | ap |
| Chlorine | 7782505 | XXX | | | | | | | | | | | | | | | | | |
| Chlorobenzene | 108907 | XXX | 2.00E-04 | 2.00E-04 | 2.00E-04 | 2.00E-04 | 2.00E-04 | 2.00E-04 | v | | | 2.95E-02 | md/av | 3.04E-02 | 1.29E-02 | 1.29E-02 | 3.04E-02 | 4.44E-02 | ap |
| Ethyl chloride | 75003 | XXX | | | | | | | | | | 1.87E-03 | md/av | 1.87E-03 | | | 1.87E-03 | | |
| Chloroform | 67663 | XXX | | | | | | | | | | 2.95E-02 | md/av | 2.85E-02 | 1.37E-02 | 1.37E-02 | 2.85E-02 | 4.71E-02 | ap |
| Chrysene | 218019 | XXX | 6.72E-03 | 6.72E-03 | 6.72E-03 | 6.72E-03 | 6.72E-03 | 6.72E-03 | c | | | 2.73E-04 | md/av | 9.64E-05 | 3.10E-04 | 3.10E-04 | 1.43E-05 | 6.72E-04 | sd/ap |
| Copper | 7440508 | XXX | 4.10E-03 | 4.10E-03 | 4.10E-03 | 4.10E-03 | 4.10E-03 | 4.10E-03 | v | | | | | | | | | | |
| Cyclohexane | 110876 | XXX | | | | | | | | | | 3.08E-01 | md/av | | | | | 3.08E-01 | ap |
| Cyclopentane | 287923 | | | | | | | | | | | 1.83E-01 | md/av | 2.27E-01 | | | 2.27E-01 | 9.47E-02 | ap |
| Dibenz(a,h)anthracene | 53703 | XXX | 3.99E-05 | 3.99E-05 | 2.30E+00 | 2.37E-05 | 2.37E-05 | 2.37E-05 | sd | | | 8.70E-06 | md/av | 1.09E-05 | 1.25E-05 | 1.25E-05 | 2.70E-06 | | sd |



DATE: 9/29/2015

http://webcache.googleusercontent.com/search?q=cache:j6l9w3lypewJ:www.mdaqmd.ca.gov/Modules/ShowDocument.aspx%3Fdocumentid%3D1211+emission+factors+for+propane+engines&cd=3&hl=en&ct=clnk&gl=us
www.mdaqmd.ca.gov

Mojave Desert Air Quality Management District

| FUEL | | | Diesel | | | | | | | Gasoline | | Propane * | | Natural Gas * | | | | | |
|---|---|---|---|---|---|---|---|---|---|---|---|---|---|---|---|---|---|---|---|
| Emission Reporting Unit (ERU) | | | 1,000 gallons | | | | | | | 1,000 gallons | | 1,000 gallons | | million cubic feet (mmcf) | | | | | |
| Heating Value (Btu/ERU) | | | 128.8 MMBtu / 1,000 gallons | | | | | | | 126.8 MMBtu / 1,000 gals | | 91.5 MMBtu / 1,000 gals | | 1,000 MMBtu / mmcf | | | | | |
| Emission Factor Units | | | pound per 1,000 gallons | | | | | | | pounds / 1,000 gals | | pounds / 1,000 gals | | pounds per million cubic feet | | | | | |
| Size / Type / Rating of ICE | | | <100 Bhp | >100 Bhp | >100 Bhp | >100 Bhp | >100 Bhp | >100 Bhp | SC * | ALL | SC * | ALL | SC * | 4SL<650 | 4SR<650 | 4SR<650 | 4SL>650 | 2SL>650 | SC * |
| SCC Number | | | 20100102 / 20200102 / 20300101 | | | | | | | 20200301 / 20300301 | | | | 20200254 | 20200253 | 20100253 | 20200254 | 20200252 | |
| Emission Controls * | | | UNC | UNC | IRT | AFR | WI | SCR | | UNC | | UNC | | UNC | UNC | NSCR | UNC | UNC | |
| POLLUTANT | CAS # | | | | | | | | | | | | | | | | | | |
| Dioxins | 1086 / 1085 | XXX | | | | | | | | | | | | | | | | | |
| Ethane | 74840 | | | | | | | | | | | 8.78E+01 | md/av | 1.05E+02 | 7.04E+01 | 7.04E-01 | 1.05E+02 | 7.09E+01 | ap |
| Ethyl benzene | 100414 | XXX | 1.09E-02 | 1.09E-02 | 1.09E-02 | 1.09E-02 | 1.09E-02 | 1.09E-02 | v | 2.36 | sd | 4.68E-02 | md/av | 3.97E-02 | 1.16E-02 | 1.16E-02 | 7.11E-02 | 6.46E-02 | ap/sd |
| Ethylene dibromide | 106934 | XXX | | | | | | | | | | 4.58E-02 | md/av | 4.43E-02 | 2.13E-02 | 2.13E-02 | 4.43E-02 | 7.34E-02 | ap |
| Fluoranthene | 206440 | XXX | 6.72E-03 | 6.72E-03 | 6.72E-03 | 6.72E-03 | 6.72E-03 | 6.72E-03 | c | | | 4.74E-04 | md/av | 2.50E-04 | 9.95E-04 | 9.95E-04 | 2.91E-04 | 3.61E-04 | sd/ap |
| Fluorene | 86737 | XXX | 4.34E-02 | 4.34E-02 | 4.34E-02 | 4.34E-02 | 4.34E-02 | 4.34E-02 | c | | | 2.37E-03 | md/av | 4.60E-04 | 6.91E-03 | 6.91E-03 | 4.36E-04 | 1.69E-03 | sd/ap |
| Formaldehyde | 50000 | XXX | 1.73E+00 | 1.73E+00 | 1.73E+00 | 1.73E+00 | 1.73E+00 | 1.73E+00 | v | | | 1.02E+01 | md/av | 2.87E+01 | 2.35E+00 | 4.99E-02 | 4.71E+00 | 5.15E+00 | sd |
| Furans | 1080 | XXX | | | | | | | | | | | | | | | | | |
| Hexane | 110543 | XXX | 2.69E-02 | 2.69E-02 | 2.69E-02 | 2.69E-02 | 2.69E-02 | 2.69E-02 | v | 5.39 | sd | 8.88E-01 | md/av | 1.11E+00 | | | 1.11E+00 | 4.45E-01 | ap |
| Chromium | 7440473 | XXX | 3.20E-03 | 3.20E-03 | 3.20E-03 | 3.20E-03 | 3.20E-03 | 3.20E-03 | sd | | | | | | | | | | |
| Chromium hexavalent | 18540299 | XXX | 2.00E-04 | 2.00E-04 | 2.00E-04 | 2.00E-04 | 2.00E-04 | 2.00E-04 | sd | | | | | | | | | | |
| Hydrogen chloride | 7647010 | XXX | 1.86E-01 | 1.86E-01 | 1.86E-01 | 1.86E-01 | 1.86E-01 | 1.86E-01 | v | | | | | | | | | | |
| Hydrogen Sulfide | 7783064 | XXX | | | | | | | | | | | | | | | | | |
| Indeno(1,2,3-cd)pyrene | 193395 | XXX | 2.57E-05 | 2.57E-05 | 2.84E-05 | 2.84E-05 | 2.84E-05 | 2.84E-05 | sd | | | 7.65E-05 | md/av | 1.20E-04 | 1.69E-04 | 1.69E-04 | 7.17E-06 | 9.93E-06 | sd/ap |
| Isobutane | 75285 | | | | | | | | | | | 3.75E+00 | md/av | | | | | 3.75E+00 | ap |
| Lead | 7439921 | XXX | 8.30E-03 | 8.30E-03 | 8.30E-03 | 8.30E-03 | 8.30E-03 | 8.30E-03 | v | | | | | | | | | | |
| Manganese | 7439965 | XXX | 3.10E-03 | 3.10E-03 | 3.10E-03 | 3.10E-03 | 3.10E-03 | 3.10E-03 | v | | | | | | | | | | |
| Mercury | 7439976 | XXX | 2.30E-03 | 2.30E-03 | 2.30E-03 | 2.30E-03 | 2.30E-03 | 2.30E-03 | sd | | | | | | | | | | |
| Methanol | 67651 | XXX | | | | | | | | | | 2.64E+00 | md/av | 2.50E+00 | 3.06E+00 | 3.06E+00 | 2.50E+00 | 2.48E+00 | ap |
| Methylcyclohexane | 108872 | | | | | | | | | | | 9.33E-01 | md/av | 1.23E+00 | | | 1.23E+00 | 3.38E-01 | ap |
| Methylene chloride | 74953 | XXX | | | | | | | | | | 4.65E-02 | md/av | 2.00E-02 | 4.12E-02 | 4.12E-02 | 2.00E-02 | 1.05E-01 | ap |
| Naphthalene | 91203 | XXX | 1.97E-02 | 1.97E-02 | 1.97E-02 | 1.97E-02 | 1.97E-02 | 1.97E-02 | v | | | 8.00E-02 | md/av | 1.22E-01 | 7.65E-02 | 7.65E-02 | 2.51E-02 | 9.63E-02 | sd/ap |
| Nickel | 7440020 | XXX | 3.90E-03 | 3.90E-03 | 3.90E-03 | 3.90E-03 | 3.90E-03 | 3.90E-03 | v | | | | | | | | | | |
| Nonane | 111842 | | | | | | | | | | | 8.36E-02 | md/av | 1.10E-01 | | | 1.10E-01 | 3.08E-02 | ap |
| Octane | 111659 | | | | | | | | | | | 2.59E-01 | md/av | 3.51E-01 | | | 3.51E-01 | 7.44E-02 | ap |
| Pentane | 109660 | | | | | | | | | | | 2.24E+00 | md/av | 2.60E+00 | | | 2.60E+00 | 1.53E+00 | ap |
| Perylene | 198550 | | | | | | | | | | | 4.96E-06 | md/av | | | | | 4.96E-06 | ap |
| Phenanthrene | 85018 | XXX | 8.68E-02 | 8.68E-02 | 8.68E-02 | 8.68E-02 | 8.68E-02 | 8.68E-02 | c | | | 3.34E-03 | md/av | 8.93E-04 | 7.07E-03 | 7.07E-03 | 1.85E-03 | 3.53E-03 | sd/ap |
| Phenol | 108952 | XXX | | | | | | | | | | 3.00E-02 | md/av | 2.40E-02 | | | 2.40E-02 | 4.21E-02 | ap |
| PAH * | 1150 | XXX | 5.59E-02 | 5.59E-02 | 5.59E-02 | 5.59E-02 | 5.59E-02 | 5.59E-02 | v | | | 8.22E-02 | md/av | 2.69E-02 | 1.41E-01 | 1.41E-01 | 2.69E-02 | 1.34E-01 | ap |
| Propane | 74986 | | | | | | | | | | | 3.75E+01 | md/av | 4.19E+01 | | | 4.19E+01 | 2.87E+01 | ap |
| Propylene | 115071 | XXX | 4.67E-01 | 4.67E-01 | 4.67E-01 | 4.67E-01 | 4.67E-01 | 4.67E-01 | v | | | 1.34E+01 | md/av | 1.87E+01 | 1.60E+01 | 1.60E+01 | 5.38E+00 | | sd |
| Pyrene | 129000 | XXX | 1.47E-02 | 1.47E-02 | 1.47E-02 | 1.47E-02 | 1.47E-02 | 1.47E-02 | c | | | 6.71E-04 | md/av | 1.23E-04 | 1.79E-03 | 1.79E-03 | 1.87E-04 | 5.84E-04 | sd/ap |
| Selenium | 7782492 | XXX | 9.80E-03 | 9.80E-03 | 9.80E-03 | 9.80E-03 | 9.80E-03 | 9.80E-03 | sd | 10.5 | sd | | | | | | | | |
| Styrene | 100425 | XXX | | | | | | | | | | 2.85E-02 | md/av | 2.36E-02 | 1.19E-02 | 1.19E-02 | 2.36E-02 | 5.48E-02 | ap |
| Tetrachloroethane (Perc) | 127184 | XXX | | | | | | | | | | 2.48E-03 | md/av | 2.48E-03 | | | 2.48E-03 | | |
| Toluene | 108883 | XXX | 1.05E-01 | 1.05E-01 | 1.05E-01 | 1.05E-01 | 1.05E-01 | 1.05E-01 | v | | | 4.76E-01 | md/av | 4.12E-01 | 1.07E+00 | 1.07E+00 | 2.39E-01 | 1.89E-01 | sd |
| Diesel Particulate | 9901 | XXX | 3.35E+01 | 4.25E+01 | 7.85E+00 | 7.85E+00 | 7.85E+00 | 7.85E+00 | sd | | | | | | | | | | |
| Vinyl chloride | 75014 | XXX | | | | | | | | | | 1.54E-02 | md/av | 1.49E-02 | 7.18E-03 | 7.18E-03 | 1.49E-02 | 2.47E-02 | ap |
| Xylenes | 1210 | XXX | 4.24E-02 | 4.24E-02 | 4.24E-02 | 4.24E-02 | 4.24E-02 | 4.24E-02 | v | | | 3.26E-01 | md/av | 8.63E-02 | 4.41E-01 | 4.41E-01 | 6.46E-01 | 1.29E-01 | sd |
| Zinc | 7440666 | XXX | 2.24E-02 | 2.24E-02 | 2.24E-02 | 2.24E-02 | 2.24E-02 | 2.24E-02 | v | | | | | | | | | | |

* FOOT NOTES

| SOURCE OF DATA | |
|---|---|
| c = | CARB |
| sc = | SCAQMD |
| sd = | SDCAPCD |
| v = | VCAPCD |
| ap = | USEPA - AP-42 |
| md / av = | MDAQMD & AVAPCD |

| EMISSION CONTROLS | |
|---|---|
| UNC | Uncontrolled |
| ITR | Ignition timing retard |
| AFR | Air to fuel ratio |
| WI | Water injection |
| SCR | Selective catalytic reduction |
| NSCR | Non-elective catalytic reduction |

| ABBREVIATIONS | |
|---|---|
| PAH = | Polycyclic aromatic hydrocarbons |
| SC = | Source of emission factors |
| TSP = | Total suspended particulates |
| Vendor = | Vendor to supply data |

| NATURAL GAS | |
|---|---|
| 4SL <650 | 4 Stroke lean burn <650 Bhp |
| 4SR <650 | 4 Stroke rich burn <650 Bhp |
| 4SL >650 | 4 Stroke lean burn >650 Bhp |
| 2SL >650 | 2 Stroke lean burn >650 Bhp |

Propane toxic emission factors were calculated from the natural gas toxic emission factors using the following formula:

$TEF_P = TEF_{NG} * HV_P / HV_{NG}$

$TEF_P$ = Propane toxic emission factor

$TEF_{NG}$ = Average of natural gas toxic emission factors

$HV_P$ = Heating value for propane

$HV_{NG}$ = Heating value for natural gas



DATE: 9/29/2015

**Table 1 to Subpart JJJJ of Part 60—$NO_x$, CO, and VOC Emission Standards for Stationary Non-Emergency SI Engines ≥100 HP (Except Gasoline and Rich Burn LPG), Stationary SI Landfill/Digester Gas Engines, and Stationary Emergency Engines >25 HP**

| Engine type and fuel | Maximum engine power | Manufacture date | Emission standards[a] | | | | | |
|---|---|---|---|---|---|---|---|---|
| | | | g/HP-hr | | | ppmvd at 15% $O_2$ | | |
| | | | $NO_x$ | CO | VOC[d] | $NO_x$ | CO | VOC[d] |
| Non-Emergency SI Natural Gas[b] and Non-Emergency SI Lean Burn LPG[b] | 100≤HP<500 | 7/1/2008 | 2.0 | 4.0 | 1.0 | 160 | 540 | 86 |
| | | 1/1/2011 | 1.0 | 2.0 | 0.7 | 82 | 270 | 60 |
| Non-Emergency SI Lean Burn Natural Gas and LPG | 500≤HP<1,350 | 1/1/2008 | 2.0 | 4.0 | 1.0 | 160 | 540 | 86 |
| | | 7/1/2010 | 1.0 | 2.0 | 0.7 | 82 | 270 | 60 |
| Non-Emergency SI Natural Gas and Non-Emergency SI Lean Burn LPG (except lean burn 500≤HP<1,350) | HP≥500 | 7/1/2007 | 2.0 | 4.0 | 1.0 | 160 | 540 | 86 |
| | HP≥500 | 7/1/2010 | 1.0 | 2.0 | 0.7 | 82 | 270 | 60 |
| Landfill/Digester Gas (except lean burn 500≤HP<1,350) | HP<500 | 7/1/2008 | 3.0 | 5.0 | 1.0 | 220 | 610 | 80 |
| | | 1/1/2011 | 2.0 | 5.0 | 1.0 | 150 | 610 | 80 |
| | HP≥500 | 7/1/2007 | 3.0 | 5.0 | 1.0 | 220 | 610 | 80 |
| | | 7/1/2010 | 2.0 | 5.0 | 1.0 | 150 | 610 | 80 |
| Landfill/Digester Gas Lean Burn | 500≤HP<1,350 | 1/1/2008 | 3.0 | 5.0 | 1.0 | 220 | 610 | 80 |
| | | 7/1/2010 | 2.0 | 5.0 | 1.0 | 150 | 610 | 80 |
| Emergency | 25<HP<130 | 1/1/2009 | [c]10 | 387 | N/A | N/A | N/A | N/A |
| | HP≥130 | | 2.0 | 4.0 | 1.0 | 160 | 540 | 86 |

```
*****************************************************************************************
*     Project Setup Information                                                         *
*****************************************************************************************
Project File               : Z:\San Juan\1 - Production\1 - Chaco\305_W Escavada UT 305-306\3 - NOI\NOI-R0 Application -
Flowsheet Selection        : Oil Tank with Separator
Calculation Method         : AP42
Control Efficiency         : 95.00%
Known Separator Stream     : Low Pressure Oil
Entering Air Composition   : No
Component Group            : C10+

Well Name                  : W. Escavada UT #305/306
Well ID                    : Tow 750-bbl Vapor Recovery Tanks (Modeled for one tank)
Date                       : 2017.11.14


*****************************************************************************************
*     Data Input                                                                        *
*****************************************************************************************

Separator Pressure (psia)          : 200.00
Separator Temperature (F)          : 150.0
C10+ SG                            : 0.86
C10+ MW(lb/lbmol)                  : 269.61

-- Low Pressure Oil ----------------------------------------------------------------------
No.   Component            Mole%    Wt%
1     H2S                    0.0000   0.0000
2     O2                     0.0000   0.0000
3     CO2                    0.0000   0.0000
4     N2                     0.0000   0.0000
5     C1                     1.0460   0.0956
6     C2                     1.1780   0.2018
7     C3                     4.4730   1.1238
8     i-C4                   1.3980   0.4629
9     n-C4                   5.5870   1.8500
10    i-C5                   3.1890   1.3109
11    n-C5                   3.9560   1.6262
12    C6                     2.3660   1.1614
13    C7                     8.9060   5.0842
14    C8                     9.1860   5.9783
15    C9                     5.4180   3.9597
16    C10+                  48.5990  74.6509
17    Benzene                0.2830   0.1259
18    Toluene                0.8280   0.4346
19    E-Benzene              0.2660   0.1609
20    Xylenes                1.1720   0.7089
21    n-C6                   2.0940   1.0281
22    224Trimethylp          0.0550   0.0358

-- Sales Oil -----------------------------------------------------------------------------
Production Rate (bbl/day)      : 1900.00
Days of Annual Operation       : 365
API Gravity                    : 41.45
Reid Vapor Pressure (psia)     : 5.72
Bulk Temperature               : 71.0

-- Tank and Shell Data -------------------------------------------------------------------
Diameter (ft)                  : 13.50
Shell Height (ft)              : 30.00
Cone Roof Slope                : 0.06
Average Liquid Height (ft)     : 25.00
Vent Pressure Range (psia)     : 0.06
Solar Absorbance               : 0.68

-- Meteorological Data -------------------------------------------------------------------
```

City : Grand Junction, CO
Min Ambient Temperature (F) : 39.6
Max Ambient Temperature (F) : 65.7
Total Solar Insolation (F) : 1659.00
Ambient Pressure (psia) : 11.70
Ambient Temperature (F) : 70.0

**********
* Calculation Results *
**********

-- Emission Summary --

| | Uncontrolled ton | Controlled ton |
|---|---|---|
| Total HAPs | 11.8880 | 0.5944 |
| Total HC | 944.1110 | 47.2056 |
| VOCs, C2+ | 855.4320 | 42.7716 |
| VOCs, C3+ | 728.6160 | 36.4308 |
| CO2 | 0.0000 | |
| CH4 | 88.6790 | |

Uncontrolled Recovery Information:
Vapor(mscfd): 48.9700
HC Vapor(mscfd): 48.9700
CO2(mscfd): 0.0000
CH4(mscfd): 11.4800
GOR(SCF/STB): 25.7737

-- Emission Composition --

| | NoComponent | Uncontrolled ton | Controlled ton |
|---|---|---|---|
| 1 | H2S | 0.0000 | 0.0000 |
| 2 | O2 | 0.0000 | 0.0000 |
| 3 | CO2 | 0.0000 | 0.0000 |
| 4 | N2 | 0.0000 | 0.0000 |
| 5 | C1 | 88.6790 | 4.4339 |
| 6 | C2 | 126.8170 | 6.3408 |
| 7 | C3 | 337.7270 | 16.8864 |
| 8 | i-C4 | 66.8700 | 3.3435 |
| 9 | n-C4 | 188.2710 | 9.4136 |
| 10 | i-C5 | 54.1980 | 2.7099 |
| 11 | n-C5 | 50.0590 | 2.5029 |
| 12 | C6 | 10.6220 | 0.5311 |
| 13 | Benzene | 0.9390 | 0.0470 |
| 14 | Toluene | 0.8890 | 0.0444 |
| 15 | E-Benzene | 0.1070 | 0.0054 |
| 16 | Xylenes | 0.4010 | 0.0201 |
| 17 | n-C6 | 9.4360 | 0.4718 |
| 18 | 224Trimethylp | 0.1160 | 0.0058 |
| 19 | Pseudo Comp1 | 8.9350 | 0.4467 |
| 20 | Pseudo Comp2 | 0.0450 | 0.0022 |
| 21 | Pseudo Comp3 | 0.0000 | 0.0000 |
| 22 | Pseudo Comp4 | 0.0000 | 0.0000 |
| 23 | Pseudo Comp5 | 0.0000 | 0.0000 |
| 24 | Total | 944.1110 | 47.2056 |

-- Stream Data --

| | NoComponent | MW lb/lbmol | LP Oil mole % | Flash Oil mole % | Sales Oil mole % | Flash Gas mole % | W&S Gas mole % | Total Emission mole % |
|---|---|---|---|---|---|---|---|---|
| 1 | H2S | 34.80 | 0.0000 | 0.0000 | 0.0000 | 0.0000 | 0.0000 | 0.0000 |
| 2 | O2 | 32.00 | 0.0000 | 0.0000 | 0.0000 | 0.0000 | 0.0000 | 0.0000 |
| 3 | CO2 | 44.01 | 0.0000 | 0.0000 | 0.0000 | 0.0000 | 0.0000 | 0.0000 |
| 4 | N2 | 28.01 | 0.0000 | 0.0000 | 0.0000 | 0.0000 | 0.0000 | 0.0000 |
| 5 | C1 | 16.04 | 1.0460 | 0.0994 | 0.0648 | 23.7043 | 13.6592 | 23.4459 |
| 6 | C2 | 30.07 | 1.1780 | 0.4805 | 0.4402 | 17.8744 | 18.2923 | 17.8852 |
| 7 | C3 | 44.10 | 4.4730 | 3.3080 | 3.2337 | 32.3585 | 36.9732 | 32.4772 |

| | | | | | | | |
|---|---|---|---|---|---|---|---|
| 8 | i-C4 | 58.12 | 1.3980 | 1.2535 | 1.2437 | 4.8572 | 5.7168 | 4.8793 |
| 9 | n-C4 | 58.12 | 5.5870 | 5.2492 | 5.2254 | 13.6717 | 16.2318 | 13.7375 |
| 10 | i-C5 | 72.15 | 3.1890 | 3.1898 | 3.1887 | 3.1691 | 3.8145 | 3.1857 |
| 11 | n-C5 | 72.15 | 3.9560 | 3.9990 | 4.0003 | 2.9266 | 3.5375 | 2.9423 |
| 12 | C6 | 84.00 | 2.3660 | 2.4426 | 2.4467 | 0.5332 | 0.6523 | 0.5363 |
| 13 | Benzene | 78.11 | 0.2830 | 0.2927 | 0.2932 | 0.0507 | 0.0620 | 0.0510 |
| 14 | Toluene | 92.14 | 0.8280 | 0.8609 | 0.8627 | 0.0407 | 0.0504 | 0.0409 |
| 15 | E-Benzene | 106.17 | 0.2660 | 0.2769 | 0.2776 | 0.0042 | 0.0053 | 0.0043 |
| 16 | Xylenes | 106.17 | 1.1720 | 1.2203 | 1.2230 | 0.0159 | 0.0199 | 0.0160 |
| 17 | n-C6 | 86.18 | 2.0940 | 2.1622 | 2.1658 | 0.4617 | 0.5651 | 0.4643 |
| 18 | 224Trimethylp | 114.23 | 0.0550 | 0.0571 | 0.0572 | 0.0043 | 0.0053 | 0.0043 |
| 19 | Pseudo Comp1 | 115.26 | 32.1906 | 33.5218 | 33.5967 | 0.3265 | 0.4130 | 0.3287 |
| 20 | Pseudo Comp2 | 187.81 | 15.5153 | 16.1634 | 16.2000 | 0.0010 | 0.0013 | 0.0010 |
| 21 | Pseudo Comp3 | 266.50 | 10.8918 | 11.3468 | 11.3725 | 0.0000 | 0.0000 | 0.0000 |
| 22 | Pseudo Comp4 | 369.46 | 8.4830 | 8.8374 | 8.8574 | 0.0000 | 0.0000 | 0.0000 |
| 23 | Pseudo Comp5 | 587.50 | 5.0284 | 5.2385 | 5.2503 | 0.0000 | 0.0000 | 0.0000 |

| | LP Oil | Flash Oil | Sales Oil | Flash Gas | W&S Gas | Total Emission |
|---|---|---|---|---|---|---|
| MW (lb/lbmol): | 174.23 | 179.84 | 180.00 | 39.94 | 43.70 | 40.04 |
| Stream Mole Ratio: | 1.0000 | 0.9599 | 0.9588 | 0.0401 | 0.0011 | 0.0412 |
| Stream Weight Ratio: | 174.23 | 172.62 | 172.59 | 1.60 | 0.05 | 1.65 |
| Total Emission (ton): | | | | 917.609 | 26.503 | 944.111 |
| Heating Value (BTU/scf): | | | | 2289.28 | 2489.69 | 2294.43 |
| Gas Gravity (Gas/Air): | | | | 1.38 | 1.51 | 1.38 |
| Bubble Pt. @100F (psia): | 53.70 | 16.85 | 15.37 | | | |
| RVP @100F (psia): | 125.27 | 73.15 | 70.30 | | | |
| Spec. Gravity @100F: | 0.82 | 0.83 | 0.83 | | | |

# TANKS 4.0.9d
## Emissions Report - Summary Format
## Tank Indentification and Physical Characteristics

**Identification**

| | |
|---|---|
| User Identification: | 500 bbl Post-Flash Oil Tanks |
| City: | Grand Junction |
| State: | Colorado |
| Company: | WPX Energy Production, LLC |
| Type of Tank: | Vertical Fixed Roof Tank |
| Description: | Modeled for one tank |

**Tank Dimensions**

| | | |
|---|---|---|
| Shell Height (ft): | | 20.00 |
| Diameter (ft): | | 13.30 |
| Liquid Height (ft) : | | 20.00 |
| Avg. Liquid Height (ft): | | 10.00 |
| Volume (gallons): | | 20,785.30 |
| Turnovers: | | 186.84 |
| Net Throughput(gal/yr): | | 3,883,600.00 |
| Is Tank Heated (y/n): | Y | |

**Paint Characteristics**

| | |
|---|---|
| Shell Color/Shade: | Gray/Medium |
| Shell Condition | Good |
| Roof Color/Shade: | Gray/Medium |
| Roof Condition: | Good |

**Roof Characteristics**

| | | |
|---|---|---|
| Type: | Cone | |
| Height (ft) | | 0.10 |
| Slope (ft/ft) (Cone Roof) | | 0.06 |

**Breather Vent Settings**

| | |
|---|---|
| Vacuum Settings (psig): | 0.00 |
| Pressure Settings (psig) | 0.00 |

Meterological Data used in Emissions Calculations: Grand Junction, Colorado (Avg Atmospheric Pressure = 12.37 psia)

# TANKS 4.0.9d
## Emissions Report - Summary Format
## Liquid Contents of Storage Tank

**500 bbl Post-Flash Oil Tanks - Vertical Fixed Roof Tank**
**Grand Junction, Colorado**

| Mixture/Component | Month | Daily Liquid Surf. Temperature (deg F) Avg. | Min. | Max. | Liquid Bulk Temp (deg F) | Vapor Pressure (psia) Avg. | Min. | Max. | Vapor Mol. Weight. | Liquid Mass Fract. | Vapor Mass Fract. | Mol. Weight | Basis for Vapor Pressure Calculations |
|---|---|---|---|---|---|---|---|---|---|---|---|---|---|
| Crude oil (RVP 5) | All | 78.14 | 66.01 | 90.26 | 71.01 | 4.0601 | 3.2340 | 5.0465 | 50.0000 | | | 207.00 | Option 4: RVP=5 |

# TANKS 4.0.9d
## Emissions Report - Summary Format
## Individual Tank Emission Totals

### Emissions Report for: Annual

**500 bbl Post-Flash Oil Tanks - Vertical Fixed Roof Tank**
**Grand Junction, Colorado**

| | Losses(lbs) | | |
|---|---|---|---|
| Components | Working Loss | Breathing Loss | Total Emissions |
| Crude oil (RVP 5) | 4,606.90 | 1,491.39 | 6,098.29 |

# TANKS 4.0.9d
## Emissions Report - Summary Format
## Tank Indentification and Physical Characteristics

**Identification**

| | |
|---|---|
| User Identification: | 500 bbl Post-Flash Produced Water Tanks |
| City: | Grand Junction |
| State: | Colorado |
| Company: | WPX Energy Production, LLC |
| Type of Tank: | Vertical Fixed Roof Tank |
| Description: | Modeled for one tank |

**Tank Dimensions**

| | | |
|---|---|---|
| Shell Height (ft): | | 20.00 |
| Diameter (ft): | | 13.30 |
| Liquid Height (ft) : | | 20.00 |
| Avg. Liquid Height (ft): | | 10.00 |
| Volume (gallons): | | 20,785.30 |
| Turnovers: | | 737.54 |
| Net Throughput(gal/yr): | | 15,330,000.00 |
| Is Tank Heated (y/n): | Y | |

**Paint Characteristics**

| | |
|---|---|
| Shell Color/Shade: | Gray/Medium |
| Shell Condition | Good |
| Roof Color/Shade: | Gray/Medium |
| Roof Condition: | Good |

**Roof Characteristics**

| | | |
|---|---|---|
| Type: | Cone | |
| Height (ft) | | 0.00 |
| Slope (ft/ft) (Cone Roof) | | 0.06 |

**Breather Vent Settings**

| | |
|---|---|
| Vacuum Settings (psig): | 0.00 |
| Pressure Settings (psig) | 0.00 |

Meterological Data used in Emissions Calculations: Grand Junction, Colorado (Avg Atmospheric Pressure = 12.37 psia)

# TANKS 4.0.9d
## Emissions Report - Summary Format
## Liquid Contents of Storage Tank

**500 bbl Post-Flash Produced Water Tanks - Vertical Fixed Roof Tank**
**Grand Junction, Colorado**

| Mixture/Component | Month | Daily Liquid Surf. Temperature (deg F) Avg. | Min. | Max. | Liquid Bulk Temp (deg F) | Vapor Pressure (psia) Avg. | Min. | Max. | Vapor Mol. Weight. | Liquid Mass Fract. | Vapor Mass Fract. | Mol. Weight | Basis for Vapor Pressure Calculations |
|---|---|---|---|---|---|---|---|---|---|---|---|---|---|
| Produced Water | All | 78.14 | 66.01 | 90.26 | 71.01 | 0.4933 | 0.3297 | 0.7240 | 19.2205 | | | 18.88 | |
| Crude oil (RVP 5) | | | | | | 4.0601 | 3.2340 | 5.0465 | 50.0000 | 0.0500 | 0.0977 | 207.00 | Option 4: RVP=5 |
| Water | | | | | | 0.4770 | 0.3164 | 0.7042 | 18.0200 | 0.9500 | 0.9023 | 18.02 | Option 2: A=8.10765, B=1750.286, C=235 |

# TANKS 4.0.9d
## Emissions Report - Summary Format
## Individual Tank Emission Totals

### Emissions Report for: Annual

**500 bbl Post-Flash Produced Water Tanks - Vertical Fixed Roof Tank**
**Grand Junction, Colorado**

| | Losses(lbs) | | |
|---|---|---|---|
| Components | Working Loss | Breathing Loss | Total Emissions |
| Produced Water | 717.56 | 52.28 | 769.83 |
| Water | 647.49 | 47.17 | 694.66 |
| Crude oil (RVP 5) | 70.07 | 5.10 | 75.18 |

# Service and Maintenance Manual

## 10 HP 7D/8D VRUE Skid Auto Bypass Gas Compressor

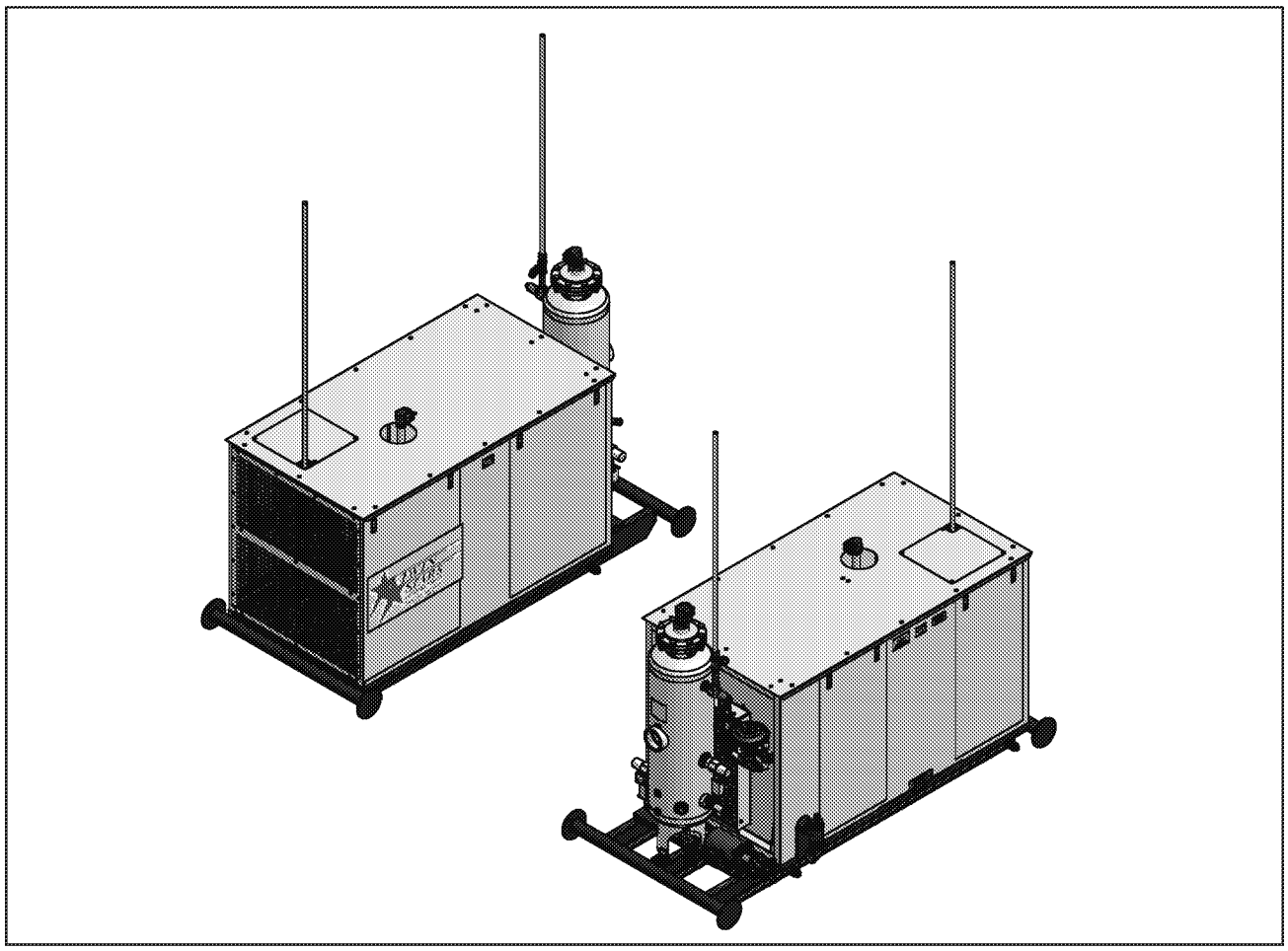

This manual must be read carefully before using your Twin Stars, Ltd. Gas Compressor. Store in a safe and convenient location for future reference.

For technical support:

Phone: (505) 632-9202 (Outside USA)
Fax: (505) 632-2723 (USA)
Website: http://www.twinstars.com

309696
2/4/2013

# Specifications

## 4.1 Specification Sheet 7D

| | | | | | | |
|---|---|---|---|---|---|---|
| **Gas Delivery @ 130 PSI with SG 1.20 & 0 PSI Inlet Pressure** | MSCFD | 17.5 | 18 | 20 | 21 | 22 |
| **Motor Speed** | RPM | 2900 | 3000 | 3200 | 3400 | 3600 |
| **Variable Frequency Drive (VFD) Electric Motor** | Rating | 10 HP | | | | |
| | Volt | 460 | | | | |
| | Phase | 3 | | | | |
| | Frequency | 60 Hz maximum | | | | |
| | Frame | TEFC | | | | |
| | Electrical Classification | Class 1, Division 2, Group D | | | | |
| **Compressor Gasend** | SCA7D | | | | | |
| **Compressor Oil Capacity** | 10 1/2 Gallons | | | | | |
| **Machine Weight** | 2467 lbs (Wet) | | | | | |
| **Overall Dimensions** | 104 3/4" L x 71 3/4" H x 51 1/4" W | | | | | |
| **Duty Cycle** | Continuous Duty | | | | | |
| **Machine Operating Angle** | 15° maximum | | | | | |
| **Ambient Conditions** | -40°F to 125°F | | | | | |

**NOTICE** Running the electric motor less then 2900 rpm will produce insufficient oil flow for the compressor.

***SPECIFICATIONS SUBJECT TO CHANGE WITHOUT PRIOR NOTICE***

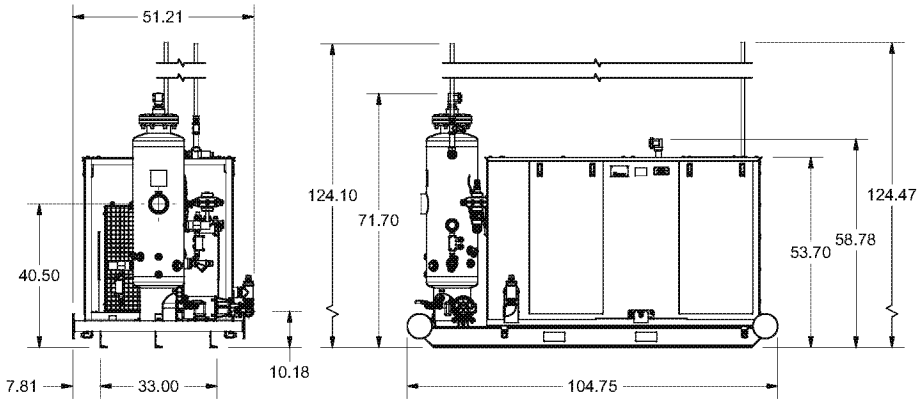




ED_004016Q_00001316-00138

## 5.14 Low Suction Bypass

The unit is equipped with a low suction bypass that allows a controlled amount of gas from the higher pressure discharge side to recirculate to the inlet scrubber vessel, this is to prevent a vacuum from being pulled on the tank(s). The bypass consists of a normally closed pneumatic motor valve and two normally open solenoid valves. One solenoid valve allows gas to vent from the pneumatic valve into the suction scrubber if the pressure in the tank(s) rises above the **"HiBypassSP"**, causing the motor valve to close. The other solenoid valve allows regulated gas pressure (40 psig) to open the motor valve if the pressure in the tank(s) falls below the **"LoBypassSP"**.



ED_004016Q_00001316-00139

# EQUIPMENT SPECIFICATIONS

## WILLIAMS PRODUCTION

### Quotation No. PES-G253, Addendum No. 2

**286 Bbl. Heated Storage Assembly**

286 Bbl. Welded Tank with Flat Bottom, 16'-0" Dia. x 8' High, Designed and Constructed in accordance with API 12F Specifications, 1/4" Bottom - 3/16" Shell – 1/4" Deck, with: 24" x 36" Extended Type Cleanout with 1-Piece Cover, Bolts, Nuts and Non-Asbestos Gasket; Combination Thief Valve and Pressure-Vacuum Valve (Round Type); 7 – 4" Threaded API Connections; 2 – Lifting Lugs; 100% Exterior painted one coat standard shop primer. Exterior sides and deck painted one coat of industrial enamel (color TBD by Customer).

PESCO Firebox Assembly, installed in above tank, to consist of the following:

1 - Firebox, 6 5/8" O.D., U-Tube type, 21'-0" submerged length, 36.0 Sq. Ft. heat transfer area, 12,000 Btu/Hr/Sq.Ft. flux rate, 125,000 Btu/Hr. nominal capacity
1 - Runner and hold-down assembly installed in tank
1 - Lighting connection with cover installed on firebox
1 - Smokestack, 6" O.D., with bird screen
1 - Flame arrestor, horizontal, coned type, 14" diameter flame cell, to include: 1" burner, pilot light and 8" access manway with cover
1 - Supply gas scrubber, capped ends, 4 ½" O.D. x 2'-0" High, 75# W.P., to include high level shut-down, drain valve and carbon steel relief valve (customer to provide supply gas)
1 - Thermostat, Kimray T-12, with carbon steel thermowell
1 - Thermometer, 20 – 240 Deg. F. range, with carbon steel thermowell
1 - Instrument gas regulator, Fisher Type 67CR
1 - Burner fuel gas regulator, Fisher Type 67CR
1 - Burner fuel gas control valve, Fisher Type 167A
1 - Burner fuel gas pressure gauge, 0-30 psig range, stainless steel internals
1 - Burner fuel gas shut-off valve, carbon steel ball type
1 - Pilot light fuel gas regulator, Fisher Type 67CR
1 - Pilot light fuel gas pressure gauge, 0-30 psig range, stainless steel internals
1 - Pilot light fuel gas shut-off valve, carbon steel ball type
1 - Set piping and tubing; tubing and tube fittings to be 3/8" stainless steel

**286 Bbl. Internal Coating Option**

100% Interior to be sandblasted to SSPC-SP10, near white metal and coated with two coats of Sherwin Williams Dura-Plate 235 @ 4-8 mils DFT each.

## 500 Bbl. Heated Storage Assembly

500 Bbl. Welded Tank with Flat Bottom, 13'-4" Dia. x 20' High, Designed and Constructed in accordance with API 12F Specifications, 1/4" Bottom - 3/16" Shell – 3/16" Deck, with: 24" x 36" Extended Type Cleanout with 1-Piece Cover, Bolts, Nuts and Non-Asbestos Gasket; Combination Thief Valve and Pressure-Vacuum Valve (Round Type); 7 – 4" Threaded API Connections; 2 – Lifting Lugs; 100% Exterior painted one coat standard shop primer. Exterior sides and deck painted one coat of industrial enamel (color TBD by Customer).
1 - Stairway for 20' High Tank and Landing, Assembled, Painted same as Tank Exterior

PESCO Firebox Assembly, installed in above tank, to consist of the following:

- 1 - Firebox, 6 5/8" O.D., U-Tube type, 21'-0" submerged length, 36.0 Sq. Ft. heat transfer area, 12,000 Btu/Hr/Sq.Ft. flux rate, 125,000 Btu/Hr. nominal capacity
- 1 - Runner and hold-down assembly installed in tank
- 1 - Lighting connection with cover installed on firebox
- 1 - Smokestack, 6" O.D., with bird screen
- 1 - Flame arrestor, horizontal, coned type, 14" diameter flame cell, to include: 1" burner, pilot light and 8" access manway with cover
- 1 - Supply gas scrubber, capped ends, 4 ½" O.D. x 2'-0" High, 75# W.P., to include high level shut-down, drain valve and carbon steel relief valve (customer to provide supply gas)
- 1 - Thermostat, Kimray T-12, with carbon steel thermowell
- 1 - Thermometer, 20 – 240 Deg. F. range, with carbon steel thermowell
- 1 - Instrument gas regulator, Fisher Type 67CR
- 1 - Burner fuel gas regulator, Fisher Type 67CR
- 1 - Burner fuel gas control valve, Fisher Type 167A
- 1 - Burner fuel gas pressure gauge, 0-30 psig range, stainless steel internals
- 1 - Burner fuel gas shut-off valve, carbon steel ball type
- 1 - Pilot light fuel gas regulator, Fisher Type 67CR
- 1 - Pilot light fuel gas pressure gauge, 0-30 psig range, stainless steel internals
- 1 - Pilot light fuel gas shut-off valve, carbon steel ball type
- 1 - Set piping and tubing; tubing and tube fittings to be 3/8" stainless steel

## 500 Bbl. Internal Coating Option

100% Interior to be sandblasted to SSPC-SP10, near white metal and coated with two coats of Sherwin Williams Dura-Plate 235 @ 4-8 mils DFT each.

# VENTURI BURNERS

THIS VENTURI-TYPE BURNER IS THE MOST ENERGY-EFFICIENT TYPE OF BURNER WE HAVE TESTED. IT IS DESIGNED FOR USE WITH THROTTLE-ACTION OR SNAP-ACTION THERMOSTATS. THE BURNER EFFICIENTLY FIRES THROUGH A RANGE OF PRESSURES ~ FROM 1 TO 18 PSIG ~ WITH NO ADDITIONAL ADJUSTMENTS. IT IS AVAILABLE IN BOTH 1-1/4" 500 MBTU (1/2 MILLION) AND 2" 1.250 (1 MILLION AND A QUARTER) MMBTU.

SEVERAL OPERATING PROBLEMS ARE SOLVED BY USE OF A PROPERLY DESIGNED VENTURI BURNER. FIRST, A VENTURI BURNER ENSURES THAT AT ANY BURNER OPERATING PRESSURE, THE PROPER AMOUNT OF PRIMARY AIR FOR EFFICIENT COMBUSTION IS DRAWN INTO THE VENTURI AND MIXED WITH THE FUEL GAS. ONCE A VENTURI BURNER HAS BEEN SET FOR A PARTICULAR ALTITUDE OR LOCATION, NO FURTHER ADJUSTMENTS ARE REQUIRED. SECOND, A VENTURI BURNER ALLOWS FOR OTHER THROTTLING DEVICES, SUCH AS AN AUTOMATIC SECONDARY AIR CONTROLLER, TO BE USED IN CONJUNCTION WITH THE BURNER.

THE BURNERS ARE USED ON A COMPLETE RANGE OF OIL AND GAS PROCESSING AND PRODUCTION EQUIPMENT. ON LARGER FIRETUBES WHERE A SINGLE BURNER IS NOT ADEQUATE TO SATISFY THE HEAT REQUIREMENTS, MULTIPLE BURNERS ARE USED WITH VERY SATISFACTORY RESULTS.

THE BURNER HAS BEEN USED ON OIL AND GAS PROCESSING AND PRODUCTION EQUIPMENT. AS MANY CUSTOMERS HAVE BECOME MORE CONCERNED ABOUT FUEL GAS CONSUMPTION, THEY HAVE BEGUN SPECIFYING A VENTURI-TYPE BURNER AS THEIR FIRST CHOICE TO BE USED ON THEIR PROCESSING AND PRODUCTION EQUIPMENT. VENTURI-TYPE BURNERS ARE APPROXIMATELY 6% MORE EFFICIENT THAN MIXING CHAMBER BURNERS.

THE BURNER CAN BE INSTALLED ON ANY TYPE OF FIRED, OILFIELD PROCESSING AND PRODUCTION EQUIPMENT PRESENTLY IN THE FIELD WITH LITTLE OR NO MODIFICATIONS REQUIRED.

Venturi Burner
1933-10

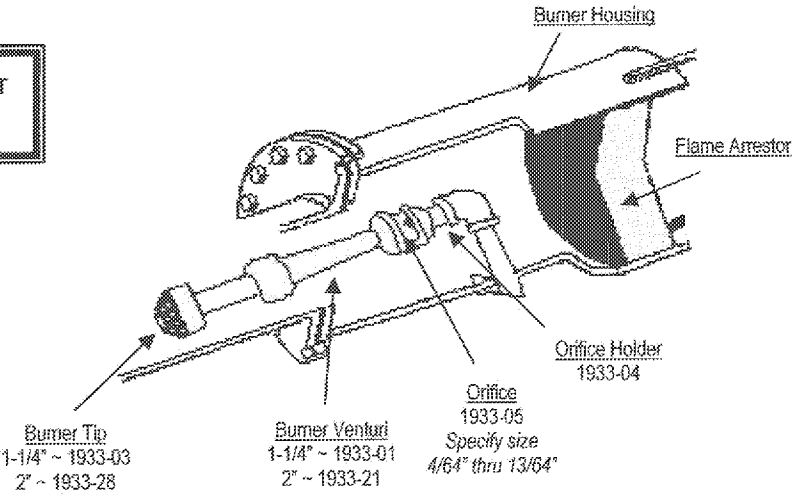


DECANO, INC.
1524 LARGO ~ BLOOMFIELD, NM 87413
505.632.2009 ~ FAX 505.632.0247

## BURNER SIZING
(Standard Cubic Feet Per Hour)

Gas Specific Gravity 0.65 Temperature 70°F (21°C)

Oficie Size in Inches:

| | 1/16" | 5/64" | 3/32" | 7/64" | 1/8" | 9/64" | 5/32" | 11/64" | 3/16" |
|---|---|---|---|---|---|---|---|---|---|
| PSIG 1 | 30 | 48 | 69 | 94 | 123 | 156 | 192 | 233 | 277 |
| PSIG 2 | 43 | 67 | 97 | 132 | 173 | 219 | 271 | 328 | 390 |
| PSIG 3 | 52 | 82 | 118 | 161 | 211 | 267 | 330 | 399 | 475 |
| PSIG 4 | 60 | 94 | 136 | 185 | 242 | 307 | 379 | 458 | 546 |
| PSIG 5 | 67 | 105 | 151 | 206 | 269 | 341 | 421 | 510 | 607 |
| PSIG 6 | 73 | 114 | 165 | 225 | 294 | 372 | 459 | 555 | 661 |
| PSIG 7 | 78 | 123 | 177 | 241 | 315 | 399 | 493 | 597 | 710 |
| PSIG 8 | 84 | 131 | 189 | 257 | 336 | 425 | 525 | 635 | 756 |
| PSIG 9 | 88 | 138 | 199 | 271 | 354 | 449 | 554 | 670 | 798 |
| PSIG 10 | 93 | 145 | 209 | 284 | 372 | 471 | 581 | 703 | 837 |
| PSIG 11 | 97 | 151 | 218 | 297 | 388 | 491 | 607 | 734 | 874 |
| PSIG 12 | 101 | 157 | 227 | 309 | 404 | 511 | 631 | 763 | 909 |
| PSIG 13 | 104 | 163 | 235 | 320 | 419 | 530 | 654 | 792 | 943 |
| PSIG 14 | 108 | 169 | 244 | 332 | 434 | 549 | 678 | 821 | 977 |
| PSIG 15 | 112 | 175 | 252 | 344 | 449 | 568 | 702 | 849 | 1011 |
| PSIG 16 | 116 | 181 | 261 | 355 | 464 | 588 | 725 | 878 | 1045 |
| PSIG 17 | 119 | 187 | 269 | 367 | 479 | 607 | 749 | 906 | 1079 |
| PSIG 18 | 123 | 193 | 278 | 378 | 494 | 626 | 773 | 935 | 1113 |

*For more information on these or any other equipment you may be interested in, contact:*
*Decano, Inc.*
*1524 Largo*
*Bloomfield, NM 87413*
*505-632-2009*


DECANO, INC.
1524 Largo, Bloomfield, New Mexico 87413
505-632-2009
Fax: 505-632-0247


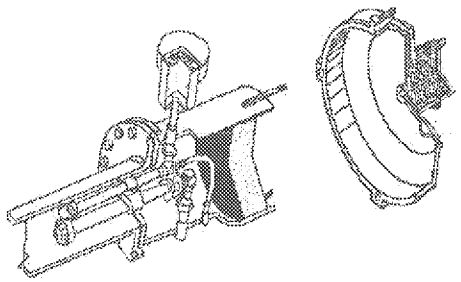

# SureFire Pilot Light

# Venturi Burners

# Automatic Secondary Air Controllers

# C65 & C65 ICHP MicroTurbine Natural Gas

## Achieve ultra-low emissions and reliable electrical/thermal generation from natural gas.

- Ultra-low emissions
- One moving part – minimal maintenance and downtime
- Patented air bearing – no lubricating oil or coolant
- 5 and 9 year Factory Protection Plans available
- Remote monitoring and diagnostic capabilities
- Integrated utility synchronization and protection[1]
- Small, modular design allows for easy, low-cost installation
- Reliable – tens of millions of run hours and counting

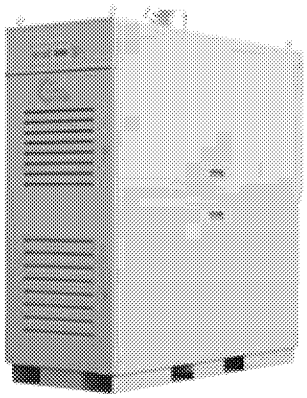

C65 MicroTurbine

### Electrical Performance[2]

| | |
|---|---|
| Electrical Power Output | 65kW |
| Voltage | 400–480 VAC |
| Electrical Service | 3-Phase, 4 wire |
| Frequency | 50/60 Hz, grid connect operation |
| | 10–60 Hz, stand alone operation |
| Maximum Output Current | 100A, grid connect operation |
| | 100A, stand alone operation[3] |
| Electrical Efficiency LHV | 29% |

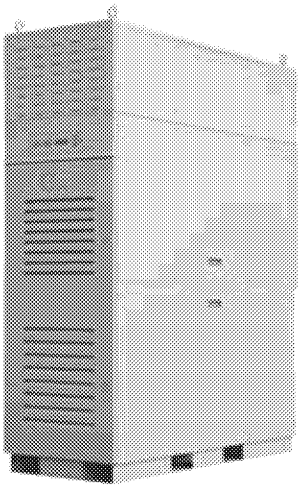

C65 ICHP MicroTurbine

### Fuel/Engine Characteristics[2]

| | |
|---|---|
| Natural Gas HHV | 30.7–47.5 MJ/m³ (825–1,275 BTU/scf) |
| Inlet Pressure[4] | 517–552 kPa gauge (75–80 psig) |
| Fuel Flow HHV | 888 MJ/hr (842,000 BTU/hr) |
| Net Heat Rate LHV | 12.4 MJ/kWh (11,800 BTU/kWh) |

### Exhaust Characteristics[2]

| | |
|---|---|
| NOx Emissions at 15% $O_2$[5] | < 9 ppmvd (19 mg/m³) |
| NOx / Electrical Output[5] | 0.16 g/bhp-hr (0.46 lb/MWhe) |
| Exhaust Gas Flow | 0.49 kg/s (1.08 lbm/s) |
| Exhaust Gas Temperature | 309°C (588°F) |

*Reliable power when and where you need it. Clean and simple.*

| C65 ICHP Heat Recovery[3] | | |
|---|---|---|
| Integrated Heat Recovery Module Type | Copper Core | Stainless Steel Core |
| Hot Water Heat Recovery | 120 kW (408,000 BTU/hr) | 74 kW (251,000 BTU/hr) |
| Total System Efficiency LHV | 82% | 62% |

| Dimensions & Weight[7] | C65 | C65 ICHP |
|---|---|---|
| Width x Depth[8] x Height[9] | 0.76 x 1.9 x 1.9 m<br>(30 x 77 x 76 in) | 0.76 x 2.2 x 2.4 m<br>(30 x 87 x 93 in) |
| Weight - Grid Connect Model | 758 kg (1,671 lb) | 1000 kg (2,200 lb) |
| Weight - Dual Mode Model | 1121 kg (2,471 lb) | 1364 kg (3,000 lb) |

| Minimum Clearance Requirements[10] | C65 | C65 ICHP |
|---|---|---|
| Vertical Clearance | 0.61 m (24 in) | 0.61 m (24 in) |
| Horizontal Clearance | | |
| Left & Right | 0.76 m (30 in) | 0.76 m (30 in) |
| Front[11] | 1.7 m (65 in) | 1.7 m (65 in) |
| Rear | 0.91 m (36 in) | 0.76 m (30 in) |

| Sound Levels | C65 | C65 ICHP |
|---|---|---|
| Acoustic Emissions at Full Load Power[12] | | |
| Nominal at 10 m (33 ft) | 70 dBA | 65 dBA |

## Certifications

- Certified to UL 2200 and UL 1741 for natural gas operation (UL files AU2687, E209370)
- Complies with IEEE 1547 and meets statewide utility interconnection requirements for California Rule 21 and the New York State Public Service Commission
- Materials Equipment Acceptance (MEA) approval for New York City
- Models available with optional equipment for CE Marking

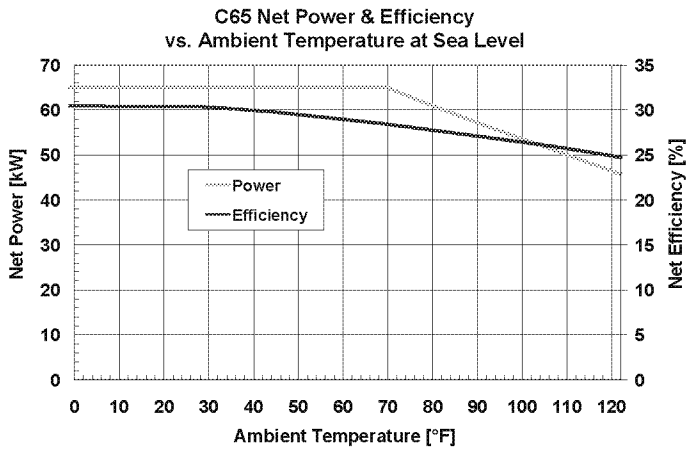


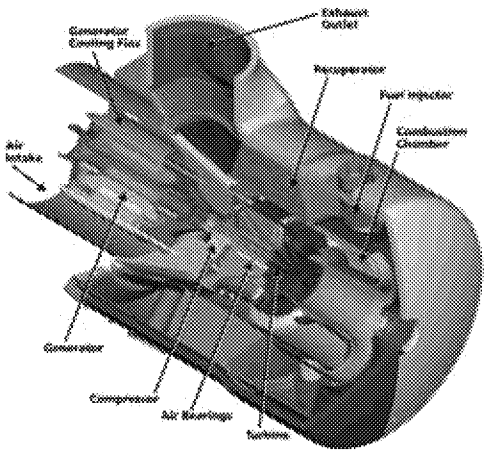

(1) Some utilities may require additional equipment for grid interconnectivity
(2) Nominal full power performance at ISO conditions: 59°F, 14.696 psia, 60% RH
(3) With linear load
(4) Inlet pressure for standard natural gas at 39.4 MJ/Nm³ (1,000 BUT/scf) (HHV)
(5) Exhaust emissions for standard natural gas at 39.4 MJ/Nm³ (1,000 BTU/scf) (HHV)
(6) Heat recovery for water inlet temperature of 38°C (100°F) and flow rate of 2.5 l/s (40 GPM)
(7) Approximate dimensions and weights
(8) Depth includes 10 inch extension for the heat recovery module rain hood on ICHP versions
(9) Height dimensions are to the roof line. Exhaust outlet extends at least 7 inches above the roof line
(10) Clearance requirements may increase due to local code considerations
(11) Dual Mode MicroTurbine configuration for Battery Removal clearance
(12) The optional acoustic inlet hood kit can reduce acoustic emissions at the front of the MicroTurbine by up to 5 dBA
*Specifications are not warranted and are subject to change without notice.*

21211 Nordhoff Street • Chatsworth • CA • 91311 • 866.422.7786 • 818.734.5300 • www.capstoneturbine.com
©2010 Capstone Turbine Corporation. P0911 C65 & C65 ICHP Data Sheet CAP139 | Capstone P/N 331035E

Capstone Turbine Corporation • 21211 Nordhoff Street • Chatsworth • CA 91311 • USA
Phone: (818) 734-5300 • Fax: (818) 734-5320 • Web: www.microturbine.com

# Technical Reference

## Capstone MicroTurbine™ Systems Emissions

## Summary

Capstone MicroTurbine™ systems are inherently clean and can meet some of the strictest emissions standards in the world. This technical reference is to provide customers with information that may be requested by local air permitting organizations or to compare air quality impacts of different technologies for a specific project. The preferred units of measure are "output based"; meaning that the quantity of a particular exhaust emission is reported relative to the useable output of the microturbine – typically in pounds per megawatt hour for electrical generating equipment. This technical reference also provides volumetric measurements in parts per million and milligrams per normal cubic meter. A conversion between several common units is also provided.

## Maximum Exhaust Emissions at ISO Conditions

Table 1 below summarizes the exhaust emissions at full power and ISO conditions for different Capstone microturbine models. Note that the fuel can have a significant impact on certain emissions. For example landfill and digester gas can be made up of a wide variety of fuel elements and impurities, and typically contains some percentage of carbon dioxide ($CO_2$). This $CO_2$ dilutes the fuel, makes complete combustion more difficult, and results in higher carbon monoxide emissions (CO) than for pipeline-quality natural gas.

**Table 1. Emission for Different Capstone Microturbine Models in [lb/MWhe]**

| Model | Fuel | NOx | CO | VOC (5) |
|---|---|---|---|---|
| C30 NG | Natural Gas (1) | 0.64 | 1.8 | 0.23 |
| CR30 MBTU | Landfill Gas (2) | 0.64 | 22.0 | 1.00 |
| CR30 MBTU | Digester Gas (3) | 0.64 | 11.0 | 1.00 |
| C30 Liquid | Diesel #2 (4) | 2.60 | 0.41 | 0.23 |
| C65 NG Standard | Natural Gas (1) | 0.46 | 1.25 | 0.10 |
| C65 NG Low NOx | Natural Gas (1) | 0.17 | 1.30 | 0.10 |
| C65 NG CARB | Natural Gas (1) | 0.17 | 0.24 | 0.05 |
| CR65 Landfill | Landfill Gas (2) | 0.46 | 4.0 | 0.10 |
| CR65 Digester | Digester Gas (3) | 0.46 | 4.0 | 0.10 |
| C200 NG | Natural Gas (1) | 0.40 | 1.10 | 0.10 |
| C200 NG CARB | Natural Gas (1) | 0.14 | 0.20 | 0.04 |
| CR200 Digester | Digester Gas (3) | 0.40 | 3.6 | 0.10 |

Notes:

(1) Emissions for standard natural gas at 1,000 BTU/scf (HHV) or 39.4 MJ/m3 (HHV)
(2) Emissions for surrogate gas containing 42% natural gas, 39% $CO_2$, and 19% Nitrogen
(3) Emissions for surrogate gas containing 63% natural gas and 37% $CO_2$
(4) Emissions for Diesel #2 according to ASTM D975-07b
(5) Expressed as Methane



Capstone reserves the right to change or modify, without notice, the design, specifications, and/or contents of this document without incurring any obligation either with respect to equipment previously sold or in the process of construction.

ED_004016Q_00001316-00146

Table 2 provides the same output-based information shown in Table 1, but expressed in grams per horsepower hour (g/hp-hr).

**Table 2. Emission for Different Capstone Microturbine Models in [g/hp-hr]**

| Model | Fuel | NOx | CO | VOC (5) |
|---|---|---|---|---|
| C30 NG | Natural Gas (1) | 0.22 | 0.60 | 0.078 |
| CR30 MBTU | Landfill Gas (2) | 0.22 | 7.4 | 0.340 |
| CR30 MBTU | Digester Gas (3) | 0.22 | 3.7 | 0.340 |
| C30 Liquid | Diesel #2 (4) | 0.90 | 0.14 | 0.078 |
| C65 NG Standard | Natural Gas (1) | 0.16 | 0.42 | 0.034 |
| C65 NG Low NOx | Natural Gas (1) | 0.06 | 0.44 | 0.034 |
| C65 NG CARB | Natural Gas (1) | 0.06 | 0.08 | 0.017 |
| CR65 Landfill | Landfill Gas (2) | 0.16 | 1.4 | 0.034 |
| CR65 Digester | Digester Gas (3) | 0.16 | 1.4 | 0.034 |
| C200 NG | Natural Gas (1) | 0.14 | 0.37 | 0.034 |
| C200 NG CARB | Natural Gas (1) | 0.05 | 0.07 | 0.014 |
| CR200 Digester | Digester Gas (3) | 0.14 | 1.3 | 0.034 |

Notes: - same as for Table 1

Emissions may also be reported on a volumetric basis, with the most common unit of measurement being parts per million. This is typically a measurement that is corrected to specific oxygen content in the exhaust and without considering moisture content. The abbreviation for this unit of measurement is "ppmvd" (parts per million by volume, dry) and is corrected to 15% oxygen for electrical generating equipment such as microturbines. The relationship between an output based measurement like pounds per MWh and a volumetric measurement like ppmvd depends on the characteristics of the generating equipment and the molecular weight of the criteria pollutant being measured. Table 3 expresses the emissions in ppmvd at 15% oxygen for the Capstone microturbine models shown in Table 1. Note that raw measurements expressed in ppmv will typically be lower than the corrected values shown in Table 3 because the microturbine exhaust has greater than 15% oxygen.

Another volumetric unit of measurement expresses the mass of a specific criteria pollutant per standard unit of volume. Table 4 expresses the emissions in milligrams per normal cubic meter at 15% oxygen. Normal conditions for this purpose are expresses as one atmosphere of pressure and zero degrees Celsius. Note that both the ppmvd and mg/m3 measurements are for specific oxygen content. A conversion can be made to adjust either unit of measurement to other reference oxygen contents, if required. Use the equation below to convert from one reference oxygen content to another:

$$\text{Emissions at New } O_2 = \frac{(20.9 - \text{New } O_2 \text{ Percent})}{(20.9 - \text{Current } O_2 \text{ Percent})} \times \text{Emissions at Current } O_2$$

For example, to express 9 ppmvd of NOx at 15% oxygen to ppmvd at 3% oxygen:

$$\text{Emissions at 3\% } O_2 = \frac{(20.9 - 3.0)}{(20.9 - 15.0)} \times 9 = 27 \text{ ppmvd}$$


Capstone reserves the right to change or modify, without notice, the design, specifications, and/or contents of this document without incurring any obligation either with respect to equipment previously sold or in the process of construction.

**Table 3. Emission for Different Capstone Microturbine Models in [ppmvd] at 15% $O_2$**

| Model | Fuel | NOx | CO | VOC |
|---|---|---|---|---|
| C30 NG | Natural Gas (1) | 9 | 40 | 9 |
| CR30 MBTU | Landfill Gas (2) | 9 | 500 | 40 |
| CR30 MBTU | Digester Gas (3) | 9 | 250 | 40 |
| C30 Liquid | Diesel #2 (4) | 35 | 9 | 9 |
| C65 NG Standard | Natural Gas (1) | 9 | 40 | 7 |
| C65 NG Low NOx | Natural Gas (1) | 4 | 40 | 7 |
| C65 NG CARB | Natural Gas (1) | 4 | 8 | 3 |
| CR65 Landfill | Landfill Gas (2) | 9 | 130 | 7 |
| CR65 Digester | Digester Gas (3) | 9 | 130 | 7 |
| C200 NG | Natural Gas (1) | 9 | 40 | 7 |
| C200 NG CARB | Natural Gas (1) | 4 | 8 | 3 |
| CR200 Digester | Digester Gas (3) | 9 | 130 | 7 |

Notes: same as Table 1

**Table 4. Emission for Different Capstone Microturbine Models in [mg/m3] at 15% $O_2$**

| Model | Fuel | NOx | CO | VOC (5) |
|---|---|---|---|---|
| C30 NG | Natural Gas (1) | 18 | 50 | 6 |
| CR30 MBTU | Landfill Gas (2) | 18 | 620 | 30 |
| CR30 MBTU | Digester Gas (3) | 18 | 310 | 30 |
| C30 Liquid | Diesel #2 (4) | 72 | 11 | 6 |
| C65 NG Standard | Natural Gas (1) | 19 | 50 | 5 |
| C65 NG Low NOx | Natural Gas (1) | 8 | 50 | 5 |
| C65 NG CARB | Natural Gas (1) | 8 | 9 | 2 |
| CR65 Landfill | Landfill Gas (2) | 18 | 160 | 5 |
| CR65 Digester | Digester Gas (3) | 18 | 160 | 5 |
| C200 NG | Natural Gas (1) | 18 | 50 | 5 |
| C200 NG CARB | Natural Gas (1) | 8 | 9 | 2 |
| CR200 Digester | Digester Gas (3) | 18 | 160 | 5 |

Notes: same as Table 1

The emissions stated in Tables 1, 2, 3 and 4 are guaranteed by Capstone for new microturbines during the standard warranty period. They are also the expected emissions for a properly maintained microturbine according to manufacturer's published maintenance schedule for the useful life of the equipment.

## Emissions at Full Power but Not at ISO Conditions

The maximum emissions in Tables 1, 2, 3 and 4 are at full power under ISO conditions. These levels are also the expected values at full power operation over the published allowable ambient temperature and elevation ranges.


Capstone reserves the right to change or modify, without notice, the design, specifications, and/or contents of this document without incurring any obligation either with respect to equipment previously sold or in the process of construction.

## Emissions at Part Power

Capstone microturbines are designed to maintain combustion stability and low emissions over a wide operating range. Capstone microturbines utilize multiple fuel injectors, which are switched on or off depending on the power output of the turbine. All injectors are typically on when maximum power is demanded, regardless of the ambient temperature or elevation. As the load requirements of the microturbine are decreased, injectors will be switched off to maintain stability and low emissions. However, the emissions relative to the lower power output may increase. This effect differs for each microturbine model.

## Emissions Calculations for Permitting

Air Permitting agencies are normally concerned with the maximum amount of a given pollutant being emitted per unit of time (for example pounds per day of NOx). The simplest way to make this calculation is to use the maximum microturbine full electrical power output (expressed in MW) multiplied by the emissions rate in pounds per MWhe times the number of hours per day. For example, the C65 CARB microturbine operating on natural gas would have a NOx emissions rate of:

NOx = .17 X (65/1000) X 24 = .27 pounds per day

This would be representative of operating the equipment full time, 24 hours per day, at full power output of 65 kWe.

As a general rule, if local permitting is required, use the published agency levels as the stated emissions for the permit and make sure that this permitted level is above the calculated values in this technical reference.

## Consideration of Useful Thermal Output

Capstone microturbines are often deployed where their clean exhaust can be used to provide heating or cooling, either directly or using hot water or other heat transfer fluids. In this case, the local permitting or standards agencies will usually consider the emissions from traditional heating sources as being displaced by the useful thermal output of the microturbine exhaust energy. This increases the useful output of the microturbine, and decreases the relative emissions of the combined heat and power system. For example, the CARB version C65 ICHP system with integral heat recovery can achieve a total system efficiency of 70% or more, depending on inlet water temperatures and other installation-specific characteristics. The electric efficiency of the CARB version C65 microturbine is 28% at ISO conditions. This means that the total NOx output based emissions, including the captured thermal value, is the electric-only emissions times the ratio of electric efficiency divided by total system efficiency:

NOx = .17 X 28/70 = .068 pounds per MWh (based on total system output)

This is typically much less than the emissions that would result from providing electric power using traditional central power plants, plus the emissions from a local hot water heater or boiler. In fact microturbine emissions are so low compared with traditional hot water heaters that installing a Capstone microturbine with heat recovery can actually decrease the local emissions of NOx and other criteria pollutants, without even considering the elimination of emissions from a remote power plant.


Capstone reserves the right to change or modify, without notice, the design, specifications, and/or contents of this document without incurring any obligation either with respect to equipment previously sold or in the process of construction.

# Greenhouse Gas Emissions

Many gasses are considered "greenhouse gasses", and agencies have ranked them based on their global warming potential (GWP) in the atmosphere compared with carbon dioxide ($CO_2$), as well as their ability to maintain this effect over time. For example, methane is a greenhouse gas with a GWP of 21. Criteria pollutants like NOx and organic compounds like methane are monitored by local air permitting authorities, and are subject to strong emissions controls. Even though some of these criteria pollutants can be more troublesome for global warming than $CO_2$, they are released in small quantities – especially from Capstone microturbines. So the major contributor of concern is carbon dioxide, or $CO_2$. Emission of $CO_2$ depends on two things:

1. Carbon content in the fuel
2. Efficiency of converting fuel to useful energy

It is for these reasons that many local authorities are focused on using clean fuels (for example natural gas compared with diesel fuel), achieving high efficiency using combined heat and power systems, and displacing emissions from traditional power plants using renewable fuels like waste landfill and digester gasses.

Table 5 shows the typical $CO_2$ emissions due to combustion for different Capstone microturbine models at full power and ISO conditions. The values do not include $CO_2$ that may already exist in the fuel itself, which is typical for renewable fuels like landfill and digester gas. These values are expressed on an output basis, as is done for criteria pollutants in Table 1. The table shows the pounds per megawatt hour based on electric power output only, as well as considering total useful output in a CHP system with total 70% efficiency (LHV). As for criteria pollutants, the relative quantity of $CO_2$ released is substantially less when useful thermal output is also considered in the measurement.

**Table 5. $CO_2$ Emission for Capstone Microturbine Models in [lb/MWh]**

| Model | Fuel | $CO_2$ | |
|---|---|---|---|
| | | Electric Only | 70% Total CHP |
| C30 NG | Natural Gas (1) | 1,690 | 625 |
| CR30 MBTU | Landfill Gas (1) | 1,690 | 625 |
| CR30 MBTU | Digester Gas (1) | 1,690 | 625 |
| C30 Liquid | Diesel #2 (2) | 2,400 | 855 |
| C65 NG Standard | Natural Gas (1) | 1,520 | 625 |
| C65 NG Low NOx | Natural Gas (1) | 1,570 | 625 |
| C65 NG CARB | Natural Gas (1) | 1,570 | 625 |
| CR65 Landfill | Landfill Gas (1) | 1,520 | 625 |
| CR65 Digester | Digester Gas (1) | 1,520 | 625 |
| C200 NG | Natural Gas (1) | 1,330 | 625 |
| C200 NG CARB | Natural Gas (1) | 1,330 | 625 |
| CR200 Digester | Digester Gas (1) | 1,330 | 625 |

Notes:

(1) Emissions due to combustion, assuming natural gas with $CO_2$ content of 117 lb/MMBTU (HHV)

(2) Emissions due to combustion, assuming diesel fuel with $CO_2$ content of 160 lb/MMBTU (HHV)



Capstone reserves the right to change or modify, without notice, the design, specifications, and/or contents of this document without incurring any obligation either with respect to equipment previously sold or in the process of construction.

# Useful Conversions

The conversions shown in Table 6 can be used to obtain other units of emissions outputs. These are approximate conversions.

**Table 6. Useful Unit Conversions**

| From | Multiply By | To Get |
|---|---|---|
| lb/MWh | 0.338 | g/bhp-hr |
| g/bhp-hr | 2.96 | lb/MWh |
| lb | 0.454 | kg |
| kg | 2.20 | lb |
| kg | 1,000 | g |
| hp (electric) | .746 | kW |
| kW | 1.34 | hp (electric) |
| MW | 1,000 | kW |
| kW | 0.001 | MW |

# Definitions

- ISO conditions are defined as: 15 °C (59 °F), 60% relative humidity, and sea level pressure of 101.3 kPa (14.696 psia).
- HHV: Higher Heating Value
- LHV: Lower Heating Value
- $kW_{th}$: Kilowatt (thermal)
- $kW_e$ : Kilowatt (electric)
- MWh: Megawatt-hour
- hp-hr: horsepower-hour (sometimes referred to as “electric horsepower-hour”)
- Scf: Standard cubic foot (standard references ISO temperature and pressure)
- m3: Normal cubic meter (normal references 0 °C and one atmosphere pressure)

# Capstone Contact Information

If questions arise regarding this technical reference, please contact Capstone Turbine Corporation for assistance and information:

## Capstone Applications

Toll Free Telephone: (866) 4-CAPSTONE or (866) 422-7786

Fax: (818) 734-5385

E-mail: applications@capstoneturbine.com



Capstone reserves the right to change or modify, without notice, the design, specifications, and/or contents of this document without incurring any obligation either with respect to equipment previously sold or in the process of construction.

# C200 MicroTurbine
# High-pressure Natural Gas

## World's largest air-bearing microturbine produces 200kW of clean, green, and reliable power.

- Ultra-low emissions
- One moving part – minimal maintenance and downtime
- Patented air bearing – no lubricating oil or coolant
- 5 and 9 year Factory Protection Plans available
- Remote monitoring and diagnostic capabilities
- Integrated utility synchronization and protection
- Small, modular design allows for easy, low-cost installation
- Proven technology with tens of millions of run hours and counting
- Internal fuel gas compressor available for low fuel pressure natural gas applications

C200 MicroTurbine

### Electrical Performance[1]

| | |
|---|---|
| Electrical Power Output | 200kW |
| Voltage | 400–480 VAC |
| Electrical Service | 3-Phase, 4 wire |
| Frequency | 50/60 Hz, grid connect operation |
| | 10–60 Hz, stand alone operation |
| Maximum Output Current | 290A RMS @ 400V, grid connect operation |
| | 240A RMS @ 480V, grid connect operation |
| | 310A RMS, stand alone operation[2] |
| Electrical Efficiency LHV | 33% |

### Fuel/Engine Characteristics[1]

| | |
|---|---|
| Natural Gas HHV | 30.7–47.5 MJ/m$^3$ (825–1,275 BTU/scf) |
| Inlet Pressure[3] | 517–552 kPa gauge (75–80 psig) |
| Fuel Flow HHV | 2,400 MJ/hr (2,280,000 BTU/hr) |
| Net Heat Rate LHV | 10.9 MJ/kWh (10,300 BTU/kWh) |

### Exhaust Characteristics[1]

| | |
|---|---|
| NOx Emissions @ 15% $O_2$[4] | < 9 ppmvd (18 mg/m$^3$) |
| NOx / Electrical Output[4] | 0.14 g/bhp-hr (0.4 lb/MWhe) |
| Exhaust Gas Flow | 1.3 kg/s (2.9 lbm/s) |
| Exhaust Gas Temperature | 280°C (535°F) |
| Exhaust Energy | 1,420 MJ/hr (1,350,000 BTU/hr) |

*Reliable power when and where you need it. Clean and simple.*

## Dimensions & Weight[5]

| | |
|---|---|
| Width x Depth x Height[6] | 1.7 x 3.8 x 2.5 m (67 x 150 x 98 in) |
| Weight – Grid Connect Model | 2776 kg (6,120 lb) |
| Weight – Dual Mode Model | 3413 kg (7,525 lb) |

## Minimum Clearance Requirements[7]

| | |
|---|---|
| Vertical Clearance | 0.6 m (24 in) |
| Horizontal Clearance | |
| Left & Right | 1.1 m (42 in) |
| Front | 1.1 m (42 in) |
| Rear | 1.8 m (70 in) |

## Sound Levels

| | |
|---|---|
| Acoustic Emissions at Full Load Power | |
| Nominal at 10 m (33 ft) | 65 dBA |

## Certifications

- UL 2200 and UL 1741 natural gas operation[8]
- Complies with IEEE 1547 and meets statewide utility interconnection requirements for California Rule 21 and the New York State Public Service Commission
- CE certified

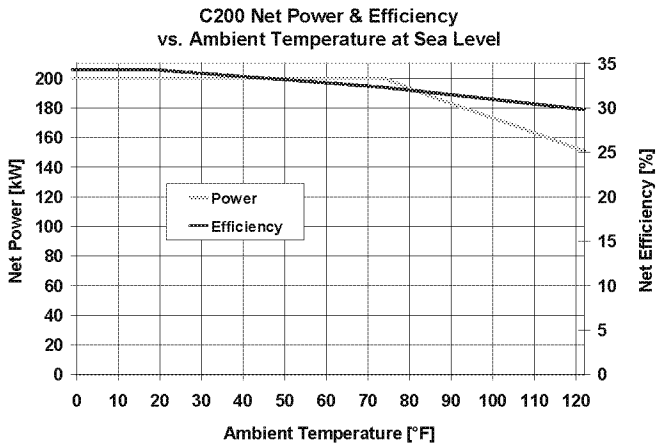


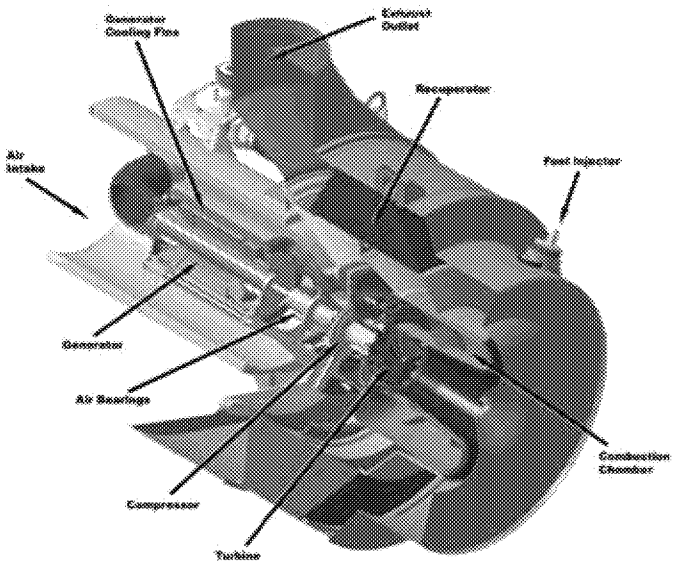


(1) Nominal full power performance at ISO conditions: 59°F, 14.696 psia, 60% RH
(2) With linear load
(3) Inlet pressure for standard natural gas at 39.4 MJ/Nm³ (1,000 BTU/scf) (HHV)
(4) Emissions for standard natural gas at 39.4 MJ/Nm³ (1,000 BTU/scf) (HHV)
(5) Approximate dimensions and weight
(6) Height dimensions are to the roof line. Exhaust outlet extends at least 8 inches above the roof line
(7) Clearance requirements may increase due to local code considerations
(8) All natural gas models are planned to be UL Listed

*Specifications are not warranted and are subject to change without notice.*

21211 Nordhoff Street • Chatsworth • CA • 91311 • 866.422.7786 • 818.734.5300 • www.capstoneturbine.com
©2010 Capstone Turbine Corporation. P0911 C200 HP Natural Gas Data Sheet CAP146 | Capstone P/N 331042E

# CR200 MicroTurbine Renewable Fuels

## World's largest air-bearing microturbine produces 200kW of clean, green, and reliable power.

- Ultra-low emissions
- Accepts renewable fuels with up to 5,000 ppm $H_2S$ content
- One moving part – minimal maintenance and downtime
- Patented air bearing – no lubricating oil or coolant
- 5 and 9 year Factory Protection Plans available
- Remote monitoring and diagnostic capabilities
- Integrated utility synchronization and protection
- Small, modular design allows for easy, low-cost installation
- Proven technology with tens of millions of run hours and counting

C200 MicroTurbine

### Electrical Performance[1]

| | |
|---|---|
| Electrical Power Output[2] | 200kW |
| Voltage | 400–480 VAC |
| Electrical Service | 3-Phase, 4 wire |
| Frequency | 50/60 Hz |
| Maximum Output Current | 290A RMS @ 400V, grid connect operation |
| | 240A RMS @ 480V, grid connect operation |
| Electrical Efficiency LHV | 33% |

### Fuel/Engine Characteristics[1]

| | |
|---|---|
| Landfill Gas HHV | 13.0–22.3 MJ/m³ (350–600 BTU/scf) |
| Digester Gas HHV | 20.5–32.6 MJ/m³ (550–875 BTU/scf) |
| Inlet Pressure | 517–552 kPa gauge (75–80 psig) |
| Fuel Flow HHV | 2,400 MJ/hr (2,280,000 BTU/hr) |
| Net Heat Rate LHV | 10.9 MJ/kWh (10,300 BTU/kWh) |
| $H_2S$ content | < 5,000 ppmv |

### Exhaust Characteristics[1]

| | |
|---|---|
| NOx Emissions @ 15% $O_2$[3] | < 9 ppmvd (18 mg/m³) |
| NOx / Electrical Output[3] | 0.14 g/bhp-hr (0.40 lb/MWhe) |
| Exhaust Gas Flow | 1.3 kg/s (2.9 lbm/s) |
| Exhaust Gas Temperature | 280°C (535°F) |
| Exhaust Energy | 1,420 MJ/hr (1,350,000 BTU/hr) |

*Reliable power when and where you need it. Clean and simple.*

## Dimensions & Weight[4]

| | |
|---|---|
| Width x Depth x Height[5] | 1.7 x 3.8 x 2.5 m (67 x 150 x 98 in) |
| Weight | 2776 kg (6,120 lb) |

## Minimum Clearance Requirements[6]

| | |
|---|---|
| Vertical Clearance | 0.6 m (24 in) |
| Horizontal Clearance | |
| Left & Right | 1.1 m (42 in) |
| Front | 1.1 m (42 in) |
| Rear | 1.8 m (70 in) |

## Sound Levels

| | |
|---|---|
| Acoustic Emissions at Full Load Power | |
| Nominal at 10 m (33 ft) | 65 dBA |

## Planned Certifications

- Will comply with UL 2200 and UL 1741 for raw natural gas and biogas operation under existing UL files[7]
- Will comply with IEEE 1547 and will meet statewide utility interconnection requirements for California Rule 21 and the New York State Public Service Commission
- Models will be available with optional equipment for CE marking
- Models will be available with optional 2008 CARB certification for waste gas

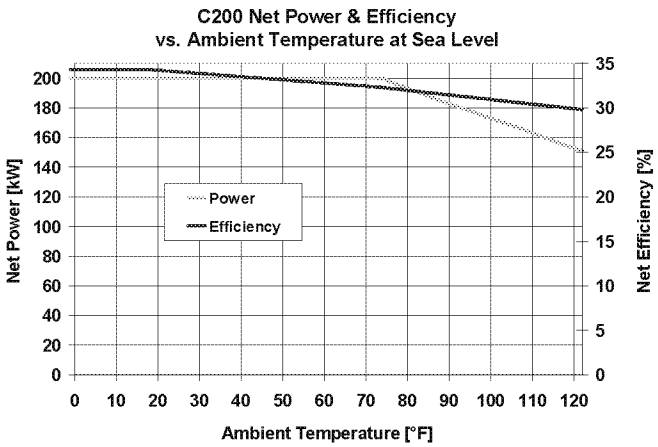


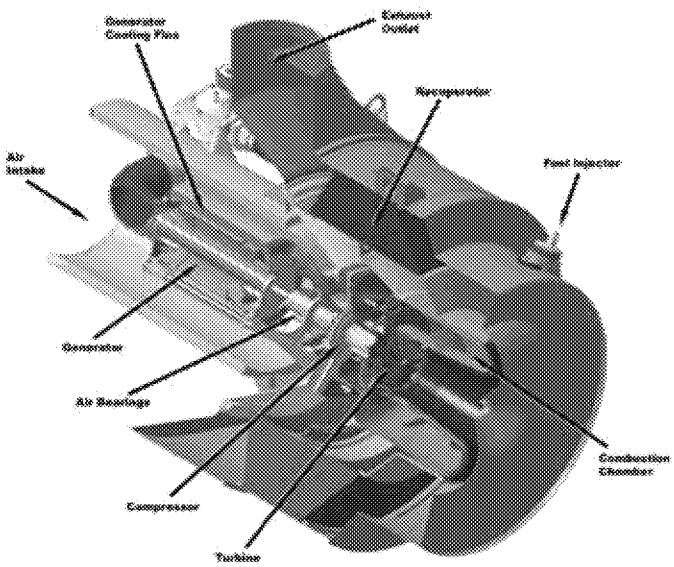


(1) Nominal full power performance at ISO conditions: 59°F, 14.696 psia, 60% RH
(2) Minimum power output is 100kW for these fuels. Additional fuel gas conditioning required. Contact Capstone for specific application guidance
(3) For surrogate landfill and digester gases. Please contact Capstone for additional details
(4) Approximate dimensions and weights
(5) Height dimensions are to the roof line. Exhaust outlet extends at least 8 inches above the roof line
(6) Clearance requirements may increase due to local code considerations
(7) All models are planned to be UL Listed or available with optional equipment for CE marking

*Specifications are not warranted and are subject to change without notice.*

21211 Nordhoff Street • Chatsworth • CA • 91311 • 866.422.7786 • 818.734.5300 • www.capstoneturbine.com
©2010 Capstone Turbine Corporation. P0911 CR200 Renewable Fuels Data Sheet CAP147 | Capstone P/N 331043E

Table 1.4-1. EMISSION FACTORS FOR NITROGEN OXIDES ($NO_x$) AND CARBON MONOXIDE (CO) FROM NATURAL GAS COMBUSTION[a]

| Combustor Type (MMBtu/hr Heat Input) [SCC] | $NO_x$[b] | | CO | |
|---|---|---|---|---|
| | Emission Factor ($lb/10^6$ scf) | Emission Factor Rating | Emission Factor ($lb/10^6$ scf) | Emission Factor Rating |
| Large Wall-Fired Boilers (>100) [1-01-006-01, 1-02-006-01, 1-03-006-01] | | | | |
| Uncontrolled (Pre-NSPS)[c] | 280 | A | 84 | B |
| Uncontrolled (Post-NSPS)[c] | 190 | A | 84 | B |
| Controlled - Low $NO_x$ burners | 140 | A | 84 | B |
| Controlled - Flue gas recirculation | 100 | D | 84 | B |
| Small Boilers (<100) [1-01-006-02, 1-02-006-02, 1-03-006-02, 1-03-006-03] | | | | |
| Uncontrolled | 100 | B | 84 | B |
| Controlled - Low $NO_x$ burners | 50 | D | 84 | B |
| Controlled - Low $NO_x$ burners/Flue gas recirculation | 32 | C | 84 | B |
| Tangential-Fired Boilers (All Sizes) [1-01-006-04] | | | | |
| Uncontrolled | 170 | A | 24 | C |
| Controlled - Flue gas recirculation | 76 | D | 98 | D |
| Residential Furnaces (<0.3) [No SCC] | | | | |
| Uncontrolled | 94 | B | 40 | B |

[a] Reference 11. Units are in pounds of pollutant per million standard cubic feet of natural gas fired. To convert from $lb/10^6$ scf to $kg/10^6$ $m^3$, multiply by 16. Emission factors are based on an average natural gas higher heating value of 1,020 Btu/scf. To convert from $lb/10^6$ scf to lb/MMBtu, divide by 1,020. The emission factors in this table may be converted to other natural gas heating values by multiplying the given emission factor by the ratio of the specified heating value to this average heating value. SCC = Source Classification Code. ND = no data. NA = not applicable.

[b] Expressed as $NO_2$. For large and small wall fired boilers with SNCR control, apply a 24 percent reduction to the appropriate $NO_X$ emission factor. For tangential-fired boilers with SNCR control, apply a 13 percent reduction to the appropriate $NO_X$ emission factor.

[c] NSPS=New Source Performance Standard as defined in 40 CFR 60 Subparts D and Db. Post-NSPS units are boilers with greater than 250 MMBtu/hr of heat input that commenced construction modification, or reconstruction after August 17, 1971, and units with heat input capacities between 100 and 250 MMBtu/hr that commenced construction modification, or reconstruction after June 19, 1984.

TABLE 1.4-2. EMISSION FACTORS FOR CRITERIA POLLUTANTS AND GREENHOUSE GASES FROM NATURAL GAS COMBUSTION[a]

| Pollutant | Emission Factor ($lb/10^6$ scf) | Emission Factor Rating |
|---|---|---|
| $CO_2$[b] | 120,000 | A |
| Lead | 0.0005 | D |
| $N_2O$ (Uncontrolled) | 2.2 | E |
| $N_2O$ (Controlled-low-$NO_X$ burner) | 0.64 | E |
| PM (Total)[c] | 7.6 | D |
| PM (Condensable)[c] | 5.7 | D |
| PM (Filterable)[c] | 1.9 | B |
| $SO_2$[d] | 0.6 | A |
| TOC | 11 | B |
| Methane | 2.3 | B |
| VOC | 5.5 | C |

[a] Reference 11. Units are in pounds of pollutant per million standard cubic feet of natural gas fired. Data are for all natural gas combustion sources. To convert from $lb/10^6$ scf to $kg/10^6$ $m^3$, multiply by 16. To convert from $lb/10^6$ scf to 1b/MMBtu, divide by 1,020. The emission factors in this table may be converted to other natural gas heating values by multiplying the given emission factor by the ratio of the specified heating value to this average heating value. TOC = Total Organic Compounds. VOC = Volatile Organic Compounds.

[b] Based on approximately 100% conversion of fuel carbon to $CO_2$. $CO_2[lb/10^6 scf] = (3.67)(CON)(C)(D)$, where CON = fractional conversion of fuel carbon to $CO_2$, C = carbon content of fuel by weight (0.76), and D = density of fuel, $4.2x10^4$ $lb/10^6$ scf.

[c] All PM (total, condensible, and filterable) is assumed to be less than 1.0 micrometer in diameter. Therefore, the PM emission factors presented here may be used to estimate $PM_{10}$, $PM_{2.5}$ or $PM_1$ emissions. Total PM is the sum of the filterable PM and condensible PM. Condensible PM is the particulate matter collected using EPA Method 202 (or equivalent). Filterable PM is the particulate matter collected on, or prior to, the filter of an EPA Method 5 (or equivalent) sampling train.

[d] Based on 100% conversion of fuel sulfur to $SO_2$. Assumes sulfur content is natural gas of 2,000 grains/$10^6$ scf. The $SO_2$ emission factor in this table can be converted to other natural gas sulfur contents by multiplying the $SO_2$ emission factor by the ratio of the site-specific sulfur content (grains/$10^6$ scf) to 2,000 grains/$10^6$ scf.



ED_004016Q_00001316-00157

TABLE 1.4-3. EMISSION FACTORS FOR SPECIATED ORGANIC COMPOUNDS FROM NATURAL GAS COMBUSTION[a]

| CAS No. | Pollutant | Emission Factor ($lb/10^6$ scf) | Emission Factor Rating |
|---|---|---|---|
| 91-57-6 | 2-Methylnaphthalene[b, c] | 2.4E-05 | D |
| 56-49-5 | 3-Methylchloranthrene[b, c] | <1.8E-06 | E |
| | 7,12-Dimethylbenz(a)anthracene[b,c] | <1.6E-05 | E |
| 83-32-9 | Acenaphthene[b,c] | <1.8E-06 | E |
| 203-96-8 | Acenaphthylene[b,c] | <1.8E-06 | E |
| 120-12-7 | Anthracene[b,c] | <2.4E-06 | E |
| 56-55-3 | Benz(a)anthracene[b,c] | <1.8E-06 | E |
| 71-43-2 | Benzene[b] | 2.1E-03 | B |
| 50-32-8 | Benzo(a)pyrene[b,c] | <1.2E-06 | E |
| 205-99-2 | Benzo(b)fluoranthene[b,c] | <1.8E-06 | E |
| 191-24-2 | Benzo(g,h,i)perylene[b,c] | <1.2E-06 | E |
| 205-82-3 | Benzo(k)fluoranthene[b,c] | <1.8E-06 | E |
| 106-97-8 | Butane | 2.1E+00 | E |
| 218-01-9 | Chrysene[b,c] | <1.8E-06 | E |
| 53-70-3 | Dibenzo(a,h)anthracene[b,c] | <1.2E-06 | E |
| 25321-22-6 | Dichlorobenzene[b] | 1.2E-03 | E |
| 74-84-0 | Ethane | 3.1E+00 | E |
| 206-44-0 | Fluoranthene[b,c] | 3.0E-06 | E |
| 86-73-7 | Fluorene[b,c] | 2.8E-06 | E |
| 50-00-0 | Formaldehyde[b] | 7.5E-02 | B |
| 110-54-3 | Hexane[b] | 1.8E+00 | E |
| 193-39-5 | Indeno(1,2,3-cd)pyrene[b,c] | <1.8E-06 | E |
| 91-20-3 | Naphthalene[b] | 6.1E-04 | E |
| 109-66-0 | Pentane | 2.6E+00 | E |
| 85-01-8 | Phenanathrene[b,c] | 1.7E-05 | D |



ED_004016Q_00001316-00158

TABLE 1.4-3. EMISSION FACTORS FOR SPECIATED ORGANIC COMPOUNDS FROM NATURAL GAS COMBUSTION (Continued)

| CAS No. | Pollutant | Emission Factor ($lb/10^6$ scf) | Emission Factor Rating |
|---|---|---|---|
| 74-98-6 | Propane | 1.6E+00 | E |
| 129-00-0 | Pyrene[b, c] | 5.0E-06 | E |
| 108-88-3 | Toluene[b] | 3.4E-03 | C |

[a] Reference 11. Units are in pounds of pollutant per million standard cubic feet of natural gas fired. Data are for all natural gas combustion sources. To convert from $lb/10^6$ scf to $kg/10^6$ $m^3$, multiply by 16. To convert from $1b/10^6$ scf to lb/MMBtu, divide by 1,020. Emission Factors preceeded with a less-than symbol are based on method detection limits.

[b] Hazardous Air Pollutant (HAP) as defined by Section 112(b) of the Clean Air Act.

[c] HAP because it is Polycyclic Organic Matter (POM). POM is a HAP as defined by Section 112(b) of the Clean Air Act.

[d] The sum of individual organic compounds may exceed the VOC and TOC emission factors due to differences in test methods and the availability of test data for each pollutant.



ED_004016Q_00001316-00159

Table 3.1-3. EMISSION FACTORS FOR HAZARDOUS AIR POLLUTANTS FROM NATURAL GAS-FIRED STATIONARY GAS TURBINES[a]

| Emission Factors[b] - Uncontrolled | | |
|---|---|---|
| Pollutant | Emission Factor (lb/MMBtu)[c] | Emission Factor Rating |
| 1,3-Butadiene[d] | < 4.3 E-07 | D |
| Acetaldehyde | 4.0 E-05 | C |
| Acrolein | 6.4 E-06 | C |
| Benzene[e] | 1.2 E-05 | A |
| Ethylbenzene | 3.2 E-05 | C |
| Formaldehyde[f] | 7.1 E-04 | A |
| Naphthalene | 1.3 E-06 | C |
| PAH | 2.2 E-06 | C |
| Propylene Oxide[d] | < 2.9 E-05 | D |
| Toluene | 1.3 E-04 | C |
| Xylenes | 6.4 E-05 | C |

[a] SCC for natural gas-fired turbines include 2-01-002-01, 2-02-002-01, 2-02-002-03, 2-03-002-02, and 2-03-002-03. Hazardous Air Pollutants as defined in Section 112 (b) of the *Clean Air Act*.

[b] Factors are derived from units operating at high loads (≥80 percent load) only. For information on units operating at other loads, consult the background report for this chapter (Reference 16), available at "www.epa.gov/ttn/chief".

[c] Emission factors based on an average natural gas heating value (HHV) of 1020 Btu/scf at 60°F. To convert from (lb/MMBtu) to (lb/$10^6$ scf), multiply by 1020. These emission factors can be converted to other natural gas heating values by multiplying the given emission factor by the ratio of the specified heating value to this heating value.

[d] Compound was not detected. The presented emission value is based on one-half of the detection limit.

[e] Benzene with SCONOX catalyst is 9.1 E-07, rating of D.

[f] Formaldehyde with SCONOX catalyst is 2.0 E-05, rating of D.



ED_004016Q_00001316-00160

Table 3.2-2. UNCONTROLLED EMISSION FACTORS FOR 4-STROKE LEAN-BURN ENGINES[a]
(SCC 2-02-002-54)

| Pollutant | Emission Factor (lb/MMBtu)[b] (fuel input) | Emission Factor Rating |
|---|---|---|
| Criteria Pollutants and Greenhouse Gases | | |
| $NO_x$[c] 90 - 105% Load | 4.08 E+00 | B |
| $NO_x$[c] <90% Load | 8.47 E-01 | B |
| CO[c] 90 - 105% Load | 3.17 E-01 | C |
| CO[c] <90% Load | 5.57 E-01 | B |
| $CO_2$[d] | 1.10 E+02 | A |
| $SO_2$[e] | 5.88 E-04 | A |
| TOC[f] | 1.47 E+00 | A |
| Methane[g] | 1.25 E+00 | C |
| VOC[h] | 1.18 E-01 | C |
| PM10 (filterable)[i] | 7.71 E-05 | D |
| PM2.5 (filterable)[i] | 7.71 E-05 | D |
| PM Condensable[j] | 9.91 E-03 | D |
| Trace Organic Compounds | | |
| 1,1,2,2-Tetrachloroethane[k] | <4.00 E-05 | E |
| 1,1,2-Trichloroethane[k] | <3.18 E-05 | E |
| 1,1-Dichloroethane | <2.36 E-05 | E |
| 1,2,3-Trimethylbenzene | 2.30 E-05 | D |
| 1,2,4-Trimethylbenzene | 1.43 E-05 | C |
| 1,2-Dichloroethane | <2.36 E-05 | E |
| 1,2-Dichloropropane | <2.69 E-05 | E |
| 1,3,5-Trimethylbenzene | 3.38 E-05 | D |
| 1,3-Butadiene[k] | 2.67E-04 | D |
| 1,3-Dichloropropene[k] | <2.64 E-05 | E |
| 2-Methylnaphthalene[k] | 3.32 E-05 | C |
| 2,2,4-Trimethylpentane[k] | 2.50 E-04 | C |
| Acenaphthene[k] | 1.25 E-06 | C |



ED_004016Q_00001316-00161

Table 3.2-2. UNCONTROLLED EMISSION FACTORS FOR 4-STROKE LEAN-BURN ENGINES (Continued)

| Pollutant | Emission Factor (lb/MMBtu)[b] (fuel input) | Emission Factor Rating |
|---|---|---|
| Acenaphthylene[k] | 5.53 E-06 | C |
| Acetaldehyde[k,l] | 8.36 E-03 | A |
| Acrolein[k,l] | 5.14 E-03 | A |
| Benzene[k] | 4.40 E-04 | A |
| Benzo(b)fluoranthene[k] | 1.66 E-07 | D |
| Benzo(e)pyrene[k] | 4.15 E-07 | D |
| Benzo(g,h,i)perylene[k] | 4.14 E-07 | D |
| Biphenyl[k] | 2.12 E-04 | D |
| Butane | 5.41 E-04 | D |
| Butyr/Isobutyraldehyde | 1.01 E-04 | C |
| Carbon Tetrachloride[k] | <3.67 E-05 | E |
| Chlorobenzene[k] | <3.04 E-05 | E |
| Chloroethane | 1.87 E-06 | D |
| Chloroform[k] | <2.85 E-05 | E |
| Chrysene[k] | 6.93 E-07 | C |
| Cyclopentane | 2.27 E-04 | C |
| Ethane | 1.05 E-01 | C |
| Ethylbenzene[k] | 3.97 E-05 | B |
| Ethylene Dibromide[k] | <4.43 E-05 | E |
| Fluoranthene[k] | 1.11 E-06 | C |
| Fluorene[k] | 5.67 E-06 | C |
| Formaldehyde[k,l] | 5.28 E-02 | A |
| Methanol[k] | 2.50 E-03 | B |
| Methylcyclohexane | 1.23 E-03 | C |
| Methylene Chloride[k] | 2.00 E-05 | C |
| n-Hexane[k] | 1.11 E-03 | C |
| n-Nonane | 1.10 E-04 | C |



ED_004016Q_00001316-00162

Table 3.2-2. UNCONTROLLED EMISSION FACTORS FOR 4-STROKE LEAN-BURN ENGINES
(Continued)

| Pollutant | Emission Factor (lb/MMBtu)[b] (fuel input) | Emission Factor Rating |
|---|---|---|
| n-Octane | 3.51 E-04 | C |
| n-Pentane | 2.60 E-03 | C |
| Naphthalene[k] | 7.44 E-05 | C |
| PAH[k] | 2.69 E-05 | D |
| Phenanthrene[k] | 1.04 E-05 | D |
| Phenol[k] | 2.40 E-05 | D |
| Propane | 4.19 E-02 | C |
| Pyrene[k] | 1.36 E-06 | C |
| Styrene[k] | <2.36 E-05 | E |
| Tetrachloroethane[k] | 2.48 E-06 | D |
| Toluene[k] | 4.08 E-04 | B |
| Vinyl Chloride[k] | 1.49 E-05 | C |
| Xylene[k] | 1.84 E-04 | B |

[a] Reference 7. Factors represent uncontrolled levels. For $NO_x$, CO, and PM10, "uncontrolled" means no combustion or add-on controls; however, the factor may include turbocharged units. For all other pollutants, "uncontrolled" means no oxidation control; the data set may include units with control techniques used for NOx control, such as PCC and SCR for lean burn engines, and PSC for rich burn engines. Factors are based on large population of engines. Factors are for engines at all loads, except as indicated. SCC = Source Classification Code. TOC = Total Organic Compounds. PM-10 = Particulate Matter ≤ 10 microns ($\mu$m) aerodynamic diameter. A "<" sign in front of a factor means that the corresponding emission factor is based on one-half of the method detection limit.

[b] Emission factors were calculated in units of (lb/MMBtu) based on procedures in EPA Method 19. To convert from (lb/MMBtu) to (lb/$10^6$ scf), multiply by the heat content of the fuel. If the heat content is not available, use 1020 Btu/scf. To convert from (lb/MMBtu) to (lb/hp-hr) use the following equation:

$$\text{lb/hp-hr} = (\text{lb/MMBtu})\ (\text{heat input, MMBtu/hr})\ (1/\text{operating HP, 1/hp})$$

[c] Emission tests with unreported load conditions were not included in the data set.

[d] Based on 99.5% conversion of the fuel carbon to $CO_2$. $CO_2$ [lb/MMBtu] = (3.67)(%CON)(C)(D)(1/h), where %CON = percent conversion of fuel carbon to $CO_2$, C = carbon content of fuel by weight (0.75), D = density of fuel, 4.1 E+04 lb/$10^6$ scf, and



ED_004016Q_00001316-00163

Table 3.2-3. UNCONTROLLED EMISSION FACTORS FOR 4-STROKE RICH-BURN ENGINES[a]
(SCC 2-02-002-53)

| Pollutant | Emission Factor (lb/MMBtu)[b] (fuel input) | Emission Factor Rating |
|---|---|---|
| Criteria Pollutants and Greenhouse Gases | | |
| $NO_x$[c] 90 - 105% Load | 2.21 E+00 | A |
| $NO_x$[c] <90% Load | 2.27 E+00 | C |
| CO[c] 90 - 105% Load | 3.72 E+00 | A |
| CO[c] <90% Load | 3.51 E+00 | C |
| $CO_2$[d] | 1.10 E+02 | A |
| $SO_2$[e] | 5.88 E-04 | A |
| TOC[f] | 3.58 E-01 | C |
| Methane[g] | 2.30 E-01 | C |
| VOC[h] | 2.96 E-02 | C |
| PM10 (filterable)[i,j] | 9.50 E-03 | E |
| PM2.5 (filterable)[j] | 9.50 E-03 | E |
| PM Condensable[k] | 9.91 E-03 | E |
| Trace Organic Compounds | | |
| 1,1,2,2-Tetrachloroethane[l] | 2.53 E-05 | C |
| 1,1,2-Trichloroethane[l] | <1.53 E-05 | E |
| 1,1-Dichloroethane | <1.13 E-05 | E |
| 1,2-Dichloroethane | <1.13 E-05 | E |
| 1,2-Dichloropropane | <1.30 E-05 | E |
| 1,3-Butadiene[l] | 6.63 E-04 | D |
| 1,3-Dichloropropene[l] | <1.27 E-05 | E |
| Acetaldehyde[l,m] | 2.79 E-03 | C |
| Acrolein[l,m] | 2.63 E-03 | C |
| Benzene[l] | 1.58 E-03 | B |
| Butyr/isobutyraldehyde | 4.86 E-05 | D |
| Carbon Tetrachloride[l] | <1.77 E-05 | E |



ED_004016Q_00001316-00164

Table 3.2-3. UNCONTROLLED EMISSION FACTORS FOR 4-STROKE RICH-BURN ENGINES (Concluded)

| Pollutant | Emission Factor (lb/MMBtu)[b] (fuel input) | Emission Factor Rating |
|---|---|---|
| Chlorobenzene[l] | <1.29 E-05 | E |
| Chloroform[l] | <1.37 E-05 | E |
| Ethane[n] | 7.04 E-02 | C |
| Ethylbenzene[l] | <2.48 E-05 | E |
| Ethylene Dibromide[l] | <2.13 E-05 | E |
| Formaldehyde[l,m] | 2.05 E-02 | A |
| Methanol[l] | 3.06 E-03 | D |
| Methylene Chloride[l] | 4.12 E-05 | C |
| Naphthalene[l] | <9.71 E-05 | E |
| PAH[l] | 1.41 E-04 | D |
| Styrene[l] | <1.19 E-05 | E |
| Toluene[l] | 5.58 E-04 | A |
| Vinyl Chloride[l] | <7.18 E-06 | E |
| Xylene[l] | 1.95 E-04 | A |

[a] Reference 7. Factors represent uncontrolled levels. For $NO_X$, CO, and PM-10, "uncontrolled" means no combustion or add-on controls; however, the factor may include turbocharged units. For all other pollutants, "uncontrolled" means no oxidation control; the data set may include units with control techniques used for NOx control, such as PCC and SCR for lean burn engines, and PSC for rich burn engines. Factors are based on large population of engines. Factors are for engines at all loads, except as indicated. SCC = Source Classification Code. TOC = Total Organic Compounds. PM10 = Particulate Matter ≤ 10 microns ($\mu$m) aerodynamic diameter. A "<" sign in front of a factor means that the corresponding emission factor is based on one-half of the method detection limit.

[b] Emission factors were calculated in units of (lb/MMBtu) based on procedures in EPA Method 19. To convert from (lb/MMBtu) to (lb/$10^6$ scf), multiply by the heat content of the fuel. If the heat content is not available, use 1020 Btu/scf. To convert from (lb/MMBtu) to (lb/hp-hr) use the following equation:

$$\text{lb/hp-hr} = (\text{lb/MMBtu})(\text{heat input, MMBtu/hr})(1/\text{operating HP, 1/hp})$$

[c] Emission tests with unreported load conditions were not included in the data set.

[d] Based on 99.5% conversion of the fuel carbon to $CO_2$. $CO_2$ [lb/MMBtu] = (3.67)(%CON)(C)(D)(1/h), where %CON = percent conversion of fuel carbon to $CO_2$,



ED_004016Q_00001316-00165

C = carbon content of fuel by weight (0.75), D = density of fuel, 4.1 E+04 lb/$10^6$ scf, and h = heating value of natural gas (assume 1020 Btu/scf at 60°F).

[e] Based on 100% conversion of fuel sulfur to $SO_2$. Assumes sulfur content in natural gas of 2,000 gr/$10^6$scf.

[f] Emission factor for TOC is based on measured emission levels from 6 source tests.

[g] Emission factor for methane is determined by subtracting the VOC and ethane emission factors from the TOC emission factor.

[h] VOC emission factor is based on the sum of the emission factors for all speciated organic compounds. Methane and ethane emissions were not measured for this engine category.

[i] No data were available for uncontrolled engines. PM10 emissions are for engines equipped with a PCC.

[j] Considered ≤ 1 $\mu$m in aerodynamic diameter. Therefore, for filterable PM emissions, PM10(filterable) = PM2.5(filterable).

[k] No data were available for condensable emissions. The presented emission factor reflects emissions from 4SLB engines.

[l] Hazardous Air Pollutant as defined by Section 112(b) of the Clean Air Act.

[m] For rich-burn engines, no interference is suspected in quantifying aldehyde emissions. The presented emission factors are based on FTIR and CARB 430 emissions data measurements.

[n] Ethane emission factor is determined by subtracting the VOC emission factor from the NMHC emission factor.



ED_004016Q_00001316-00166

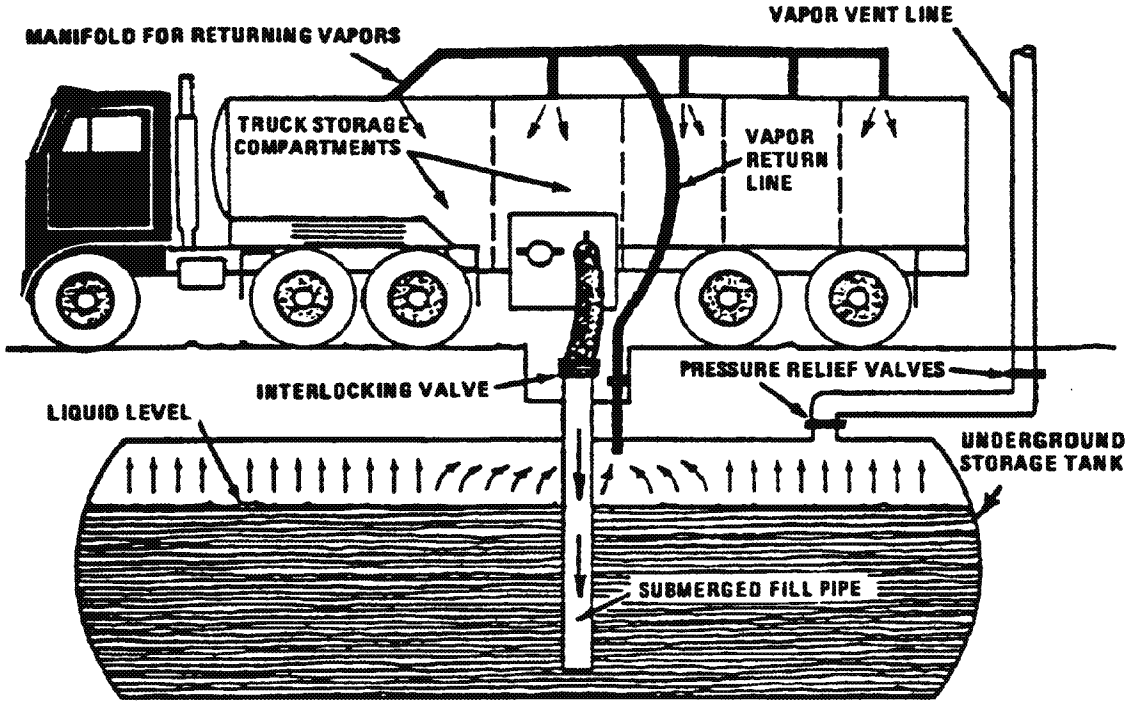


Figure 5.2-5. Tank truck unloading into a service station underground storage tank and practicing "vapor balance" form of emission control.

Table 5.2-1. SATURATION (S) FACTORS FOR CALCULATING PETROLEUM LIQUID LOADING LOSSES

| Cargo Carrier | Mode Of Operation | S Factor |
|---|---|---|
| Tank trucks and rail tank cars | Submerged loading of a clean cargo tank | 0.50 |
| | Submerged loading: dedicated normal service | 0.60 |
| | Submerged loading: dedicated vapor balance service | 1.00 |
| | Splash loading of a clean cargo tank | 1.45 |
| | Splash loading: dedicated normal service | 1.45 |
| | Splash loading: dedicated vapor balance service | 1.00 |
| Marine vessels[a] | Submerged loading: ships | 0.2 |
| | Submerged loading: barges | 0.5 |

[a] For products other than gasoline and crude oil. For marine loading of gasoline, use factors from Table 5.2-2. For marine loading of crude oil, use Equations 2 and 3 and Table 5.2-3.



ED_004016Q_00001316-00167

Table 7.1-2. PROPERTIES ($M_V$, $P_{VA}$, $W_L$) OF SELECTED PETROLEUM LIQUIDS[a]

| Petroleum Liquid | Vapor Molecular Weight at 60°F, $M_V$ (lb/lb-mole) | Liquid Density At 60°F, $W_L$ (lb/gal) | True Vapor Pressure, $P_{VA}$ (psi) | | | | | | |
|---|---|---|---|---|---|---|---|---|---|
| | | | 40°F | 50°F | 60°F | 70°F | 80°F | 90°F | 100°F |
| Crude oil RVP 5 | 50 | 7.1 | 1.8 | 2.3 | 2.8 | 3.4 | 4.0 | 4.8 | 5.7 |
| Distillate fuel oil No. 2 | 130 | 7.1 | 0.0031 | 0.0045 | 0.0065 | 0.0090 | 0.012 | 0.016 | 0.022 |
| Gasoline RVP 7 | 68 | 5.6 | 2.3 | 2.9 | 3.5 | 4.3 | 5.2 | 6.2 | 7.4 |
| Gasoline RVP 7.8 | 68 | 5.6 | 2.5929 | 3.2079 | 3.9363 | 4.793 | 5.7937 | 6.9552 | 8.2952 |
| Gasoline RVP 8.3 | 68 | 5.6 | 2.7888 | 3.444 | 4.2188 | 5.1284 | 6.1891 | 7.4184 | 8.8344 |
| Gasoline RVP 10 | 66 | 5.6 | 3.4 | 4.2 | 5.2 | 6.2 | 7.4 | 8.8 | 10.5 |
| Gasoline RVP 11.5 | 65 | 5.6 | 4.087 | 4.9997 | 6.069 | 7.3132 | 8.7519 | 10.4053 | 12.2949 |
| Gasoline RVP 13 | 62 | 5.6 | 4.7 | 5.7 | 6.9 | 8.3 | 9.9 | 11.7 | 13.8 |
| Gasoline RVP 13.5 | 62 | 5.6 | 4.932 | 6.0054 | 7.2573 | 8.7076 | 10.3774 | 12.2888 | 14.4646 |
| Gasoline RVP 15.0 | 60 | 5.6 | 5.5802 | 6.774 | 8.1621 | 9.7656 | 11.6067 | 13.7085 | 16.0948 |
| Jet kerosene | 130 | 7.0 | 0.0041 | 0.0060 | 0.0085 | 0.011 | 0.015 | 0.021 | 0.029 |
| Jet naphtha (JP-4) | 80 | 6.4 | 0.8 | 1.0 | 1.3 | 1.6 | 1.9 | 2.4 | 2.7 |
| Residual oil No. 6 | 190 | 7.9 | 0.00002 | 0.00003 | 0.00004 | 0.00006 | 0.00009 | 0.00013 | 0.00019 |

[a] References 10 and 11



ED_004016Q_00001316-00168

Table 13.5-1 (English Units). THC, NOx AND SOOT EMISSIONS FACTORS FOR FLARE OPERATIONS[a]

EMISSIONS FACTOR RATING: B

| Pollutant | SCC[d] | Emissions Factor Value | Emissions Factor Units |
|---|---|---|---|
| Total hydrocarbons[b] | 30190099; 30119701; 30119705; 30119709; 30119741 | 0.14 | lb/$10^6$ Btu |
| Nitrogen oxides[c] | | 0.068 | lb/$10^6$ Btu |
| Soot[c] | | 0 - 274 | µg/L |

[a] Reference 1. Based on tests using crude propylene containing 80% propylene and 20% propane.
[b] Measured as methane equivalent. The THC emissions factor may not be appropriate for reporting VOC emissions when a VOC emissions factor exists.
[c] Soot in concentration values: nonsmoking flares, 0 micrograms per liter (µg/L); lightly smoking flares, 40 µg/L; average smoking flares, 177 µg/L; and heavily smoking flares, 274 µg/L.
[d] See Table 13.5-3 for a description of these SCCs.



ED_004016Q_00001316-00169

Table 13.5-2 (English Units). VOC and CO EMISSIONS FACTORS FOR FLARE OPERATIONS[a]

| Pollutant | SCC[d] | Emissions Factor ($lb/10^6$ Btu) | Representativeness |
|---|---|---|---|
| Volatile organic compounds[b] | 30190099; 30600904; 30119701; 30119705; 30119709; 30119741; 30119799; 30130115; 30600201; 30600401; 30600508; 30600903; 30600999; 30601701; 30601801; 30688801; 40600240 | 0.66 | Poorly |
| Carbon monoxide[c] | | 0.31 | Poorly |

[a] These factors apply to well operated flares achieving at least 98% destruction efficiency and operating in compliance with the current General Provisions requirements of 40 CFR Part 60, i.e. >300 btu/scf net heating value in the vent gas and less than the specified maximum flare tip velocity. The VOC emissions factor data set had an average destruction efficiency of 98.9%, and the CO emissions factor data set had an average destruction efficiency of 99.1% (based on test reports where destruction efficiency was provided). These factors are based on steam-assisted and air-assisted flares burning a variety of vent gases.
[b] References 4-9 and 11.
[c] References 1, 4-8 and 11.
[d] See Table 13.5-3 for a description of these SCCs.



ED_004016Q_00001316-00170

The following empirical expressions may be used to estimate the quantity in pounds (lb) of size-specific particulate emissions from an unpaved road, per vehicle mile traveled (VMT):

For vehicles traveling on unpaved surfaces at industrial sites, emissions are estimated from the following equation:

$$E = k\,(s/12)^a (W/3)^b \tag{1a}$$

and, for vehicles traveling on publicly accessible roads, dominated by light duty vehicles, emissions may be estimated from the following:

$$E = \frac{k\,(s/12)^a (S/30)^d}{(M/0.5)^c} - C \tag{1b}$$

where k, a, b, c and d are empirical constants (Reference 6) given below and

E = size-specific emission factor (lb/VMT)
s = surface material silt content (%)
W = mean vehicle weight (tons)
M = surface material moisture content (%)
S = mean vehicle speed (mph)
*C* = emission factor for 1980's vehicle fleet exhaust, brake wear and tire wear.

The source characteristics s, W and M are referred to as correction parameters for adjusting the emission estimates to local conditions. The metric conversion from lb/VMT to grams (g) per vehicle kilometer traveled (VKT) is as follows:

1 lb/VMT = 281.9 g/VKT

The constants for Equations 1a and 1b based on the stated aerodynamic particle sizes are shown in Tables 13.2.2-2 and 13.2.2-4. The PM-2.5 particle size multipliers (k-factors) are taken from Reference 27.



ED_004016Q_00001316-00171

Table 13.2.2-2. CONSTANTS FOR EQUATIONS 1a AND 1b

| Constant | Industrial Roads (Equation 1a) | | | Public Roads (Equation 1b) | | |
|---|---|---|---|---|---|---|
| | PM-2.5 | PM-10 | PM-30* | PM-2.5 | PM-10 | PM-30* |
| k (lb/VMT) | 0.15 | 1.5 | 4.9 | 0.18 | 1.8 | 6.0 |
| a | 0.9 | 0.9 | 0.7 | 1 | 1 | 1 |
| b | 0.45 | 0.45 | 0.45 | - | - | - |
| c | - | - | - | 0.2 | 0.2 | 0.3 |
| d | - | - | - | 0.5 | 0.5 | 0.3 |
| Quality Rating | B | B | B | B | B | B |

*Assumed equivalent to total suspended particulate matter (TSP)
"-" = not used in the emission factor equation

Table 13.2.2-2 also contains the quality ratings for the various size-specific versions of Equation 1a and 1b. The equation retains the assigned quality rating, if applied within the ranges of source conditions, shown in Table 13.2.2-3, that were tested in developing the equation:

Table 13.2.2-3. RANGE OF SOURCE CONDITIONS USED IN DEVELOPING EQUATION 1a AND 1b

| Emission Factor | Surface Silt Content, % | Mean Vehicle Weight | | Mean Vehicle Speed | | Mean No. of Wheels | Surface Moisture Content, % |
|---|---|---|---|---|---|---|---|
| | | Mg | ton | km/hr | mph | | |
| Industrial Roads (Equation 1a) | 1.8-25.2 | 1.8-260 | 2-290 | 8-69 | 5-43 | 4-17[a] | 0.03-13 |
| Public Roads (Equation 1b) | 1.8-35 | 1.4-2.7 | 1.5-3 | 16-88 | 10-55 | 4-4.8 | 0.03-13 |

[a] See discussion in text.

As noted earlier, the models presented as Equations 1a and 1b were developed from tests of traffic on unpaved surfaces. Unpaved roads have a hard, generally nonporous surface that usually dries quickly after a rainfall or watering, because of traffic-enhanced natural evaporation. (Factors influencing how fast a road dries are discussed in Section 13.2.2.3, below.) The quality ratings given above pertain to the mid-range of the measured source conditions for the equation. A higher mean vehicle weight and a higher than normal traffic rate may be justified when performing a worst-case analysis of emissions from unpaved roads.

The emission factors for the exhaust, brake wear and tire wear of a 1980's vehicle fleet ($C$) was obtained from EPA's MOBILE6.2 model [23]. The emission factor also varies with aerodynamic size range



ED_004016Q_00001316-00172

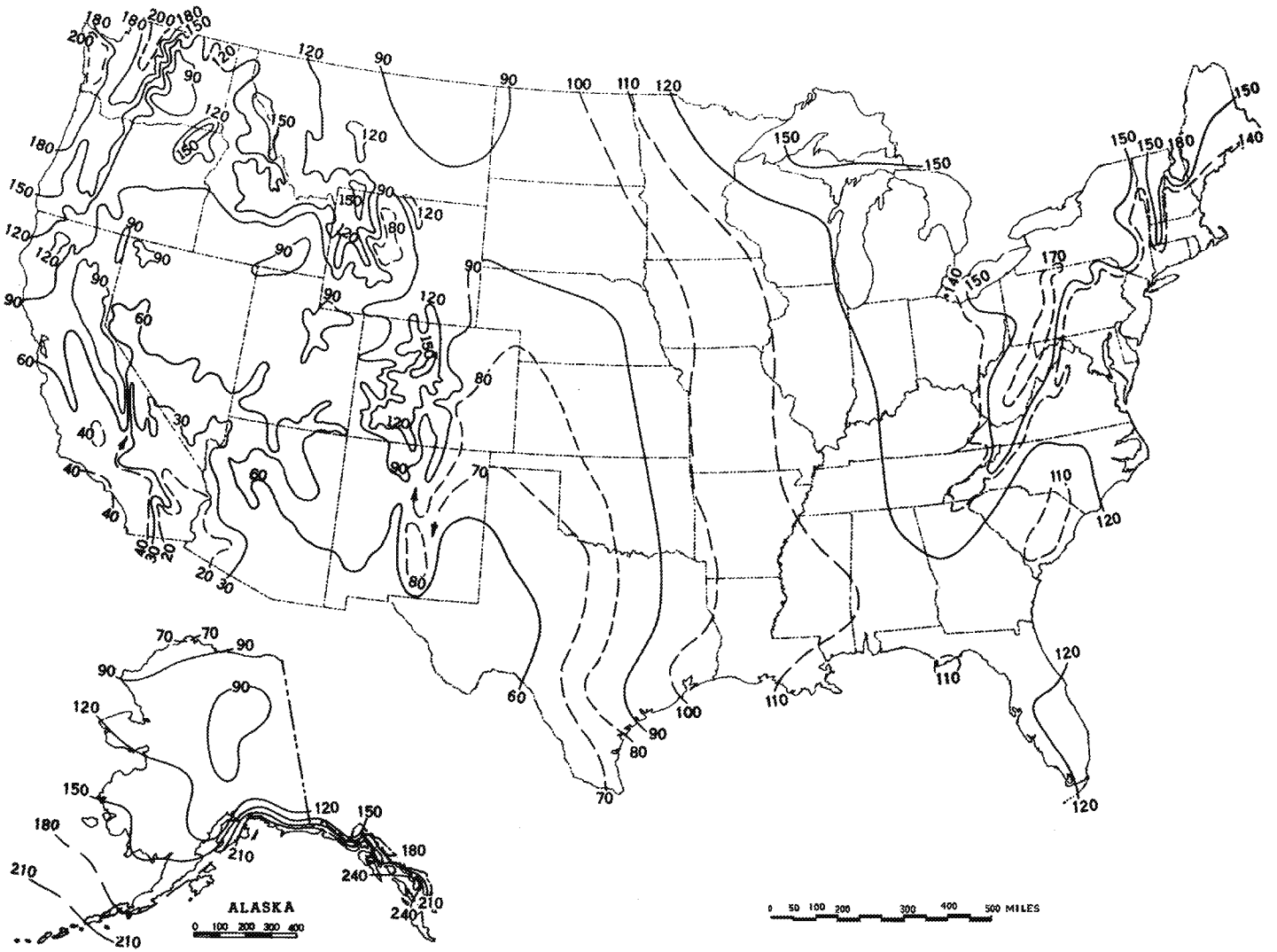


Figure 13.2.2-1. Mean number of days with 0.01 inch or more of precipitation in United States.

and outer diameter greater than or equal to 2.375 inch.

*Tubing systems* means piping equal to or less than one half inch diameter as per nominal pipe size.

*Turbine meter* means a flow meter in which a gas or liquid flow rate through the calibrated tube spins a turbine from which the spin rate is detected and calibrated to measure the fluid flow rate.

*Vented emissions* means intentional or designed releases of $CH_4$ or $CO_2$ containing natural gas or hydrocarbon gas (not including stationary combustion flue gas), including process designed flow to the atmosphere through seals or vent pipes, equipment blowdown for maintenance, and direct venting of gas used to power equipment (such as pneumatic devices).

*Vertical well* means a well bore that is primarily vertical but has some unintentional deviation or one or more intentional deviations to enter one or more subsurface targets that are offset horizontally from the surface location, intercepting the targets either vertically or at an angle.

*Well testing venting and flaring* means venting and/or flaring of natural gas at the time the production rate of a well is determined for regulatory, commercial, or technical purposes. If well testing is conducted immediately after well completion or workover, then it is considered part of well completion or workover.

[75 FR 74488, Nov. 30, 2010, as amended at 76 FR 80590, Dec. 23, 2011]

TABLE W–1A OF SUBPART W—DEFAULT WHOLE GAS EMISSION FACTORS FOR ONSHORE PETROLEUM AND NATURAL GAS PRODUCTION

| Onshore petroleum and natural gas production | Emission factor (scf/hour/component) |
|---|---|
| **Eastern U.S.** | |
| **Population Emission Factors—All Components, Gas Service** [1] | |
| Valve | 0.640 |
| Connector | 0.083 |
| Open-ended Line | 1.46 |
| Pressure Relief Valve | 0.97 |
| Low Continuous Bleed Pneumatic Device Vents [2] | 1.39 |
| High Continuous Bleed Pneumatic Device Vents [2] | 37.3 |
| Intermittent Bleed Pneumatic Device Vents [2] | 13.5 |
| Pneumatic Pumps [3] | 10.3 |
| **Population Emission Factors—All Components, Light Crude Service** [4] | |
| Valve | 0.04 |
| Flange | 0.002 |
| Connector | 0.005 |
| Open-ended Line | 0.04 |
| Pump | 0.01 |
| Other [5] | 0.23 |
| **Population Emission Factors—All Components, Heavy Crude Service** [6] | |
| Valve | 0.0004 |
| Flange | 0.0007 |
| Connector (other) | 0.0002 |
| Open-ended Line | 0.004 |
| Other [5] | 0.002 |
| **Western U.S.** | |
| **Population Emission Factors—All Components, Gas Service** [1] | |
| Valve | 2.903 |
| Connector | 0.396 |
| Open-ended Line | 0.748 |
| Pressure Relief Valve | 4.631 |
| Low Continuous Bleed Pneumatic Device Vents [2] | 1.77 |
| High Continuous Bleed Pneumatic Device Vents [2] | 47.4 |
| Intermittent Bleed Pneumatic Device Vents [2] | 17.1 |
| Pneumatic Pumps [3] | 10.3 |



ED_004016Q_00001316-00174

| Onshore petroleum and natural gas production | Emission factor (scf/hour/component) |
|---|---|
| **Population Emission Factors—All Components, Light Crude Service**[4] | |
| Valve | 0.04 |
| Flange | 0.002 |
| Connector | 0.005 |
| Open-ended Line | 0.04 |
| Pump | 0.01 |
| Other[5] | 0.23 |
| **Population Emission Factors—All Components, Heavy Crude Service**[6] | |
| Valve | 0.0004 |
| Flange | 0.0007 |
| Connector (other) | 0.0002 |
| Open-ended Line | 0.004 |
| Other[5] | 0.002 |

[1] For multi-phase flow that includes gas, use the gas service emissions factors.
[2] Emission Factor is in units of "scf/hour/device."
[3] Emission Factor is in units of "scf/hour/pump."
[4] Hydrocarbon liquids greater than or equal to 20°API are considered "light crude."
[5] "Others" category includes instruments, loading arms, pressure relief valves, stuffing boxes, compressor seals, dump lever arms, and vents.
[6] Hydrocarbon liquids less than 20°API are considered "heavy crude."

[76 FR 80591, Dec. 23, 2011]

## Table W–1B to Subpart W of Part 98—Default Average Component Counts for Major Onshore Natural Gas Production Equipment

| Major equipment | Valves | Connectors | Open-ended lines | Pressure relief valves |
|---|---|---|---|---|
| **Eastern U.S.** | | | | |
| Wellheads | 8 | 38 | 0.5 | 0 |
| Separators | 1 | 6 | 0 | 0 |
| Meters/piping | 12 | 45 | 0 | 0 |
| Compressors | 12 | 57 | 0 | 0 |
| In-line heaters | 14 | 65 | 2 | 1 |
| Dehydrators | 24 | 90 | 2 | 2 |
| **Western U.S.** | | | | |
| Wellheads | 11 | 36 | 1 | 0 |
| Separators | 34 | 106 | 6 | 2 |
| Meters/piping | 14 | 51 | 1 | 1 |
| Compressors | 73 | 179 | 3 | 4 |
| In-line heaters | 14 | 65 | 2 | 1 |
| Dehydrators | 24 | 90 | 2 | 2 |

## Table W–1C to Subpart W of Part 98—Default Average Component Counts For Major Crude Oil Production Equipment

| Major equipment | Valves | Flanges | Connectors | Open-ended lines | Other components |
|---|---|---|---|---|---|
| **Eastern U.S.** | | | | | |
| Wellhead | 5 | 10 | 4 | 0 | 1 |
| Separator | 6 | 12 | 10 | 0 | 0 |
| Heater-treater | 8 | 12 | 20 | 0 | 0 |
| Header | 5 | 10 | 4 | 0 | 0 |
| **Western U.S.** | | | | | |
| Wellhead | 5 | 10 | 4 | 0 | 1 |
| Separator | 6 | 12 | 10 | 0 | 0 |
| Heater-treater | 8 | 12 | 20 | 0 | 0 |
| Header | 5 | 10 | 4 | 0 | 0 |



ED_004016Q_00001316-00175

TABLE W–1D OF SUBPART W OF PART 98—DESIGNATION OF EASTERN AND WESTERN U.S.

| Eastern U.S. | Western U.S. |
|---|---|
| Connecticut | Alabama |
| Delaware | Alaska |
| Florida | Arizona |
| Georgia | Arkansas |
| Illinois | California |
| Indiana | Colorado |
| Kentucky | Hawaii |
| Maine | Idaho |
| Maryland | Iowa |
| Massachusetts | Kansas |
| Michigan | Louisiana |
| New Hampshire | Minnesota |
| New Jersey | Mississippi |
| New York | Missouri |

TABLE W–1D OF SUBPART W OF PART 98—DESIGNATION OF EASTERN AND WESTERN U.S.—Continued

| Eastern U.S. | Western U.S. |
|---|---|
| North Carolina | Montana |
| Ohio | Nebraska |
| Pennsylvania | Nevada |
| Rhode Island | New Mexico |
| South Carolina | North Dakota |
| Tennessee | Oklahoma |
| Vermont | Oregon |
| Virginia | South Dakota |
| West Virginia | Texas |
| Wisconsin | Utah |
| | Washington |
| | Wyoming |

TABLE W–2 OF SUBPART W—DEFAULT TOTAL HYDROCARBON EMISSION FACTORS FOR ONSHORE NATURAL GAS PROCESSING

| Onshore natural gas processing plants | Emission factor (scf/hour/component) |
|---|---|
| **Leaker Emission Factors—Compressor Components, Gas Service** | |
| Valve [1] | 14.84 |
| Connector | 5.59 |
| Open-Ended Line | 17.27 |
| Pressure Relief Valve | 39.66 |
| Meter | 19.33 |
| **Leaker Emission Factors—Non-Compressor Components, Gas Service** | |
| Valve [1] | 6.42 |
| Connector | 5.71 |
| Open-Ended Line | 11.27 |
| Pressure Relief Valve | 2.01 |
| Meter | 2.93 |

[1] Valves include control valves, block valves and regulator valves.

[76 FR 80592, Dec. 23, 2011]

TABLE W–3 OF SUBPART W—DEFAULT TOTAL HYDROCARBON EMISSION FACTORS FOR ONSHORE NATURAL GAS TRANSMISSION COMPRESSION

| Onshore natural gas transmission compression | Emission factor (scf/hour/component) |
|---|---|
| **Leaker Emission Factors—Compressor Components, Gas Service** | |
| Valve [1] | 14.84 |
| Connector | 5.59 |
| Open-Ended Line | 17.27 |
| Pressure Relief Valve | 39.66 |
| Meter | 19.33 |
| **Leaker Emission Factors—Non-Compressor Components, Gas Service** | |
| Valve [1] | 6.42 |
| Connector | 5.71 |
| Open-Ended Line | 11.27 |
| Pressure Relief Valve | 2.01 |
| Meter | 2.93 |
| **Population Emission Factors—Gas Service** | |
| Low Continuous Bleed Pneumatic Device Vents [2] | 1.37 |
| High Continuous Bleed Pneumatic Device Vents [2] | 18.20 |



ED_004016Q_00001316-00176

**New Mexico**
***ENVIRONMENT DEPARTMENT***

505 Camino de los Marquez, Suite 1
Santa Fe, NM 87505
Phone (505) 476-4300
Fax (505) 476-4375
*www.nmenv.state.nm.us*

***SUSANA MARTINEZ***
***GOVERNOR***

***JOHN A. SANCHEZ***
***LIEUTENANT GOVERNOR***

***RYAN FLYNN***
***CABINET SECRETARY***

***BUTCH TONGATE***
***DEPUTY SECRETARY***

# DEPARTMENT ACCEPTED VALUES FOR: AGGREGATE HANDLING, STORAGE PILE, and HAUL ROAD EMISSIONS

TO: Applicants and Air Quality Permitting Staff

THROUGH: Ted Schooley, Permit Section Chief, Air Quality Bureau

FROM: Liz Bisbey-Kuehn, Minor Source Section, Air Quality Bureau

SUBJECT: Department accepted default values for percent silt, wind speed, moisture content, and control efficiencies for haul road control measures

This guidance document provides the Department accepted default values for correction parameters in the emission calculation equations for aggregate handling and storage piles emissions, and submitted under Parts 72 and 73; and the Department accepted control efficiencies for haul road control measures for applications submitted under Part 72.

## Aggregate Handling and Storage Pile Emission Calculations

Applicants should calculate the particulate matter emissions from aggregate handling and storage piles using the EPA's AP-42 Chapter 13.2.4.
http://www3.epa.gov/ttn/chief/ap42/ch13/final/c13s0204.pdf

Equation 1 from Chapter 13.2.4 requires users to input values for two correction parameters, U and M, where U = mean wind speed and M = material moisture content. Below are the accepted values for U and M:

**Default Values for Chapter 13.2.4, Equation 1:**

| Parameter | Default Value |
|---|---|
| U = Mean wind speed (miles per hour) | 11 mph |
| M = Material moisture content (% water) | 2% |

Applicants must receive preapproval from the Department if they wish to assume a higher moisture content in these calculations. Applicants may assume higher wind speeds and lower percent moisture content in their calculations without prior approval from the Department.

**Haul Road Emissions and Control Measure Efficiencies**

Applicants should calculate the particulate matter emissions from unpaved haul roads using the EPA's AP-42 Chapter 13.2.2. http://www3.epa.gov/ttn/chief/ap42/ch13/final/c13s0202.pdf

Equation 1(a) from Chapter 13.2.2 requires users to input values for two correction parameters, s and W, where s = surface material silt content (%) and W = mean vehicle weight (tons). The applicant should calculate the mean vehicle weight in accordance with the chapter's instructions. Below is the accepted value for the parameter s:

**Default Values for Chapter 13.2.2, Equation 1(a):**

| Parameter | Default Value |
|---|---|
| s = surface material silt content (%) | 4.8% |

Applicants may use a higher silt content without prior approval from the Department. Use of a lower silt content requires prior approval from the Department and may require site specific testing in support of the request.

Equation 2 from Chapter 13.2.2 allows users to take credit for the number of days that receive precipitation in excess of 0.01 inches, in the annual emissions calculation, where P = number of days in a year with at least 0.01 inches of precipitation.

**Default Values for Chapter 13.2.2, Equation 2:**

| Parameter | Default Value |
|---|---|
| P = number of days in a year with at least 0.01 inches of precipitation | 70 days |

Applications submitted under Part 72 may request to apply control measures to reduce the particulate matter emissions from facility haul roads. Applications submitted under Part 73 may not consider any emission reduction from control measures in the potential emission rate calculation, as registrations issued under Part 73 are not federally enforceable under the Clean Air Act or the New Mexico Air Quality Control Act. In order for those control measures to be federally enforceable, the controls must be a requirement in an air quality permit.

Below are the Department accepted control efficiencies for various haul road control measures:

**Haul Road Control Measures and Control Efficiency:**

| Control Measure | Control Efficiency |
|---|---|
| None | 0% |
| Base course or watering | 60% |
| Base course and watering | 80% |
| Base course and surfactant | 90% |
| Paved and Swept | 95% |

# Gas Analysis

2030 Afton Place
Farmington, NM 87401
(505) 325-6622

Analysis No: WP130059
Cust No: 85500-10925

## Well/Lease Information

| | | | |
|---|---|---|---|
| Customer Name: | WPX ENERGY PRODUCTION, LLC | Source: | N/A |
| Well Name: | CHACO 2408-32 P #114 H | Pressure: | 154 PSIG |
| County/State: | NM | Sample Temp: | DEG. F |
| Location: | | Well Flowing: | |
| Field: | | Date Sampled: | 05/02/2013 |
| Formation: | | Sampled By: | ART. L. ALSAP |
| Cust. Stn. No.: | 9024 | Foreman/Engr.: | |

Remarks: OPERATOR COD 9024
RUN# 04-50

## Analysis

| Component:: | Mole%: | **GPM: | *BTU: | *SP Gravity: |
|---|---|---|---|---|
| Nitrogen | 16.090 | 1.7760 | 0.00 | 0.1556 |
| CO2 | 0.358 | 0.0610 | 0.00 | 0.0054 |
| Methane | 61.351 | 10.4360 | 619.65 | 0.3398 |
| Ethane | 10.066 | 2.7010 | 178.14 | 0.1045 |
| Propane | 7.243 | 2.0020 | 182.24 | 0.1103 |
| Iso-Butane | 0.849 | 0.2790 | 27.61 | 0.0170 |
| N-Butane | 2.316 | 0.7330 | 75.55 | 0.0465 |
| I-Pentane | 0.487 | 0.1790 | 19.48 | 0.0121 |
| N-Pentane | 0.464 | 0.1690 | 18.60 | 0.0116 |
| Hexane Plus | 0.776 | 0.3470 | 40.90 | 0.0257 |
| Total | 100.000 | 18.6830 | 1162.18 | 0.8286 |

* @ 14.730 PSIA DRY & UNCORRECTED FOR COMPRESSIBILITY

**@ 14.730 PSIA & 60 DEG. F.

COMPRESSIBLITY FACTOR (1/Z): 1.0036

BTU/CU.FT (DRY) CORRECTED FOR (1/Z): 1169.1

BTU/CU.FT (WET) CORRECTED FOR (1/Z): 1148.8

REAL SPECIFIC GRAVITY: 0.8312

**GPM, BTU, and SPG calculations as shown above are based on current GPA factors.**

| | | | |
|---|---|---|---|
| DRY BTU @ 14.650: | 1162.8 | CYLINDER #: | CC#6 |
| DRY BTU @ 14.696: | 1166.4 | CYLINDER PRESSURE: | 140 PSIG |
| DRY BTU @ 14.730: | 1169.1 | DATE RUN: | 5/6/13 2:33 PM |
| DRY BTU @ 15.025: | 1192.5 | ANALYSIS RUN BY: | LOGAN CHENEY |

WPX ENERGY PRODUCTION, LLC

WELL ANALYSIS COMPARISON

| | | | |
|---|---|---|---|
| **Lease:** | CHACO 2408-32 P #114 H | N/A | 05/06/2013 |
| **Stn. No.:** | 9024 | | 85500-10925 |
| **Mtr. No.:** | | | |

| | | | | | | | |
|---|---|---|---|---|---|---|---|
| **Smpl Date:** | 05/02/2013 | 04/29/2013 | 04/25/2013 | 04/16/2013 | 04/15/2013 | 04/05/2013 | 04/04/2013 |
| **Test Date:** | 05/06/2013 | 05/01/2013 | 04/26/2013 | 04/17/2013 | 04/16/2013 | 04/05/2013 | 04/04/2013 |
| **Run No:** | WP130059 | WP130056 | WP130055 | WP130038 | WP130037 | WP130031 | WP130028 |
| **Nitrogen:** | 16.090 | 16.467 | 17.421 | 20.446 | 21.046 | 28.972 | 29.526 |
| **CO2:** | 0.358 | 0.356 | 0.350 | 0.360 | 0.327 | 0.305 | 0.294 |
| **Methane:** | 61.351 | 60.626 | 59.267 | 57.571 | 57.463 | 52.068 | 54.355 |
| **Ethane:** | 10.066 | 10.053 | 9.790 | 9.512 | 9.295 | 8.614 | 8.060 |
| **Propane:** | 7.243 | 7.385 | 7.493 | 7.086 | 7.014 | 6.352 | 5.235 |
| **I-Butane:** | 0.849 | 0.860 | 0.917 | 0.833 | 0.842 | 0.708 | 0.522 |
| **N-Butane:** | 2.316 | 2.342 | 2.523 | 2.258 | 2.273 | 1.828 | 1.308 |
| **I-Pentane:** | 0.487 | 0.571 | 0.630 | 0.542 | 0.536 | 0.383 | 0.244 |
| **N-Pentane:** | 0.464 | 0.572 | 0.636 | 0.537 | 0.526 | 0.357 | 0.223 |
| **Hexane+:** | 0.776 | 0.768 | 0.973 | 0.855 | 0.678 | 0.413 | 0.233 |
| **BTU:** | 1169.1 | 1173.6 | 1181.6 | 1123.5 | 1107.4 | 596.4 | 918.3 |
| **GPM:** | 18.6830 | 18.7150 | 18.7590 | 18.3820 | 18.2660 | 10.6370 | 17.0030 |
| **SPG:** | 0.8312 | 0.8381 | 0.8534 | 0.8485 | 0.8440 | 0.8435 | 0.8122 |

| | | | | | | |
|---|---|---|---|---|---|---|
| 04/04/2013 | 04/01/2013 | 03/29/2013 | 03/27/2013 | 03/26/2013 | 03/25/2013 | 03/25/2013 |
| 04/04/2013 | 04/02/2013 | 04/02/2013 | 03/28/2013 | 03/27/2013 | 03/25/2013 | 03/25/2013 |
| WP130027 | WP130025 | WP130024 | WP130023 | WP130022 | WP130021 | WP130020 |
| 30.332 | 28.878 | 32.582 | 29.843 | 34.384 | 35.063 | 36.608 |
| 0.299 | 0.305 | 0.286 | 0.302 | 0.274 | 0.273 | 0.281 |
| 51.790 | 52.329 | 48.913 | 46.748 | 47.027 | 46.184 | 45.137 |
| 8.558 | 8.640 | 8.383 | 9.823 | 8.193 | 8.144 | 7.921 |
| 6.010 | 6.332 | 6.322 | 8.579 | 6.413 | 6.464 | 6.265 |
| 0.624 | 0.693 | 0.700 | 0.976 | 0.726 | 0.745 | 0.724 |
| 1.551 | 1.757 | 1.774 | 2.427 | 1.863 | 1.923 | 1.877 |
| 0.297 | 0.356 | 0.356 | 0.457 | 0.382 | 0.399 | 0.395 |
| 0.270 | 0.327 | 0.326 | 0.409 | 0.352 | 0.370 | 0.367 |
| 0.269 | 0.383 | 0.358 | 0.436 | 0.386 | 0.435 | 0.425 |
| 938.0 | 973.0 | 932.8 | 1036.0 | 920.0 | 918.4 | 895.7 |
| 17.1710 | 17.3980 | 17.1460 | 17.8970 | 17.0650 | 17.0560 | 16.9050 |
| 0.8336 | 0.8407 | 0.8541 | 0.8915 | 0.8648 | 0.8711 | 0.8731 |

WPX ENERGY PRODUCTION, LLC

WELL ANALYSIS COMPARISON

**Lease:** CHACO 2408-32 P #114 H N/A 05/06/2013

**Stn. No.:** 9024 85500-10925

**Mtr. No.:**

| | | | | |
|---|---|---|---|---|
| 03/18/2013 | 03/17/2013 | 03/17/2013 | 03/15/2013 | 03/14/2013 |
| 03/19/2013 | 03/18/2013 | 03/18/2013 | 03/18/2013 | 03/15/2013 |
| WP130019 | WP130018 | WP130017 | WP130016 | WP130015 |
| 47.018 | 47.341 | 48.189 | 56.124 | 57.418 |
| 0.226 | 0.226 | 0.222 | 0.174 | 0.149 |
| 38.719 | 36.684 | 36.041 | 32.160 | 30.712 |
| 6.347 | 6.294 | 6.219 | 5.195 | 5.000 |
| 4.791 | 5.283 | 5.255 | 3.942 | 3.850 |
| 0.547 | 0.678 | 0.673 | 0.449 | 0.459 |
| 1.422 | 1.890 | 1.864 | 1.172 | 1.235 |
| 0.299 | 0.467 | 0.458 | 0.251 | 0.293 |
| 0.273 | 0.457 | 0.449 | 0.235 | 0.290 |
| 0.358 | 0.680 | 0.630 | 0.298 | 0.594 |
| 733.0 | 774.8 | 761.9 | 606.2 | 607.8 |
| 15.8140 | 16.0920 | 16.0080 | 14.9760 | 14.9820 |
| 0.8784 | 0.9089 | 0.9096 | 0.8930 | 0.9075 |

# Produced Water Analysis

HOUSTON LABORATORIES
8820 INTERCHANGE DRIVE
HOUSTON, TEXAS 77054
PHONE (713) 660-0901

**Certificate of Analysis Number:** 2013040639-001A

**FOR:** WPX Energy
Michael Lane
721 S. Main
Aztec, NM 87410

**CUSTOMER:** WPX Energy
**LOCATION :** Chaco 2408-32P #114H
**SAMPLE POINT:** Separator Water Dump
**REPORT DATE:** 5/7/2013
**SAMPLE DATE:** 04/16/2013 16:00
**SAMPLED BY:**
**MEMO:** Flash gas composition from pressurized water sample.

**TYPE:** SpotLiquid
**REPORT:** GPA 2286M
**CYLINDER:** 37698
**PRESSURE:**
**TEMPERATURE:** 90

| COMPONENT | MOL % | WEIGHT % | GPM's |
|---|---|---|---|
| HELIUM | NIL | NIL | |
| HYDROGEN | NIL | NIL | |
| OXYGEN/ARGON | 2.390 | 3.198 | |
| NITROGEN | 23.026 | 26.967 | |
| METHANE | 54.356 | 36.457 | |
| CARBON DIOXIDE | 4.518 | 8.312 | |
| ETHANE | 9.532 | 11.983 | 2.535 |
| PROPANE | 4.402 | 8.115 | 1.651 |
| I-BUTANE | 0.316 | 0.769 | 0.087 |
| N-BUTANE | 0.909 | 2.208 | 0.230 |
| I-PENTANE | 0.150 | 0.452 | 0.049 |
| N-PENTANE | 0.121 | 0.364 | 0.038 |
| I-HEXANES | 0.038 | 0.125 | 0.014 |
| N-HEXANE | 0.012 | 0.044 | 0.005 |
| BENZENE | 0.025 | 0.080 | 0.007 |
| CYCLOHEXANE | 0.022 | 0.076 | 0.007 |
| I-HEPTANES | 0.037 | 0.143 | 0.015 |
| N-HEPTANE | 0.006 | 0.026 | 0.003 |
| TOLUENE | 0.019 | 0.090 | 0.008 |
| I-OCTANES | 0.034 | 0.141 | 0.014 |
| N-OCTANE | 0.006 | 0.028 | 0.003 |
| *E-BENZENE | 0.002 | 0.008 | 0.001 |
| *m,o,&p-XYLENE | 0.015 | 0.064 | 0.006 |
| I-NONANES | 0.014 | 0.075 | 0.007 |
| N-NONANE | 0.006 | 0.034 | 0.004 |
| I-DECANES | 0.027 | 0.140 | 0.013 |
| N-DECANE | 0.005 | 0.026 | 0.003 |
| I-UNDECANES + | 0.012 | 0.075 | 0.007 |
| TOTALS | 100.000 | 100.000 | 4.706 |

| CALCULATED VALUES | TOTAL | C10+ |
|---|---|---|
| Molecular Weight | 23.918 | 138.890 |
| Relative Density as a Vapor | 0.8274 | 4.807 |
| Compressibility Factor | 0.9975 | N/A |
| HvID/Z (Btu/Ft.3), Dry Basis at 14.65 Psia, 60°F | 893.5 | 7334.7 * |
| HvID/Z (Btu/Ft.3), Saturated at Base at 14.65 Psia, 60°F | 877.9 | 7183.8 * |

* Plus Fractions values are Ideal

HOUSTON LABORATORIES
8820 INTERCHANGE DRIVE
HOUSTON, TEXAS 77054
PHONE (713) 660-0901

**Certificate of Analysis Number:** 2013040639-001A

**FOR:** WPX Energy
Michael Lane
721 S. Main
Aztec, NM 87410

**CUSTOMER:** WPX Energy
**LOCATION :** Chaco 2408-32P #114H
**SAMPLE POINT:** Separator Water Dump
**REPORT DATE:** 5/7/2013
**SAMPLE DATE:** 04/16/2013 16:00
**SAMPLED BY:**
**MEMO:** Flash gas composition from pressurized water sample.

**TYPE:** SpotLiquid
**REPORT:** GPA 2286M
**CYLINDER:** 37698
**PRESSURE:**
**TEMPERATURE:** 90

| COMPONENT | MOL % | WEIGHT % | GPM's |
|---|---|---|---|
| HELIUM | NIL | NIL | |
| HYDROGEN | NIL | NIL | |
| OXYGEN/ARGON | 2.390 | 3.198 | |
| NITROGEN | 23.026 | 26.967 | |
| METHANE | 54.356 | 36.457 | |
| CARBON DIOXIDE | 4.518 | 8.312 | |
| ETHANE | 9.532 | 11.983 | 2.535 |
| PROPANE | 4.402 | 8.115 | 1.651 |
| I-BUTANE | 0.316 | 0.769 | 0.087 |
| N-BUTANE | 0.909 | 2.208 | 0.230 |
| I-PENTANE | 0.150 | 0.452 | 0.049 |
| N-PENTANE | 0.121 | 0.364 | 0.038 |
| HEXANES PLUS | 0.280 | 1.175 | 0.117 |
| TOTALS | 100.000 | 100.000 | 4.706 |

| CALCULATED VALUES | TOTAL | C6+ |
|---|---|---|
| Molecular Weight | 23.918 | 100.301 |
| Relative Density as a Vapor | 0.8274 | 3.477 |
| Compressibility Factor | 0.9975 | N/A |
| HvID/Z (Btu/Ft.3), Dry Basis at 14.65 Psia, 60°F | 893.5 | 5296.5 * |
| HvID/Z (Btu/Ft.3), Saturated at Base at 14.65 Psia, 60°F | 877.9 | 5187.5 * |

* Plus Fractions values are Ideal

Hydrocarbon Laboratory Manager

HOUSTON LABORATORIES
6920 INTERCHANGE DRIVE
HOUSTON, TEXAS 77054
PHONE (713) 660-0901

**Certificate of Analysis Number:** 2013040639-001A

**FOR:** WPX Energy
Michael Lane
721 S. Main
Aztec, NM 87410

**CUSTOMER:** WPX Energy
**LOCATION :** Chaco 2408-32P #114H
**SAMPLE POINT:** Separator Water Dump
**REPORT DATE:** 5/7/2013
**SAMPLE DATE:** 04/16/2013 16:00
**SAMPLED BY:**
**MEMO:** Flash gas composition from pressurized water sample.

**TYPE:** SpotLiquid
**REPORT:** GPA 2286M
**CYLINDER:** 37698
**PRESSURE:**
**TEMPERATURE:** 90

| COMPONENT | MOL % | WEIGHT % | GPM's |
|---|---|---|---|
| HELIUM | NIL | NIL | |
| HYDROGEN | NIL | NIL | |
| OXYGEN/ARGON | 2.390 | 3.198 | |
| NITROGEN | 23.026 | 26.967 | |
| METHANE | 54.356 | 36.457 | |
| CARBON DIOXIDE | 4.518 | 8.312 | |
| ETHANE | 9.532 | 11.983 | 2.535 |
| PROPANE | 4.402 | 8.115 | 1.651 |
| I-BUTANE | 0.316 | 0.769 | 0.087 |
| N-BUTANE | 0.909 | 2.208 | 0.230 |
| I-PENTANE | 0.150 | 0.452 | 0.049 |
| N-PENTANE | 0.121 | 0.364 | 0.038 |
| HEXANES | 0.050 | 0.169 | 0.019 |
| HEPTANES PLUS | 0.230 | 1.006 | 0.098 |
| TOTALS | 100.000 | 100.000 | 4.706 |

| CALCULATED VALUES | TOTAL | C7+ |
|---|---|---|
| Molecular Weight | 23.918 | 103.97 |
| Relative Density as a Vapor | 0.8274 | 3.610 |
| Compressibility Factor | 0.9975 | N/A |
| HvID/Z (Btu/Ft.3), Dry Basis at 14.65 Psia, 60°F | 893.5 | 5459.0 * |
| HvID/Z (Btu/Ft.3), Saturated at Base at 14.65 Psia, 60°F | 877.9 | 5346.7 * |

* Plus Fractions values are Ideal

Hydrocarbon Laboratory Manager

HOUSTON LABORATORIES
8820 INTERCHANGE DRIVE
HOUSTON, TEXAS 77054
PHONE (713) 660-0901

**Certificate of Analysis Number:** 2013040639-001A

**FOR:** WPX Energy
Michael Lane
721 S. Main
Aztec, NM 87410

**CUSTOMER:** WPX Energy
**LOCATION :** Chaco 2408-32P #114H
**SAMPLE POINT:** Separator Water Dump
**REPORT DATE:** 5/3/2013
**SAMPLE DATE:** 04/16/2013 16:00
**SAMPLED BY:**
**MEMO:** Pressurized water sample physically flashed and composition calculated on an air free basis.

**TYPE:** SpotLiquid
**REPORT:** C10+ (GPA Method 2286)
**CYLINDER:** 37698
**PRESSURE:** 140
**TEMPERATURE:** 90

| COMPONENT | MOL % | WEIGHT % | GPM's |
|---|---|---|---|
| HELIUM | NIL | NIL | |
| HYDROGEN | NIL | NIL | |
| OXYGEN/ARGON | NIL | NIL | |
| NITROGEN | 14.489 | 17.487 | |
| METHANE | 62.315 | 43.070 | |
| CARBON DIOXIDE | 5.179 | 9.819 | |
| ETHANE | 10.931 | 14.161 | 2.907 |
| PROPANE | 5.048 | 9.590 | 1.383 |
| I-BUTANE | 0.365 | 0.913 | 0.119 |
| N-BUTANE | 1.041 | 2.607 | 0.326 |
| I-PENTANE | 0.171 | 0.530 | 0.062 |
| N-PENTANE | 0.139 | 0.431 | 0.050 |
| I-HEXANES | 0.042 | 0.149 | 0.016 |
| N-HEXANE | 0.014 | 0.052 | 0.006 |
| BENZENE | 0.028 | 0.094 | 0.008 |
| CYCLOHEXANE | 0.025 | 0.090 | 0.008 |
| I-HEPTANES | 0.042 | 0.169 | 0.017 |
| N-HEPTANE | 0.007 | 0.031 | 0.003 |
| TOLUENE | 0.037 | 0.114 | 0.010 |
| I-OCTANES | 0.037 | 0.168 | 0.016 |
| N-OCTANE | 0.007 | 0.033 | 0.003 |
| *E-BENZENE | 0.002 | 0.010 | 0.001 |
| *m,o,&p-XYLENE | 0.015 | 0.074 | 0.006 |
| I-NONANES | 0.014 | 0.087 | 0.009 |
| N-NONANE | 0.007 | 0.041 | 0.004 |
| I-DECANES | 0.027 | 0.161 | 0.015 |
| N-DECANE | 0.005 | 0.031 | 0.003 |
| I-UNDECANES + | 0.013 | 0.088 | 0.009 |
| TOTALS | 100.000 | 100.000 | 4.980 |

| CALCULATED VALUES | TOTAL | C10+ |
|---|---|---|
| Molecular Weight | 23.211 | 139.152 |
| Relative Density as a Vapor | 0.8063 | 4.7250 |
| Compressibility Factor | 0.9934 | N/A |
| HvID/Z (Btu/Ft.$^3$), Dry Basis at 14.65 Psia, 60°F | 1028.7 | 7345 * |
| HvID/Z (Btu/Ft.$^3$), Saturated at Base at 14.65 Psia, 60°F | 1011.6 | 7194 * |

* Plus Fraction HvID (Btu, Ft.$^3$)

HOUSTON LABORATORIES
8820 INTERCHANGE DRIVE
HOUSTON, TEXAS 77054
PHONE (713) 660-0901

**Certificate of Analysis Number:** **2013040639-001A**

**FOR:** WPX Energy
Michael Lane
721 S. Main
Aztec, NM 87410

**CUSTOMER:** WPX Energy
**LOCATION :** Chaco 2408-32P #114H
**SAMPLE POINT:** Separator Water Dump
**REPORT DATE:** 5/3/2013
**SAMPLE DATE:** 04/16/2013 16:00
**SAMPLED BY:**
**MEMO:** Pressurized water sample physically flashed and composition calculated on an air free basis.

**TYPE:** SpotLiquid
**REPORT:** C10+ (GPA Method 2186)
**CYLINDER:** 37698
**PRESSURE:** 140
**TEMPERATURE:** 90

| COMPONENT | MOL % | WEIGHT % | GPM's |
|---|---|---|---|
| HELIUM | NIL | NIL | |
| HYDROGEN | NIL | NIL | |
| OXYGEN/ARGON | NIL | NIL | |
| NITROGEN | 14.489 | 17.487 | |
| METHANE | 62.315 | 43.070 | |
| CARBON DIOXIDE | 5.179 | 9.819 | |
| ETHANE | 10.931 | 14.161 | 2.907 |
| PROPANE | 5.048 | 9.590 | 1.383 |
| I-BUTANE | 0.366 | 0.913 | 0.119 |
| N-BUTANE | 1.041 | 2.607 | 0.326 |
| I-PENTANE | 0.171 | 0.530 | 0.062 |
| N-PENTANE | 0.139 | 0.431 | 0.050 |
| HEXANES PLUS | 0.322 | 1.392 | 0.134 |
| TOTALS | 100.000 | 100.000 | 4.980 |

| CALCULATED VALUES | TOTAL | C6+ |
|---|---|---|
| Molecular Weight | 23.211 | 100.402 |
| Relative Density as a Vapor | 0.8063 | 3.4762 |
| Compressibility Factor | 0.9934 | N/A |
| HvID/Z (Btu/Ft.$^3$), Dry Basis at 14.65 Psia, 60°F | 1028.7 | 5296 * |
| HvID/Z (Btu/Ft.$^3$), Saturated at Base at 14.65 Psia, 60°F | 1011.6 | 5187 * |

* Plus Fraction HvID (Btu, Ft.$^3$)

Hydrocarbon Laboratory Manager

HOUSTON LABORATORIES
6620 INTERCHANGE DRIVE
HOUSTON, TEXAS 77054
PHONE (713) 660-0901

**Certificate of Analysis Number: 2013040639-001A**

**FOR:** WPX Energy
Michael Lane
721 S. Main
Aztec, NM 87410

**CUSTOMER:** WPX Energy
**LOCATION :** Chaco 2408-32P #114H
**SAMPLE POINT:** Separator Water Dump
**REPORT DATE:** 5/3/2013
**SAMPLE DATE:** 04/16/2013 16:00
**SAMPLED BY:**
**MEMO:** Pressurized water sample physically flashed and composition calculated on an air free basis.

**TYPE:** SpotLiquid
**REPORT:** C10+ (GPA Method 2186)
**CYLINDER:** 37698
**PRESSURE:** 140
**TEMPERATURE:** 90

| COMPONENT | MOL % | WEIGHT % | LV % |
|---|---|---|---|
| HELIUM | NIL | NIL | |
| HYDROGEN | NIL | NIL | |
| OXYGEN/ARGON | NIL | NIL | |
| NITROGEN | 14.489 | 17.487 | |
| METHANE | 62.315 | 43.070 | |
| CARBON DIOXIDE | 5.179 | 9.819 | |
| ETHANE | 10.931 | 14.161 | 2.907 |
| PROPANE | 5.048 | 9.590 | 1.383 |
| I-BUTANE | 0.365 | 0.913 | 0.119 |
| N-BUTANE | 1.041 | 2.607 | 0.326 |
| I-PENTANE | 0.171 | 0.530 | 0.062 |
| N-PENTANE | 0.139 | 0.431 | 0.050 |
| HEXANES | 0.056 | 0.201 | 0.022 |
| HEPTANES PLUS | 0.266 | 1.191 | 0.112 |
| TOTALS | 100.000 | 100.000 | 4.980 |

| CALCULATED VALUES | TOTAL | C7+ |
|---|---|---|
| Molecular Weight | 23.211 | 104.074 |
| Relative Density as a Vapor | 0.8063 | 3.6089 |
| Compressibility Factor | 0.9934 | N/A |
| HvID/Z (Btu/Ft.$^3$), Dry Basis at 14.65 Psia, 60°F | 1028.7 | 5458 * |
| HvID/Z (Btu/Ft.$^3$), Saturated at Base at 14.65 Psia, 60°F | 1011.6 | 5346 * |

* Plus Fraction HvID (Btu, Ft.$^3$)

Hydrocarbon Laboratory Manager

HOUSTON LABORATORIES
8620 INTERCHANGE DRIVE
HOUSTON, TEXAS 77054
PHONE (713) 660-0901

# CERTIFICATE OF ANALYSIS

**Certificate of Analysis Number:** 2013040639-001A

**FOR:** Michael Lane
WPX Energy
721 S. Main

Aztec, NM 87410

| | | | |
|---|---|---|---|
| **CUSTOMER:** | Michael Lane | **TYPE:** | SpotLiquid |
| **FIELD :** | Aztec, NM. | **REPORT:** | Flash Report |
| **LOCATION :** | Chaco 2408-32P #114H | **CYLINDER:** | 37698 |
| **SAMPLE POINT:** | Separator Water Dump | **PRESSURE:** | 140 |
| **REPORT DATE:** | 5/3/2013 | **TEMPERATURE:** | 90 |
| **SAMPLE DATE:** | 04/16/2013 16:00 | | |
| **SAMPLED BY:** | | | |

**Comments:** Pressurized water sample physically flashed and composition calculated.

## Analytical Data

| Parameters | Results | Units | Lab Tech. | Date Analyzed |
|---|---|---|---|---|
| Flash Factor | 25.02 | $Ft^3$ / bbl | GM / CS | 5/3/2013 |
| Flash Factor (Air Free) | 22.81 | $Ft^3$ / bbl | GM / CS | 5/3/2013 |

Hydrocarbon Laboratory Manager

# Oil Analysis

**LAFAYETTE AREA LABORATORY**
4790 N.E. EVANGELINE THRUWAY
CARENCRO, LA 70520
PHONE (337) 896-3055
FAX (337) 896-3077

# Certificate of Analysis : 13090068-002A

| | | | |
|---|---|---|---|
| **Company:** | WPX Energy | **For:** | WPX Energy |
| **Well:** | Chaco 147H | | Michael Lane |
| **Field:** | Aztec, NM | | 721 S. Main |
| **Sample of:** | Liquid-Spot | | |
| **Conditions:** | 70 psi @ N.G.° F | | Aztec, NM, 87410 |
| **Sampled by:** | ML-WPX | | |
| **Sample date:** | 8/29/2013 | **Report Date:** | 9/19/2013 |
| **Remarks:** | Cylinder No.: 4925 | | |
| **Remarks:** | | | |

| **Analysis:** ( *GPA 2186M* ) | **Mol. %** | **MW** | **Wt. %** | **Sp. Gravity** | **L.V. %** |
|---|---|---|---|---|---|
| **Nitrogen** | 0.000 | 28.013 | 0.000 | 0.8094 | 0.000 |
| **Methane** | 1.046 | 16.043 | 0.096 | 0.3000 | 0.260 |
| **Carbon Dioxide** | 0.000 | 44.010 | 0.000 | 0.8180 | 0.000 |
| **Ethane** | 1.178 | 30.070 | 0.203 | 0.3562 | 0.462 |
| **Propane** | 4.473 | 44.097 | 1.132 | 0.5070 | 1.807 |
| **Iso-butane** | 1.398 | 58.123 | 0.466 | 0.5629 | 0.671 |
| **N-butane** | 5.587 | 58.123 | 1.864 | 0.5840 | 2.584 |
| **Iso-pentane** | 3.189 | 72.150 | 1.320 | 0.6244 | 1.712 |
| **N-pentane** | 3.956 | 72.150 | 1.638 | 0.6311 | 2.102 |
| **i-Hexanes** | 2.366 | 86.177 | 1.144 | 0.6795 | 1.391 |
| **n-Hexane** | 2.094 | 85.152 | 1.035 | 0.6640 | 1.252 |
| **2,2,4 trimethylpentane** | 0.055 | 114.231 | 0.036 | 0.6967 | 0.043 |
| **Benzene** | 0.283 | 78.114 | 0.283 | 0.8846 | 0.117 |
| **Heptanes** | 8.906 | 94.041 | 4.670 | 0.7260 | 5.405 |
| **Toluene** | 0.828 | 92.141 | 0.973 | 0.8719 | 0.409 |
| **Octanes** | 9.186 | 106.465 | 5.145 | 0.7531 | 6.171 |
| **E-benzene** | 0.266 | 106.167 | 0.070 | 0.8718 | 0.151 |
| **M-,O-,P-xylene** | 1.172 | 106.167 | 0.714 | 0.8731 | 0.668 |
| **Nonanes** | 5.418 | 122.034 | 4.017 | 0.7668 | 4.252 |
| **Decanes Plus** | 48.599 | 269.612 | 75.194 | 0.8633 | 70.543 |
| | 100.000 | | 100.000 | | 100.000 |

| **Calculated Values** | **Total Sample** | **Decanes Plus** |
|---|---|---|
| **Specific Gravity at 60 °F** | 0.8099 | 0.8633 |
| **Api Gravity at 60 °F** | 43.208 | 32.400 |
| **Molecular Weight** | 174.257 | 269.612 |
| **Pounds per Gallon (in Vacuum)** | 6.753 | 7.198 |
| **Pounds per Gallon (in Air)** | 6.745 | 7.190 |
| **Cu. Ft. Vapor per Gallon @ 15.025 psia** | 15.035 | 9.909 |

Brian Hazard

**Southern Petroleum Laboratories, Inc.**

LAFAYETTE AREA LABORATORY
4790 N.E. EVANGELINE THRUWAY
CARENCRO, LA 70520
PHONE (337) 896-3055
FAX (337) 896-3077

# Certificate of Analysis : 13090068-002A

| | | | |
|---|---|---|---|
| **Company:** | WPX Energy | **For:** | WPX Energy |
| **Well:** | Chaco 147H | | Michael Lane |
| **Field:** | Aztec, NM | | 721 S. Main |
| **Sample of:** | Liquid-Spot | | |
| **Conditions:** | 70 psi @ N.G.° F | | Aztec, NM, 87410 |
| **Sampled by:** | ML-WPX | | |
| **Sample date:** | 8/29/2013 | **Report Date:** | 9/19/2013 |
| **Remarks:** | Cylinder No.: 4925 | | |
| **Remarks:** | | | |

| **Analysis:** ( *GPA 2103M* ) | **Mol. %** | **MW** | **Wt. %** | **Sp. Gravity** | **L.V. %** |
|---|---|---|---|---|---|
| **Nitrogen** | 0.000 | 28.013 | 0.000 | 0.8094 | 0.000 |
| **Methane** | 1.046 | 16.043 | 0.096 | 0.3000 | 0.260 |
| **Carbon Dioxide** | 0.000 | 44.010 | 0.000 | 0.8180 | 0.000 |
| **Ethane** | 1.178 | 30.070 | 0.203 | 0.3562 | 0.462 |
| **Propane** | 4.473 | 44.097 | 1.132 | 0.5070 | 1.807 |
| **Iso-butane** | 1.398 | 58.123 | 0.466 | 0.5629 | 0.671 |
| **N-butane** | 5.587 | 58.123 | 1.864 | 0.5840 | 2.584 |
| **Iso-pentane** | 3.189 | 72.150 | 1.320 | 0.6244 | 1.712 |
| **N-pentane** | 3.956 | 72.150 | 1.638 | 0.6311 | 2.102 |
| **Hexanes** | 4.460 | 85.152 | 2.179 | 0.6679 | 2.643 |
| **Heptanes Plus** | 74.713 | 94.041 | 91.102 | 0.7260 | 87.759 |
| | 100.000 | | 100.000 | | 100.000 |

| **Calculated Values** | **Total Sample** | **Heptanes Plus** |
|---|---|---|
| **Specific Gravity at 60 °F** | 0.8099 | 0.8433 |
| **Api Gravity at 60 °F** | 43.208 | 36.289 |
| **Molecular Weight** | 174.257 | 212.480 |
| **Pounds per Gallon (in Vacuum)** | 6.753 | 7.031 |
| **Pounds per Gallon (in Air)** | 6.745 | 7.024 |
| **Cu. Ft. Vapor per Gallon @ 15.025 psia** | 15.035 | 12.839 |
| **Standing-Katz Density (lb. / ft$^3$)** | | |

Brian Lassard

**Southern Petroleum Laboratories, Inc.**

# Certificate of Analysis

Number: 2030-13090068-002A

**Carencro Laboratory**
4790 NE Evangeline Thruway
Carencro, LA 70520

Michael Lane
WPX Energy
721 S. Main
Aztec, NM 87410

Sep. 19, 2013

Field: Aztec, NM
Station Name: Chaco 147H
Sample Point: Low Press Separator
Cylinder No: 4925

Sampled By: ML-WPX
Sample Of: Liquid Spot
Sample Date: 08/29/2013 14:04
Sample Conditions: 70 psig
PO/Ref. No: Route Code: MM332295

## Analytical Data

| Test | Method | Result | Units | Detection Limit | Lab Tech. | Analysis Date |
|---|---|---|---|---|---|---|
| Color Visual | Proprietary | CRUDE | | | AR | 09/12/2013 |
| API Gravity @ 60° F | ASTM D-5002 | 41.45 | ° | | AR | 09/12/2013 |
| Specific Gravity @ 60/60° F | ASTM D-5002 | 0.8181 | | | AR | 09/12/2013 |
| Density @ 60° F | ASTM D-5002 | 0.8173 | g/ml | | AR | 09/12/2013 |
| Shrinkage Factor | Proprietary | 0.9690 | | | AR | 09/12/2013 |
| Flash Factor | Proprietary | 18.2181 | Cu. Ft./S.T. Bbl | | AR | 09/12/2013 |

Hydrocarbon Laboratory Manager

Quality Assurance: The above analyses are performed in accordance with ASTM, UOP, GPA guidelines for quality assurance, unless otherwise stated.

LAFAYETTE AREA LABORATORY
4790 N.E. EVANGELINE THRUWAY
CARENCRO, LA 70520
PHONE (337) 896-3055
FAX (337) 896-3077

# CERTIFICATE OF ANALYSIS
## Certificate of Analysis: 13090068-002A

**Customer:** WPX Energy
**Attn:** Michael K. Lane, PE
721 S. Main
Aztec, NM 87410

**Report Date:** 09/19/13
**PO / Ref. No.:**

**Company:** WPX Energy
**Field:** Chaco 147H
**Station:** L.P. Separator
**Station No:**
**Sample Point:**
**Comments:** EOS Flash Gas Composition

**Sample Of:** Flash Gas
**Sample Date/Time:** 08/29/13
**Sample Psig & Temp:** 70 psi @ 150 °F
**Sampled By:** ML-WPX
**Cylinder # :** 4925

| | MOL % | WEIGHT % | GPM's @ |
|---|---|---|---|
| NITROGEN | | | |
| CO2 | | | |
| METHANE | 36.091 | 16.546 | |
| ETHANE | 19.340 | 16.619 | 7.416 |
| PROPANE | 25.752 | 32.451 | 9.585 |
| I-BUTANE | 3.461 | 5.748 | 1.084 |
| N-BUTANE | 9.960 | 16.543 | 3.237 |
| I-PENTANE | 2.114 | 4.358 | 0.592 |
| N-PENTANE | 2.006 | 4.136 | 0.568 |
| HEXANES | 0.625 | 1.511 | 0.156 |
| BENZENE | 0.044 | 0.097 | 0.016 |
| HEPTANES | 0.372 | 1.027 | 0.083 |
| TOLUENE | 0.034 | 0.089 | 0.010 |
| OCTANES | 0.117 | 0.375 | 0.023 |
| E-BENZENE | 0.003 | 0.010 | 0.001 |
| m,o,&p-XYLENE | 0.011 | 0.035 | 0.003 |
| NONANES | 0.021 | 0.077 | 0.004 |
| DECANES PLUS | 0.049 | 0.378 | 0.008 |
| TOTALS | 100.000 | 100.000 | 22.786 |

**CALCULATED VALUES**

| | |
|---|---|
| REAL DRY BTU AT 15.025 PSIA, 60 DEG.F | 2047.4 |
| REAL WET BTU AT 15.025 PSIA, 60 DEG.F | 2012.4 |
| RELATIVE DENSITY | 1.2206 |
| COMPRESSIBILITY FACTOR | 0.98855 |

| | C2+ | C5+ |
|---|---|---|
| GPM's @ 15.025 psia, 60 Deg.F | 22.786 | 1.464 |

# Section 7

## Map(s)

---

**A map** such as a 7.5 minute topographic quadrangle showing the exact location of the source. The map shall also include the following:

| | |
|---|---|
| The UTM or Longitudinal coordinate system on both axes | An indicator showing which direction is north |
| A minimum radius around the plant of 0.8km (0.5 miles) | Access and haul roads |
| Topographic features of the area | Facility property boundaries |
| The name of the map | The area which will be restricted to public access |
| A graphical scale | |

In addition, please provide a satellite map using the most recent aerial photograph from Google Earth. Using the pin function, pin the existing facility or the location of the proposed facility. The pin should state the facility name.

---

A topographic map and aerial photo are provided on the following pages.



ED_004016Q_00001316-00196

# WPX ENERGY PRODUCTION, LLC W ESCAVADA UT #305H

497' FSL & 220' FWL, SECTION 17, T22N, R7W, N.M.P.M.
SANDOVAL COUNTY, NEW MEXICO

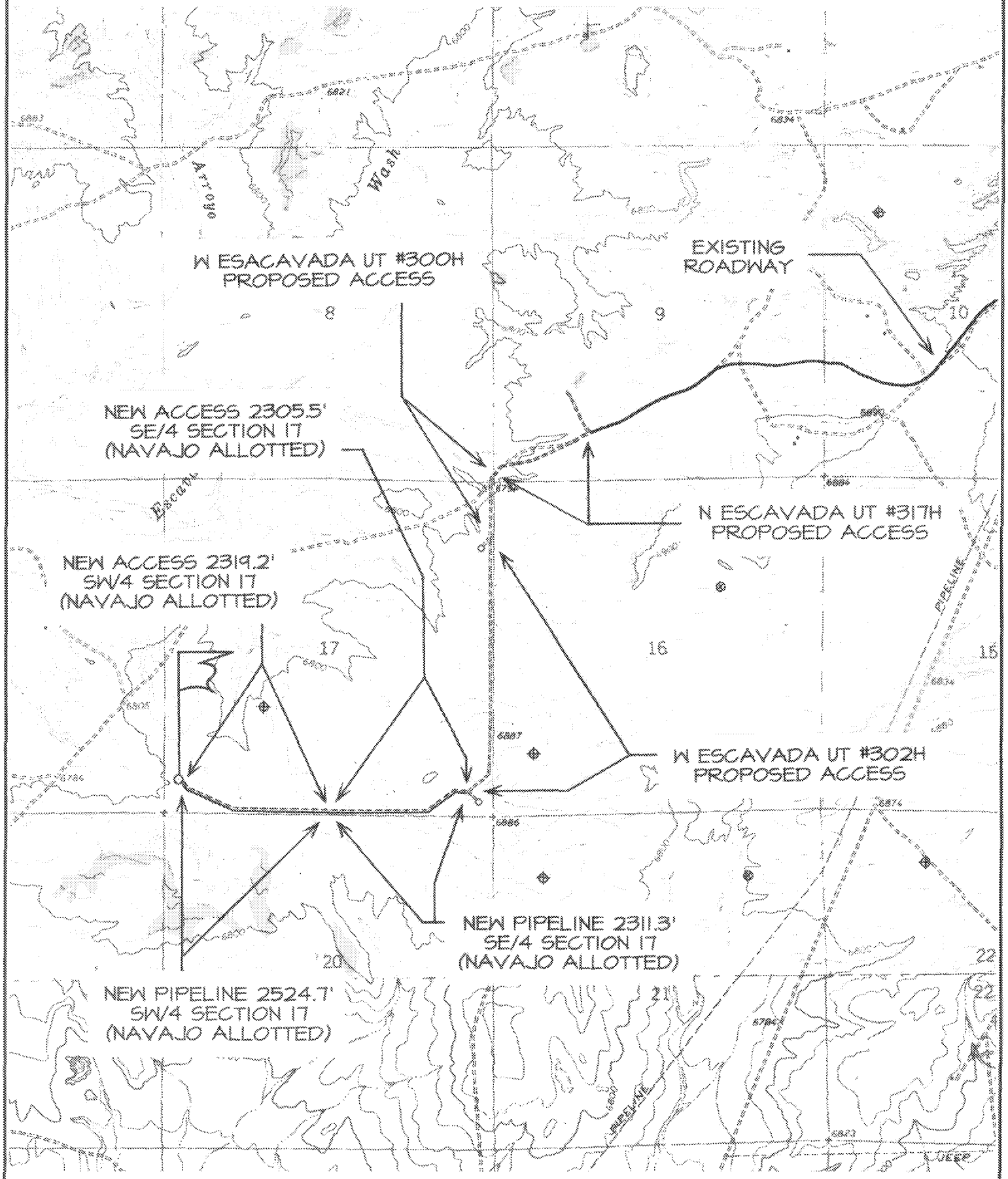


NAME OF TOPO MAP : LYBROOK ⊕ PRODUCING WELL ⊗ PLUGGED & ABANDONED WELL

36.143847, -107.589762
© 2017 Google
Google Earth

# Section 8

## Applicable State & Federal Regulations

**Provide a discussion demonstrating compliance with applicable state & federal regulation**. All input cells should be filled in, even if the response is 'No' or 'N/A'.

In the "Justification" column, identify the criteria that are critical to the applicability determination, numbering each. For each unit listed in the "Applies to Unit No(s)" column, after each listed unit, include the lowest level citation of the applicable regulation. For each unit, list the information necessary to verify the applicability of the regulation, including date of manufacture, date of construction, size (hp), and combustion type. Doing so will provide the applicability criteria for each unit.

To save paper and to standardize the application format, delete this sentence, and begin your submittal for this attachment on this page.

### Example of a Table for Applicable STATE REGULATIONS:

| STATE REGU-LATIONS CITATION | Title | Applies to Entire Facility | Applies to Unit No(s). | Federally Enforce-able | Does Not Apply | JUSTIFICATION: Identify the applicability criteria, numbering each (i.e. 1. Post 7/23/84, 2. 75 $m^3$, 3. VOL) |
|---|---|---|---|---|---|---|
| 20.2.38 NMAC | Hydrocarbon Storage Facil. | | TK 1-15, PWTK 1-2 | No | | Hydrocarbon storage capacity of facility (new tank battery) exceeds 65,000 gallons. 20.2.38.112 applies.<br><br>The rule requires the hydrocarbon liquid storage vessels must be equipped with: A floating roof, consisting of an external floating roof, internal floating cover or covered floating roof, which is equipped with a closure seal or seals; a well maintained vapor-recovery and disposal system as described in the rule; or any other device which is at least as effective to minimize vapor or gas loss to the atmosphere.<br><br>The tanks will be manifolded to a vapor recovery unit (VRU) to meet the requirements of this regulation. |
| 20.2.61.109 NMAC | Smoke & Visible Emissions | | ENG 1-5, HT 1-5, GEN 1-12, FL 1-2 | No | | Engines, heaters, turbines, and flares are Stationary Combustion Equipment. |
| 20.2.73 NMAC | NOI & Emissions Inventory Requirements | X | | No | | **NOI:** 20.2.73.200 NMAC applies (requiring a NOI application)<br>**Emissions Inventory Reporting:** 20.2.73.300 NMAC applies. All Title V major sources meet the applicability requirements of 20.2.73.300 NMAC. |
| 20.2.77 NMAC | New Source Performance | | ENG 1-5, FUG-1 | No | | ENG 1-5 are engines subject to NSPS Subpart JJJJ.<br>FUG-1 may be subject to NSPS Subpart OOOOa. |
| 20.2.78 NMAC | Emission Standards for HAPS | | | | X | This facility DOES NOT emit hazardous air pollutants which are subject to the requirements of 40 CFR Part 61, as amended through December 31, 2010. |
| 20.2.82 NMAC | MACT Standards for source categories of HAPS | | | No | X | Applies if other MACT subpart applies. The MACT Subpart ZZZZ applies as discussed below. |



ED_004016Q_00001316-00199

## Example of a Table for Applicable FEDERAL REGULATIONS (Note: This in not an exhaustive list):

| FEDERAL REGU-LATIONS CITATION | Title | Applies to Entire Facility | Applies to Unit No(s). | Federally Enforce-able | Does Not Apply | JUSTIFICATION: |
|---|---|---|---|---|---|---|
| 40 CFR 50 | NAAQS | Yes | | Yes | | Defined as applicable at 20.2.70.7.E.11, Any national ambient air quality standard |
| NSPS 40 CFR 60, Subpart A | General Provisions | | ENG 1-5, FUG-1 | Yes | | ENG 1-5 are engines subject to NSPS Subpart JJJJ.<br>FUG-1 may be subject to NSPS Subpart OOOOa. |
| NSPS 40 CFR Part 60 Subpart OOOO | Standards of Performance for Crude Oil and Natural Gas Production, Transmission, and Distribution | | | | X | The facility is NOT subject to the provisions of NSPS Subpart OOOO because the facility shall be constructed after September 18, 2015. |
| NSPS 40 CFR Part 60 Subpart OOOOa | Standards of Performance for Crude Oil and Natural Gas Facilities for which Construction, Modification or Reconstruction Commenced After September 18, 2015 | | Oil Well Completi ons, FUG-1 | Yes | | The facility IS subject to the provisions of NSPS Subpart OOOOa listed below because:<br>- The fugitive emission components are subject to the monitoring requirements under this regulation.<br>- Oil well Reduced Emission Completions (REC's) after November 30, 2016.<br>The facility is NOT subject to the provisions of NSPS Subpart OOOOa listed below because:<br>- The compressors at this site are co-located with the wellhead, so the compressor requirements are not applicable.<br>- There are no gas-fired, continuous high bleed pneumatic controllers at this site, so the pneumatic controller requirements are not applicable.<br>- There are no gas-fired, pneumatic pumps at this site, so the pneumatic pump requirements are not applicable.<br>- The oil tanks and produced water tank emit less than 6 tpy VOC per tank, therefore the storage vessel requirements are not applicable.<br>VRT 1-2 are vapor recovery tanks rather than storage vessels per the definitions in §60.5430. Therefore, the storage vessel requirements are not applicable. |
| NSPS 40 CFR Part 60 Subpart IIII | | | | | X | There are no engines subject to NSPS Subpart IIII at this facility. |
| NSPS 40 CFR Part 60 Subpart JJJJ | | | ENG 1-5 | Yes | | See 40 CFR 60.4230(a), 1 through 5 to determine applicable category and state engine size, fuel type, and date of manufacture.<br>ENG 1-5 are engines subject to this Subpart.<br>☒ **Table 1 to Subpart JJJJ is attached with emission standards applicable to each engine highlighted.** |
| MACT 40 CFR 63, Subpart A | General Provisions | | | | X | Applies if other MACT subpart applies. The MACT Subpart ZZZZ applies as discussed below. |
| MACT 40 CFR 63 Subpart ZZZZ | National Emissions Standards for Hazardous Air Pollutants for Stationary Reciprocating | | | | X | Facilities are subject to this subpart if they own or operate a stationary RICE, except if the stationary RICE is being tested at a stationary RICE test cell/stand.<br>☐ **Table 1, 2, 3, 4, 5, 6, and/or 7 to Subpart ZZZZ is attached with emission standards/requirements applicable to each engine highlighted.** |



ED_004016Q_00001316-00200

| FEDERAL REGU-LATIONS CITATION | Title | Applies to Entire Facility | Applies to Unit No(s). | Federally Enforce-able | Does Not Apply | JUSTIFICATION: |
|---|---|---|---|---|---|---|
| | Internal Combustion Engines (**RICE MACT**) | | | | | The facility is an **area** source of HAP, as defined under the regulation.<br>Under §63.6590(a)(2)(iii) and (a)(3)(iii), a RICE located at an area source of HAP is a *new* or *reconstructed* unit if it is constructed or reconstructed on or after June 12, 2006. Under §63.6590(c)(1), a *new* or *reconstructed* SI RICE at an area source of HAP must meet the requirements of the part by meeting the requirements of 40 CFR 60, Subpart JJJJ (NSPS for Stationary Spark Ignition Internal Combustion Engines). |



ED_004016Q_00001316-00201

# Section 9: Certification

Company Name: WPX Energy Production, LLC

I, Nica Hoshijo, hereby certify that the information and data submitted in this application are true and as accurate as possible, to the best of my knowledge and professional expertise and experience.

Signed this 30 day of November, 2017, upon my oath or affirmation, before a notary of the State of

Colorado.

*Signature

Date 11/30/17

Nica Hoshijo
Printed Name

Staff Environmental Specialist
Title

Scribed and sworn before me on this 30 day of November, 2017.

My authorization as a notary of the State of Colorado expires on the

9th day of September, 2020.

Notary's Signature

Date 11/30/2017

JANINE MARTINEZ
Notary's Printed Name

JANINE MARTINEZ
NOTARY PUBLIC
STATE OF COLORADO
NOTARY ID 20164034882
MY COMMISSION EXPIRES SEPT 9 2020



ED_004016Q_00001316-00202