1755 Arroyo Drive
Bloomfield, NM 87413
(505) 632-4700
Fax (505) 632-4782

Via Email

March 15, 2018
Erica LeDoux
Environmental Engineer
U.S. EPA - Region 6
Multimedia Division Air Permits Section 6MM-AP
1445 Ross Avenue
Dallas, TX 75202-2733

RE: 40 CFR 49.151 True Minor Source Permit in Indian Country
Williams Four Corners LLC's Ojito Compressor Station

Dear Ms. LeDoux:

In accordance with 40 CFR 49.151, *Federal Minor New Source Review Program in Indian Country*, Williams Four Corners LLC (Williams) is pleased to submit the attached registration, Part 2, in accordance with the *Federal Implementation Plan (FIP) for True Minor Sources in Indian Country in the Oil and Natural Gas Production and Natural Gas Processing segments of the Oil and Natural Gas Sector.*

With the submittal of this Part 2 of the FIP registration, Williams formally requests withdrawal of the current Part 71 Title V permit renewal application.

Please contact me at (505) 632-4708 or at Mitch.Morris@williams.com should you have any questions regarding this submittal.

Respectfully submitted,

Mitch Morris
Environmental Specialist

Xc: Bonnie Braganza, U.S. EPA Region 6

EPA Form No. 5900-391
EPA ICR No. 1230.27
OMB Control No. 2060-0003
Approval expires 4/30/2017

United States Environmental Protection Agency
https://www.epa.gov/tribal-air/tribal-minor-new-source-review
January 4, 2017

Part 2: Submit Within 60 Days After Startup of Production -- Emission and Production Information

FEDERAL IMPLEMENTATION PLAN FOR TRUE MINOR SOURCES IN INDIAN COUNTRY IN THE OIL AND NATURAL GAS PRODUCTION AND NATURAL GAS PROCESSING SEGMENTS OF THE OIL AND NATURAL GAS SECTOR
Registration for New True Minor Oil and Natural Gas Sources and Minor Modifications at Existing True Minor Oil and Natural Gas Sources

Please submit information to:

[Reviewing Authority Address Phone]	Erica LeBoux Environmental Engineer U.S. EPA - Region 6 Multimedia Division Air Permits Section 6MM-AP 1445 Ross Avenue Dallas, TX 75202-2733 214-665-7265

A. GENERAL SOURCE INFORMATION (See Instructions Below)

1. Company Name Williams Four Corners LLC		**2. Source Name** Ojito Compressor Station	
3. Type of Oil and Natural Gas Operation natural gas compressor station		**4. New Minor Source?** ☐ Yes ☒ No **5. True Source Modification?** ☒ Yes ☐ No	
6. NAICS Code 213112		**7. SIC Code** 1389	
8. U.S. Well ID(s) or API Number(s) [if applicable] N/A			
9. Area of Indian Country Jicarilla Apache	**10. County** Rio Arriba	**11a. Latitude** 36.506964	**11b. Longitude** -107.192883

ED_004016Q_00001128-00002

B. CONTACT INFORMATION (See Instructions Below)

1. Owner Name Williams Four Corners LLC	Title Glen Jasek - VP & GM, FCA
Mailing Address 1755 Arroyo Drive, Bloomfield, NM 87413	
Email Address Glen.Jasek@williams.com	
Telephone Number 505-632-4628	Facsimile Number 505-632-4781
2. Operator Name (if different from owner) same as owner	Title
Mailing Address	
Email Address	
Telephone Number	Facsimile Number
3. Source Contact Mitch Morris	Title Environmental Specialist
Mailing Address 1755 Arroyo Drive, Bloomfield, NM 87413	
Email Address Mitch.Morris@williams.com	
Telephone Number 505-632-4708	Facsimile Number 505-632-4782

4. Compliance Contact	Title
Mitch Morris	Environmental Specialist
Mailing Address	
1755 Arroyo Drive, Bloomfield, NM 87413	
Email Address	
Mitch.Morris@williams.com	
Telephone Number	Facsimile Number
505-632-4708	505-632-4782

C. EMISSIONS AND OTHER SOURCE INFORMATION

Include all of the following information in the table below and as attachments to this form:

Note: The emission estimates can be based upon actual test data or, in the absence of such data, upon procedures acceptable to the Reviewing Authority. The following procedures are generally acceptable for estimating emissions from air pollution sources: (1) unit-specific emission tests; (2) mass balance calculations; (3) published, verifiable emission factors that are applicable to the unit (i.e., manufacturer specifications); (4) other engineering calculations; or (5) other procedures to estimate emissions specifically approved by the Reviewing Authority. Guidance for estimating emissions can be found at https://www.epa.gov/chief.

- ■ Narrative description of the operations.
- ■ Identification and description of any air pollution control equipment and compliance monitoring devices or activities.
- ■ Type and actual amount (annually) of each fuel that will be used.
- ■ Type of raw materials used (e.g., water for hydraulic fracturing).
- ■ Actual, annual production rates.
- ■ Actual operating schedules.
- ■ Any existing limitations on source operations affecting emissions or any work practice standards, where applicable, for all regulated New Source Review (NSR) pollutants at your source. Indicate all requirements referenced in the Federal Implementation Plan (FIP) for True Minor Sources in Indian Country in the Oil and Natural Gas Production and Natural Gas Processing Segments of the Oil and Natural Gas Sector that apply to emissions units and air pollution generating activities at the source or proposed. Include statements indicating each emissions unit that is an emissions unit potentially subject to the requirements referenced in the FIP, but does not meet the definition of an affected facility under the referenced requirement, and therefore, is not subject to those requirements.
- ■ For each emissions unit comprising the new source or modification, estimates of the total allowable (potential to emit) annual emissions at startup of production from the air pollution source for the following air pollutants: particulate matter, PM_{10}, $PM_{2.5}$, sulfur oxides ( ), nitrogen oxides (NO_x), carbon monoxide (CO), volatile organic compound (VOC), lead (Pb) and lead compounds, fluorides (gaseous and particulate), sulfuric acid mist (H_2SO_4), hydrogen sulfide (H_2S), total reduced sulfur (TRS) and reduced sulfur compounds, including all calculations for the estimates. Allowable annual emissions are defined as: emissions rate of an emissions unit calculated using the maximum capacity of a stationary source to emit a pollutant under its physical and operational design. Any physical

or operational limitation on the capacity of the source to emit a pollutant, including air pollution control equipment and restrictions on hours of operation or on the type or amount of material combusted, stored, or processed, shall be treated as part of its design if the limitation, or the effect it would have on emissions, is legally and practically enforceable. You must determine the potential for emissions within 30 days from the startup of production.

☒ For each emissions unit comprising the new source or modification, estimates of the total actual annual emissions during the upcoming, consecutive 12 months from the air pollution source for the following air pollutants: particulate matter (PM, PM_{10}, $PM_{2.5}$), sulfur oxides (SO_x), nitrogen oxides (NOx), carbon monoxide (CO), volatile organic compound (VOC), lead (Pb) and lead compounds, ammonia (NH_3), fluorides (gaseous and particulate), sulfuric acid mist (H_2SO_4), hydrogen sulfide (H_2S), total reduced sulfur (TRS) and reduced sulfur compounds, including all calculations for the estimates. Estimates of actual emissions must take into account equipment, operating conditions, and air pollution control measures. You should calculate an estimate of the actual annual emissions using estimated operating hours, production rates, in-place control equipment, and types of materials processed, stored, or combusted.

D. TABLE OF ESTIMATED EMISSIONS

Provide in the table below estimates of the total allowable annual emissions in tons per year (tpy) and total actual annual emissions (tpy) for the following pollutants for all emissions units comprising the new source or modification.

POLLUTANT	TOTAL ALLOWABLE ANNUAL EMISSIONS (TPY)	TOTAL ACTUAL ANNUAL EMISSIONS (TPY)
PM	0.43	0.43
PM_{10}	0.43	0.43
$PM_{2.5}$	0.43	0.43
SO_x	0.03	0.03
NO_x	20.06	20.06
CO	34.55	34.55
VOC	40.05	40.05
Pb	0	0

POLLUTANT	TOTAL ALLOWABLE ANNUAL EMISSIONS (TPY)	TOTAL ACTUAL ANNUAL EMISSIONS (TPY)
NH3	0	0
Fluorides	0	0
H_2SO_4	0	0
H_2S	0	0
TRS	0	0

Instructions for Part 2

Please answer all questions. If the item does not apply to the source and its operations write "n/a". If the answer is not known write "unknown".

A. General Source Information

1. Company Name: Provide the complete company name. For corporations, include divisions or subsidiary name, if any.
2. Source Name: Provide the source name. Please note that a source is a site, place, or location that may contain one or more air pollution emitting units.
3. Type of Operation: Indicate the generally accepted name for the oil and natural gas production or natural gas processing segment operation (e.g., oil and gas well site, tank battery, compressor station, natural gas processing plant).
4. New True Minor Source: [Per Federal Indian Country Minor New Source Review Rule, 40 CFR 49.153].
5. True Minor Source Modification: [Per Federal Indian Country Minor New Source Review Rule, 40 CFR 49.153].
6. North American Industry Classification System (NAICS): The NAICS Code for your oil and natural gas source can be found at the following link for North American Industry Classification System: http://www.census.gov/eos/www/naics/.
7. Standard Industrial Classification Code (SIC Code): Although the new NAICS code has replaced the SIC codes, much of the Clean Air Act permitting processes continue to use these codes. The SIC Code for your oil and natural gas source can be found at the following link for Standard Industrial Classification Codes: http://www.osha.gov/pls/imis/sic_manual.html.
8. U.S. Well ID or API Number: Unique well identifier as assigned by the Federal or State oil and gas regulatory agency with primacy, using the American Petroleum Institute (API) Standard for number format (pre-2014) or the Professional Petroleum Data Management (PPDM) Association US Well Number Standard (2014-present). Provide IDs for all oil and natural gas production wells associated with the facility, if applicable. May not be applicable for downstream production sources, such as compressor stations.
9. Area of Indian Country: Provide the name of the Indian reservation within which the source is operating.
10. County: Provide the County within which the source is operating.
11. Latitude & Longitude (11a. and 11b.): Provide latitude and longitude location(s) in decimal degrees, indicating the datum used in parentheses. These are GPS (global positioning system) coordinates. This information should be provided in decimal degrees with 6 digits to the right of the decimal point, indicating the datum used in parentheses (i.e., NAD 27, NAD 83, WGS 84 – WGS 84 is preferred over NAD 27).

B. Contact Information

Please provide the information requested in full.

1. Owners: List the full name (last, middle initial, first) of all owners of the source.
2. Operator: Provide the name of the operator of the source if it is different from the owner(s).
3. Source Contact: The source contact must be the local contact authorized to receive requests for data and information.
4. Compliance Contact: The compliance contact must be the local contact responsible for the source's compliance with this rule. If this is the same as the Source Contact please note this on the form.

C. Attachments

The information requested in the attachments will enable the U.S. Environmental Protection Agency (EPA) to understand the type of oil and natural gas source being registered and the nature and extent of the air pollutants to be emitted.

Disclaimers:

The public reporting and recordkeeping burden for this collection of information is estimated to average 6 hours per response. Send comments on the Agency's need for this information, the accuracy of the provided burden estimates, and any suggested methods for minimizing respondent burden, including through the use of automated collection techniques to the Director, Collection Strategies Division, U.S. Environmental Protection Agency (2822T), 1200 Pennsylvania Ave., NW, Washington, D.C. 20460. Include the OMB control number in any correspondence. Do not send the completed form to this address.

Information in these forms submitted in compliance with the final Federal Indian Country Minor NSR rule may be claimed as confidential. A company may assert a claim of confidentiality for information submitted by clearly marking that information as confidential. Such information shall be treated in accordance with EPA's procedures for information claimed as confidential at 40 CFR part 2, subpart B, and will only be disclosed by the means set forth in the subpart. If no claim of confidentiality accompanies the report when it is received by EPA, it may be made public without further notice to the company (40 CFR 2.203).

ED_004016Q_00001128-00008

Narrative Description of Operations

The Ojito Compressor Station, owned and operated by Williams Four Corners LLC (Williams) and originally constructed prior to 1976, is a natural gas compressor station on a natural gas pipeline. This compressor station has been permitted as a Part 71 Title V source with permit R6FOPP71-05. The facility was permitted to use three natural gas fired Superior 8G825 reciprocating engines to drive natural gas compressors in order to boost pipeline line pressure. The facility also includes a pig launcher which collects liquids (consisting of water and hydrocarbons condensed from the natural gas) removed from the pipeline by pigging operations, condensate storage tanks, an emergency generator, and other ancillary equipment.

In April 2017, Williams had submitted an application for a synthetic minor source permit, requesting that the TV renewal application be withdrawn. The major sources at the facility were three compressor/engine packages (with emissions controls – hence the synthetic minor status) and two condensate storage tanks, as well as other smaller and insignificant emission sources.

The facility experienced a catastrophic fire on July 18, 2017, rendering all three compressor engines permanently inoperable. Since the shutdown of the facility on July 18th, Williams' gathering operations have experienced a decrease in the volume of natural gas and the amount of liquids managed by this portion of our gathering system due to the loss of compression at Ojito. Without the gas to move them, the accumulation of liquids in the pipeline has the potential to affect pipeline integrity due to corrosion.

With the October 2017 submittal of the Part 1 forms for the *Registration for New True Minor Oil and Natural Gas Sources and Minor Modifications at Existing True Minor Oil and Natural Gas Sources*, Williams began the permitting process of replacing the three existing 800-hp Superior 8G825 compressor engines with a single 1317-hp (site-rated) Waukesha 7042GL compressor engine package, maintaining facility operations in accordance with the *Federal Implementation Plan (FIP) for True Minor Sources in Indian Country in the Oil and Natural Gas Production and Natural Gas Processing segments of the Oil and Natural Gas Sector*. This equipment exchange results in the facility becoming a true minor source, as defined the *Federal Minor New Source Review Program in Indian Country* regulations, at §49.152(d). With this application, Williams is submitting Part 2 of the registration.

ED_004016Q_00001128-00009

Description of Emission Units & Air Pollution Generating Activities

Emission Unit No.	Unit Description	Control Equipment
E-1	IC Engine Manufacturer – Waukesha Model – 7042GL Design – 4 Stroke Lean Burn (4SLB) Capacity – 1317 horsepower Manufactured (commence construction) November 10, 1998 Installed – February 22, 2018 Fuel Type – Natural Gas Primary Use – Natural gas compressor driver Serial Number – C-12695/1	None
EG-1	IC Engine Manufacturer – Waukesha Roline Model – H88RU Design – 4 Stroke Rich Burn (4SRB) Capacity – 180 horsepower Manufactured (commence construction) – unknown Installed – pre-1976 Fuel Type – Natural Gas Primary Use – Emergency Generator Serial Number – 65X1946	None
T-11	4200 gal Condensate Storage Tank Manufacturer – American Tank and Steel Model – N-5169 Installed – 1976 Primary use – Storage of natural gas condensate Maximum usage gal/day – 126 Maximum usage gal/yr. – 23,100 Serial Number – N-5169	Fixed Roof

ED_004016Q_00001128-00010

Description of Emission Units & Air Pollution Generating Activities (cont.)

Emission Unit No.	Unit Description	Control Equipment
T-12	4200 gal Condensate Storage Tank Manufacturer – American Tank and Steel Model – S-5168 Installed – 1976 Primary use – Storage of natural gas condensate Maximum usage gal/day – 126 Maximum usage gal/yr. – 23,100 Serial Number – S-5168	Fixed Roof
F-1	Valves, Flanges, Seals, etc (piping components) Installed – 1976	None
SSM	Startup, shutdown and maintenance emissions from compressors and associated piping Installed – 1976	None
PL	Pig Launcher emissions Installed – 1976	None
TL	Truck Loading Emissions	None

Air Pollution Control Equipment & Compliance Monitoring Devices or Activities
With the installation of the proposed compressor engine, the Ojito Compressor Station will utilize no air pollution control equipment or compliance monitoring devices.

Fuel Usage, Raw Materials Annual Production Rates and Operating Schedules
The compressor is used to compress field natural gas. Fuel use and engine capacity are provided on the attached emissions calculations worksheets. The facility operates up to 24 hours per day, seven days per week, 52 weeks per year.

Limitations on Source Operations (Regulatory Requirements as per §49.105)
The Potential To Emit (PTE) emissions for all regulated pollutants from the facility are less than the NSR major source thresholds. Potentially applicable regulations include:

NSPS JJJJ (*Standards of Performance for Stationary Spark Ignition Internal Combustion Engines*)

EU E-1 – This regulation is not applicable. Although, the Waukesha 7042GL compressor engine was relocated to this location on February 22, 2018, it had

ED_004016Q_00001128-00011

commenced construction November 10, 1998, prior to the regulation's effective date of June 12, 2006 (40 CFR §60.4230(a)(4)).

EU EG-1 - This regulation is not applicable. The Waukesha Roline emergency generator engine was installed before 1976, prior to the regulation's effective date of June 12, 2006 (§60.4230(a)(4)).

NESHAP ZZZZ (*National Emissions Standards for Hazardous Air Pollutants for Stationary Reciprocating Internal Combustion Engines*)

EU E-1 – This regulation is applicable. The facility is a remote area source of HAP emissions. The Waukesha 7042GL compressor engine is an existing non-emergency SI 4SLB RICE, and therefore must meet the inspection and maintenance requirements of Table 2d, row 8 (§63.6603(a)). Record of an annual evaluation of the facility's remote area source status must be maintained. 8 (§63.6603(f))

EU EG-1 – This regulation is applicable. The facility is a remote area source of HAP emissions. The Waukesha Roline emergency generator engine is an existing non-emergency SI 4SLB RICE, and therefore must meet the inspection and maintenance requirements of Table 2d, row 5 (§63.6603(a)). The unit must be operated and maintained according to a maintenance plan (§63.6625(e)(3)) and must be fitted with a non-resettable hour meter (§63.6625(f)). The unit must be operated according to the requirements of §63.6640(f) in order to be considered an emergency stationary RICE.

NSPS K, Ka and Kb (*Standards of Performance for Storage Vessels*)

EU T-11 and T-12 – These regulations are not applicable. The capacities of these tanks are less than the applicable thresholds of each regulation.

NSPS OOOO *(Standards of Performance for Crude Oil and Natural Gas Production, Transmission and Distribution for which Construction, Modification or Reconstruction Commenced After August 23, 2011, and on or before September 18, 2015*)

EU E-1 – This regulation is not applicable. The compressor associated with this compressor engine commenced construction January 18, 1994, prior to August 23, 2011 (§60.5365(c)).

EU T-11 and T-12 – This regulation is not applicable. The tanks commenced construction in 1976, prior to August 23, 2011 (§60.5365(c)).

NSPS OOOOa (*Standards of Performance for Crude Oil and Natural Gas Facilities for which Construction, Modification or Reconstruction Commenced After September 18, 2015*)

ED_004016Q_00001128-00012

EU E-1 – This regulation is not applicable. The compressor associated with this compressor engine is replacing compression of greater total horsepower and thus does not trigger a modification of the compressor station for purposes of §60.5397a (§60.5365a(j)(2)).

Estimated Allowable and Actual Emissions

The attached emissions workbook estimates the allowable (potential) emissions of criteria, HAP and GHG emissions from the facility. As it is anticipated that the facility will operate continuously (24 hours per day, 365 days per year), total actual emissions during the upcoming consecutive 12 months may be equal to the allowable emissions.

Other

Other than the following site map, facility layout diagram and process flow diagram, no other information is being provided with this registration.

ED_004016Q_00001128-00013

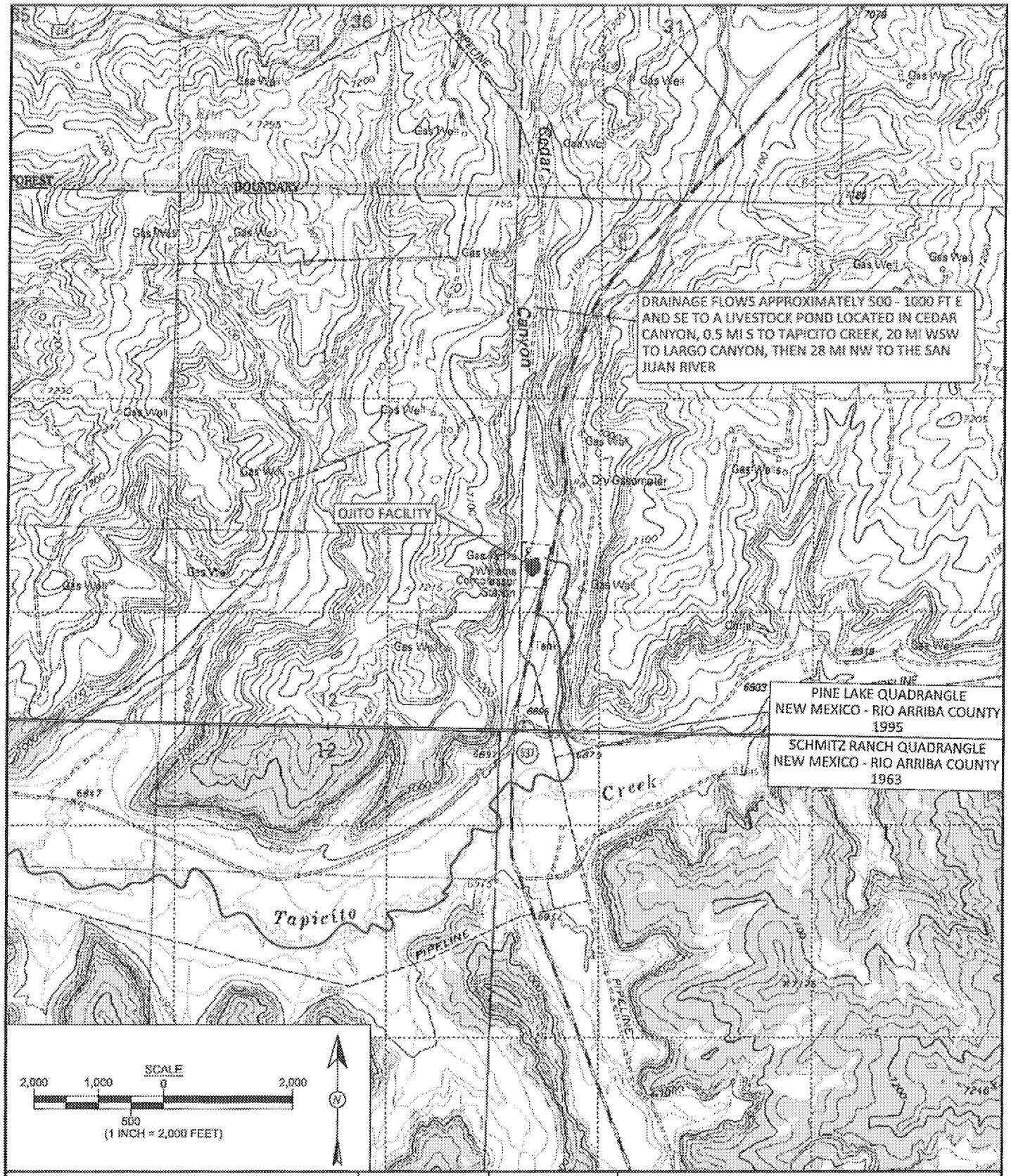

animas environmental services
Farmington, NM • Durango, CO
animasenvironmental.com

DRAWN BY:	DATE DRAWN:
S. Glasses	October 29, 2013
REVISIONS BY:	DATE REVISED:
C. Lameman	December 24, 2015
CHECKED BY:	DATE CHECKED:
S. Hinds	December 24, 2015
APPROVED BY:	DATE APPROVED:
E. McNally	December 24, 2015

FIGURE 1

TOPOGRAPHIC SITE LOCATION MAP
WILLIAMS FOUR CORNERS LLC
OJITO FACILITY
NW¼ NW¼, SECTION 7, T26N, R3W
RIO ARRIBA COUNTY, NEW MEXICO
N36.50697, W107.19263

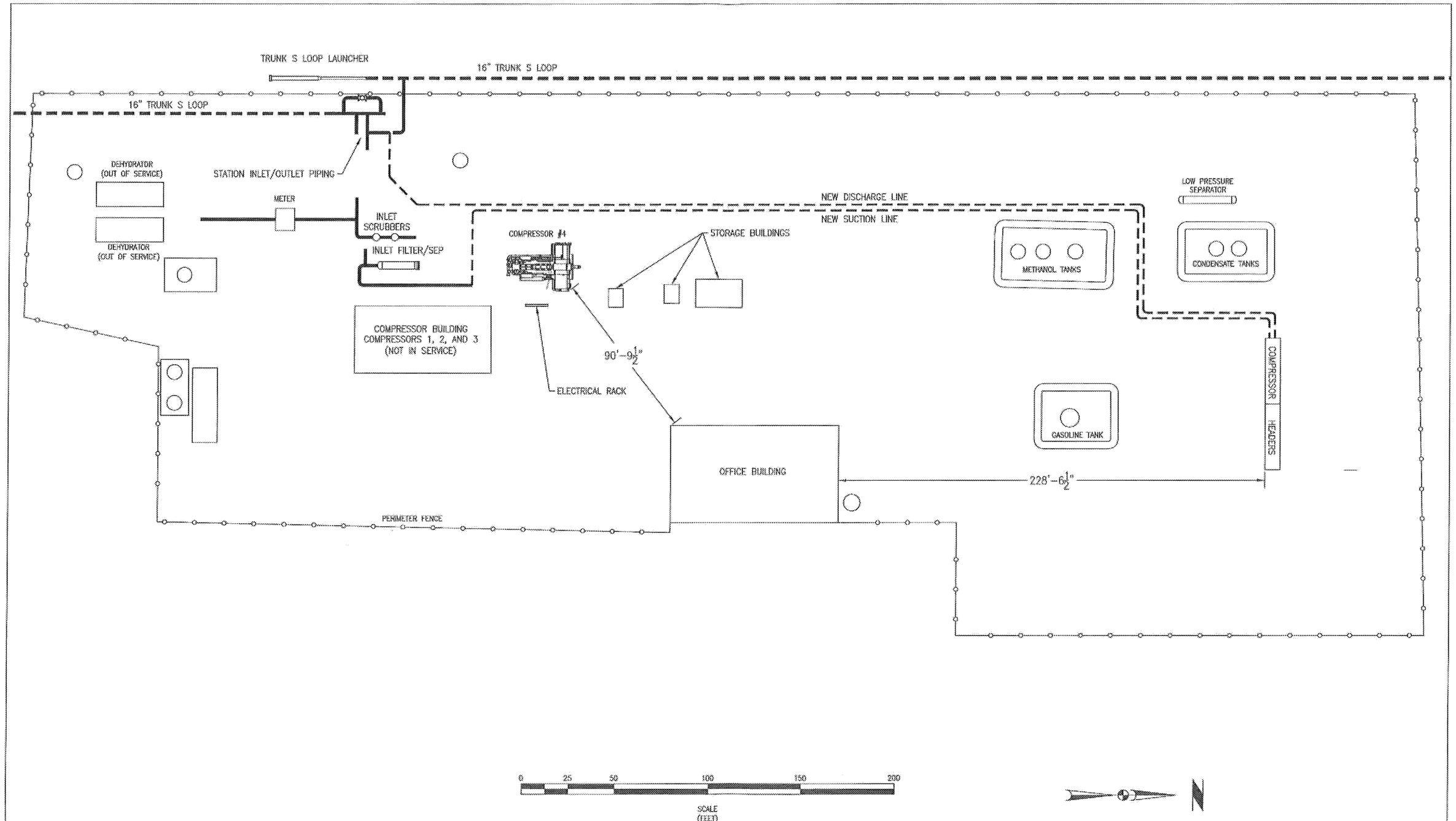

NOTES:

DRAWING NO.	TITLE

REFERENCE DRAWINGS

REV	DRAWN BY	DATE ISSUED	CHECKED BY	PROJECT ENG.	APPROVED BY

REVISIONS

WILLIAMS MIDSTREAM GAS & LIQUIDS

OJITO COMPRESSOR STATION
UNITS 5 AND 6 PROPOSED INSTALLATION SITES
PLOT PLAN

RIO ARRIBA NEW MEXICO

DRAWN BY	T. GOOSSEN	SCALE: AS NOTED	A.F.E.:
CHECKED BY			
PROJECT ENG.			
APPROVED BY			
DATE ISSUED	3/12/2018		0

Ojito Compressor Station
Process Flow Diagram

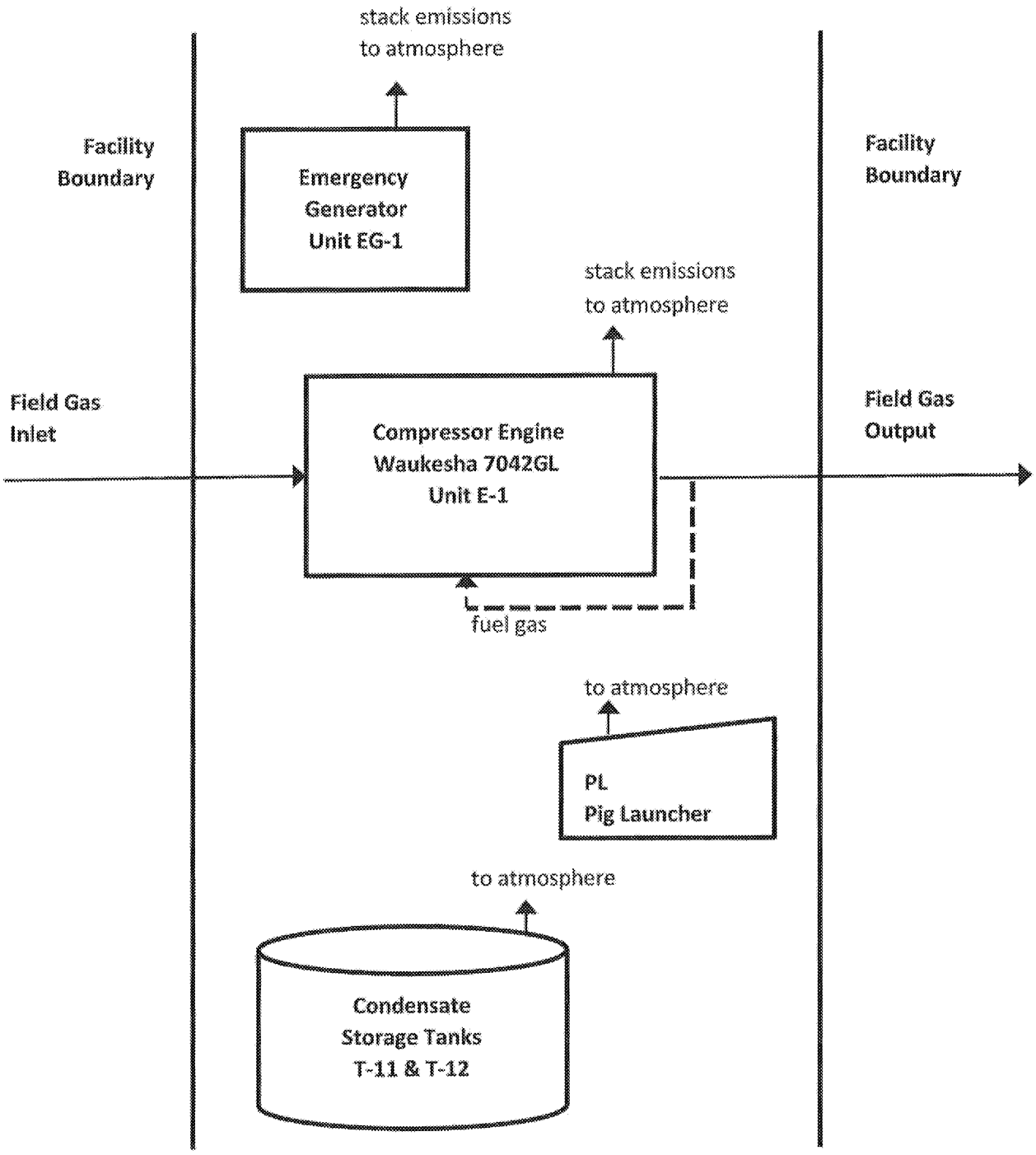

Facility Total Projected Emissions (Criteria Pollutants)

Company: Williams Four Corners LLC
Facility: Ojito Compressor Station
Date/Rev: March 2018, Revision 0

Unit Number	Description	NOX,		CO,		VOC,		SOX,		TSP,		PM10,		PM2.5,	
		pph	tpy	pph	tpy	pph	tpy	pph	tpy	pph	tpy	pph	tpy	pph	tpy
4	Waukesha 7042GL	4.35	19.07	7.69	33.69	2.90	12.71	0.01	0.03	9.75E-02	0.43	0.10	0.43	0.10	0.43
Gen	Waukesha H884U	3.96	0.99	3.42	0.86	0.06	0.01	--	--	--	--	--	--	--	--
T-11	Condensate Tank	--	--	--	--	--	10.08	--	--	--	--	--	--	--	--
T-12	Condensate Tank	--	--	--	--	--	1.02	--	--	--	--	--	--	--	--
F-1	Fugitve Emissions	--	--	--	--	0.92	4.02	--	--	--	--	--	--	--	--
SSM	SSM Emissions	--	--	--	--	--	4.47	--	--	--	--	--	--	--	--
PL	Pig Launcher Emissions	--	--	--	--	--	7.59	--	--	--	--	--	--	--	--
TL	Truck Loading Emissions	--	--	--	--	53.26	0.15	--	--	--	--	--	--	--	--
	Total	8.31	20.06	11.11	34.55	57.14	40.05	0.01	0.03	0.10	0.43	0.10	0.43	0.10	0.43

nissions Hazardous Air Pollutants)

:

Total HAPs,		Formaldehyde		n-Hexane		Benzene		Toluene		Ethylbenzene		Xylenes		2,2,4 Trimethylpentane	
pph	tpy	pph	tpy	pph	tpy	pph	tpy	pph	tpy	pph	tpy	pph	tpy	pph	tpy
0.50	2.25	0.49	2.14	--	--	0.02	0.07		0.03	--	--		0.02	--	--
--	--	--	--	--	--	--	--	--	--	--	--	--	--	--	--
--	0.31	--	--	--	2.72E-01	--	3.78E-02	--	0	--	1.10E-03	--	1.17E-03	--	2.39E-03
--	4.92E-02	--	--	--	4.69E-02	--	2.03E-03	--	0	--	6.50E-05	--	7.80E-05	--	1.75E-04
2.63E-02	0.12	--	--	1.78E-02	0.08	2.72E-03	1.19E-02	4.32E-03	1.88E-02	1.49E-04	6.54E-04	1.10E-03	4.82E-03	2.01E-04	8.79E-04
--	0.13	--	--	--	0.09	--	1.32E-02	--	2.11E-02	--	7.28E-04	--	5.37E-03	--	8.58E-04
--	0.22	--	--	--	0.15	--	2.25E-02	--	3.58E-02	--	1.24E-03	--	9.12E-03	--	1.46E-03
2.56	0.01	--	--	2.44	6.71E-03	0.11	2.90E-04	--	--	3.38E-03	9.30E-06	3.64E-03	1.00E-05	9.11E-03	2.50E-05
3.09	3.09	0.49	2.14	2.46	0.64	0.12	0.15	4.32E-03	0.10	3.53E-03	3.79E-03	4.74E-03	3.84E-02	9.31E-03	5.69E-03

Green House Gas Emissions Data and Calculations

Sources	Facility Total Emissions				
	CO2, tpy	CH4, tpy	N2O, tpy	GHG, tpy	CO2e, tpy
Engine & Turbine Exhaust	5,652.55	1.07E-01	1.07E-02	5,652.67	5658.39
SSM Blowdowns	0.26	10.73	--	10.99	268.57
Reciprocating Compressor Venting	1.21	50.79	--	52.00	1270.89
Pig Launcher	0.44	18.25	--	18.68	456.57
Equipment Leaks	0.13	5.57	--	5.70	139.31
Natural Gas Pneumatic Device Venting	1.08	45.07	--	46.15	1127.90
Natural Gas Driven Pneumatic Pump Venting	0.05	1.92	--	1.97	48.10
Storage Tanks	0.09	1.08	--	1.16	26.97
Total	5,655.80	133.51	1.07E-02	5,789.32	8,996.69

Engine & Turbine Exhaust Emissions

Unit Numbers	Description	Emission Factors			Emission Rates		
		CO2, kg/MMBtu	CH4, kg/MMBtu	N2O, kg/MMBtu	CO2, tpy	CH4, tpy	N2O, tpy
4	Engine	53.06	1.00E-03	1.00E-04	5,652.55	1.07E-01	1.07E-02
	Total				5,652.55	1.07E-01	1.07E-02

The emissions factors are taken from 40 CFR 98, Subpart C, Tables C-1 & C-2
Emission Rates (tpy) = kg/MMBtu x 2.2 lb/kg x MMBtu/yr / 2,000 lb/ton

Unit Numbers	Description	Fuel Types	Operating Times, hr/yr	LHV Design Heat Rates, MMBtu/hr	HHV	
					Design Heat Rates, MMBtu/hr	Fuel Usages, MMBtu/yr
4	Engine	Nat. Gas	8,760	9.95	11.06	96,847

The fuel types and operating times are provided by Williams
The LHV design heat rates are taken from manufacturers data
HHV Design Heat Rates (MMBtu/hr) = LHV Design Heat Rates (MMBtu/hr) / 0.9 LHV/HHV
HHV Fuel Usages (MMBtu/yr) = HHV Design Heat Rates (MMBtu/hr) x hr/yr

SSM Blowdown Emissions

Unit Numbers	Description	Total Gas Losses, scf/yr	CO2 Emission Factors, lb/scf	CH4 Emission Factors, lb/scf	Emission Rates	
					CO2, tpy	CH4, tpy
SSM	SSM Blowdowns	650,000	0.0008	0.0330	0.26	10.73

The annual blowdown volumes are calculated from data provided by Williams
The CO2 and CH4 emission factors are calculated from the facility extended gas analysis
Emission Rates (tpy) = scf/yr x lb/scf / 2,000 lb/ton

Green House Gas Emissions Data and Calculations

Reciprocating Compressor Venting Emissions

Unit Numbers	Description	Emission Rates	
		CO2, tpy	CH4, tpy
NA	Blowdown Valve Leakage	0.12	4.85
NA	Rod Packing Emissions	1.10	45.94
NA	Isolation Valve Leakage	0.00	0.00
	Total	1.21	50.79

Operating or standby mode - includes blowdown valve leakage through blowdown vent stack
Operating mode - includes rod packing emissions
Non-operating depressurized mode - includes isolation valve leakage through open blowdown vents (without blind flanges)
Rod packing gas emissions assume 4 cylinders per compressor
A combination of equations W-26 & W-36 (Subpart W) is used to calculate reciprocating compressor emissions
As the NMED requires CO2 & CH4 emissions rather than CO2e emissions, it is not necessary to include the global warming potential from equation W-36
CO2 Emission Rates (tpy) = # x scf/hr x hr/yr x (CO2 Mole Percent (%) / 100) x CO2 Density (kg/scf) x (2,204.6 lb/tonne / 2,000 lb/ton) / 1,000 kg/tonne
CH4 Emission Rates (tpy) = # x scf/hr x hr/yr x (CH4 Mole Percent (%) / 100) x CH4 Density (kg/scf) x (2,204.6 lb/tonne / 2,000 lb/ton) / 1,000 kg/tonne

Unit Numbers	Description	Number of Compressors #	Gas Emissions, scf/hr	Operating Times, hr/yr	CO2 Mole Percents, %	CH4 Mole Percents, %	CO2 Density, kg/scf	CH4 Density, kg/scf
NA	Blowdown Valve Leakage	1	33.5	8,760	0.68	78.11	0.0526	0.0192
NA	Rod Packing Emissions	1	317.2	8,760	0.68	78.11	0.0526	0.0192
NA	Blowdown Valve Leakage (Sta	1	10.5	0	0.68	78.11	0.0526	0.0192

The number of compressors are provided by Williams
Blowdown valve leakage (33.5 scf/hr) and rod packing emissions occur in operating mode
Blowdown valve leakage (10.5 scf/hr) occurs in standby pressurized mode
Emission factors are the three year rolling average (2012-2014) of all measurements in the Williams Field Services, LLC compressor fleet located at natural gas processing plants
The operating times (the average operating times for all station compressors combined) are provided by Williams
The facility CO2 and CH4 contents are taken from the facility extended gas analysis
The CO2 & CH4 densities (kg/scf) are taken from Subpart W, Paragraph 98.233(v)

Pig Launcher Emissions

Unit Numbers	Description	Total Gas Losses, scf/yr	CO2 Emission Factors, lb/scf	CH4 Emission Factors, lb/scf	Emission Rates	
					CO2, tpy	CH4, tpy
PL	Pig Launcher	1,105,000	0.0008	0.0330	0.44	18.25
	Total				0.44	18.25

The annual blowdown volumes are calculated from data provided by Williams
The CO2 and CH4 emission factors are calculated from the facility extended gas analysis
Emission Rates (tpy) = scf/yr x lb/scf / 2,000 lb/ton

Green House Gas Emissions Data and Calculations

Equipment Leaks Emissions

Unit Numbers	Description	Emission Rates	
		CO2, tpy	CH4, tpy
NA	Valves	0.1	4.4
NA	Connectors	0.0	0.5
NA	Open-Ended Lines	0.0	0.3
NA	Pressure Relief Valves	0.0	0.4
	Total	0.1	5.6

A combination of equations W-31 & W-36 (Subpart W) is used to calculate uncombusted CO2 & CH4 emissions

As the NMED requires CO2 & CH4 emissions rather than CO2e emissions, it is not necessary to include the global warming potential from equation W-36

CO2 Emission Rate (tpy) = # x scf/hr/component x (CO2 Content (mole %) / 100) x hr/yr x CO2 Density (kg/scf) x (2,204.6 lb/tonne / 2,000 lb/ton) / 1,000 kg/tonne

CH4 Emission Rate (tpy) = # x scf/hr/component x (CH4 Content (mole %) / 100) x hr/yr x CH4 Density (kg/scf) x (2,204.6 lb/tonne / 2,000 lb/ton) / 1,000 kg/tonne

Unit Numbers	Description	Number of Components, #	Emission Factors, scf/hr /component	CO2 Contents, mole %	CH4 Contents, mole %	Operating Times, hr/yr	CO2 Density, kg/scf	CH4 Density, kg/scf
NA	Valves	252	0.121	0.68	78.11	8,760	0.0526	0.0192
NA	Connectors	187	0.017	0.68	78.11	8,760	0.0526	0.0192
NA	Open-Ended Lines	73	0.031	0.68	78.11	8,760	0.0526	0.0192
NA	Pressure Relief Valves	13	0.193	0.68	78.11	8,760	0.0526	0.0192

The number of sources are calculated based on the number of compressors and dehydrators at the station (see criteria pollutant and HAP equipment leaks calculations)

The emission factors are taken from Subpart W, Table W-1A (Western U.S. - Gas Service)

The facility CO2 and CH4 contents are taken from the facility extended gas analysis

The operating times are provided by Williams (default is the entire year)

The CO2 & CH4 densities are taken from Subpart W, Paragraph 98.233(v)

Natural Gas Pneumatic Device Venting Emissions

Unit Numbers	Description	Number of Devices, #	Emission Factors, scf/hr/device	Operating Times, hr/yr	Emission Rates	
					CO2, tpy	CH4, tpy
NA	Continuous High Bleed Pneumatic Devices	0	37.3	8,760	0.00	0.00
NA	Intermittent Bleed Pneumatic Devices	23	13.5	8,760	1.07	44.87
NA	Continuous Low Bleed Pneumatic Devices	1	1.39	8,760	0.00	0.20
	Total				1.08	45.07

The number of devices are provided by Williams

The emission factors are taken from Subpart W, Table W-1A (Western U.S. - Gas Service)

The operating times are provided by Williams

Equation W-1 (Subpart W) is used to calculate CO2 & CH4 emissions

As the NMED requires CO2 & CH4 emissions in addition to CO2e emissions, it is necessary to divide by the global warming potentials

CO2 Emission Rates (tpy) = # x scf/hr/device x (CO2 Content (mole %) / 100) x CO2 Conversion Factors (tonne CO2e/scf) x hr/yr x (2,204.6 lb/tonne / 2,000 lb/ton) / CO2 Global Warming Potentials (tonne CO2e/tonne CO2)

CH4 Emission Rates (tpy) = # x scf/hr/device x (CH4 Contents (mole %) / 100) x CH4 Conversion Factors (tonne CO2e/scf) x hr/yr x (2,204.6 lb/tonne / 2,000 lb/ton) / CH4 Global Warming Potentials (tonne CO2e/tonne CH4)

Unit Numbers	Description	CO2 Contents, mole %	CH4 Contents, mole %	CO2 Conversion Factors, tonne CO2e /scf	CH4 Conversion Factors, tonne CO2e /scf	CO2 Global Warming Potentials, tonne CO2e /tonne CO2	CH4 Global Warming Potentials, tonne CO2e /tonne CH4
NA	Continuous High Bleed Pneumatic Devices	0.68	78.11	5.262E-05	4.790E-04	1	25
NA	Continuous Low Bleed Pneumatic Devices	0.68	78.11	5.262E-05	4.790E-04	1	25
NA	Intermittent Bleed Pneumatic Devices	0.68	78.11	5.262E-05	4.790E-04	1	25

The facility CO2 and CH4 contents are taken from the facility extended gas analysis

The conversion factors are taken from Subpart W, Paragraph 98.233(a)

The global warming potentials are taken from 40 CFR Part 98, Table A-1

Green House Gas Emissions Data and Calculations

Natural Gas Driven Pneumatic Pump Venting Emissions

Emission Rates

Unit Number	Description	Number of Pumps, #	Emission Factor, scf/hr/pump	Operating Time, hr/yr	Emission Rates	
					CO2, tpy	CH4, tpy
NA	Pneumatic Pump Venting	1	13.3	8,760	0.05	1.92

The number of pumps are provided by Williams
The emission factor is taken from Subpart W, Table W-1A (Western U.S. - Gas Service)
The operating time is provided by Williams (default is the entire year)
Equation W-2 (Subpart W) is used to calculate CO2 & CH4 emissions
As the NMED requires CO2 & CH4 emissions in addition to CO2e emissions, it is necessary to divide by the global warming potentials
CO2 Emission Rate (tpy) = # x scf/hr/pump x (CO2 Content (mole %) / 100) x CO2 Conversion Factor (tonne CO2e/scf) x hr/yr
x (2,204.6 lb/tonne / 2,000 lb/ton) / CO2 Global Warming Potentials (tonne CO2e/tonne CO2)
CH4 Emission Rate (tpy) = # x scf/hr/pump x (CH4 Content (mole %) / 100) x CH4 Conversion Factor (tonne CO2e/scf) x hr/yr
x (2,204.6 lb/tonne / 2,000 lb/ton) / CH4 Global Warming Potentials (tonne CO2e/tonne CH4)

Unit Number	Description	CO2 Content, mole %	CH4 Content, mole %	CO2 Conversion Factor, tonne CO2e /scf	CH4 Conversion Factor, tonne CO2e /scf	CO2 Global Warming Potential, tonne CO2e /tonne CO2	CH4 Global Warming Potential, tonne CO2e /tonne CH4
NA	Pneumatic Pump Venting	0.68	78.11	5.262E-05	4.790E-04	1	25

The facility CO2 and CH4 contents are taken from the facility extended gas analysis
The conversion factors are taken from Subpart W, Paragraph 98.233(a)
The operating time is provided by Williams (the default is the entire year)
The global warming potentials are taken from 40 CFR Part 98, Table A-1

Storage Tank Emissions

Unit Number	Description	Emission Rates	
		CO2, tpy	CH4, tpy
T11	Storage Tank	8.62E-02	1.08
T12	Storage Tank	0.00	0.00
	Total	0.09	1.08

The emission rates are taken from ProMax output files, as applicable

Green House Gas Emissions Data and Calculations

Gas Stream Composition

Components	Mole Percents, %	Molecular Weights, lb/lb-mole	Component Weights, lb/lb-mole	Weight Percent of Total, %	Emission Factors, lb/scf
Carbon Dioxide	0.6808	44.01	0.30	1.3930	0.0008
Hydrogen Sulfide	0.0000	34.07	0.00	0.0000	0.0000
Nitrogen	0.7255	28.01	0.20	0.9448	0.0005
Methane	78.1110	16.04	12.53	58.2517	0.0330
Ethane	10.8480	30.07	3.26	15.1662	0.0086
Propane	5.5586	44.09	2.45	11.3950	0.0065
IsoButane	0.9025	58.12	0.52	2.4387	0.0014
Normal Butane	1.4859	58.12	0.86	4.0152	0.0023
IsoPentane	0.5070	72.15	0.37	1.7007	0.0010
Normal Pentane	0.3935	72.15	0.28	1.3200	0.0007
Cyclopentane	0.0274	70.14	0.02	0.0894	0.0001
n-Hexane	0.1177	86.17	0.10	0.4715	0.0003
Cyclohexane	0.0559	84.16	0.05	0.2187	0.0001
Other Hexanes	0.2016	86.18	0.17	0.8078	0.0005
Heptanes	0.2047	100.20	0.21	0.9536	0.0005
Methylcyclohexane	0.0588	98.19	0.06	0.2684	0.0002
2,2,4-Trimethylpentane	0.0010	100.21	0.00	0.0047	0.0000
Benzene	0.0198	78.11	0.02	0.0719	0.0000
Toluene	0.0267	92.14	0.02	0.1144	0.0001
Ethylbenzene	0.0008	106.17	0.00	0.0039	0.0000
Xylenes	0.0059	106.17	0.01	0.0291	0.0000
C8+ heavies	0.0367	110.00	0.07	0.3411	0.0002
Total	100.0000		21.51	100.0000	0.0567
VOC			5.21	--	0.0137

Gas stream composition obtained from Ojito extended gas analysis dated 8/1/16

Component Weights (lb/lb-mole) = [Mole Percents (%) / 100] x Molecular Weights (lb/lb-mole)

Weight Percent of Total (%) = 100 x Component Weights (lb/lb-mole) / Total Component Weight (lb/lb-mole)

Emission Factors (lb/scf) = [Mole Percents (%) / 100] x Molecular Weights (lb/lb-mole) / 379.4 scf/lb-mole

Engine Exhaust Emissions Calculations

Unit Number: 4

Description: Waukesha L7042GL *(4SLB, turbocharged)*

Note: The data on this worksheet applies to each individual emissions unit identified above.

Horsepower Calculations

6,980 ft above MSL	Elevation	
1,478 hp	Nameplate hp	Mfg. data
1,317 hp	Mfg. Site-rated hp	Mfg. product bulletin Power Derate, S8154-6, April 2001 (loss of 2% for every 1,000 ft over 1,500 ft)

Engine Specifications

1200 rpm	Engine rpm	Mfg. data
7040 cu in	Engine displacement	Mfg. data
123.43 psi	BMEP	Mfg. data (+[(792,000 x Mfg. Site-rated hp) / (rpm * in^3)])

Fuel Consumption

7416 Btu/hp-hr	Brake specific fuel consumption	Mfg. data (carried forward from previous appl.)
9.76 MMBtu/hr	Hourly fuel consumption	Btu/hp-hr x Mfg. site-rated hp / 1,000,000
10,849 scf/hr	Hourly fuel consumption	MMBtu/hr x 1,000,000 / Btu/scf
8,760 hr/yr	Annual operating time	Williams Four Corners LLC
85,536 MMBtu/yr	Annual fuel consumption	MMBtu/hr x hr/yr
95.04 MMscf/yr	Annual fuel consumption	scf/hr x hr/yr / 1,000,000
900 Btu/scf	Field gas heating value	Nominal heat content

Steady-State Emission Rates

Pollutants	Emission Factors, g/hp-hr	Uncontrolled Emission Rates pph	Uncontrolled Emission Rates tpy
NOX	1.50	4.35	19.07
CO	2.65	7.69	33.69
VOC	1.00	2.90	12.71

NO_X, CO & VOC emissions taken from Waukesha Bulletin 7005 0102

Uncontrolled Emission Rates (pph) = g/hp-hr x Mfg. Site-rated hp / 453.59 g/lb

Uncontrolled Emission Rates (tpy) = Uncontrolled Emission Rates (pph) x hr/yr / 2,000 lb/ton

Engine Exhaust Emissions Calculations

Unit Number: 4

Description: Waukesha L7042GL ***(4SLB, turbocharged)***

Pollutants	Emission Factors, lb/MMBtu	Uncontrolled Emission Rates	
		pph	tpy
SO2	5.88E-04	5.74E-03	2.51E-02
TSP	9.99E-03	9.75E-02	4.27E-01
PM10	9.99E-03	9.75E-02	4.27E-01
PM2.5	9.99E-03	9.75E-02	4.27E-01

Emission factors taken from AP-42, Table 3.2-2

Particulate factors include both filterable and condensible emissions

Uncontrolled Emission Rates (pph) = lb/MMBtu x MMBtu/hr

Uncontrolled Emission Rates (tpy) = Uncontrolled Emission Rates (pph) x hr/yr / 2,000 lb/ton

Exhaust Parameters

802	°F		Stack exit temperature	Mfg. data (carried forward from previous appl.)
8156	acfm	135.933333	Stack flowrate	Mfg. data (carried forward from previous appl.)
1.02	ft		Stack exit diameter	Williams Four Corners LLC
0.82	ft^2		Stack exit area	3.1416 x ((ft / 2) ^2)
162.54	fps		Stack exit velocity	acfm / ft^2 / 60 sec/min
22.00	ft		Stack height	Williams Four Corners LLC

GRI-HAPCalc® 3.0
Engines Report

Facility ID:	OJITO 7042GL	Notes:
Operation Type:	COMPRESSOR STATION	
Facility Name:	OJITO 7042GL	
User Name:		
Units of Measure:	U.S. STANDARD	

Note: Emissions less than 5.00E-09 tons (or tonnes) per year are considered insignificant and are treated as zero. These emissions are indicated on the report with a "0". Emissions between 5.00E-09 and 5.00E-05 tons (or tonnes) per year are represented on the report with "0.0000".

Engine Unit

Unit Name: 7042GL

Hours of Operation:	8,760	Yearly
Rate Power:	1,317	hp
Fuel Type:	FIELD GAS	
Engine Type:	4-Stroke, Lean Burn	
Emission Factor Set:	FIELD > EPA > LITERATURE	
Additional EF Set:	-NONE-	

Calculated Emissions (ton/yr)

Chemical Name	Emissions	Emission Factor	Emission Factor Set
HAPs			
Formaldehyde	2.1384	0.16830000 g/bhp-hr	GRI Literature
Benzene	0.0661	0.00520000 g/bhp-hr	GRI Literature
Toluene	0.0267	0.00210000 g/bhp-hr	GRI Literature
Xylenes(m,p,o)	0.0178	0.00140000 g/bhp-hr	GRI Literature
Total	2.2490		

ED_004016Q_00001128-00026

Waukesha

POWERING PERFORMANCE

L7042GL

VHP® Gas Engine
886 - 1547 BHP

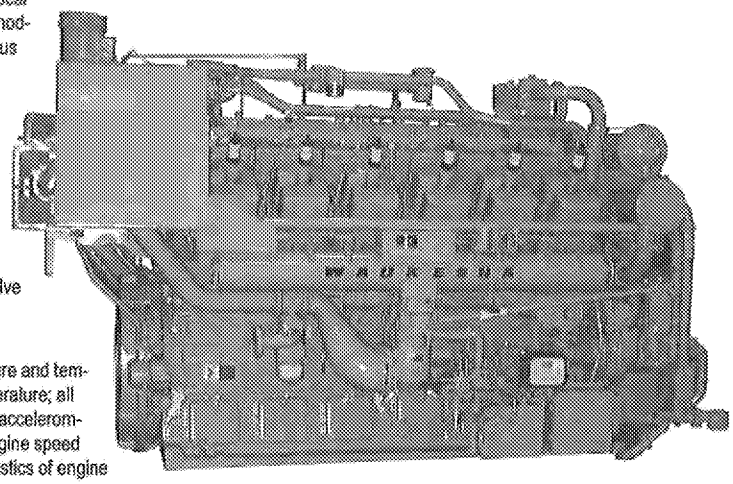

Engine shown without Extender Series Features.

Model L7042GL with ESM®
Turbocharged and Intercooled, Twelve Cylinder, Lean Combustion, Four-Cycle Gas Engine

STANDARD EQUIPMENT

AIR CLEANER – Two, 3" dry type filter with hinged rain shield and service indicator.

BARRING DEVICE – Manual.

BATTERY BOX – Ship loose battery box designed to accommodate two series 31 12 VDC batteries. Includes power disconnect switch and 20 foot (6.1 m) cable for connection to ESM Power Distribution Box.

BEARINGS – Heavy duty, replaceable, precision type.

BREATHER – Self regulating, closed system.

CONNECTING RODS – Drop forged steel, rifle drilled.

CONTROL SYSTEM – Waukesha Engine System Manager (ESM) integrates spark timing control, speed governing, detonation detection, start-stop control, diagnostic tools, fault logging and engine safeties. Engine Control Unit (ECU) is central brain of the control system and main customer interface. Interface with ESM is through 25 foot (7.6 m) harness to local panel, through MODBUS RTU slave connection RS-485 multidrop hardware, and through the Electronic Service Program (ESP). Customer connections are only required to the local panel, fuel valve, and 24V DC power supply. Compatible with Woodward load sharing module. ESM meets Canadian Standards Association Class I, Division 2, Group D, hazardous location requirements. ESM controlled prechamber logic.

CRANKCASE – Integral crankcase and cylinder frame. Main bearing caps drilled and tapped for temperature sensors. Does not include sensors.

CRANKSHAFT – Counterweighted, forged steel, seven main bearings, and dynamically balanced.

CYLINDERS – Removable bainitic cast iron wet type cylinder liners, chrome plated on outer diameter.

CYLINDER HEADS – Twelve interchangeable. Two hard faced intake and two hard faced exhaust valves per cylinder. Hard faced intake and exhaust valve seat inserts. Roller valve lifters and hydraulic push rods. Includes prechamber and related fuel control valves.

ENGINE ROTATION – Counterclockwise when facing flywheel.

ENGINE MONITORING DEVICES – Factory mounted and wired sensors for lube oil pressure and temperature; intake manifold temperature and pressure; overspeed; and jacket water temperature; all accessible through ESM®. ESM continually monitors combustion performance through accelerometers to provide detonation protection. Dual magnetic pick-ups are used for accurate engine speed monitoring. ESM provides predictive spark plug diagnostics as well as advanced diagnostics of engine and all ESM sensors and logs any faults into non-volatile flash memory.

EXHAUST THERMOCOUPLES – 14 K-type thermocouples. One for each individual cylinder and one pre-turbine for each bank and 25 foot (7.6 m) harness.

EXHAUST OUTLET – Single vertical at rear. Flexible stainless steel connection with 8" (203 mm) pipe flange.

FLYWHEEL – Approx. WR2 = 155000 lb-in2; with ring gear (208 teeth), machined to accept two drive adapters: 31.88" (810 mm) pilot bore, 30.25"(768 mm) bolt circle, (12) 0.75"–10 tapped holes; or 28.88" (734 mm) pilot bore, 27.25" (692 mm) bolt circle, (12) 0.625"–11 tapped holes and (12) 0.75"–10 tapped holes.

FLYWHEEL HOUSING – No. 00 SAE.

FUEL SYSTEM – Single 3" ANSI flange fuel inlet connection. Dual natural gas, 4" (102 mm) duplex updraft carburetors. Two mounted Mooney Flowgrid 250, 2" (51 mm) gas regulators, 43 – 60 psi (296 – 414 kPa) gas inlet pressure required. Prechamber fuel system and control logic. 10 foot (3 m) harness provided for ESM control of customer supplied fuel shutoff valve.

GOVERNOR – Electric throttle actuator controlled by ESM with throttle position feedback. Governor tuning is performed using ESP. ESM includes option of a load-coming feature to improve engine response to step loads.

IGNITION SYSTEM – Ignition Power Module (IPM) controlled by ESM, with spark timing optimized for any speed-load condition. Dual voltage energy levels automatically controlled by ESM to maximize spark plug life.

INTERCOOLER – Air-to-water.

LEVELING BOLTS

LIFTING EYES – Requires 9.5 ton Working Load Limit (W.L.L.) anchor shackles.

LUBRICATION – Full pressure, gear type pump. Engine mounted full flow lube oil micro-fiberglass filters with mounted differential pressure gauge. MICROSPIN® bypass filter, engine mounted. Lube oil strainer, mounted. Air/gas motor driven prelube pump, requires final piping.

MANIFOLDS – Exhaust, (2) water cooled.

OIL COOLER – Shell and tube type, with thermostatic temperature controller and pressure regulating valve. Factory mounted.

OIL PAN – Deep sump type. 190 gallon (719 L) capacity including filter and cooler.

PAINT – Oilfield orange primer.

PISTONS – Aluminum with floating pin. Oil cooled.

SHIPPING SKID – For domestic truck or rail.

TURBOCHARGERS – Two, dry type. Wastegate controlled.

VIBRATION DAMPER – Two, viscous type. Guard included with remote mounted radiator or no radiator.

WATER CIRCULATING SYSTEM, AUXILIARY CIRCUIT – Belt driven water circulating high capacity pump for intercooler and lube oil cooler. See S6543-38 performance curve for use with standard 10" diameter crankshaft pulley. Includes thermostatic valve.

WATER CIRCULATING SYSTEM, ENGINE JACKET – Belt driven water circulating pump, cluster type thermostatic temperature regulating valve, full flow bypass type. Flange connections and mating flanges for (2) 4" (102 mm) inlets and (1) 5" (127 mm) outlet.

SPECIFICATIONS

Cylinders
V-12

Piston Displacement
7040 cu. in.
(116 L)

Bore & Stroke
9.375" x 8.5"
(238 x 216 mm)

Compression Ratio
10.5:1

Jacket Water System Capacity
107 gal
(405 L)

Lube Oil Capacity
190 gal
(719 L)

Starting System
125 - 150 psi air/gas
24/32V electric

Dry Weight
21,000 lb
(9525 kg)

POWER RATINGS: L7042GL VHP® GAS ENGINES

Model	I.C. Water Inlet Temp. °F (°C) (Tcra)	C.R.	Brake Horsepower (kWb Output) 800 rpm	900 rpm	1000 rpm	1100 rpm	1200 rpm
L7042GL	85° (29°)	10.5:1	928 (692)	1160 (865)	1289 (961)	1418 (1057)	1547 (1154)
L7042GL	130° (54°)	10.5:1	886 (661)	1110 (828)	1233 (919)	1357 (1012)	1480 (1104)

Rating Standard: All models: Ratings are based on ISO 3046/1-1995 with mechanical efficiency of 90% and auxiliary water temperature Tcra (clause 10.1) as specified above limited to ± 10° F (± 5° C). Ratings are also valid for SAE J1349, BS5514, DIN6271 and AP17B-11C standard atmospheric conditions.

ISO Standard Power/Continuous Power Rating: The highest load and speed which can be applied 24 hours a day, seven days a week, 365 days per year except for normal maintenance. It is permissible to operate the engine at up to 10% overload, or maximum load indicated by the intermittent rating, whichever is lower, for two hours in each 24 hour period.

All natural gas engine ratings are based on a fuel of 900 Btu/ft³ (35.3 MJ/nm³) SLHV value, with a 91 Waukesha Knock Index®.

For conditions or fuels other than standard, contact the Waukesha Engine Sales Engineering Department.

PERFORMANCE: L7042GL VHP® GAS ENGINES

English		130° F ICW		85° F ICW	
NO_x Settings	RPM	1200	1000	1200	1000
1.5 g NO_x	Power (Bhp)	1480	1233	1547	1289
	BSFC (Btu/bhp-hr)	7135	6850	7160	6865
	NOx (grams/bhp-hr)	1.50	1.50	1.50	1.50
	CO (grams/bhp-hr)	2.65	2.65	2.65	2.65
	NMHC (grams/bhp--hr)	0.70	0.80	0.80	0.90

Metric		54° C ICW		29° C ICW	
NO_x Settings	RPM	1200	1000	1200	1000
1.5 g NO_x	Power (kWb)	1104	919	1154	962
	BSFC (kJ/kW-hr)	10089	9686	10124	9707
	NOx (g/nm³)	0.62	0.62	0.62	0.62
	CO (g/nm³)	1.09	1.09	1.09	1.09
	NMHC (g/nm³)	0.29	0.41	0.33	0.37

NOTES:

1) Fuel consumption and exhaust emissions are based on ISO 3046/1-1995 standard reference conditions and commercial quality natural gas of 900 Btu/ft³ (35.38 MJ/m³ [25, V(0; 101.325)]) saturated lower heat value, Waukesha Knock Index® of 91 and 93% methane content by volume. ISO 3046/1-1995 standard reference conditions are 77°F (25°C) ambient temperature, 29.54 inches Hg (100 kPa) barometric pressure, 30% relative humidity (1kPa/0.3 inches Hg water vapor pressure).
2) S.I. exhaust emissions are corrected to 5% O_2 (0°C and 101.325 kPa).
3) Data will vary due to variations in site conditions. For conditions and/or fuels other than standard, consult the Waukesha Engine Sales Engineering Department.
4) Fuel consumption based on ISO 3046/1-1995 with a +5% tolerance for commercial quality natural gas having a 900 Btu/ft³ saturated low heat valve

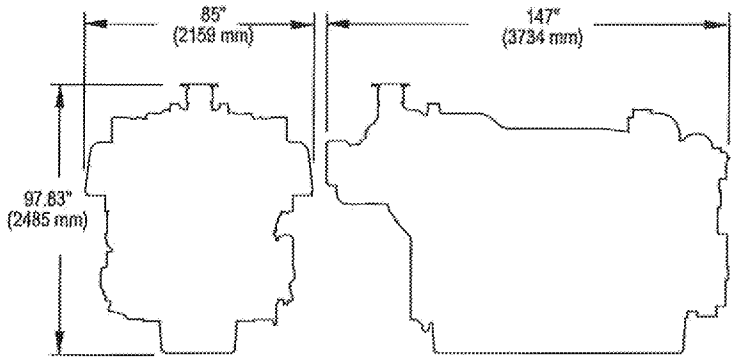

DRESSER
Waukesha

WAUKESHA ENGINE
DRESSER, INC.
1101 West St. Paul Avenue
Waukesha, WI 53188-4999
Phone: (262) 547-3311 Fax: (262) 549-2795
waukeshaengine.dresser.com

Bulletin 7005 0107

Consult your local Waukesha Distributor for system application assistance. The manufacturer reserves the right to change or modify without notice, the design or equipment specifications as herein set forth without incurring any obligation either with respect to equipment previously sold or in the process of construction except where otherwise specifically guaranteed by the manufacturer.

Waukesha, VHP, Series Four, Microspin, ESM, and Waukesha Knock Index are trademarks/registered trademarks of Waukesha Engine, Dresser, Inc. © 2007 Dresser, Inc. All Rights Reserved

Engine Exhaust Emissions Calculations

Unit Number: Gen
Description: Emergency generator, Waukesha RoiLine H884U
Type: Four Stroke Rich Burn (Naturally Aspirated)

Note: The data on this worksheet applies to each individual emissions unit identified above.

Horsepower Calculations

6,950	ft above MSL	Elevation	
180	hp	Nameplate hp	From previous applications
500	hr/yr	Annual operating time	Williams Four Corners LLC

Steady-State Emission Rates

Pollutants	Emission Factors, lb/hp-hr	Uncontrolled Emission Rates, pph	tpy
NOX	2.20E-02	3.96	0.99
CO	1.90E-02	3.42	0.86
VOC	3.09E-04	0.056	0.014

Emission factors taken from AP-42 Section 3.2, Table 3.2-2, 7/00
Uncontrolled Emission Rates (pph) = g/hp-hr x Mfg. Site-rated hp / 453.6 g/lb
Uncontrolled Emission Rates (tpy) = Uncontrolled Emission Rates (pph) x hr/yr / 2,000 lb/ton
SO2 and Particulate (PM10 & PM2.5) emissions are assumed negligible

Table 3.2-2 (English Units). CRITERIA EMISSION FACTORS FOR UNCONTROLLED NATURAL GAS PRIME MOVERS[a]

EMISSION FACTOR RATING: A (except as noted)

Pollutant	Gas Turbines (SCC 2-02-002-01)		2-Cycle Lean Burn (SCC 2-02-002-52)		4-Cycle Lean Burn (SCC 2-02-002-53)		4-Cycle Rich Burn (SCC 2-02-002-54)	
	lb/hp-hr (power output)	lb/MMBtu (fuel input)	lb/hp-hr (power output)	lb/MMBtu (fuel input)	lb/hp-hr (power output)	lb/MMBtu (fuel input)	lb/hp-hr (power output)	lb/MMBtu (fuel input)
NO_x	2.87 E-03	0.34	0.024	2.7	0.026	3.2	0.022	2.3
CO	1.83 E-03	0.17	3.31 E-03	0.38	3.53 E-03	0.42	0.019	1.6
CO_2[b]	0.89	110	0.89	110	0.89	110	0.89	110
TOC	3.97 E-04	0.053	0.013	1.5	0.011	1.2	2.65 E-03	0.27
TNMOC	2.20 E-05	0.002	9.48 E-04	0.11	1.59 E-03	0.18	3.09 E-04	0.03
CH_4	3.75 E-04	0.051	0.012	1.4	9.04 E-03	1.1	2.43 E-03	0.24

[a] References 1-5. Factors are based on entire population. Factors for individual engines from specific manufacturers may vary. SCC = Source Classification Code. TNMOC = total nonmethane organic compounds.

[b] EMISSION FACTOR RATING: B. Based on 100% conversion of the fuel carbon to CO_2. CO_2 [lb/MMBtu] = 3.67*C/E, where C = carbon content of fuel by weight (0.75), and E = energy content of fuel, 0.0239 MMBtu/lb. The uncontrolled CO_2 emission factors are also applicable to natural gas prime movers controlled by combustion modifications, NSCR, and SCR.

ED_004016Q_00001128-00030

Storage Tank Emissions Data and Calculations

Unit Number: Storage tanks
Description: Storage tank emissions summary

Source	Description	Uncontrolled Working / Breathing (W/B) Losses (TANKS) (lb/yr)	Uncontrolled Working / Breathing (W/B) Losses (TANKS) (ton/yr)	Uncontrolled Flash Emissions (HYSYS or VMGSim) (ton/yr)	Total Uncontrolled Emissions (ton/yr)
Tank T11	Condensate Storage Tank (100 bbl)				
VOC	*(including flash emissions)*	2,046.82	1.02	9.05	10.08
Benzene		4.05	2.03E-03	3.58E-02	3.78E-02
Ethylbenzene		0.13	6.50E-05	1.04E-03	1.10E-03
n-Hexane		93.76	4.69E-02	0.22532	0.27
Toluene		0	0	0	0
Xylenes		0.14	7.00E-05	1.10E-03	1.17E-03
2,2,4 Trimethylpentane		0.35	1.75E-04	2.12E-03	2.29E-03
Tank T12	Condensate Storage Tank (100 bbl)				
VOC	*(no flash emissions as this tank*	2,046.82	1.02	0	1.02
Benzene	*is an overflow tank for T-11)*	4.05	2.03E-03	0	2.03E-03
Ethylbenzene		0.13	6.50E-05	0	6.50E-05
n-Hexane	*assume throughput = Tank T-11*	93.76	4.69E-02	0	4.69E-02
Toluene		0	0	0	0
Xylenes		0.14	7.00E-05	0	7.00E-05
2,2,4 Trimethylpentane		0.35	1.75E-04	0	1.75E-04

Bryan Research & Engineering, Inc.

ProMax® 3.2

with

TSWEET® & PROSIM®

Copyright © BRE Group, Ltd. 2002-2013 All Rights Reserved.

Simulation Report

Project: Ojito Tank Flash 4-5-2017.pmx

Licensed to Williams Midstream Natural Gas Liquids, Inc. and Customer's Org

Client Name: Williams
Location: Ojito
Job: Permit Application

ProMax Filename: C:\Users\khong\Desktop\Ojito Tank Flash 4-5-2017.pmx
ProMax Version: 3.2.13330.0
Simulation Initiated: 4/5/2017 9:19:18 AM

Bryan Research & Engineering, Inc.
Chemical Engineering Consultants
P.O. Box 4747 Bryan, Texas 77805
Office: (979) 776-5220
FAX: (979) 776-4818
mailto:sales@bre.com
http://www.bre.com/

Report Navigator can be activated via the ProMax Navigator Toolbar.
An asterisk (*), throughout the report, denotes a user specified value.
A question mark (?) after a value, throughout the report, denotes an extrapolated or approximate value

Ojito Condensate Flash Emissions

Stream FG from Tanks C3+ Mass Flow =9.053 ton/yr

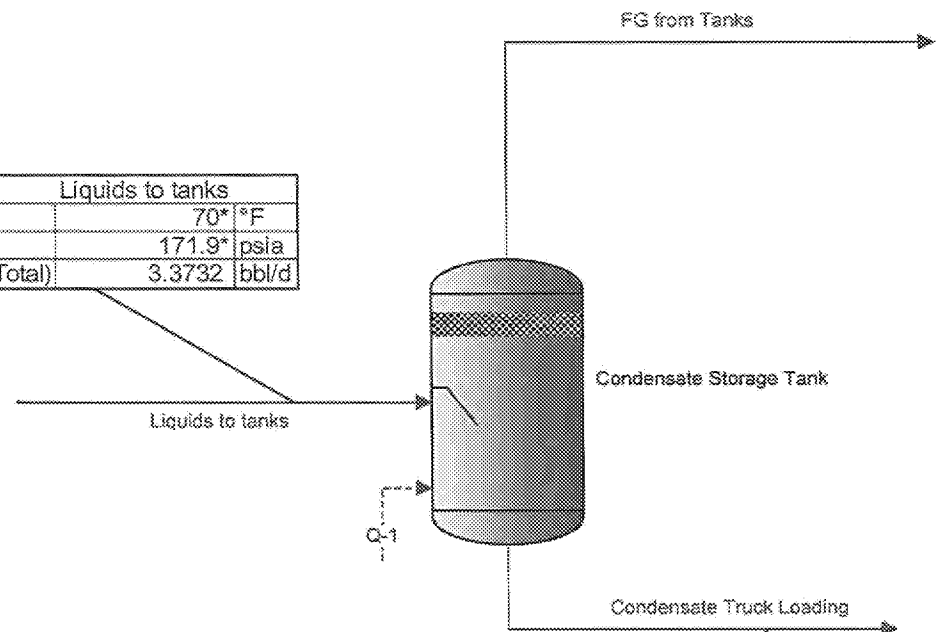

Properties	Liquids to tanks	
Temperature(Total)	70*	°F
Pressure(Total)	171.9*	psia
Std Liquid Volumetric Flow(Total)	3.3732	bbl/d

Properties	Condensate Truck Loading	
Temperature(Total)	65	°F
Pressure(Total)	11.9	psia
Std Liquid Volumetric Flow(Total)	3*	bbl/d

Process Streams	Condensate Truck Loading	FG from Tanks	Liquids to tanks
Composition Status:	Solved	Solved	Solved
Phase: **Total** From Block:	Condensate Storage Tank	Condensate Storage Tank	--
To Block:	--	--	Condensate Storage Tank
Mass Fraction			
Nitrogen	0	0	0*
Methane	0.000166370	0.0914968	0.00763299*
Carbon Dioxide	3.82082E-05	0.00733059	0.000634389*
Ethane	0.00156936	0.130823	0.0121353*
Propane	0.0111280	0.251921	0.0307383*
Isobutane	0.0105982	0.0886366	0.0170762*
n-Butane	0.0305820	0.179439	0.0427609*
Isopentane	0.0383959	0.0833232	0.0420669*
n-Pentane	0.0421173	0.0668702	0.0441410*
Isohexane	0.0537157	0.0334483	0.0520587*
n-Hexane	0.0434105	0.0191722	0.0414289*
2,2,4-Trimethylpentane	0.00117465	0.000180290	0.00109353*
Benzene	0.00681456	0.00304708	0.00650865*
Heptane	0.226503	0.0315078	0.210562*
Toluene	0	0	0*
Octane	0.263246	0.0108546	0.233413*
Ethylbenzene	0.00243479	8.82787E-05	0.00224280*
m-Xylene	0.00312129	9.387785-05	0.00287379*
Nonane	0.0586095	0.000762392	0.0548000*
C10	0.215367	0.000885707	0.197632*
Mass Flow	lb/h	lb/h	lb/h
Nitrogen	0	0	0*
Methane	0.00501389	0.245503	0.250617*
Carbon Dioxide	0.00115148	0.0196684	0.0208208*
Ethane	0.0472958	0.351022	0.398317*
Propane	0.335305	0.673536	1.00884*
Isobutane	0.319398	0.241048	0.560446*
n-Butane	0.921955	0.481469	1.40342*
Isopentane	1.15714	0.223572	1.38071*
n-Pentane	1.26929	0.179425	1.44872*
Isohexane	1.61883	0.0897481	1.70856*
n-Hexane	1.30827	0.0514427	1.35971*
2,2,4-Trimethylpentane	0.0354066	0.000483510	0.0358901*
Benzene	0.205371	0.00817588	0.213547*
Heptane	6.82615	0.0845413	6.91070*
Toluene	0	0	0*
Octane	7.63208	0.0285884	7.66087*
Ethylbenzene	0.0733775	0.000236868	0.0735144*
m-Xylene	0.0940666	0.000251892	0.0943185*
Nonane	1.79646	0.00209930	1.79855*
C10	6.49053	0.00237692	6.49291*
Mole Fraction			
Nitrogen	0	0	0*
Methane	0.00109038	0.240640	0.04324*
Carbon Dioxide	9.79930E-05	0.00702791	0.00131*
Ethane	0.00528621	0.183568	0.03668*
Propane	0.0255585	0.240186	0.06335*
Isobutane	0.0184684	0.0652148	0.0257*
n-Butane	0.0533099	0.130258	0.06686*
Isopentane	0.0539011	0.0487271	0.05299*
n-Pentane	0.0591253	0.0391055	0.0556*
Isohexane	0.0631334	0.0163766	0.0549*
n-Hexane	0.0510215	0.00938692	0.04369*
2,2,4-Trimethylpentane	0.00104172	6.555005-05	0.00087*
Benzene	0.00883814	0.00164569	0.00757*
Heptane	0.228950	0.0132671	0.19037*
Toluene	0	0	0*
Octane	0.224548	0.00393549	0.1857*
Ethylbenzene	0.00232286	3.50639E-05	0.00192*
m-Xylene	0.00297779	3.73092E-05	0.00246*
Nonane	0.0470740	0.000257385	0.03953*
C10	0.153310	0.000282548	0.12636*

Process Streams	Condensate Truck Loading	FG from Tanks	Liquids to tanks
Properties Status:	Solved	Solved	Solved
Phase: **Total** From Block:	Condensate Storage Tank	Condensate Storage Tank	--
To Block:	--	--	Condensate Storage Tank
Property Units			
Temperature °F	65	65*	70*
Pressure psia	11.9	11.9*	171.9*
Molecular Weight lb/lbmol	101.284	42.1924	90.8760
Mass Density lb/ft^3	43.1053	0.0903139	42.0628
Molar Flow lbmol/h	0.297550	0.0635942	0.361144
Mass Flow lb/h	30.1371	2.68319	32.8203
Liquid Volumetric Flow gpm		3.70405	0.0972802
Std Liquid Volumetric Flow sgpm	0.0875*	0.0108837	0.0983837
Vapor Volumetric Flow ft^3/h		29.7096	0.780269
Std Vapor Volumetric Flow MMSCFD	0.00270997	0.000579192	0.00328917

Certificate of Analysis

Number: 2030-16060333-001A

Carencro Laboratory
4790 NE Evangeline Thruway
Carencro, LA 70520
Phone 337-896-3055

Williams Field Services
Williams Field Services
c/o Alpha Bioscience Company
2030 Afton Place
Farmington, NM 87401

July 05, 2016

Field:
Station Name: ENH Reiever
Station Location: RIO Arriba Co, NM
Sample Point:
Analyzed: 07/05/2016 15:11:50 by GR

Sampled By: MM-GAS
Sample Of: Liquid Spot
Sample Date: 06/23/2016 12:30
Sample Conditions: 150 psig, @ 77 °F
Method: GPA-2186M/GPA-2103
Cylinder No: 577

Analytical Data

Components	Mol. %	MW	Wt. %	Sp. Gravity	L.V. %
Nitrogen	NIL	28.013	NIL	0.807	NIL
Methane	4.324	16.043	0.805	0.300	1.836
Carbon Dioxide	0.131	44.010	0.067	0.817	0.056
Ethane	3.668	30.069	1.280	0.356	2.458
Propane	6.335	44.096	3.242	0.507	4.372
Iso-Butane	2.670	58.122	1.801	0.563	2.189
n-Butane	6.686	58.122	4.510	0.584	5.280
Iso-Pentane	5.299	72.149	4.437	0.625	4.855
n-Pentane	5.560	72.149	4.656	0.631	5.049
i-Hexanes	5.490	84.675	5.394	0.669	5.517
n-Hexane	4.369	86.175	4.370	0.664	4.501
2,2,4-Trimethylpentane	0.087	114.231	0.115	0.697	0.113
Benzene	0.757	78.114	0.686	0.885	0.530
Heptanes	19.097	94.554	20.956	0.720	19.909
Toluene	NIL	NIL	NIL	NIL	NIL
Octanes	18.570	108.620	23.412	0.734	21.835
Ethylbenzene	0.192	106.167	0.237	0.872	0.186
Xylenes	0.246	106.167	0.303	0.885	0.234
Nonanes	3.883	123.996	5.591	0.753	5.081
Decanes Plus	12.636	123.673	18.138	0.775	15.999
	100.000		100.000		100.000

Calculated Physical Properties	Total	C10+
Specific Gravity at 60°F	0.6840	0.7753
API Gravity at 60°F	75.369	51.010
Molecular Weight	86.161	123.673
Pounds per Gallon (in Vacuum)	5.703	6.464
Pounds per Gallon (in Air)	5.696	6.457
Cu. Ft. Vapor per Gallon @ 14.73 psia	25.058	19.788

Hydrocarbon Laboratory Manager

Quality Assurance: The above analyses are performed in accordance with ASTM, UOP, GPA guidelines for quality assurance, unless otherwise stated.

Certificate of Analysis

Number: 2030-16060333-001A

Carencro Laboratory
4790 NE Evangeline Thruway
Carencro, LA 70520
Phone 337-896-3055

Williams Field Services
Williams Field Services
c/o Alpha Bioscience Company
2030 Afton Place
Farmington, NM 87401

July 05, 2016

Field:
Station Name: ENH Reiever
Station Location: RIO Arriba Co, NM
Sample Point:
Analyzed: 07/05/2016 15:11:50 by GR

Sampled By: MM-GAS
Sample Of: Liquid Spot
Sample Date: 06/23/2016 12:30
Sample Conditions: 150 psig, @ 77 °F
Method: GPA-2186M/GPA-2103
Cylinder No: 577

Analytical Data

Components	Mol. %	MW	Wt. %	Sp. Gravity	L.V. %
Nitrogen	NIL	28.013	NIL	0.807	NIL
Carbon Dioxide	0.131	44.010	0.067	0.817	0.056
Methane	4.324	16.043	0.805	0.300	1.836
Ethane	3.668	30.069	1.280	0.356	2.458
Propane	6.335	44.096	3.242	0.507	4.372
Iso-butane	2.670	58.122	1.801	0.563	2.189
n-Butane	6.686	58.122	4.510	0.584	5.280
Iso-pentane	5.299	72.149	4.437	0.625	4.855
n-Pentane	5.560	72.149	4.656	0.631	5.049
Hexanes	9.859	85.340	9.764	0.667	10.018
Heptanes Plus	55.468	107.856	69.438	0.744	63.887
	100.000		100.000		100.000

Calculated Physical Properties	Total	C7+
Specific Gravity at 60°F	0.6840	0.7436
API Gravity at 60°F	75.369	58.801
Molecular Weight	86.161	107.856
Pounds per Gallon (in Vacuum)	5.703	6.199
Pounds per Gallon (in Air)	5.696	6.192
Cu. Ft. Vapor per Gallon @ 14.73 psia	25.058	21.761

Hydrocarbon Laboratory Manager

Quality Assurance: The above analyses are performed in accordance with ASTM, UOP, GPA guidelines for quality assurance, unless otherwise stated.

Certificate of Analysis

Number: 2030-16060333-001A

Carencro Laboratory
4790 NE Evangeline Thruway
Carencro, LA 70520
Phone 337-896-3055

Williams Field Services
Williams Field Services
c/o Alpha Bioscience Company
2030 Afton Place
Farmington, NM 87401

July 05, 2016

Field:
Station Name: ENH Reiever
Station Location: RIO Arriba Co, NM
Sample Point:

Sampled By: MM-GAS
Sample Of: Liquid Spot
Sample Date: 06/23/2016 12:30
Sample Conditions: 150 psig, @ 77 °F
Cylinder No: 577

Analytical Data

Test	Method	Result	Units	Detection Limit	Lab Tech.	Analysis Date
Color Visual	Proprietary	Water White			GR	07/05/2016
API Gravity @ 60° F	ASTM D-5002	66.68	°		GR	07/05/2016
Specific Gravity @ 60/60° F	ASTM D-5002	0.7140			GR	07/05/2016
Density @ 60° F	ASTM D-5002	0.7133	g/ml		GR	07/05/2016
Shrinkage Factor	Proprietary	0.9110			GR	07/05/2016
Flash Factor	Proprietary	161.3567	Cu. Ft./S.T. Bbl		GR	07/05/2016

Patti L. Petro

Hydrocarbon Laboratory Manager

Quality Assurance: The above analyses are performed in accordance with ASTM, UOP, GPA guidelines for quality assurance, unless otherwise stated.

TANKS 4.0.9d
Emissions Report - Detail Format
Tank Indentification and Physical Characteristics

Identification

User Identification:	Ojito T-11 & T-12
City:	Bloomfield
State:	NM
Company:	Williams
Type of Tank:	Vertical Fixed Roof Tank
Description:	Ojito 100 bbl condensate tanks T-11 & T-12

Tank Dimensions

Shell Height (ft):	14.00
Diameter (ft):	7.00
Liquid Height (ft) :	14.00
Avg. Liquid Height (ft):	7.00
Volume (gallons):	4,200.00
Turnovers:	10.95
Net Throughput(gal/yr):	45,990.00
Is Tank Heated (y/n):	N

Paint Characteristics

Shell Color/Shade:	Gray/Light
Shell Condition	Good
Roof Color/Shade:	Gray/Light
Roof Condition:	Good

Roof Characteristics

Type:	Dome
Height (ft)	0.00
Radius (ft) (Dome Roof)	7.00

Breather Vent Settings

Vacuum Settings (psig):	-0.03
Pressure Settings (psig)	0.03

Meterological Data used in Emissions Calculations: Albuquerque, New Mexico (Avg Atmospheric Pressure = 12.15 psia)

ED_004016Q_00001128-00038

TANKS 4.0.9d
Emissions Report - Detail Format
Liquid Contents of Storage Tank

Ojito T-11 & T-12 - Vertical Fixed Roof Tank
Bloomfield, NM

Mixture/Component	Month	Daily Liquid Surf. Temperature (deg F) Avg.	Min.	Max.	Liquid Bulk Temp (deg F)	Vapor Pressure (psia) Avg.	Min.	Max.	Vapor Mol. Weight.	Liquid Mass Fract.	Vapor Mass Fract.	Mol. Weight	Basis for Vapor Pressure Calculations
Ojito 07-05-15	All	64.94	53.24	76.64	59.39	7.1183	5.5430	8.8667	62.5281			96.09	
2,2,4-Trimethylpentane (isooctane)						0.6857	0.4887	0.9450	114.2300	0.0012	0.0002	114.23	Option 2: A=6.8118, B=1257.84, C=220.74
Benzene						1.3372	0.9653	1.8208	78.1100	0.0069	0.0020	78.11	Option 2: A=6.905, B=1211.033, C=220.79
Decane (-n)						0.0374	0.0266	0.0489	142.2900	0.1814	0.0015	142.29	Option 1: VP60 = .033211 VP70 = .041782
Ethylbenzene						0.1266	0.0854	0.1894	106.1700	0.0024	0.0001	106.17	Option 2: A=6.975, B=1424.255, C=213.21
Heptane (-n)						0.7080	0.4891	0.9910	100.2000	0.2056	0.0320	100.20	Option 3: A=37358, B=6.2565
Hexane (-n)						2.1727	1.6003	2.9030	86.1700	0.0976	0.0458	86.17	Option 2: A=6.876, B=1171.17, C=224.41
i-butane						28.6704	23.0459	35.2667	58.1300	0.0450	0.2785	58.13	Option 1: VP60 = 25.098 VP70 = 31.306
Isopentane						11.2522	8.5748	14.3816	72.1500	0.0444	0.1078	72.15	Option 1: VP60 = 10.005 VP70 = 12.53
n-butane						28.6704	23.0459	35.2667	58.1300	0.0721	0.4462	58.13	Option 1: VP60 = 25.098 VP70 = 31.306
Nonane (-n)						0.0741	0.0558	0.0981	128.2600	0.0559	0.0009	128.26	Option 1: VP60 = .065278 VP70 = .08309
Octane (-n)						0.1666	0.1231	0.2250	114.2300	0.2341	0.0084	114.23	Option 1: VP60 = .145444 VP70 = .188224
Pentane (-n)						7.6199	5.8716	9.7769	72.1500	0.0466	0.0768	72.15	Option 3: A=27891, B=7.558
Xylenes (mixed isomers)						0.1073	0.0710	0.1586	106.1700	0.0030	0.0001	106.17	Option 2: A=7.009, B=1462.266, C=215.11

TANKS 4.0.9d
Emissions Report - Detail Format
Detail Calculations (AP-42)

Ojito T-11 & T-12 - Vertical Fixed Roof Tank
Bloomfield, NM

Annual Emission Calcaulations	
Standing Losses (lb):	1,359.5769
Vapor Space Volume (cu ft):	287.8693
Vapor Density (lb/cu ft):	0.0790
Vapor Space Expansion Factor:	0.7176
Vented Vapor Saturation Factor:	0.3617
Tank Vapor Space Volume:	
Vapor Space Volume (cu ft):	287.8693
Tank Diameter (ft):	7.0000
Vapor Space Outage (ft):	7.4801
Tank Shell Height (ft):	14.0000
Average Liquid Height (ft):	7.0000
Roof Outage (ft):	0.4801
Roof Outage (Dome Roof)	
Roof Outage (ft):	0.4801
Dome Radius (ft):	7.0000
Shell Radius (ft):	3.5000
Vapor Density	
Vapor Density (lb/cu ft):	0.0790
Vapor Molecular Weight (lb/lb-mole):	62.5281
Vapor Pressure at Daily Average Liquid Surface Temperature (psia):	7.1163
Daily Avg. Liquid Surface Temp. (deg. R):	524.6094
Daily Average Ambient Temp. (deg. F):	56.1542
Ideal Gas Constant R (psia cuft / (lb-mol-deg R)):	10.731
Liquid Bulk Temperature (deg. R):	518.0642
Tank Paint Solar Absorptance (Shell):	0.5400
Tank Paint Solar Absorptance (Roof):	0.5400
Daily Total Solar Insulation Factor (Btu/sqft day):	1,765.3167
Vapor Space Expansion Factor	
Vapor Space Expansion Factor:	0.7176
Daily Vapor Temperature Range (deg. R):	46.7876
Daily Vapor Pressure Range (psia):	3.2237
Breather Vent Press. Setting Range(psia):	0.0600
Vapor Pressure at Daily Average Liquid Surface Temperature (psia):	7.1163
Vapor Pressure at Daily Minimum Liquid Surface Temperature (psia):	5.5439
Vapor Pressure at Daily Maximum Liquid Surface Temperature (psia):	8.8667
Daily Avg. Liquid Surface Temp. (deg R):	524.6094
Daily Min. Liquid Surface Temp. (deg R):	512.9100
Daily Max. Liquid Surface Temp. (deg R):	536.3088
Daily Ambient Temp. Range (deg. R):	27.9250
Vented Vapor Saturation Factor	
Vented Vapor Saturation Factor:	0.3617
Vapor Pressure at Daily Average Liquid: Surface Temperature (psia):	7.1163
Vapor Space Outage (ft):	7.4801
Working Losses (lb):	487.3418

Vapor Molecular Weight (lb/lb-mole):	62.6281
Vapor Pressure at Daily Average Liquid Surface Temperature (psia):	7.1183
Annual Net Throughput (gal/yr.):	45,990.0000
Annual Turnovers:	10.9500
Turnover Factor:	1.0000
Maximum Liquid Volume (gal):	4,200.0000
Maximum Liquid Height (ft):	14.0000
Tank Diameter (ft):	7.0000
Working Loss Product Factor:	1.0000

Total Losses (lb):	2,046.8186

TANKS 4.0.9d
Emissions Report - Detail Format
Individual Tank Emission Totals

Emissions Report for: Annual

Ojito T-11 & T-12 - Vertical Fixed Roof Tank
Bloomfield, NM

	Losses(lbs)		
Components	Working Loss	Breathing Loss	Total Emissions
n-butane	217.40	695.87	913.27
Isopentane	52.53	168.14	220.67
Pentane (-n)	37.33	119.48	156.81
Hexane (-n)	22.32	71.44	93.76
Ojito 07-05-16	487.24	1,559.58	2,046.82
i-butane	135.68	434.30	569.98
Heptane (-n)	15.61	49.97	65.58
Octane (-n)	4.10	13.13	17.24
Nonane (-n)	0.44	1.39	1.83
Decane (-n)	0.71	2.29	3.00
2,2,4-Trimethylpentane (isooctane)	0.08	0.27	0.35
Benzene	0.97	3.09	4.05
Ethylbenzene	0.03	0.10	0.13
Xylenes (mixed isomers)	0.03	0.11	0.14

Equipment Leaks Emissions Calculations

Unit Number: F1
Description: Valves, Connectors, Seals & Open-Ended Lines

Steady-State Emission Rates

Equipment	Number of Components, # of sources	Emission Factors, kg/hr/source	Emission Factors, lb/hr/source	Uncontrolled TOC Emission Rates, pph	tpy
Valves	252	0.0045	0.0099	2.49	10.93
Connectors	187	0.0002	0.0004	0.08	0.36
Pump Seals	0	0.0024	0.0053	0.00	0.00
Compressor Seals	28	0.0088	0.0194	0.54	2.37
Pressure Relief Valves	13	0.0088	0.0194	0.25	1.10
Open-Ended Lines	73	0.0020	0.0044	0.32	1.41
Total				3.69	16.17

Number of components based on the numbers of compressors and dehydrators at the station (see next page)
Emission factors taken from the EPA "1995 Protocol for Equipment Leak Emission Estimates"
Emission factors (lb/hr/source) = Emission factors (kg/hr/source) x 2.2 lb/kg
Uncontrolled TOC Emission Rates (pph) = lb/hr/source x # of sources
Uncontrolled TOC Emission Rates (tpy) = Uncontrolled TOC Emission Rates (pph) x 8,760 hr/yr / 2,000 lb/ton

Components	Mole Percents, %	Molecular Weights, lb/lb-mole	Component Weights, lb/lb-mole	Weight Percent of TOC, %	Uncontrolled Emission Rates, pph	tpy
Carbon dioxide	0.5808	44.010				
Hydrogen sulfide	0.0000	34.070				
Nitrogen	0.7255	28.013				
Methane	78.1110	16.043	1253.135	59.641		
Ethane	10.6480	30.070	326.199	15.525		
Propane	5.5588	44.097	245.126	11.666	4.31E-01	1.89
Isobutane	0.9025	58.123	52.456	2.497	9.22E-02	0.40
n-Butane	1.4859	58.123	86.365	4.110	1.52E-01	0.66
Isopentane	0.5070	72.150	36.580	1.741	6.43E-02	0.28
n-Pentane	0.3935	72.150	28.391	1.351	4.99E-02	0.22
Cyclopentane	0.0274	70.134	1.922	0.091	3.38E-03	1.48E-02
n-Hexane	0.1177	86.177	10.143	0.483	1.78E-02	0.08
Cyclohexane	0.0559	84.161	4.705	0.224	8.27E-03	3.62E-02
Other hexanes	0.2016	86.177	17.373	0.827	3.05E-02	0.13
Heptanes	0.2047	100.204	20.512	0.976	3.60E-02	0.16
Methylcyclohexane	0.0588	98.188	5.773	0.275	1.01E-02	4.44E-02
2,2,4-Trimethylpentane	0.0010	114.231	0.114	0.005	2.01E-04	8.79E-04
Benzene	0.0198	78.114	1.547	0.074	2.72E-03	1.19E-02
Toluene	0.0267	92.141	2.460	0.117	4.32E-03	1.89E-02
Ethylbenzene	0.0008	106.167	0.085	0.004	1.49E-04	6.54E-04
Xylenes	0.0059	106.167	0.626	0.030	1.10E-03	4.82E-03
C8+ Heavies	0.0667	114.231	7.619	0.363	1.34E-02	5.86E-02
Total	100.0000		2101.132			
Total VOC				24.834	9.17E-01	4.02

Gas stream composition obtained from Ojito extended gas analysis dated 8/1/16
Component Weights (lb/lb-mole) = (% / 100) * Molecular Weights (lb/lb-mole)
Weight Percent of TOC (%) = 100 x Component Weights (lb/lb-mole) / Total Component Weight (lb/lb-mole)
Uncontrolled Emission Rates (pph) = Total Uncontrolled TOC Emission Rate (pph) x (% / 100)
Uncontrolled Emission Rates (tpy) = Total Uncontrolled TOC Emission Rate (tpy) x (% / 100)

Equipment Leaks Emissions Calculations

Unit Number: F1
Description: Valves, Connectors, Seals & Lines

Number of Compression Units at the Facility: 1
Number of Dehydrators at the Facility: 0

Process Equipment Description	Equipment Count						Instrument Count		
	Valves	Connectors	Pump Seals	Compressor Seals	Pressure Relief Valves	Open-end	Flow	Level	Pressure
Station inlet, meter run to pulsation dampener	17	14	0	0	1	13	3	0	3
Pulsation dampener	12	8	0	0	0	2	0	4	1
Compressor suction header	7	4	0	0	0	3	0	0	1
Suction header feed to instrument gas header	3	1	0	0	0	1	0	0	0
Compressor discharge header and bypass to station discharge	6	5	0	0	0	3	0	1	1
Compressor discharge header and suction header bypass lines	4	2	0	0	0	2	0	0	1
Fuel gas header	2	2	0	0	1	2	0	0	1
Instrument gas header	2	2	0	0	1	2	0	0	0
Station discharge header	9	5	0	0	1	6	0	0	2
Fuel gas recovery header	2	2	0	0	1	2	0	0	0
Fuel gas feed and filter loop	15	9	0	0	0	1	0	4	1
Instrument gas feed and filter loop	9	11	0	0	0	3	0	0	0
Produced water storage tank	1	0	0	0	0	1	0	1	0
ESD panel	12	0	0	0	0	0	0	0	0
Starting gas header	6	2	0	0	1	3	0	0	0
Hot gas header	2	2	0	0	0	2	0	0	0
Volume bottle lop	12	4	0	24	1	2	0	0	1
Components from Compressors	44	59	0	4	6	11	0	4	9
Components from dehydrators	0	0	0	0	0	0	0	0	0
Total	165	132	0	28	13	59	3	14	21
Adjusted Total	252	187	0	28	13	73			

The following additions are included in the Adjusted Total:

1 valve is added for each open end line
2 connectors are added for each flow meter
2 valves, 2 connectors and 1 open end line are added for each level gauge
1 connector is added for each pressure gauge

The component count is based on an evaluation of the Sim Mesa Compressor Station (two stage compression)

EPA-453/R-95-017

1995 Protocol for Equipment Leak Emission Estimates

Emission Standards Division

U.S. ENVIRONMENTAL PROTECTION AGENCY
Office of Air and Radiation
Office of Air Quality Planning and Standards
Research Triangle Park, North Carolina 27711

November 1995

TABLE 2-4. OIL AND GAS PRODUCTION OPERATIONS AVERAGE EMISSION FACTORS (kg/hr/source)

Equipment Type	Service[a]	Emission Factor (kg/hr/source)[b]
Valves	Gas	4.5E-03
	Heavy Oil	8.4E-06
	Light Oil	2.5E-03
	Water/Oil	9.8E-05
Pump seals	Gas	2.4E-03
	Heavy Oil	NA
	Light Oil	1.3E-02
	Water/Oil	2.4E-05
Others[c]	Gas	8.8E-03
	Heavy Oil	3.2E-05
	Light Oil	7.5E-03
	Water/Oil	1.4E-02
Connectors	Gas	2.0E-04
	Heavy Oil	7.5E-06
	Light Oil	2.1E-04
	Water/Oil	1.1E-04
Flanges	Gas	3.9E-04
	Heavy Oil	3.9E-07
	Light Oil	1.1E-04
	Water/Oil	2.9E-06
Open-ended lines	Gas	2.0E-03
	Heavy Oil	1.4E-04
	Light Oil	1.4E-03
	Water/Oil	2.5E-04

[a]Water/Oil emission factors apply to water streams in oil service with a water content greater than 50%, from the point of origin to the point where the water content reaches 99%. For water streams with a water content greater than 99%, the emission rate is considered negligible.

[b]These factors are for total organic compound emission rates (including non-VOC's such as methane and ethane) and apply to light crude, heavy crude, gas plant, gas production, and off shore facilities. "NA" indicates that not enough data were available to develop the indicated emission factor.

[c]The "other" equipment type was derived from compressors, diaphrams, drains, dump arms, hatches, instruments, meters, pressure relief valves, polished rods, relief valves, and vents. This "other" equipment type should be applied for any equipment type other than connectors, flanges, open-ended lines, pumps, or valves.

ED_004016Q_00001128-00046

Compressor Blowdown Emissions Calculations

Unit Number: SSM
Description: Compressor & Piping Associated With Station

Throughput

1	# of units	Number of units	Williams Four Corners LLC
200	events/yr/unit	Blowdowns per year per unit	Williams Four Corners LLC
3,250	scf/event	Gas loss per blowdown	Williams Four Corners LLC
650,000	scf/yr	Annual gas loss	# of units x events/yr/unit x scf/event

Emission Rates

Pollutants	Emission Factors, lb/scf	Uncontrolled, Emission Rates, tpy
VOC	1.374E-02	4.47
2,2,4-Trimethylpentane	2.641E-06	8.58E-04
Benzene	4.076E-05	1.32E-02
Ethylbenzene	2.239E-06	7.28E-04
n-Hexane	2.673E-04	8.69E-02
Toluene	6.484E-05	2.11E-02
Xylene	1.651E-05	5.37E-03

Emission factors calculated from gas composition (see table below)
Uncontrolled Emission Rates (tpy) = scf/yr x lb/scf / 2,000 lb/ton

Gas Composition

Components	Mole Percents, %	Molecular Weights, lb/lb-mole	Emission Factors, lb/scf
Carbon dioxide	0.6808	44.01	7.897E-04
Hydrogen sulfide	0.0000	34.07	0.000E+00
Nitrogen	0.7255	28.01	5.356E-04
Methane	78.1110	16.04	3.302E-02
Ethane	10.8480	30.07	8.598E-03
Propane	5.5588	44.09	6.460E-03
Isobutane	0.9025	58.12	1.383E-03
n-Butane	1.4859	58.12	2.276E-03
Isopentane	0.5070	72.15	9.642E-04
n-Pentane	0.3936	72.15	7.483E-04
Cyclopentane	0.0274	70.14	5.065E-05
n-Hexane	0.1177	86.17	2.673E-04
Cyclohexane	0.0559	84.16	1.240E-04
Other hexanes	0.2016	86.18	4.579E-04
Heptanes	0.2047	100.20	5.406E-04
Methylcyclohexane	0.0588	98.19	1.522E-04
2,2,4-Trimethylpentane	0.0010	100.21	2.641E-06
Benzene	0.0198	78.11	4.076E-05
Toluene	0.0267	92.14	6.484E-05
Ethylbenzene	0.0008	106.17	2.239E-06
Xylenes	0.0059	106.17	1.651E-05
C8+ Heavies	0.0667	110.00	1.934E-04
Total	100.0000		
Total VOC			1.374E-02

Gas stream composition obtained from Ojito extended gas analysis dated 8/1/16
Emission Factors (lb/scf) = (% / 100) x lb/lb-mole / 379.4 scf/lb-mole

Pig Launcher Emissions Calculations

Unit Number: PL
Description: Pig Launcher

Throughput

260	events/yr	Blowdowns per year	Williams Four Corners LLC
4,250	scf/event	Gas loss per blowdown	Williams Four Corners LLC
		2.43 mcf/blowdown + 1.82 mcf per purge	
1,105,000	scf/yr	Annual gas loss	events/yr x scf/event

Emission Rates

Pollutants	Emission Factors, lb/scf	Uncontrolled, Emission Rates, tpy
VOC	1.374E-02	7.59
2,2,4-Trimethylpentane	2.641E-06	1.46E-03
Benzene	4.076E-05	2.25E-02
Ethylbenzene	2.239E-06	1.24E-03
n-Hexane	2.673E-04	1.48E-01
Toluene	6.484E-05	3.58E-02
Xylene	1.651E-05	9.12E-03

Emission factors calculated from gas composition (see table below)
Uncontrolled Emission Rates (tpy) = scf/yr x lb/scf / 2,000 lb/ton

Gas Composition

Components	Mole Percents, %	Molecular Weights, lb/lb-mole	Emission Factors, lb/scf
Carbon dioxide	0.6808	44.01	7.897E-04
Hydrogen sulfide	0.0000	34.07	0.000E+00
Nitrogen	0.7255	28.01	5.356E-04
Methane	78.1110	16.04	3.302E-02
Ethane	10.8480	30.07	8.598E-03
Propane	5.5588	44.09	6.460E-03
Isobutane	0.9025	58.12	1.383E-03
n-Butane	1.4859	58.12	2.276E-03
Isopentane	0.5070	72.15	9.642E-04
n-Pentane	0.3935	72.15	7.483E-04
Cyclopentane	0.0274	70.14	5.065E-05
n-Hexane	0.1177	86.17	2.673E-04
Cyclohexane	0.0559	84.16	1.240E-04
Other hexanes	0.2018	86.18	4.579E-04
Heptanes	0.2047	100.20	5.406E-04
Methylcyclohexane	0.0588	98.19	1.522E-04
2,2,4-Trimethylpentane	0.0010	100.21	2.641E-06
Benzene	0.0198	78.11	4.076E-05
Toluene	0.0267	92.14	6.484E-05
Ethylbenzene	0.0008	106.17	2.239E-06
Xylenes	0.0069	106.17	1.651E-05
C8+ Heavies	0.0667	110.00	1.934E-04
Total	100.0000		
Total VOC			1.374E-02

Gas stream composition obtained from Ojito extended gas analysis dated 08/01/16
Emission Factors (lb/scf) = (% / 100) x lb/lb-mole / 379.4 scf/lb-mole

Truck Loading Emissions Calculations

Unit Number: F2
Description: Truck Loading

Emission Factor

0.6		Saturation factor, S	AP-42, Table 5.2-1 (submerged loading & dedicated service)
7.1163	psia	True vapor pressure of liquid, P	TANKS 4.0 output file
62.5281	lb/lb-mole	Molecular weight of vapors, M	TANKS 4.0 output file
64.94	°F	Temperature of liquid	TANKS 4.0 output file
524.61	°R	Temperature of liquid, T	°F + 459.67
6.34	lb/10^3 gal	Emission factor, L	AP-42, Section 5.2, Equation 1

$$L = 12.46 \frac{SPM}{T}$$

Production Rate

8.40	10^3 gal/hr	Maximum hourly production rate	Williams Four Corners LLC
46.20	10^3 gal/yr	Maximum annual production rate	Williams Four Corners LLC

Steady-State Emission Rates

Pollutant	Uncontrolled Emission Rates, pph	tpy
VOC	53.26	0.15

Uncontrolled Emission Rate (pph) = lb/10^3 gal x 10^3 gal/hr
Uncontrolled Emission Rate (tpy) = lb/10^3 gal x 10^3 gal/yr / 2,000 lb/ton

Pollutants	Percent of VOC, %	Emission Rates, pph	tpy
2,2,4 Trimethylpentane	0.02	9.11E-03	2.50E-05
Benzene	0.20	1.05E-01	2.90E-04
Ethylbenzene	0.01	3.38E-03	9.30E-06
n-Hexane	4.58	2.44E+00	6.71E-03
Xylenes	0.01	3.64E-03	1.00E-05

Percent of VOC calculated from the TANKS 4.0 results
Percent of VOC (%) = 100 x Pollutant Emission Rate (lb/yr) / Total VOC Emission Rate (lb/yr)
Emission Rates (pph) = VOC Emission Rate (pph) x (% / 100)
Emission Rates (tpy) = VOC Emission Rate (tpy) x (% / 100)

loading operation, resulting in high levels of vapor generation and loss. If the turbulence is great enough, liquid droplets will be entrained in the vented vapors.

A second method of loading is submerged loading. Two types are the submerged fill pipe method and the bottom loading method. In the submerged fill pipe method, the fill pipe extends almost to the bottom of the cargo tank. In the bottom loading method, a permanent fill pipe is attached to the cargo tank bottom. During most of submerged loading by both methods, the fill pipe opening is below the liquid surface level. Liquid turbulence is controlled significantly during submerged loading, resulting in much lower vapor generation than encountered during splash loading.

The recent loading history of a cargo carrier is just as important a factor in loading losses as the method of loading. If the carrier has carried a nonvolatile liquid such as fuel oil, or has just been cleaned, it will contain vapor-free air. If it has just carried gasoline and has not been vented, the air in the carrier tank will contain volatile organic vapors, which will be expelled during the loading operation along with newly generated vapors.

Cargo carriers are sometimes designated to transport only one product, and in such cases are practicing "dedicated service". Dedicated gasoline cargo tanks return to a loading terminal containing air fully or partially saturated with vapor from the previous load. Cargo tanks may also be "switch loaded" with various products, so that a nonvolatile product being loaded may expel the vapors remaining from a previous load of a volatile product such as gasoline. These circumstances vary with the type of cargo tank and with the ownership of the carrier, the petroleum liquids being transported, geographic location, and season of the year.

One control measure for vapors displaced during liquid loading is called "vapor balance service", in which the cargo tank retrieves the vapors displaced during product unloading at bulk plants or service stations and transports the vapors back to the loading terminal. Figure 5.2-5 shows a tank truck in vapor balance service filling a service station underground tank and taking on displaced gasoline vapors for return to the terminal. A cargo tank returning to a bulk terminal in vapor balance service normally is saturated with organic vapors, and the presence of these vapors at the start of submerged loading of the tanker truck results in greater loading losses than encountered during nonvapor balance, or "normal", service. Vapor balance service is usually not practiced with marine vessels, although some vessels practice emission control by means of vapor transfer within their own cargo tanks during ballasting operations, discussed below.

Emissions from loading petroleum liquid can be estimated (with a probable error of ±30 percent)[4] using the following expression:

$$L_L = 12.46 \frac{SPM}{T} \qquad (1)$$

where:

L_L = loading loss, pounds per 1000 gallons (lb/10^3 gal) of liquid loaded

S = a saturation factor (see Table 5.2-1)
P = true vapor pressure of liquid loaded, pounds per square inch absolute (psia) (see Figure 7.1-5, Figure 7.1-6, and Table 7.1-2)
M = molecular weight of vapors, pounds per pound-mole (lb/lb-mole) (see Table 7.1-2)
T = temperature of bulk liquid loaded, °R (°F + 460)

ED_004016Q_00001128-00050

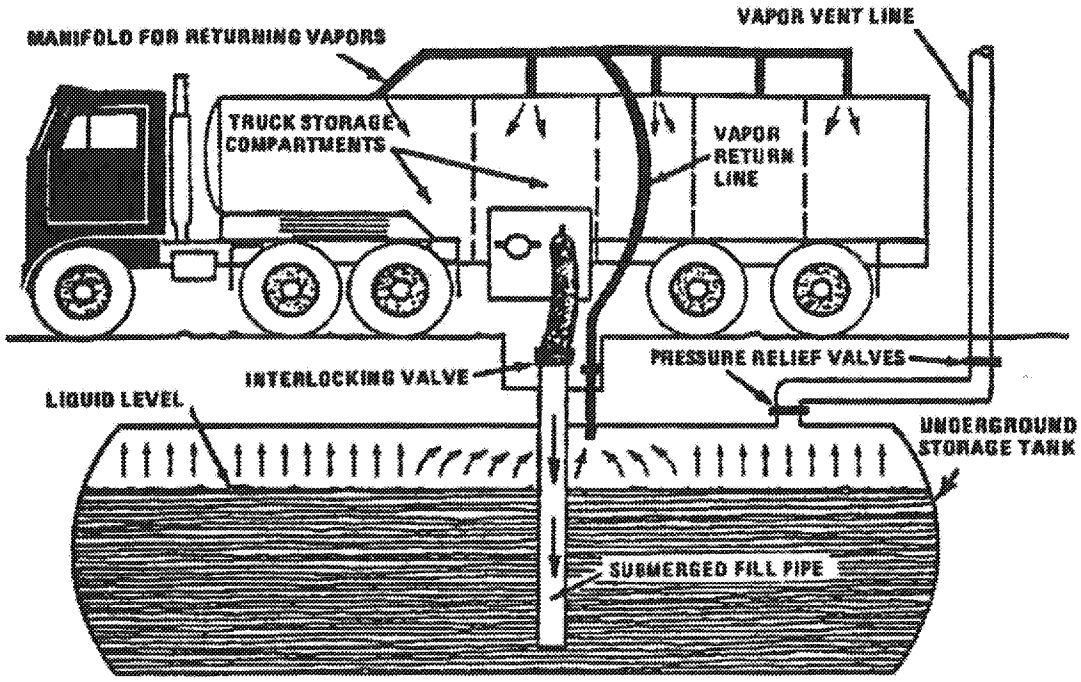

Figure 5.2-5. Tank truck unloading into a service station underground storage tank and practicing "vapor balance" form of emission control.

Table 5.2-1. SATURATION (S) FACTORS FOR CALCULATING PETROLEUM LIQUID LOADING LOSSES

Cargo Carrier	Mode Of Operation	S Factor
Tank trucks and rail tank cars	Submerged loading of a clean cargo tank	0.50
	Submerged loading: dedicated normal service	0.60
	Submerged loading: dedicated vapor balance service	1.00
	Splash loading of a clean cargo tank	1.45
	Splash loading: dedicated normal service	1.45
	Splash loading: dedicated vapor balance service	1.00
Marine vessels[a]	Submerged loading: ships	0.2
	Submerged loading: barges	0.5

[a] For products other than gasoline and crude oil. For marine loading of gasoline, use factors from Table 5.2-2. For marine loading of crude oil, use Equations 2 and 3 and Table 5.2-3.

ED_004016Q_00001128-00051

ORIGIN ID:FMNA (505) 632-4600
TRISTEN RUYBALID
WILLIAMS FOUR CORNERS LLC
1755 ARROYO DRIVE
BLOOMFIELD, NM 87413
UNITED STATES US

SHIP DATE: 16MAR18
ACTWGT: 0.50 LB
CAD: 105020064/INET3980

BILL SENDER

TO ERICA LEDOUX
USEPA REG 6, 6MM-AP
1445 ROSS AVENUE

DALLAS TX 75202
(000) 000-0000
INV:
PO:
REF:
DEPT:

552J1/07F5/DCA5

FedEx Express

J181118012601uv

MON - 19 MAR 10:30A
PRIORITY OVERNIGHT

TRK# 0201 7801 0690 0860

XH KIPA

75202
TX-US DFW

After printing this label:
1. Use the 'Print' button on this page to print your label to your laser or inkjet printer.
2. Fold the printed page along the horizontal line.
3. Place label in shipping pouch and affix it to your shipment so that the barcode portion of the label can be read and scanned.

Warning: Use only the printed original label for shipping. Using a photocopy of this label for shipping purposes is fraudulent and could result in additional billing charges, along with the cancellation of your FedEx account number.
Use of this system constitutes your agreement to the service conditions in the current FedEx Service Guide, available on fedex.com.FedEx will not be responsible for any claim in excess of $100 per package, whether the result of loss, damage, delay, non-delivery,misdelivery,or misinformation, unless you declare a higher value, pay an additional charge, document your actual loss and file a timely claim.Limitations found in the current FedEx Service Guide apply. Your right to recover from FedEx for any loss, including intrinsic value of the package, loss of sales, income interest, profit, attorney's fees, costs, and other forms of damage whether direct, incidental,consequential, or special is limited to the greater of $100 or the authorized declared value. Recovery cannot exceed actual documented loss.Maximum for items of extraordinary value is $1,000, e.g. jewelry, precious metals, negotiable instruments and other items listed in our ServiceGuide. Written claims must be filed within strict time limits, see current FedEx Service Guide.

Ruybalid, Tristen

From: TrackingUpdates@fedex.com
Sent: Monday, March 19, 2018 9:38 AM
To: Ruybalid, Tristen
Subject: [EXTERNAL] FedEx Shipment 780106900860 Delivered

Your package has been delivered

Tracking # 780106900860

Ship date:
Fri, 3/16/2018

Tristen Ruybalid
Williams Four Corners LLC
BLOOMFIELD, NM 87413
US

Delivery date:
Mon, 3/19/2018 10:20 am

Erica LeDoux
USEPA Reg 6, 6MM-AP
1445 Ross Avenue
DALLAS, TX 75202
US

Personalized Message

Ojito 40CFR49.151 True Minor Source Permit in Indian Country Registration PartII

Shipment Facts

Our records indicate that the following package has been delivered.

Tracking number:	780106900860
Status:	Delivered: 03/19/2018 10:20 AM Signed for By: C.LEWIS
Door Tag number:	DT104895094460
Signed for by:	C.LEWIS
Delivery location:	DALLAS, TX
Delivered to:	Receptionist/Front Desk
Service type:	FedEx Priority Overnight
Packaging type:	FedEx Envelope
Number of pieces:	1
Weight:	0.50 lb.
Special handling/Services:	Deliver Weekday
Standard transit:	3/19/2018 by 10:30 am

This tracking update has been requested by:

Company name:	Williams Four Corners LLC
Name:	Tristen Ruybalid
Email:	Mitch.Morris@williams.com

Please do not respond to this message. This email was sent from an unattended mailbox. This report was generated at approximately 10:37 AM CDT on 03/19/2018.

All weights are estimated.

To track the latest status of your shipment, click on the tracking number above.

This tracking update has been sent to you by FedEx on behalf of the Requestor Mitch.Morris@williams.com. FedEx does not validate the authenticity of the requestor and does not validate, guarantee or warrant the authenticity of the request, the requestor's message, or the accuracy of this tracking update.
Standard transit is the date and time the package is scheduled to be delivered by, based on the selected service, destination and ship date. Limitations and exceptions may apply. Please see the FedEx Service Guide for terms and conditions of service, including the FedEx Money-Back Guarantee, or contact your FedEx Customer Support representative.

© 2018 Federal Express Corporation. The content of this message is protected by copyright and trademark laws under U.S. and international law. Review our privacy policy. All rights reserved.

Thank you for your business.