EPA Form No. 5900-391
EPA ICR No. 1230.27
OMB Control No. 2060-0003
Approval expires 4/30/2017

United States Environmental Protection Agency
https://www.epa.gov/tribal-air/tribal-minor-new-source-review
January 4, 2017

Part 2: Submit Within 60 Days After Startup of Production -- Emission and Production Information

FEDERAL IMPLEMENTATION PLAN FOR TRUE MINOR SOURCES IN INDIAN COUNTRY IN THE OIL AND NATURAL GAS PRODUCTION AND NATURAL GAS PROCESSING SEGMENTS OF THE OIL AND NATURAL GAS SECTOR

Registration for New True Minor Oil and Natural Gas Sources and Minor Modifications at Existing True Minor Oil and Natural Gas Sources

Please submit information to:

[Reviewing Authority Address Phone]	Air and Toxics Technical Enforcement Program Office of Enforcement, Compliance and Environmental Justice Mail Code 8ENF-AT 1595 Wynkoop Street Denver, CO 80202-1129

A. GENERAL SOURCE INFORMATION (See Instructions Below)

1. Company Name Crescent Point Energy U.S. Corp		**2. Source Name** Ute Tribal 13-16-3-1E-H1 & 4-21-3-1E-H1 Production Facility	
3. Type of Oil and Natural Gas Operation Oil Wellsite		**4. New Minor Source?** [X] Yes [ ] No **5. True Source Modification?** [ ] Yes [X] No	
6. NAICS Code 211111		**7. SIC Code** 1311	
8. U.S. Well ID(s) or API Number(s) [if applicable] 4304755380 & 4304755379			
9. Area of Indian Country Uintah and Ouray	**10. County** UINTAH	**11a. Latitude** 40.21198706	**11b. Longitude** -109.892513

ED_004016P_00013403-00001

B. CONTACT INFORMATION (See Instructions Below)

1. Owner Name Crescent Point Energy U.S. Corp	Title N/A
Mailing Address 555 17th St, Suite 1800, Denver, CO 80202	
Email Address jmcqueen@crescentpointenergy.com	
Telephone Number (720) 880-3610	Facsimile Number (303) 292-1562
2. Operator Name (if different from owner) Crescent Point Energy U.S. Corp	Title
Mailing Address 555 17th St, Suite 1800, Denver, CO 80202	
Email Address jmcqueen@crescentpointenergy.com	
Telephone Number (720) 880-3610	Facsimile Number (303) 292-1562
3. Source Contact Jennifer McQueen	Title Air Quality Specialist
Mailing Address 555 17th St, Suite 1800, Denver, CO 80202	
Email Address jmcqueen@crescentpointenergy.com	
Telephone Number (303) 308-6285	Facsimile Number (303) 292-1562

4. Compliance Contact	Title
Jennifer McQueen	Air Quality Specialist
Mailing Address	
555 17th St, Suite 1800, Denver, CO 80202	
Email Address	
jmcqueen@crescentpointenergy.com	
Telephone Number	Facsimile Number
(303) 308-6285	(303) 292-1562

C. EMISSIONS AND OTHER SOURCE INFORMATION

Include all of the following information in the table below and as attachments to this form:

Note: The emission estimates can be based upon actual test data or, in the absence of such data, upon procedures acceptable to the Reviewing Authority. The following procedures are generally acceptable for estimating emissions from air pollution sources: (1) unit-specific emission tests; (2) mass balance calculations; (3) published, verifiable emission factors that are applicable to the unit (i.e., manufacturer specifications); (4) other engineering calculations; or (5) other procedures to estimate emissions specifically approved by the Reviewing Authority. Guidance for estimating emissions can be found at https://www.epa.gov/chief.

[X] Narrative description of the operations.

[X] Identification and description of any air pollution control equipment and compliance monitoring devices or activities.

[X] Type and actual amount (annually) of each fuel that will be used.

[X] Type of raw materials used (e.g., water for hydraulic fracturing).

[X] Actual, annual production rates.

[X] Actual operating schedules.

[X] Any existing limitations on source operations affecting emissions or any work practice standards, where applicable, for all regulated New Source Review (NSR) pollutants at your source. Indicate all requirements referenced in the Federal Implementation Plan (FIP) for True Minor Sources in Indian Country in the Oil and Natural Gas Production and Natural Gas Processing Segments of the Oil and Natural Gas Sector that apply to emissions units and air pollution generating activities at the source or proposed. Include statements indicating each emissions unit that is an emissions unit potentially subject to the requirements referenced in the FIP, but does not meet the definition of an affected facility under the referenced requirement, and therefore, is not subject to those requirements.

[X] For each emissions unit comprising the new source or modification, estimates of the total allowable (potential to emit) annual emissions at startup of production from the air pollution source for the following air pollutants: particulate matter, PM_{10}, $PM_{2.5}$, sulfur oxides ( ), nitrogen oxides (NO_x), carbon monoxide (CO), volatile organic compound (VOC), lead (Pb) and lead compounds, fluorides (gaseous and particulate), sulfuric acid mist (H_2SO_4), hydrogen sulfide (H_2S), total reduced sulfur (TRS) and reduced sulfur compounds, including all calculations for the estimates. Allowable annual emissions are defined as: emissions rate of an emissions unit calculated using the maximum capacity of a stationary source to emit a pollutant under its physical and operational design. Any physical

or operational limitation on the capacity of the source to emit a pollutant, including air pollution control equipment and restrictions on hours of operation or on the type or amount of material combusted, stored, or processed, shall be treated as part of its design if the limitation, or the effect it would have on emissions, is legally and practically enforceable. You must determine the potential for emissions within 30 days from the startup of production.

[X] For each emissions unit comprising the new source or modification, estimates of the total actual annual emissions during the upcoming, consecutive 12 months from the air pollution source for the following air pollutants: particulate matter (PM, PM_{10}, $PM_{2.5}$), sulfur oxides (SO_x), nitrogen oxides (NOx), carbon monoxide (CO), volatile organic compound (VOC), lead (Pb) and lead compounds, ammonia (NH_3), fluorides (gaseous and particulate), sulfuric acid mist (H_2SO_4), hydrogen sulfide (H_2S), total reduced sulfur (TRS) and reduced sulfur compounds, including all calculations for the estimates. Estimates of actual emissions must take into account equipment, operating conditions, and air pollution control measures. You should calculate an estimate of the actual annual emissions using estimated operating hours, production rates, in-place control equipment, and types of materials processed, stored, or combusted.

D. TABLE OF ESTIMATED EMISSIONS

Provide in the table below estimates of the total allowable annual emissions in tons per year (tpy) and total actual annual emissions (tpy) for the following pollutants for all emissions units comprising the new source or modification.

POLLUTANT	TOTAL ALLOWABLE ANNUAL EMISSIONS (TPY)	TOTAL ACTUAL ANNUAL EMISSIONS (TPY)
PM	0.59	0.59
PM_{10}	0.57	0.57
$PM_{2.5}$	0.57	0.57
SO_x	0.00	0.00
NO_x	13.44	13.44
CO	24.08	24.08
VOC	97.98	40.20
Pb	None	None

POLLUTANT	TOTAL ALLOWABLE ANNUAL EMISSIONS (TPY)	TOTAL ACTUAL ANNUAL EMISSIONS (TPY)
NH3	None	None
Fluorides	None	None
H_2SO_4	None	None
H_2S	None	None
TRS	None	None

ATTACHMENT A

OIL AND GAS COMPOSITION ANALYSES

TECHNOLOGY LABORATORY, INC.

CENTRE PROFESSIONAL OFFICE PARK
1012 Centre Avenue
Fort Collins, Colorado 80526
(970) 490-1414

CERTIFICATE OF ANALYSIS

Antea
1343 S. Garfield Ave
Loveland, CO 80537

Date Sampled: 1/7/2014 & 1/8/2014
Date Received: 1/10/2014
Date Analyzed: 2/7/2014

Laboratory ID: A9660
Field Location: Crescent Point Roosevelt, UT (NGL)

Matrix: Oil

Laboratory ID:	Sample Name:	RVP psi @100°F	Vapor Pressure psi @145°F	API Gravity @60°F	Density 60/60	Avg MW estimated
A9660-47	Womack Daddy 3-16-3-IE A	0.18	3.2	25.6	0.901	600
A9660-49	Womack 3-83-IE A	0.20	1.0	32.8	0.861	600
A9660-51	Ute Energy 7-27-8-IE A	0.18	1.2	34.1	0.854	600
A9660-54	ULT 15-34-3-IE A	0.24	2.0	31.1	0.87	600
A9660-56	Coleman Tribal 13-8-4-2E A	0.42	0.9	31.7	0.861	600
A9660-61	Deep Creek Solo 5-16-4-2E	0.39	2.2	30.9	0.855	600
A9660-58	ULT 12-6-4-2E A	0.18	1.6	33.0	0.86	600
A9660-62	Ute Tribal 15-32-3-2E A	0.26	1.9	32.9	0.861	600
A9660-64	Deep Creek 2-30-3-2E A	0.25	2.1	33.6	0.857	600
A9660-66	Coleman Tribal 7-8-4-2E A	0.20	1.2	33.7	0.857	600
A9660-68	ULT 16-36-3-1E A	0.23	0.5	33.9	0.856	600
A9660-70	ULT 16-26-3-1E A	0.10	1.7	32.6	0.862	600
A9660-72	Ouray Valley Federal 3-41 A	0.24	0.9	30.3	0.875	600
A9660-74	Federal 14-19-6-21	0.19	2.1	28.1	0.887	600
A9660-76	Gose 3-18-6-21 A	0.21	1.1	29.4	0.879	600

FESCO, Ltd.
1100 Fesco Ave. - Alice, Texas 78332

For: Ute Energy Upstream Holdings
P. O. Box 789
Fort Duchesne, Utah 84026

Sample: Ute Tribal 1-5-4-2E
Gas Evolved From Hydrocarbon Liquid Flashed
From 30 psig & 160 °F to 0 psig & 70 °F

Date Sampled: 11/02/2011 Job Number: 16137.001

CHROMATOGRAPH EXTENDED ANALYSIS - SUMMATION REPORT

COMPONENT	MOL%	GPM
Hydrogen Sulfide*	< 0.001	
Nitrogen	3.241	
Carbon Dioxide	0.400	
Methane	14.294	
Ethane	17.218	4.579
Propane	29.085	7.967
Isobutane	6.454	2.100
n-Butane	13.604	4.264
2-2 Dimethylpropane	0.070	0.027
Isopentane	4.672	1.699
n-Pentane	4.671	1.684
Hexanes	3.848	1.579
Heptanes Plus	2.443	0.978
Totals	100.000	24.876

Computed Real Characteristics Of Heptanes Plus:

Specific Gravity	3.339	(Air=1)
Molecular Weight	94.85	
Gross Heating Value	4945	BTU/CF

Computed Real Characteristics Of Total Sample:

Specific Gravity	1.599	(Air=1)
Compressibility (Z)	0.9807	
Molecular Weight	45.41	
Gross Heating Value		
Dry Basis	2557	BTU/CF
Saturated Basis	2513	BTU/CF

*Hydrogen Sulfide tested in laboratory by Stained Tube Method (GPA 2377)
Results: 0.252 Gr/100 CF, 4.0 PPMV or 0.0004 Mol %

Base Conditions: 14.650 PSI & 60 Deg F

Certified: FESCO, Ltd. - Alice, Texas

Analyst: TJ
Processor: FC
Cylinder ID: FL-12s

David Dannhaus 361-661-7015

CHROMATOGRAPH EXTENDED ANALYSIS
TOTAL REPORT

COMPONENT	MOL %	GPM	WT %
Hydrogen Sulfide*	< 0.001		< 0.001
Nitrogen	3.241		1.999
Carbon Dioxide	0.400		0.388
Methane	14.294		5.049
Ethane	17.218	4.579	11.402
Propane	29.085	7.967	28.244
Isobutane	6.454	2.100	8.261
n-Butane	13.604	4.264	17.413
2,2 Dimethylpropane	0.070	0.027	0.111
Isopentane	4.672	1.699	7.423
n-Pentane	4.671	1.684	7.422
2,2 Dimethylbutane	0.021	0.009	0.040
Cyclopentane	0.339	0.141	0.524
2,3 Dimethylbutane	0.070	0.029	0.133
2 Methylpentane	1.270	0.524	2.410
3 Methylpentane	0.589	0.239	1.118
n-Hexane	1.559	0.637	2.959
Methylcyclopentane	0.537	0.184	0.995
Benzene	0.078	0.022	0.134
Cyclohexane	0.341	0.115	0.632
2-Methylhexane	0.116	0.054	0.256
3-Methylhexane	0.139	0.063	0.307
2,2,4 Trimethylpentane	0.000	0.000	0.000
Other C7's	0.390	0.169	0.852
n-Heptane	0.284	0.130	0.627
Methylcyclohexane	0.196	0.078	0.424
Toluene	0.059	0.020	0.120
Other C8's	0.207	0.096	0.502
n-Octane	0.029	0.015	0.073
Ethylbenzene	0.003	0.001	0.007
M & P Xylenes	0.011	0.004	0.026
O-Xylene	0.002	0.001	0.005
Other C9's	0.042	0.021	0.117
n-Nonane	0.003	0.002	0.008
Other C10's	0.005	0.003	0.016
n-Decane	0.001	0.001	0.003
Undecanes (11)	0.000	0.000	0.000
Totals	100.000	24.876	100.000

Computed Real Characteristics Of Total Sample:

Specific Gravity	1.599	(Air=1)
Compressibility (Z)	0.9807	
Molecular Weight	45.41	
Gross Heating Value		
Dry Basis	2557	BTU/CF
Saturated Basis	2513	BTU/CF

FESCO, Ltd.
1100 Fesco Ave. - Alice, Texas 78332

For: Ute Energy Upstream Holdings
P. O. Box 789
Fort Duchesne, Utah 84026

Sample: Ute Tribal 1-5-4-2E
Gas Evolved From Hydrocarbon Liquid Flashed
From 46 psig & 155 °F to 0 psig & 70 °F

Date Sampled: 11/02/2011 Job Number: 16136.001

CHROMATOGRAPH EXTENDED ANALYSIS - SUMMATION REPORT

COMPONENT	MOL%	GPM
Hydrogen Sulfide*	0.001	
Nitrogen	0.557	
Carbon Dioxide	0.659	
Methane	39.329	
Ethane	17.201	4.574
Propane	19.937	5.461
Isobutane	3.856	1.255
n-Butane	8.864	2.779
2-2 Dimethylpropane	0.049	0.019
Isopentane	2.745	0.998
n-Pentane	2.971	1.071
Hexanes	2.041	0.838
Heptanes Plus	1.790	0.736
Totals	100.000	17.730

Computed Real Characteristics Of Heptanes Plus:

Specific Gravity	3.402	(Air=1)
Molecular Weight	97.37	
Gross Heating Value	5085	BTU/CF

Computed Real Characteristics Of Total Sample:

Specific Gravity	1.249	(Air=1)
Compressibility (Z)	0.9882	
Molecular Weight	35.74	
Gross Heating Value		
Dry Basis	2055	BTU/CF
Saturated Basis	2020	BTU/CF

*Hydrogen Sulfide tested in laboratory by Stained Tube Method (GPA 2377)
Results: 0.377 Gr/100 CF, 6.0 PPMV or 0.001 Mol %

Base Conditions: 14.650 PSI & 60 Deg F

Certified: FESCO, Ltd. - Alice, Texas

Analyst: TJ
Processor: FC
Cylinder ID: FL-15

David Dannhaus 361-661-7015

CHROMATOGRAPH EXTENDED ANALYSIS
TOTAL REPORT

COMPONENT	MOL %	GPM	WT %
Hydrogen Sulfide*	0.001		0.001
Nitrogen	0.557		0.437
Carbon Dioxide	0.659		0.812
Methane	39.329		17.652
Ethane	17.201	4.574	14.473
Propane	19.937	5.461	24.600
Isobutane	3.856	1.255	6.271
n-Butane	8.864	2.779	14.416
2,2 Dimethylpropane	0.049	0.019	0.099
Isopentane	2.745	0.998	5.542
n-Pentane	2.971	1.071	5.998
2,2 Dimethylbutane	0.016	0.007	0.039
Cyclopentane	0.226	0.094	0.444
2,3 Dimethylbutane	0.041	0.017	0.099
2 Methylpentane	0.663	0.274	1.599
3 Methylpentane	0.292	0.119	0.704
n-Hexane	0.803	0.328	1.936
Methylcyclopentane	0.306	0.105	0.721
Benzene	0.053	0.015	0.116
Cyclohexane	0.189	0.064	0.445
2-Methylhexane	0.084	0.039	0.236
3-Methylhexane	0.098	0.044	0.275
2,2,4 Trimethylpentane	0.000	0.000	0.000
Other C7's	0.256	0.111	0.711
n-Heptane	0.239	0.110	0.670
Methylcyclohexane	0.177	0.071	0.486
Toluene	0.049	0.016	0.126
Other C8's	0.208	0.096	0.641
n-Octane	0.046	0.023	0.147
Ethylbenzene	0.004	0.002	0.012
M & P Xylenes	0.011	0.004	0.033
O-Xylene	0.002	0.001	0.006
Other C9's	0.050	0.025	0.177
n-Nonane	0.004	0.002	0.014
Other C10's	0.005	0.003	0.020
n-Decane	0.001	0.001	0.004
Undecanes (11)	0.008	0.005	0.038
Totals	100.000	17.730	100.000

Computed Real Characteristics Of Total Sample:

Specific Gravity ---------- 1.249 (Air=1)
Compressibility (Z) ---------- 0.9882
Molecular Weight ---------- 35.74

Gross Heating Value
Dry Basis ---------- 2055 BTU/CF
Saturated Basis ---------- 2020 BTU/CF

FESCO, Ltd.
1100 Fesco Ave. - Alice, Texas 78332

For: Ute Energy Upstream Holdings
P. O. Box 789
Fort Duchesne, Utah 84026

Sample: Ute Tribal 10-30-3-2E
Gas Evolved from Hydrocarbon Liquid Flashed
From 45 psig & 160 °F to 0 psig & 70 °F

Date Sampled: 11/02/2011 Job Number: 16135.001

CHROMATOGRAPH EXTENDED ANALYSIS - SUMMATION REPORT

COMPONENT	MOL%	GPM
Hydrogen Sulfide*	< 0.001	
Nitrogen	0.494	
Carbon Dioxide	0.716	
Methane	37.302	
Ethane	19.192	5.103
Propane	19.627	5.376
Isobutane	3.482	1.133
n-Butane	9.005	2.823
2-2 Dimethylpropane	0.048	0.018
Isopentane	2.597	0.944
n-Pentane	3.362	1.212
Hexanes	2.303	0.945
Heptanes Plus	1.872	0.760
Totals	100.000	18.315

Computed Real Characteristics Of Heptanes Plus:

Specific Gravity	3.363	(Air=1)
Molecular Weight	96.22	
Gross Heating Value	5015	BTU/CF

Computed Real Characteristics Of Total Sample:

Specific Gravity	1.265	(Air=1)
Compressibility (Z)	0.9878	
Molecular Weight	36.20	
Gross Heating Value		
Dry Basis	2080	BTU/CF
Saturated Basis	2045	BTU/CF

*Hydrogen Sulfide tested in laboratory by Stained Tube Method (GPA 2377)
Results: 0.063 Gr/100 CF, 1.0 PPMV or 0.0001 Mol %

Base Conditions: 14.650 PSI & 60 Deg F

Certified: FESCO, Ltd. - Alice, Texas

Analyst: TJ
Processor: AM
Cylinder ID: FL-7s

David Dannhaus 361-661-7015

CHROMATOGRAPH EXTENDED ANALYSIS
TOTAL REPORT

COMPONENT	MOL %	GPM	WT %
Hydrogen Sulfide*	< 0.001		< 0.001
Nitrogen	0.494		0.382
Carbon Dioxide	0.716		0.870
Methane	37.302		16.530
Ethane	19.192	5.103	15.940
Propane	19.627	5.376	23.906
Isobutane	3.482	1.133	5.590
n-Butane	9.005	2.823	14.457
2,2 Dimethylpropane	0.048	0.018	0.096
Isopentane	2.597	0.944	5.175
n-Pentane	3.362	1.212	6.700
2,2 Dimethylbutane	0.017	0.007	0.040
Cyclopentane	0.230	0.095	0.446
2,3 Dimethylbutane	0.040	0.016	0.095
2 Methylpentane	0.632	0.261	1.504
3 Methylpentane	0.310	0.126	0.738
n-Hexane	1.074	0.439	2.556
Methylcyclopentane	0.325	0.111	0.756
Benzene	0.077	0.021	0.166
Cyclohexane	0.245	0.083	0.569
2-Methylhexane	0.084	0.039	0.232
3-Methylhexane	0.088	0.040	0.244
2,2,4 Trimethylpentane	0.000	0.000	0.000
Other C7's	0.230	0.100	0.630
n-Heptane	0.284	0.130	0.786
Methylcyclohexane	0.206	0.082	0.559
Toluene	0.046	0.015	0.117
Other C8's	0.168	0.078	0.511
n-Octane	0.039	0.020	0.123
Ethylbenzene	0.002	0.001	0.006
M & P Xylenes	0.012	0.005	0.035
O-Xylene	0.002	0.001	0.006
Other C9's	0.034	0.017	0.119
n-Nonane	0.008	0.004	0.028
Other C10's	0.013	0.008	0.051
n-Decane	0.003	0.002	0.012
Undecanes (11)	0.006	0.004	0.025
Totals	100.000	18.315	100.000

Computed Real Characteristics Of Total Sample:

Specific Gravity	1.265	(Air=1)
Compressibility (Z)	0.9878	
Molecular Weight	36.20	
Gross Heating Value		
Dry Basis	2080	BTU/CF
Saturated Basis	2045	BTU/CF

QUESTAR APPLIED TECHNOLOGY

1210 D. Street, Rock Springs, Wyoming 82901

(307) 352-7292

LIMS ID:	N/A		Description:	Coleman Tribal 2-18-4-2E
Analysis Date/Time:	6/27/2011	8:12 AM	Field:	Leland Bench
Analyst Initials:	PRP		ML#:	Ute Energy
Instrument ID:	Instrument 1		GC Method:	Quesbtex
Data File:	QPC12.D			
Date Sampled:	6/22/2011			

Component	Mol%	Wt%	LV%
Methane	78.3766	58.6881	68.9498
Ethane	9.8817	13.8690	13.7534
Propane	6.7479	13.8884	9.6562
Isobutane	0.9285	2.5189	1.5774
n-Butane	1.7060	4.6282	2.7933
Neopentane	0.0101	0.0341	0.0201
Isopentane	0.4236	1.4264	0.8052
n-Pentane	0.3980	1.3404	0.7486
2,2-Dimethylbutane	0.0019	0.0078	0.0042
2,3-Dimethylbutane	0.0252	0.1012	0.0535
2-Methylpentane	0.0863	0.3471	0.1860
3-Methylpentane	0.0357	0.1436	0.0756
n-Hexane	0.0995	0.4003	0.2125
Heptanes	0.1398	0.6137	0.2914
Octanes	0.0236	0.1253	0.0612
Nonanes	0.0113	0.0643	0.0301
Decanes plus	0.0022	0.0146	0.0070
Nitrogen	0.6365	0.8322	0.3624
Carbon Dioxide	0.4656	0.9564	0.4121
Oxygen	0.0000	0.0000	0.0000
Hydrogen Sulfide	0.0000	0.0000	0.0000
Total	100.0000	100.0000	100.0000

Global Properties		Units
Gross BTU/Real CF	1284.6	BTU/SCF at 60°F and14.73 psia
Sat.Gross BTU/Real CF	1263.4	BTU/SCF at 60°F and14.73 psia
Gas Compressibility (Z)	0.9962	
Specific Gravity	0.7413	air=1
Avg Molecular Weight	21.425	gm/mole
Propane GPM	1.849348	gal/MCF
Butane GPM	0.839526	gal/MCF
Gasoline GPM	0.460696	gal/MCF
26# Gasoline GPM	0.998320	gal/MCF
Total GPM	3.150733	gal/MCF
Base Mol%	100.076	%v/v

Sample Temperature:	132	°F
Sample Pressure:	71	psig
H2SLength of Stain Tube	N/A	ppm

Component	Mol%	Wt%	LV%
Benzene	0.0064	0.0235	0.0094
Toluene	0.0060	0.0259	0.0105
Ethylbenzene	0.0006	0.0029	0.0012
M&P Xylene	0.0021	0.0105	0.0043
O-Xylene	0.0005	0.0023	0.0009
2,2,4-Trimethylpentane	0.0083	0.0442	0.0216
Cyclopentane	0.0000	0.0000	0.0000
Cyclohexane	0.0210	0.0825	0.0371
Methylcyclohexane	0.0189	0.0868	0.0395
Description:	Coleman Tribal 2-18-4-2E		

GRI GlyCalc Information

Component	Mol%	Wt%	LV%
Carbon Dioxide	0.4656	0.9564	0.4121
Hydrogen Sulfide	0.0000	0.0000	0.0000
Nitrogen	0.6365	0.8322	0.3624
Methane	78.3766	58.6881	68.9498
Ethane	9.8817	13.8690	13.7534
Propane	6.7479	13.8884	9.6562
Isobutane	0.9285	2.5189	1.5774
n-Butane	1.7060	4.6282	2.7933
Isopentane	0.4337	1.4605	0.8253
n-Pentane	0.3980	1.3404	0.7486
Cyclopentane	0.0000	0.0000	0.0000
n-Hexane	0.0995	0.4003	0.2125
Cyclohexane	0.0210	0.0825	0.0371
Other Hexanes	0.1491	0.5997	0.3193
Heptanes	0.0792	0.3508	0.1733
Methylcyclohexane	0.0189	0.0868	0.0395
2,2,4 Trimethylpentane	0.0083	0.0442	0.0216
Benzene	0.0064	0.0235	0.0094
Toluene	0.0060	0.0259	0.0105
Ethylbenzene	0.0006	0.0029	0.0012
Xylenes	0.0026	0.0128	0.0052
C8+ Heavies	0.0339	0.1885	0.0919
Subtotal	100.0000	100.0000	100.0000
Oxygen	0.0000	0.0000	0.0000
Total	100.0000	100.0000	100.0000

ATTACHMENT

FACILITY EQUIPMENT EMISSION CALCULATIONS

Company: Crescent Point Energy U.S. Corp
Facility: Ute Tribal 13-16-3-1E-H1 & 4-21-3-1E-H1 Production Facility

Oil Production: 1,500 bbl/day
547,500 bbl/year

TABLE 1: Uncontrolled Potential to Emit Summary Sheet

Emissions Source	NO_x		CO		VOC		Total HAPs	
	lb/hr	tpy	lb/hr	tpy	lb/hr	tpy	lb/hr	tpy
Crude Oil Storage Tanks - TK1 - TK18	n/a	n/a	n/a	n/a	43.28	189.55	1.69	7.42
Produced Water Tank(s)	n/a	n/a	n/a	n/a	n/a	n/a	n/a	n/a
Heater/Treater(s)	0.27	1.19	0.23	1.00	0.01	0.07	0.01	0.02
Tank Heaters	0.65	2.85	0.55	2.39	0.04	0.16	0.01	0.05
Oil Tank Truck Loading	n/a	n/a	n/a	n/a	8.45	17.78	0.16	0.70
Combustor(s)	0.09	0.39	0.41	1.78	0.18	0.81	n/a	n/a
Flared Produced Gas Emissions	n/a	n/a	n/a	n/a	13.89	60.83	0.28	1.21
Fugitive Emissions	n/a	n/a	n/a	n/a	0.64	2.79	0.02	0.09
Methanol Tank - 55-gallon drum	n/a	n/a	n/a	n/a	0.00	0.00	n/a	n/a
Glycol Tank - 55-gallon drum	n/a	n/a	n/a	n/a	0.00	0.00	n/a	n/a
Engine 1 (E-1)	0.99	4.33	1.98	8.66	1.15	5.03	0.10	0.43
Engine 2 (E-2)	0.99	4.33	1.98	8.66	1.15	5.03	0.10	0.43
Total	**2.99**	**13.09**	**5.14**	**22.50**	**68.78**	**282.06**	**2.36**	**10.35**

Emissions Source	PM		PM_{10}		$PM_{2.5}$		SO_2	
	lb/hr	tpy	lb/hr	tpy	lb/hr	tpy	lb/hr	tpy
Crude Oil Storage Tanks - TK1 - TK18	n/a	n/a	n/a	n/a	n/a	n/a	n/a	n/a
Produced Water Tank(s)	n/a	n/a	n/a	n/a	n/a	n/a	n/a	n/a
Heater/Treater(s)	0.02	0.09	0.02	0.09	0.02	0.09	n/a	n/a
Tank Heaters	0.05	0.22	0.05	0.22	0.05	0.22	n/a	n/a
Oil Tank Truck Loading	n/a	n/a	n/a	n/a	n/a	n/a	n/a	n/a
Combustor(s)	n/a	n/a	n/a	n/a	n/a	n/a	n/a	n/a
Flared Produced Gas Emissions	n/a	n/a	n/a	n/a	n/a	n/a	n/a	n/a
Fugitive Emissions	n/a	n/a	n/a	n/a	n/a	n/a	n/a	n/a
Methanol Tank - 55-gallon drum	n/a	n/a	n/a	n/a	n/a	n/a	n/a	n/a
Glycol Tank - 55-gallon drum	n/a	n/a	n/a	n/a	n/a	n/a	n/a	n/a
Engine 1 (E-1)	0.03	0.14	0.03	0.13	0.03	0.13	0.00	0.00
Engine 2 (E-2)	0.03	0.14	0.03	0.13	0.03	0.13	0.00	0.00
Total	**0.13**	**0.59**	**0.13**	**0.57**	**0.13**	**0.57**	**0.00**	**0.00**

Notes:
BBL = Barrels
lb/hr = Pounds per hour
tpy = Tons per year
PM = Particulate matter
PM10 = Particulate matter of 10 microns or less
PM2.5 = Particulate matter of 2.5 microns or less
NOx = Nitrogen oxides
CO = Carbon monoxide
VOC = Volatile organic compounds
HAPs = Hazardous air pollutants
SO2 = Sulfur dioxides
n/a = Not applicable

Company: Crescent Point Energy U.S. Corp
Facility: Ute Tribal 13-16-3-1E-H1 & 4-21-3-1E-H1 Production Facility

Oil Production: 1,500 bbl/day
547,500 bbl/year

TABLE 1: Uncontrolled Potential to Emit Summary Sheet (Continued)

Emissions Source	Benzene		Toluene		Ethylbenzene		Xylene	
	lb/hr	tpy	lb/hr	tpy	lb/hr	tpy	lb/hr	tpy
Crude Oil Storage Tanks - TK1 - TK18	0.083	0.363	0.072	0.317	0.005	0.021	0.022	0.095
Produced Water Tank(s)	n/a	n/a	n/a	n/a	n/a	n/a	n/a	n/a
Heater/Treater(s)	0.000	0.000	0.000	0.000	n/a	n/a	n/a	n/a
Tank Heaters	0.000	0.000	0.000	0.000	n/a	n/a	n/a	n/a
Oil Tank Truck Loading	0.008	0.034	0.007	0.030	0.000	0.002	0.002	0.009
Combustor(s)	n/a	n/a	n/a	n/a	n/a	n/a	n/a	n/a
Flared Produced Gas Emissions	0.013	0.055	0.014	0.061	0.002	0.007	0.007	0.031
Fugitive Emissions	0.001	0.005	0.001	0.004	0.000	0.000	0.000	0.001
Methanol Tank - 55-gallon drum	n/a	n/a	n/a	n/a	n/a	n/a	n/a	n/a
Glycol Tank - 55-gallon drum	n/a	n/a	n/a	n/a	n/a	n/a	n/a	n/a
Engine 1 (E-1)	0.005	0.022	n/a	n/a	n/a	n/a	n/a	n/a
Engine 2 (E-2)	0.005	0.022	n/a	n/a	n/a	n/a	n/a	n/a
Total	**0.115**	**0.502**	**0.094**	**0.412**	**0.007**	**0.031**	**0.031**	**0.136**

Emissions Source	Acetaldehyde		Acrolein		n-Hexane		Formaldehyde	
	lb/hr	tpy	lb/hr	tpy	lb/hr	tpy	lb/hr	tpy
Crude Oil Storage Tanks - TK1 - TK18	n/a	n/a	n/a	n/a	1.512	6.622	n/a	n/a
Produced Water Tank(s)	n/a	n/a	n/a	n/a	n/a	n/a	n/a	n/a
Heater/Treater(s)	n/a	n/a	n/a	n/a	0.005	0.021	0.000	0.001
Tank Heaters	n/a	n/a	n/a	n/a	0.012	0.051	0.000	0.002
Oil Tank Truck Loading	n/a	n/a	n/a	n/a	0.142	0.621	n/a	n/a
Combustor(s)	n/a	n/a	n/a	n/a	n/a	n/a	n/a	n/a
Flared Produced Gas Emissions	n/a	n/a	n/a	n/a	0.217	0.948	n/a	n/a
Fugitive Emissions	n/a	n/a	n/a	n/a	0.019	0.082	n/a	n/a
Methanol Tank - 55-gallon drum	n/a	n/a	n/a	n/a	n/a	n/a	n/a	n/a
Glycol Tank - 55-gallon drum	n/a	n/a	n/a	n/a	n/a	n/a	n/a	n/a
Engine 1 (E-1)	0.009	0.039	0.008	0.037	n/a	n/a	0.066	0.288
Engine 2 (E-2)	0.009	0.039	0.008	0.037	n/a	n/a	0.066	0.288
Total	**0.018**	**0.078**	**0.017**	**0.074**	**1.905**	**8.346**	**0.132**	**0.579**

Notes:
BBL = Barrels
lb/hr = Pounds per hour
tpy = Tons per year
PM = Particulate matter
PM10 = Particulate matter of 10 microns or less
PM2.5 = Particulate matter of 2.5 microns or less
NOx = Nitrogen oxides
CO = Carbon monoxide
VOC = Volatile organic compounds
HAPs = Hazardous air pollutants
SO2 = Sulfur dioxides
n/a = Not applicable

Company: Crescent Point Energy U.S. Corp
Facility: Ute Tribal 13-16-3-1E-H1 & 4-21-3-1E-H1 Production Facility

Oil Production: 1,500 bbl/day
547,500 bbl/year

TABLE 2: Total Actual Emissions Summary Sheet

Emissions Source	NO_x		CO		VOC		Total HAPs	
	lb/hr	tpy	lb/hr	tpy	lb/hr	tpy	lb/hr	tpy
Crude Oil Storage Tanks - TK1 - TK18	n/a	n/a	n/a	n/a	2.16	9.48	0.08	0.37
Produced Water Tank(s)	n/a	n/a	n/a	n/a	n/a	n/a	n/a	n/a
Heater/Treater(s)	0.27	1.19	0.23	1.00	0.01	0.07	0.01	0.02
Tank Heaters	0.65	2.85	0.55	2.39	0.04	0.16	0.01	0.05
Oil Tank Truck Loading	n/a	n/a	n/a	n/a	8.45	17.78	0.16	0.70
Combustor(s)	0.09	0.39	0.41	1.78	0.18	0.81	n/a	n/a
Flared Produced Gas Emissions	0.08	0.35	0.36	1.58	0.70	3.05	0.01	0.06
Fugitive Emissions	n/a	n/a	n/a	n/a	0.64	2.79	0.02	0.09
Methanol Tank - 55-gallon drum	n/a	n/a	n/a	n/a	0.00	0.00	n/a	n/a
Glycol Tank - 55-gallon drum	n/a	n/a	n/a	n/a	0.00	0.00	n/a	n/a
Engine 1 (E-1)	0.99	4.33	1.98	8.66	0.69	3.03	0.05	0.21
Engine 2 (E-2)	0.99	4.33	1.98	8.66	0.69	3.03	0.05	0.21
Total	**3.07**	**13.44**	**5.50**	**24.08**	**13.57**	**40.20**	**0.39**	**1.72**

Emissions Source	PM		PM_{10}		$PM_{2.5}$		SO_2	
	lb/hr	tpy	lb/hr	tpy	lb/hr	tpy	lb/hr	tpy
Crude Oil Storage Tanks - TK1 - TK18	n/a	n/a	n/a	n/a	n/a	n/a	n/a	n/a
Produced Water Tank(s)	n/a	n/a	n/a	n/a	n/a	n/a	n/a	n/a
Heater/Treater(s)	0.02	0.09	0.02	0.09	0.02	0.09	n/a	n/a
Tank Heaters	0.05	0.22	0.05	0.22	0.05	0.22	n/a	n/a
Oil Tank Truck Loading	n/a	n/a	n/a	n/a	n/a	n/a	n/a	n/a
Combustor(s)	n/a	n/a	n/a	n/a	n/a	n/a	n/a	n/a
Flared Produced Gas Emissions	n/a	n/a	n/a	n/a	n/a	n/a	n/a	n/a
Fugitive Emissions	n/a	n/a	n/a	n/a	n/a	n/a	n/a	n/a
Methanol Tank - 55-gallon drum	n/a	n/a	n/a	n/a	n/a	n/a	n/a	n/a
Glycol Tank - 55-gallon drum	n/a	n/a	n/a	n/a	n/a	n/a	n/a	n/a
Engine 1 (E-1)	0.03	0.14	0.03	0.13	0.03	0.13	0.00	0.00
Engine 2 (E-2)	0.03	0.14	0.03	0.13	0.03	0.13	0.00	0.00
Total	**0.13**	**0.59**	**0.13**	**0.57**	**0.13**	**0.57**	**0.00**	**0.00**

Notes:
BBL = Barrels
lb/hr = Pounds per hour
tpy = Tons per year
PM = Particulate matter
PM10 = Particulate matter of 10 microns or less
PM2.5 = Particulate matter of 2.5 microns or less
NOx = Nitrogen oxides
CO = Carbon monoxide
VOC = Volatile organic compounds
HAPs = Hazardous air pollutants
SO2 = Sulfur dioxides
n/a = Not applicable

Company: Crescent Point Energy U.S. Corp
Facility: Ute Tribal 13-16-3-1E-H1 & 4-21-3-1E-H1 Production Facility

Oil Production: 1,500 bbl/day
547,500 bbl/year

TABLE 2: Total Actual Emissions Summary Sheet (Continued)

Emissions Source	Benzene		Toluene		Ethylbenzene		Xylene	
	lb/hr	tpy	lb/hr	tpy	lb/hr	tpy	lb/hr	tpy
Crude Oil Storage Tanks - TK1 - TK18	0.00	0.02	0.00	0.02	0.00	0.00	0.00	0.00
Produced Water Tank(s)	n/a	n/a	n/a	n/a	n/a	n/a	n/a	n/a
Heater/Treater(s)	0.000	0.000	0.000	0.000	n/a	n/a	n/a	n/a
Tank Heaters	0.000	0.000	0.000	0.000	n/a	n/a	n/a	n/a
Oil Tank Truck Loading	0.008	0.034	0.007	0.030	0.000	0.002	0.002	0.009
Combustor(s)	n/a	n/a	n/a	n/a	n/a	n/a	n/a	n/a
Flared Produced Gas Emissions	0.001	0.003	0.001	0.003	0.000	0.000	0.000	0.002
Fugitive Emissions	0.001	0.005	0.001	0.004	0.000	0.000	0.000	0.001
Methanol Tank - 55-gallon drum	n/a	n/a	n/a	n/a	n/a	n/a	n/a	n/a
Glycol Tank - 55-gallon drum	n/a	n/a	n/a	n/a	n/a	n/a	n/a	n/a
Engine 1 (E-1)	0.003	0.011	n/a	n/a	n/a	n/a	n/a	n/a
Engine 2 (E-2)	0.003	0.011	n/a	n/a	n/a	n/a	n/a	n/a
Total	**0.019**	**0.082**	**0.012**	**0.053**	**0.001**	**0.004**	**0.004**	**0.017**

Emissions Source	Acetaldehyde		Acrolein		n-Hexane		Formaldehyde	
	lb/hr	tpy	lb/hr	tpy	lb/hr	tpy	lb/hr	tpy
Crude Oil Storage Tanks - TK1 - TK18	n/a	n/a	n/a	n/a	0.08	0.33	n/a	n/a
Produced Water Tank(s)	n/a	n/a	n/a	n/a	n/a	n/a	n/a	n/a
Heater/Treater(s)	n/a	n/a	n/a	n/a	0.005	0.021	0.000	0.001
Tank Heaters	n/a	n/a	n/a	n/a	0.012	0.051	0.000	0.002
Oil Tank Truck Loading	n/a	n/a	n/a	n/a	0.142	0.621	n/a	n/a
Combustor(s)	n/a	n/a	n/a	n/a	n/a	n/a	n/a	n/a
Flared Produced Gas Emissions	n/a	n/a	n/a	n/a	0.011	0.047	n/a	n/a
Fugitive Emissions	n/a	n/a	n/a	n/a	0.019	0.082	n/a	n/a
Methanol Tank - 55-gallon drum	n/a	n/a	n/a	n/a	n/a	n/a	n/a	n/a
Glycol Tank - 55-gallon drum	n/a	n/a	n/a	n/a	n/a	n/a	n/a	n/a
Engine 1 (E-1)	0.004	0.020	0.004	0.018	n/a	n/a	0.033	0.144
Engine 2 (E-2)	0.004	0.020	0.004	0.018	n/a	n/a	0.033	0.144
Total	**0.009**	**0.039**	**0.008**	**0.037**	**0.263**	**1.154**	**0.066**	**0.291**

Notes:
BBL = Barrels
lb/hr = Pounds per hour
tpy = Tons per year
PM = Particulate matter
PM10 = Particulate matter of 10 microns or less
PM2.5 = Particulate matter of 2.5 microns or less
NOx = Nitrogen oxides
CO = Carbon monoxide
VOC = Volatile organic compounds
HAPs = Hazardous air pollutants
SO2 = Sulfur dioxides
n/a = Not applicable

Crescent Point Energy U.S. Corp
Ute Tribal 13-16-3-1E-H1 & 4-21-3-1E-H1 Production Facility
Average Oil Analysis Detail Sheet

Mole (Vol.) Percent (%)	Component	Wellsite Name		
		Ute Tribal 15-18-4-2E	Ute Tribal 10-30-3-2E	Ute Tribal 1-5-4-2E
30.3083%	Methane	14.2940%	37.3020%	39.3290%
17.8703%	Ethane	17.2180%	19.1920%	17.2010%
48.1787%	*Total HC (Non-VOC)*	*31.5120%*	*56.4940%*	*56.5300%*
22.8830%	Propane	29.0850%	19.6270%	19.9370%
4.5973%	i-Butane	6.4540%	3.4820%	3.8560%
10.4910%	n-Butane	13.6040%	9.0050%	8.8640%
3.3380%	i-Pentane	4.6720%	2.5970%	2.7450%
3.9887%	n-Pentane	5.0800%	3.6400%	3.2460%
1.9680%	Hexanes	2.8280%	1.5690%	1.5070%
0.9570%	Heptanes	1.1250%	0.8920%	0.8540%
0.2323%	Octanes	0.2360%	0.2070%	0.2540%
0.0470%	Nonanes	0.0450%	0.0420%	0.0540%
0.0140%	Decanes+	0.0060%	0.0220%	0.0140%
0.0693%	Benzene	0.0780%	0.0770%	0.0530%
0.0513%	Toluene	0.0590%	0.0460%	0.0490%
0.0030%	Ethylbenzene	0.0030%	0.0020%	0.0040%
0.0133%	Xylene	0.0130%	0.0140%	0.0130%
1.1453%	n-Hexane	1.5590%	1.0740%	0.8030%
0.0000%	2,2,4-Trimethylpentane	0.0000%	0.0000%	0.0000%
49.7987%	*Total NMNE VOC [1]*	*64.8470%*	*42.2960%*	*42.2530%*
0.5917%	Carbon Dioxide	0.4000%	0.7160%	0.6590%
1.4307%	Nitrogen	3.2410%	0.4940%	0.5570%
0.0005%	Hydrogen Sulfide	0.0004%	0.0001%	0.0010%
0.0000%	Helium	0.0000%	0.0000%	0.0000%
100.0002%		**100.0004%**	**100.0001%**	**100.0000%**

158.33	Separator Temperature in degrees F	160	160	155
40.33	Separator Pressure in psia	30	45	46
34.44	API Gravity	32.82	36.89	33.61
1.37	Gas Specific Gravity	1.599	1.265	1.249
39.12	Molecular Wt	45.41	36.20	35.74
9.03	Gas-to-Oil Ratio (scf/bbl)	6.80	11.50	8.80
2,193	LHV BTU Content (Btu/scf):	2,513	2,045	2,020

1 NMNE VOC = Non-methane, non-ethane volatile organic compounds

Crescent Point Energy U.S. Corp
Ute Tribal 13-16-3-1E-H1 & 4-21-3-1E-H1 Production Facility
LOW PRESSURE GAS COMPOSITION CALCULATIONS
(REPRESENTATIVE SAMPLE COLLECTED FROM COLEMAN TRIBAL 2-18-4-2E WELLSITE ON 6/27/2011)

Component	Molecular Weight (lb/lb-mol)	Mole (Vol.) Percent (%)	Mole Frac.	Gas Weight (lb/lb-mol)	Weight Percent (%)	LHV BTU Content	
						Btu/scf	Btu/scf*Mole Frac
Methane	16.043	78.3766%	0.78377	12.57	58.680%	909.4	712.8
Ethane	30.069	9.8817%	0.09882	2.97	13.867%	1618.7	160.0
Total HC (Non-VOC)		*88.2583%*	*0.88258*	*15.55*	*72.546%*	*2528.1*	*872.7*
Propane	44.096	6.7479%	0.06748	2.98	13.886%	2314.90	156.21
i-Butane	58.122	0.9285%	0.00929	0.54	2.518%	3000.40	27.86
n-Butane	58.122	1.7060%	0.01706	0.99	4.627%	3010.80	51.36
i-Pentane	72.150	0.4337%	0.00434	0.31	1.460%	3699.00	16.04
n-Pentane	72.150	0.3980%	0.00398	0.29	1.340%	3703.90	14.74
Hexanes	86.110	0.1701%	0.00170	0.15	0.684%	4403.90	7.49
Heptanes	100.210	0.0981%	0.00098	0.10	0.459%	5100.30	5.00
Octanes	114.229	0.0339%	0.00034	0.04	0.181%	5796.20	1.96
Nonanes	128.260	0.0000%	0.00000	0.00	0.000%	6493.60	0.00
Decanes+	142.290	0.0000%	0.00000	0.00	0.000%	7189.90	0.00
Benzene	78.120	0.0064%	0.00006	0.00	0.023%	0.00	0.00
Toluene	92.130	0.0060%	0.00006	0.01	0.026%	0.00	0.00
Ethylbenzene	106.160	0.0006%	0.00001	0.00	0.003%	0.00	0.00
Xylene	106.160	0.0026%	0.00003	0.00	0.013%	0.00	0.00
n-Hexane	86.177	0.0995%	0.00100	0.09	0.400%	0.00	0.00
2,2,4-Trimethylpentane	114.230	0.0083%	0.00008	0.01	0.044%	0.00	0.00
Total NMNE VOC		*10.64%*	*0.10640*	*5.50*	*25.66%*	*44712.90*	*280.67*
Carbon Dioxide	44.01	0.4656%	0.00466	0.20	0.956%	0	0
Nitrogen	28.02	0.6365%	0.00637	0.18	0.832%	0	0
Hydrogen Sulfide	34.08	0.0000%	0.00000	0.00	0.000%	586.8	0
Helium	4.00	0.0000%	0.00000	0.00	0.000%	0	0
Oxygen	31.999	0.0000%	0.00000	0.00	0.000%	0	0
	Totals	**100.00%**	**100.00%**	**21.43**	**100.00%**		**1153.39**

Fraction of NMNE VOC[1]: **0.1064**
Gas Specific Gravity: **0.73966**
LHV BTU Content (Btu/scf): **1153.39**

1 NMNE VOC = Non-methane, non-ethane volatile organic compounds

Crescent Point Energy U.S. Corp
Ute Tribal 13-16-3-1E-H1 & 4-21-3-1E-H1 Production Facility - FI
Hydrocarbon Liquids Tank Detail Sheet

Source ID Number	TK1 - TK18	Gas Flashed Per Day	13,550.00 scf/day
Potential operation	8760 hr/yr	Gas Flashed Per Year	4945.75 Mscf/year
Daily Threshold Production	1,500 bpd		
Annual throughput	547,500 bbl/yr	Gas-to-Oil Ratio (scf/bbl)	9.03 scf/bbl

Component	Molecular Weight (lb/lb-mole)	Mole (Vol.) Percent (%)	Gas Weight (lb/lb-mol)	Weight Percent (%)	Flash Rate (Mscf/day)	Flash Rate (lb/hr)	Flash Rate (tons/yr)
Methane	16.043	30.3083%	4.8624	12.4197%	4.1068	7.243	31.7257
Ethane	30.069	17.8703%	5.3734	13.7251%	2.4214	8.005	35.0602
Propane	44.097	22.8830%	10.0907	25.7742%	3.1006	15.032	65.8393
i-Butane	58.124	4.5973%	2.6722	6.8254%	0.6229	3.981	17.4351
n-Butane	58.124	10.4910%	6.0978	15.5753%	1.4215	9.084	39.7865
i-Pentane	72.151	3.3380%	2.4084	6.1517%	0.4523	3.588	15.7142
n-Pentane	72.151	3.9887%	2.8779	7.3508%	0.5405	4.287	18.7773
Hexanes	86.178	1.9680%	1.6960	4.3320%	0.2667	2.526	11.0658
Heptanes	100.205	0.9570%	0.9590	2.4494%	0.1297	1.429	6.2570
Octanes	114.232	0.2323%	0.2654	0.6779%	0.0315	0.395	1.7317
Nonanes	128.259	0.0470%	0.0603	0.1540%	0.0064	0.090	0.3933
Decanes +	142.286	0.0140%	0.0199	0.0509%	0.0019	0.030	0.1300
Benzene	78.114	0.0693%	0.0542	0.1383%	0.0094	0.081	0.3534
Toluene	92.141	0.0513%	0.0473	0.1208%	0.0070	0.070	0.3086
Ethylbenzene	106.168	0.0030%	0.0032	0.0081%	0.0004	0.005	0.0208
Xylenes	106.168	0.0133%	0.0142	0.0362%	0.0018	0.021	0.0924
n-Hexane	86.178	1.1453%	0.9870	2.5211%	0.1552	1.470	6.4401
2,2,4-Trimethylpentane	114.229	0.0000%	0.0000	0.0000%	0.0000	0.000	0.0000
Carbon Dioxide	44.010	0.5917%	0.2604	0.6651%	0.0802	0.388	1.6990
Nitrogen	28.013	1.4307%	0.4008	1.0237%	0.1939	0.597	2.6150
Hydogen Sulfide	34.076	0.0005%	0.0002	0.0004%	0.0001	0.000	0.0011
Helium	4.003	0.0000%	0.0000	0.0000%	0.0000	0.000	0.0000
Oxygen	31.999	0.0000%	0.0000	0.0000%	0.0000	0.000	0.0000
VOC TOTAL		**49.80%**	**28.2533**	**72.17%**	**6.75**	**42.09**	**184.35**
HAP SUBTOTAL		**1.28%**	**1.1058**	**2.82%**	**0.17**	**1.65**	**7.215**
TOTAL		100.00%	39.1504	100.00%	13.55	58.32	255.45

Separator Temperature (° F):	158.33
Separator Pressure (psia):	40.33
API Gravity:	25.60
Gas Specific Gravity:	1.37
Molecular Weight:	39.12
Gas-to-Oil Ratio (scf/bbl):	9.03

Crescent Point Energy U.S. Corp
Ute Tribal 13-16-3-1E-H1 & 4-21-3-1E-H1 Production Facility
Flash Gas Tank Emissions Summary Detail Sheet

Source ID Number	TK1 - TK18	Potential operation	8,760	hr/yr
		Recent Production	1500.0	bpd
Tank Description	Crude Oil Storage			
		Annual throughput	547,500.0	bbl/yr
			22,995,000	gal/yr

Potential Flash Emissions

Pollutant	Hrs of Operation (hrs/yr)	Estimated Flash Losses (lb/hr)	(tpy)	(lb/yr)	Source of Emission Factor
VOC	8,760	42.0880	184.3453	368,690.56	Flash Gas Analysis
HAPs	8,760	1.6473	7.2152	14,430.42	Flash Gas Analysis
Benzene	8,760	0.0807	0.3534	706.75	Flash Gas Analysis
Toluene	8,760	0.0705	0.3086	617.23	Flash Gas Analysis
Ethlybenzene	8,760	0.0047	0.0208	41.56	Flash Gas Analysis
Xylene	8,760	0.0211	0.0924	184.72	Flash Gas Analysis
N-Hexane	8,760	1.4703	6.4401	12,880.16	Flash Gas Analysis
Methane[2]	8,760	7.2433	31.7257	63,451.31	Flash Gas Analysis
Carbon Dioxide[2]	8,760	0.3879	1.6990	3,397.98	Flash Gas Analysis
Nitrous Oxide	8,760	n/a	n/a	n/a	No data available

Crescent Point Energy U.S. Corp
Ute Tribal 13-16-3-1E-H1 & 4-21-3-1E-H1 Production Facility
Storage, Working, and Breathing Emissions Detail Sheet

Source ID Number	TK1 - TK18	Potential operation	8,760	hr/yr
		Recent Production	1500.0	bpd
Tank Description	18 1000-bbl tanks			
Tank Usage	Crude Oil Storage	Annual throughput	547,500.0	bbl/yr
Tank Capacity	18,000 bbl		22,995,000	gal/yr
Number of tanks	18			

Potential emissions per tank

Pollutant	Hrs of Operation (hrs/yr)	Estimated Storage/Working/Breathing Losses (lb/hr)	(tpy)	(lb/yr)	Source of Emission Factor
VOC - Working	8,760	0.07	0.29	578.81	TANKS 4.0.9D
VOC - Breathing	8,760	0.00	0.00	0.00	TANKS 4.0.9D
Total		0.07	0.29	578.81	TANKS 4.0.9D

Potential emissions all tanks

Pollutant	Hrs of Operation (hrs/yr)	Estimated Flash Losses (lb/hr)	(tpy)	(lb/yr)	Source of Emission Factor
VOC	8,760	1.19	5.21	10418.6	TANKS 4.0.9D
HAPs	8,760	0.05	0.204	407.8	Flash Gas Analysis
Benzene	8,760	0.0023	0.010	20.0	Flash Gas Analysis
Toluene	8,760	0.0020	0.009	17.4	Flash Gas Analysis
Ethlybenzene	8,760	0.0001	0.001	1.2	Flash Gas Analysis
Xylene	8,760	0.0006	0.003	5.2	Flash Gas Analysis
N-Hexane	8,760	0.0415	0.182	364.0	Flash Gas Analysis
Methane	8,760	0.0000	0.000	0.0	Flash Gas Analysis
Carbon dioxide	8,760	0.0000	0.000	0.0	Flash Gas Analysis
Nitrous Oxides		n/a	n/a	n/a	n/a

[1] See TANKS 4.0.9D output attached.

[2] Total wellsite oil throughput divided by the number of storage tanks used to calculate emissions.

Note: HAP emissions determined by multiplying by ratio of each HAP to VOCs calculated on the "Flash Gas Tank Emissions Sum

Crescent Point Energy U.S. Corp
Ute Tribal 13-16-3-1E-H1 & 4-21-3-1E-H1 Production Facility
Total Tank Emissions Detail Sheet

Source ID Number	TK1 - TK18	Potential operation	8,760	hr/yr
Tank Usage	Crude Oil Storage	Recent Production	1500.0	bpd
		Annual throughput	547,500.0	bbl/yr
			22,995,000	gal/yr

Potential Emissions - Flashing, Storage, Working, and Breathing

Pollutant	Hrs of Operation (hrs/yr)	Estimated Total Losses (lb/hr)	(tpy)	(lb/yr)	Source of Emission Factor	Ratio to TPY of VOC Emissions
VOC	8,760	43.28	189.55	379,109.14	Flash Gas Analysis; TANKS 4.0.9D	-
HAPs	8,760	1.69	7.42	14,838.20	Flash Gas Analysis; TANKS 4.0.9D	3.9140%
Benzene	8,760	0.0830	0.36	726.72	Flash Gas Analysis; TANKS 4.0.9D	0.1917%
Toluene	8,760	0.0725	0.32	634.67	Flash Gas Analysis; TANKS 4.0.9D	0.1674%
Ethlybenzene	8,760	0.0049	0.02	42.74	Flash Gas Analysis; TANKS 4.0.9D	0.0113%
Xylene	8,760	0.0217	0.09	189.94	Flash Gas Analysis; TANKS 4.0.9D	0.0501%
N-Hexane	8,760	1.5119	6.62	13,244.13	Flash Gas Analysis; TANKS 4.0.9D	3.4935%
Methane	8,760	7.2433	31.73	63,451.31	Flash Gas Analysis; TANKS 4.0.9D	16.7370%
Carbon dioxide	8,760	0.3879	1.70	3,397.98	Flash Gas Analysis; TANKS 4.0.9D	0.8963%
Nitrous oxide	8,760	0.0000	0.00	0.00	Flash Gas Analysis; TANKS 4.0.9D	

Emissions Controlled (by flare with 95% control efficiency)

Pollutant	Hrs of Operation (hrs/yr)	Estimated Flash/Working/Breathing Losses (lb/hr)	(tpy)	(lb/yr)	Source of Emission Factor
VOC	8,760	2.16	9.478	18955.5	Lab Measurement & TANKS 4.0.9D
HAPs	8,760	0.08	0.371	741.9	Lab Measurement & TANKS 4.0.9D

Crescent Point Energy U.S. Corp
Ute Tribal 13-16-3-1E-H1 & 4-21-3-1E-H1 Production Facility
Combustor Detail Sheet - Storage Tanks

Source Description:	**COMBUSTOR(S)**	Max. Oil Production	1,500	bbl/day
		Hydrocarbon Oil Tank Vapors Recovered and Sent to Combustor	13.55	Mscf/day
Maximum Combustor Rating:	46.8 MMBtu/hr			
		Maximum Combustor Rating	46.80	MMBtu/hr
		Maximum Combustor Potential Fuel Usage:	159.14	MMscf/yr
		Maximum Daily Oil Flash Gas Production	0.0136	MMscf/day
		Potential Fuel Usage (Oil Flash Gas)	4.95	MMscf/yr
Sale Gas Fuel Heating Value:	1,153 Btu/scf			
Flashed Gas Fuel Heating Value:	2,193 Btu/scf	Control Efficiency	95.00%	
Pilot Light Heat Input Rating:	0.14 MMBtu/hr	Pilot Gas Usage	0.58	MMscf/yr
		Total Potential Fuel Usage	5.53	MMscf/yr

Potential Emissions from Oil Flash Gas Flared Daily

Pollutant	Emission Factor lb/MMBtu	Hrs of Operation (hrs/yr)	Estimated Emissions (lb/hr)	(tpy)	(lb/yr)	Source of Emission Factors
TOC	0.14	8,760	0.173	0.76	1518.21	AP-42 Table 13.5-1
NOx	0.068	8,760	0.084	0.37	737.42	AP-42 Table 13.5-1
CO	0.31	8,760	0.384	1.68	3361.76	AP-42 Table 13.5-2

Potential Emissions from Flare Pilot Light

Pollutant	Emission Factor lb/MMBtu	Hrs of Operation (hrs/yr)	Estimated Emissions (lb/hr)	(tpy)	(lb/yr)	Source of Emission Factors
TOC	0.14	8,760	0.011	0.05	93.65	AP-42 Table 13.5-1
NOx	0.068	8,760	0.005	0.02	45.49	AP-42 Table 13.5-1
CO	0.31	8,760	0.024	0.10	207.38	AP-42 Table 13.5-2

Note: The actual make and model of the combustor(s) is dependent upon actual production and corresponding emissions, as per NSPS Supart OOOOa. The make and model depicted represents the anticipated maximum MMBtu/hr rating.

Crescent Point Energy U.S. Corp
Ute Tribal 13-16-3-1E-H1 & 4-21-3-1E-H1 Production Facility
Loadout Emissions Detail Sheet

Source ID Number	OL	Potential operation	4211.5	hr/yr
Source Description	Truck Loading	Max. Daily rate of bbl	1500.0	bbl
Source Usage	Oil Loadout			

Potential Emissions

	17.78	tpy VOC	97.45	lb/day VOC

Estimated Fugitive Emissions (See AP-42 Section 5.2)

Molecular Weight of Vapors, MW	39.12	lb/lb-mol	From facility oil sample analysis
True Vapor Pressure, Pva @ T	3.20	psia	at T=145 for RVP 0.18
Crude Oil Temperature	145	F	Heated temperature of storage tanks
	605	R	
Saturation Factor	0.6		Dedicated service, submerged loading. AP-42, Table 5.2-1.
Annual throughput, v	22,995	1000 gallons of Condensed Hydrocarbon Liquid	
Loading losses, L @ tank L = 12.46 S P MW / T (1-eff)	1.55	lb/1000 gallons	Emission Factor and equation from AP-42, Chapter 5.2.
Annual losses @ tank, L*v	35,567.98	lb/yr	
Loading Rate	5,460	gallons/hr	One 130-bbl truck loaded in one hour.
Annual Hrs of Operation	4211.5	hr/yr	
Hourly VOC During Loading	**8.45**	**lb/hr**	
Annual VOC tpy during loading	**17.78**	**tons/yr**	
			Ratio of HAPs to VOC Emissions
Annual HAPs tpy during loading	0.696	tons/yr	3.9140%
Annual Benzene tpy during loading	0.034	tons/yr	0.1917%
Annual Toluene tpy during loading	0.030	tons/yr	0.1674%
Annual Ethylbenzene tpy during loading	0.002	tons/yr	0.0113%
Annual Xylene tpy during loading	0.009	tons/yr	0.0501%
Annual n-Hexane tpy during loading	0.621	tons/yr	3.4935%
Annual Methane (CH4) tpy during loading	2.976	tons/yr	16.7370%
Annual Carbon Dioxide (CO_2) tpy during loading	0.159	tons/yr	0.8963%

Crescent Point Energy U.S. Corp
Ute Tribal 13-16-3-1E-H1 & 4-21-3-1E-H1 Production Facility
Natural Gas Burner Detail Sheet

Equipment ID	HT-1, HT-2			
Source Description	Heater Treater(s)	Potential operation	8760	hr/yr
Equipment Usage	Total of 2.5 MMBtu/hr	Potential fuel usage	18.99	MMscf/yr
			2,168	scf/hr

Fuel Type	Field Gas	1 Metric Ton	2204.62	pounds
Net Fuel Heating Value	1,153 Btu/scf	1 Kilogram	2.20462	pounds
		Fuel Heating Value-Producing	1153.4	Btu/scf
Heat Input	2.50 MMBtu/hr	Exit Temperature	400	deg F
Permit Status		Volume Flow Rate	180	ft^3/min
Burner Efficiency	80 %			

Potential Emissions

Pollutant	Emission Factor (lb/MMscf)	Nominal Rating (MMBtu/hr)	Hrs of Operation (hrs/yr)	Estimated Emissions (lb/hr)	Estimated Emissions (tpy)	Source of Emission Factor
NOx	100.00	2.50	8,760	0.27	1.19	AP-42 Table 1.4-1
CO	84.00	2.50	8,760	0.23	1.00	AP-42 Table 1.4-1
TOC	11.00	2.50	8,760	0.03	0.13	AP-42 Table 1.4-2
VOC	5.50	2.50	8,760	0.01	0.07	AP-42 Table 1.4-2
SO_2	0.00	2.50	8,760	0.00	0.00	Gas Analysis
$PM/PM_{10}/PM_{2.5}$	7.60	2.50	8,760	0.02	0.09	AP-42 Table 1.4-2
HAPs	NA	2.50	8,760	0.01	0.02	Summary of HAPs
Benzene	2.10E-03	2.50	8,760	0.00	0.00	AP-42 Table 1.4-3
Toluene	3.40E-03	2.50	8,760	0.00	0.00	AP-42 Table 1.4-3
n-Hexane	1.80E+00	2.50	8,760	0.00	0.02	AP-42 Table 1.4-3
Formaldehyde	7.50E-02	2.50	8,760	0.00	0.00	AP-42 Table 1.4-3

Pollutant	Emission Factor (kg CO_2/MMBtu	Nominal Rating (MMBtu/hr)	Hrs of Operation (hrs/yr)	Estimated Emissions (lb/hr)	Estimated Emissions metric tons per year (MTPY)	Source of Emission Factor
CH_4	1.00E-03	2.50	8,760	0.01	0.02	Title 40, Part 98, Subpart C, Table C-2
CO_2	53.06	2.50	8,760	292.44	1,162.01	Title 40, Part 98, Subpart C, Table C-1
N_2O	1.00E-04	2.50	8,760	0.00	0.00	Title 40, Part 98, Subpart C, Table C-2

Natural gas burner emissions for criteria pollutants can be estimated using the following equation:

$$E_X = \frac{EF_X \times BR \times 10^6 \times HO}{\frac{B_{EFF}}{100} \times HV_{Avg} \times 10^6 \times 2000} \times \frac{HV_{Prod}}{HV_{Avg}} \times \left(\frac{(100 - DRE)}{100} \right)$$

where:
EX = emissions for pollutant X (tpy);
EFX = emission factor for pollutant X (lb/MMscf);
BR = burner rating (MMBtu/hr);
BEff = burner efficiency (%);
HO = annual hours of operation (hr/yr);
HVAvg = average gas heating value (Btu/scf);
HVProd = produced gas heating value (Btu/scf);
DRE = destruction and removal efficiency (%);
1-ton = 2000-lb;
1-MMBtu = 106-Btu; and
1-MMscf = 106-scf.

Natural gas burner emissions for GHG pollutants can be estimated using the following equation:

$$CO2 = 1 \times 10^{-3} \times \text{Fuel Consumption} \times \text{Heating Value} \times \text{Emission Factor}$$

where:
CO2 = Annual CO2 mass emissions for natural gas combustion
Fuel Consumption = Annual fuel consumption in MMscf per year.
Heating Value = Heating value of natural gas in Btu per scf.
Emission Factor = in kilograms (kg) CO2 per MMBtu.

Crescent Point Energy U.S. Corp
Ute Tribal 13-16-3-1E-H1 & 4-21-3-1E-H1 Production Facility
Natural Gas Burners Detail Sheet

Equipment ID	HEATERS		
Source Description	Tank Heaters	Potential operation	8,760
Equipment Usage	Total of 6 MMBtu/hr	Potential fuel usage	46 MMscf/yr
			5,202 scf/hr

Fuel Type	Field Gas	1 Metric Ton	2,205 pounds
Net Fuel Heating Value	1,153 Btu/scf	1 Kilogram	2 pounds
		Fuel Heating Value-Producing	1,153 Btu/scf
Heat Input	6.000 MMBtu/hr	Exit Temperature	400 deg F
		Volume Flow Rate	180 ft^3/min
Burner Efficiency	80 %	Destruction Efficiency	

Potential Emissions

Pollutant	Emission Factor (lb/MMscf)	Nominal Rating (MMBtu/hr)	Hrs of Operation (hrs/yr)	Estimated Emissions (lb/hr)	Estimated Emissions (tpy)	Source of Emission Factor
NOx	100.00	6.00	8,760	0.65	2.85	AP-42 Table 1.4-1
CO	84.00	6.00	8,760	0.55	2.39	AP-42 Table 1.4-1
TOC	11.00	6.00	8,760	0.07	0.31	AP-42 Table 1.4-2
VOC	5.50	6.00	8,760	0.04	0.16	AP-42 Table 1.4-2
SO_2	0.00	6.00	8,760	0.00	0.00	Gas Analysis
$PM/PM_{10}/PM_{2.5}$	7.60	6.00	8,760	0.05	0.22	AP-42 Table 1.4-2
HAPs	NA	6.00	8,760	0.01	0.05	Summary of HAPs
Benzene	2.10E-03	6.00	8,760	0.00	0.00	AP-42 Table 1.4-3
Toluene	3.40E-03	6.00	8,760	0.00	0.00	AP-42 Table 1.4-3
n-Hexane	1.80E+00	6.00	8,760	0.01	0.05	AP-42 Table 1.4-3
Formaldehyde	7.50E-02	6.00	8,760	0.00	0.00	AP-42 Table 1.4-3

Pollutant	Emission Factor (kg CO_2/MMBtu	Nominal Rating (MMBtu/hr)	Hrs of Operation (hrs/yr)	Estimated Emissions (lb/hr)	Estimated Emissions metric tons per year (MTPY)	Source of Emission Factor
CH_4	1.00E-03	6.00	8,760	0.01	0.05	Title 40, Part 98, Subpart C, Table C-2
CO_2	53.06	6.00	8,760	701.86	2,788.83	Title 40, Part 98, Subpart C, Table C-1
N_2O	1.00E-04	6.00	8,760	0.00	0.01	Title 40, Part 98, Subpart C, Table C-2

Natural gas burner emissions for criteria pollutants can be estimated using the following equation:

$$E_X = \frac{EF_X \times BR \times 10^6 \times HO}{\frac{B_{EFF}}{100} \times HV_{Avg} \times 10^6 \times 2000} \times \frac{HV_{Prod}}{HV_{Avg}} \times \left(\frac{(100 - DRE)}{100} \right)$$

where:
EX = emissions for pollutant X (tpy);
EFX = emission factor for pollutant X (lb/MMscf);
BR = burner rating (MMBtu/hr);
BEff = burner efficiency (%);
HO = annual hours of operation (hr/yr);
HVAvg = average gas heating value (Btu/scf);
HVProd = produced gas heating value (Btu/scf);
DRE = destruction and removal efficiency (%);
1-ton = 2000-lb;
1-MMBtu = 106-Btu; and
1-MMscf = 106-scf.

Natural gas burner emissions for GHG pollutants can be estimated using the following equation:

$$CO2 = 1 \times 10^{-3} \times \text{Fuel Consumption} \times \text{Heating Value} \times \text{Emission Factor}$$

where:
CO2 = Annual CO2 mass emissions for natural gas combustion
Fuel Consumption = Annual fuel consumption in MMscf per year.
Heating Value = Heating value of natural gas in Btu per scf.
Emission Factor = in kilograms (kg) CO2 per MMBtu.

Crescent Point Energy U.S. Corp
Produced Gas Venting Analysis
Produced Gas Venting Emissions Detail Sheet

Gas Vented Per Year 8.40 MMscf/year
Emission Controls Flare

Component	Molecular Weight (lb/lb-mole)	Mole (Vol.) Percent (%)	Gas Weight (lb/lb-mol)	Weight Percent (%)	Rate (Mscf/day)	Uncontrolled Emissions		Controlled Emissions	
						Rate (lb/hr)	Rate (tons/yr)	Rate (lb/hr)	Rate (tons/yr)
Methane	16.043	78.3766%	12.5740	58.68%	18.0266	31.7533	139.0793	1.5877	6.9540
Ethane	30.069	9.8817%	2.9713	13.8664%	2.2728	7.5036	32.8656	0.3752	1.6433
Propane	44.097	6.7479%	2.9756	13.8864%	1.5520	7.5144	32.9130	0.3757	1.6457
i-Butane	58.124	0.9285%	0.5397	2.5186%	0.2136	1.3629	5.9694	0.0681	0.2985
n-Butane	58.124	1.7060%	0.9916	4.6275%	0.3924	2.5041	10.9679	0.1252	0.5484
i-Pentane	72.151	0.4337%	0.3129	1.4603%	0.0998	0.7902	3.4612	0.0395	0.1731
n-Pentane	72.151	0.3980%	0.2872	1.3401%	0.0915	0.7252	3.1763	0.0363	0.1588
Hexanes	86.178	0.1701%	0.1466	0.6841%	0.0391	0.3702	1.6214	0.0185	0.0811
Heptanes	100.205	0.0981%	0.0983	0.4587%	0.0226	0.2482	1.0873	0.0124	0.0544
Octanes	114.232	0.0339%	0.0387	0.1807%	0.0078	0.0978	0.4283	0.0049	0.0214
Nonanes	128.259	0.0000%	0.0000	0.0000%	0.0000	0.0000	0.0000	0.0000	0.0000
Decanes +	142.286	0.0000%	0.0000	0.0000%	0.0000	0.0000	0.0000	0.0000	0.0000
Benzene	78.114	0.0064%	0.0050	0.0233%	0.0015	0.0126	0.0553	0.0006	0.0028
Toluene	92.141	0.0060%	0.0055	0.0258%	0.0014	0.0140	0.0611	0.0007	0.0031
Ethylbenzene	106.168	0.0006%	0.0006	0.0030%	0.0001	0.0016	0.0070	0.0001	0.0004
Xylenes	106.168	0.0026%	0.0028	0.0129%	0.0006	0.0070	0.0305	0.0003	0.0015
n-Hexane	86.178	0.0995%	0.0857	0.4002%	0.0229	0.2165	0.9484	0.0108	0.0474
2,2,4-Trimethylpentane	114.229	0.0083%	0.0095	0.0442%	0.0019	0.0239	0.1049	0.0012	0.0052
Carbon Dioxide	44.01	0.4656%	0.2049	0.9563%	0.1071	0.5175	2.2665	0.0259	0.1133
Nitrogen	28.0134	0.6365%	0.1783	0.8321%	0.1464	0.4503	1.9722	0.0225	0.0986
Hydogen Sulfide	34.076	0.0000%	0.0000	0.0000%	0.0000	0.0000	0.0000	0.0000	0.0000
Helium	4.00	0.0000%	0.0000	0.0000%	0.0000	0.0000	0.0000	0.0000	0.0000
Oxygen	31.9988	0.0000%	0.0000	0.0000%	0.0000	0.0000	0.0000	0.0000	0.0000
VOC SUBTOTAL		**0.1063**	**5.4903**	**25.6216%**	**2.4452**	**13.8886**	**60.8321**	**0.6944**	**3.0416**
HAP SUBTOTAL		**0.0012**	**0.0997**	**0.0047**	**0.0265**	**0.2756**	**1.2073**	**0.0138**	**0.0604**
TOTAL		1.0000	21.4282	1.0000	23.0000	54.1132	237.0157	2.7057	11.8508

Crescent Point Energy U.S. Corp
Ute Tribal 13-16-3-1E-H1 & 4-21-3-1E-H1 Production Facility
Flare Detail Sheet - Produced Gas

Source ID Number **FLARE**

Annual Produced Gas Flared	8.40	MMscf/yr		
Sale Gas Fuel Heating Value	1,153	Btu/scf	Control Efficiency	95.00%
Pilot Light Heat Input Rating	0.06	MMBtu/hr	Pilot Gas Usage	0.46 MMscf/yr
			Total Potential Fuel Usage	8.40 MMscf/yr

Potential Emissions from Sales Gas Flared Daily

Pollutant	Emission Factor lb/MMBtu	Hrs of Operation (hrs/yr)	Estimated Emissions (lb/hr)	(tpy)	(lb/yr)	Source of Emission Factors
NOx	0.068	8,760	0.075	0.33	658.42	AP-42 Table 13.5-1
CO	0.31	8,760	0.343	1.50	3,001.63	AP-42 Table 13.5-2

Potential Emissions from Flare Pilot Light

Pollutant	Emission Factor lb/MMBtu	Hrs of Operation (hrs/yr)	Estimated Emissions (lb/hr)	(tpy)	(lb/yr)	Source of Emission Factors
TOC	0.14	8,760	0.008	0.04	74.28	AP-42 Table 13.5-1
NOx	0.068	8,760	0.004	0.02	36.08	AP-42 Table 13.5-1
CO	0.31	8,760	0.019	0.08	164.47	AP-42 Table 13.5-2

Total Potential Emissions

Pollutant	Emission Factor lb/MMBtu	Hrs of Operation (hrs/yr)	Estimated Emissions (lb/hr)	(tpy)	(lb/yr)	Source of Emission Factors
TOC	0.14	8,760	0.008	0.04	74.28	AP-42 Table 13.5-1
NOx	0.068	8,760	0.079	0.35	694.50	AP-42 Table 13.5-1
CO	0.31	8,760	0.361	1.58	3,166.10	AP-42 Table 13.5-2

Crescent Point Energy U.S. Corp
Ute Tribal 13-16-3-1E-H1 & 4-21-3-1E-H1 Production Facility - Engine 1 (E-1)

Pumpjack Engine Detail Sheet - Uncontrolled

Engine Build Year:	Post 1/1/2011	**Rebuild Year:**	Not applicable
Engine Make & Model:	Doosan D14.6L	**Engine Type:**	4-Stroke Rich Burn
Total Horsepower:	449	**Heat Rating:**	3.209 MMBtu/hr

Given

Fuel Usage	66.77	MCFD	
Fuel Usage	24.37	MMCF/YR	
NOx Emission Factor	1.00	g/hp-hr	*40 CFR Part 60, Subpart JJJJ*
CO Emission Factor	2.00	g/hp-hr	*40 CFR Part 60, Subpart JJJJ*
Total PM Emission Factor	9.91E-03	lb/MMBtu	*AP-42 - Table 3.2-3 - 4-stroke rich-burn engines*
Total $PM_{10}/PM_{2.5}$ Emission Factor	9.50E-03	lb/MMBtu	*AP-42 - Table 3.2-3 - 4-stroke rich-burn engines*
VOC Emission Factor	3.58E-01	lb/MMBtu	*AP-42 - Table 3.2-3 - 4-stroke rich-burn engines*
Sulfur Emission Factor	0	lb/MMBtu	*No hydrogen sulfide indicated in gas analysis.*
Formaldehyde Emission Factor	2.05E-02	lb/MMBtu	*AP-42 - Table 3.2-3 - 4-stroke rich-burn engines*
Acetaldehyde Emission Factor	2.79E-03	lb/MMBtu	*AP-42 - Table 3.2-3 - 4-stroke rich-burn engines*
Acrolein Emission Factor	2.63E-03	lb/MMBtu	*AP-42 - Table 3.2-3 - 4-stroke rich-burn engines*
Benzene Emission Factor	1.58E-03	lb/MMBtu	*AP-42 - Table 3.2-3 - 4-stroke rich-burn engines*
Methanol Emission Factor	3.06E-03	lb/MMBtu	*AP-42 - Table 3.2-3 - 4-stroke rich-burn engines*
Methane (CH_4) Emission Factor	1.00E-03	kg CO_2/MMBtu	*40 CFR Part 98, Subpart C, Table C-2*
Carbon Dioxide (CO_2) Emission Factor	53.06	kg CO_2/MMBtu	*40 CFR Part 98, Subpart C, Table C-1*
Nitrous Oxide (N_2O) Emission Factor	1.00E-04	kg CO_2/MMBtu	*40 CFR Part 98, Subpart C, Table C-2*
Engine Rating	449	hp	
% runtime in field	100%		
Produced Gas Heating Value (HHV)	1153	Btu/scf	
Fuel Consumption Rate (Btu/hp-hr)	7,146	Btu/hp-hr	
Conversion Factor	2204.62	lb/metric ton	
Conversion Factor	1.10231	metric ton/std. ton	
Conversion Factor	0.90718	std. ton/metric ton	
Conversion Factor	24	hr/day	
Conversion Factor	1000000	Btu/MMBtu	
Conversion Factor	8760	hr/yr	
Conversion Factor	2000	lb/std. ton	
Conversion Factor	454	g/lb	

Calculations

	Emissions (Uncontrolled)	
Pollutant	lb/hr	tons/year
NOx	0.99	4.33
CO	1.98	8.66
VOC	1.15	5.03
PM	3.18E-02	1.39E-01
PM_{10}	3.05E-02	1.34E-01
$PM_{2.5}$	3.05E-02	1.34E-01
SO_2	0.00E+00	0.00E+00
HAPs	9.81E-02	4.30E-01
Formaldehyde	6.58E-02	2.88E-01
Acetaldehyde	8.95E-03	3.92E-02
Acrolein	8.44E-03	3.70E-02
Benzene	5.07E-03	2.22E-02
Methanol	9.82E-03	4.30E-02
	lb/hr	metric tons/year
CH_4	0.007	0.028
CO_2	375.35	1491.45
N_2O	0.00	0.00

Equations

Pollutant Emission Rate = Emission Factor x Engine Rating x Conversion Factor

PM/PM10/PM2.5 Emission Rate = Emission Factor x Fuel Usage x Fuel Heating Value x Conversion Factors

Crescent Point Energy U.S. Corp
Ute Tribal 13-16-3-1E-H1 & 4-21-3-1E-H1 Production Facility - Engine 1 (E-1)

Pumpjack Engine Detail Sheet - Controlled

Engine Build Year:	Post 1/1/2011	**Rebuild Year:**	Not applicable
Engine Make & Model:	Doosan D14.6L	**Engine Type:**	4-Stroke Rich Burn
Total Horsepower:	449	**Heat Rating:**	3.209 MMBtu/hr

Given

Fuel Usage	66.77	MCFD	
Fuel Usage	24.37	MMCF/YR	
NOx Emission Factor	1.00	g/hp-hr	*40 CFR Part 60, Subpart JJJJ*
CO Emission Factor	2.00	g/hp-hr	*40 CFR Part 60, Subpart JJJJ*
Total PM Emission Factor	9.91E-03	lb/MMBtu	*AP-42 - Table 3.2-3 - 4-stroke rich-burn engines*
Total $PM_{10}/PM_{2.5}$ Emission Factor	9.50E-03	lb/MMBtu	*AP-42 - Table 3.2-3 - 4-stroke rich-burn engines*
VOC Emission Factor	7.00E-01	g/hp-hr	*40 CFR Part 60, Subpart JJJJ*
Sulfur Emission Factor	0	lb/MMBtu	*No hydrogen sulfide indicated in gas analysis.*
Formaldehyde Emission Factor	1.03E-02	lb/MMBtu	*Catalyst Spec & AP-42 - Table 3.2-3 - 4-stroke rich-burn engines*
Acetaldehyde Emission Factor	1.40E-03	lb/MMBtu	*Catalyst Spec & AP-42 - Table 3.2-3 - 4-stroke rich-burn engines*
Acrolein Emission Factor	1.32E-03	lb/MMBtu	*Catalyst Spec & AP-42 - Table 3.2-3 - 4-stroke rich-burn engines*
Benzene Emission Factor	7.90E-04	lb/MMBtu	*Catalyst Spec & AP-42 - Table 3.2-3 - 4-stroke rich-burn engines*
Methanol Emission Factor	1.53E-03	lb/MMBtu	*Catalyst Spec & AP-42 - Table 3.2-3 - 4-stroke rich-burn engines*
Methane (CH_4) Emission Factor	1.00E-03	kg CO_2/MMBtu	*40 CFR Part 98, Subpart C, Table C-2*
Carbon Dioxide (CO_2) Emission Factor	53.06	kg CO_2/MMBtu	*40 CFR Part 98, Subpart C, Table C-1*
Nitrous Oxide (N_2O) Emission Factor	1.00E-04	kg CO_2/MMBtu	*40 CFR Part 98, Subpart C, Table C-2*
Engine Rating	449	hp	
% runtime in field	100%		
Produced Gas Heating Value (HHV)	1153	Btu/scf	
Fuel Consumption Rate (Btu/hp-hr)	7,146	Btu/hp-hr	
Conversion Factor	2204.62	lb/metric ton	
Conversion Factor	1.10231	metric ton/std. ton	
Conversion Factor	0.90718	std. ton/metric ton	
Conversion Factor	24	hr/day	
Conversion Factor	1000000	Btu/MMBtu	
Conversion Factor	8760	hr/yr	
Conversion Factor	2000	lb/std. ton	
Conversion Factor	454	g/lb	

Calculations

	Emissions (Controlled)	
Pollutant	lb/hr	tons/year
NOx	0.99	4.33
CO	1.98	8.66
VOC	6.92E-01	3.03E+00
PM	3.18E-02	1.39E-01
PM_{10}	3.05E-02	1.34E-01
$PM_{2.5}$	3.05E-02	1.34E-01
SO_2	0.00E+00	0.00E+00
HAPs	4.90E-02	2.15E-01
Formaldehyde	3.29E-02	1.44E-01
Acetaldehyde	4.48E-03	1.96E-02
Acrolein	4.22E-03	1.85E-02
Benzene	2.53E-03	1.11E-02
Methanol	4.91E-03	2.15E-02
	lb/hr	metric tons/year
CH_4	0.01	0.03
CO_2	375.35	1491.45
N_2O	0.00	0.00

Equations

Pollutant Emission Rate = Emission Factor x Engine Rating x Conversion Factor

PM/PM10/PM2.5 Emission Rate = Emission Factor x Fuel Usage x Fuel Heating Value x Conversion Factors

Crescent Point Energy U.S. Corp
Ute Tribal 13-16-3-1E-H1 & 4-21-3-1E-H1 Production Facility - Engine 2 (E-2)

Pumpjack Engine Detail Sheet - Uncontrolled

Engine Build Year:	Post 1/1/2011	**Rebuild Year:**	Not applicable
Engine Make & Model:	Doosan D14.6L	**Engine Type:**	4-Stroke Rich Burn
Total Horsepower:	449	**Heat Rating:**	3.209 MMBtu/hr

Given

Fuel Usage	66.77	MCFD	
Fuel Usage	24.37	MMCF/YR	
NOx Emission Factor	1.00	g/hp-hr	*40 CFR Part 60, Subpart JJJJ*
CO Emission Factor	2.00	g/hp-hr	*40 CFR Part 60, Subpart JJJJ*
Total PM Emission Factor	9.91E-03	lb/MMBtu	*AP-42 - Table 3.2-3 - 4-stroke rich-burn engines*
Total $PM_{10}/PM_{2.5}$ Emission Factor	9.50E-03	lb/MMBtu	*AP-42 - Table 3.2-3 - 4-stroke rich-burn engines*
VOC Emission Factor	3.58E-01	lb/MMBtu	*AP-42 - Table 3.2-3 - 4-stroke rich-burn engines*
Sulfur Emission Factor	0	lb/MMBtu	*No hydrogen sulfide indicated in gas analysis.*
Formaldehyde Emission Factor	2.05E-02	lb/MMBtu	*AP-42 - Table 3.2-3 - 4-stroke rich-burn engines*
Acetaldehyde Emission Factor	2.79E-03	lb/MMBtu	*AP-42 - Table 3.2-3 - 4-stroke rich-burn engines*
Acrolein Emission Factor	2.63E-03	lb/MMBtu	*AP-42 - Table 3.2-3 - 4-stroke rich-burn engines*
Benzene Emission Factor	1.58E-03	lb/MMBtu	*AP-42 - Table 3.2-3 - 4-stroke rich-burn engines*
Methanol Emission Factor	3.06E-03	lb/MMBtu	*AP-42 - Table 3.2-3 - 4-stroke rich-burn engines*
Methane (CH_4) Emission Factor	1.00E-03	kg CO_2/MMBtu	*40 CFR Part 98, Subpart C, Table C-2*
Carbon Dioxide (CO_2) Emission Factor	53.06	kg CO_2/MMBtu	*40 CFR Part 98, Subpart C, Table C-1*
Nitrous Oxide (N_2O) Emission Factor	1.00E-04	kg CO_2/MMBtu	*40 CFR Part 98, Subpart C, Table C-2*
Engine Rating	449	hp	
% runtime in field	100%		
Produced Gas Heating Value (HHV)	1153	Btu/scf	
Fuel Consumption Rate (Btu/hp-hr)	7146.481069	Btu/hp-hr	
Conversion Factor	2204.62	lb/metric ton	
Conversion Factor	1.10231	metric ton/std. ton	
Conversion Factor	0.90718	std. ton/metric ton	
Conversion Factor	24	hr/day	
Conversion Factor	1000000	Btu/MMBtu	
Conversion Factor	8760	hr/yr	
Conversion Factor	2000	lb/std. ton	
Conversion Factor	454	g/lb	

Calculations

	Emissions (Uncontrolled)	
Pollutant	lb/hr	tons/year
NOx	0.99	4.33
CO	1.98	8.66
VOC	1.15E+00	5.03E+00
PM	3.18E-02	1.39E-01
PM_{10}	3.05E-02	1.34E-01
$PM_{2.5}$	3.05E-02	1.34E-01
SO_2	0.00E+00	0.00E+00
HAPs	9.81E-02	4.30E-01
Formaldehyde	6.58E-02	2.88E-01
Acetaldehyde	8.95E-03	3.92E-02
Acrolein	8.44E-03	3.70E-02
Benzene	5.07E-03	2.22E-02
Methanol	9.82E-03	4.30E-02
	lb/hr	metric tons/year
CH_4	0.01	0.03
CO_2	375.35	1491.45
N_2O	0.00	0.00

Equations

Pollutant Emission Rate = Emission Factor x Engine Rating x Conversion Factor

PM/PM10/PM2.5 Emission Rate = Emission Factor x Fuel Usage x Fuel Heating Value x Conversion Factors

Crescent Point Energy U.S. Corp
Ute Tribal 13-16-3-1E-H1 & 4-21-3-1E-H1 Production Facility - Engine 2 (E-2)

Pumpjack Engine Detail Sheet - Controlled

Engine Build Year:	Post 1/1/2011	**Rebuild Year:**	Not applicable
Engine Make & Model:	Doosan D14.6L	**Engine Type:**	4-Stroke Rich Burn
Total Horsepower:	449	**Heat Rating:**	3.209 MMBtu/hr

Given

Fuel Usage	66.77	MCFD	
Fuel Usage	24.37	MMCF/YR	
NOx Emission Factor	1.00	g/hp-hr	*40 CFR Part 60, Subpart JJJJ*
CO Emission Factor	2.00	g/hp-hr	*40 CFR Part 60, Subpart JJJJ*
Total PM Emission Factor	9.91E-03	lb/MMBtu	*AP-42 - Table 3.2-3 - 4-stroke rich-burn engines*
Total $PM_{10}/PM_{2.5}$ Emission Factor	9.50E-03	lb/MMBtu	*AP-42 - Table 3.2-3 - 4-stroke rich-burn engines*
VOC Emission Factor	7.00E-01	g/hp-hr	*40 CFR Part 60, Subpart JJJJ*
Sulfur Emission Factor	0	lb/MMBtu	*No hydrogen sulfide indicated in gas analysis.*
Formaldehyde Emission Factor	1.03E-02	lb/MMBtu	*Catalyst Spec & AP-42 - Table 3.2-3 - 4-stroke rich-burn engines*
Acetaldehyde Emission Factor	1.40E-03	lb/MMBtu	*Catalyst Spec & AP-42 - Table 3.2-3 - 4-stroke rich-burn engines*
Acrolein Emission Factor	1.32E-03	lb/MMBtu	*Catalyst Spec & AP-42 - Table 3.2-3 - 4-stroke rich-burn engines*
Benzene Emission Factor	7.90E-04	lb/MMBtu	*Catalyst Spec & AP-42 - Table 3.2-3 - 4-stroke rich-burn engines*
Methanol Emission Factor	1.53E-03	lb/MMBtu	*Catalyst Spec & AP-42 - Table 3.2-3 - 4-stroke rich-burn engines*
Methane (CH_4) Emission Factor	1.00E-03	kg CO_2/MMBtu	*40 CFR Part 98, Subpart C, Table C-2*
Carbon Dioxide (CO_2) Emission Factor	53.06	kg CO_2/MMBtu	*40 CFR Part 98, Subpart C, Table C-1*
Nitrous Oxide (N_2O) Emission Factor	1.00E-04	kg CO_2/MMBtu	*40 CFR Part 98, Subpart C, Table C-2*
Engine Rating	449	hp	
% runtime in field	100%		
Produced Gas Heating Value (HHV)	1153	Btu/scf	
Fuel Consumption Rate (Btu/hp-hr)	7146.481069	Btu/hp-hr	
Conversion Factor	2204.62	lb/metric ton	
Conversion Factor	1.10231	metric ton/std. ton	
Conversion Factor	0.90718	std. ton/metric ton	
Conversion Factor	24	hr/day	
Conversion Factor	1000000	Btu/MMBtu	
Conversion Factor	8760	hr/yr	
Conversion Factor	2000	lb/std. ton	
Conversion Factor	454	g/lb	

Calculations

	Emissions (Controlled)	
Pollutant	lb/hr	tons/year
NOx	0.99	4.33
CO	1.98	8.66
VOC	6.92E-01	3.03E+00
PM	3.18E-02	1.39E-01
PM_{10}	3.05E-02	1.34E-01
$PM_{2.5}$	3.05E-02	1.34E-01
SO_2	0.00E+00	0.00E+00
HAPs	4.90E-02	2.15E-01
Formaldehyde	3.29E-02	1.44E-01
Acetaldehyde	4.48E-03	1.96E-02
Acrolein	4.22E-03	1.85E-02
Benzene	2.53E-03	1.11E-02
Methanol	4.91E-03	2.15E-02
	lb/hr	metric tons/year
CH_4	0.01	0.03
CO_2	375.35	1491.45
N_2O	0.00	0.00

Equations

Pollutant Emission Rate = Emission Factor x Engine Rating x Conversion Factor

PM/PM10/PM2.5 Emission Rate = Emission Factor x Fuel Usage x Fuel Heating Value x Conversion Factors

Crescent Point Energy U.S. Corp
Ute Tribal 13-16-3-1E-H1 & 4-21-3-1E-H1 Production Facility
Fugitive VOC Detail Sheet

Source ID Number	FUG	Source Location Zone	12
Source Description	Piping Fugitives Equipment Piping	Potential operation	8,760 hr/yr

Potential Emissions

Equipment Type	TOC Emission Factor (lb/hr/source)	Source Count	Hours of Operation	Control Factor (Percent)	Total HC Emission Rate (lb/hr)	Total HC Emission Rate (tpy)	Percent VOC	Total VOC Emission Rate (lb/hr)	Total VOC Emission Rate (tpy)
Valves-Gas/Vapor	0.009920	34	8,760	0.00%	0.34	1.48	10.64%	0.04	0.16
Valves-Light Oil	0.005510	47	8,760	0.00%	0.26	1.13	100.00%	0.26	1.13
Valves-Heavy Oil	0.000019	0	8,760	0.00%	0.00	0.00		0.00	0.00
Valves-Water	0.000216	47	8,760	0.00%	0.01	0.04	50.00%	0.01	0.02
Relief Valves	0.019400	0	8,760	0.00%	0.00	0.00	10.64%	0.00	0.00
Pump Seals-Gas/Vapor	0.019400	14	8,760	0.00%	0.27	1.19	10.64%	0.03	0.13
Pump Seals-Light Oil	0.028700	0	8,760	0.00%	0.00	0.00	100.00%	0.00	0.00
Pump Seals-Heavy Oil	0.000071	0	8,760	0.00%	0.00	0.00		0.00	0.00
Sample Connections	0.019400	0	8,760	0.00%	0.00	0.00	100.00%	0.00	0.00
Open-Ended Lines	0.004410	0	8,760	0.00%	0.00	0.00		0.00	0.00
Other - Hatch, Gas/Vapor	0.019467	7	8,760	0.00%	0.14	0.60	10.64%	0.01	0.06
Other - Hatch, Light Oil	0.016535	7	8,760	0.00%	0.12	0.51	100.00%	0.12	0.51
Other - Hatch, Heavy Oil	0.000071	0	8,760	0.00%	0.00	0.00		0.00	0.00
Other - Hatch, Water	0.030865	7	8,760	0.00%	0.22	0.95	50.00%	0.11	0.47
Connectors - Gas/Vapors	0.000440	47	8,760	0.00%	0.02	0.09	10.64%	0.00	0.01
Connectors - Light Oil	0.000463	74	8,760	0.00%	0.03	0.15	100.00%	0.03	0.15
Connectors - Heavy Oil	0.000017	0	8,760	0.00%	0.00	0.00		0.00	0.00
Connectors - Water	0.000243	74	8,760	0.00%	0.02	0.08	50.00%	0.01	0.04
Flanges-Gas/Vapor	0.000860	54	8,760	0.00%	0.05	0.20	10.64%	0.00	0.02
Flanges-Heavy Oil	0.000001	0	8,760	0.00%	0.00	0.00		0.00	0.00
Flanges-Light Oil	0.000243	80	8,760	0.00%	0.02	0.09	100.00%	0.02	0.09
Flanges-Water	0.000006	80	8,760	0.00%	0.00	0.00	50.00%	0.00	0.00
Totals		**572**			**1.49**	**6.51**		**0.64**	**2.79**

Oil and gas production operations equipment leak emission factors (from OAQPS TTN BBS)
Source counts estimated from 40 CFR Part 98, Subpart W, Table W-1C and are not site-specific.

VOC and HAP fugitive emissions can be estimated using the following equation:

$$E_X = \frac{[(EF_{C1} \times \#_{C1}) + (EF_{C2} \times \#_{C2}) + ...(EF_{Cn} \times \#_{Cn})] \times 8760}{2000} \times WF_X$$

where:
EX = emissions for pollutant X (tpy);
EFC1, EFC2 …EFCn = emission factor for component C1, C2, …Cn (lb/hr/component);
#C1, #C2 …#Cn = number of C1, C2, …Cn components;
WFX = weight fraction of pollutant X (wt W/wt TOC);
1-year = 8760-hr; and
1-ton = 2000-lb.

Crescent Point Energy U.S. Corp
Ute Tribal 13-16-3-1E-H1 & 4-21-3-1E-H1 Production Facility
Fugitive HAP Detail Sheet

Source ID Number	FUG		
Source Description	Piping Fugitives	Potential operation	8,760 hr/yr

Potential Emissions

Equipment Type	Total Emission Rate (lb/hr)	Total Emission Rate (tpy)
All-Gas/Vapor	0.09	0.38
All-Light Liquids	0.43	1.88
All-Heavy Oil	0.00	0.00
All-Water	0.12	0.54
Total VOC Emissions	**0.64**	**2.79**
TOC Emissions	**1.49**	**6.51**

Potential Emissions

Equipment Type	Emission Factor Gas	Emission Factor Light Oil	Total Emission Rate (lb/hr)	Total Emission Rate (tpy)
	Weight Percent (%wt)			
Benzene	0.023%	0.1383%	0.001	0.00451
Toluene	0.026%	0.121%	0.001	0.00409
Ethylbenzene	0.003%	0.008%	0.000	0.00031
Xylene	0.013%	0.036%	0.000	0.00137
N-Hexane	0.400%	2.521%	0.019	0.08153
Methane (CH_4)	58.680%	12.420%	1.056	4.62561
Carbon dioxide (CO_2)	0.956%	0.665%	0.000	0.00000
Nitrous oxide (N_2O)	n/a	n/a	n/a	n/a
HAP Totals	**0.47%**	**2.82%**	**0.021**	**0.092**

Crescent Point Energy U.S. Corp
Ute Tribal 13-16-3-1E-H1 & 4-21-3-1E-H1 Production Facility

Narrative Description

Hydrocarbons from two heavy crude oil wells are collected at the Ute Tribal 13-16-3-1E-H1 & 4-21-3-1E-H1 Production Facility. The hydrocarbon extraction from the wells is assisted by an artificial lifts driven by generators and the hydrocarbons are routed to heater treaters. The heater treaters separate the hydrocarbon into three production streams: gas, oil, and water. The produced gas is routed to a gas sales line. Due to potential capacity limitations of the sales gas line up to 8.40 MMscf of produced gas may be flared per year. The crude oil is routed to six 1,000-bbl crude oil storage tanks and the produced water is routed to two 1,000-bbl produced water storage tanks. Each of the crude oil storage tanks and the produced water tanks are heated by tank heaters. The crude oil and produced water is transported offsite using haul trucks. Methanol and glycol storage occurs on site in small storage tanks. Fugitive emissions also occur from component leaks.

Produced gas from the field is collected and dried at a compressor station. Once the produced gas is dried at the compressor station, it is rerouted back into the field to power the pilot lights, engines, and heaters.

Associated Producing Wells:

1. Ute Tribal 13-16-3-1E-H1; and
2. Ute Tribal 4-21-3-1E-H1

Equipment list, including control devices, etc.

Description	Unique ID
Crude Oil Storage Tanks - TK1 - TK18	TK1 - TK18
Produced Water Tank(s)	PWTK1 - PWTK2
Heater/Treater(s)	HTTR(S)
Tank Heaters	TK HTR(S)
Oil Tank Truck Loading	OL
Combustor(s)	COMBUSTOR(S)
Flared Produced Gas Emissions	PG FLARE(S)
Fugitive Emissions	FUG
Methanol Tank - 55-gallon drum	MT
Glycol Tank - 55-gallon drum	GT
Engine 1 (E-1)	E-1
Engine 2 (E-2)	E-2

Type of fuel and amount used

Fuel Usage	
Pilot Light(s) Usage:	1.04 MMscf/year
Engine(s) Usage:	48.74 MMscf/year
Heater(s) Usage:	64.56 MMscf/year
Maximum Flare Usage:	8.40 MMscf/year

Type Raw Materials Used

Flash gas from all storage tanks routed to the flare.
Oil and produced water moved offsite via trucks.
Natural gas used in heaters, flared pilot light(s), and engines(s).
Remaining natural gas sold or flared.

Production Rate

547,500 barrels per year of oil

Operating Schedule

24 hours per day, 7 days per week, 52 weeks per year

ATTACHMENT C

TANKS 4.0.9D EMISSION CALCULATION RESULTS

TANKS 4.0.9d
Emissions Report - Detail Format
Tank Indentification and Physical Characteristics

Identification

User Identification:	Ute Tribal 13-16-3-1E-H1 & 4-21-3-1E-H1
City:	Vernal
State:	Utah
Company:	Crescent Point Energy U.S. Corp
Type of Tank:	Vertical Fixed Roof Tank
Description:	Six 1000-bbl heavy crude oil storage tanks. 22,995,000 gallons total annual throughput. 3,832,500 gallons throughput per tank.

Tank Dimensions

Shell Height (ft):		30.00
Diameter (ft):		15.50
Liquid Height (ft) :		29.76
Avg. Liquid Height (ft):		15.00
Volume (gallons):		42,000.00
Turnovers:		91.25
Net Throughput(gal/yr):		3,832,500.00
Is Tank Heated (y/n):	Y	

Paint Characteristics

Shell Color/Shade:	Gray/Light
Shell Condition	Good
Roof Color/Shade:	Gray/Light
Roof Condition:	Good

Roof Characteristics

Type:	Cone	
Height (ft)		0.10
Slope (ft/ft) (Cone Roof)		0.01

Breather Vent Settings

Vacuum Settings (psig):	0.00
Pressure Settings (psig)	0.00

Meterological Data used in Emissions Calculations: Salt Lake City, Utah (Avg Atmospheric Pressure = 12.64 psia)

TANKS 4.0.9d
Emissions Report - Detail Format
Liquid Contents of Storage Tank

Ute Tribal 13-16-3-1E-H1 & 4-21-3-1E-H1 - Vertical Fixed Roof Tank
Vernal, Utah

Mixture/Component	Month	Daily Liquid Surf. Temperature (deg F) Avg.	Min.	Max.	Liquid Bulk Temp (deg F)	Vapor Pressure (psia) Avg.	Min.	Max.	Vapor Mol. Weight.	Liquid Mass Fract.	Vapor Mass Fract.	Mol. Weight	Basis for Vapor Pressure Calculations
Heavy Crude Oil Category D	All	145.00	145.00	145.00	145.00	0.3760	0.3760	0.3760	45.4000			600.00	Option 4: RVP=.18

TANKS 4.0.9d
Emissions Report - Detail Format
Detail Calculations (AP-42)

Ute Tribal 13-16-3-1E-H1 & 4-21-3-1E-H1 - Vertical Fixed Roof Tank
Vernal, Utah

Annual Emission Calcaulations	
Standing Losses (lb):	0.0000
Vapor Space Volume (cu ft):	2,836.6684
Vapor Density (lb/cu ft):	0.0026
Vapor Space Expansion Factor:	0.0000
Vented Vapor Saturation Factor:	0.7695
Tank Vapor Space Volume:	
Vapor Space Volume (cu ft):	2,836.6684
Tank Diameter (ft):	15.5000
Vapor Space Outage (ft):	15.0333
Tank Shell Height (ft):	30.0000
Average Liquid Height (ft):	15.0000
Roof Outage (ft):	0.0333
Roof Outage (Cone Roof)	
Roof Outage (ft):	0.0333
Roof Height (ft):	0.1000
Roof Slope (ft/ft):	0.0100
Shell Radius (ft):	7.7500
Vapor Density	
Vapor Density (lb/cu ft):	0.0026
Vapor Molecular Weight (lb/lb-mole):	45.4000
Vapor Pressure at Daily Average Liquid Surface Temperature (psia):	0.3760
Daily Avg. Liquid Surface Temp. (deg. R):	604.6700
Daily Average Ambient Temp. (deg. F):	51.9625
Ideal Gas Constant R (psia cuft / (lb-mol-deg R)):	10.731
Liquid Bulk Temperature (deg. R):	604.6700
Tank Paint Solar Absorptance (Shell):	0.5400
Tank Paint Solar Absorptance (Roof):	0.5400
Daily Total Solar Insulation Factor (Btu/sqft day):	1,452.1184
Vapor Space Expansion Factor	
Vapor Space Expansion Factor:	0.0000
Daily Vapor Temperature Range (deg. R):	0.0000
Daily Vapor Pressure Range (psia):	0.0000
Breather Vent Press. Setting Range(psia):	0.0000
Vapor Pressure at Daily Average Liquid Surface Temperature (psia):	0.3760
Vapor Pressure at Daily Minimum Liquid Surface Temperature (psia):	0.3760
Vapor Pressure at Daily Maximum Liquid Surface Temperature (psia):	0.3760
Daily Avg. Liquid Surface Temp. (deg R):	604.6700
Daily Min. Liquid Surface Temp. (deg R):	604.6700
Daily Max. Liquid Surface Temp. (deg R):	604.6700
Daily Ambient Temp. Range (deg. R):	23.3583
Vented Vapor Saturation Factor	
Vented Vapor Saturation Factor:	0.7695
Vapor Pressure at Daily Average Liquid: Surface Temperature (psia):	0.3760
Vapor Space Outage (ft):	15.0333

Working Losses (lb):	578.8119
Vapor Molecular Weight (lb/lb-mole):	45.4000
Vapor Pressure at Daily Average Liquid Surface Temperature (psia):	0.3760
Annual Net Throughput (gal/yr.):	3,832,500.0000
Annual Turnovers:	91.2500
Turnover Factor:	0.4954
Maximum Liquid Volume (gal):	42,000.0000
Maximum Liquid Height (ft):	29.7552
Tank Diameter (ft):	15.5000
Working Loss Product Factor:	0.7500
Total Losses (lb):	578.8119

TANKS 4.0.9d
Emissions Report - Detail Format
Individual Tank Emission Totals

Emissions Report for: Annual

Ute Tribal 13-16-3-1E-H1 & 4-21-3-1E-H1 - Vertical Fixed Roof Tank
Vernal, Utah

	Losses(lbs)		
Components	Working Loss	Breathing Loss	Total Emissions
Heavy Crude Oil Category D	578.81	0.00	578.81

TANKS 4.0.9d
Emissions Report - Detail Format
Tank Indentification and Physical Characteristics

Identification

User Identification:	Crescent Point - Glycol tank
City:	Vernal
State:	Utah
Company:	Crescent Point
Type of Tank:	Horizontal Tank
Description:	55-gal drum Used smallest dimensions possible.

Tank Dimensions

Shell Length (ft):		5.00
Diameter (ft):		3.00
Volume (gallons):		265.00
Turnovers:		1.00
Net Throughput(gal/yr):		265.00
Is Tank Heated (y/n):	N	
Is Tank Underground (y/n):	N	

Paint Characteristics

Shell Color/Shade:	Gray/Light
Shell Condition	Good

Breather Vent Settings

Vacuum Settings (psig):	-0.03
Pressure Settings (psig)	0.03

Meterological Data used in Emissions Calculations: Salt Lake City, Utah (Avg Atmospheric Pressure = 12.64 psia)

TANKS 4.0.9d
Emissions Report - Detail Format
Liquid Contents of Storage Tank

Crescent Point - Glycol tank - Horizontal Tank
Vernal, Utah

Mixture/Component	Month	Daily Liquid Surf. Temperature (deg F) Avg.	Min.	Max.	Liquid Bulk Temp (deg F)	Vapor Pressure (psia) Avg.	Min.	Max.	Vapor Mol. Weight.	Liquid Mass Fract.	Vapor Mass Fract.	Mol. Weight	Basis for Vapor Pressure Calculations
Propylene glycol	All	59.41	49.72	69.11	54.20	0.0009	0.0005	0.0015	76.1100			76.11	Option 2: A=8.2082, B=2085.9, C=203.54

TANKS 4.0.9d
Emissions Report - Detail Format
Detail Calculations (AP-42)

Crescent Point - Glycol tank - Horizontal Tank
Vernal, Utah

Annual Emission Calcaulations

Standing Losses (lb):	0.0072
Vapor Space Volume (cu ft):	22.5114
Vapor Density (lb/cu ft):	0.0000
Vapor Space Expansion Factor:	0.0700
Vented Vapor Saturation Factor:	0.9999
Tank Vapor Space Volume:	
Vapor Space Volume (cu ft):	22.5114
Tank Diameter (ft):	3.0000
Effective Diameter (ft):	4.3713
Vapor Space Outage (ft):	1.5000
Tank Shell Length (ft):	5.0000
Vapor Density	
Vapor Density (lb/cu ft):	0.0000
Vapor Molecular Weight (lb/lb-mole):	76.1100
Vapor Pressure at Daily Average Liquid Surface Temperature (psia):	0.0009
Daily Avg. Liquid Surface Temp. (deg. R):	519.0816
Daily Average Ambient Temp. (deg. F):	51.9625
Ideal Gas Constant R (psia cuft / (lb-mol-deg R)):	10.731
Liquid Bulk Temperature (deg. R):	513.6725
Tank Paint Solar Absorptance (Shell):	0.5400
Daily Total Solar Insulation Factor (Btu/sqft day):	1,452.1184
Vapor Space Expansion Factor	
Vapor Space Expansion Factor:	0.0700
Daily Vapor Temperature Range (deg. R):	38.7740
Daily Vapor Pressure Range (psia):	0.0010
Breather Vent Press. Setting Range(psia):	0.0600
Vapor Pressure at Daily Average Liquid Surface Temperature (psia):	0.0009
Vapor Pressure at Daily Minimum Liquid Surface Temperature (psia):	0.0005
Vapor Pressure at Daily Maximum Liquid Surface Temperature (psia):	0.0015
Daily Avg. Liquid Surface Temp. (deg R):	519.0816
Daily Min. Liquid Surface Temp. (deg R):	509.3881
Daily Max. Liquid Surface Temp. (deg R):	528.7751
Daily Ambient Temp. Range (deg. R):	23.3583
Vented Vapor Saturation Factor	
Vented Vapor Saturation Factor:	0.9999
Vapor Pressure at Daily Average Liquid: Surface Temperature (psia):	0.0009
Vapor Space Outage (ft):	1.5000
Working Losses (lb):	0.0004
Vapor Molecular Weight (lb/lb-mole):	76.1100
Vapor Pressure at Daily Average Liquid Surface Temperature (psia):	0.0009
Annual Net Throughput (gal/yr.):	265.0000

Annual Turnovers:	1.0000
Turnover Factor:	1.0000
Tank Diameter (ft):	3.0000
Working Loss Product Factor:	1.0000

Total Losses (lb):	0.0076

TANKS 4.0.9d
Emissions Report - Detail Format
Individual Tank Emission Totals

Emissions Report for: Annual

Crescent Point - Glycol tank - Horizontal Tank
Vernal, Utah

	Losses(lbs)		
Components	Working Loss	Breathing Loss	Total Emissions
Propylene glycol	0.00	0.01	0.01

TANKS 4.0.9d
Emissions Report - Detail Format
Tank Indentification and Physical Characteristics

Identification

User Identification:	Crescent Point - Methanol tank
City:	Vernal
State:	Utah
Company:	Crescent Point
Type of Tank:	Horizontal Tank
Description:	55-gallon drum size methanol Used smallest dimensions possible. Horizontal tank

Tank Dimensions

Shell Length (ft):		5.00
Diameter (ft):		3.00
Volume (gallons):		265.00
Turnovers:		1.00
Net Throughput(gal/yr):		265.00
Is Tank Heated (y/n):	N	
Is Tank Underground (y/n):	N	

Paint Characteristics

Shell Color/Shade:	Gray/Light
Shell Condition	Good

Breather Vent Settings

Vacuum Settings (psig):	-0.03
Pressure Settings (psig)	0.03

Meterological Data used in Emissions Calculations: Salt Lake City, Utah (Avg Atmospheric Pressure = 12.64 psia)

TANKS 4.0.9d
Emissions Report - Detail Format
Liquid Contents of Storage Tank

Crescent Point - Methanol tank - Horizontal Tank
Vernal, Utah

Mixture/Component	Month	Daily Liquid Surf. Temperature (deg F) Avg.	Min.	Max.	Liquid Bulk Temp (deg F)	Vapor Pressure (psia) Avg.	Min.	Max.	Vapor Mol. Weight.	Liquid Mass Fract.	Vapor Mass Fract.	Mol. Weight	Basis for Vapor Pressure Calculations
Methyl alcohol	All	59.41	49.72	69.11	54.20	1.4156	1.0351	1.9099	32.0400			32.04	Option 2: A=7.897, B=1474.08, C=229.13

TANKS 4.0.9d
Emissions Report - Detail Format
Detail Calculations (AP-42)

Crescent Point - Methanol tank - Horizontal Tank
Vernal, Utah

Annual Emission Calcaulations

Standing Losses (lb):	8.6559
Vapor Space Volume (cu ft):	22.5114
Vapor Density (lb/cu ft):	0.0081
Vapor Space Expansion Factor:	0.1473
Vented Vapor Saturation Factor:	0.8988
Tank Vapor Space Volume:	
Vapor Space Volume (cu ft):	22.5114
Tank Diameter (ft):	3.0000
Effective Diameter (ft):	4.3713
Vapor Space Outage (ft):	1.5000
Tank Shell Length (ft):	5.0000
Vapor Density	
Vapor Density (lb/cu ft):	0.0081
Vapor Molecular Weight (lb/lb-mole):	32.0400
Vapor Pressure at Daily Average Liquid Surface Temperature (psia):	1.4156
Daily Avg. Liquid Surface Temp. (deg. R):	519.0816
Daily Average Ambient Temp. (deg. F):	51.9625
Ideal Gas Constant R (psia cuft / (lb-mol-deg R)):	10.731
Liquid Bulk Temperature (deg. R):	513.6725
Tank Paint Solar Absorptance (Shell):	0.5400
Daily Total Solar Insulation Factor (Btu/sqft day):	1,452.1184
Vapor Space Expansion Factor	
Vapor Space Expansion Factor:	0.1473
Daily Vapor Temperature Range (deg. R):	38.7740
Daily Vapor Pressure Range (psia):	0.8748
Breather Vent Press. Setting Range(psia):	0.0600
Vapor Pressure at Daily Average Liquid Surface Temperature (psia):	1.4156
Vapor Pressure at Daily Minimum Liquid Surface Temperature (psia):	1.0351
Vapor Pressure at Daily Maximum Liquid Surface Temperature (psia):	1.9099
Daily Avg. Liquid Surface Temp. (deg R):	519.0816
Daily Min. Liquid Surface Temp. (deg R):	509.3881
Daily Max. Liquid Surface Temp. (deg R):	528.7751
Daily Ambient Temp. Range (deg. R):	23.3583
Vented Vapor Saturation Factor	
Vented Vapor Saturation Factor:	0.8988
Vapor Pressure at Daily Average Liquid: Surface Temperature (psia):	1.4156
Vapor Space Outage (ft):	1.5000
Working Losses (lb):	0.2862
Vapor Molecular Weight (lb/lb-mole):	32.0400
Vapor Pressure at Daily Average Liquid Surface Temperature (psia):	1.4156
Annual Net Throughput (gal/yr.):	265.0000

Annual Turnovers:	1.0000
Turnover Factor:	1.0000
Tank Diameter (ft):	3.0000
Working Loss Product Factor:	1.0000

Total Losses (lb):	9.1421

TANKS 4.0.9d
Emissions Report - Detail Format
Individual Tank Emission Totals

Emissions Report for: Annual

Crescent Point - Methanol tank - Horizontal Tank
Vernal, Utah

	Losses(lbs)		
Components	Working Loss	Breathing Loss	Total Emissions
Methyl alcohol	0.29	8.86	9.14

ATTACHMENT D

EQUIPMENT SPECIFICATIONS

14.6L NG ENGINE

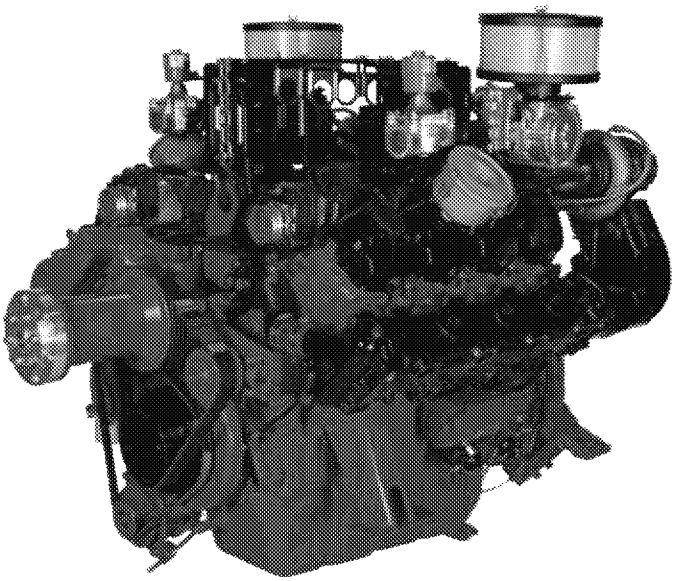

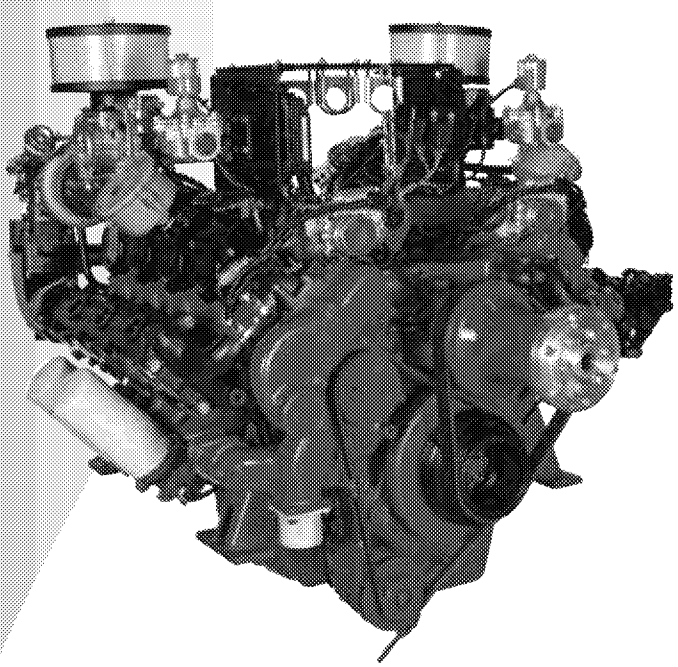

FEATURES / OPTIONS

- US –EPA Certified and CARB Compliant
- Power: 300kWm Standby on NG
- Integrated Engine Controls Protection with CANBUS
- 50c Ambient Cooling Capacity
- UL2200 Compliant or Listed Components
- MasterTrak Telematics service (included for 1 year)

DESCRIPTION

The NGE 14.6L is a US-EPA CERTIFIED Natural Gas and Propane engine. Built upon a proven marine-diesel grade block, the 8-Cylinder V, turbocharged and after-cooled engine features replaceable wet liners and watercooled exhaust. The engine was developed from the block-up to be a reliable and durable power unit.

Superior engine performance is provided by an ECU that integrates and coordinates all critical functions including: Governor, Variable Ingition Timing, Air:Fuel Ratio Control, Knock Suppression and Engine Protection.

NGEngines is an extension of the Power Solutions, Inc. (PSI) product line which is based upon GM blocks from 650cc to 8.1L.The NGE product lineup has 5 models with displacements of 8.1L, 11.1L, 14.6L, 18.3L and 21.9L. All PSI/NGE engines feature the same fuel systems and controls simplifying your application development and support.

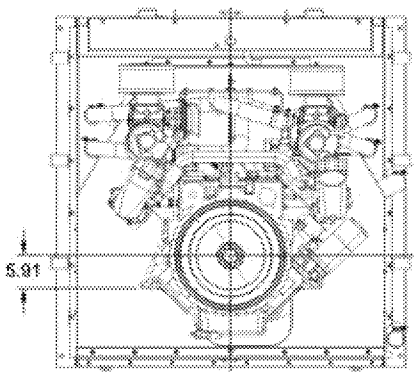

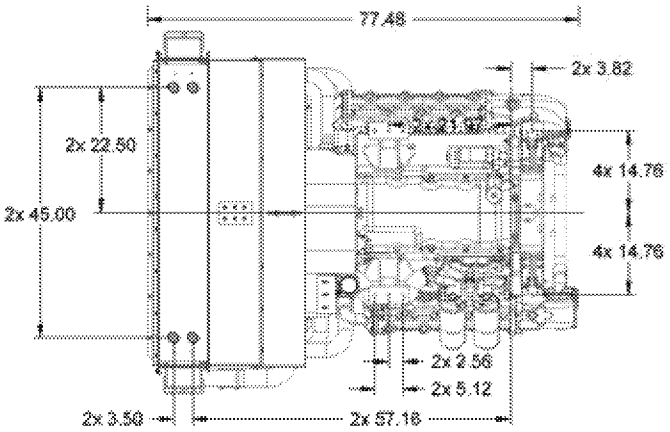

NG ENGINE

14.6L

	UNITS		14.6L CAC			
	STD	METRIC	1500		1800	
GENERAL ENGINE MOUNTING						
Type	N/A		V-type 4 cycle			
Number of cylinders	N/A		8			
Aspiration	N/A		Turbo Charge Air Cooled			
Bore	in	mm	5.04	128	5.04	128
Stroke	in	mm	5.59	142	5.59	142
Displacement	in^3	L	892	14.62	892	14.62
Compression Ratio	N/A		10.5			
Mean Piston Speed	ft/min	m/s	1397.5	7.1	1677	8.52
Rated Load	Hp	kW	339	253	402	300
MEP (@ rated Load)	psi	kPa	201	14	198	14
Rotation Viewed from Flywheel	N/A		Counter Clockwise			
Firing Order	N/A		1-5-7-2-6-3-4-8-1			
DRY WEIGHT						
Fan to Flywheel	lb	kg	3150	1429	3150	1429
Rad to Flywheel	lb	kg	4450	2018	4450	2018
WET WEIGHT						
Fan to Flywheel	lb	kg	3291	1475	3291	1475
Rad to Flywheel	lb	kg	4955	2262	4955	2262
CG						
Distance from FW housing	in	mm	6.26	159	6.26	159
Distance above center of crankshaft	in	mm	17.66	448.5	17.66	448.5
ENGINE MOUNTING						
Maximum Allowable Bending Moment at Rear of Block	lb ft	N m	0	0	0	0
Moment of Inertia About Roll Axis	lb ft^2	kg m^2	0	0	0	0
Flywheel housing	N/A		SAE No. 1			
Flywheel	N/A		No. 14			
EXHAUST SYSTEM						
Type						
Maximum allowable Back pressure	in HG	kPa	3	10.2	3	10.2
Standard Catalyst Back pressure	in HG	kPa	1.5	5.1	1.5	5.1
Exhaust Outlet Pipe Size						
Maximum Turbine Inlet Temperature	F	C	1382	750	1382	750
Exhuast Flow at Rated Power	lb/hr	kg/hr	2099	952	2492	1131
Exhuast Flow at Rated Power @1350F	cfm	m^3/min	1596	45.2	1895	53.6
AIR INDUCTION SYSTEM						
Maximum allowable Intake Air Restriction with Air Cleaner						
Clean	inH2O	kPa	5	1.24	5	1.24
Dirty	inH2O	kPa	15	3.74	15	3.74
Combustion Air required	lb/hr	kg/hr	1975	896	2346	1064
Combustion Air required	cfm	m^3/min	448	13.1	532	15.6
ELECTRICAL SYSTEM						
Minimum Recommended Battery Capacity	AH		200			
Cold Cranking Current						
Engine only	CCA		1000			
Engine with Drive train	CCA		1000			
Maximum Allowable Resistance of Starting Circuit	Ohms		0.002			
Staring Motor Power	HP	kW	9.4	7	9.4	7
Battery Charging Alternator						
Voltage	Volts		24			
Current	Amps		45			

	UNITS		14.6L CAC			
	STD	METRIC	1500		1800	
COOLING SYSTEM						
Coolant Capacity						
Engine only	gal	L	9.5	43.2	9.5	43.2
Engine with Radiator	gal	L	50	227	50	227
Engine Coolant Flow	gal/min	L/min	151	570	180	680
Water Pump Speed	RPM		0	0	0	0
Heat rejected to Cooling water at rated Load	btu/min	kcal/sec	13094	55	16189	68
Maximum Intake Air Temperature (IAT)	F	C	155	68	155	68
ECU IAT Warning	F	C	0	0	0	0
ECU IAT Shutdown	F	C	0	0	0	0
Maximum Coolant Friction Head External to the engine	psi	bar	5.8	0.4	5.8	0.4
Maximum Air Restriction Across a Radiator	inH2O	mmH2O	0.5	12.8	0.5	12.8
Standard Thermostat Range						
Cracking Temperature	F	C	160	71	160	71
Full Open Temperature	F	C	185	85	185	85
Maximum Output Pressure of Engine Water Pump						
Maximum Allowable Pressure Cap	psi	bar	14.7	1	14.7	1
Ambient Clearance Open Genset (water)						
Specified	F	C	122	50	122	50
Ambient Clearance (Oil)						
Specified	F	C	122	50	122	50
Maximum Allowable Top Tank Temperature	F	C	230	110	230	110
ECU Warning	F	C	220	104	220	104
ECU Shutdown	F	C	230	110	230	110
Fan Power	HP	kW	13	9.7	22	16.4
Fan Diameter, including blades	in	mm	45	1143	45	1143
Fan Speed	RPM		1200		1440	
Cooling Fan Air Flow @ 1" H2O Stat. Press and 125F @ Rad	CFM	m^3/min	25714	728.13	30000	849.5
Charge Air Cooler						
Compressor Outlet Temperature	F	C	0	0.0	0	0.0
Compressor Flow Rate	CFM	m^3/min	0	0.0	809	22.9
LUBRICATION SYSTEM						
Oil Specification	SAE 15W-40 Low Ash Gas engine oil (.25-.5% by wt), API CD/CF or higher					
Oil Pressure						
Idle						
Min	Psi	Bar	13	0.9	13	0.9
Max	Psi	Bar	43.5	3	43.5	3
Rated Speed						
Min	Psi	Bar	43.5	3	43.5	3
Max	Psi	Bar	94.5	6.5	94.5	6.5
Maximum Allowable Oil Temperature	F	C	230	110	230	110
Engine Oil Capacity						
Min	Qts	L	26.5	25	26.5	25
Max	Qts	L	32.75	31.0	32.75	31.0
Oil Filter Capacity	Qts	L	7.5	7.1	7.5	7.1
FUEL SYSTEM						
Low Pressure Dry Processed Natural Gas (Spec)						
Fuel Composition						
Maximum EPR Rated Pressure	psi	kPa	1	6.89	1	6.89
Maximum Running pressure to Electronic Pressure Regulator (EPR)	inH2O	kPa	11	2.74	11	2.74
Minimum Running pressure to EPR	inH2O	kPa	7	1.74	7	1.74
Minimum Gas Supply Pipe Size			2 x 1-1/4" NPT			
Low Pressure Vapor Propane (HD5)						
Fuel Composition						
Maximum EPR Rated Pressure	psi	kPa	1	6.89	1	6.89
Maximum Running Pressure to EPR	inH2O	kPa	11	2.74	11	2.74
Minimum Running Pressure to EPR	inH2O	kPa	7	1.74	7	1.74
Minimum LPG Supply Pipe Size			2 x 1-1/4" NPT			

The preceeding pipe sizes are only suggestions and piping sizes may vary with temperature, pressure, distance from supply and application of local codes. Gas must be available at adequate volume and pressure for engine at the EPR.

NGE 14.6L Fuel Consumption Data

NG 60 Hz				
Power at Flywheel	kg/hr	m3/hr	ft3/hr	BTU/hr
322.0	72.0	90.0	3,177	3,208,770
264.5	60.1	75.1	2,651	2,677,057
176.3	40.8	51.0	1,799	1,817,154
88.2	23.7	29.6	1,044	1,054,598
34.8	13.5	16.8	594	600,310

NG 50 Hz				
Power at Flywheel	kg/hr	m3/hr	ft3/hr	BTU/hr
273.0	59.0	73.8	2,603	2,629,409
204.4	44.9	56.1	1,981	2,000,492
136.3	32.0	40.0	1,414	1,427,764
68.1	17.6	22.0	778	786,081
27.0	10.1	12.7	447	451,044

Gas Properties		
	kg/m3	BTU/ ft3
LP Density	1.882	2316
NG Density	0.8	1010

LP 60 Hz				
Power at Flywheel	kg/hr	m3/hr	ft3/hr	BTU/hr
189.0	49.4	26.2	926	2,143,890
141.8	36.4	19.3	683	1,581,471
94.5	26.9	14.3	505	1,170,289
47.3	19.3	10.3	362	838,180
20.4	13.1	7.0	246	569,330

LP 50 Hz				
Power at Flywheel	kg/hr	m3/hr	ft3/hr	BTU/hr
171.0	41.6	22.1	780	1,805,801
127.8	32.0	17.0	601	1,391,694
84.5	22.2	11.8	417	964,697
43.7	15.7	8.3	294	680,033
18.3	6.6	3.5	123	284,665

Power Ratings at Flywheel			
	Continuous	Prime	Stand-By
	kW	kW	kW
NG 50 Hz		230	253
NG 60 Hz		270	300
LP 50 Hz			171
LP 60 Hz			189

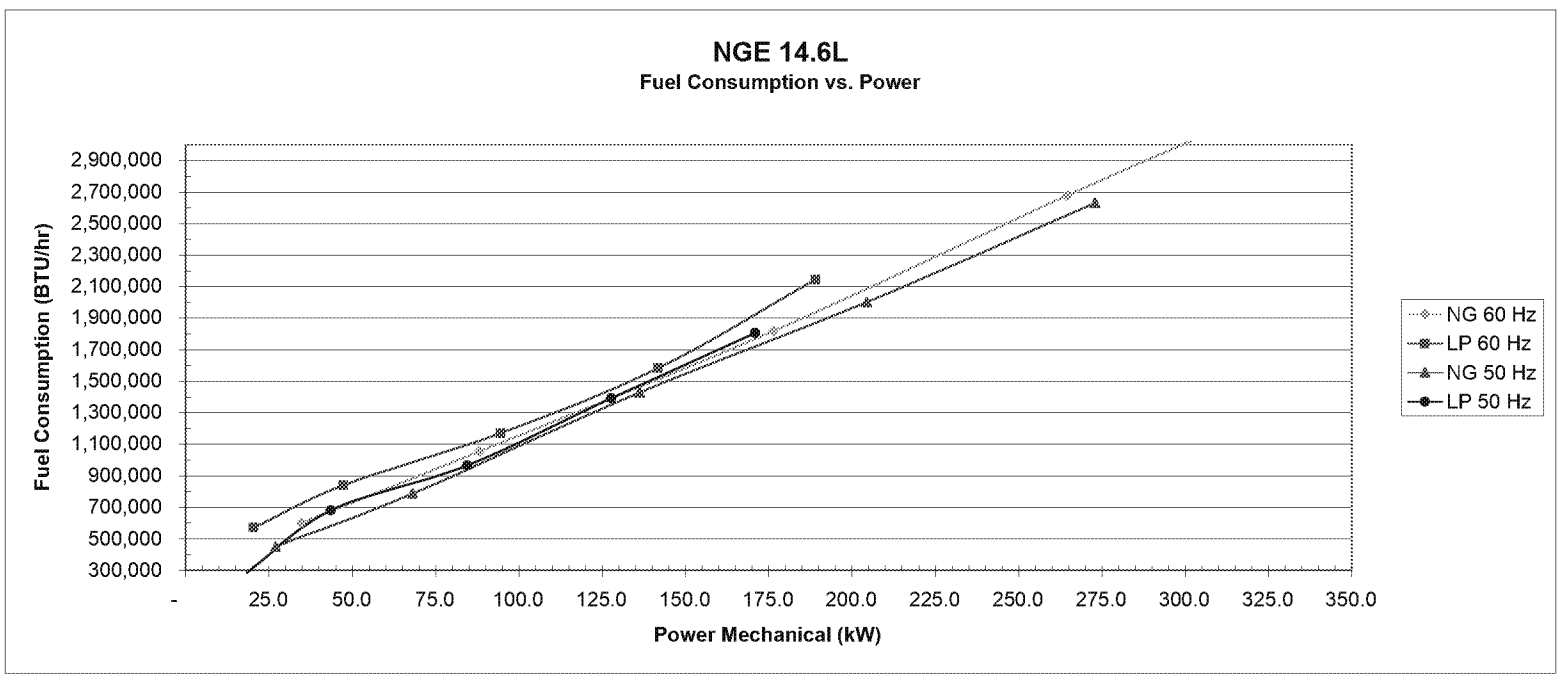

Leed Fabrication Services, Inc., Elevated Flare consists of the following:
Part#: EF4-25

One (1) - 4" X 25' tall chamber. Chamber mounted to a steel base plate.
One (1) - 1" x 23' piping for Igniter wire
One (1) - Flameco pilot burner.
One (1) - ½" x 25' pilot supply line.
One (1) - Burner Head to match capacity required
Eye's to hook up Guy Wires
One (1) - 3" inline flame arrestor installed on the inlet.
3" Balon Ball valve installed on the inlet
Wind Diverter
Concrete Pad to mount Elevated Flare to
Manual winch to lower and raise Flare

It is highly recommended that you utilize Guy Wires. The Elevated Flare is designed for easy pivot to ground level for any maintenance.

At 100#
Single Head capacity: .75 mmscfd
Dual Head capacity: 2.75 mmscfd

Price per FOB Leed:
Single Head Flare: $8,900 each
Dual Head Flare: $10,800 each

*****1% discount if invoice paid within 10 days of invoice date*****

Option
ProFire electronic igniters: $2,500 each

Extra Stainless Steel Single Burner Head: $3,200 each
Extra Stainless Steel Dual Burner Head: $4,800 each

Regards,
Malarie Perlinger
Customer Service Manager
Leed Fabrication Services, Inc.
308-530-0445

The confidential and/or proprietary information, and may be used only by the person or entity to which it is addressed.

LEED FABRICATION	Item/Tag No.:		Page	1 of 3	
	Project No.:		Revision:	B	
			Date:	27 February 2014	
	Project:		By:	JS	
Enviromental Control Equipment	P.O. No.:	-	Checked:	SG	
Data Sheet	RFQ No.:	-	Approved:	MS	

Client:		Ref. P&ID:	-		
Site:				Supplier:	LEED FABRICATION
Unit/Lease:		Remarks:	-	Model No.:	L30-0007/8-00

GENERAL

1	Design Code:		NDE:	LEED Fabrication Standards
2	Service:		Customer Specs:	☐ Yes
3	Description:	Standard Single/Dual Head Flare		☑ No

PROCESS DATA

	Gas Composition:	mol %	Process Conditions: Variable	Value	Units
4	Methane		Flow Rate	Up to 2.75	mmscfd
5	Ethane		Pressure		psig
6	Propane		Temperature		°F
7	I-Butane		Molecular Weight		
8	n-Butane		Process/Waste Stream	☑ Gas	☐ Liquid
9	I-Pentane		Detailed Process Description / Process Notes:		
10	n-Pentane		1. Turndown 10:1. Based on an expected normal operating rate indicated above		
11	n-Hexane		2. Gas mixture heating value estimated to be 1500 BTU/SCF unless specified by customer		
12	CO2		3. Actual gas composition varies by site		
13	N2		4. EPA NSPS 40 CFR Part 60 compliant		
14	Helium		5. 98% DRE		
15	H_2O				
16	C7				
17	C8				
18	C9				
19	C10				
20	C11+				
21	TOTAL				

	Other Components:	PPMV	Available Utilities:	
22	H2S		Fuel / Pilot Gas	Natural Gas: 50 SCFH / Propane 40 SCFH @ 5-7 psig
23	Benzene		Instrument Air	NA
24	Toluene		Power	120 V / 60 Hz or Solar Power
25	E-Benzene		Steam	NA
26	Xylene		Purge Gas	NA

DESIGN DATA

27	Ambient Temperatures:		Noise Performance Requirements:	
28	Low, °F	-20	Structural Design Code:	
29	High, °F	120	Wind Design Code:	ASCE
30	Design Conditions: Pressure/Temperature			
31	Max. Relative Humidity, %	90	Pressure/Speed	100 mph
32	Elevation (ASL), ft		Category	
33	Area Classification:	Class I Div 2	Seismic Design Code:	
34	Electrical Design Code:	NEC	Location	

EQUIPMENT SPECIFICATION

35	Type:	☑ Elevated	☐ Enclosed	Equipment Design:	
36		☐ Above Ground		Component	Material / Size / Rating / Other
37		☑ Stack	☐ Multiple Stack	Burner	
38		☐ Portable / Trailer		Burner Tip / Assist Gas Burner	304/316 SS
39				Burner Body	Carbon Steel
40	Smokeless By:	☐ Steam	☐ Assist Air	Pilot	
41		☐ Gas Assist	☐ Staging	Pilot Tip	304/316 SS
42				Pilot Line(s)	Carbon Steel
43	Stack:	☑ Self Supporting		Firebox / Stack	
44	Flare Burner:	☐ Non-Smokeless	☑ Smokeless ☐ Gas Assist	Shell	NA
45	Pilot:	☑ Intermittent	☑ Continuous	Piping	Carbon Steel
46	Pilot Air Inspirator:	☑ Local	☐ Remote	Nozzles	Carbon Steel
47	Pilot Flame Control:	☐ No	☑ Yes (Thermocouple)	Flanges	Carbon Steel
48				Insulation	NA
49	Pilot Ignition:	☐ Flamefront Generator	☑ Inspirating Ignitor	Insulation Pins	NA
50		☐ Electronic	☑ Automatic ☐ Manual	Refractory	NA
51		☐ With Pilot Flame Control		Refractory Anchors	NA
52		☐ With Auto Pilot Re-Ignition		Ladders and Platforms	NA
53				Stack Sample Connections	NA
54	Pilot Ignition Backup:	☐ Manual	Specify: i.e Piezo-Electric	Sight Glass	NA
55		☐ Battery Pack		Other	

LEED FABRICATION	Item/Tag No.:		Page	2 of 3	
	Project No.:		Revision:	B	
			Date:	27 February 2014	
	Project:		By:	JS	
Environmental Control Equipment Data Sheet	P.O. No.:	-	Checked:	SG	
	RFQ No.:	-	Approved:	MS	

Client:		Ref. P&ID:	-	
Site:			Supplier:	LEED FABRICATION
Unit/Lease:		Remarks:	-	Model No.: L30-0007/8-00

EQUIPMENT SPECIFICATION

56	**Flame Detection:**	☐ Thermocouple ☑ Ionization Rod	**Auxiliary Equipment**	
57		☐ UV Scanner	Valves	NA
58	**General Configuration:**		Blowers	NA
59			Dampers	NA
60			Inlet KO / Liquid Seal	NA
61			Flame / Detonation Arrestor	Yes
62			**Instrumentation & Controls**	
63			Solenoids / Shut-Off Valves	Check with Sales for available config.
64			Flow Meters	NA
65			Calorimeter	NA
66			Pressure Switches/Transmitters	NA
67			Thermocouples	Check with Sales for available config.
68			Temperature Switches/Transmitters	NA
69			BMS	Check with Sales for available config.
70			CEMS	NA
71			Other	NA
72				
73				
74				
75				

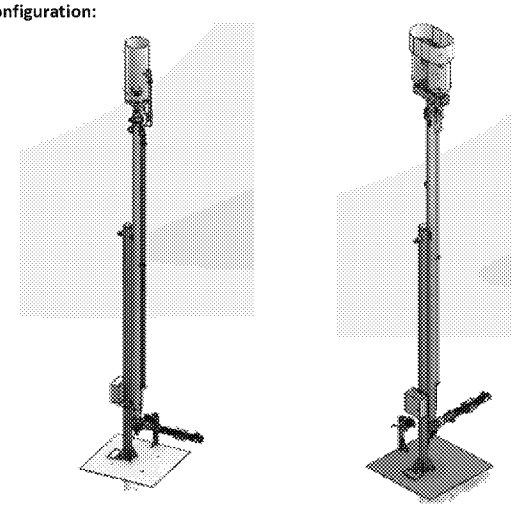

FABRICATION AND INSPECTION

76	**Special requirements**	☐ Skid Mounted ☑ Concrete Pad	**Equipment Info**	
77		☐ Other	**Component**	**Weight / Dimensions**
78			**Burner**	
79	**Inspection**	☑ Vendor Standard	Burner Assembly	
80		☐ Other. Specify:	**Stack**	
81	**Material Certification**	☑ Vendor Standard	Stack Assembly	4 " OD x 25 ' H
82		☐ MTR	Pilot Tip	
83		☐ Certificate of Compliance	Pilot Line(s)	
84		☐ Other (Specify):	Stack Assembly	
85	**NDE**	☑ Vendor Standard	**Auxiliary Equipment**	
86		☐ Radiography. Specify:	Blowers	
87		☐ Ultrasonic. Specify:	Inlet KO / Liquid Seal	
88		☐ Liquid Penetrant.	Flame / Detonation Arrestor	
89		☐ Magnetic Particles.	Skid	
90		☐ PMI. Specify:	**Instrumentation & Controls**	
91		☐ Other. Specify:	BMS	
92	**Surface Preparation**	☑ Vendor Standard	Control Panel	
93		☐ Other. Specify:		
94	**Paint System**	☑ Vendor Standard		
95		☐ Other. Specify:		
96	**Finished Color**	☑ Vendor Standard		
97		☐ Other. Specify:		
98				
99				

Additional Notes:

LEED FABRICATION	Item/Tag No.:		Page	3	of	3
	Project No.:		Revision:	B		
			Date:	27 February 2014		
	Project:		By:	JS		
Environmental Control Equipment Data Sheet	P.O. No.:	-	Checked:	SG		
	RFQ No.:	-	Approved:	MS		

Client:		Ref. P&ID:	-		
Site:				Supplier:	LEED FABRICATION
Unit/Lease:		Remarks:	-	Model No.:	L30-0007/8-00

GENERAL ARRANGEMENT

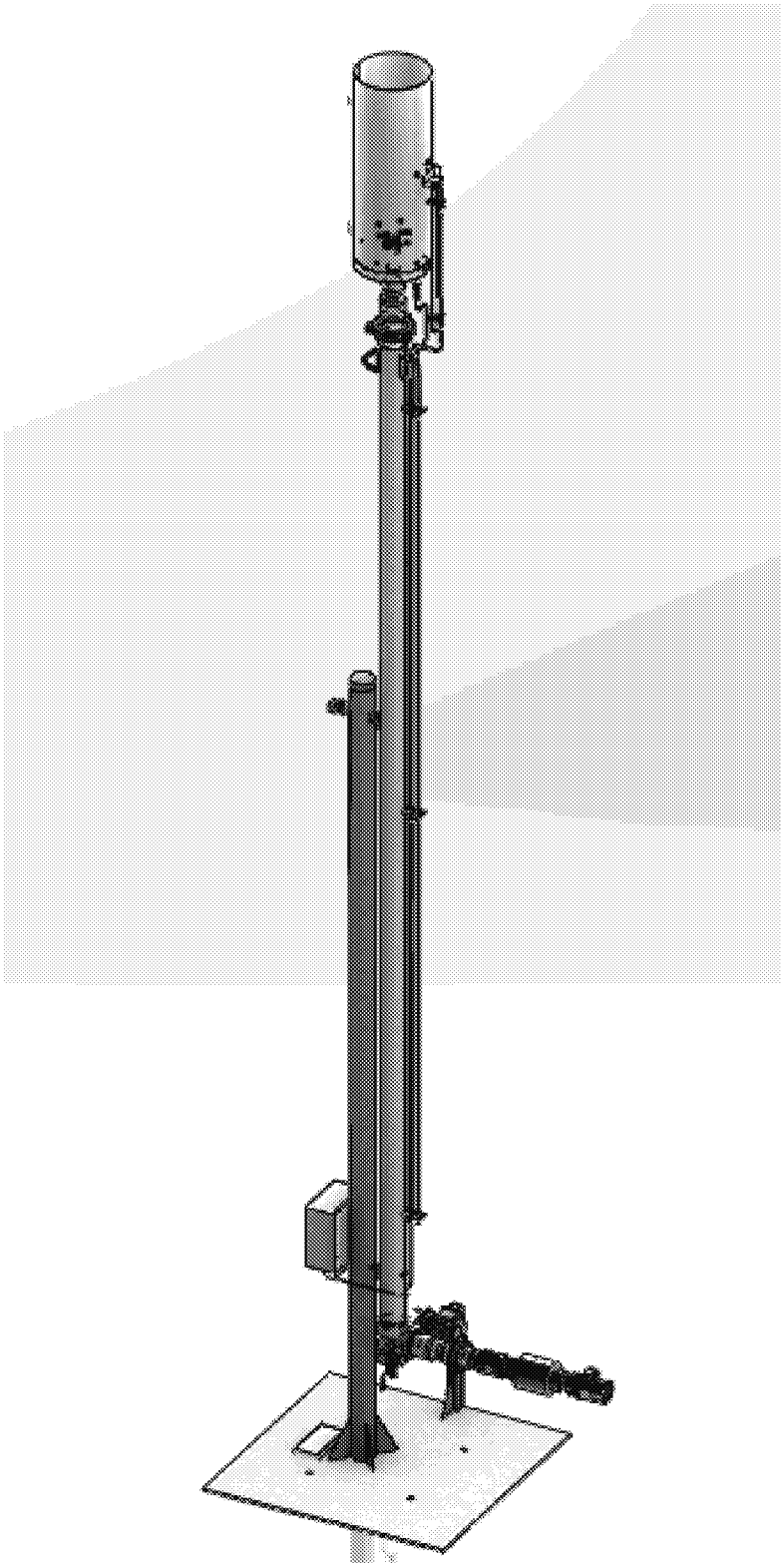

L30-0007-00

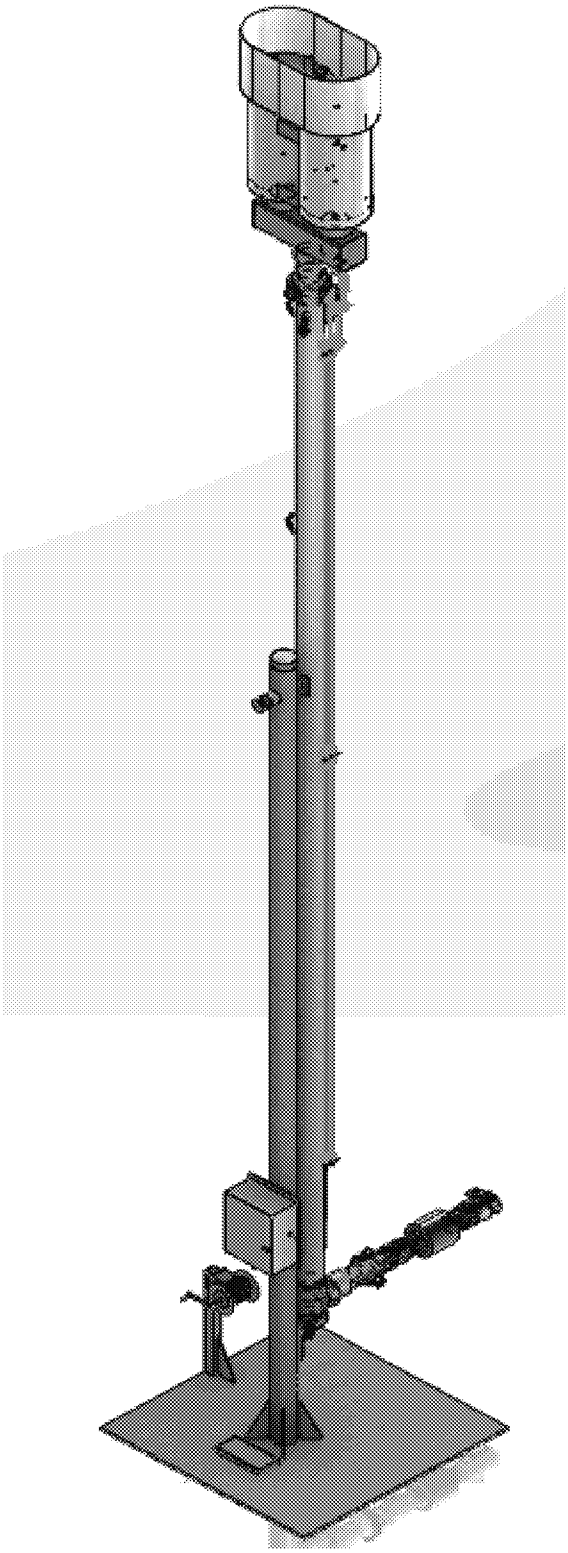

L30-0008-00

EFFICIENT
CLEAN
SAFE

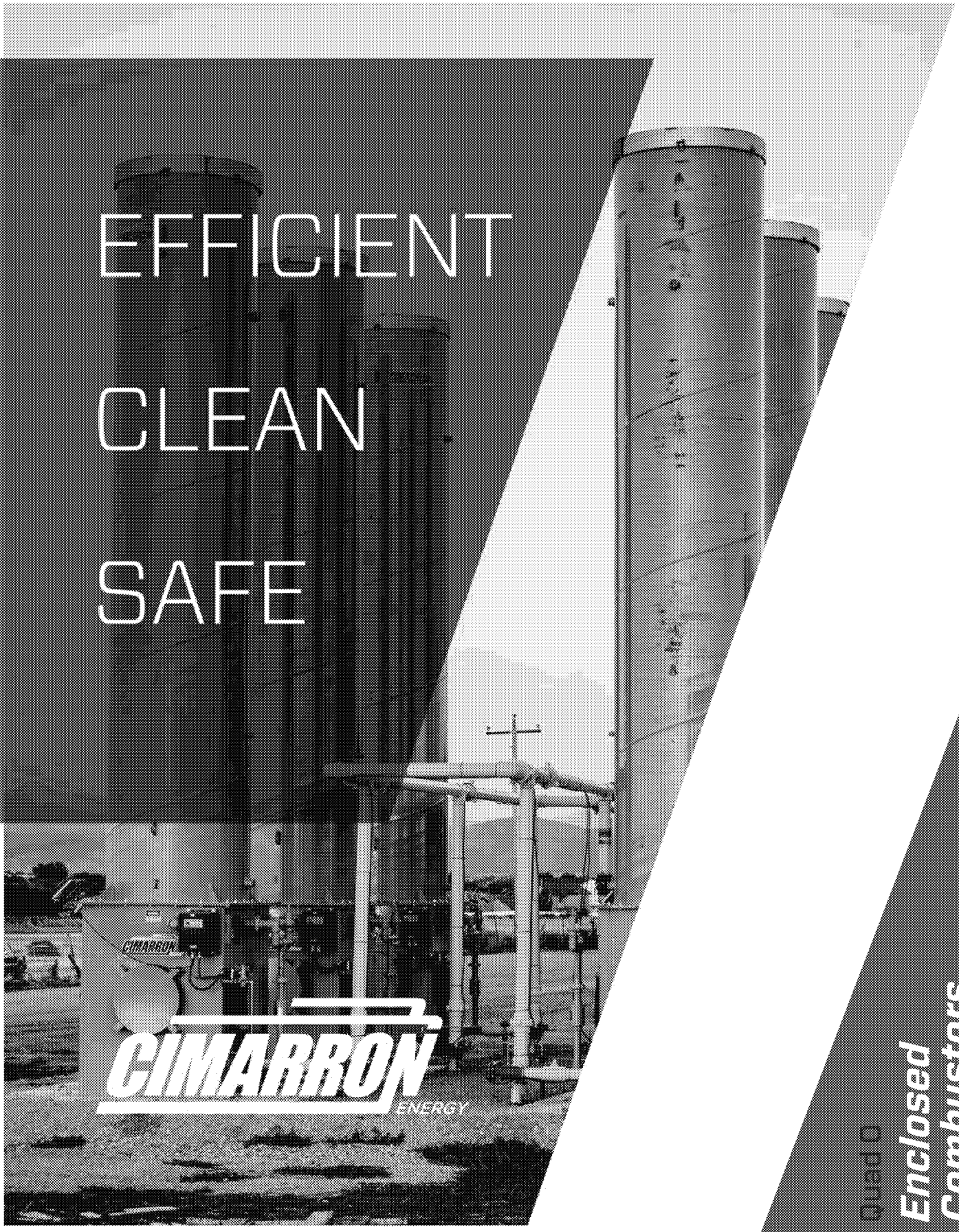

CIMARRON ENERGY

Enclosed Combustors

Quad O

CALCULATED FLOW CAPACITY CURVE
24" STANDARD ECD (2-24-64-0000)

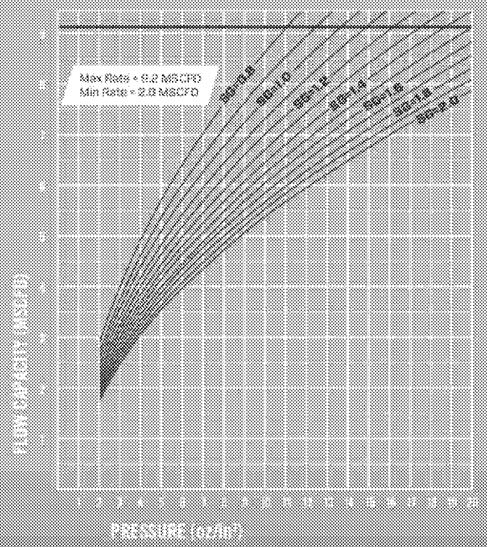

24" STANDARD

CALCULATED FLOW CAPACITY CURVE
30" STANDARD ECD (2-30-88-0000)

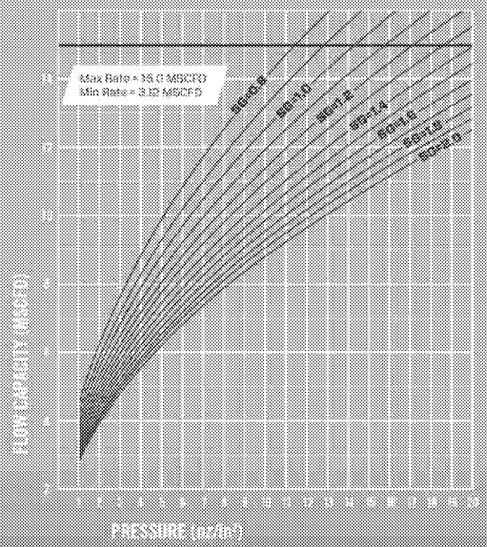

30" STANDARD

CALCULATED FLOW CAPACITY CURVE
48" STANDARD ECD (2-48-210-0000)

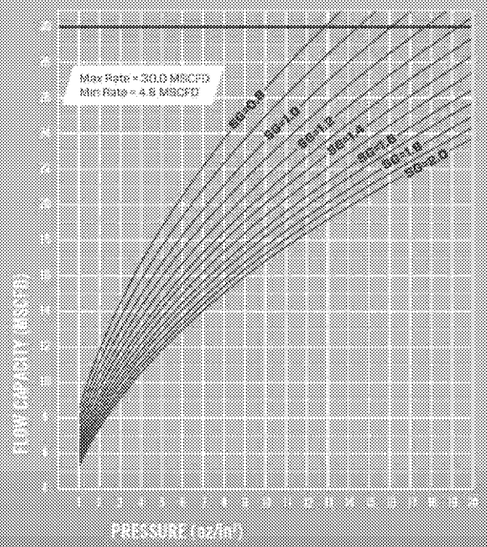

48" STANDARD

CALCULATED FLOW CAPACITY CURVE
60" STANDARD ECD (3-60-440-0000)

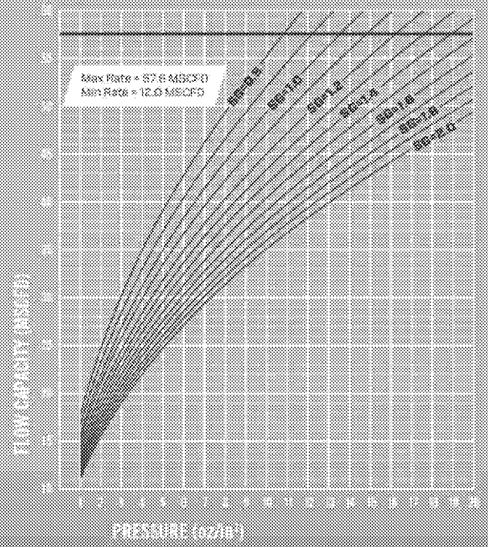

60" STANDARD

CALCULATED FLOW CAPACITY CURVE
48" HIGH VOLUME ECD (3-48HV-90-0000)

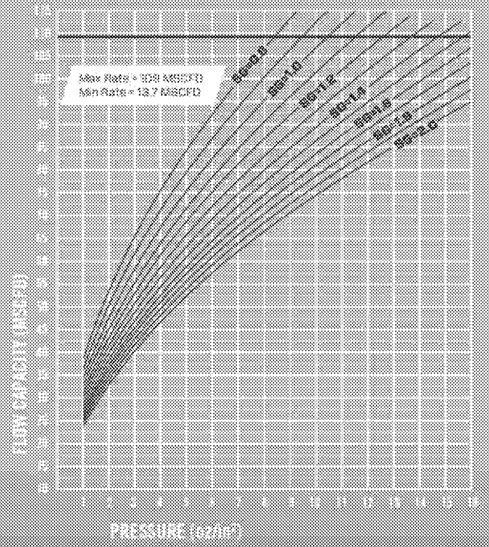

48" HIGH VOLUME

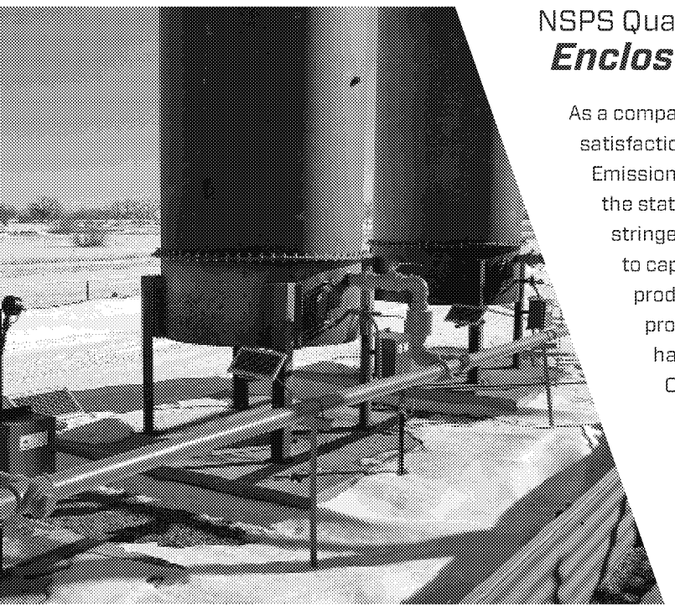

NSPS Quad O

Enclosed Combustors

As a company committed to both environmental safety and client satisfaction, Cimarron is proud to offer our Storage Tank VOC Emission Control Devices (ECD's). Pioneered in Colorado prior to the state becoming one of the first in the nation to implement stringent emission cutting rules, Cimarron's ECDs are designed to capture and combust VOC emissions from the oil/condensate production storage tanks. These enclosed combustor units provide a clean, safe, and efficient solution for eliminating hazardous vapors and ensuring regulatory compliance. All Cimarron's ECD's have been manufacturer performance tested in accordance with the EPA's strict new NSPS OOOO emission standards for storage vessel control devices. Designed for both low volume and high volume applications, Cimarron flares are enclosed for maximum safety benefits. In addition, the units are both easy to install and user friendly, offering reliable operations and low-maintenance care.

Design Features and Options

- Manufacturer Performance Tested as per NSPS OOOO §60.5413(d)
- Demonstrates VOC Destruction Efficiency >99%
- Eliminates the requirement for in-field testing to demonstrate continuous compliance.
- Solar powered BMS and data logging functions available
- Cimarron actuator package for low flow and flameout shutdown
- Drip tank for free liquid removal
- User friendly and easy to install

Quad O
Enclosed Combustors

Specifications

Unit	Max / Min Flowrate Range *	Heat Release*	Overall Dimensions (pad not included)	Inlet Connection	Flame Cell size**
24" STD	9.2 / 2.0 MSCFD	.98 MMBtu/hr	24"D x 8.5'H	3" NPT	24"
30" STD	15 / 3.12 MSCFD	1.6 MMBtu/hr	30"D x 8.5'H	3" NPT	30"
48" STD	30 / 4.8 MSCFD	3.2 MMBtu/hr	48"D x 12'H	3" NPT	48"
60" STD	57.6 / 12.0 MSCFD	6.1 MMBtu/hr	60"D x 12.5'H or 16.5'H	3" NPT	60"
48" HV	109 / 13.7 MSCFD	11.7 MMBtu/hr	48"D x 25'H	3" NPT	(4) 24"

Available Options

ARC Burner Management and Ignition systems	ARC—basic light and relight functionality. Flexible and easy to upgrade.
	ARC Hybrid—Upgrade to the ARC system. Facilitates inlet gas shutdown in the event of a pilot failure. Requires actuator option below
	ARC SAU— Upgrade to the ARC system. Allows for low flow condition shutdown and allows tanks to build pressure. Std setup is 2 oz closure and 5 oz open. Ranges are adjustable and can be modified in the field. Requires actuator option below.
Standard Drip Pot	24" x 48" w/ 4" FNPT connections. Liquid capacity 90 gal
	20" x 36" w/ 3" FNPT connections. Liquid capacity 46 gal
	16" x 36" w/ 3" FNPT connections. 5' height. Liquid capacity 29 gal.
	16" x 36" w/ 3" FNPT connections. 7' height. Liquid capacity 29 gal.
Custom Drip Pot	Required size/connections/capacity
Cimarron "Sentry" Datalogger	USB port for easy data downloads. Single analog input for pilot flame sense or thermocouple data. Two contact switch closure inputs
Actuator Package	Cimarron piston-style actuator for burner management system control. Required for Hybrid and SAU ARC systems. Ranges are adjustable and can be modified in the field.
Safety Float Check Valve option for Drip Pot	4" x 6"
	3" x 6"
Stack thermocouple	18" Type K thermocouple with wire
Concrete Pad	Standard concrete pad requested
High Temp Kit (HV unit excluded)	All stainless steel jet kit
Inline Flame arrestor	2" Wenco Flame arrestor
Header plumbing (HV unit only)	3" Wenco Flame arrestor
	2" header plumbing from integral drip box to burner manifold
	3" header plumbing from integral drip box to burner manifold

We would be glad to discuss your production equipment needs. Please contact us at your convenience at **405-928-7373** or visit our website at **CimarronEnergy.com**, where you will find a design input sheet if you would like us to address your specific requirements.

CIMARRON ENERGY