Tribal Minor Source Registration - Region 8

May, 2019

U.S. EPA Region 8 Federal Minor NSR Permit Coordinator,

The pertinent information for the attached Region 8 minor source registration form and emissions inventory is below.

Facility Name: Pelican 15-8A-7-20
County: Uintah
Owner/Operator: Finley Resources Inc.
Contact: Josh Morgan
Phone: 817-231-8756
Email: JMorgan@finleyresources.com
Mailing Address: 1308 Lake St.
Fort Worth TX 76102
Prepared by: Green Mountain Consulting, Ltd.
Mailing Address: 3649 Evergreen Parkway #1011, Evergreen, CO 80437
Phone: (405)439-3173
Email: Ian@GreenMountainLtd.com

The purposes for this submission is to register the oil and gas production facility listed above. This facility is located on Uintah and Ouray Reservation Tribal Lands.

The information was obtained from verbal and written information provided by the facility representatives. The following emissions inventory has been prepared per EPA recommendations and industry standards for emissions calculations.

Please contact Ian Green with any questions regarding this documentation.

Respectfully,

Ian Green

Managing Partner, Environmental Engineer
Email: Ian@GreenMountainLtd.com
Cell: (405)439-3173

UNITED STATES ENVIRONMENTAL PROTECTION AGENCY
FEDERAL MINOR NEW SOURCE REVIEW PROGRAM IN INDIAN COUNTRY
40 CFR 49.151

Registration for Existing Sources
(FORM REG)

Use of this information request form is voluntary and not yet approved by the Office of Management and Budget. The following is a check list of the type of information that Region 8 will use to process information on your registration. While submittal of this form is not required, it does offer details on the information we will use to complete your registration and providing the information requested will help build an existing source emissions inventory. Use of application forms for this program is currently under Office of Management and Budget review and these information request forms will be replaced/updated after that review is completed.

Please submit information to following two entities:

Federal Minor NSR Permit Coordinator
U.S. EPA, Region 8
1595 Wynkoop Street, 8P-AR
Denver, CO 80202-1129
R8airpermitting@epa.gov

For more information, visit:
http://www.epa.gov/caa-permitting/tribal-nsr-permitting-region-8

The Tribal Environmental Contact for the specific reservation:

If you need assistance in identifying the appropriate Tribal Environmental Contact and address, please contact:

R8airpermitting@epa.gov

A. GENERAL SOURCE INFORMATION

1. (a) **Company Name** (Who owns this facility?) **Finley Resources, Inc.** (b) **Operator Name** (Is the company that operates this facility different than the company that owns this facility? What is the name of the company?)	2. **Facility Name** Pelican 15-8A-7-20
3. Type of Operation **Oil and gas Production**	4. Portable Source? ☐ Yes X No 5. Temporary Source? ☐ Yes X No
6. NAICS Code **211111**	7. SIC Code **1311**
8. Physical Address (Or, home base for portable sources) 40.21309, -109.6498	

9. Reservation* **Uintah and Ouray**	10. County* **Uintah**	11a. Latitude 40.21309	11b. Longitude -109.6498
12a. Quarter Quarter Section* **SENE¼ of SENE¼**	12b. Section* 15	12c. Township* 7S	12d. Range* 20E

* Provide all locations of operation for portable sources

B. CONTACT INFORMATION

Company Contact (Who is the primary contact for the company that owns this facility?) Josh Morgan	Title Regulatory Analyst
Mailing Address 308 Lake St. Fort Worth TX 76102	
Email Address JMorgan@finleyresources.com	
Telephone Number 817-231-8756	Facsimile Number
Operator Contact (Is the company that operates this facility different than the company that owns this facility? Who is the primary contact for the company that operates this source?)	Title
Mailing Address	
Email Address	
Telephone Number	Facsimile Number
Permitting Contact (Who is the person primarily responsible for Clean Air Act permitting for the company? We are seeking one main contact for the company. Please do not list consultants.) Josh Morgan	Title Regulatory Analyst
Mailing Address 308 Lake St. Fort Worth TX 76102	
Email Address JMorgan@finleyresources.com	
Telephone Number 817-231-8756	Facsimile Number
Compliance Contact (Is the person responsible for Clean Air Act compliance for this company different than the person responsible for Clean Air Act permitting? Who is the person primarily responsible for Clean Air Act compliance for the company? We are seeking one main contact for the company. Please do not list consultants.) **Ian Green**	Title Environmental Engineer
Mailing Address 3649 Evergreen Parkway, Unit 1011, Evergreen, CO 80439	
Email Address Ian@GreenMountainLtd.com	
Telephone Number 405-439-3173	Facsimile Number

C. ATTACHMENTS

Include all of the following information as attachments to this form

X Narrative description of the operations

XIdentification and description of all emission units and air pollution generating activities (with the exception of the exempt emissions units and activities listed in §49.153(c)

X Identification and description of any existing air pollution control equipment and compliance monitoring devices or activities

XType and amount of each fuel used

X Type raw materials used

XProduction Rates

X Operating Schedules

XAny existing limitations on source operations affecting emissions or any work practice standards, where applicable, for all regulated NSR pollutants at your source.

X Total allowable (potential to emit if there are no legally and practically enforceable restrictions) emissions from the air pollution source for the following air pollutants: particulate matter, PM_{10}, $PM_{2.5}$, sulfur oxides (SO_2), nitrogen oxides (NOx), carbon monoxide (CO), volatile organic compound (VOC), lead (Pb) and lead compounds, fluorides (gaseous and particulate), sulfuric acid mist (H_2SO_4), hydrogen sulfide (H_2S), total reduced sulfur (TRS) and reduced sulfur compounds, including all calculations for the estimates.

X Estimates of the total actual emissions from the air pollution source for the following air pollutants: particulate matter, PM_{10}, $PM_{2.5}$, sulfur oxides (SO_2), nitrogen oxides (NO_x), carbon monoxide (CO), volatile organic compound (VOC), lead (Pb) and lead compounds, fluorides (gaseous and particulate), sulfuric acid mist (H_2SO_4), hydrogen sulfide (H_2S), total reduced sulfur (TRS) and reduced sulfur compounds, including all calculations for the estimates.

☐ Other

The public reporting and recordkeeping burden for this collection of information is estimated to average 6 hours per response. Send comments on the Agency's need for this information, the accuracy of the provided burden estimates, and any suggested methods for minimizing respondent burden, including through the use of automated collection techniques to the Director, Collection Strategies Division, U.S. Environmental Protection Agency (2822T), 1200 Pennsylvania Ave., NW, Washington, D.C. 20460. Include the OMB control number in any correspondence. Do not send the completed form to this address.

D. TABLE OF ESTIMATED EMISSIONS

The following estimates of the total emissions in tons/year for all pollutants contained in your worksheet stated above should be provided.

Pollutant	Total Actual Emissions (tpy)	Total Allowable or Potential Emissions (TPY)	
PM	0.120	0.120	PM - Particulate Matter PM_{10} - Particulate Matter less than 10 microns in size $PM_{2.5}$ - Particulate Matter less than 2.5 microns in size SO2 - Sulfur Oxides NOx - Nitrogen Oxides CO - Carbon Monoxide VOC - Volatile Organic Compound Pb - Lead and lead compounds Fluorides - Gaseous and particulates H_2SO_4 - Sulfuric Acid Mist H_2S - Hydrogen Sulfide TRS - Total Reduced Sulfur RSC - Reduced Sulfur Compounds
PM_{10}	0.120	0.120	
$PM_{2.5}$	0.105	0.105	
SO_2	0.006	0.006	
NO_x	1.780	1.780	
CO	1.393	1.393	
VOC	3.209	3.209	
Pb	0.000	0.000	
Fluorides	0.000	0.000	
H_2SO_4	0.000	0.000	
H_2S	0.000	0.000	
TRS	0.000	0.000	
RSC	0.000	0.000	

Emissions calculations must include fugitive emissions if the source is one the following listed sources, pursuant to CAA Section 302(j):

(a) Coal cleaning plants (with thermal dryers);
(b) Kraft pulp mills;
(c) Portland cement plants;
(d) Primary zinc smelters;
(e) Iron and steel mills;
(f) Primary aluminum ore reduction plants;
(g) Primary copper smelters;
(h) Municipal incinerators capable of charging more than 250 tons of refuse per day;
(i) Hydrofluoric, sulfuric, or nitric acid plants;
(j) Petroleum refineries;
(k) Lime plants;
(l) Phosphate rock processing plants;
(m) Coke oven batteries;
(n) Sulfur recovery plants;
(o) Carbon black plants (furnace process);
(p) Primary lead smelters;
(q) Fuel conversion plants;
(r) Sintering plants;
(s) Secondary metal production plants;
(t) Chemical process plants
(u) Fossil-fuel boilers (or combination thereof) totaling more than 250 million British thermal units per hour heat input;
(v) Petroleum storage and transfer units with a total storage capacity exceeding 300,000 barrels;
(w) Taconite ore processing plants;
(x) Glass fiber processing plants;
(y) Charcoal production plants;
(z) Fossil fuel-fired steam electric plants of more that 250 million British thermal units per hour heat input, and
(aa) Any other stationary source category which, as of August 7, 1980, is being regulated under section 111 or 112 of the Act.

Instructions

Please answer all questions. If the item does not apply to the source and its operations write "n/a". If the answer is not known write "unknown".

A. General Source Information

1. Company Name & Operator Name (if the operator of the facility is different than the owner, please provide this information): Provide the complete company and operator names. For corporations, include divisions or subsidiary names, if any.

2. Facility Name: Provide the facility name. Please note that a facility is a site, place, location, etc… that may contain one or more air pollution emitting units.

3. Type of Operation: Indicate the generally accepted name for the operation (i.e., asphalt plant, gas station, dry cleaner, sand & gravel mining, oil and gas wellsite, tank battery, etc.).

4. Portable Source: Will this facility operate in more than one location? Some examples of portable sources include asphalt batch plants and concrete batch plants.

5. Temporary Source: A temporary source, in general, would have emissions that are expected last less than 12 months.

6. NAICS Code: North American Industry Classification System. The NAICS Code for your facility can be found at the following link → North American Industry Classification System (http://www.census.gov/epcd/naics/nsic2ndx.htm#S1).

7. SIC Code: Standard Industrial Classification Code. Although the new North American Industry Classification System (NAICS) has replaced the SIC codes, much of the Clean Air Act permitting processes continue to use these codes. The SIC Code for your facility can be found at the following link → Standard Industrial Classification Code (http://www.osha.gov/pls/imis/sic_manual.html).

8. Physical Address: Provide the actual address of where you are proposing to construct the new facility, not the mailing address. Include the State and the ZIP Code.

9. Reservation: Provide the name of the Indian reservation within which the facility will be constructed.

10. County: Provide the County within which the source will be constructed.

11a & 11b. Latitude & Longitude: These are GPS (global positioning system) coordinates.

12a – 12d. Section-Township-Range: Please provide these coordinates in 1/4 Section/Section/Township/Range. (e.g., SW ¼, NE ¼ S36/T10N/R21E).

B. Contact Information

Please provide the information, requested, in full.

1. Company Contact: Provide the full name of the primary contact for the company that owns the facility.

2. Operator Contact: Provide the name of the primary contact for the company that operates the facility if the company operating the facility is different from the company that owns the facility.

3. Permitting Contact: Provide the name of primary contact, for permitting decisions, at the company that owns the facility or the company that operates the facility.

4. Compliance Contact: Provide the name of primary contact, responsible for compliance of the facility, at the company that owns the facility or the company that operates the facility. If this is the same as the Permitting Contact please note this on the form.

C. Attachments

The information requested in the attachments will enable EPA to understand the type of source being registered and the nature and extent of the air pollutants being emitted.

D. Total Emissions

1. Allowable Emissions (See also, Potential to Emit): Emissions rate of a source calculated using the maximum rated capacity of the source (unless the source is subject to practically and legally enforceable limits which restrict the operating rate, or hours of operation, or both) and the most stringent of the following:

   a) Any applicable standards as set forth in 40 CFR parts 60 and 61;

   b) Any applicable Tribal or Federal Implementation Plan emissions limitation, including those with a future compliance date; or

   c) Any emissions rate specified as a federally enforceable permit condition, including those with a future compliance date.

2. Potential to Emit: The maximum capacity of a source to emit a pollutant under its physical and operational design. Any physical or operational limitation on the capacity of the source to emit a pollutant, including air pollution control equipment and restrictions on hours of operation or on the type or amount of material combusted, stored, or processed, shall be treated as part of its design if the limitation or the effect it would have on emissions is enforceable as a practical matter. See Allowable Emissions.

3. Actual Emissions: Estimates of actual emissions must take into account equipment, operating conditions, and air pollution control measures. For a source that operated during the entire calendar year preceding the initial registration submittal, the reported actual emissions typically should be the annual emissions for the preceding calendar year, calculated using the actual

operating hours, production rates, in-place control equipment, and types of materials processed, stored, or combusted during the preceding calendar year. However, if you believe that the actual emissions in the preceding calendar year are not representative of the emissions that your source will actually emit in coming years, you may submit an estimate of projected actual emissions along with the actual emissions from the preceding calendar year and the rationale for the projected actual emissions. For a source that has not operated for an entire year, the actual emissions are the estimated annual emissions for the current calendar year.

4. The emission estimates can be based upon actual test data or, in the absence of such data, upon procedures acceptable to the Reviewing Authority. The following procedures are generally acceptable for estimating emissions from air pollution sources:

   (i) Source-specific emission tests;
   (ii) Mass balance calculations;
   (iii) Published, verifiable emission factors that are applicable to the source. (i.e., manufacturer specifications).
   (iv) Other engineering calculations; or
   (v) Other procedures to estimate emissions specifically approved by the Reviewing Authority.

5. Guidance for estimating emissions can be found at http://www.epa.gov/ttn/chief/efpac/index.html.

Utah Emissions Inventory

May 2019

Josh Morgan,

The pertinent information for the attached emissions inventory is below.

Facility Name: Pelican 15-8A-7-20
County: Uintah
Owner/Operator: Finley Resources Inc.
Mailing Address: 1308 Lake St.
Fort Worth TX 76102
Prepared by: Green Mountain Consulting, Ltd.
Mailing Address: 3649 Evergreen Parkway #1011, Evergreen, CO 80437
Phone: (405)439-3174
Email: Caitlin@GreenMountainLtd.com

The purposes for this emissions inventory are to calculate total emissions, determine all applicable state and federal regulations, and identify the appropriate air authorization for Pelican 15-8A-7-20.

The information was obtained from verbal and written information provided by the facility representatives. The following emissions inventory has been prepared per EPA recommendations and industry standards for emissions calculations.

Please contact Caitlin Green with any questions regarding this documentation.

Respectfully,

Caitlin Green

Managing Partner, Compliance Specialist
Email: Caitlin@GreenMountainLtd.com
Cell: (405)439-3174

Contents

APPLICATION SUMMARY **3**

PROJECT DESCRIPTION 3

FACILITY INFORMATION **4**

PROCESS DESCRIPTION 4
DRIVING DIRECTIONS 4
FACILITY DIAGRAM 5

EMISSIONS CALCULATIONS **6**

CALCULATION METHODOLOGY 6
EMISSIONS SUMMARY 15

REGULATORY APPLICABILITY **16**

FEDERAL RULE APPLICABILITY 16
STATE RULE APPLICABILITY 18
REGULATORY REVIEW SUMMARY 18

ATTACHMENT 1: GAS AND LIQUID LAB ANALYSES **19**

OIL AND GAS REPRESENTATIVE SAMPLE 19

ATTACHMENT 2: E&P TANKS REPORTS **26**

ATTACHMENT 3: PNEUMATIC DEVICE AND PUMP SPECIFICATIONS **33**

ATTACHMENT 4: ENGINE SPECIFICATIONS **36**

Application Summary

Project Description

Pelican 15-8A-7-20 is an oil and gas production site located in Uintah County, Utah.

Pertinent Facility Information

Facility Information	
Facility Name	Pelican 15-8A-7-20
GPS Coordinates	40.21309, -109.6498
County	Uintah
Average Daily Oil Production (bbl/day)	36.3
Average Daily Water Production (bbl/day)	11
Average Daily Gas Production (MCF/Day)	4
H2S Content of Gas (ppm)	0
Control Equipment Onsite	Yes
Site Specific or Representative Sample	Representative
Emissions Summary	
Actual Facility Wide Emissions - VOC C3+ (tpy)	3.21
Uncontrolled, Potential Facility Wide Emissions - VOC C3+ (tpy)	9.03
Facility Wide Emissions - Actual GHG (mtpy CO_2e)	1294.06
Facility Wide Emissions - Actual Total HAPs (tpy)	0.67

This facility is a Minor HAP source.

This facility is a Minor VOC source.

Pelican 15-8A-7-20 is located on and Ouray Reservation (UOR) tribal lands. The UOR air quality control and enforcement is under the jurisdiction of the EPA. The facility wide emissions exceed the minor source thresholds for non-attainment areas as promulgated in Table 1 to 40 CFR 49.153. Therefore, this facility is subject to the existing source registration requirements under 40 CFR 49.160. Registration should be completed using EPA Form No. 5900-247 (OMB Control Number: 2060-0003).

Facility Information

Process Description

Pelican 15-8A-7-20 is an oil and gas production site located in Uintah County, Utah. According to the Green Book published by the EPA, Uintah is a non-attainment area.

Fluid is pumped from two wellheads to the primary containment area. The fluid is transferred through 1 heated separation vessel to separate gas, oil, and water. Emissions from the heater treater are a result of combustion. The emission point is HT1. The fluid is then transferred through 1 separator. Separators are closed vessels and not emission points.

There is 1 40-hp engine onsite used to power the pump jacks. The emission point is ENG1.

The oil is routed to 3 storage tanks. These storage tanks are set up in parallel therefore it is assumed that the oil is equally routed to each of the tanks. The oil storage tank emissions points are OIL1-OIL3. The produced water is routed to 1 storage tank. The produced water storage tank is emission point PW1. All storage tanks have 13.5'x20' dimensions. Working and breathing losses occur in the stock tanks. Additionally, flash emissions occur from the depressurization event from the separator to the atmospheric stock tanks. Each storage tank has a tank heater; emission points TH1-TH3.

The oil and produced water are routinely trucked from the site. The emissions points from trucking are TR-O and TR-PW.

The produced gas is routed and sold via a sales meter.

The tanks are manifolded together and the recovered vapors are routed to a flare with a 98% destruction efficiency.

Driving Directions

Depart Roosevelt, UT and head east. Turn south onto State Highway 88. Continue for 8.5 miles, turn left onto 7000 S. Continue for 1.0 mile, turn left. Continue for 0.7 miles, turn right into facility.

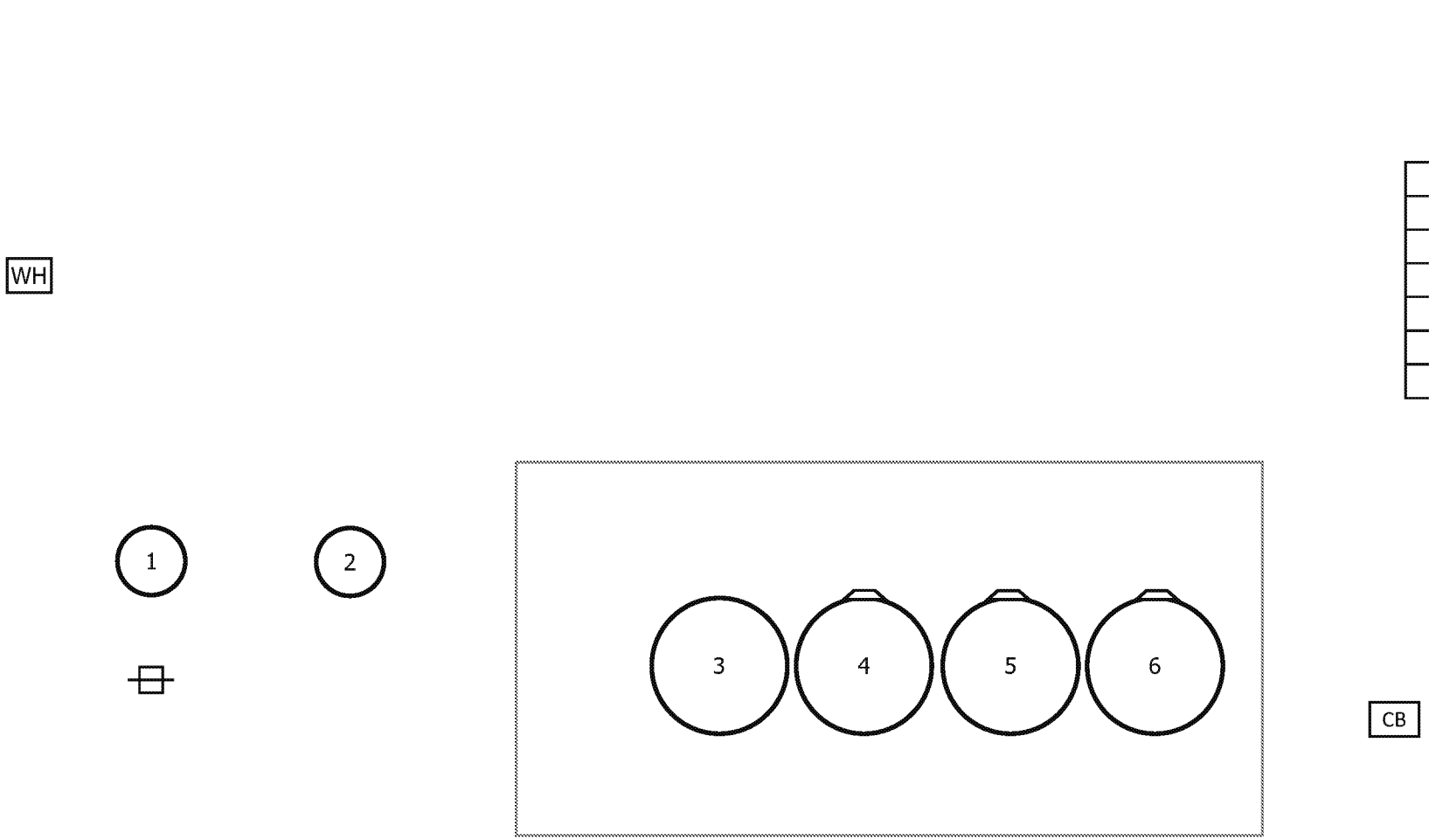

#	Type
1	SEP
2	HT
3	PW
4	OIL
5	OIL
6	OIL

Finley Resources, Inc.

Facility: Pelican 15-8-7-20

GPS: 40.21309, -109.6498
Uintah County, UT

Green Mountain Consulting, Ltd.

Drawn By: Ian Green

Date Drawn: May, 2019

Notes: Not Drawn to Scale

Legend

- Flow Meter
- Containment
- Tank Heater
- Walking Path

PW - Produced Water
SCR - Scrubber
KO - Knockout
WH - Wellhead
HT - Heater Treater

BD - Blow Down Auxiliary Tank
FLR - Flare
CB - Combustor
COMP - Compressor

Emissions Calculations

Calculation Methodology

All calculations were performed using industry standard calculation methodologies. A detailed explanation of each calculation is provided below. Any assumptions are intended to be conservative and are discussed in the appropriate section.

Oil Tanks

Oil tanks have three major sources of emissions: working losses, breathing losses, and flash losses. E&P TANKS v2011 was used to calculate the emissions associated with the onsite oil storage tanks. Attachment 2 provides a copy of the E&P TANKS report. Oil and gas lab work from a representative site, UTE 13-13A-4-1, was used to run E&P TANKS and is provided with a justification in Attachment 1.

There are 6 oil storage tanks on site. Oil is routed to the storage tanks in approximately equal quantities. One E&P tank run was completed and is used to calculate emissions from the 3 storage tanks of equal dimensions and throughput. The emissions from the storage tanks are controlled by a flare with a 98% destruction efficiency.

The oil storage tank emissions are provided in the table below.

Oil Tank Emission Rates (per tank)

	POLLUTANT	PER TANK UNCONTROLLED EMISSIONS (TPY)	TOTAL UNCONTROLLED EMISSIONS (TPY)
Regulated Air Pollutants	C1+	2.890	8.670
	VOC	1.949	5.847
	NOx	0.000	0.000
	CO	0.000	0.000
	SOx	0.000	0.000
	TSP	0.000	0.000
	PM10	0.000	0.000
	PM2.5	0.000	0.000
	H2S	0.001	0.003
HAPs	Benzene	0.005	0.015
	Toluene	0.005	0.015
	Ethylbenzene	0.001	0.003
	Xylene	0.004	0.012
	n-Hexane	0.439	1.317
	Formaldehyde	0.000	0.000
GHGs	CO2	0.024	0.072
	CH4	0.638	1.914
	N2O	0.000	0.000

Produced Water Tanks

Produced water tanks have three major sources of emissions: working losses, breathing losses, and flash losses. E&P TANKS v2011 was used to calculate the emissions associated with the on site produced water storage tanks. Attachment 2 provides a copy of the E&P TANKS report. Oil and gas lab work from a representative site, UTE 13-13A-4-1, was used to run E&P TANKS and is provided with a justification in Attachment 1.

Since E&P TANKS does not allow for direct produced water tank calculations, the produced water throughput rate was treated as an oil throughput rate. The resulting emission estimates are then reduced by 95% to account for the assumed water to oil ratio of 0.95:0.05. The 95% reduction is per the Texas Commission on Environmental Quality (TCEQ) guidance document – "Determining Emissions from Produced Water Storage Tanks"- UT-DEQ has not published specific reduction factors for produced water tanks.

There is 1 produced water tank on site. The emissions from the storage tanks are controlled by a flare with a 98% destruction efficiency.

Produced Water Tank Emission Rates

	POLLUTANT	TOTAL UNCONTROLLED EMISSIONS (TPY)
Regulated Air Pollutants	C1+	0.134
	VOC	0.091
	NOx	0.000
	CO	0.000
	SOx	0.000
	TSP	0.000
	PM10	0.000
	PM2.5	0.000
	H2S	0.000
HAPs	Benzene	0.000
	Toluene	0.000
	Ethylbenzene	0.000
	Xylene	0.000
	n-Hexane	0.021
	Formaldehyde	0.000
GHGs	CO2	0.001
	CH4	0.029
	N2O	0.000

Fugitives

Fugitive emissions are a result of equipment leaks and occur in the oil stream, the produced water stream, and the gas stream. The calculations were completed using the EPA guidance document "1995 Protocol for Equipment Leak Emission Estimates ", document ID: EPA 453/R-95-017. The component count assumptions are based on the guidance provided in 40 CFR 98 Subpart W tables W-1B and W-1C. The emission factors are used per EPA 453/R-95-017.

Facility-Wide Component Counts

COMPONENT	NUMBER
Number of Valves	21
Number of Flanges	0
Number of Connectors	36
Number of Open-Ended Lines	36
Number of Other	0
Number of Seals	3

The facility wide components comprise of the sum of the oil, produced water, and gas streams. For the purposes of these calculations it is assumed each of the streams have the same number of components except for seals. All seals are in the gas stream.

Fugitive Emission Rates

		OIL FUGITIVE EMISSIONS (TPY)	PW FUGITIVE EMISSIONS (TPY)	GAS FUGITIVE EMISSIONS (TPY)	TOTAL FUGITIVE EMISSIONS (TPY)
Regulated Air Pollutants	**C1+**	0.427	0.238	0.702	1.367
	VOC	0.278	0.155	0.458	0.891
	NOx	0.000	0.000	0.000	0.000
	CO	0.000	0.000	0.000	0.000
	SOx	0.000	0.000	0.000	0.000
	TSP	0.000	0.000	0.000	0.000
	PM10	0.000	0.000	0.000	0.000
	PM2.5	0.000	0.000	0.000	0.000
	H2S	0.000	0.000	0.000	0.000
HAPs	**Benzene**	0.039	0.022	0.064	0.124
	Toluene	0.001	0.000	0.001	0.002
	Ethylbenzene	0.001	0.001	0.002	0.004
	Xylene	0.009	0.005	0.014	0.028
	n-Hexane	0.037	0.020	0.060	0.118
	Formaldehyde	0.000	0.000	0.000	0.000
GHGs	**CO2**	0.004	0.002	0.006	0.011
	CH4	0.202	0.112	0.331	0.645
	N2O	0.000	0.000	0.000	0.000

Tank Truck Loading

Tank truck loading of both oil and produced water causes emissions losses. Both oil and produced water are transferred via trucks. All emissions associated with tank truck loading were calculated using EPA's guidance document AP-42 Chapter 5 - Petroleum Industry.

Trucking Emission Rates

	POLLUTANT	OIL TRUCKING EMISSIONS (TPY)	PW TRUCKING EMISSIONS (TPY)	TOTAL TRUCKING EMISSIONS (TPY)
Regulated Air Pollutants	C1+	1.105	0.017	1.122
	VOC	0.720	0.011	0.731
	NOx	0.000	0.000	0.000
	CO	0.000	0.000	0.000
	SOx	0.000	0.000	0.000
	TSP	0.000	0.000	0.000
	PM10	0.000	0.000	0.000
	PM2.5	0.000	0.000	0.000
	H2S	0.000	0.000	0.000
HAPs	Benzene	0.100	0.002	0.102
	Toluene	0.002	0.000	0.002
	Ethylbenzene	0.003	0.000	0.003
	Xylene	0.022	0.000	0.023
	n-Hexane	0.095	0.001	0.097
	Formaldehyde	0.000	0.000	0.000
GHGs	CO2	0.011	0.000	0.011
	CH4	0.142	0.002	0.144
	N2O	0.000	0.000	0.000

Heater Emissions

Heaters emit greenhouse gasses (GHGs) and hazardous air pollutants (HAPs) as a result of the combustion process. Emissions of NO_X, CO, GHGs, HAPs, and VOCs were calculated using the EPA's guidance document AP-42 Chapter 1 - External Combustion Sources. Xylene and Ethylbenzene emissions were calculated using emission factors published by the Air Pollution Control District in Ventura County California. To ensure conservative calculations, it is assumed that the heaters run 8760 hours per year.

At this facility there is 1 heater treaters with a heater rating of 0.5 MMBTU/hr.

Heater Treater Emission Rates

	POLLUTANT	TOTAL EMISSION RATE (TPY)
Regulated Air Pollutants	C1+	0.016
	VOC	0.010
	NOx	0.191
	CO	0.160
	SOx	0.001
	TSP	0.025
	PM10	0.014
	PM2.5	0.011
	H2S	0.000
HAPs	Benzene	0.000
	Toluene	0.000
	Ethylbenzene	0.000
	Xylene	0.000
	n-Hexane	0.003
	Formaldehyde	0.000
GHGs	CO2	228.820
	CH4	0.004
	N2O	0.004

At this facility there are 3 tank heaters with a heater rating of 0.5 MMBTU/hr.

Tank Heater Emission Rates

	POLLUTANT	PER UNIT EMISSION RATE (TPY)	TOTAL EMISSION RATE (TPY)
Regulated Air Pollutants	C1+	0.016	0.048
	VOC	0.010	0.031
	NOx	0.191	0.572
	CO	0.160	0.481
	SOx	0.001	0.003
	TSP	0.025	0.076
	PM10	0.014	0.043
	PM2.5	0.011	0.033
	H2S	0.000	0.000
HAPs	Benzene	0.000	0.000
	Toluene	0.000	0.000
	Ethylbenzene	0.000	0.000
	Xylene	0.000	0.000
	n-Hexane	0.003	0.010
	Formaldehyde	0.000	0.000
GHGs	CO2	228.820	686.460
	CH4	0.004	0.013
	N2O	0.004	0.013

Pneumatic Devices and Pumps

The facility has 1 pneumatic pump and 1 pneumatic device. Emission calculations were completed using the Western United States emission factors from Table W-1A from 40 CFR Part 98, Subpart W.

Pneumatic Pump and Device Emission Rates

	POLLUTANT	PNEUMATIC DEVICES EMISSION RATE (TPY)	PNEUMATIC PUMP EMISSION RATE (TPY)	TOTAL EMISSION RATE (TPY)
Regulated Air Pollutants	C1+	2.961	2.918	5.879
	VOC	0.462	0.455	0.918
	NOx	0.000	0.000	0.000
	CO	0.000	0.000	0.000
	SOx	0.000	0.000	0.000
	TSP	0.000	0.000	0.000
	PM10	0.000	0.000	0.000
	PM2.5	0.000	0.000	0.000
	H2S	0.000	0.000	0.000
HAPs	Benzene	0.001	0.001	0.002
	Toluene	0.001	0.001	0.002
	Ethylbenzene	0.000	0.000	0.000
	Xylene	0.001	0.001	0.001
	n-Hexane	0.000	0.000	0.000
	Formaldehyde	0.000	0.000	0.000
GHGs	CO2	0.038	0.037	0.075
	CH4	2.144	2.112	4.256
	N2O	0.000	0.000	0.000

Internal Combustion Engines

There is 1 40-hp Ajax E-565 engines onsite. The emissions associated with the engines are shown below.

Engine Emission Rates

	POLLUTANT	ENGINE EMISSION RATE (TPY)
Regulated Air Pollutants	C1+	0.593
	VOC	0.386
	NOx	1.004
	CO	0.695
	SOx	0.001
	TSP	0.121
	PM10	0.061
	PM2.5	0.061
	H2S	0.000
HAPs	Benzene	0.003
	Toluene	0.002
	Ethylbenzene	0.000
	Xylene	0.000
	n-Hexane	0.001
	Formaldehyde	0.116
GHGs	CO2	299.344
	CH4	2.286
	N2O	0.000

Glycol Dehydrator Emissions

There are no glycol dehydrators at this facility, therefore no emissions to report.

Flare Emissions

Flare emissions resulting from combustion are calculated using emission factors published in AP-42, Chapter 13 – Miscellaneous Sources. The destruction efficiency of 98% is justified in the following section. Tank vapors routed to the flare that are not destroyed are also emitted from the flare and are shown in the below table.

Flare Emission Rates

	POLLUTANT	FLARE EMISSION RATE (TPY)
Regulated Air Pollutants	C1+	0.123
	VOC	0.123
	NOx	0.013
	CO	0.058
	SOx	0.000
	TSP	0.001
	PM10	0.001
	PM2.5	0.001
	H2S	0.000
HAPs	Benzene	0.000
	Toluene	0.000
	Ethylbenzene	0.000
	Xylene	0.000
	n-Hexane	0.000
	Formaldehyde	0.000
GHGs	CO2	21.837
	CH4	0.000
	N2O	0.000

Emissions Summary

Summary table for VOC, GHG, and HAP emissions are provided below.

Summary - VOC Emissions

	VOC Emissions Potential - Uncontrolled (tpy)	VOC Emissions Potential - Controlled (tpy)
Oil Tanks	5.847	0.117
PW Tanks	0.091	0.002
Fugitives	0.891	0.891
Trucking	0.731	0.731
Heater Treaters	0.010	0.010
Tank Heaters	0.031	0.031
Pneumatics	0.918	0.918
Engines	0.386	0.386
Flares	0.123	0.123
Total	**9.029**	**3.209**

Summary –GHG Emissions

	CO2 (TPY)	METHANE (TPY)	N2O (TPY)	GHG EMISSIONS POTENTIAL (MTPY)	GHG EMISSIONS POTENTIAL (MTPY CO2e)
Oil Tanks	0.072	0.038	0.000	0.100	0.933
PW Tanks	0.001	0.001	0.000	0.002	0.014
Fugitives	0.011	0.645	0.000	0.595	14.636
Trucking	0.011	0.144	0.000	0.141	3.286
Heater Treaters	228.820	0.004	0.004	207.590	208.816
Tank Heaters	686.460	0.013	0.013	622.770	626.448
Pneumatics	0.075	4.256	0.000	3.929	96.587
Engines	299.344	2.286	0.000	273.635	323.414
Flares	21.837	0.000	0.000	19.811	19.928
Total	**1,236.632**	**7.388**	**0.017**	**1,128.573**	**1,294.062**

Summary –HAP Emissions

HAZARDOUS AIR POLLUTANT	Benzene (lb/yr)	Toluene (lb/yr)	Ethylbenzene (lb/yr)	Xylene (lb/yr)	n-Hexane (lb/yr)	Formaldehyde (lb/yr)
Oil Tanks	0.600	0.600	0.120	0.480	52.680	0.000
PW Tanks	0.008	0.010	0.002	0.008	0.836	0.000
Fugitives	247.885	3.886	7.752	55.276	235.303	0.000
Trucking	203.388	3.188	6.360	45.354	193.064	0.000
Heater Treaters	0.008	0.013	0.041	0.117	6.865	0.286
Tank Heaters	0.024	0.039	0.000	0.000	20.594	0.858
Pneumatics	3.577	3.825	0.259	2.915	0.000	0.000
Engines	6.118	3.037	0.341	0.845	1.403	231.750
Flares	0.001	0.001	0.003	0.010	0.655	0.027
Total	**461.608**	**14.599**	**14.878**	**105.005**	**511.400**	**232.922**
Maximum Single HAP	**n-Hexane**	**511.400**	**(lb/yr)**	**=**	**0.256**	**(tpy)**
Total HAP	**1340.412**	**(lb/yr)**		**=**	**0.670**	**(tpy)**

Regulatory Applicability

Federal Rule Applicability

FEDERAL REGULATIONS CITATION	TITLE	APPLICABLE	JUSTIFICATION
40 CFR 50	NAAQS	No	Emission limits are met.
NSPS 40 CFR 60, Subpart A	General Provisions	No	No NSPS requirements are applicable to this facility.
NSPS 40 CFR 60, Subpart Ka	Standards of Performance for **Storage Vessels for Petroleum Liquids** for which Construction, Reconstruction, or Modification Commenced After May 18, 1978, and **Prior** to July 23, 1984	No	Storage vessels were constructed after 7-23-84.
NSPS 40 CFR 60, Subpart Kb	Standards of Performance for **Volatile Organic Liquid Storage Vessels** (Including Petroleum Liquid Storage Vessels) for Which Construction, Reconstruction, or Modification Commenced **After** July 23, 1984	No	60.110b(d)(4) exemption applies. The vessels are less than 1589.874 m3 and store petroleum prior to the custody transfer.
NSPS 40 CFR 60.330 Subpart GG	**Stationary Gas Turbines**	No	No gas turbines on site.
NSPS 40 CFR 60, Subpart KKK	Leaks of VOC from **Onshore Gas Plants**	No	Not a gas processing plant.
NSPS 40 CFR Part 60 Subpart LLL	Standards of Performance for **Onshore Natural Gas Processing**: SO_2 Emissions	No	Not a gas processing plant.
NSPS 40 CFR Part 60 Subpart OOOO	Standards of Performance for Crude Oil and Natural Gas Production, Transmission, and Distribution	No	The storage tanks uncontrolled potential to emit is less than 6tpy therefore this rule is not applicable.
NSPS 40 CFR Part 60 Subpart OOOOa	Standards of Performance for Crude Oil and Natural Gas Facilities for which Construction, Modification or Reconstruction Commenced After September 18, 2015	Yes	40 CFR Part 60, Subpart OOOOa is applicable to the facility since the facility was constructed on 10/6/17, which is after 9/18/2015.

FEDERAL REGULATIONS CITATION	TITLE	APPLICABLE	JUSTIFICATION
NSPS 40 CFR Part 60 Subpart JJJJ	Standards of Performance for Stationary Spark Ignition Internal Combustion Engines	Yes	Initial performance test or certified engine is required.
NSPS 40 CFR Part 60 Subpart Dc	Heaters between 10-100 MMBTU/hr	No	Heater onsite has a rating below 10 MMBTU/hr.
NESHAP 40 CFR 61 Subpart A	General Provisions	No	No applicable regulations under 40 CFR 61.
MACT 40 CFR 63, Subpart A	General Provisions	No	No applicable regulations under 40 CFR 63.
MACT 40 CFR 63.760 Subpart HH	Oil and Natural Gas Production Facilities	No	Facility is an area source and has no glycol dehydrators on site; therefore, this subpart is not applicable.
MACT 40 CFR 63 Subpart HHH	National Emission Standards for Hazardous Air Pollutants From Natural Gas Transmission and Storage Facilities	No	Facility is not a natural gas transmission and storage facility that transport or store natural gas prior to entering the pipeline to a local distribution company or to a final end user.
MACT 40 CFR 63 Subpart ZZZZ	National Emissions Standards for Hazardous Air Pollutants for Stationary Reciprocating Internal Combustion Engines (RICE MACT)	Yes	Compliance is achieved when JJJJ is complied with.
NESHAP 40 CFR 64	Compliance Assurance Monitoring	No	Facility is not a major source.
40 CFR 49 Subpart C	Federal Minor New Source Review Program in Indian Country	Yes	Emissions are above registration thresholds per Table 1 to CFR 49.153. See detailed explanation below.
40 CFR 49.160	Registration Program for Minor Sources in Indian Country	Yes	Facility must register using the existing source registration form. EPA Form 5900-247.

Federal Minor New Source Review Program in Indian Country

Emissions calculations indicate that Pelican 15-8A-7-20 is subject to the registration requirements in 40 CFR Part 49. The below table shows the minor NSR thresholds as promulgated in Table 1 to 40 CFR 49.153 as well as the facility emission rates.

POLLUTANT	TABLE 1 to 40 CFR 49.153 - MINOR NSR NON-ATTAINMENT AREA TRESHOLD (TYP)	EMISSION RATE (TPY)	DOES THE FACILITY EXCEED MINOR NSR THRESHOLDS?
VOC (C3+)	2	9.029	Yes
CO	5	1.336	No
NOx	5	1.767	No
SOx	5	0.006	No
PM-10	1	0.119	No
PM-2.5	0.6	0.104	No
H2S	N/A	0.003	No

State Rule Applicability

The facility exists on the Uintah and Ouray Reservation, under federal-EPA jurisdiction. As a result, the facility is subject to applicable federal requirements and is not regulated by the UDEQ.

Regulatory Review Summary

After the completion of the regulatory review, it has been determined that Pelican 15-8A-7-20 is required to be registered with the EPA. The facility emits VOCs in quantities greater than the minor NSR thresholds listed in Table 1 to 40 CFR 49.153. The facility must register using the existing registration form (EPA Form 5900-247) to comply with the registration requirements in 40 CFR 49.160.

Federal Regulations

Facility must register using EPA Form 5900-247 to comply with 40 CFR 49.160.

State Regulations

The facility exists on Indian country lands and is subject to EPA regulation. Therefore, this facility does not have any state imposed requirements.

Attachment 1: Gas and Liquid Lab Analyses

Oil and Gas Representative Sample

A representative sample from UTE 13-13A-4-1 is being utilized for this emissions inventory for Pelican 15-8A-7-20. The representative analysis criteria published by the TCEQ was used as guidance because UT-DEQ has not published representative analysis criteria. It is not economically feasible to sample every site in the region; therefore representative samples will be used by the company.

The primary formation was determined according to the Contiguous United States AAPG-CSD Geologic Provinces Code Map.

	LEASE USING SAMPLE AS REPRESENTATIVE	LEASE WHERE SAMPLE WAS OBTAINED
Facility Name	Pelican 15-8A-7-20	UTE 13-13A-4-1
County	Uintah	Uintah
Primary Formation	Uinta Basin	Uinta Basin
API Gravity of Sales Oil	40	30.5
Separating Vessel(s)	heater treater	heater treater
Temperature (°F)	160	114
Pressure (psig)	30	70
Date of Sample	-	11/15/2016

Both facilities process the streams in a similar manner. At both sites, liquid is pumped from a wellhead to a separating vessel. The oil, produced water, and gas are separated. The oil and produced water are stored in stock tanks. The gas is sold at a sales meter.

AIR POLLUTION TESTING, INC.
DENVER, SALT LAKE CITY

5530 Marshall Street
Arvada, Colorado 80002
Phone: 303-420-5949
Fax: 303-420-5920

EXTENDED NATURAL GAS LIQUID ANALYSIS

SAMPLE DATA

PROJECT NO.	LGMT6151	SAMPLE ID.	Pressurized Liquid
COMPANY NAME.	Green Mountain Ltd	ANALYSIS DATE.	11/18/2016
SITE.	Ute 13-13A 4-1	SAMPLE DATE.	11/15/2016
UNIT ID.	Heater Treater	CYLINDER NO.	37527
SAMPLED BY.	DW	LAB ANALYST.	CB

FIELD DATA

SAMPLE PRESSURE.	70 psig	SAMPLE TEMP.	114 F
AMBIENT PRESSURE.	12.3 psi	AMBIENT TEMP.	54 F

COMMENTS: Separator Gauge Readings: 68 psig; 140 F. Probe Pressure: 69.4-69.8 psig. IR Gun Surface Temperature: 114-115 F.

LABORATORY DATA

COMPONENT	MOLE %	WT%	LV%
CARBON DIOXIDE	0.0295	0.0057	0.0061
NITROGEN (AIR)	0.0832	0.0107	0.0106
METHANE	1.6770	0.1193	0.3465
ETHANE	0.7863	0.1048	0.2562
PROPANE	1.5828	0.3094	0.5314
ISOBUTANE	0.5166	0.1331	0.2060
N-BUTANE	1.3831	0.3564	0.5314
ISOPENTANE	0.9920	0.3173	0.4421
N-PENTANE	1.2239	0.3915	0.5406
CYCLOPENTANE	0.1172	0.0364	0.0423
N-HEXANE	10.7324	4.1003	5.3782
CYCLOHEXANE	0.5548	0.2070	0.2300
OTHER HEXANES	7.3832	2.7924	3.4753
OTHER HEPTANES	2.7184	1.1995	1.4717
METHYLCYCLOHEXANE	1.0503	0.4572	0.5142
2,2,4 TRIMETHYLPENTANE	0.0756	0.0383	0.0463
BENZENE	0.1667	0.0577	0.0568
TOLUENE	0.4436	0.1812	0.1809
ETHYLBENZENE	0.1345	0.0633	0.0632
XYLENES	0.8724	0.4106	0.4105
OTHER OCTANES	3.9901	2.0044	2.3751
NONANES	3.3124	1.8814	2.1986
DECANES PLUS	60.1740	84.8219	80.6859
TOTAL	**100.00000**	**100.00000**	**100.00000**

SAMPLE FRACTIONS	TOTAL	C6+	C10+
SPG LIQUID	**0.87**	0.88	0.91
API GRAVITY	**31.1**	29.2	23.2
MOLECULAR WEIGHT	**225.6**	241.8	318.0
ABSOLUTE DENSITY (lbs/gal)	**7.3**	7.3	7.6
HEATING VALUE LIQUID IDL GAS (GBTU/gal)	**58612.7**	128265.0	131605.5
GBTU/GAL LIQUID	**127832.2**	128987.0	130622.4
NBTU/GAL LIQUID	**140155.9**	141067.5	145507.3
VAPOR/LIQUID (SCF/gal)	**16.2**	15.6	14.1
VAPOR PRESSURE (psia)	**96.1**	1.2	0.0

ANALYTICAL PROCEDURES TAKEN FROM GPA-2186, ASTM D6730-01(2011), ASTM D7169.

AIR POLLUTION TESTING, INC.
DENVER, SALT LAKE CITY

5530 Marshall Street
Arvada, Colorado 80002
Phone: 303-420-5949
Fax: 303-420-5920

EXTENDED NATURAL GAS LIQUID ANALYSIS
DHA COMPONENT ANALYSIS

SAMPLE DATA

PROJECT NO.	LGMT6151	SAMPLE ID	Pressurized Liquid
COMPANY NAME	Green Mountain Ltd	ANALYSIS DATE	11/18/2016
SITE	Ute 13-13A 4-1	SAMPLE DATE	11/15/2016
UNIT ID	Heater Treater	CYLINDER NO.	37527
SAMPLED BY	DW	LAB ANALYST	CB

FIELD DATA

SAMPLE PRESSURE	70 psig	SAMPLE TEMP	114 F
AMBIENT PRESSURE	12.3 psi	AMBIENT TEMP	54 F

COMMENTS: Separator Gauge Readings: 68 psig; 140 F. Probe Pressure: 69.4-69.8 psig. IR Gun Surface Temperature: 114-115 F.

LABORATORY DATA

COMPONENT	MOLE %	WT%	LV%
Air	0.0832	0.0107	0.0106
Carbon dioxide	0.0295	0.0057	0.0061
Methane	1.6770	0.1193	0.3465
Ethane	0.7863	0.1048	0.2562
Propane	1.5828	0.3094	0.5314
Isobutane	0.5166	0.1331	0.2060
n-Butane	1.3831	0.3564	0.5314
Cyclopentane	0.1172	0.0364	0.0423
Isopentane	0.9920	0.3173	0.4421
n-Pentane	1.2239	0.3915	0.5406
Unknown C5s	0.0000	0.0000	0.0000
Neopentane	0.0000	0.0000	0.0000
Benzene	0.1667	0.0577	0.0568
Methylcyclopentane	3.1667	1.1815	1.3648
Cyclohexane	0.5548	0.2070	0.2300
2,2-Dimethylbutane	0.0194	0.0074	0.0099
Neohexane	0.0000	0.0000	0.0000
2-Methylpentane	1.7002	0.6496	0.8593
2,3-Dimethylbutane	0.1489	0.0569	0.0743
3-Methylpentane	2.3480	0.8971	1.1670
Unknown C6s	0.0000	0.0000	0.0000
n-Hexane	10.7324	4.1003	5.3782
Toluene	0.4436	0.1812	0.1809
1,1-Dimethylcyclopentane	0.0829	0.0361	0.0414
1,t-3-Dimethylcyclopentane	0.2153	0.0937	0.1083
1,c-3-Dimethylcyclopentane	0.1908	0.0831	0.0964
1,t-2-Dimethylcyclopentane	0.3174	0.1381	0.1591
Methylcyclohexane	1.0503	0.4572	0.5142
1,c-2-Dimethylcyclopentane	0.0000	0.0000	0.0000
Ethylcyclopentane	0.0970	0.0422	0.0477
Cycloheptane	0.0000	0.0000	0.0000
2,2-Dimethylpentane	0.0136	0.0060	0.0078
2,4-Dimethylpentane	0.0000	0.0000	0.0000
2,2,3-Trimethylbutane	0.0000	0.0000	0.0000
3,3-Dimethylpentane	0.0161	0.0072	0.0089
2-Methylhexane	0.2475	0.1099	0.1400
2,3-Dimethylpentane	0.1334	0.0592	0.0737
3-Methylhexane	0.3634	0.1614	0.2032
3-Ethylpentane	0.0000	0.0000	0.0000
n-Heptane	1.0409	0.4624	0.5852
Triptane	0.0000	0.0000	0.0000
Unknown C7s	0.0000	0.0000	0.0000

Styrene	0.0000	0.0000	0.0000
Ethylbenzene	0.1345	0.0633	0.0632
o-Xylene	0.1770	0.0833	0.0820
m-Xylene	0.3902	0.1837	0.1840
p-Xylene	0.3052	0.1437	0.1445
1,1,3-Trimethylcyclopentane	0.0000	0.0000	0.0000
1,t-2,c-4-Trimethylcyclopentane	0.1330	0.0662	0.0766
1,t-2,c-3-Trimethylcyclopentane	0.1733	0.0862	0.0990
1,c-3-Dimethylcyclohexane	0.0163	0.0081	0.0092
1,t-4-Dimetylcyclohexane	0.1347	0.0670	0.0761
1,1-Dimethylcyclohexane	0.0653	0.0325	0.0360
1-Methyl-c-3-ethylcyclopentane	0.0399	0.0199	0.0223
1-Methyl-t-2-ethylcyclopentane	0.0000	0.0000	0.0000
1,1,2-Trimethylcyclopentane	0.1014	0.0505	0.0565
1,c-2,t-4-Trimethylcyclopentane	0.0000	0.0000	0.0000
1,c-2,t-3-Trimethylcyclopentane	0.4450	0.2214	0.2487
1-Methyl-t-3-ethylcyclopentane	0.0325	0.0162	0.0183
1-Methyl-1-ethylcyclopentane	0.1187	0.0591	0.0655
1,t-3-Dimethylcyclohexane	0.0000	0.0000	0.0000
1,c-4-Dimethylcyclohexane	0.0000	0.0000	0.0000
1,c-2,c-3-Trimethylcyclopentane	0.2122	0.1055	0.1173
Isopropylcyclopentane	0.0319	0.0159	0.0177
1-Ethyl-c-2-methylcyclopentane	0.0000	0.0000	0.0000
1,c-2-Dimethylcyclohexane	0.0000	0.0000	0.0000
n-Propylcyclopentane	0.2734	0.1360	0.1517
Ethylcyclohexane	0.0336	0.0167	0.0184
Cyclooctane	0.0000	0.0000	0.0000
n-Octane	1.0578	0.5357	0.6604
Unknown C8s	0.0000	0.0000	0.0000
Diisobutyl	0.0000	0.0000	0.0000
Isooctane	0.0000	0.0000	0.0000
2,2,4-Trimethylpentane	0.0756	0.0383	0.0463
2,2-Dimethylhexane	0.1552	0.0786	0.0977
2,4-Dimethylhexane	0.0358	0.0181	0.0224
2,5-Dimethylhexane	0.0000	0.0000	0.0000
2,2,3-Trimethylpentane	0.0000	0.0000	0.0000
3,3-Dimethylhexane	0.0000	0.0000	0.0000
2,3,4-Trimethylpentane	0.0081	0.0041	0.0049
2,3-Dimethylhexane	0.0320	0.0162	0.0197
2-Methylheptane	0.6030	0.3054	0.3785
4-Methylheptane	0.1587	0.0804	0.0987
3-Methylheptane	0.1281	0.0649	0.0795
3,4-Dimethylhexane	0.0000	0.0000	0.0000
3-Ethylhexane	0.0000	0.0000	0.0000
C9	3.3124	1.8814	2.1986
C10	3.6019	2.2720	2.6940
C11	2.6409	1.8301	2.1407
C12	2.0577	1.5539	1.7963
C13	2.9283	2.3934	2.5244
C14	2.4924	2.1921	2.2817
C15	2.3209	2.1857	2.2588
C16	1.5313	1.5373	1.5757
C17	1.8395	1.9610	2.0194
C18	1.9287	2.1761	2.2330
C19	1.9381	2.3072	2.3399
C20	1.6938	2.1217	2.1394
C21	1.1232	1.4767	1.4804
C22	1.7314	2.3842	2.3764
C23	1.1855	1.7061	1.6928
C24	1.2857	1.9303	1.9066
C25	1.3642	2.1330	2.0972
C26	1.1025	1.7924	1.7544
C27	1.5331	2.5877	2.5216
C28	1.1849	2.0737	2.0116
C29	1.1827	2.1434	2.0723
C30+	23.5072	44.0638	38.7693
TOTAL	100.0000	100.0000	100.0000

AIR POLLUTION TESTING, INC.
DENVER, SALT LAKE CITY

5530 Marshall Street
Arvada, Colorado 80002
Phone: 303-420-5949
Fax: 303-420-5920

EXTENDED NATURAL GAS LIQUIDS ANALYSIS
BY CARBON NUMBER

SAMPLE DATA

PROJECT NO.	LGMT6151	SAMPLE ID.	Pressurized Liquid
COMPANY NAME	Green Mountain Ltd	ANALYSIS DATE	11/18/2016
SITE	Ute 13-13A 4-1	SAMPLE DATE	11/15/2016
UNIT ID	Heater Treater	CYLINDER NO.	37527
SAMPLED BY	DW	LAB ANALYST	CB

FIELD DATA

SAMPLE PRESSURE	70 psig	SAMPLE TEMP.	114 F
AMBIENT PRESSURE	12.3 psi	AMBIENT TEMP.	54 F

COMMENTS: Separator Gauge Readings: 68 psig; 140 F. Probe Pressure: 69.4-69.8 psig. IR Gun Surface Temperature: 114-115 F.

LABORATORY DATA

COMPONENT	MOLE %	WT%	LV%
Air	0.0832	0.0107	0.0106
Carbon dioxide	0.0295	0.0057	0.0061
C1	1.6770	0.1193	0.3465
C2	0.7863	0.1048	0.2562
C3	1.5828	0.3094	0.5314
C4	1.8997	0.4895	0.7374
C5	2.3332	0.7452	1.0251
C6	18.8371	7.1574	9.1403
C7	4.2123	1.8379	2.1669
C8	5.0726	2.5167	2.8951
C9	3.3124	1.8814	2.1986
C10	3.6019	2.2720	2.6940
C11	2.6409	1.8301	2.1407
C12	2.0577	1.5539	1.7963
C13	2.9283	2.3934	2.5244
C14	2.4924	2.1921	2.2817
C15	2.3209	2.1857	2.2588
C16	1.5313	1.5373	1.5757
C17	1.8395	1.9610	2.0194
C18	1.9287	2.1761	2.2330
C19	1.9381	2.3072	2.3399
C20	1.6938	2.1217	2.1394
C21	1.1232	1.4767	1.4804
C22	1.7314	2.3842	2.3764
C23	1.1855	1.7061	1.6928
C24	1.2857	1.9303	1.9066
C25	1.3642	2.1330	2.0972
C26	1.1025	1.7924	1.7544
C27	1.5331	2.5877	2.5216
C28	1.1849	2.0737	2.0116
C29	1.1827	2.1434	2.0723
C30+	23.5072	44.0638	38.7693
TOTAL	100.0000	100.0000	100.0000

The following files were used in generating this report:
C:\Resultfiles1\DHA_2_37527_161118114052.xml
C:\Chem32\2\DATA\DHA\37527_11202016_0402.csv
C:\AscentSimdis\Output\Ute_11202016.csv

AIR POLLUTION TESTING, INC.
DENVER, SALT LAKE CITY

5530 Marshall Street
Arvada, Colorado 80002
Phone: 303-420-5949
Fax: 303-420-5920

PHYSICAL PROPERTY TESTING

SAMPLE DATA

PROJECT NO.	LGMT6151	SAMPLE ID	Sales Oil
COMPANY NAME	Green Mountain Ltd	ANALYSIS DATE	11/18/2016
SITE	Ute 13-13A 4-1	SAMPLE DATE	11/15/2016
UNIT ID	Tank #3	CYLINDER NO.	Jar
SAMPLED BY	DW	LAB ANALYST	CB

FIELD DATA

SAMPLE PRESSURE	Ambient	SAMPLE TEMP.	123 F
AMBIENT PRESSURE	12.3 psi	AMBIENT TEMP.	54 F

COMMENTS:

LABORATORY DATA

API GRAVITY	=	30.5
REID VAPOR PRESSURE	=	3.5 psi

NOTES: API GRAVITY MEASURED USING ASTM D1298/D287

VAPOR PRESSURE MEASURED USING ASTM D6377/6378

AIR POLLUTION TESTING, INC.
DENVER, SALT LAKE CITY

5530 Marshall Street
Arvada, Colorado 80002
Phone: 303-420-5949
Fax: 303-420-5920

EXTENDED GAS ANALYSIS

SAMPLE DATA

PROJECT NO	LGMT6151	SAMPLE ID	Sales Gas
COMPANY NAME	Green Mountain	ANALYSIS DATE	11/18/2016
SITE	Ute 13-13A 4-1	SAMPLE DATE	11/15/2016
UNIT ID	Ute 13-13A 4-1	CYLINDER NO	GV-12
SAMPLED BY	DW	LAB ANALYST	CB

FIELD DATA

SAMPLE PRESSURE	60 psi	SAMPLE TEMP	81 F
AMBIENT PRESSURE	12.3 psi	AMBIENT TEMP	54 F

COMMENTS: **H2S = 18 ppm***
*ASTM Method D4810 Length of Stain

LABORATORY DATA

COMPONENT	MOLE %	WT%	GPM
HYDROGEN SULFIDE	0.0000	0.0000	0.0000
CARBON DIOXIDE	0.5596	1.2720	0.0955
NITROGEN	0.5154	0.7457	0.0567
METHANE	86.8071	71.9299	14.7225
ETHANE	6.3882	9.9216	1.7091
PROPANE	3.3206	7.5631	0.9152
ISOBUTANE	0.5029	1.5098	0.1646
N-BUTANE	0.8761	2.6301	0.2763
ISOPENTANE	0.2709	1.0097	0.0991
N-PENTANE	0.2514	0.9368	0.0912
CYCLOPENTANE	0.0228	0.0827	0.0068
N-HEXANE	0.0769	0.3422	0.0316
CYCLOHEXANE	0.0168	0.0729	0.0057
OTHER HEXANES	0.1386	0.6171	0.0570
HEPTANES	0.0811	0.4199	0.0375
METHYLCYCLOHEXANE	0.0183	0.0929	0.0074
2,2,4 TRIMETHYLPENTANE	0.0072	0.0427	0.0036
BENZENE	0.0075	0.0302	0.0021
TOLUENE	0.0068	0.0322	0.0023
ETHYLBENZENE	0.0004	0.0022	0.0002
XYLENES	0.0045	0.0249	0.0018
C8+ HEAVIES	0.1034	0.6828	0.0581
SUBTOTAL	99.9766	99.9614	18.3443
OXYGEN/ARGON	0.0234	0.0386	0.0021
TOTAL	100	100	18.3464

		BTU @	
MOLECULAR WEIGHT	19.3606	NET DRY REAL	1055.8844 ***/scf***
RELATIVE DENSITY (AIR=1)	0.6685		
COMPRESSIBILITY FACTOR	0.9970	GROSS DRY REAL	1168.4676 ***/scf***
		GROSS WET REAL	1148.5006 ***/scf***

ANALYTICAL PROCEDURES TAKEN FROM GPA 2286-95

Attachment 2: E&P Tanks Reports

```
*****************************************************************************************
*     Project Setup Information                                                         *
*****************************************************************************************
Project File               : G:\My Drive\Green Mountain Consulting Ltd\Production\Finley -102618 - New Drill PBRs\Tribal
Flowsheet Selection        : Oil Tank with Separator
Calculation Method         : AP42
Control Efficiency         :  0.00%
Known Separator Stream     : Low Pressure Oil
Entering Air Composition   : No
Component Group            : C10+

Well ID                    : Pelican 15-8A-7-20
Permit Number              : Oil Tanks
Date                       : 2019.05.09


*****************************************************************************************
*     Data Input                                                                        *
*****************************************************************************************

Separator Pressure (psia)          : 44.70
Separator Temperature (F)          : 160.0
C10+ SG                            : 0.91
C10+ MW(lb/lbmol)                  : 318.00

-- Low Pressure Oil ----------------------------------------------------------------
No.   Component            Mole%    Wt%
1     H2S                    0.0018   0.0003
2     O2                     0.0000   0.0000
3     CO2                    0.0295   0.0058
4     N2                     0.0832   0.0103
5     C1                     1.6770   0.1192
6     C2                     0.7863   0.1048
7     C3                     1.5828   0.3094
8     i-C4                   0.5166   0.1331
9     n-C4                   1.3831   0.3563
10    i-C5                   0.9920   0.3173
11    n-C5                   1.3411   0.4289
12    C6                     8.9882   3.4328
13    C7                     2.7184   1.2074
14    C8                     3.9900   2.0203
15    C9                     3.3123   1.8835
16    C10+                  60.1727  84.8197
17    Benzene                0.1667   0.0577
18    Toluene                0.4436   0.1812
19    E-Benzene              0.1345   0.0633
20    Xylenes                0.8724   0.4106
21    n-C6                  10.7322   4.0998
22    224Trimethylp          0.0756   0.0383

-- Sales Oil -----------------------------------------------------------------------
Production Rate (bbl/day)      : 12.10
Days of Annual Operation       : 365
API Gravity                    : 30.50
Reid Vapor Pressure (psia)     : 3.50
Bulk Temperature               : 150.0

-- Tank and Shell Data -------------------------------------------------------------
Diameter (ft)                  : 13.50
Shell Height (ft)              : 20.00
Cone Roof Slope                : 0.06
Average Liquid Height (ft)     : 15.00
Vent Pressure Range (psia)     : 0.06
Solar Absorbance               : 0.54

-- Meteorological Data -------------------------------------------------------------
```

City : Salt Lake City, UT
Min Ambient Temperature (F) : 39.3
Max Ambient Temperature (F) : 64.0
Total Solar Insolation (F) : 1603.00
Ambient Pressure (psia) : 14.70
Ambient Temperature (F) : 70.0

****
* Calculation Results *
****

-- Emission Summary --

	Uncontrolled ton
Total HAPs	0.4550
Total HC	2.8900
VOCs, C2+	2.2510
VOCs, C3+	1.9490
CO2	0.0240
CH4	0.6380

Uncontrolled Recovery Information:
Vapor(mscfd): 0.1731
HC Vapor(mscfd): 0.1672
CO2(mscfd): 0.0000
CH4(mscfd): 0.0800
GOR(SCF/STB): 14.3091

-- Emission Composition --

NoComponent	Uncontrolled ton
1 H2S	0.0010
2 O2	0.0000
3 CO2	0.0240
4 N2	0.0630
5 C1	0.6380
6 C2	0.3020
7 C3	0.4890
8 i-C4	0.1260
9 n-C4	0.2570
10 i-C5	0.1140
11 n-C5	0.1220
12 C6	0.3620
13 Benzene	0.0050
14 Toluene	0.0050
15 E-Benzene	0.0010
16 Xylenes	0.0040
17 n-C6	0.4390
18 224Trimethylp	0.0020
19 Pseudo Comp1	0.0240
20 Pseudo Comp2	0.0000
21 Pseudo Comp3	0.0000
22 Pseudo Comp4	0.0000
23 Pseudo Comp5	0.0000
24 Total	2.9780

-- Stream Data --

NoComponent	MW lb/lbmol	LP Oil mole %	Flash Oil mole %	Sales Oil mole %	Flash Gas mole %	W&S Gas mole %	Total Emission mole %
1 H2S	34.08	0.0018	0.0013	0.0002	0.0235	0.0151	0.0218
2 O2	32.00	0.0000	0.0000	0.0000	0.0000	0.0000	0.0000
3 CO2	44.01	0.0295	0.0103	0.0000	0.8338	0.0001	0.6645
4 N2	28.01	0.0832	0.0038	0.0000	3.4099	0.0001	2.7172
5 C1	16.04	1.6770	0.2873	0.0000	59.9096	0.0001	47.7398
6 C2	30.07	0.7863	0.4589	0.0200	14.5069	2.3899	12.0455
7 C3	44.10	1.5828	1.3521	0.4978	11.2499	21.3209	13.2957

8	i-C4	58.12	0.5166	0.4898	0.3083	1.6401	6.3563	2.5981
9	n-C4	58.12	1.3831	1.3454	0.9707	2.9641	14.5100	5.3095
10	i-C5	72.15	0.9920	0.9956	0.8729	0.8415	6.0158	1.8926
11	n-C5	72.15	1.3411	1.3531	1.2287	0.8379	6.6896	2.0266
12	C6	84.00	8.9882	9.1620	9.0295	1.7037	18.7879	5.1741
13	Benzene	78.11	0.1667	0.1701	0.1700	0.0226	0.2590	0.0706
14	Toluene	92.14	0.4436	0.4538	0.4644	0.0165	0.2514	0.0642
15	E-Benzene	106.17	0.1345	0.1377	0.1420	0.0016	0.0314	0.0077
16	Xylenes	106.17	0.8724	0.8930	0.9216	0.0092	0.1830	0.0445
17	n-C6	86.18	10.7322	10.9405	10.7872	2.0035	22.2496	6.1162
18	224Trimethylp	114.23	0.0756	0.0773	0.0785	0.0052	0.0688	0.0181
19	Pseudo Comp1	147.45	31.1615	31.9047	33.0649	0.0205	0.8698	0.1930
20	Pseudo Comp2	259.55	15.5311	15.9017	16.4907	0.0000	0.0013	0.0003
21	Pseudo Comp3	361.36	10.4094	10.6578	11.0525	0.0000	0.0000	0.0000
22	Pseudo Comp4	495.20	7.7625	7.9477	8.2421	0.0000	0.0000	0.0000
23	Pseudo Comp5	749.15	5.3289	5.4561	5.6581	0.0000	0.0000	0.0000

	LP Oil	Flash Oil	Sales Oil	Flash Gas	W&S Gas	Total Emission
MW (lb/lbmol):	224.76	229.47	234.83	27.39	68.40	35.72
Stream Mole Ratio:	1.0000	0.9767	0.9708	0.0233	0.0059	0.0292
Stream Weight Ratio:	224.76	224.12	227.96	0.64	0.41	1.04
Total Emission (ton):				1.820	1.158	2.978
Heating Value (BTU/scf):				1529.06	3662.10	1962.36
Gas Gravity (Gas/Air):				0.95	2.36	1.23
Bubble Pt. @100F (psia):	80.57	18.40	3.21			
RVP @100F (psia):	93.14	43.68	19.58			
Spec. Gravity @100F:	0.94	0.94	0.94			

```
*****************************************************************************************
*     Project Setup Information                                                         *
*****************************************************************************************
Project File               : G:\My Drive\Green Mountain Consulting Ltd\Production\Finley -102618 - New Drill PBRs\Tribal
Flowsheet Selection        : Oil Tank with Separator
Calculation Method         : AP42
Control Efficiency         :  0.00%
Known Separator Stream     : Low Pressure Oil
Entering Air Composition   : No
Component Group            : C10+

Well ID                    : Pelican 15-8A-7-20
Permit Number              : PW Tanks
Date                       : 2019.05.09


*****************************************************************************************
*     Data Input                                                                        *
*****************************************************************************************

Separator Pressure (psia)          : 44.70
Separator Temperature (F)          : 160.0
C10+ SG                            : 0.91
C10+ MW(lb/lbmol)                  : 318.00

-- Low Pressure Oil ----------------------------------------------------------------
No.   Component            Mole%    Wt%
1     H2S                    0.0018   0.0003
2     O2                     0.0000   0.0000
3     CO2                    0.0295   0.0058
4     N2                     0.0832   0.0103
5     C1                     1.6770   0.1192
6     C2                     0.7863   0.1048
7     C3                     1.5828   0.3094
8     i-C4                   0.5166   0.1331
9     n-C4                   1.3831   0.3563
10    i-C5                   0.9920   0.3173
11    n-C5                   1.3411   0.4289
12    C6                     8.9882   3.4328
13    C7                     2.7184   1.2074
14    C8                     3.9900   2.0203
15    C9                     3.3123   1.8835
16    C10+                  60.1727  84.8197
17    Benzene                0.1667   0.0577
18    Toluene                0.4436   0.1812
19    E-Benzene              0.1345   0.0633
20    Xylenes                0.8724   0.4106
21    n-C6                  10.7322   4.0998
22    224Trimethylp          0.0756   0.0383

-- Sales Oil -----------------------------------------------------------------------
Production Rate (bbl/day)      : 11.10
Days of Annual Operation       : 365
API Gravity                    : 30.50
Reid Vapor Pressure (psia)     : 3.50
Bulk Temperature               : 150.0

-- Tank and Shell Data -------------------------------------------------------------
Diameter (ft)                  : 13.50
Shell Height (ft)              : 20.00
Cone Roof Slope                : 0.06
Average Liquid Height (ft)     : 15.00
Vent Pressure Range (psia)     : 0.06
Solar Absorbance               : 0.54

-- Meteorological Data -------------------------------------------------------------
```

City : Salt Lake City, UT
Min Ambient Temperature (F) : 39.3
Max Ambient Temperature (F) : 64.0
Total Solar Insolation (F) : 1603.00
Ambient Pressure (psia) : 14.70
Ambient Temperature (F) : 70.0

****
* Calculation Results *
****

-- Emission Summary --

	Uncontrolled ton
Total HAPs	0.4330
Total HC	2.6880
VOCs, C2+	2.1030
VOCs, C3+	1.8280
CO2	0.0220
CH4	0.5850

Uncontrolled Recovery Information:

Vapor(mscfd):	0.1596
HC Vapor(mscfd):	0.1542
CO2(mscfd):	0.0000
CH4(mscfd):	0.0800
GOR(SCF/STB):	14.3829

-- Emission Composition --

NoComponent	Uncontrolled ton
1 H2S	0.0010
2 O2	0.0000
3 CO2	0.0220
4 N2	0.0580
5 C1	0.5850
6 C2	0.2750
7 C3	0.4470
8 i-C4	0.1170
9 n-C4	0.2400
10 i-C5	0.1070
11 n-C5	0.1150
12 C6	0.3450
13 Benzene	0.0040
14 Toluene	0.0050
15 E-Benzene	0.0010
16 Xylenes	0.0040
17 n-C6	0.4180
18 224Trimethylp	0.0020
19 Pseudo Comp1	0.0230
20 Pseudo Comp2	0.0000
21 Pseudo Comp3	0.0000
22 Pseudo Comp4	0.0000
23 Pseudo Comp5	0.0000
24 Total	2.7690

-- Stream Data --

NoComponent	MW lb/lbmol	LP Oil mole %	Flash Oil mole %	Sales Oil mole %	Flash Gas mole %	W&S Gas mole %	Total Emission mole %
1 H2S	34.08	0.0018	0.0013	0.0002	0.0235	0.0138	0.0215
2 O2	32.00	0.0000	0.0000	0.0000	0.0000	0.0000	0.0000
3 CO2	44.01	0.0295	0.0103	0.0000	0.8338	0.0001	0.6606
4 N2	28.01	0.0832	0.0038	0.0000	3.4099	0.0001	2.7016
5 C1	16.04	1.6770	0.2873	0.0000	59.9096	0.0001	47.4642
6 C2	30.07	0.7863	0.4589	0.0157	14.5069	1.9102	11.8901
7 C3	44.10	1.5828	1.3521	0.4717	11.2499	20.6290	13.1983

8	i-C4	58.12	0.5166	0.4898	0.3006	1.6401	6.3361	2.6156
9	n-C4	58.12	1.3831	1.3454	0.9534	2.9641	14.5722	5.3755
10	i-C5	72.15	0.9920	0.9956	0.8661	0.8415	6.1065	1.9352
11	n-C5	72.15	1.3411	1.3531	1.2216	0.8379	6.8035	2.0772
12	C6	84.00	8.9882	9.1620	9.0166	1.7037	19.1933	5.3369
13	Benzene	78.11	0.1667	0.1701	0.1699	0.0226	0.2647	0.0729
14	Toluene	92.14	0.4436	0.4538	0.4646	0.0165	0.2573	0.0665
15	E-Benzene	106.17	0.1345	0.1377	0.1421	0.0016	0.0321	0.0080
16	Xylenes	106.17	0.8724	0.8930	0.9226	0.0092	0.1874	0.0462
17	n-C6	86.18	10.7322	10.9405	10.7720	2.0035	22.7311	6.3094
18	224Trimethylp	114.23	0.0756	0.0773	0.0784	0.0052	0.0704	0.0187
19	Pseudo Comp1	147.45	31.1615	31.9047	33.1069	0.0205	0.8908	0.2012
20	Pseudo Comp2	259.55	15.5311	15.9017	16.5123	0.0000	0.0013	0.0003
21	Pseudo Comp3	361.36	10.4094	10.6578	11.0670	0.0000	0.0000	0.0000
22	Pseudo Comp4	495.20	7.7625	7.9477	8.2528	0.0000	0.0000	0.0000
23	Pseudo Comp5	749.15	5.3289	5.4561	5.6656	0.0000	0.0000	0.0000

	LP Oil	Flash Oil	Sales Oil	Flash Gas	W&S Gas	Total Emission
MW (lb/lbmol):	224.76	229.47	235.02	27.39	68.93	36.02
Stream Mole Ratio:	1.0000	0.9767	0.9706	0.0233	0.0061	0.0294
Stream Weight Ratio:	224.76	224.12	228.11	0.64	0.42	1.06
Total Emission (ton):				1.668	1.101	2.769
Heating Value (BTU/scf):				1529.06	3686.88	1977.32
Gas Gravity (Gas/Air):				0.95	2.38	1.24
Bubble Pt. @100F (psia):	80.57	18.40	3.12			
RVP @100F (psia):	93.14	43.68	19.05			
Spec. Gravity @100F:	0.94	0.94	0.94			

Attachment 3: Pneumatic Device and Pump Specifications

Model 143-80 Service Regulator

Technical Data

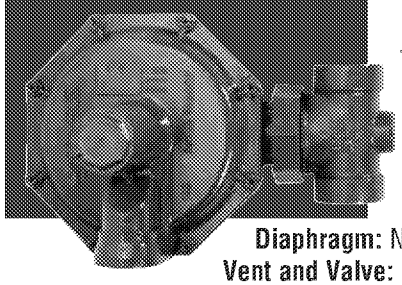

Models:
143-80-1
143-80-2
143-80-2HP

Valve Body: Cast Iron, 125 psig Working Pressure	**Straight Body**
Spring and Lower Case: Die-Cast Aluminum	3/4" x 3/4"
Orifice: Stainless Steel	3/4" x 1"
Fulcrum Pin: Aluminum or Brass	3/4" x 1-1/4"
Valve Seat/Stem: One piece molded Buna-N seat pad and fiberglass reinforced nylon stem	1" x 1"
Throat/Support/Stem Guide: Cast Aluminum integral to lower case	1" x 1-1/4"
Diaphragm Plate: Plated Steel	1-1/4" x 1-1/4"

Diaphragm: Nylon fabric reinforced Buna-N with full 26 in^2 effective area
Vent and Valve: Precision-fit polyethylene valve and seat, threaded 3/4" or 1" NPT
Operating Temperature: -20° F to 150° F (-28.9° C to 65.5° C)
Corrosion Protection: Cases dip primed chromate conversion coating, topcoat enamel
Internal Relief Valve: Set to relieve at approximately 7" w.c. above normal outlet pressure setting

Spring Ranges

Outlet Pressure Ranges	Spring Color	Spring Part Number
3½" to 6½" w.c.	Red	143-62-021-15
5" to 8½" w.c.	Blue	143-62-021-16
6" to 14" w.c.	Green	143-62-021-17
12" to 28" w.c.	Orange	143-62-021-18
½ psi to 2 psi	Black & White	143-62-021-22
½ psi to 3 psi	Cadmium*	173-62-021-02
2 to 6 psi	Black*	139-16-021-01

*For high pressure model 143-80-2HP

Orifice and Maximum Inlet Pressure

Orifice	Part Number	Pressure
⅛" aluminum	143-62-023-37	125 psig
3/16" aluminum	143-63-023-40	125 psig
¼" aluminum	143-62-023-42	60 psig
5/16" aluminum	143-62-023-43	40 psig
⅜" aluminum	143-62-023-44	40 psig
½" aluminum	143-62-023-45	20 psig
⅝" aluminum	143-62-023-46	10 psig

Relief Valve Performance: Lever blocked with valve disc in the wide open position

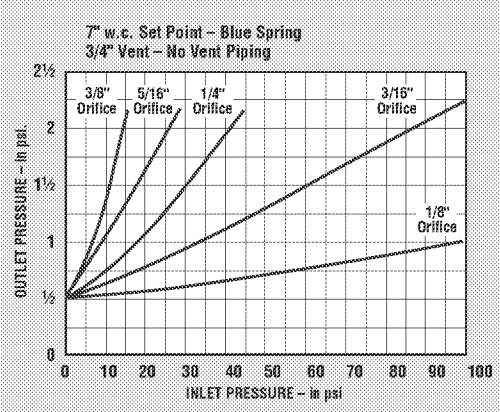

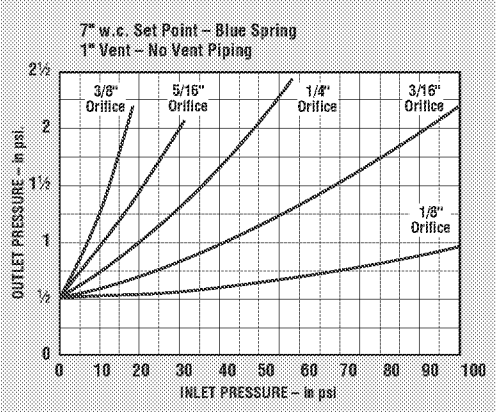

Maximum Emergency Pressure

The maximum pressure that the model 143-80-1, 143-80-2 and 143-80-2HP regulator inlets may be subjected under abnormal conditions without causing damage to the regulator is the stated Maximum Inlet Pressure + 50 psi

Note: For the Low Pressure Cut Off version model 143-80-6 it is Maximum Inlet Pressure + 10 psi. See bulletin TD-1301-L

The maximum pressure to which the 143-80 diaphragm case may be subjected under abnormal conditions without causing damage to the internal parts of the regulator is the set point + 3 psi. If the outlet pressure exceeds this pressure, the regulator must be removed from service and carefully inspected. Damaged or otherwise unsatisfactory parts must be replaced before returning the regulator to service. The maximum outlet pressure that can be safely contained in the 143-80 diaphragm case is 10 psi (safely means no leakage as well as no bursting).

Full Open Capacity

Use the following formula for the full open capacity:

1. $Q = K\sqrt{P_0(P_I - P_0)}$ .... (for $\frac{P_I}{P_0}$ less than 1.894)
2. $Q = \frac{KP_I}{2}$ ..... (for $\frac{P_I}{P_0}$ greater than 1.894)

Q = maximum capacity of the regulator (in SCFH of 0.6 specific gravity natural gas).
K = the "K" factor, the regulator constant from the table below.
P_I = absolute inlet pressure (psia).
P_0 = absolute outlet pressure (psia).

Orifice	⅝"	½"	⅜"	5/16"	¼"	3/16"	⅛"
K	820	520	292	206	132	74	33

SENSUS METERING SYSTEMS

THE GAS INDUSTRY

Capacities

Flow capacities in SCFH natural gas
(0.6 specific gravity – 14.65 psia – 60°F)

Capacities are based on the following maximum variations in outlet pressure:

Red and Blue Springs – 1" w.c. droop

Orange Spring – 3" w.c. droop

Green Spring – 2" w.c. droop

Black Spring – 10% droop

Note: The 1/2 psig, 1 psig and 2 psig inlet pressures apply only to Red and Blue springs.

Note: The last capacity figure in each column indicates the maximum capacity for each orifice at recommended pressure within the optimum performance range.

The performance data is based on normal testing at 70°F flowing temperature.

Changes in performance can occur at extreme low flowing temperatures.

Body Size 3/4" x 3/4"

Inlet	Orifice						
psig	1/8"	3/16"	1/4"	5/16"	3/8"	1/2"	5/8"
1/2	–	–	–	–	340	450	510
1	–	–	–	480	500	510	530
2	–	–	530	560	570	580	600
3	–	420	600	620	630	650	670
5	250	560	700	720	730	770	790
7.5	310	700	840	860	880	900	900
10	370	830	950	970	1000	1020	1020
20	530	1200	1220	1240	1250	1270	–
40	860	1570	1330	1340	1450	–	–
60	1200	1660	1520	–	–	–	–
80	1500	1710	–	–	–	–	–
125	1800	1900	–	–	–	–	–

Body Size 3/4" x 1" • 1" x 1"

Inlet	Orifice						
psig	1/8"	3/16"	1/4"	5/16"	3/8"	1/2"	5/8"
1/2	–	–	–	–	350	460	520
1	–	–	–	480	550	600	650
2	–	–	530	700	840	880	780
3	–	420	650	870	1000	920	810
5	250	580	890	1120	1160	950	970
7.5	310	700	1140	1340	1270	1140	1060
10	370	840	1360	1500	1330	1200	1180
20	530	1230	2000	1600	1480	1400	–
40	860	1700	2000	1640	1900	–	–
60	1200	1900	2000	–	–	–	–
80	1540	2000	–		–	–	–
125	2100	2100	–	–	–	–	–

Body Size 3/4" x 1-1/4" • 1" x 1-1/4" • 1-1/4" x 1-1/4"

Inlet	Orifice						
psig	1/8"	3/16"	1/4"	5/16"	3/8"	1/2"	5/8"
1/2	–	–	–	–	350	460	520
1	–	–	–	480	550	680	760
2	–	–	530	700	840	1020	1030
3	–	420	650	870	1030	1200	1050
5	250	580	890	1180	1350	1490	1060
7.5	310	700	1140	1500	1610	1580	1060
10	370	840	1360	1700	1710	1800	1180
20	630	1230	1600	1800	1900	1900	–
40	860	1800	2200	1900	2000	–	–
60	1200	2100	2400	–	–	–	–
80	1550	2200	–	–	–	–	–
125	2250	2400	–	–	–	–	–

Other Gases

143-80 Regulators are mainly used on natural gas. However, they perform equally well on LP gas, nitrogen, dry CO_2, air and others.

Other Gases	Correction Factor
Air (Specific Gravity 1.0)	0.77
Propane (Specific Gravity 1.53)	0.63
1350 BTU Propane Air Mix (1.20)	0.71
Nitrogen (Specific Gravity 0.97)	0.79
Dry Carbon Dioxide (Specific Gravity 1.52)	0.63

For other non corrosive gases:

$$\text{CORRECTION FACTOR} = \sqrt{\frac{0.6}{\text{Specific Gravity of the Gas}}}$$

Dimensions

Regulator	A	B	C	D	E	F
143-80	9 3/8"	1 5/16"	3 7/16"	6 7/8"	5 3/4"	1 31/32"

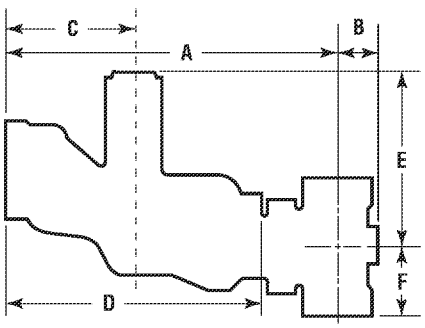

Mounting Positions

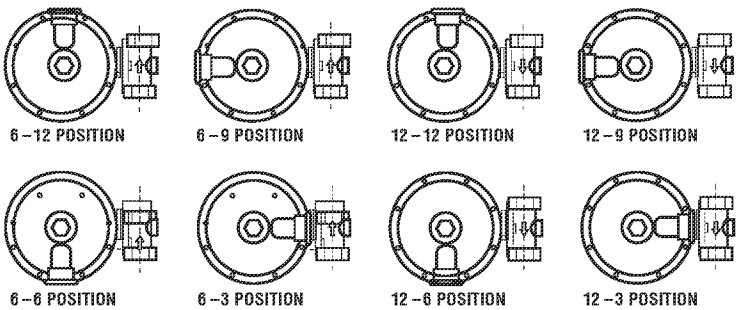

SENSUS METERING SYSTEMS
805 Liberty Boulevard
DuBois, PA 15801
800-375-8875
Fax: (814) 375-8460
www.sensus.com
(open "North America Gas")

© Sensus Metering Systems 2006

Made in USA
09-06-Becken 50M

Attachment 4: Engine Specifications

Ajax* E-565 Gas Engine
Simple, Rugged, Dependable

Reliable and Continuous Service from a Proven, Sturdy Engine

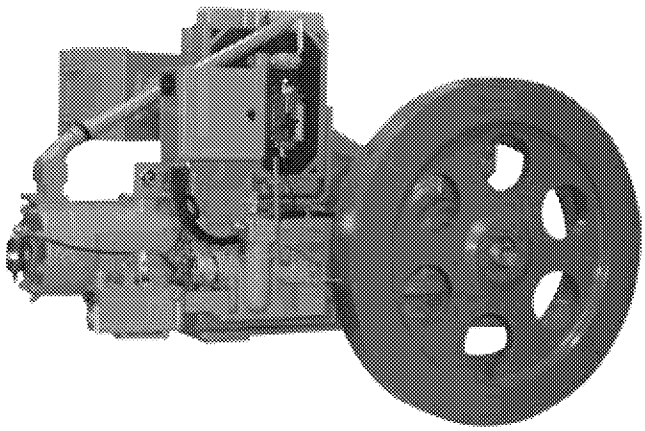

GE Oil & Gas' Ajax E-565 Gas Engine offers less maintenance, lower field costs and a proven, rugged design. The standard single-cylinder, two-stroke, clean-burning engine meets current federal emission regulations without additional control systems.

Pumping units require smooth, continuous, stable power to reduce shock to the rod string. Ajax E-565 engines have supplied such power in adverse climates and under continuous load in oil fields all over the world. Capable of operating on a wide range of field gas – including both high and low BTU – the Ajax E-565 is a simple, reliable solution for continuous oilfield operation.

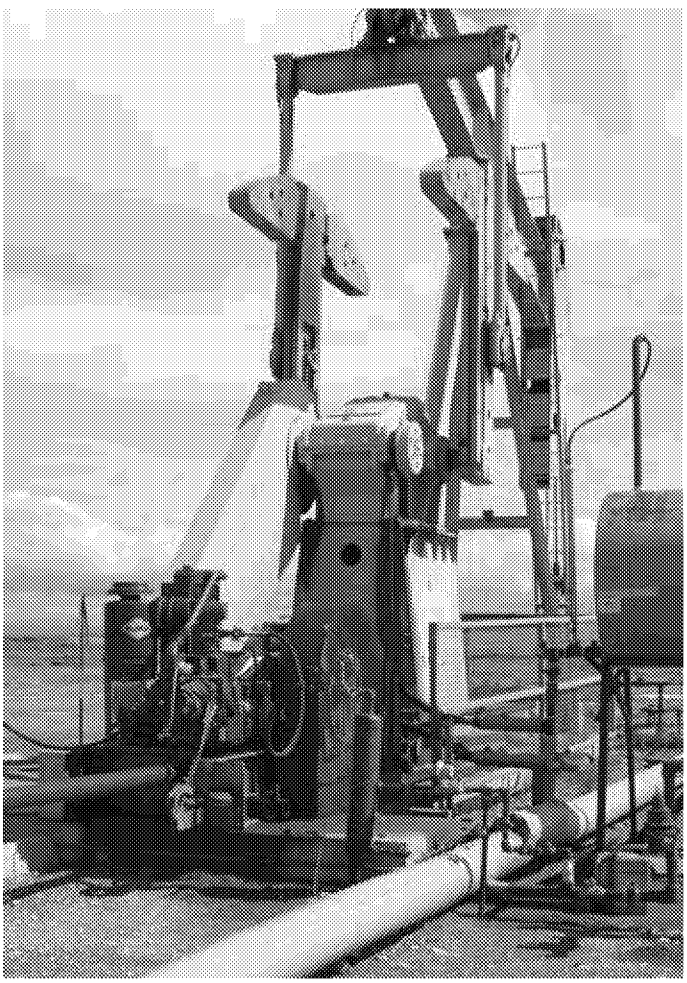

Ajax E-565 Gas Engine Specifications

Rated Continuous BHP at 100° F (38° C) ambient	40 hp (29.8 kW)
Rated RPM	525
Bore x Stroke	8-1/2" x 10" (216 mm x 254 mm)
Piston Displacement	567 in³ (9.29 l)
Rated Piston Speed	875 ft/min (267 m/min)
Weight (including flywheel)	4716 lb (2139 kg)
BMEP	53.6 psi (3.67 kg/cm²)
Compression Ratio	6:1
Torque	400 ft-lb (542 N•m)
Thermo-syphon Cooling System	
Capacity	28 qt (26.50 l)
Lubrication System	
Lubricator Capacity	2 qt (1.89 l)
Crankcase Oil Capacity	9 qt (8.52 l)
Flywheel	
Outside Diameters	48" (1219.20 mm)
Weight	1500 lb (681.00 kg)
Single-plate Clutch Power Takeoff	
Plate Diameter	14" (355.60 mm)
Shaft Diameter x Length	3" x 8-1/2" (76.20 mm x 215.90 mm)
Keyway Width x Depth	3/4" x 3/8" (19.05 mm x 9.53 mm)
Piping Sizes	
Exhaust Pipe Diameter	4" (101.60 mm)
Gas Connection Size	1" (25.40 mm)

Ajax Dependability

The Ajax E-565 engine was designed with high-quality standards that our customers expect. The standard waterproof Altronic ignition is gear-driven from the layshaft, and the single-plate clutch power takeoff provides extended service life. The Ajax E-565 lubrication system is mechanically force-fed to the cylinder wall and splashed to the crankshaft, gears and crosshead, reducing the maintenance required and providing lower cost over the life of the engine.

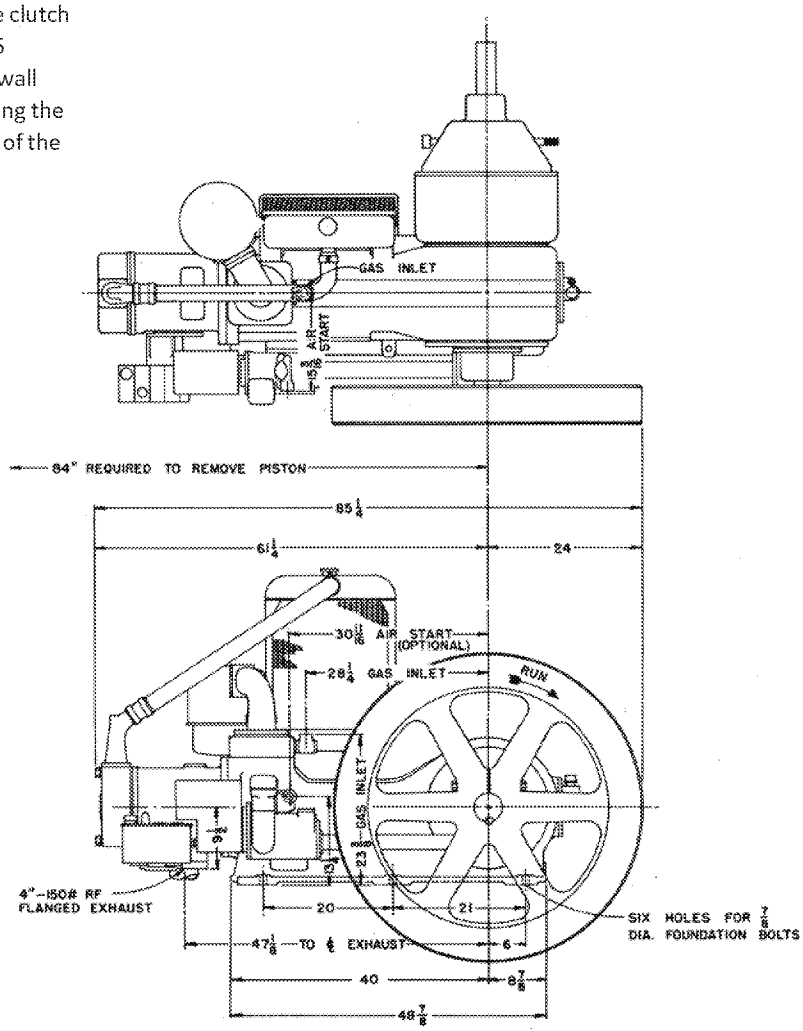

Standard Features

- Altronic I ignition system (waterproof)
- Dry-type air cleaner
- Electric ring gear start, 12 v
- Low-pressure fuel system
- Flywheel guard
- Fuel shut-off valve

Control Panel Features

- Overspeed shutdown (electric)
- Crankcase oil level shutdown
- Jacket water temperature gauge shutdown
- Lubricator oil level shutdown
- Run/stop switch
- Spare input with indication

Optional Features

- Gas injection fuel system (hydraulic)
- Muffler
- Exhaust line
- Shielded ignition
- Air-starting system
- Fuel volume tank, single or double compartment
- Oil day tank with stand, 30 gal (113 l)

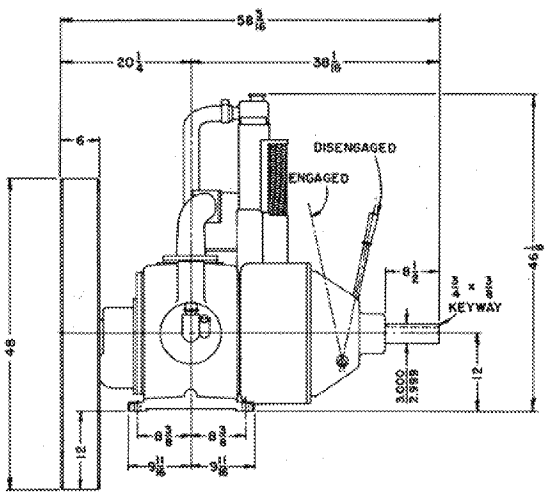

GE Oil & Gas
2101 S.E. 18th Street
Oklahoma City, OK 73129
+1 405 670 4121

24/7 customer support: +1 866 754 3562
geoilandgas.com

© 2014 General Electric Company. All rights resvered.
GEA31204 (11/2014)

GE Oil & Gas

Reciprocating Compression

Estimated Exhaust Emissions Based On PLQNG, 1500 FASL Elevation and an average Ambient Temperature of 65 Degrees F

For Emissions Permits, please contact Ajax for emissions data based on specific site conditions

Ajax Engine Model	Emissions (Gm / Bhph)						BSFC	RPM	BHP	BMEP	Exhaust Stack						No. Of Cyl's	Bore	Stroke
	NOx	CO	NMHC	VOC	H2CO	CO2					Dia. (in.)	Height (in.)	Temp (Deg.F)	Flow (acfm)	Flow (lb/m)	Velocity (ft/m)			
EA-15	4.4	3.3	0.7	0.5	0.3	581	9900	900	14	49.6	4	31	500	140	5	1604	1	5	6.5
EA-22	4.4	3.3	0.7	0.5	0.3	581	9900	650	21	48.5	5	64	500	200	8	1467	1	6.5	8
EA-30	4.4	3.3	0.7	0.5	0.3	580	9900	650	29	53.1	5	80	500	250	10	1833	1	7.25	8
C-30	4.4	3.3	0.7	0.5	0.3	552	9400	525	29	49.2	5	101	450	260	11	1907	1	7.5	10
C-42 Fuel Injected	4.4	3.3	0.7	0.5	0.3	580	9900	525	40	53.6	6	137	565	380	14	1935	1	8.5	10
E-42 Fuel Injected	4.4	3.3	0.7	0.5	0.3	580	9900	525	40	53.6	6	137	565	380	14	1935	1	8.5	10
E-565 Mixer Manifold	2.6	1.8	2.2	1.0	0.3	775	13300	525	40	53.2	6	137	565	380	14	1935	1	8.5	10
DP-60	4.4	1.7	0.6	0.5	0.3	528	9000	475	58	56.5	8	150	540	500	18	1432	1	9.5	12
DP-80	4.4	2.8	0.7	0.5	0.3	522	8900	400	77	57.1	10	164	470	610	24	1118	1	11.0	14
DP-81	6.6	1.1	0.5	0.5	0.3	499	8500	475	78	62.4	10	164	545	610	22	1118	1	10.5	12
DP-115	4.4	2.4	0.9	0.6	0.3	528	9000	360	110	55.0	12	190	440	880	36	1120	1	13.25	16
DP-125	5.0	2.7	0.8	0.6	0.3	499	8500	380	120	56.7	12	190	470	960	38	1222	1	13.25	16
DP-160	4.4	2.8	0.7	0.5	0.3	522	8900	400	154	57.1	10	164	470	1220	48	2237	2	11	14
DP-165	6.0	3.0	0.8	0.6	0.3	499	8500	380	158	58.4	13.25	260	450	1210	49	1264	1	15	16
DP-230	4.4	2.4	0.9	0.6	0.3	528	9000	360	221	55.0	12	190	440	1770	72	2254	2	13.25	16
DP-250	5.5	3.0	0.8	0.6	0.3	499	8500	380	240	56.7	12	190	460	1910	76	2432	2	13.25	16
DP-325	5.5	1.7	0.8	0.6	0.3	493	8400	380	312	57.5	13.25	260	450	2420	98	2527	2	15	16
DPC-60	4.4	1.7	0.6	0.5	0.3	528	9000	475	58	56.5	8	150	540	500	18	1432	1	9.5	12
DPC-80	4.4	2.8	0.7	0.5	0.3	522	8900	400	77	57.1	10	164	470	610	24	1118	1	11	14
DPC-81	6.6	1.1	0.5	0.5	0.3	498	8500	475	78	62.4	10	164	545	610	22	1118	1	10.5	12
DPC-105	4.4	2.8	0.6	0.5	0.3	516	8800	425	101	59.3	12	193	480	780	31	993	1	12	14
DPC-115	4.4	2.4	0.9	0.6	0.3	510	8700	360	110	55.0	12	190	440	870	36	1108	1	13.25	16
DPC-115 LE	2.0	2.2	0.7	0.5	0.3	476	8100	360	110	55.0	12	190	400	830	36	1057	1	13.25	16
DPC-120	5.5	1.7	0.6	0.5	0.3	528	9000	475	115	56.5	8	150	540	1000	37	2865	2	9.5	12
DPC-140	10.5	1.3	0.6	0.5	0.3	481	8200	400	134	60.3	12	190	490	1040	40	1324	1	13.25	16
DPC-140 LE	2.0	1.4	0.6	0.5	0.3	458	7800	400	134	60.3	12	190	450	1010	41	1286	1	13.25	16
DPC-160	4.4	2.7	0.7	0.5	0.3	522	8900	400	154	57.1	10	164	470	1220	48	2237	2	11	14
DPC-162	6.6	1.1	0.5	0.5	0.3	498	8500	475	156	62.4	10	164	545	1230	45	2255	2	10.5	12
DPC-180	6.3	1.4	0.9	0.6	0.3	493	8400	400	173	60.5	13.25	256	460	1290	52	1347	1	15	16
DPC-180 LE	2.0	1.1	0.6	0.5	0.3	464	7900	400	173	60.5	13.25	256	555	1450	53	1514	1	15	16

Site Altitude = 0 - 1500 FASL Date: April 2012

FASL = Feet Above Sea Level

Site Fuel Composition = Pipeline Quality Natural Gas (PLQNG)

Ambient Temp For Defining Maximum Load = 100 Deg F

Ambient Temp For Defining Exhaust Emissions = 65 Deg F

Gm / Bhph = Gram / Brake Horse Power-Hour

NOx = Nitrogen Oxide as NO2

H2CO = Formaldehyde

NMHC= Non-Methane Hydrocarbons reported as Propane

VOC = Non-Methane, Non-Ethane & Non-Formaldehyde reported as Propane

BSFC = Brake Specific Fuel Consumption (Btu / Bhp-hr)

CO = Carbon Monoxide

ACFM = Actual Cubic Feet Per Minute

BMEP = Brake Mean Effective Pressure (Psi)

The above emissions and performance data is contingent on:

1.) Engine must be maintained in good working order.

2.) Engine modifications or upgrades must meet Ajax specifications and installation guidelines.

3.) Engine operating parameters must be consistent with those specified in the Ajax manual.

"LE" stands for Low Emissions (PreChamber version of the Ajax engine)

For additional information, please contact Application Engineering at (405) 670-4121

GE Oil & Gas, Reciprocating Compression, 2101 SE 18th Street Oklahoma City, OK USA

Fuel Composition (PLQNG):

Compound	Formula	% Volume
Nitrogen	N2	0.72
Carbon Dioxide	CO2	1.14
Methane	CH4	92.84
Ethane	C2H6	4.10
Propane	C3H8	1.20
	Total Volume % =	100.00

GE Oil & Gas

Reciprocating Compression

Estimated Exhaust Emissions Based On PLQNG, 1500 FASL Elevation and an average Ambient Temperature of 65 Degrees F

For Emissions Permits, please contact Ajax for emissions data based on specific site conditions

Ajax Engine Model	Emissions (Gm / Bhph)						BSFC	RPM	BHP	BMEP	Exhaust Stack						No. Of Cyl's	Bore	Stroke
	NOx	CO	NMHC	VOC	H2CO	CO2					Dia. (in.)	Height (in.)	Temp (Deg.F)	Flow (acfm)	Flow (lb/m)	Velocity (ft/m)			
DPC-230	4.4	2.4	0.9	0.6	0.3	510	8700	360	221	55.0	12	190	440	1730	71	2203	2	13.25	16
DPC-230 LE	2.0	2.2	0.7	0.5	0.3	476	8100	360	221	55.0	12	190	400	1670	72	2126	2	13.25	16
DPC-280	11.4	1.3	0.6	0.5	0.3	481	8200	400	269	60.3	12	190	470	2030	80	2585	2	13.25	16
DPC-280 LE	2.0	1.4	0.6	0.5	0.3	458	7800	400	269	60.3	12	190	450	1990	81	2534	2	13.25	16
DPC-300	4.1	1.9	1.0	0.6	0.3	510	8700	360	288	56.0	13.25	260	435	2210	91	2308	2	15	16
DPC-300 LE	2.0	1.6	0.7	0.5	0.3	482	8200	360	288	56.0	13.25	260	435	2230	92	2329	2	15	16
DPC-360	6.3	1.4	0.9	0.6	0.3	493	8400	400	346	60.5	13.25	260	480	2630	103	2747	2	15	16
DPC-360 LE	2.0	1.1	0.6	0.5	0.3	464	7900	400	346	60.5	13.25	260	480	2690	105	2809	2	15	16
DPC-450 LE	2.7	1.2	0.6	0.5	0.3	458	7800	400	432	64.6	17.25	190	500	3220	124	1984	3	13.25	16
DPC-540	8.6	1.3	0.8	0.6	0.3	487	8300	400	540	63.0	17.25	303	465	3890	155	2397	3	15	16
DPC-540 LE	2.0	1.0	0.6	0.5	0.3	458	7800	400	540	63.0	17.25	303	465	3970	158	2446	3	15	16
DPC-600	13.0	1.2	0.7	0.5	0.3	480	8200	400	576	67.2	17.25	303	515	4110	155	2532	3	15	16
DPC-600 LE	6.5	0.9	0.6	0.5	0.3	458	7800	400	576	67.2	17.25	303	515	4190	158	2582	3	15	16
DPC-720	9.5	1.3	0.7	0.5	0.3	487	8300	400	720	63.0	17.25	241	465	5190	207	3198	4	15	16
DPC-720 LE	2.0	1.0	0.6	0.5	0.3	458	7800	400	720	63.0	17.25	241	465	5300	211	3266	4	15	16
DPC-800	13.0	1.2	0.7	0.5	0.3	480	8200	400	768	67.2	17.25	241	515	5480	207	3377	4	15	16
DPC-800 LE	6.5	1.0	0.6	0.5	0.3	458	7800	400	768	67.2	17.25	241	515	5590	211	3444	4	15	16
DPC-2201	10.0	1.3	0.6	0.5	0.3	470	8000	440	148	60.4	12	190	490	1160	45	1477	1	13.25	16
DPC-2201 LE	2.0	1.4	0.6	0.5	0.3	458	7800	440	148	60.4	12	190	490	1200	47	1528	1	13.25	16
DPC-2202	10.0	1.3	0.6	0.5	0.3	470	8000	440	296	60.4	12	190	470	2280	90	2903	2	13.25	16
DPC-2202 LE	2.0	1.4	0.6	0.5	0.3	458	7800	440	296	60.4	12	190	470	2350	93	2992	2	13.25	16
DPC-2801	5.5	1.4	0.8	0.5	0.3	481	8200	440	192	61.1	13.25	256	460	1450	58	1514	1	15	16
DPC-2801 LE	2.0	1.2	0.6	0.5	0.3	458	7800	440	192	61.1	13.25	256	460	1490	60	1556	1	15	16
DPC-2802	5.5	1.3	0.8	0.5	0.3	477	8200	440	422	67.2	13.25	260	465	2910	116	3039	2	15	16
DPC-2802 LE	2.0	1.2	0.6	0.5	0.3	458	7800	440	384	61.1	13.25	260	465	3000	119	3133	2	15	16
DPC-2802 LE*	2.0	1.2	0.6	0.5	0.3	458	7800	440	384	61.1	14.13	260	465	3000	119	2757	2	15	16
DPC-2803	12.0	1.2	0.8	0.5	0.3	469	8000	440	634	67.3	17.25	303	465	4380	174	2699	3	15	16
DPC-2803 LE	2.0	1.2	0.6	0.5	0.3	458	7800	440	600	63.7	17.25	241	515	4740	179	2921	3	15	16
DPC-2804	12.0	1.2	0.8	0.5	0.3	469	8000	440	845	67.2	17.25	241	465	5840	233	3598	4	15	16
DPC-2804 LE	2.0	1.2	0.6	0.5	0.3	458	7800	440	800	63.7	17.25	241	515	6320	239	3894	4	15	16

Site Altitude = 0 - 1500 FASL Date: April 2012

FASL = Feet Above Sea Level

Site Fuel Composition = Pipeline Quality Natural Gas (PLQNG)

Ambient Temp For Defining Maximum Load = 100 Deg F

Ambient Temp For Defining Exhaust Emissions = 65 Deg F

Gm / Bhph = Gram / Brake Horse Power-Hour

NOx = Nitrogen Oxide as NO2

H2CO = Formaldehyde

NMHC= Non-Methane Hydrocarbons reported as Propane

VOC = Non-Methane, Non-Ethane & Non-Formaldehyde reported as Propane

BSFC = Brake Specific Fuel Consumption (Btu / Bhp-hr)

CO = Carbon Monoxide

* = DPC-2802LE Tilt Muffler

ACFM = Actual Cubic Feet Per Minute

BMEP = Brake Mean Effective Pressure (Psi)

The above emissions and performance data is contingent on:

1.) Engine must be maintained in good working order.

2.) Engine modifications or upgrades must meet Ajax specifications and installation guidelines.

3.) Engine operating parameters must be consistent with those specified in the Ajax manual.

"LE" stands for Low Emissions (PreChamber version of the Ajax engine)

Fuel Composition (PLQNG):

Compound	Formula	% Volume
Nitrogen	N2	0.72
Carbon Dioxide	CO2	1.14
Methane	CH4	92.84
Ethane	C2H6	4.10
Propane	C3H8	1.20
	Total Volume % =	100.00

For additional information, please contact Application Engineering at (405) 670-4121

GE Oil & Gas, Reciprocating Compression, 2101 SE 18th Street Oklahoma City, OK USA