EPA Form No. 5900-391
EPA ICR No. 1230.27
OMB Control No. 2060-0003
Approval expires 4/30/2017

United States Environmental Protection Agency
https://www.epa.gov/tribal-air/tribal-minor-new-source-review
January 4, 2017

Part 2: Submit Within 60 Days After Startup of Production -- Emission and Production Information

FEDERAL IMPLEMENTATION PLAN FOR TRUE MINOR SOURCES IN INDIAN COUNTRY IN THE OIL AND NATURAL GAS PRODUCTION AND NATURAL GAS PROCESSING SEGMENTS OF THE OIL AND NATURAL GAS SECTOR

Registration for New True Minor Oil and Natural Gas Sources and Minor Modifications at Existing True Minor Oil and Natural Gas Sources

Please submit information to:

[Reviewing Authority Address Phone]	Air Program, Mail Code 8P-AR US Environmental Protection Agency Region 8 1595 Wynkoop Street Denver, Colorado 80202

A. GENERAL SOURCE INFORMATION (See Instructions Below)

1. Company Name Crescent Point Energy U.S. Corp		**2. Source Name** Ute Tribal 4-23-3-1W-H1	
3. Type of Oil and Natural Gas Operation Oil Wellsite		**4. New Minor Source?** ☐ Yes ☒ No **5. True Source Modification?** ☒ Yes ☐ No	
6. NAICS Code 211111		**7. SIC Code** 1311	
8. U.S. Well ID(s) or API Number(s) [if applicable] 43047538180000			
9. Area of Indian Country Uintah and Ouray	**10. County** Uintah	**11a. Latitude** 40.21311104	**11b. Longitude** -109.9702187

ED_004016P_00012919-00001

B. CONTACT INFORMATION (See Instructions Below)

1. Owner Name Crescent Point Energy U.S. Corp	Title N/A
Mailing Address 555 17th St, Suite 1800, Denver, CO 80202	
Email Address jmcqueen@crescentpointenergy.com	
Telephone Number (720) 880-3610	Facsimile Number (303)292-1562
2. Operator Name (if different from owner) Crescent Point Energy U.S. Corp	Title
Mailing Address 555 17th St, Suite 1800, Denver, CO 80202	
Email Address jmcqueen@crescentpointenergy.com	
Telephone Number (720) 880-3610	Facsimile Number (303)292-1562
3. Source Contact Jennifer McQueen	Title Air Quality Specialist
Mailing Address 555 17th St, Suite 1800, Denver, CO 80202	
Email Address jmcqueen@crescentpointenergy.com	
Telephone Number (303) 308-6285	Facsimile Number (303)292-1562

4. Compliance Contact	Title
Jennifer McQueen	Air Quality Specialist
Mailing Address	
555 17th St, Suite 1800, Denver, CO 80202	
Email Address	
jmcqueen@crescentpointenergy.com	
Telephone Number	Facsimile Number
(303) 308-6285	(303)292-1562

C. EMISSIONS AND OTHER SOURCE INFORMATION

Include all of the following information in the table below and as attachments to this form:

Note: The emission estimates can be based upon actual test data or, in the absence of such data, upon procedures acceptable to the Reviewing Authority. The following procedures are generally acceptable for estimating emissions from air pollution sources: (1) unit-specific emission tests; (2) mass balance calculations; (3) published, verifiable emission factors that are applicable to the unit (i.e., manufacturer specifications); (4) other engineering calculations; or (5) other procedures to estimate emissions specifically approved by the Reviewing Authority. Guidance for estimating emissions can be found at https://www.epa.gov/chief.

[X] Narrative description of the operations.

[X] Identification and description of any air pollution control equipment and compliance monitoring devices or activities.

[X] Type and actual amount (annually) of each fuel that will be used.

[X] Type of raw materials used (e.g., water for hydraulic fracturing).

[X] Actual, annual production rates.

[X] Actual operating schedules.

[X] Any existing limitations on source operations affecting emissions or any work practice standards, where applicable, for all regulated New Source Review (NSR) pollutants at your source. Indicate all requirements referenced in the Federal Implementation Plan (FIP) for True Minor Sources in Indian Country in the Oil and Natural Gas Production and Natural Gas Processing Segments of the Oil and Natural Gas Sector that apply to emissions units and air pollution generating activities at the source or proposed. Include statements indicating each emissions unit that is an emissions unit potentially subject to the requirements referenced in the FIP, but does not meet the definition of an affected facility under the referenced requirement, and therefore, is not subject to those requirements.

[X] For each emissions unit comprising the new source or modification, estimates of the total allowable (potential to emit) annual emissions at startup of production from the air pollution source for the following air pollutants: particulate matter, PM_{10}, $PM_{2.5}$, sulfur oxides ( ), nitrogen oxides (NO_x), carbon monoxide (CO), volatile organic compound (VOC), lead (Pb) and lead compounds, fluorides (gaseous and particulate), sulfuric acid mist (H_2SO_4), hydrogen sulfide (H_2S), total reduced sulfur (TRS) and reduced sulfur compounds, including all calculations for the estimates. Allowable annual emissions are defined as: emissions rate of an emissions unit calculated using the maximum capacity of a stationary source to emit a pollutant under its physical and operational design. Any physical

or operational limitation on the capacity of the source to emit a pollutant, including air pollution control equipment and restrictions on hours of operation or on the type or amount of material combusted, stored, or processed, shall be treated as part of its design if the limitation, or the effect it would have on emissions, is legally and practically enforceable. You must determine the potential for emissions within 30 days from the startup of production.

[X] For each emissions unit comprising the new source or modification, estimates of the total actual annual emissions during the upcoming, consecutive 12 months from the air pollution source for the following air pollutants: particulate matter (PM, PM_{10}, $PM_{2.5}$), sulfur oxides (SO_x), nitrogen oxides (NOx), carbon monoxide (CO), volatile organic compound (VOC), lead (Pb) and lead compounds, ammonia (NH_3), fluorides (gaseous and particulate), sulfuric acid mist (H_2SO_4), hydrogen sulfide (H_2S), total reduced sulfur (TRS) and reduced sulfur compounds, including all calculations for the estimates. Estimates of actual emissions must take into account equipment, operating conditions, and air pollution control measures. You should calculate an estimate of the actual annual emissions using estimated operating hours, production rates, in-place control equipment, and types of materials processed, stored, or combusted.

D. TABLE OF ESTIMATED EMISSIONS

Provide in the table below estimates of the total allowable annual emissions in tons per year (tpy) and total actual annual emissions (tpy) for the following pollutants for all emissions units comprising the new source or modification.

POLLUTANT	TOTAL ALLOWABLE ANNUAL EMISSIONS (TPY)	TOTAL ACTUAL ANNUAL EMISSIONS (TPY)
PM	0.38	0.38
PM_{10}	0.24	0.24
$PM_{2.5}$	0.24	0.24
SO_x	n/a	n/a
NO_x	6.06	6.06
CO	11.24	11.23
VOC	98.43	13.29
Pb	None	None

POLLUTANT	TOTAL ALLOWABLE ANNUAL EMISSIONS (TPY)	TOTAL ACTUAL ANNUAL EMISSIONS (TPY)
NH3	None	None
Fluorides	None	None
H_2SO_4	None	None
H_2S	None	None
TRS	None	None

ATTACHMENT A

PLOT PLAN

Figure 2 - Plot Plan
Ute Tribal 4-23-3-1W-H1
Uintah County, Utah
NWNW Sec 23 T3S R1W

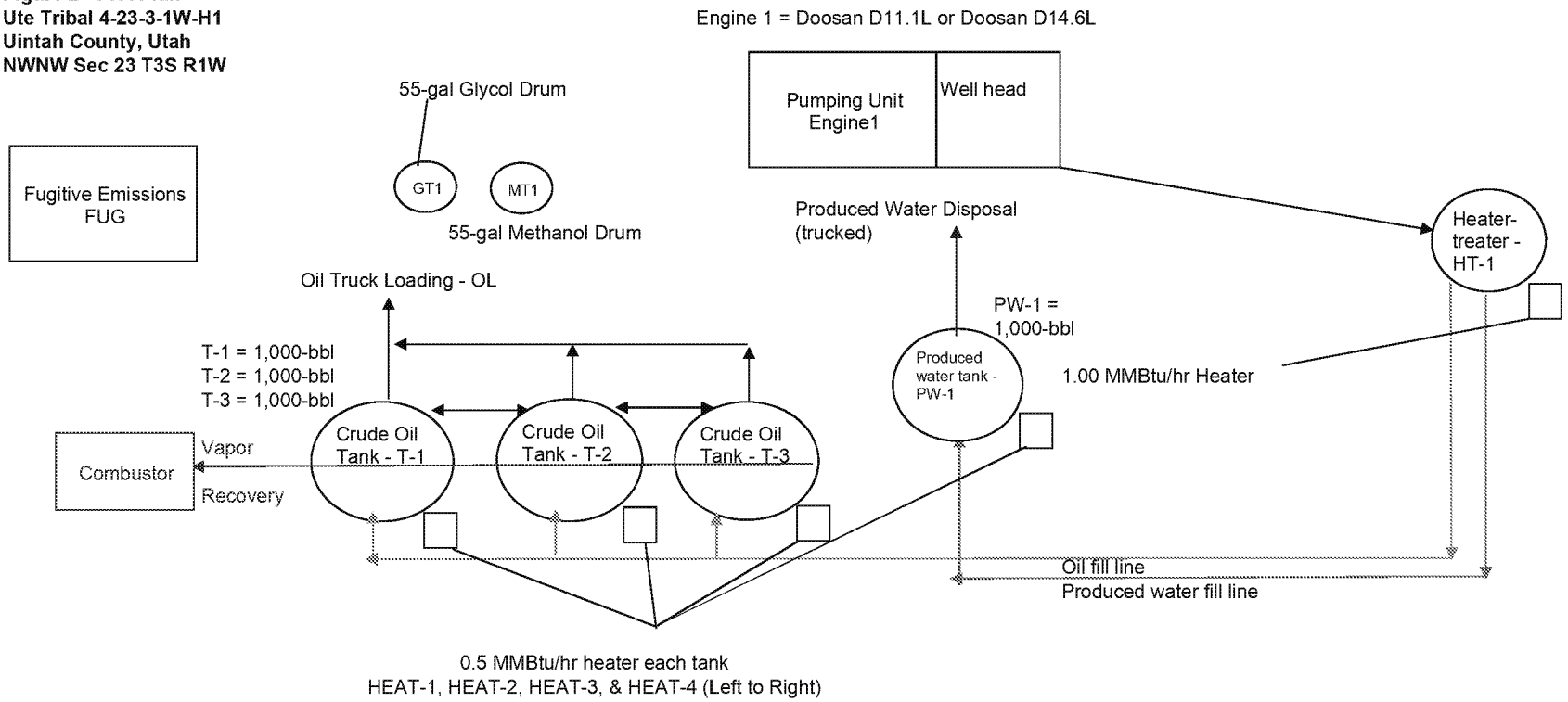

ATTACHMENT B

OIL AND GAS COMPOSITION ANALYSES

TECHNOLOGY LABORATORY, INC.

CENTRE PROFESSIONAL OFFICE PARK
1012 Centre Avenue
Fort Collins, Colorado 80526
(970) 490-1414

CERTIFICATE OF ANALYSIS

Antea
1343 S. Garfield Ave
Loveland, CO 80537

Date Sampled: 1/7/2014 & 1/8/2014
Date Received: 1/10/2014
Date Analyzed: 2/7/2014

Laboratory ID: A9660
Field Location: Crescent Point Roosevelt, UT (NGL)

Matrix: Oil

Laboratory ID:	Sample Name:	RVP psi @100°F	Vapor Pressure psi @145°F	API Gravity @60°F	Density 60/60	Avg MW estimated
A9660-47	Womack Daddy 3-16-3-IE A	0.18	3.2	25.6	0.901	600
A9660-49	Womack 3-83-IE A	0.20	1.0	32.8	0.861	600
A9660-51	Ute Energy 7-27-8-IE A	0.18	1.2	34.1	0.854	600
A9660-54	ULT 15-34-3-IE A	0.24	2.0	31.1	0.87	600
A9660-56	Coleman Tribal 13-8-4-2E A	0.42	0.9	31.7	0.861	600
A9660-61	Deep Creek Solo 5-16-4-2E	0.39	2.2	30.9	0.855	600
A9660-58	ULT 12-6-4-2E A	0.18	1.6	33.0	0.86	600
A9660-62	Ute Tribal 15-32-3-2E A	0.26	1.9	32.9	0.861	600
A9660-64	Deep Creek 2-30-3-2E A	0.25	2.1	33.6	0.857	600
A9660-66	Coleman Tribal 7-8-4-2E A	0.20	1.2	33.7	0.857	600
A9660-68	ULT 16-36-3-1E A	0.23	0.5	33.9	0.856	600
A9660-70	ULT 16-26-3-1E A	0.10	1.7	32.6	0.862	600
A9660-72	Ouray Valley Federal 3-41 A	0.24	0.9	30.3	0.875	600
A9660-74	Federal 14-19-6-21	0.19	2.1	28.1	0.887	600
A9660-76	Gose 3-18-6-21 A	0.21	1.1	29.4	0.879	600

FESCO, Ltd.
1100 Fesco Ave. - Alice, Texas 78332

For: Ute Energy Upstream Holdings
P. O. Box 789
Fort Duchesne, Utah 84026

Sample: Ute Tribal 1-5-4-2E
Gas Evolved From Hydrocarbon Liquid Flashed
From 30 psig & 160 °F to 0 psig & 70 °F

Date Sampled: 11/02/2011 Job Number: 16137.001

CHROMATOGRAPH EXTENDED ANALYSIS - SUMMATION REPORT

COMPONENT	MOL%	GPM
Hydrogen Sulfide*	< 0.001	
Nitrogen	3.241	
Carbon Dioxide	0.400	
Methane	14.294	
Ethane	17.218	4.579
Propane	29.085	7.967
Isobutane	6.454	2.100
n-Butane	13.604	4.264
2-2 Dimethylpropane	0.070	0.027
Isopentane	4.672	1.699
n-Pentane	4.671	1.684
Hexanes	3.848	1.579
Heptanes Plus	2.443	0.978
Totals	100.000	24.876

Computed Real Characteristics Of Heptanes Plus:

Specific Gravity	3.339	(Air=1)
Molecular Weight	94.85	
Gross Heating Value	4945	BTU/CF

Computed Real Characteristics Of Total Sample:

Specific Gravity	1.599	(Air=1)
Compressibility (Z)	0.9807	
Molecular Weight	45.41	
Gross Heating Value		
Dry Basis	2557	BTU/CF
Saturated Basis	2513	BTU/CF

*Hydrogen Sulfide tested in laboratory by Stained Tube Method (GPA 2377)
Results: 0.252 Gr/100 CF, 4.0 PPMV or 0.0004 Mol %

Base Conditions: 14.650 PSI & 60 Deg F

Certified: FESCO, Ltd. - Alice, Texas

Analyst: TJ
Processor: FC
Cylinder ID: FL-12s

David Dannhaus 361-661-7015

CHROMATOGRAPH EXTENDED ANALYSIS
TOTAL REPORT

COMPONENT	MOL %	GPM	WT %
Hydrogen Sulfide*	< 0.001		< 0.001
Nitrogen	3.241		1.999
Carbon Dioxide	0.400		0.388
Methane	14.294		5.049
Ethane	17.218	4.579	11.402
Propane	29.085	7.967	28.244
Isobutane	6.454	2.100	8.261
n-Butane	13.604	4.264	17.413
2,2 Dimethylpropane	0.070	0.027	0.111
Isopentane	4.672	1.699	7.423
n-Pentane	4.671	1.684	7.422
2,2 Dimethylbutane	0.021	0.009	0.040
Cyclopentane	0.339	0.141	0.524
2,3 Dimethylbutane	0.070	0.029	0.133
2 Methylpentane	1.270	0.524	2.410
3 Methylpentane	0.589	0.239	1.118
n-Hexane	1.559	0.637	2.959
Methylcyclopentane	0.537	0.184	0.995
Benzene	0.078	0.022	0.134
Cyclohexane	0.341	0.115	0.632
2-Methylhexane	0.116	0.054	0.256
3-Methylhexane	0.139	0.063	0.307
2,2,4 Trimethylpentane	0.000	0.000	0.000
Other C7's	0.390	0.169	0.852
n-Heptane	0.284	0.130	0.627
Methylcyclohexane	0.196	0.078	0.424
Toluene	0.059	0.020	0.120
Other C8's	0.207	0.096	0.502
n-Octane	0.029	0.015	0.073
Ethylbenzene	0.003	0.001	0.007
M & P Xylenes	0.011	0.004	0.026
O-Xylene	0.002	0.001	0.005
Other C9's	0.042	0.021	0.117
n-Nonane	0.003	0.002	0.008
Other C10's	0.005	0.003	0.016
n-Decane	0.001	0.001	0.003
Undecanes (11)	0.000	0.000	0.000
Totals	100.000	24.876	100.000

Computed Real Characteristics Of Total Sample:

Specific Gravity	1.599	(Air=1)
Compressibility (Z)	0.9807	
Molecular Weight	45.41	
Gross Heating Value		
Dry Basis	2557	BTU/CF
Saturated Basis	2513	BTU/CF

FESCO, Ltd.
1100 Fesco Ave. - Alice, Texas 78332

For: Ute Energy Upstream Holdings
P. O. Box 789
Fort Duchesne, Utah 84026

Sample: Ute Tribal 1-5-4-2E
Gas Evolved From Hydrocarbon Liquid Flashed
From 46 psig & 155 °F to 0 psig & 70 °F

Date Sampled: 11/02/2011 Job Number: 16136.001

CHROMATOGRAPH EXTENDED ANALYSIS - SUMMATION REPORT

COMPONENT	MOL%	GPM
Hydrogen Sulfide*	0.001	
Nitrogen	0.557	
Carbon Dioxide	0.659	
Methane	39.329	
Ethane	17.201	4.574
Propane	19.937	5.461
Isobutane	3.856	1.255
n-Butane	8.864	2.779
2-2 Dimethylpropane	0.049	0.019
Isopentane	2.745	0.998
n-Pentane	2.971	1.071
Hexanes	2.041	0.838
Heptanes Plus	1.790	0.736
Totals	100.000	17.730

Computed Real Characteristics Of Heptanes Plus:

Specific Gravity	3.402	(Air=1)
Molecular Weight	97.37	
Gross Heating Value	5085	BTU/CF

Computed Real Characteristics Of Total Sample:

Specific Gravity	1.249	(Air=1)
Compressibility (Z)	0.9882	
Molecular Weight	35.74	
Gross Heating Value		
Dry Basis	2055	BTU/CF
Saturated Basis	2020	BTU/CF

*Hydrogen Sulfide tested in laboratory by Stained Tube Method (GPA 2377)
Results: 0.377 Gr/100 CF, 6.0 PPMV or 0.001 Mol %

Base Conditions: 14.650 PSI & 60 Deg F

Certified: FESCO, Ltd. - Alice, Texas

Analyst: TJ
Processor: FC
Cylinder ID: FL-15

David Dannhaus 361-661-7015

CHROMATOGRAPH EXTENDED ANALYSIS
TOTAL REPORT

COMPONENT	MOL %	GPM	WT %
Hydrogen Sulfide*	0.001		0.001
Nitrogen	0.557		0.437
Carbon Dioxide	0.659		0.812
Methane	39.329		17.652
Ethane	17.201	4.574	14.473
Propane	19.937	5.461	24.600
Isobutane	3.856	1.255	6.271
n-Butane	8.864	2.779	14.416
2,2 Dimethylpropane	0.049	0.019	0.099
Isopentane	2.745	0.998	5.542
n-Pentane	2.971	1.071	5.998
2,2 Dimethylbutane	0.016	0.007	0.039
Cyclopentane	0.226	0.094	0.444
2,3 Dimethylbutane	0.041	0.017	0.099
2 Methylpentane	0.663	0.274	1.599
3 Methylpentane	0.292	0.119	0.704
n-Hexane	0.803	0.328	1.936
Methylcyclopentane	0.306	0.105	0.721
Benzene	0.053	0.015	0.116
Cyclohexane	0.189	0.064	0.445
2-Methylhexane	0.084	0.039	0.236
3-Methylhexane	0.098	0.044	0.275
2,2,4 Trimethylpentane	0.000	0.000	0.000
Other C7's	0.256	0.111	0.711
n-Heptane	0.239	0.110	0.670
Methylcyclohexane	0.177	0.071	0.486
Toluene	0.049	0.016	0.126
Other C8's	0.208	0.096	0.641
n-Octane	0.046	0.023	0.147
Ethylbenzene	0.004	0.002	0.012
M & P Xylenes	0.011	0.004	0.033
O-Xylene	0.002	0.001	0.006
Other C9's	0.050	0.025	0.177
n-Nonane	0.004	0.002	0.014
Other C10's	0.005	0.003	0.020
n-Decane	0.001	0.001	0.004
Undecanes (11)	0.008	0.005	0.038
Totals	100.000	17.730	100.000

Computed Real Characteristics Of Total Sample:

Specific Gravity ---------- 1.249 (Air=1)
Compressibility (Z) ---------- 0.9882
Molecular Weight ---------- 35.74

Gross Heating Value
Dry Basis ---------- 2055 BTU/CF
Saturated Basis ---------- 2020 BTU/CF

FESCO, Ltd.
1100 Fesco Ave. - Alice, Texas 78332

For: Ute Energy Upstream Holdings
P. O. Box 789
Fort Duchesne, Utah 84026

Sample: Ute Tribal 10-30-3-2E
Gas Evolved from Hydrocarbon Liquid Flashed
From 45 psig & 160 °F to 0 psig & 70 °F

Date Sampled: 11/02/2011 Job Number: 16135.001

CHROMATOGRAPH EXTENDED ANALYSIS - SUMMATION REPORT

COMPONENT	MOL%	GPM
Hydrogen Sulfide*	< 0.001	
Nitrogen	0.494	
Carbon Dioxide	0.716	
Methane	37.302	
Ethane	19.192	5.103
Propane	19.627	5.376
Isobutane	3.482	1.133
n-Butane	9.005	2.823
2-2 Dimethylpropane	0.048	0.018
Isopentane	2.597	0.944
n-Pentane	3.362	1.212
Hexanes	2.303	0.945
Heptanes Plus	1.872	0.760
Totals	100.000	18.315

Computed Real Characteristics Of Heptanes Plus:

Specific Gravity	3.363	(Air=1)
Molecular Weight	96.22	
Gross Heating Value	5015	BTU/CF

Computed Real Characteristics Of Total Sample:

Specific Gravity	1.265	(Air=1)
Compressibility (Z)	0.9878	
Molecular Weight	36.20	
Gross Heating Value		
Dry Basis	2080	BTU/CF
Saturated Basis	2045	BTU/CF

*Hydrogen Sulfide tested in laboratory by Stained Tube Method (GPA 2377)
Results: 0.063 Gr/100 CF, 1.0 PPMV or 0.0001 Mol %

Base Conditions: 14.650 PSI & 60 Deg F

Certified: FESCO, Ltd. - Alice, Texas

Analyst: TJ
Processor: AM
Cylinder ID: FL-7s

David Dannhaus 361-661-7015

CHROMATOGRAPH EXTENDED ANALYSIS
TOTAL REPORT

COMPONENT	MOL %	GPM	WT %
Hydrogen Sulfide*	< 0.001		< 0.001
Nitrogen	0.494		0.382
Carbon Dioxide	0.716		0.870
Methane	37.302		16.530
Ethane	19.192	5.103	15.940
Propane	19.627	5.376	23.906
Isobutane	3.482	1.133	5.590
n-Butane	9.005	2.823	14.457
2,2 Dimethylpropane	0.048	0.018	0.096
Isopentane	2.597	0.944	5.175
n-Pentane	3.362	1.212	6.700
2,2 Dimethylbutane	0.017	0.007	0.040
Cyclopentane	0.230	0.095	0.446
2,3 Dimethylbutane	0.040	0.016	0.095
2 Methylpentane	0.632	0.261	1.504
3 Methylpentane	0.310	0.126	0.738
n-Hexane	1.074	0.439	2.556
Methylcyclopentane	0.325	0.111	0.756
Benzene	0.077	0.021	0.166
Cyclohexane	0.245	0.083	0.569
2-Methylhexane	0.084	0.039	0.232
3-Methylhexane	0.088	0.040	0.244
2,2,4 Trimethylpentane	0.000	0.000	0.000
Other C7's	0.230	0.100	0.630
n-Heptane	0.284	0.130	0.786
Methylcyclohexane	0.206	0.082	0.559
Toluene	0.046	0.015	0.117
Other C8's	0.168	0.078	0.511
n-Octane	0.039	0.020	0.123
Ethylbenzene	0.002	0.001	0.006
M & P Xylenes	0.012	0.005	0.035
O-Xylene	0.002	0.001	0.006
Other C9's	0.034	0.017	0.119
n-Nonane	0.008	0.004	0.028
Other C10's	0.013	0.008	0.051
n-Decane	0.003	0.002	0.012
Undecanes (11)	0.006	0.004	0.025
Totals	100.000	18.315	100.000

Computed Real Characteristics Of Total Sample:

Specific Gravity	1.265	(Air=1)
Compressibility (Z)	0.9878	
Molecular Weight	36.20	
Gross Heating Value		
Dry Basis	2080	BTU/CF
Saturated Basis	2045	BTU/CF

QUESTAR APPLIED TECHNOLOGY

1210 D. Street, Rock Springs, Wyoming 82901

(307) 352-7292

LIMS ID:	N/A		Description:	Coleman Tribal 2-18-4-2E
Analysis Date/Time:	6/27/2011	8:12 AM	Field:	Leland Bench
Analyst Initials:	PRP		ML#:	Ute Energy
Instrument ID:	Instrument 1		GC Method:	Quesbtex
Data File:	QPC12.D			
Date Sampled:	6/22/2011			

Component	Mol%	Wt%	LV%
Methane	78.3766	58.6881	68.9498
Ethane	9.8817	13.8690	13.7534
Propane	6.7479	13.8884	9.6562
Isobutane	0.9285	2.5189	1.5774
n-Butane	1.7060	4.6282	2.7933
Neopentane	0.0101	0.0341	0.0201
Isopentane	0.4236	1.4264	0.8052
n-Pentane	0.3980	1.3404	0.7486
2,2-Dimethylbutane	0.0019	0.0078	0.0042
2,3-Dimethylbutane	0.0252	0.1012	0.0535
2-Methylpentane	0.0863	0.3471	0.1860
3-Methylpentane	0.0357	0.1436	0.0756
n-Hexane	0.0995	0.4003	0.2125
Heptanes	0.1398	0.6137	0.2914
Octanes	0.0236	0.1253	0.0612
Nonanes	0.0113	0.0643	0.0301
Decanes plus	0.0022	0.0146	0.0070
Nitrogen	0.6365	0.8322	0.3624
Carbon Dioxide	0.4656	0.9564	0.4121
Oxygen	0.0000	0.0000	0.0000
Hydrogen Sulfide	0.0000	0.0000	0.0000
Total	100.0000	100.0000	100.0000

Global Properties		Units
Gross BTU/Real CF	1284.6	BTU/SCF at 60°F and14.73 psia
Sat.Gross BTU/Real CF	1263.4	BTU/SCF at 60°F and14.73 psia
Gas Compressibility (Z)	0.9962	
Specific Gravity	0.7413	air=1
Avg Molecular Weight	21.425	gm/mole
Propane GPM	1.849348	gal/MCF
Butane GPM	0.839526	gal/MCF
Gasoline GPM	0.460696	gal/MCF
26# Gasoline GPM	0.998320	gal/MCF
Total GPM	3.150733	gal/MCF
Base Mol%	100.076	%v/v

Sample Temperature:	132	°F
Sample Pressure:	71	psig
H2SLength of Stain Tube	N/A	ppm

Component	Mol%	Wt%	LV%
Benzene	0.0064	0.0235	0.0094
Toluene	0.0060	0.0259	0.0105
Ethylbenzene	0.0006	0.0029	0.0012
M&P Xylene	0.0021	0.0105	0.0043
O-Xylene	0.0005	0.0023	0.0009
2,2,4-Trimethylpentane	0.0083	0.0442	0.0216
Cyclopentane	0.0000	0.0000	0.0000
Cyclohexane	0.0210	0.0825	0.0371
Methylcyclohexane	0.0189	0.0868	0.0395
Description:	Coleman Tribal 2-18-4-2E		

GRI GlyCalc Information

Component	Mol%	Wt%	LV%
Carbon Dioxide	0.4656	0.9564	0.4121
Hydrogen Sulfide	0.0000	0.0000	0.0000
Nitrogen	0.6365	0.8322	0.3624
Methane	78.3766	58.6881	68.9498
Ethane	9.8817	13.8690	13.7534
Propane	6.7479	13.8884	9.6562
Isobutane	0.9285	2.5189	1.5774
n-Butane	1.7060	4.6282	2.7933
Isopentane	0.4337	1.4605	0.8253
n-Pentane	0.3980	1.3404	0.7486
Cyclopentane	0.0000	0.0000	0.0000
n-Hexane	0.0995	0.4003	0.2125
Cyclohexane	0.0210	0.0825	0.0371
Other Hexanes	0.1491	0.5997	0.3193
Heptanes	0.0792	0.3508	0.1733
Methylcyclohexane	0.0189	0.0868	0.0395
2,2,4 Trimethylpentane	0.0083	0.0442	0.0216
Benzene	0.0064	0.0235	0.0094
Toluene	0.0060	0.0259	0.0105
Ethylbenzene	0.0006	0.0029	0.0012
Xylenes	0.0026	0.0128	0.0052
C8+ Heavies	0.0339	0.1885	0.0919
Subtotal	100.0000	100.0000	100.0000
Oxygen	0.0000	0.0000	0.0000
Total	100.0000	100.0000	100.0000

ATTACHMENT C

FACILITY EQUIPMENT EMISSION CALCULATIONS

Company: Crescent Point Energy U.S. Corp
Site: Ute Tribal 4-23-3-1W-H1

TABLE 1: Uncontrolled Potential to Emit Summary Sheet

Equipment	NO_x		CO		VOC		Total HAPs	
	lb/hr	tpy	lb/hr	tpy	lb/hr	tpy	lb/hr	tpy
3 1,000-bbl Crude Oil Tanks	n/a	n/a	n/a	n/a	19.98	87.51	1.17	5.11
1 1,000-bbl Produced Water Tank(s)	n/a	n/a	n/a	n/a	n/a	n/a	n/a	n/a
1 MMBtu/hr Heater/treater	0.11	0.47	0.09	0.40	0.01	0.03	0.00	0.01
4 Tank Heaters (0.5 MMBtu/hr each)	0.22	0.95	0.18	0.80	0.01	0.05	0.00	0.02
Oil Tank Truck Loading	n/a	n/a	n/a	n/a	3.06	4.52	0.18	0.26
Combustor(s)	0.07	0.30	0.31	1.38	0.14	0.62	n/a	n/a
Fugitive Emissions	n/a	n/a	n/a	n/a	0.15	0.67	0.01	0.02
Methanol Tank - 55-gallon drum	n/a	n/a	n/a	n/a	0.00	0.00	n/a	n/a
Glycol Tank - 55-gallon drum	n/a	n/a	n/a	n/a	0.00	0.00	n/a	n/a
Engine(s)	0.99	4.33	1.98	8.66	1.15	5.03	0.10	0.43
Total PTE	**1.38**	**6.06**	**2.57**	**11.24**	**24.51**	**98.43**	**1.45**	**5.850**

Equipment	PM		PM_{10}		$PM_{2.5}$		SO_2	
	lb/hr	tpy	lb/hr	tpy	lb/hr	tpy	lb/hr	tpy
3 1,000-bbl Crude Oil Tanks	n/a	n/a	n/a	n/a	n/a	n/a	n/a	n/a
1 1,000-bbl Produced Water Tank(s)	n/a	n/a	n/a	n/a	n/a	n/a	n/a	n/a
1 MMBtu/hr Heater/treater	0.01	0.04	0.01	0.04	0.01	0.04	n/a	n/a
4 Tank Heaters (0.5 MMBtu/hr each)	0.02	0.07	0.02	0.07	0.02	0.07	n/a	n/a
Oil Tank Truck Loading	n/a	n/a	n/a	n/a	n/a	n/a	n/a	n/a
Combustor(s)	n/a	n/a	n/a	n/a	n/a	n/a	n/a	n/a
Fugitive Emissions	n/a	n/a	n/a	n/a	n/a	n/a	n/a	n/a
Methanol Tank - 55-gallon drum	n/a	n/a	n/a	n/a	n/a	n/a	n/a	n/a
Glycol Tank - 55-gallon drum	n/a	n/a	n/a	n/a	n/a	n/a	n/a	n/a
Engine(s)	0.06	0.27	0.03	0.13	0.03	0.13	n/a	n/a
Total PTE	**0.09**	**0.38**	**0.06**	**0.24**	**0.06**	**0.24**	**n/a**	**n/a**

Equipment	Benzene		Toluene		Ethylbenzene		Xylene	
	lb/hr	tpy	lb/hr	tpy	lb/hr	tpy	lb/hr	tpy
3 1,000-bbl Crude Oil Tanks	0.057	0.250	0.050	0.218	0.003	0.015	0.015	0.065
1 1,000-bbl Produced Water Tank(s)	n/a	n/a	n/a	n/a	n/a	n/a	n/a	n/a
1 MMBtu/hr Heater/treater	0.000	0.000	0.000	0.000	n/a	n/a	n/a	n/a
4 Tank Heaters (0.5 MMBtu/hr each)	0.000	0.000	0.000	0.000	n/a	n/a	n/a	n/a
Oil Tank Truck Loading	0.009	0.013	0.008	0.011	0.001	0.001	0.002	0.003
Combustor(s)	n/a	n/a	n/a	n/a	n/a	n/a	n/a	n/a
Fugitive Emissions	0.000	0.001	0.000	0.001	0.000	0.000	0.000	0.000
Methanol Tank - 55-gallon drum	n/a	n/a	n/a	n/a	n/a	n/a	n/a	n/a
Glycol Tank - 55-gallon drum	n/a	n/a	n/a	n/a	n/a	n/a	n/a	n/a
Engine(s)	0.005	0.022	n/a	n/a	n/a	n/a	n/a	n/a
Total PTE	**0.0712**	**0.286**	**0.0578**	**0.231**	**0.00389**	**0.01555**	**0.0173**	**0.0691**

Equipment	Acetaldehyde		Acrolein		n-Hexane		Formaldehyde	
	lb/hr	tpy	lb/hr	tpy	lb/hr	tpy	lb/hr	tpy
3 1,000-bbl Crude Oil Tanks	n/a	n/a	n/a	n/a	1.041	4.559	n/a	n/a
1 1,000-bbl Produced Water Tank(s)	n/a	n/a	n/a	n/a	n/a	n/a	n/a	n/a
1 MMBtu/hr Heater/treater	n/a	n/a	n/a	n/a	0.002	0.009	0.000	0.000
4 Tank Heaters (0.5 MMBtu/hr each)	n/a	n/a	n/a	n/a	0.004	0.017	0.000	0.001
Oil Tank Truck Loading	n/a	n/a	n/a	n/a	0.160	0.235	n/a	n/a
Combustor(s)	n/a	n/a	n/a	n/a	n/a	n/a	n/a	n/a
Fugitive Emissions	n/a	n/a	n/a	n/a	0.004	0.019	n/a	n/a
Methanol Tank - 55-gallon drum	n/a	n/a	n/a	n/a	n/a	n/a	n/a	n/a
Glycol Tank - 55-gallon drum	n/a	n/a	n/a	n/a	n/a	n/a	n/a	n/a
Engine(s)	0.009	0.039	0.008	0.037	n/a	n/a	0.066	0.288
Total PTE	**0.00895**	**0.0392**	**0.00844**	**0.0370**	**1.211**	**4.840**	**0.0660**	**0.289**

Notes:
BBL = Barrels
lb/hr = Pounds per hour
tpy = Tons per year
PM = Particulate matter
PM_{10} = Particulate matter of 10 microns or less
$PM_{2.5}$ = Particulate matter of 2.5 microns or less
NOx = Nitrogen oxides
CO = Carbon monoxide
VOC = Volatile organic compounds
HAPs = Hazardous air pollutants
SO_2 = Sulfur dioxides
n/a = Not applicable

Company: Crescent Point Energy U.S. Corp
Site: Ute Tribal 4-23-3-1W-H1

TABLE 2: Total Actual Emissions Summary Sheet

Equipment	NO_x		CO		VOC		Total HAPs	
	lb/hr	tpy	lb/hr	tpy	lb/hr	tpy	lb/hr	tpy
3 1,000-bbl Crude Oil Tanks[1]	n/a	n/a	n/a	n/a	1.00	4.38	0.06	0.26
1 1,000-bbl Produced Water Tank(s)	n/a	n/a	n/a	n/a	n/a	n/a	n/a	n/a
1 MMBtu/hr Heater/treater	0.11	0.47	0.09	0.40	0.01	0.03	0.00	0.01
4 Tank Heaters (0.5 MMBtu/hr each)	0.22	0.95	0.18	0.80	0.01	0.05	0.00	0.02
Oil Tank Truck Loading	n/a	n/a	n/a	n/a	3.06	4.52	0.18	0.26
Combustor(s)	0.07	0.30	0.31	1.38	0.14	0.62	n/a	n/a
Fugitive Emissions	n/a	n/a	n/a	n/a	0.15	0.67	0.01	0.02
Methanol Tank - 55-gallon drum	n/a	n/a	n/a	n/a	0.00	0.00	n/a	n/a
Glycol Tank - 55-gallon drum	n/a	n/a	n/a	n/a	0.00	0.00	n/a	n/a
Engine(s)	0.99	4.33	1.98	8.66	0.69	3.03	0.10	0.43
Total PTE	**1.38**	**6.06**	**2.57**	**11.23**	**5.07**	**13.29**	**0.35**	**0.997**

Equipment	PM		PM_{10}		$PM_{2.5}$		SO_2	
	lb/hr	tpy	lb/hr	tpy	lb/hr	tpy	lb/hr	tpy
3 1,000-bbl Crude Oil Tanks[1]	n/a	n/a	n/a	n/a	n/a	n/a	n/a	n/a
1 1,000-bbl Produced Water Tank(s)	n/a	n/a	n/a	n/a	n/a	n/a	n/a	n/a
1 MMBtu/hr Heater/treater	0.01	0.04	0.01	0.04	0.01	0.04	n/a	n/a
4 Tank Heaters (0.5 MMBtu/hr each)	0.02	0.07	0.02	0.07	0.02	0.07	n/a	n/a
Oil Tank Truck Loading	n/a	n/a	n/a	n/a	n/a	n/a	n/a	n/a
Combustor(s)	n/a	n/a	n/a	n/a	n/a	n/a	n/a	n/a
Fugitive Emissions	n/a	n/a	n/a	n/a	n/a	n/a	n/a	n/a
Methanol Tank - 55-gallon drum	n/a	n/a	n/a	n/a	n/a	n/a	n/a	n/a
Glycol Tank - 55-gallon drum	n/a	n/a	n/a	n/a	n/a	n/a	n/a	n/a
Engine(s)	0.06	0.27	0.03	0.13	0.03	0.13	n/a	n/a
Total PTE	**0.09**	**0.38**	**0.06**	**0.24**	**0.06**	**0.24**	**n/a**	**n/a**

Equipment	Benzene		Toluene		Ethylbenzene		Xylene	
	lb/hr	tpy	lb/hr	tpy	lb/hr	tpy	lb/hr	tpy
3 1,000-bbl Crude Oil Tanks[1]	0.003	0.013	0.050	0.011	0.003	0.001	0.015	0.003
1 1,000-bbl Produced Water Tank(s)	n/a	n/a	n/a	n/a	n/a	n/a	n/a	n/a
1 MMBtu/hr Heater/treater	0.000	0.000	0.000	0.000	n/a	n/a	n/a	n/a
4 Tank Heaters (0.5 MMBtu/hr each)	0.000	0.000	0.000	0.000	n/a	n/a	n/a	n/a
Oil Tank Truck Loading	0.009	0.013	0.008	0.011	0.001	0.001	0.002	0.003
Combustor(s)	n/a	n/a	n/a	n/a	n/a	n/a	n/a	n/a
Fugitive Emissions	0.000	0.001	0.000	0.001	0.000	0.000	0.000	0.000
Methanol Tank - 55-gallon drum	n/a	n/a	n/a	n/a	n/a	n/a	n/a	n/a
Glycol Tank - 55-gallon drum	n/a	n/a	n/a	n/a	n/a	n/a	n/a	n/a
Engine(s)	0.005	0.022	n/a	n/a	n/a	n/a	n/a	n/a
Total PTE	**0.0169**	**0.0487**	**0.0578**	**0.0232**	**0.00389**	**0.00157**	**0.0173**	**0.00697**

Equipment	Acetaldehyde		Acrolein		n-Hexane		Formaldehyde	
	lb/hr	tpy	lb/hr	tpy	lb/hr	tpy	lb/hr	tpy
3 1,000-bbl Crude Oil Tanks[1]	n/a	n/a	n/a	n/a	1.041	0.228	n/a	n/a
1 1,000-bbl Produced Water Tank(s)	n/a	n/a	n/a	n/a	n/a	n/a	n/a	n/a
1 MMBtu/hr Heater/treater	n/a	n/a	n/a	n/a	0.002	0.009	0.000	0.000
4 Tank Heaters (0.5 MMBtu/hr each)	n/a	n/a	n/a	n/a	0.004	0.017	0.000	0.001
Oil Tank Truck Loading	n/a	n/a	n/a	n/a	0.160	0.235	n/a	n/a
Combustor(s)	n/a	n/a	n/a	n/a	n/a	n/a	n/a	n/a
Fugitive Emissions	n/a	n/a	n/a	n/a	0.004	0.019	n/a	n/a
Methanol Tank - 55-gallon drum	n/a	n/a	n/a	n/a	n/a	n/a	n/a	n/a
Glycol Tank - 55-gallon drum	n/a	n/a	n/a	n/a	n/a	n/a	n/a	n/a
Engine(s)	0.009	0.039	0.008	0.037	n/a	n/a	0.066	0.288
Total PTE	**0.00895**	**0.0392**	**0.00844**	**0.0370**	**1.211**	**0.508**	**0.0658**	**0.289**

[1]Oil tank emissions are routed to a combustor with a 95% destruction efficiency.

Notes:

BBL = Barrels
lb/hr = Pounds per hour
tpy = Tons per year
PM = Particulate matter
PM_{10} = Particulate matter of 10 microns or less
$PM_{2.5}$ = Particulate matter of 2.5 microns or less

NOx = Nitrogen oxides
CO = Carbon monoxide
VOC = Volatile organic compounds
HAPs = Hazardous air pollutants
SO_2 = Sulfur dioxides
n/a = Not applicable

Emission Calculation Assumptions Detail Sheet
Ute Tribal 4-23-3-1W-H1

1	Gas heating value of 1153-Btu/scf is used for the flare, the heater treaters, and the pumpjack engine. Based on the low pressure gas analysis.
2	Since Heater Treater efficiency is unknown, the maximum allowable value of 80% is used to calculate potential emissions.
3	0% destruction and removal efficiency (DRE) is used to calculate uncontrolled emissions from the heater treater.
4	Hydrogen Sulfide content in gas was 0.00% based on gas analysis. Therefore the AP-42 Sulfur Dioxide emission factor of 0.6 lb/MMBtu was not used to calculate heater/treater emissions.
5	There are no emissions of fluorides, sulfuric acid mists, hydrogen sulfide, sulfur compounds, or lead compounds.
6	Emission factor is based on acceptable alternative to estimating water storage tank emissions using EPA-450/3-85-001a.
7	As calculated using a lab measurement and the gas-to-oil ratio (GOR). See average oil analyses.
8	Global Warming Potentials for each GHG pollutant are: Carbon Dioxide (CO_2) = 1; Methane (CH_4) = 25; nitrous oxide (N_2O) = 298.
9	Flash gas heating value of 2513-Btu/scf is based on flash gas analysis

Company: Crescent Point Energy U.S. Corp
Site: Ute Tribal 4-23-3-1W-H1

Assumption 8

Assumption 8

TABLE 3: Uncontrolled Greenhouse Gas (GHG) Potential Emission Summary Sheet

SOURCE DESCRIPTION	CH_4 MT/yr	CO_2 MT/yr	N_2O MT/yr	CO_2e MT/yr	CH_4 Tons/yr	CO_2 Tons/yr	N_2O Tons/yr	CO_2e Tons/yr
3 1,000-bbl Crude Oil Tanks	12.14	1.09	n/a	304.67	13.39	1.20	n/a	335.84
1 1,000-bbl Produced Water Tank(s)	n/a	n/a	n/a	n/a	n/a	n/a	n/a	n/a
1 MMBtu/hr Heater/treater	0.01	464.81	0.00	465.29	0.01	512.36	0.00	512.89
4 Tank Heaters (0.5 MMBtu/hr each)	0.02	929.61	0.00	930.57	0.02	1,024.72	0.00	1,025.78
Oil Tank Truck Loading	0.63	0.06	n/a	15.72	0.69	0.06	n/a	17.33
Combustor(s)	n/a	n/a	n/a	n/a	n/a	n/a	n/a	n/a
Fugitive Emissions	0.98	0.00	n/a	24.51	1.08	0.00	n/a	27.02
Methanol Tank - 55-gallon drum	n/a	n/a	n/a	n/a	n/a	n/a	n/a	n/a
Glycol Tank - 55-gallon drum	n/a	n/a	n/a	n/a	n/a	n/a	n/a	n/a
Engine(s)	0.03	1,491.35	0.00	1,492.89	0.03	1,643.93	0.00	1,645.63
TOTAL EMISSIONS	**13.80**	**2,886.92**	**0.01**	**3,233.65**	**15.22**	**3,182.28**	**0.01**	**3,564.49**
TOTAL CO_2e EMISSIONS	**345.12**	**2,886.92**	**1.62**	**3,233.65**	**380.42**	**3,182.28**	**1.79**	**3,564.49**

Notes:

MT/yr = Metric tons per year
n/a = No data available
MMBtu/hr = Million British Thermal Units per hour
BBL = Barrels

CH_4= Methane
CO_2 = Carbon dioxide
N_2O = NItrous oxides
CO_2e = Carbon dioxide equivalents

Company: Crescent Point Energy U.S. Corp
Site: Ute Tribal 4-23-3-1W-H1

Assumption 8

Assumption 8

TABLE 4: Controlled Greenhouse Gas (GHG) Potential Emission Summary Sheet

SOURCE DESCRIPTION	CH_4 MT/yr	CO_2 MT/yr	N_2O MT/yr	CO_2 e MT/yr	CH_4 Tons/yr	CO_2 Tons/yr	N_2O Tons/yr	CO_2 e Tons/yr
3 1,000-bbl Crude Oil Tanks	0.61	1.09	n/a	16.27	0.67	1.20	n/a	17.93
1 1,000-bbl Produced Water Tank(s)	n/a	n/a	n/a	n/a	n/a	n/a	n/a	n/a
1 MMBtu/hr Heater/treater	0.01	464.81	0.00	465.29	0.01	512.36	0.00	512.89
4 Tank Heaters (0.5 MMBtu/hr each)	0.02	929.61	0.00	930.57	0.02	1,024.72	0.00	1,025.78
Oil Tank Truck Loading	0.63	0.06	n/a	15.72	0.69	0.06	n/a	17.33
Combustor(s)	n/a	n/a	n/a	n/a	n/a	n/a	n/a	n/a
Fugitive Emissions	0.98	0.00	n/a	24.51	1.08	0.00	n/a	27.02
Methanol Tank - 55-gallon drum	n/a	n/a	n/a	n/a	n/a	n/a	n/a	n/a
Glycol Tank - 55-gallon drum	n/a	n/a	n/a	n/a	n/a	n/a	n/a	n/a
Engine(s)	0.03	1,491.35	0.00	1,492.89	0.03	1,643.93	0.00	1,645.63
TOTAL EMISSIONS	**2.27**	**2,886.92**	**0.01**	**2,945.26**	**2.50**	**3,182.28**	**0.01**	**3,246.59**
TOTAL CO_2e EMISSIONS	**56.72**	**2,886.92**	**1.62**	**2,945.26**	**62.52**	**3,182.28**	**1.79**	**3,246.59**

Notes:

MT/yr = Metric tons per year
n/a = No data available
MMBtu/hr = Million British Thermal Units per hour
BBL = Barrels

CH_4= Methane
CO_2 = Carbon dioxide
N_2O = NItrous oxides
CO_2e = Carbon dioxide equivalents

Crescent Point Energy U.S. Corp
Ute Tribal 4-23-3-1W-H1
LOW PRESSURE GAS COMPOSITION CALCULATIONS
(REPRESENTATIVE SAMPLE COLLECTED FROM COLEMAN TRIBAL 2-18-4-2E WELLSITE ON 6/27/2011)

Component	Molecular Weight (lb/lb-mol)	Mole (Vol.) Percent (%)	Mole Frac.	Gas Weight (lb/lb-mol)	Weight Percent (%)	LHV BTU Content	
						Btu/scf	Btu/scf*Mole Frac
Methane	16.043	78.3766%	0.78377	12.57	58.680%	909.4	712.8
Ethane	30.069	9.8817%	0.09882	2.97	13.867%	1618.7	160.0
Total HC (Non-VOC)		*88.2583%*	*0.88258*	*15.55*	*72.546%*	*2528.1*	*872.7*
Propane	44.096	6.7479%	0.06748	2.98	13.886%	2314.90	156.21
i-Butane	58.122	0.9285%	0.00929	0.54	2.518%	3000.40	27.86
n-Butane	58.122	1.7060%	0.01706	0.99	4.627%	3010.80	51.36
i-Pentane	72.150	0.4337%	0.00434	0.31	1.460%	3699.00	16.04
n-Pentane	72.150	0.3980%	0.00398	0.29	1.340%	3703.90	14.74
Hexanes	86.110	0.1701%	0.00170	0.15	0.684%	4403.90	7.49
Heptanes	100.210	0.0981%	0.00098	0.10	0.459%	5100.30	5.00
Octanes	114.229	0.0339%	0.00034	0.04	0.181%	5796.20	1.96
Nonanes	128.260	0.0000%	0.00000	0.00	0.000%	6493.60	0.00
Decanes+	142.290	0.0000%	0.00000	0.00	0.000%	7189.90	0.00
Benzene	78.120	0.0064%	0.00006	0.00	0.023%	0.00	0.00
Toluene	92.130	0.0060%	0.00006	0.01	0.026%	0.00	0.00
Ethylbenzene	106.160	0.0006%	0.00001	0.00	0.003%	0.00	0.00
Xylene	106.160	0.0026%	0.00003	0.00	0.013%	0.00	0.00
n-Hexane	86.177	0.0995%	0.00100	0.09	0.400%	0.00	0.00
2,2,4-Trimethylpentane	114.230	0.0083%	0.00008	0.01	0.044%	0.00	0.00
Total NMNE VOC		*10.64%*	*0.10640*	*5.50*	*25.66%*	*44712.90*	*280.67*
Carbon Dioxide	44.01	0.4656%	0.00466	0.20	0.956%	0	0
Nitrogen	28.02	0.6365%	0.00637	0.18	0.832%	0	0
Hydrogen Sulfide	34.08	0.0000%	0.00000	0.00	0.000%	586.8	0
Helium	4.00	0.0000%	0.00000	0.00	0.000%	0	0
	Totals	**100.00%**	**100.00%**	**21.43**	**100.00%**		**1153.39**

Fraction of NMNE VOC[1]: **0.1064**
Gas Specific Gravity: **0.73966**
LHV BTU Content (Btu/scf): **1153.39**

[1] NMNE VOC = Non-methane, non-ethane volatile organic compounds

Crescent Point Energy U.S. Corp
Ute Tribal 4-23-3-1W-H1
Total Tank Emissions Detail Sheet

Source ID Number	T1, T2, T3	Potential operation	8,760	hr/yr
Equipment ID		Recent Production	1050.0	bpd
Tank Description	3 1,000-bbl tanks			
Tank Usage	Crude oil storage	Annual throughput	383,250.0	bbl/yr
Tank Capacity	3,000 bbl		16,096,500	gal/yr

Potential Emissions - Flashing, Storage, Working, and Breathing

Pollutant	Hrs of Operation (hrs/yr)	Estimated Total Losses (lb/hr)	(tpy)	(lb/yr)	Source of Emission Factor
VOC	8,760	19.98	87.51	175028.72	Vasquez-Beggs Equation; TANKS 4.0.9D
HAPs	8,760	1.17	5.11	10216.49	Vasquez-Beggs Equation; TANKS 4.0.9D
Benzene	8,760	0.0571	0.25	500.41	Vasquez-Beggs Equation; TANKS 4.0.9D
Toluene	8,760	0.0499	0.22	436.94	Vasquez-Beggs Equation; TANKS 4.0.9D
Ethlybenzene	8,760	0.0034	0.01	29.42	Vasquez-Beggs Equation; TANKS 4.0.9D
Xylene	8,760	0.0149	0.07	130.77	Vasquez-Beggs Equation; TANKS 4.0.9D
N-Hexane	8,760	1.0410	4.56	9118.94	Vasquez-Beggs Equation; TANKS 4.0.9D
Methane	8,760	3.0561	13.39	26771.05	Vasquez-Beggs Equation; TANKS 4.0.9D
Carbon dioxide	8,760	0.2746	1.20	2405.74	Vasquez-Beggs Equation; TANKS 4.0.9D
Nitrous oxide	8,760	0.0000	0.00	0.00	Vasquez-Beggs Equation; TANKS 4.0.9D

Emissions Controlled (by flare with 95% control efficiency)

Pollutant	Hrs of Operation (hrs/yr)	Estimated Flash/Working/Breathing Losses (lb/hr)	(tpy)	(lb/yr)	Source of Emission Factor
VOC	8,760	1.00	4.376	8751.4	Lab Measurement & TANKS 4.0.9D
HAPs	8,760	0.06	0.255	510.8	Lab Measurement & TANKS 4.0.9D

Crescent Point Energy U.S. Corp
Ute Tribal 4-23-3-1W-H1
Storage, Working, and Breathing Emissions Detail Sheet

Source ID Number	T1, T2, T3	Potential operation	8,760	hr/yr
Equipment ID		Recent Production	1050.0	bpd
Tank Description	3 1,000-bbl tanks			
Tank Usage	Crude oil storage	Annual throughput	383,250.0	bbl/yr
Tank Capacity	3,000 bbl		16,096,500	gal/yr
Number of tanks	3			

Potential emissions per tank[1, 2]

Pollutant	Hrs of Operation (hrs/yr)	Estimated Storage/Working/Breathing Losses (lb/hr)	(tpy)	(lb/yr)	Source of Emission Factor
VOC - Working	8,760	0.08	0.37	733.04	TANKS 4.0.9D
VOC - Breathing	8,760	0.00	0.00	0.00	TANKS 4.0.9D
Total		0.08	0.37	733.04	TANKS 4.0.9D

Potential emissions all tanks

Pollutant	Hrs of Operation (hrs/yr)	Estimated Flash Losses (lb/hr)	(tpy)	(lb/yr)	Source of Emission Factor
VOC	8,760	0.25	1.10	2199.1	TANKS 4.0.9D
HAPs[3]	8,760	0.01	0.064	128.4	5.8370%
Benzene[3]	8,760	0.0007	0.003	6.3	0.2859%
Toluene[3]	8,760	0.0006	0.003	5.5	0.2496%
Ethlybenzene[3]	8,760	0.0000	0.000	0.4	0.0168%
Xylene[3]	8,760	0.0002	0.001	1.6	0.0747%
N-Hexane[3]	8,760	0.0131	0.057	114.6	5.2100%
Methane	8,760	0.0384	0.168	336.4	15.2952%
Carbon dioxide	8,760	0.0035	0.015	30.2	1.3745%
Nitrous Oxides		n/a	n/a	n/a	n/a

[1] See TANKS 4.0.9D output attached.

[2] Total wellsite oil throughput divided by the number of storage tanks used to calculate emissions.

[3] HAP emissions determined by multiplying by ratio of each HAP to VOCs calculated on the "Flash Gas Tank Emissions Summary Sheet"

Company Name:	**Crescent Point Energy U.S. Corp**	Permit No.:	
Facility Name:	**Ute Tribal 4-23-3-1W-H1**	Date:	**3/15/2018**

Volatile Organic Compound Emission Calculation for Flashing

Vasquez - Beggs Solution Gas/Oil Ratio Correlation Method

(For Estimating VOC Flashing Emissions, Using Stock Tank Gas-Oil Ratios)

INPUTS:

			DEFAULTS
Stock Tank API Gravity	32.8	**API**	**78**
Separator Pressure (psig)	40	**P**	**N/A**
Separator Temperature (°F)	165	**Ti**	**60**
Separator Gas Gravity at Initail Condition	0.7413	**SGi**	**0.90**
Stock Tank Barrels of Oil per day (BOPD)	1050	**Q**	**N/A**
Stock Tank Gas Molecular Weight	45.4	**MW**	**49**
Fraction VOC (C3+) of Stock Tank Gas	0.812	**VOC**	**0.8**
Atmospheric Pressure (psia)	13.89	**Patm**	**14.7**
Fraction C1 of Stock Tank Gas	0.124197	**C1**	**N/A**
Fraction CO2 of Stock Tank Gas	0.006651	**CO2**	**N/A**

SGx = Dissolved gas gravity at 100 psig = SGi [1.0+0.00005912*API*Ti*Log(Pi/114.7)]

SGx =	**0.66**

Document Notes:

Rs = (C1 * SGx * Pi^C2) exp ((C3 * API) / (Ti + 460))

Where:

Rs	Gas/Oil Ratio of liquid at pressure of interest
SGx	Dissolved gas gravity at 100 psig
Pi	Pressure of initial condition (psia)
API	API Gravity of liquid hydrocarbon at final condition
Ti	Temperature of initial condition (F)

Constants

	°API Gravity		
°APTI →	**< 30**	**>= 30**	Given °API
C1	~~0.0362~~	0.0178	**0.0178**
C2	~~1.0937~~	1.187	**1.187**
C3	~~25.724~~	23.931	**23.931**

Rs =	**4.71**	**scf/bbl**	***for P + Patm =*** ***53.89***

THC = Rs * Q * MW * 1/385 scf/lb-mole * 365 D/Yr * 1 ton/2000 lb.s

THC	Total Hydrocarbon (tons/year)
Rs	Solution Gas/Oil Ratio (scf/STB)
Q	Oil Production Rate (bbl/day)
MW	Molecular Weight of Stock Tank Gas (lb/lb-mole)
385	Volume of 1 lb-mole of gas at 14.7 psia and 68 F (WAQS&R Std Cond)

THC =	**106.4**	**TPY**

VOC = THC * Frac. of C3+ in the Stock Tank Vapor

VOC =	**86.41**	**TPY**	***from "FLASHING" of oil from separator to tank press***

C1 =	**13.22**	**TPY**	***from "FLASHING" of oil from separator to tank press***

Crescent Point Energy U.S. Corp
Ute Tribal 4-23-3-1W-H1
Flash Gas Tank Emissions Summary Detail Sheet

Source ID Number	T1, T2, T3	Potential operation	8,760	hr/yr
Number of tanks	3	Recent Production	1050.0	bpd
Tank Description	3 1,000-bbl tanks			
Tank Usage	Crude oil storage	Annual throughput	383,250.0	bbl/yr
Tank Capacity	3,000 bbl		16,096,500	gal/yr

Potential Flash Emissions[1]

Pollutant	Hrs of Operation (hrs/yr)	Estimated Flash Losses (lb/hr)	(tpy)	(lb/yr)	Source of Emission Factor	Ratio of HAPs to VOC Emissions
VOC	8,760	19.7294	86.4148	172,829.60	Vasquez-Beggs Equation	-
HAPs	8,760	1.1516	5.0441	10,088.12	Vasquez-Beggs Equation	5.8370%
Benzene	8,760	0.0564	0.2471	494.12	Vasquez-Beggs Equation	0.2859%
Toluene	8,760	0.0493	0.2157	431.45	Vasquez-Beggs Equation	0.2496%
Ethlybenzene	8,760	0.0033	0.0145	29.05	Vasquez-Beggs Equation	0.0168%
Xylene	8,760	0.0147	0.0646	129.13	Vasquez-Beggs Equation	0.0747%
N-Hexane	8,760	1.0279	4.5022	9,004.37	Vasquez-Beggs Equation	5.2100%
Methane[2]	8,760	3.0177	13.2173	26,434.69	Vasquez-Beggs Equation	15.2952%
Carbon Dioxide[2]	8,760	0.2712	1.1878	2,375.52	Vasquez-Beggs Equation	1.3745%
Nitrous Oxide	8,760	n/a	n/a	n/a	No data available	

[1] See lab measurement of gas-to-oil ratio (GOR) and composition of flash gas attached.

[2] Percentage methane and carbon dioxide based on overall pollutant content of flash gas emissions.

Crescent Point Energy U.S. Corp
Ute Tribal 4-23-3-1W-H1
Combustor Detail Sheet - Storage Tanks

Source Description	**COMBUSTOR(S)**		Max. Oil Production	1050.0 bbl/day
Equipment Make & Model	2 Cimarron 60" STD*		Hydrocarbon oil tank vapors recovered and sent to flare	9.49 Mscf/day
Maximum Combustor Rating	12.2 MMBtu/hr*			
Serial Number	TBD	Maximum Combustor Rating		12.2 MMBtu/hr
		Maximum Combustor Potential fuel usage		21.02 MMscf/yr
		Maximum Daily Oil Flash Gas Production		0.009 MMscf/day
		Potential fuel usage (Oil Flash Gas)		3.46 MMscf/yr

Assumption 1

Sale Gas Fuel Heating Value	1,153	Btu/scf	Stack ID	**COMBUSTOR**	
Flashed Gas Fuel Heating Value	2,513	Btu/scf	Control efficiency:	95.00%	
Pilot Light Heat Input Rating	0.04	MMBtu/hr	Pilot gas usage:	0.15	MMscf/yr
			Total potential fuel usage:	3.61	MMscf/yr

Assumption 9

Potential Emissions from Oil Flash Gas Flared Daily

Pollutant	Emission Factor lb/MMBtu	Hrs of Operation (hrs/yr)	Estimated Emissions (lb/hr)	(tpy)	(lb/yr)	Source of Emission Factors
TOC	0.14	8,760	0.139	0.61	1218.01	AP-42 Table 13.5-1
NOx	0.068	8,760	0.068	0.30	591.60	AP-42 Table 13.5-1
CO	0.31	8,760	0.308	1.35	2697.02	AP-42 Table 13.5-2

Potential Emissions from Flare Pilot Light

Pollutant	Emission Factor lb/MMBtu	Hrs of Operation (hrs/yr)	Estimated Emissions (lb/hr)	(tpy)	(lb/yr)	Source of Emission Factors
TOC	0.14	8,760	0.003	0.01	24.22	AP-42 Table 13.5-1
NOx	0.068	8,760	0.001	0.01	11.76	AP-42 Table 13.5-1
CO	0.31	8,760	0.006	0.03	53.63	AP-42 Table 13.5-2

* - The actual make and model of the combustor(s) is dependent upon actual production and corresponding emissions, as per NSPS Supart OOOOa. The make and model depicted represents the anticipated maximum MMBtu/hr rating.

Average Oil Analysis Detail Sheet

Mole (Vol.) Percent (%)	Component	Wellsite Name		
		Ute Tribal 15-18-4-2E	Ute Tribal 10-30-3-2E	Ute Tribal 1-5-4-2E
30.3083%	Methane	14.2940%	37.3020%	39.3290%
17.8703%	Ethane	17.2180%	19.1920%	17.2010%
48.18%	*Total HC (Non-VOC)*	*31.51%*	*56.49%*	*56.53%*
22.8830%	Propane	29.0850%	19.6270%	19.9370%
4.5973%	i-Butane	6.4540%	3.4820%	3.8560%
10.4910%	n-Butane	13.6040%	9.0050%	8.8640%
3.3380%	i-Pentane	4.6720%	2.5970%	2.7450%
3.9887%	n-Pentane	5.0800%	3.6400%	3.2460%
1.9680%	Hexanes	2.8280%	1.5690%	1.5070%
0.9570%	Heptanes	1.1250%	0.8920%	0.8540%
0.2323%	Octanes	0.2360%	0.2070%	0.2540%
0.0470%	Nonanes	0.0450%	0.0420%	0.0540%
0.0140%	Decanes+	0.0060%	0.0220%	0.0140%
0.0693%	Benzene	0.0780%	0.0770%	0.0530%
0.0513%	Toluene	0.0590%	0.0460%	0.0490%
0.0030%	Ethylbenzene	0.0030%	0.0020%	0.0040%
0.0133%	Xylene	0.0130%	0.0140%	0.0130%
1.1453%	n-Hexane	1.5590%	1.0740%	0.8030%
0.0000%	2,2,4-Trimethylpentane	0.0000%	0.0000%	0.0000%
49.80%	*Total NMNE VOC [1]*	*64.85%*	*42.30%*	*42.25%*
0.5917%	Carbon Dioxide	0.4000%	0.7160%	0.6590%
1.4307%	Nitrogen	3.2410%	0.4940%	0.5570%
0.0005%	Hydrogen Sulfide	0.0004%	0.0001%	0.0010%
0.0000%	Helium	0.0000%	0.0000%	0.0000%
100.00%		**100.00%**	**100.00%**	**100.00%**

158.33	Separator Temperature in degrees	160	160	155
40.33	Separator Pressure in psia	30	45	46
34.44	API Gravity	32.82	36.89	33.61
1.37	Gas Specific Gravity	1.599	1.265	1.249
39.12	Molecular Wt	45.41	36.20	35.74
9.03	Gas-to-Oil Ratio (scf/bbl)	6.80	11.50	8.80
2,193	LHV BTU Content (Btu/scf):	2,513	2,045	2,020

[1] NMNE VOC = Non-methane, non-ethane volatile organic compounds

Crescent Point Energy U.S. Corp
Ute Tribal 4-23-3-1W-H1
Natural Gas Burners Detail Sheet

Equipment ID	HEAT-1, HEAT-2, HEAT-3, HEAT-4			
Source Description	4 Tank heaters			
Equipment Usage	0.5 MMBtu/hr per heater on storage tanks			
Equipment Make		Potential operation	8,760	hr/yr
Equipment Model	Assumption 1	Potential fuel usage	15	MMscf/yr
Serial Number	N/A		1,734	scf/hr
		Assumption 1		Assumption 1
Fuel Type	Field Gas	1 Metric Ton =	2,205	pounds
Net Fuel Heating Value	1,153 Btu/scf	1 Kilogram =	2	pounds
Fuel Heating Value-Avg	1,153 Btu/scf	Fuel Heating Value-Producing	1,153	Btu/scf
Heat Input	2.00 MMBtu/hr	Exit Temperature	400	deg F
Permit Status		Volume Flow Rate	180	ft^3/min
Burner Efficiency	80 %	Destruction Efficiency	0	%
	Assumption 2			Assumption 3

Potential Emissions

Pollutant	Emission Factor (lb/MMscf)	Nominal Rating (MMBtu/hr)	Hrs of Operation (hrs/yr)	Estimated Emissions (lb/hr)	Estimated Emissions (tpy)	Source of Emission Factor
NOx	100.00	2.00	8,760	0.22	0.95	AP-42 Table 1.4-1
CO	84.00	2.00	8,760	0.18	0.80	AP-42 Table 1.4-1
TOC	11.00	2.00	8,760	0.02	0.10	AP-42 Table 1.4-2
VOC	5.50	2.00	8,760	0.01	0.05	AP-42 Table 1.4-2
SO_2	0.00	2.00	8,760	0.00	0.00	Gas Analysis
$PM/PM_{10}/PM_{2.5}$	7.60	2.00	8,760	0.02	0.07	AP-42 Table 1.4-2
HAPs	NA	2.00	8,760	0.00	0.02	Summary of HAPs
Benzene	2.10E-03	2.00	8,760	0.00	0.00	AP-42 Table 1.4-3
Toluene	3.40E-03	2.00	8,760	0.00	0.00	AP-42 Table 1.4-3
n-Hexane	1.80E+00	2.00	8,760	0.00	0.02	AP-42 Table 1.4-3
Formaldehyde	7.50E-02	2.00	8,760	0.00	0.00	AP-42 Table 1.4-3

Pollutant	Emission Factor (kg CO_2/MMBtu)	Nominal Rating (MMBtu/hr)	Hrs of Operation (hrs/yr)	Estimated Emissions (lb/hr)	Estimated Emissions metric tons per year (MTPY)	Source of Emission Factor
CH_4	1.00E-03	2.00	8,760	0.00	0.02	Title 40, Part 98, Subpart C, Table C-2
CO_2	53.06	2.00	8,760	233.95	929.61	Title 40, Part 98, Subpart C, Table C-1
N_2O	1.00E-04	2.00	8,760	0.00	0.00	Title 40, Part 98, Subpart C, Table C-2

Natural gas burner emissions for criteria pollutants can be estimated using the following equation:

$$E_X = \frac{EF_X \times BR \times 10^6 \times HO}{\frac{B_{EFF}}{100} \times HV_{Avg} \times 10^6 \times 2000} \times \frac{HV_{Prod}}{HV_{Avg}} \times \left(\frac{(100 - DRE)}{100} \right)$$

where:
E_X = emissions for pollutant X (tpy);
EF_X = emission factor for pollutant X (lb/MMscf);
BR = burner rating (MMBtu/hr);
B_{Eff} = burner efficiency (%);
HO = annual hours of operation (hr/yr);
HV_{Avg} = average gas heating value (Btu/scf);
HV_{Prod} = produced gas heating value (Btu/scf);
DRE = destruction and removal efficiency (%);
1-ton = 2000-lb;
1-MMBtu = 10^6-Btu; and
1-MMscf = 10^6-scf.

Natural gas burner emissions for GHG pollutants can be estimated using the following equation:

$$CO_2 = 1 \times 10^{-3} \times \text{Fuel Consumption} \times \text{Heating Value} \times \text{Emission Factor}$$

where:
CO_2 = Annual CO_2 mass emissions for natural gas combustion
Fuel Consumption = Annual fuel consumption in MMscf per year.
Heating Value = Heating value of natural gas in Btu per scf.
Emission Factor = in kilograms (kg) CO2 per MMBtu.

Crescent Point Energy U.S. Corp
Ute Tribal 4-23-3-1W-H1
Natural Gas Burner Detail Sheet

Equipment ID	HT-1			
Source Description	Heater Treater #1			
Equipment Usage	1 MMBtu/hr Heater Treater			
Equipment Make		Potential operation	8760	hr/yr
Equipment Model	Assumption 1	Potential fuel usage	7.60	MMscf/yr
Serial Number	N/A	Assumption 1	867.0	scf/hr
				Assumption 1
Fuel Type	Field Gas	1 Metric Ton =	2204.62	pounds
Net Fuel Heating Value	1153 Btu/scf	1 Kilogram =	2.20462	pounds
Fuel Heating Value-Avg	1153 Btu/scf	Fuel Heating Value-Producing	1153.4	Btu/scf
Heat Input	1.00 MMBtu/hr	Exit Temperature	400	deg F
Permit Status		Volume Flow Rate	180	ft^3/min Assumption 3
Burner Efficiency	80 %	Assumption 2 iciency	0	%

Potential Emissions

Pollutant	Emission Factor (lb/MMscf)	Nominal Rating (MMBtu/hr)	Hrs of Operation (hrs/yr)	Estimated Emissions (lb/hr)	Estimated Emissions (tpy)	Source of Emission Factor
NOx	100.00	1.00	8,760	0.11	0.47	AP-42 Table 1.4-1
CO	84.00	1.00	8,760	0.09	0.40	AP-42 Table 1.4-1
TOC	11.00	1.00	8,760	0.01	0.05	AP-42 Table 1.4-2
VOC	5.50	1.00	8,760	0.01	0.03	AP-42 Table 1.4-2
SO_2	0.00	1.00	8,760	0.00	0.00	Gas Analysis
$PM/PM_{10}/PM_{2.5}$	7.60	1.00	8,760	0.01	0.04	AP-42 Table 1.4-2
HAPs	NA	1.00	8,760	0.00	0.01	Summary of HAPs
Benzene	2.10E-03	1.00	8,760	0.00	0.00	AP-42 Table 1.4-3
Toluene	3.40E-03	1.00	8,760	0.00	0.00	AP-42 Table 1.4-3
n-Hexane	1.80E+00	1.00	8,760	0.00	0.01	AP-42 Table 1.4-3
Formaldehyde	7.50E-02	1.00	8,760	0.00	0.00	AP-42 Table 1.4-3

Pollutant	Emission Factor (kg CO_2/MMBtu)	Nominal Rating (MMBtu/hr)	Hrs of Operation (hrs/yr)	Estimated Emissions (lb/hr)	Estimated Emissions metric tons per year (MTPY)	Source of Emission Factor
CH_4	1.00E-03	1.00	8,760	0.00	0.01	Title 40, Part 98, Subpart C, Table C-2
CO_2	53.06	1.00	8,760	116.98	464.81	Title 40, Part 98, Subpart C, Table C-1
N_2O	1.00E-04	1.00	8,760	0.00	0.00	Title 40, Part 98, Subpart C, Table C-2

Natural gas burner emissions for criteria pollutants can be estimated using the following equation:

$$E_X = \frac{EF_X \times BR \times 10^6 \times HO}{\frac{B_{EFF}}{100} \times HV_{Avg} \times 10^6 \times 2000} \times \frac{HV_{Prod}}{HV_{Avg}} \times \left(\frac{(100 - DRE)}{100} \right)$$

where:
E_X = emissions for pollutant X (tpy);
EF_X = emission factor for pollutant X (lb/MMscf);
BR = burner rating (MMBtu/hr);
B_{Eff} = burner efficiency (%);
HO = annual hours of operation (hr/yr);
HV_{Avg} = average gas heating value (Btu/scf);
HV_{Prod} = produced gas heating value (Btu/scf);
DRE = destruction and removal efficiency (%);
1-ton = 2000-lb;
1-MMBtu = 10^6-Btu; and
1-MMscf = 10^6-scf.

Natural gas burner emissions for GHG pollutants can be estimated using the following equation:

$$CO_2 = 1 \times 10^{-3} \times \text{Fuel Consumption} \times \text{Heating Value} \times \text{Emission Factor}$$

where:
CO_2 = Annual CO_2 mass emissions for natural gas combustion
Fuel Consumption = Annual fuel consumption in MMscf per year.
Heating Value = Heating value of natural gas in Btu per scf.
Emission Factor = in kilograms (kg) CO2 per MMBtu.

Crescent Point Energy U.S. Corp
Ute Tribal 4-23-3-1W-H1
Loadout Emissions Detail Sheet

Source ID Number	OL	Potential operation	2948.1	hr/yr
Source Description	Truck Loading	Max. Daily rate of bbl	1050.0	bbl
Source Usage	Oil Loadout			

Assumption 7

Potential Emissions

4.52	tpy VOC	24.75	lb/day VOC	See Calc. Below

Estimated Fugitive Emissions (See AP-42 Section 5.2)

Molecular Weight of Vapors, MW	45.41	lb/lb-mol	From facility oil sample analysis
True Vapor Pressure, Pva @ T	1.00	psia	at T=145 for RVP 0.20
Crude Oil Temperature	145	F	Heated temperature of storage tanks
	605	R	
Saturation Factor	0.6		Dedicated service, submerged loading. AP-42, Table 5.2-1.
Efficiency of controlled loading (%)	0.0%		
Annual throughput, v	16,097	1000 gallons of Condensed Hydrocarbon Liquid	
Loading losses, L @ tank	0.56	lb/1000 gallons	Emission Factor and equation from AP-42, Chapter 5.2.
L = 12.46 S P MW / T (1-eff)			
Annual losses @ tank, L*v	9,032.27	lb/yr	
Loading Rate	5,460	gallons/hr	One 130-bbl truck loaded in one hour.
Annual Hrs of Operation	2948.1	hr/yr	
Hourly VOC During Loading	**3.06**	**lb/hr**	
Annual VOC tpy during loading	**4.52**	**tons/yr**	

			Ratio of HAPs to VOC Emissions	(see "Flash Gas Tank Emissions Summary Detail Sheet")
Annual HAPs tpy during loading	0.26	tons/yr	5.8370%	
Annual Benzene tpy during loading	0.01	tons/yr	0.2859%	
Annual Toluene tpy during loading	0.01	tons/yr	0.2496%	
Annual Ethylbenzene tpy during loading	0.00	tons/yr	0.0168%	
Annual Xylene tpy during loading	0.00	tons/yr	0.0747%	
Annual n-Hexane tpy during loading	0.24	tons/yr	5.2100%	
Annual Methane (CH4) tpy during loading	0.69	tons/yr	15.2952%	
Annual Carbon Dioxide (CO_2) tpy during loading	0.06	tons/yr	1.3745%	

Crescent Point Energy U.S. Corp
Ute Tribal 4-23-3-1W-H1
Fugitive VOC Detail Sheet

Source ID Number	FUG	Source Location Zone	12
Source Description	Piping Fugitives Equipment Piping	Potential operation	8,760 hr/yr

From AP-42, TABLE 2-4. OIL AND GAS PRODUCTION OPERATIONS AVERAGE EMISSION FACTORS

Estimated counts based on a typical process diagram.

Potential fugitive emissions must be calculated based on 8760-hrs/yr.

From Low Pressure Gas Analysis

Potential Emissions

Equipment Type	TOC Emission Factor [1] (lb/hr/source)	Source Count [2]	Hours of Operation	Control Factor (Percent)	Total HC Emission Rate (lb/hr)	Total HC Emission Rate (tpy)	Percent VOC	Total VOC Emission Rate (lb/hr)	Total VOC Emission Rate (tpy)
Valves-Gas/Vapor	0.009920	7	8,760	0.00%	0.07	0.30	10.64%	0.01	0.03
Valves-Light Oil	0.005510	10	8,760	0.00%	0.06	0.24	100.00%	0.06	0.24
Valves-Heavy Oil	0.000019	0	8,760	0.00%	0.00	0.00		0.00	0.00
Valves-Water	0.000216	10	8,760	0.00%	0.00	0.01	50.00%	0.00	0.00
Relief Valves	0.019400	0	8,760	0.00%	0.00	0.00	10.64%	0.00	0.00
Pump Seals-Gas/Vapor	0.019400	3	8,760	0.00%	0.06	0.25	10.64%	0.01	0.03
Pump Seals-Light Oil	0.028700	0	8,760	0.00%	0.00	0.00	100.00%	0.00	0.00
Pump Seals-Heavy Oil	0.000071	0	8,760	0.00%	0.00	0.00		0.00	0.00
Sample Connections	0.019400	0	8,760	0.00%	0.00	0.00	100.00%	0.00	0.00
Open-Ended Lines	0.004410	0	8,760	0.00%	0.00	0.00		0.00	0.00
Other - Hatch, Gas/Vapor	0.019467	2	8,760	0.00%	0.04	0.17	10.64%	0.00	0.02
Other - Hatch, Light Oil	0.016535	2	8,760	0.00%	0.03	0.14	100.00%	0.03	0.14
Other - Hatch, Heavy Oil	0.000071	0	8,760	0.00%	0.00	0.00		0.00	0.00
Other - Hatch, Water	0.030865	2	8,760	0.00%	0.06	0.27	50.00%	0.03	0.14
Connectors - Gas/Vapors	0.000440	10	8,760	0.00%	0.00	0.02	10.64%	0.00	0.00
Connectors - Light Oil	0.000463	15	8,760	0.00%	0.01	0.03	100.00%	0.01	0.03
Connectors - Heavy Oil	0.000017	0	8,760	0.00%	0.00	0.00		0.00	0.00
Connectors - Water	0.000243	15	8,760	0.00%	0.00	0.02	50.00%	0.00	0.01
Flanges-Gas/Vapor	0.000860	11	8,760	0.00%	0.01	0.04	10.64%	0.00	0.00
Flanges-Heavy Oil	0.000001	0	8,760	0.00%	0.00	0.00		0.00	0.00
Flanges-Light Oil	0.000243	16	8,760	0.00%	0.00	0.02	100.00%	0.00	0.02
Flanges-Water	0.000006	16	8,760	0.00%	0.00	0.00	50.00%	0.00	0.00
Totals		**119**			**0.35**	**1.52**		**0.15**	**0.67**

[1] Oil and gas production operations equipment leak emission factors (from OAQPS TTN BBS)
[2] Source counts estimated from 40 CFR Part 98, Subpart W, Table W-1C and are not site-specific.

VOC and HAP fugitive emissions can be estimated using the following equation:

$$E_X = \frac{[(EF_{C1} \times \#_{C1}) + (EF_{C2} \times \#_{C2}) + ...(EF_{Cn} \times \#_{Cn})] \times 8760}{2000} \times WF_X$$

where:
E_X = emissions for pollutant *X* (tpy);
EF_{C1}, EF_{C2} …EF_{Cn} = emission factor for component C1, C2, …Cn (lb/hr/component);
$\#_{C1}$, $\#_{C2}$ …$\#_{Cn}$ = number of C1, C2, …Cn components;
WF_X = weight fraction of pollutant *X* (wt W/wt TOC);
1-year = 8760-hr; and
1-ton = 2000-lb.

Crescent Point Energy U.S. Corp
Ute Tribal 4-23-3-1W-H1
Fugitive HAP and Greenhouse Gases (GHG) Detail Sheet

Source ID Number	FUG		
Source Description	Piping Fugitives	Potential operation	8,760 hr/yr

Potential Emissions

Equipment Type	Total Emission Rate (lb/hr)	Total Emission Rate (tpy)
All-Gas/Vapor	0.02	0.08
All-Light Liquids	0.10	0.43
All-Heavy Oil	0.00	0.00
All-Water	0.03	0.15
Total VOC Emissions	**0.15**	**0.67**
TOC Emissions	**0.35**	**1.52**

Potential Emissions

Equipment Type	Emission Factor Gas[1]	Emission Factor Light Oil[2]	Total Emission Rate (lb/hr)	Total Emission Rate (tpy)
	Weight Percent (%wt)			
Benzene	0.023%	0.1383%	0.000	0.00108
Toluene	0.026%	0.121%	0.000	0.00098
Ethylbenzene	0.003%	0.008%	0.000	0.00007
Xylene	0.013%	0.036%	0.000	0.00033
N-Hexane	0.400%	2.521%	0.004	0.01945
Methane (CH_4)	58.680%	12.420%	0.247	1.081
Carbon dioxide (CO_2)	0.956%	0.665%	0.000	0.000
Nitrous oxide (N_2O)	n/a	n/a	n/a	n/a
Totals	**0.005**	**0.028**	**0.005**	**0.022**

[1] Gas weight percentage from representative gas analysis (see attached sheet).
[2] Light liquid weight percentage from representative oil analysis (see attached sheet).

Crescent Point Energy U.S. Corp
Ute Tribal 4-23-3-1W-H1

Pumpjack Engine Detail Sheet - Uncontrolled

Engine Build Year:	Post 1/1/2011	**Rebuild Year:**	Not applicable
Engine Make & Model:	Doosan D11.1L	**Engine Type:**	4-stroke Rich burn
Total Horsepower:	301	**Heat Rating:**	2.136 MMBtu/hr

Given

Fuel Usage	44.45	MCFD	
Fuel Usage	16.22	MMCF/YR	
NOx Emission Factor	1.00	g/hp-hr	*40 CFR Part 60, Subpart JJJJ*
CO Emission Factor	2.00	g/hp-hr	*40 CFR Part 60, Subpart JJJJ*
Total PM Emission Factor	9.91E-03	lb/MMBtu	*AP-42 - Table 3.2-3 - 4-stroke rich-burn engines*
Total $PM_{10}/PM_{2.5}$ Emission Factor	9.50E-03	lb/MMBtu	*AP-42 - Table 3.2-3 - 4-stroke rich-burn engines*
VOC Emission Factor	3.58E-01	lb/MMBtu	*AP-42 - Table 3.2-3 - 4-stroke rich-burn engines*
Sulfur Emission Factor	0	lb/MMBtu	*No hydrogen sulfide indicated in gas analysis.*
Formaldehyde Emission Factor	2.05E-02	lb/MMBtu	*AP-42 - Table 3.2-3 - 4-stroke rich-burn engines*
Acetaldehyde Emission Factor	2.79E-03	lb/MMBtu	*AP-42 - Table 3.2-3 - 4-stroke rich-burn engines*
Acrolein Emission Factor	2.63E-03	lb/MMBtu	*AP-42 - Table 3.2-3 - 4-stroke rich-burn engines*
Benzene Emission Factor	1.58E-03	lb/MMBtu	*AP-42 - Table 3.2-3 - 4-stroke rich-burn engines*
Methanol Emission Factor	3.06E-03	lb/MMBtu	*AP-42 - Table 3.2-3 - 4-stroke rich-burn engines*
Methane (CH_4) Emission Factor	1.00E-03	kg CO_2/MMBtu	*40 CFR Part 98, Subpart C, Table C-2*
Carbon Dioxide (CO_2) Emission Factor	53.06	kg CO_2/MMBtu	*40 CFR Part 98, Subpart C, Table C-1*
Nitrous Oxide (N_2O) Emission Factor	1.00E-04	kg CO_2/MMBtu	*40 CFR Part 98, Subpart C, Table C-2*
Engine Rating	301	hp	
% runtime in field	100%		
Produced Gas Heating Value (HHV)	1153	Btu/scf	Assumption 1
Fuel Consumption Rate (Btu/hp-hr)	7097	Btu/hp-hr	
Conversion Factor	2204.62	lb/metric ton	
Conversion Factor	1.10231	metric ton/std. ton	
Conversion Factor	0.90718	std. ton/metric ton	
Conversion Factor	24	hr/day	
Conversion Factor	1000000	Btu/MMBtu	
Conversion Factor	8760	hr/yr	
Conversion Factor	2000	lb/std. ton	
Conversion Factor	454	g/lb	

Calculations

	Emissions (Uncontrolled)	
Pollutant	lb/hr	tons/year
NOx	0.66	2.90
CO	1.33	5.81
VOC	7.65E-01	3.35E+00
PM	2.12E-02	9.27E-02
PM_{10}	2.03E-02	8.89E-02
$PM_{2.5}$	2.03E-02	8.89E-02
SO_2	0.00E+00	0.00E+00
HAPs	6.53E-02	2.86E-01
Formaldehyde	4.38E-02	1.92E-01
Acetaldehyde	5.96E-03	2.61E-02
Acrolein	5.62E-03	2.46E-02
Benzene	3.38E-03	1.48E-02
Methanol	6.54E-03	2.86E-02
	lb/hr	metric tons/year
CH_4	0.00	0.02
CO_2	249.89	992.92
N_2O	0.00	0.00

Equations

Pollutant Emission Rate = Emission Factor x Engine Rating x Conversion Factor

$PM/PM_{10}/PM_{2.5}$ Emission Rate = Emission Factor x Fuel Usage x Fuel Heating Value x Conversion Factors

Crescent Point Energy U.S. Corp
Ute Tribal 4-23-3-1W-H1

Pumpjack Engine Detail Sheet - Controlled

Engine Build Year:	Post 1/1/2011	**Rebuild Year:**	Not applicable
Engine Make & Model:	Doosan D11.1L	**Engine Type:**	4-stroke Rich burn
Total Horsepower:	301	**Heat Rating:**	2.136 MMBtu/hr

Given

Fuel Usage	44.45	MCFD	
Fuel Usage	16.22	MMCF/YR	
NOx Emission Factor	1.00	g/hp-hr	*40 CFR Part 60, Subpart JJJJ*
CO Emission Factor	2.00	g/hp-hr	*40 CFR Part 60, Subpart JJJJ*
Total PM Emission Factor	1.94E-02	lb/MMBtu	*AP-42 - Table 3.2-3 - 4-stroke rich-burn engines*
Total $PM_{10}/PM_{2.5}$ Emission Factor	9.50E-03	lb/MMBtu	*AP-42 - Table 3.2-3 - 4-stroke rich-burn engines*
VOC Emission Factor	7.00E-01	g/hp-hr	*40 CFR Part 60, Subpart JJJJ*
Sulfur Emission Factor	0	lb/MMBtu	*No hydrogen sulfide indicated in gas analysis.*
Formaldehyde Emission Factor	1.03E-02	lb/MMBtu	*Catalyst Spec & AP-42 - Table 3.2-3 - 4-stroke rich-burn engines*
Acetaldehyde Emission Factor	1.40E-03	lb/MMBtu	*Catalyst Spec & AP-42 - Table 3.2-3 - 4-stroke rich-burn engines*
Acrolein Emission Factor	1.32E-03	lb/MMBtu	*Catalyst Spec & AP-42 - Table 3.2-3 - 4-stroke rich-burn engines*
Benzene Emission Factor	7.90E-04	lb/MMBtu	*Catalyst Spec & AP-42 - Table 3.2-3 - 4-stroke rich-burn engines*
Methanol Emission Factor	1.53E-03	lb/MMBtu	*Catalyst Spec & AP-42 - Table 3.2-3 - 4-stroke rich-burn engines*
Methane (CH_4) Emission Factor	1.00E-03	kg CO_2/MMBtu	*40 CFR Part 98, Subpart C, Table C-2*
Carbon Dioxide (CO_2) Emission Factor	53.06	kg CO_2/MMBtu	*40 CFR Part 98, Subpart C, Table C-1*
Nitrous Oxide (N_2O) Emission Factor	1.00E-04	kg CO_2/MMBtu	*40 CF[illegible]part C, Table C-2*
Engine Rating	301	hp	
% runtime in field	100%		
Produced Gas Heating Value (HHV)	1153	Btu/scf	
Fuel Consumption Rate (Btu/hp-hr)	7097	Btu/hp-hr	
Conversion Factor	2204.62	lb/metric ton	
Conversion Factor	1.10231	metric ton/std. ton	
Conversion Factor	0.90718	std. ton/metric ton	
Conversion Factor	24	hr/day	
Conversion Factor	1000000	Btu/MMBtu	
Conversion Factor	8760	hr/yr	
Conversion Factor	2000	lb/std. ton	
Conversion Factor	454	g/lb	

Assumption 1

Calculations

Pollutant	Emissions (Controlled)	
	lb/hr	tons/year
NO_X	0.66	2.90
CO	1.33	5.81
VOC	4.64E-01	2.03E+00
PM	4.15E-02	1.82E-01
PM_{10}	2.03E-02	8.89E-02
$PM_{2.5}$	2.03E-02	8.89E-02
SO_2	0.00E+00	0.00E+00
HAPs	3.26E-02	1.43E-01
Formaldehyde	2.19E-02	9.59E-02
Acetaldehyde	2.98E-03	1.31E-02
Acrolein	2.81E-03	1.23E-02
Benzene	1.69E-03	7.39E-03
Methanol	3.27E-03	1.43E-02
	lb/hr	metric tons/year
CH_4	0.00	0.02
CO_2	249.89	992.92
N_2O	0.00	0.00

Equations

Pollutant Emission Rate = Emission Factor x Engine Rating x Conversion Factor

$PM/PM_{10}/PM_{2.5}$ Emission Rate = Emission Factor x Fuel Usage x Fuel Heating Value x Conversion Factors

Crescent Point Energy U.S. Corp
Ute Tribal 4-23-3-1W-H1

Pumpjack Engine Detail Sheet - Uncontrolled

Engine Build Year:	Post 1/1/2011	**Rebuild Year:**	Not applicable
Engine Make & Model:	Doosan D14.6L	**Engine Type:**	4-stroke Rich burn
Total Horsepower:	449	**Heat Rating:**	3.209 MMBtu/hr

Given

Fuel Usage	66.76	MCFD	
Fuel Usage	24.37	MMCF/YR	
NOx Emission Factor	1.00	g/hp-hr	*Manufacturer Spec*
CO Emission Factor	2.00	g/hp-hr	*Manufacturer Spec*
Total PM Emission Factor	1.94E-02	lb/MMBtu	*AP-42 - Table 3.2-3 - 4-stroke rich-burn engines*
Total $PM_{10}/PM_{2.5}$ Emission Factor	9.50E-03	lb/MMBtu	*AP-42 - Table 3.2-3 - 4-stroke rich-burn engines*
VOC Emission Factor	3.58E-01	lb/MMBtu	*AP-42 - Table 3.2-3 - 4-stroke rich-burn engines*
Sulfur Emission Factor	0	lb/MMBtu	*No hydrogen sulfide indicated in gas analysis.*
Formaldehyde Emission Factor	2.05E-02	lb/MMBtu	*AP-42 - Table 3.2-3 - 4-stroke rich-burn engines*
Acetaldehyde Emission Factor	2.79E-03	lb/MMBtu	*AP-42 - Table 3.2-3 - 4-stroke rich-burn engines*
Acrolein Emission Factor	2.63E-03	lb/MMBtu	*AP-42 - Table 3.2-3 - 4-stroke rich-burn engines*
Benzene Emission Factor	1.58E-03	lb/MMBtu	*AP-42 - Table 3.2-3 - 4-stroke rich-burn engines*
Methanol Emission Factor	3.06E-03	lb/MMBtu	*AP-42 - Table 3.2-3 - 4-stroke rich-burn engines*
Methane (CH_4) Emission Factor	1.00E-03	kg CO_2/MMBtu	*40 CFR Part 98, Subpart C, Table C-2*
Carbon Dioxide (CO_2) Emission Factor	53.06	kg CO_2/MMBtu	*40 CFR Part 98, Subpart C, Table C-1*
Nitrous Oxide (N_2O) Emission Factor	1.00E-04	kg CO_2/MMBtu	*40 CFR Part 98, Subpart C, Table C-2*
Engine Rating	449	hp	
% runtime in field	100%		Assumption 1
Produced Gas Heating Value (HHV)	1153	Btu/scf	
Fuel Consumption Rate (Btu/hp-hr)	7146	Btu/hp-hr	
Conversion Factor	2204.62	lb/metric ton	
Conversion Factor	1.10231	metric ton/std. ton	
Conversion Factor	0.90718	std. ton/metric ton	
Conversion Factor	24	hr/day	
Conversion Factor	1000000	Btu/MMBtu	
Conversion Factor	8760	hr/yr	
Conversion Factor	2000	lb/std. ton	
Conversion Factor	454	g/lb	

Calculations

Pollutant	Emissions (Uncontrolled)	
	lb/hr	tons/year
NOx	0.99	4.33
CO	1.98	8.66
VOC	1.15E+00	5.03E+00
PM	6.23E-02	2.73E-01
PM_{10}	3.05E-02	1.34E-01
$PM_{2.5}$	3.05E-02	1.34E-01
SO_2	0.00E+00	0.00E+00
HAPs	9.81E-02	4.29E-01
Formaldehyde	6.58E-02	2.88E-01
Acetaldehyde	8.95E-03	3.92E-02
Acrolein	8.44E-03	3.70E-02
Benzene	5.07E-03	2.22E-02
Methanol	9.82E-03	4.30E-02
	lb/hr	metric tons/year
CH_4	0.01	0.03
CO_2	375.33	1491.35
N_2O	0.00	0.00

Equations

Pollutant Emission Rate = Emission Factor x Engine Rating x Conversion Factor

$PM/PM_{10}/PM_{2.5}$ Emission Rate = Emission Factor x Fuel Usage x Fuel Heating Value x Conversion Factors

Crescent Point Energy U.S. Corp
Ute Tribal 4-23-3-1W-H1

Pumpjack Engine Detail Sheet - Controlled

Engine Build Year:	Post 1/1/2011	**Rebuild Year:**	Not applicable
Engine Make & Model:	Doosan D14.6L	**Engine Type:**	4-stroke Rich burn
Total Horsepower:	449	**Heat Rating:**	3.209 MMBtu/hr

Given

Fuel Usage	66.76	MCFD	
Fuel Usage	24.37	MMCF/YR	
NOx Emission Factor	1.00	g/hp-hr	*40 CFR Part 60, Subpart JJJJ*
CO Emission Factor	2.00	g/hp-hr	*40 CFR Part 60, Subpart JJJJ*
Total PM Emission Factor	1.94E-02	lb/MMBtu	*AP-42 - Table 3.2-3 - 4-stroke rich-burn engines*
Total $PM_{10}/PM_{2.5}$ Emission Factor	9.50E-03	lb/MMBtu	*AP-42 - Table 3.2-3 - 4-stroke rich-burn engines*
VOC Emission Factor	7.00E-01	g/hp-hr	*40 CFR Part 60, Subpart JJJJ*
Sulfur Emission Factor	0	lb/MMBtu	*No hydrogen sulfide indicated in gas analysis.*
Formaldehyde Emission Factor	2.05E-02	lb/MMBtu	*AP-42 - Table 3.2-3 - 4-stroke rich-burn engines*
Acetaldehyde Emission Factor	2.79E-03	lb/MMBtu	*AP-42 - Table 3.2-3 - 4-stroke rich-burn engines*
Acrolein Emission Factor	2.63E-03	lb/MMBtu	*AP-42 - Table 3.2-3 - 4-stroke rich-burn engines*
Benzene Emission Factor	1.58E-03	lb/MMBtu	*AP-42 - Table 3.2-3 - 4-stroke rich-burn engines*
Methanol Emission Factor	3.06E-03	lb/MMBtu	*AP-42 - Table 3.2-3 - 4-stroke rich-burn engines*
Methane (CH_4) Emission Factor	1.00E-03	kg CO_2/MMBtu	*40 CFR Part 98, Subpart C, Table C-2*
Carbon Dioxide (CO_2) Emission Factor	53.06	kg CO_2/MMBtu	*40 CFR Part 98, Subpart C, Table C-1*
Nitrous Oxide (N_2O) Emission Factor	1.00E-04	kg CO_2/MMBtu	*40 CFR Part 98, Subpart C, Table C-2*
Engine Rating	449	hp	
% runtime in field	100%		Assumption 1
Produced Gas Heating Value (HHV)	1153	Btu/scf	
Fuel Consumption Rate (Btu/hp-hr)	7146	Btu/hp-hr	
Conversion Factor	2204.62	lb/metric ton	
Conversion Factor	1.10231	metric ton/std. ton	
Conversion Factor	0.90718	std. ton/metric ton	
Conversion Factor	24	hr/day	
Conversion Factor	1000000	Btu/MMBtu	
Conversion Factor	8760	hr/yr	
Conversion Factor	2000	lb/std. ton	
Conversion Factor	454	g/lb	

Calculations

	Emissions (Controlled)	
Pollutant	lb/hr	tons/year
NOx	0.99	4.33
CO	1.98	8.66
VOC	6.92E-01	3.03E+00
PM	6.23E-02	2.73E-01
PM_{10}	3.05E-02	1.34E-01
$PM_{2.5}$	3.05E-02	1.34E-01
SO_2	0.00E+00	0.00E+00
HAPs	9.81E-02	4.29E-01
Formaldehyde	6.58E-02	2.88E-01
Acetaldehyde	8.95E-03	3.92E-02
Acrolein	8.44E-03	3.70E-02
Benzene	5.07E-03	2.22E-02
Methanol	9.82E-03	4.30E-02
	lb/hr	metric tons/year
CH_4	0.01	0.03
CO_2	375.33	1491.35
N_2O	0.00	0.00

Equations

Pollutant Emission Rate = Emission Factor x Engine Rating x Conversion Factor

$PM/PM_{10}/PM_{2.5}$ Emission Rate = Emission Factor x Fuel Usage x Fuel Heating Value x Conversion Factors

Narrative Description

Produced fluids are pumped from the well, the Ute Tribal 4-23-3-1W-H1, using a 301-hp Doosan D11.1L engine, or a 449-hp Doosan D14.6L engine, or an equivalent engine. The produced fluids are routed to a heater-treater. The well heater-treater operates at an average temperature and pressure of 158 degrees Fahrenheit and 40 psi.

From the dedicated heater-treater, the oil phase is directed to up to three 1,000-bbl atmospheric aboveground storage tanks. The water phase is piped to one 1,000-bbl atmospheric aboveground storage tank. Hydrocarbon vapors are vented from the oil storage tanks to the combustor(s) (COMBUSTOR) when required by Federal, State or local regulation; combustor may be removed at such time as oil production and resultant tank emissions allow. Crude oil and produced water are transferred from the storage tanks to tanker trucks for transportation from the site.

Gas from the heater-treater is routed into the fuel line to be used by the heaters, the combustor pilot light, or engine or it is routed to a sales gas pipeline. Fugitive emissions are emitted from the various components (flanges, connectors, etc.) at the site.

Equipment list, including control devices, etc.

	Description	Unique ID
1)	3 1,000-bbl Crude Oil Tanks	T1, T2, T3
2)	1 1,000-bbl Produced Water Tank(s)	PW-1
3)	1 MMBtu/hr Heater/treater	HT-1
4)	4 Tank Heaters (0.5 MMBtu/hr each)	HEAT-1, HEAT-2, HEAT-3, HEAT-4
5)	Oil Tank Truck Loading	OL
6)	Fugitive Emissions	FUG
7)	Engine(s)	ENGINE(S)
8)	55-gallon glycol drum tank	GT1
9)	55-gallon methanol drum tank	MT1
10)	Up to 2,000 gallons of miscellaneous chemicals stored onsite and used for various downhole applications	MISC1
11)	Combustor(s)	COMBUSTOR

Type of fuel and amount used

Natural gas = used in heaters, flare pilot light(s), and pumpjack engine.

Heaters use =	22.79	MMscf/year
Engine uses =	24.37	MMscf/year
Combustor uses =	3.61	MMscf/year (includes pilot light gas and tank vented emissions)

Type Raw Materials used

Flash gas from all storage tanks routed to the flare.
Oil and produced water moved offsite via trucks.
Natural gas = used in heaters, flare pilot light(s), and pumpjack engine.

Production Rates

383,250	barrels per year of oil
220.83	MMscf/year gas production (used onsite or routed to sales gas line)

Operating Schedule

24 hours per day, 7 days per week, 52 weeks per year

ATTACHMENT D

TANKS 4.0.9D EMISSION CALCULATION RESULTS

TANKS 4.0.9d
Emissions Report - Detail Format
Tank Indentification and Physical Characteristics

Identification

User Identification:	Ute Tribal 4-23-3-1W-H1
City:	Vernal
State:	Utah
Company:	Crescent Point Energy U.S. Corp
Type of Tank:	Vertical Fixed Roof Tank
Description:	Three 1,000-bbl heavy crude oil storage tanks. 16,096,500 gallons total annual throughput. 5,365,500 gallons throughput per tank.

Tank Dimensions

Shell Height (ft):		30.00
Diameter (ft):		15.50
Liquid Height (ft) :		29.76
Avg. Liquid Height (ft):		15.00
Volume (gallons):		42,000.00
Turnovers:		127.75
Net Throughput(gal/yr):		5,365,500.00
Is Tank Heated (y/n):	Y	

Paint Characteristics

Shell Color/Shade:	Gray/Light
Shell Condition	Good
Roof Color/Shade:	Gray/Light
Roof Condition:	Good

Roof Characteristics

Type:	Cone	
Height (ft)		0.10
Slope (ft/ft) (Cone Roof)		0.01

Breather Vent Settings

Vacuum Settings (psig):	0.00
Pressure Settings (psig)	0.00

Meterological Data used in Emissions Calculations: Salt Lake City, Utah (Avg Atmospheric Pressure = 12.64 psia)

TANKS 4.0.9d
Emissions Report - Detail Format
Liquid Contents of Storage Tank

Ute Tribal 4-23-3-1W-H1 - Vertical Fixed Roof Tank
Vernal, Utah

Mixture/Component	Month	Daily Liquid Surf. Temperature (deg F) Avg.	Min.	Max.	Liquid Bulk Temp (deg F)	Vapor Pressure (psia) Avg.	Min.	Max.	Vapor Mol. Weight.	Liquid Mass Fract.	Vapor Mass Fract.	Mol. Weight	Basis for Vapor Pressure Calculations
Heavy Crude Oil Category E	All	145.00	145.00	145.00	145.00	0.4197	0.4197	0.4197	45.4000			600.00	Option 4: RVP=.2

TANKS 4.0.9d
Emissions Report - Detail Format
Detail Calculations (AP-42)

Ute Tribal 4-23-3-1W-H1 - Vertical Fixed Roof Tank
Vernal, Utah

Annual Emission Calcaulations	
Standing Losses (lb):	0.0000
Vapor Space Volume (cu ft):	2,836.6684
Vapor Density (lb/cu ft):	0.0029
Vapor Space Expansion Factor:	0.0000
Vented Vapor Saturation Factor:	0.7494
Tank Vapor Space Volume:	
Vapor Space Volume (cu ft):	2,836.6684
Tank Diameter (ft):	15.5000
Vapor Space Outage (ft):	15.0333
Tank Shell Height (ft):	30.0000
Average Liquid Height (ft):	15.0000
Roof Outage (ft):	0.0333
Roof Outage (Cone Roof)	
Roof Outage (ft):	0.0333
Roof Height (ft):	0.1000
Roof Slope (ft/ft):	0.0100
Shell Radius (ft):	7.7500
Vapor Density	
Vapor Density (lb/cu ft):	0.0029
Vapor Molecular Weight (lb/lb-mole):	45.4000
Vapor Pressure at Daily Average Liquid Surface Temperature (psia):	0.4197
Daily Avg. Liquid Surface Temp. (deg. R):	604.6700
Daily Average Ambient Temp. (deg. F):	51.9625
Ideal Gas Constant R (psia cuft / (lb-mol-deg R)):	10.731
Liquid Bulk Temperature (deg. R):	604.6700
Tank Paint Solar Absorptance (Shell):	0.5400
Tank Paint Solar Absorptance (Roof):	0.5400
Daily Total Solar Insulation Factor (Btu/sqft day):	1,452.1184
Vapor Space Expansion Factor	
Vapor Space Expansion Factor:	0.0000
Daily Vapor Temperature Range (deg. R):	0.0000
Daily Vapor Pressure Range (psia):	0.0000
Breather Vent Press. Setting Range(psia):	0.0000
Vapor Pressure at Daily Average Liquid Surface Temperature (psia):	0.4197
Vapor Pressure at Daily Minimum Liquid Surface Temperature (psia):	0.4197
Vapor Pressure at Daily Maximum Liquid Surface Temperature (psia):	0.4197
Daily Avg. Liquid Surface Temp. (deg R):	604.6700
Daily Min. Liquid Surface Temp. (deg R):	604.6700
Daily Max. Liquid Surface Temp. (deg R):	604.6700
Daily Ambient Temp. Range (deg. R):	23.3583
Vented Vapor Saturation Factor	
Vented Vapor Saturation Factor:	0.7494
Vapor Pressure at Daily Average Liquid: Surface Temperature (psia):	0.4197
Vapor Space Outage (ft):	15.0333

Working Losses (lb):	733.0407
Vapor Molecular Weight (lb/lb-mole):	45.4000
Vapor Pressure at Daily Average Liquid Surface Temperature (psia):	0.4197
Annual Net Throughput (gal/yr.):	5,365,500.0000
Annual Turnovers:	127.7500
Turnover Factor:	0.4015
Maximum Liquid Volume (gal):	42,000.0000
Maximum Liquid Height (ft):	29.7552
Tank Diameter (ft):	15.5000
Working Loss Product Factor:	0.7500
Total Losses (lb):	733.0407

TANKS 4.0.9d
Emissions Report - Detail Format
Individual Tank Emission Totals

Emissions Report for: Annual

Ute Tribal 4-23-3-1W-H1 - Vertical Fixed Roof Tank
Vernal, Utah

	Losses(lbs)		
Components	Working Loss	Breathing Loss	Total Emissions
Heavy Crude Oil Category E	733.04	0.00	733.04

TANKS 4.0.9d
Emissions Report - Detail Format
Tank Indentification and Physical Characteristics

Identification

User Identification:	Crescent Point - Glycol tank
City:	Vernal
State:	Utah
Company:	Crescent Point
Type of Tank:	Horizontal Tank
Description:	55-gal drum Used smallest dimensions possible.

Tank Dimensions

Shell Length (ft):		5.00
Diameter (ft):		3.00
Volume (gallons):		265.00
Turnovers:		1.00
Net Throughput(gal/yr):		265.00
Is Tank Heated (y/n):	N	
Is Tank Underground (y/n):	N	

Paint Characteristics

Shell Color/Shade:	Gray/Light
Shell Condition	Good

Breather Vent Settings

Vacuum Settings (psig):	-0.03
Pressure Settings (psig)	0.03

Meterological Data used in Emissions Calculations: Salt Lake City, Utah (Avg Atmospheric Pressure = 12.64 psia)

TANKS 4.0.9d
Emissions Report - Detail Format
Liquid Contents of Storage Tank

Crescent Point - Glycol tank - Horizontal Tank
Vernal, Utah

Mixture/Component	Month	Daily Liquid Surf. Temperature (deg F) Avg.	Min.	Max.	Liquid Bulk Temp (deg F)	Vapor Pressure (psia) Avg.	Min.	Max.	Vapor Mol. Weight.	Liquid Mass Fract.	Vapor Mass Fract.	Mol. Weight	Basis for Vapor Pressure Calculations
Propylene glycol	All	59.41	49.72	69.11	54.20	0.0009	0.0005	0.0015	76.1100			76.11	Option 2: A=8.2082, B=2085.9, C=203.54

TANKS 4.0.9d
Emissions Report - Detail Format
Detail Calculations (AP-42)

Crescent Point - Glycol tank - Horizontal Tank
Vernal, Utah

Annual Emission Calcaulations

Standing Losses (lb):	0.0072
Vapor Space Volume (cu ft):	22.5114
Vapor Density (lb/cu ft):	0.0000
Vapor Space Expansion Factor:	0.0700
Vented Vapor Saturation Factor:	0.9999
Tank Vapor Space Volume:	
Vapor Space Volume (cu ft):	22.5114
Tank Diameter (ft):	3.0000
Effective Diameter (ft):	4.3713
Vapor Space Outage (ft):	1.5000
Tank Shell Length (ft):	5.0000
Vapor Density	
Vapor Density (lb/cu ft):	0.0000
Vapor Molecular Weight (lb/lb-mole):	76.1100
Vapor Pressure at Daily Average Liquid Surface Temperature (psia):	0.0009
Daily Avg. Liquid Surface Temp. (deg. R):	519.0816
Daily Average Ambient Temp. (deg. F):	51.9625
Ideal Gas Constant R (psia cuft / (lb-mol-deg R)):	10.731
Liquid Bulk Temperature (deg. R):	513.6725
Tank Paint Solar Absorptance (Shell):	0.5400
Daily Total Solar Insulation Factor (Btu/sqft day):	1,452.1184
Vapor Space Expansion Factor	
Vapor Space Expansion Factor:	0.0700
Daily Vapor Temperature Range (deg. R):	38.7740
Daily Vapor Pressure Range (psia):	0.0010
Breather Vent Press. Setting Range(psia):	0.0600
Vapor Pressure at Daily Average Liquid Surface Temperature (psia):	0.0009
Vapor Pressure at Daily Minimum Liquid Surface Temperature (psia):	0.0005
Vapor Pressure at Daily Maximum Liquid Surface Temperature (psia):	0.0015
Daily Avg. Liquid Surface Temp. (deg R):	519.0816
Daily Min. Liquid Surface Temp. (deg R):	509.3881
Daily Max. Liquid Surface Temp. (deg R):	528.7751
Daily Ambient Temp. Range (deg. R):	23.3583
Vented Vapor Saturation Factor	
Vented Vapor Saturation Factor:	0.9999
Vapor Pressure at Daily Average Liquid: Surface Temperature (psia):	0.0009
Vapor Space Outage (ft):	1.5000
Working Losses (lb):	0.0004
Vapor Molecular Weight (lb/lb-mole):	76.1100
Vapor Pressure at Daily Average Liquid Surface Temperature (psia):	0.0009
Annual Net Throughput (gal/yr.):	265.0000

Annual Turnovers:	1.0000
Turnover Factor:	1.0000
Tank Diameter (ft):	3.0000
Working Loss Product Factor:	1.0000

Total Losses (lb):	0.0076

TANKS 4.0.9d
Emissions Report - Detail Format
Individual Tank Emission Totals

Emissions Report for: Annual

Crescent Point - Glycol tank - Horizontal Tank
Vernal, Utah

	Losses(lbs)		
Components	Working Loss	Breathing Loss	Total Emissions
Propylene glycol	0.00	0.01	0.01

TANKS 4.0.9d
Emissions Report - Detail Format
Tank Indentification and Physical Characteristics

Identification

User Identification:	Crescent Point - Methanol tank
City:	Vernal
State:	Utah
Company:	Crescent Point
Type of Tank:	Horizontal Tank
Description:	55-gallon drum size methanol Used smallest dimensions possible. Horizontal tank

Tank Dimensions

Shell Length (ft):		5.00
Diameter (ft):		3.00
Volume (gallons):		265.00
Turnovers:		1.00
Net Throughput(gal/yr):		265.00
Is Tank Heated (y/n):	N	
Is Tank Underground (y/n):	N	

Paint Characteristics

Shell Color/Shade:	Gray/Light
Shell Condition	Good

Breather Vent Settings

Vacuum Settings (psig):	-0.03
Pressure Settings (psig)	0.03

Meterological Data used in Emissions Calculations: Salt Lake City, Utah (Avg Atmospheric Pressure = 12.64 psia)

TANKS 4.0.9d
Emissions Report - Detail Format
Liquid Contents of Storage Tank

Crescent Point - Methanol tank - Horizontal Tank
Vernal, Utah

Mixture/Component	Month	Daily Liquid Surf. Temperature (deg F) Avg.	Min.	Max.	Liquid Bulk Temp (deg F)	Vapor Pressure (psia) Avg.	Min.	Max.	Vapor Mol. Weight.	Liquid Mass Fract.	Vapor Mass Fract.	Mol. Weight	Basis for Vapor Pressure Calculations
Methyl alcohol	All	59.41	49.72	69.11	54.20	1.4156	1.0351	1.9099	32.0400			32.04	Option 2: A=7.897, B=1474.08, C=229.13

TANKS 4.0.9d
Emissions Report - Detail Format
Detail Calculations (AP-42)

Crescent Point - Methanol tank - Horizontal Tank
Vernal, Utah

Annual Emission Calcaulations

Standing Losses (lb):	8.6559
Vapor Space Volume (cu ft):	22.5114
Vapor Density (lb/cu ft):	0.0081
Vapor Space Expansion Factor:	0.1473
Vented Vapor Saturation Factor:	0.8988
Tank Vapor Space Volume:	
Vapor Space Volume (cu ft):	22.5114
Tank Diameter (ft):	3.0000
Effective Diameter (ft):	4.3713
Vapor Space Outage (ft):	1.5000
Tank Shell Length (ft):	5.0000
Vapor Density	
Vapor Density (lb/cu ft):	0.0081
Vapor Molecular Weight (lb/lb-mole):	32.0400
Vapor Pressure at Daily Average Liquid Surface Temperature (psia):	1.4156
Daily Avg. Liquid Surface Temp. (deg. R):	519.0816
Daily Average Ambient Temp. (deg. F):	51.9625
Ideal Gas Constant R (psia cuft / (lb-mol-deg R)):	10.731
Liquid Bulk Temperature (deg. R):	513.6725
Tank Paint Solar Absorptance (Shell):	0.5400
Daily Total Solar Insulation Factor (Btu/sqft day):	1,452.1184
Vapor Space Expansion Factor	
Vapor Space Expansion Factor:	0.1473
Daily Vapor Temperature Range (deg. R):	38.7740
Daily Vapor Pressure Range (psia):	0.8748
Breather Vent Press. Setting Range(psia):	0.0600
Vapor Pressure at Daily Average Liquid Surface Temperature (psia):	1.4156
Vapor Pressure at Daily Minimum Liquid Surface Temperature (psia):	1.0351
Vapor Pressure at Daily Maximum Liquid Surface Temperature (psia):	1.9099
Daily Avg. Liquid Surface Temp. (deg R):	519.0816
Daily Min. Liquid Surface Temp. (deg R):	509.3881
Daily Max. Liquid Surface Temp. (deg R):	528.7751
Daily Ambient Temp. Range (deg. R):	23.3583
Vented Vapor Saturation Factor	
Vented Vapor Saturation Factor:	0.8988
Vapor Pressure at Daily Average Liquid: Surface Temperature (psia):	1.4156
Vapor Space Outage (ft):	1.5000
Working Losses (lb):	0.2862
Vapor Molecular Weight (lb/lb-mole):	32.0400
Vapor Pressure at Daily Average Liquid Surface Temperature (psia):	1.4156
Annual Net Throughput (gal/yr.):	265.0000

Annual Turnovers:	1.0000
Turnover Factor:	1.0000
Tank Diameter (ft):	3.0000
Working Loss Product Factor:	1.0000

Total Losses (lb):	9.1421

TANKS 4.0.9d
Emissions Report - Detail Format
Individual Tank Emission Totals

Emissions Report for: Annual

Crescent Point - Methanol tank - Horizontal Tank
Vernal, Utah

	Losses(lbs)		
Components	Working Loss	Breathing Loss	Total Emissions
Methyl alcohol	0.29	8.86	9.14

ATTACHMENT E

EQUIPMENT SPECIFICATIONS

Revised: March 15, 2010

NGEngines, Inc.
1455 Michael Drive
Wood Dale, IL 60191
630-281-7107
www.ngengine.com

Zero-Hour Non-Deteriorated Emissions for Permitting Customers

GRAMS PER KW-HR

	D081NA		D081L[5&6]		D111L[5]		D146L[5]		D183L[5&6]		D219L[5]	
EPA Engine Family			APWRB8.10NGP		APWRB11.1NGP		APWRB14.6NGP		APWRB18.3NGP		APWRB21.9NGP	
Model/Fuel	8.1NA LPG	8.1NA NG	8.1LT LPG	8.1LT NG	11L LPG	11L NG	14.6L LPG	14.6L NG	18.3L LPG	18.3L NG	22L LPG	22L NG
Displacement (Liter)	8.071L		8.071L		11.051L		14.618L		18.273L		21.927L	
Rated Power (kW) @ 2000 RPM[1,2&3]			136	176	155	224	238	335	317	422	352	485
	g/KW-hr	g/KW-hr	g/KW-hr	g/KW-hr	g/KW-hr	g/KW-hr	g/KW-hr	g/KW-hr	g/KW-hr	g/KW-hr	g/KW-hr	g/KW-hr
BSCO			0.53	0.18	0.33	0.35	0.15	0.08	0.24	0.28	0.34	0.13
BSTHC			0.09	0.85	0.09	2.98	0.06	0.20	0.10	0.75	0.05	0.43
BSNMHC[7]			NA	0.02	NA	0.34	NA	0.06	NA	0.01	NA	0.01
BSNOx			0.01	0.01	0.02	0.03	0.04	0.10	0.03	0.04	0.03	0.08
BSTHC+Nox			0.11	0.85	0.11	NA	0.10	NA	0.13	NA	0.08	NA
BSNMHC+Nox			NA	0.03	NA	0.37	NA	0.16	NA	0.04	NA	0.09
BSFC (g/kw-hr)[4]			0.27	0.25	0.30	0.26	0.32	0.24	0.24	0.22	0.27	0.22

GRAMS PER HP-HR

	D081NA		D081L[5&6]		D111L[5]		D146L[5]		D183L[5&6]		D219L[5]	
EPA Engine Family	0		APWRB8.10NGP		APWRB11.1NGP		APWRB14.6NGP		APWRB18.3NGP		APWRB21.9NGP	
Model/Fuel	8.1NA LPG	8.1NA NG	8.1LT LPG	8.1LT NG	11L LPG	11L NG	14.6L LPG	14.6L NG	18.3L LPG	18.3L NG	22L LPG	22L NG
Displacement (Cubic Inch)	492.5CID		492.5CID		674.5CID		892.1CID		1115.1CID		1338.0CID	
Rated Power (hp) @ 2000 RPM[1,2&3]	0	0	183	236	208	301	319	449	425	566	472	650
	g/hp-hr	g/hp-hr	g/hp-hr	g/hp-hr	g/hp-hr	g/hp-hr	g/hp-hr	g/hp-hr	g/hp-hr	g/hp-hr	g/hp-hr	g/hp-hr
BSCO	-	-	0.39	0.13	0.25	0.26	0.11	0.06	0.18	0.21	0.25	0.10
BSTHC	-	-	0.07	0.63	0.07	2.22	0.04	0.15	0.07	0.56	0.04	0.32
BSNMHC[7]	NA	-	NA	0.02	NA	0.25	NA	0.04	NA	0.01	NA	0.00
BSNOx	-	-	0.01	0.00	0.01	0.02	0.03	0.07	0.02	0.03	0.02	0.06
BSTHC+Nox	-	NA	0.08	NA	0.08	NA	0.07	NA	0.10	NA	0.06	NA
BSNMHC+Nox	NA	-	NA	0.02	NA	0.28	NA	0.12	NA	0.03	NA	0.06
BSFC (g/hp-hr)[4]	-	-	0.20	0.19	0.22	0.19	0.24	0.18	0.18	0.16	0.20	0.16

NOTES

[1] Rated power is based on ISO3046 and/or ISO 8528.

[2] All ratings are gross flywheel horsepower corrected to 77°F at an altitude of 328 feet with no cooling fan or alternator losses using heating value for NG of 1015 BTU/SCF.

[3] Production tolerances in engines and installed components can account for power variations of +/- 5%. Altitude, temperature and excessive exhaust and intake restrictions should be applied to power calculations.

[4] Bsfc is based on 100% gross flywheel power rating and does not include fan or generator losses.

[5] Emissions shown are certified third-party Zero-hour data points suitable for site permitting calculations and are measured in accordance with US EPA NSPS 40CFR Part 1048

[6] Emissions shown are certified third-party Zero-hour data points suitable for site permitting calculations and are measured in accordance with US EPA NSPS 40CFR Part 60

[7] For NG, NMHC is reported in place of VOC for this report

11.1L NG ENGINE

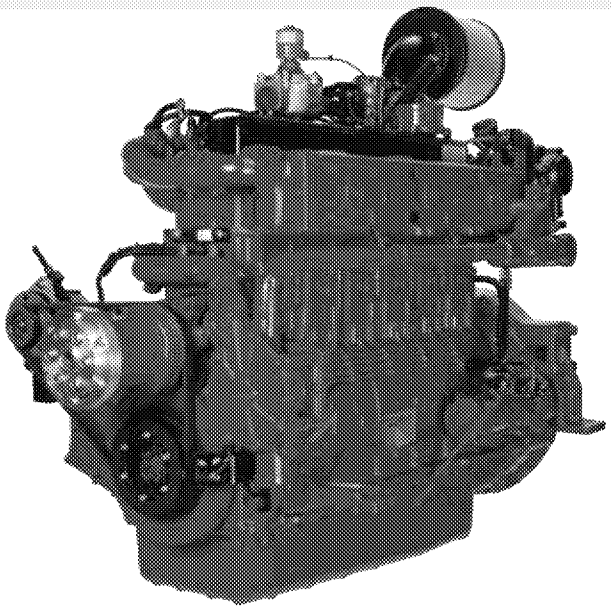

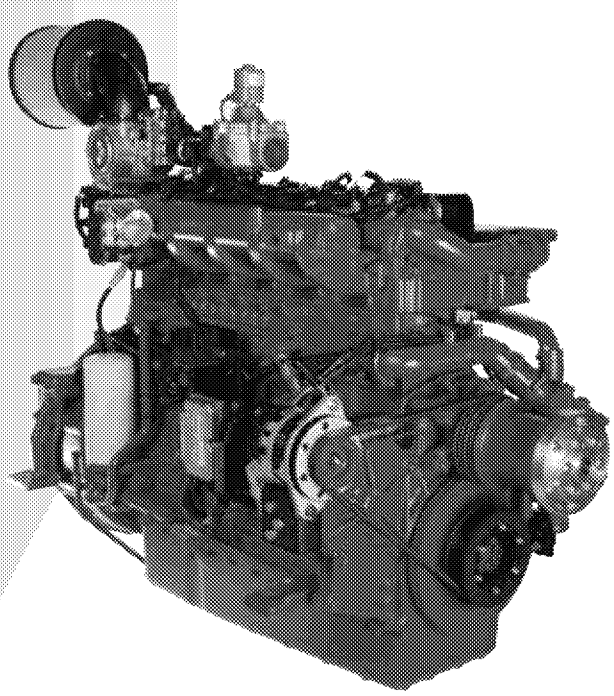

FEATURES / OPTIONS

- US –EPA Certified and CARB Compliant
- Power: 225kWm Standby on NG
- Integrated Engine Controls Protection with CANBUS
- 50c Ambient Cooling Capacity
- UL2200 Compliant or Listed Components
- MasterTrak Telematics service (included for 1 year)

DESCRIPTION

The NGE 11.1L is a US-EPA CERTIFIED Natural Gas and Propane engine. Built upon a proven marine-diesel grade block, the 6-Cylinder In-line, turbocharged and after-cooled engine features replaceable wet liners and watercooled exhaust. The engine was developed from the block-up to be a reliable and durable power unit.

Superior engine performance is provided by an ECU that integrates and coordinates all critical functions including: Governor, Variable Ingition Timing, Air:Fuel Ratio Control, Knock Suppression and Engine Protection.

NGEngines is an extension of the Power Solutions, Inc. (PSI) product line which is based upon GM blocks from 650cc to 8.1L.The NGE product lineup has 5 models with displacements of 8.1L, 11.1L, 14.6L, 18.3L and 21.9L. All PSI/NGE engines feature the same fuel systems and controls simplifying your application development and support.

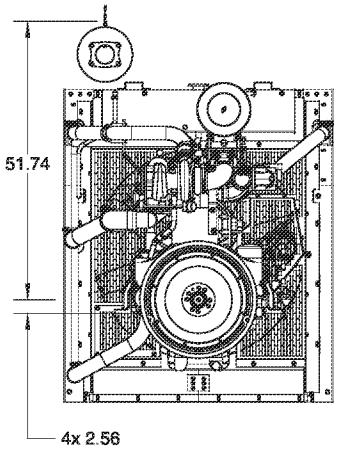

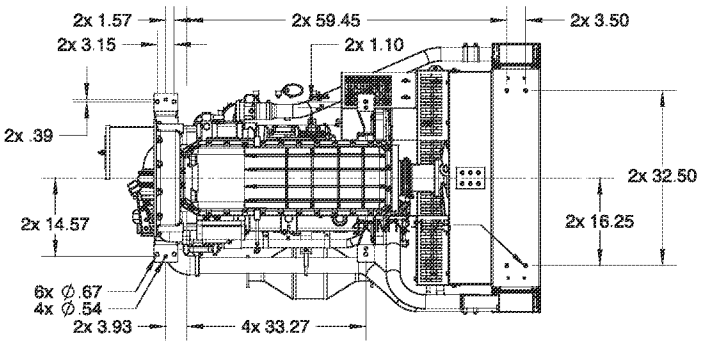

NG ENGINE

11.1L

	UNITS STD	UNITS METRIC	11.1L CAC 1500		11.1L CAC 1800	
GENERAL ENGINE MOUNTING						
Type	N/A		In-Line 4 cycle			
Number of cylinders	N/A		6			
Aspiration	N/A		Turbo Charge Air Cooled			
Bore	in	mm	4.84	123	4.84	123
Stroke	in	mm	6.1	155	6.1	155
Displacement	in^3	L	673	11.051	673	11.051
Compression Ratio	N/A		10.5			
Mean Piston Speed	ft/min	m/s	1525	7.75	1830	9.3
Rated Load	Hp	kW	251	187	302	225
MEP (@ rated Load)	psi	kPa	197	14	197	14
Rotation Viewed from Flywheel	N/A		Counter Clockwise			
Firing Order	N/A		1-5-3-6-2-4			
DRY WEIGHT						
Fan to Flywheel	lb	kg	2600	1179.3	2600	1179.3
Rad to Flywheel	lb	kg	3125	1417	3125	1417
WET WEIGHT						
Fan to Flywheel	lb	kg	2695	1206	2695	2627
Rad to Flywheel	lb	kg	3465	1577	3465	1577
CG						
Distance from FW housing	in	mm	23.82	605	23.82	605
Distance above center of crankshaft	in	mm	6.30	160	6.30	160
ENGINE MOUNTING						
Maximum Allowable Bending Moment at Rear of Block	lb ft	N m				
Moment of Inertia About Roll Axis	lb ft^2	kg m^2				
Flywheel housing	N/A		SAE No. 1			
Flywheel	N/A		No. 14			
EXHAUST SYSTEM						
Type						
Maximum allowable Back pressure	in HG	kPa	3	10.2	3	10.2
Standard Catalyst Back pressure	in HG	kPa	1.5	5.1	1.5	5.1
Exhaust Outlet Pipe Size						
Maximum Turbine Inlet Temperature	F	C	1382	750	1382	750
Exhuast Flow at Rated Power	lb/hr	kg/hr	1658	752	1874	850
Exhuast Flow at Rated Power @1350F	cfm	m^3/min	1261	35.7	1425	40.3
AIR INDUCTION SYSTEM						
Maximum allowable Intake Air Restriction with Air Cleaner						
Clean	inH2O	kPa	5	1.24	5	1.24
Dirty	inH2O	kPa	15	3.74	15	3.74
Combustion Air required	lb/hr	kg/hr	1561	708	1764	800
Combustion Air required	cfm	m^3/min	354	10.4	400	11.7
ELECTRICAL SYSTEM						
Minimum Recommended Battery Capacity	AH		150			
Cold Cranking Current						
Engine only	CCA		900			
Engine with Drive train	CCA		900			
Maximum Allowable Resistance of Starting Circuit	Ohms		0.002			
Staring Motor Power	HP	kW	9.4	7	9.4	7
Battery Charging Alternator						
Voltage	Volts		24			
Current	Amps		45			

	UNITS STD	UNITS METRIC	11.1L CAC 1500		11.1L CAC 1800	
COOLING SYSTEM						
Coolant Capacity						
Engine only	gal	L	5.5	25.0	5.5	25.0
Engine with Radiator	gal	L	32.8	149	32.8	149
Engine Coolant Flow	gal/min	L/min	69	260	82	310
Water Pump Speed	RPM		1862	0	2235	0
Heat rejected to Cooling water at rated Load	btu/min	kcal/sec	9285	39	11071	46.5
Maximum Intake Air Temperature (IAT)	F	C	155	68	155	68
ECU IAT Warning	F	C	155	69.1	155	69.1
ECU IAT Shutdown	F	C	165	74.72	165	74.72
Maximum Coolant Friction Head External to the engine	psi	bar	5.8	0.4	5.8	0.4
Maximum Air Restriction Across a Radiator	inH2O	mmH2O	0.5	12.8	0.5	12.8
Standard Thermostat Range						
Cracking Temperature	F	C	160	71	160	71
Full Open Temperature	F	C	185	85	185	85
Maximum Output Pressure of Engine Water Pump						
Maximum Allowable Pressure Cap	psi	bar	185	85	185	85
Ambient Clearance Open Genset (water)						
Specified	F	C	14.7	1	14.7	1
Ambient Clearance (Oil)						
Specified	F	C	122	50	122	50
Maximum Allowable Top Tank Temperature	F	C	230	110	230	110
ECU Warning	F	C	220	104	220	104
ECU Shutdown	F	C	230	110	230	110
Fan Power	HP	kW	8	6.0	14	10.4
Fan Diameter, including blades	in	mm	38	9		
Fan Speed	RPM		1500		1800	
Cooling Fan Air Flow @ 1" H2O Stat. Press and 125F @ Rad	CFM	m^3/min	19114	541.24	22300	631.4
Charge Air Cooler						
Compressor Outlet Temperature	F	C	234.9	114.0	254.4	125.0
Compressor Flow Rate	CFM	m^3/min	0	0.0	555	15.7
LUBRICATION SYSTEM						
Oil Specification	SAE 15W-40 Low Ash Gas engine oil (.25-.5% by wt), API CD/CF or higher					
Oil Pressure						
Idle						
Min	Psi	Bar	11	0.8	11	0.8
Max	Psi	Bar	20.3	1.4	20.3	1.4
Rated Speed						
Min	Psi	Bar	20.3	1.4	20.3	1.4
Max	Psi	Bar	70	4.8	70	4.8
Maximum Allowable Oil Temperature	F	C	230	110	230	110
Engine Oil Capacity						
Min	Qts	L	20	18.9	20	18.9
Max	Qts	L	26.5	25.1	26.5	25.1
Oil Filter Capacity	Qts	L	3.75	3.5	3.75	3.5
FUEL SYSTEM						
Low Pressure Dry Processed Natural Gas (Spec)						
Fuel Composition						
Maximum EPR Rated Pressure	psi	kPa	1	6.89	1	6.89
Maximum Running pressure to Electronic Pressure Regulator (EPR)	inH2O	kPa	11	2.74	11	2.74
Minimum Running pressure to EPR	inH2O	kPa	7	1.74	7	1.74
Minimum Gas Supply Pipe Size			2" NPT			
Low Pressure Vapor Propane (HD5)						
Fuel Composition						
Maximum EPR Rated Pressure	psi	kPa	1	6.89	1	6.89
Maximum Running Pressure to EPR	inH2O	kPa	11	2.74	11	2.74
Minimum Running Pressure to EPR	inH2O	kPa	7	1.74	7	1.74
Minimum LPG Supply Pipe Size			2" NPT			

The preceeding pipe sizes are only suggestions and piping sizes may vary with temperature, pressure, distance from supply and application of local codes. Gas must be available at adequate volume and pressure for engine at the EPR.

Revised: March 15, 2010

NGEngines, Inc.
1455 Michael Drive
Wood Dale, IL 60191
630-281-7107
www.ngengine.com

Zero-Hour Non-Deteriorated Emissions for Permitting Customers

GRAMS PER KW-HR

	D081NA		D081L[5&6]		D111L[5]		D146L[5]		D183L[5&6]		D219L[5]	
EPA Engine Family			APWRB8.10NGP		APWRB11.1NGP		APWRB14.6NGP		APWRB18.3NGP		APWRB21.9NGP	
Model/Fuel	8.1NA LPG	8.1NA NG	8.1LT LPG	8.1LT NG	11L LPG	11L NG	14.6L LPG	14.6L NG	18.3L LPG	18.3L NG	22L LPG	22L NG
Displacement (Liter)	8.071L		8.071L		11.051L		14.618L		18.273L		21.927L	
Rated Power (kW) @ 2000 RPM[1,2&3]			136	176	155	224	238	335	317	422	352	485
	g/KW-hr	g/KW-hr	g/KW-hr	g/KW-hr	g/KW-hr	g/KW-hr	g/KW-hr	g/KW-hr	g/KW-hr	g/KW-hr	g/KW-hr	g/KW-hr
BSCO			0.53	0.18	0.33	0.35	0.15	0.08	0.24	0.28	0.34	0.13
BSTHC			0.09	0.85	0.09	2.98	0.06	0.20	0.10	0.75	0.05	0.43
BSNMHC[7]			NA	0.02	NA	0.34	NA	0.06	NA	0.01	NA	0.01
BSNOx			0.01	0.01	0.02	0.03	0.04	0.10	0.03	0.04	0.03	0.08
BSTHC+Nox			0.11	0.85	0.11	NA	0.10	NA	0.13	NA	0.08	NA
BSNMHC+Nox			NA	0.03	NA	0.37	NA	0.16	NA	0.04	NA	0.09
BSFC (g/kw-hr)[4]			0.27	0.25	0.30	0.26	0.32	0.24	0.24	0.22	0.27	0.22

GRAMS PER HP-HR

	D081NA		D081L[5&6]		D111L[5]		D146L[5]		D183L[5&6]		D219L[5]	
EPA Engine Family	0		APWRB8.10NGP		APWRB11.1NGP		APWRB14.6NGP		APWRB18.3NGP		APWRB21.9NGP	
Model/Fuel	8.1NA LPG	8.1NA NG	8.1LT LPG	8.1LT NG	11L LPG	11L NG	14.6L LPG	14.6L NG	18.3L LPG	18.3L NG	22L LPG	22L NG
Displacement (Cubic Inch)	492.5CID		492.5CID		674.5CID		892.1CID		1115.1CID		1338.0CID	
Rated Power (hp) @ 2000 RPM[1,2&3]	0	0	183	236	208	301	319	449	425	566	472	650
	g/hp-hr	g/hp-hr	g/hp-hr	g/hp-hr	g/hp-hr	g/hp-hr	g/hp-hr	g/hp-hr	g/hp-hr	g/hp-hr	g/hp-hr	g/hp-hr
BSCO	-	-	0.39	0.13	0.25	0.26	0.11	0.06	0.18	0.21	0.25	0.10
BSTHC	-	-	0.07	0.63	0.07	2.22	0.04	0.15	0.07	0.56	0.04	0.32
BSNMHC[7]	NA	-	NA	0.02	NA	0.25	NA	0.04	NA	0.01	NA	0.00
BSNOx	-	-	0.01	0.00	0.01	0.02	0.03	0.07	0.02	0.03	0.02	0.06
BSTHC+Nox	-	NA	0.08	NA	0.08	NA	0.07	NA	0.10	NA	0.06	NA
BSNMHC+Nox	NA	-	NA	0.02	NA	0.28	NA	0.12	NA	0.03	NA	0.06
BSFC (g/hp-hr)[4]	-	-	0.20	0.19	0.22	0.19	0.24	0.18	0.18	0.16	0.20	0.16

NOTES

[1] Rated power is based on ISO3046 and/or ISO 8528.

[2] All ratings are gross flywheel horsepower corrected to 77°F at an altitude of 328 feet with no cooling fan or alternator losses using heating value for NG of 1015 BTU/SCF.

[3] Production tolerances in engines and installed components can account for power variations of +/- 5%. Altitude, temperature and excessive exhaust and intake restrictions should be applied to power calculations.

[4] Bsfc is based on 100% gross flywheel power rating and does not include fan or generator losses.

[5] Emissions shown are certified third-party Zero-hour data points suitable for site permitting calculations and are measured in accordance with US EPA NSPS 40CFR Part 1048

[6] Emissions shown are certified third-party Zero-hour data points suitable for site permitting calculations and are measured in accordance with US EPA NSPS 40CFR Part 60

[7] For NG, NMHC is reported in place of VOC for this report

14.6L NG ENGINE

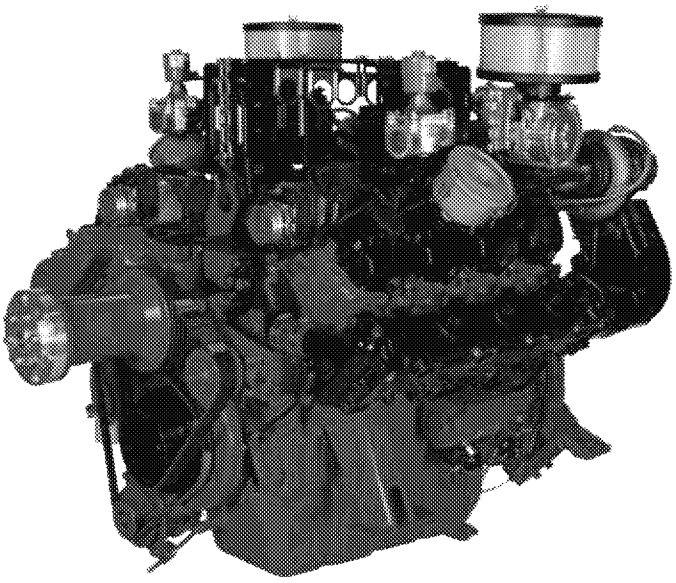

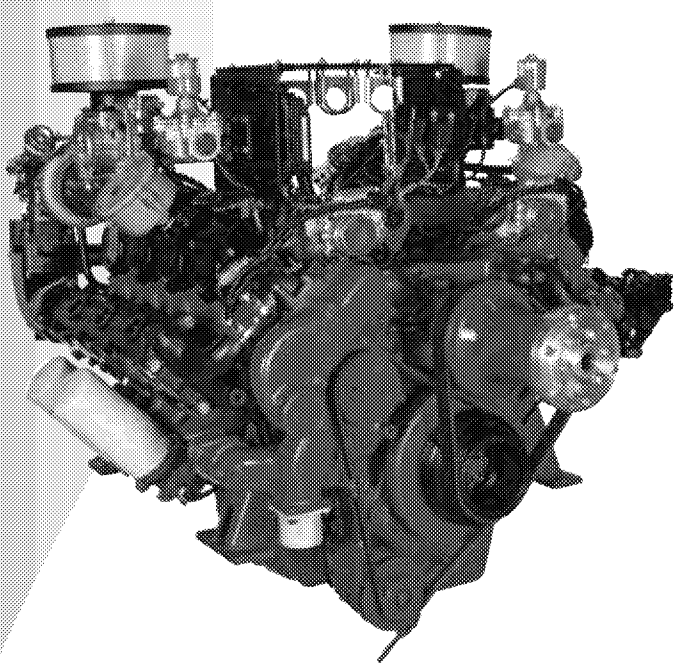

FEATURES / OPTIONS

- US –EPA Certified and CARB Compliant
- Power: 300kWm Standby on NG
- Integrated Engine Controls Protection with CANBUS
- 50c Ambient Cooling Capacity
- UL2200 Compliant or Listed Components
- MasterTrak Telematics service (included for 1 year)

DESCRIPTION

The NGE 14.6L is a US-EPA CERTIFIED Natural Gas and Propane engine. Built upon a proven marine-diesel grade block, the 8-Cylinder V, turbocharged and after-cooled engine features replaceable wet liners and watercooled exhaust. The engine was developed from the block-up to be a reliable and durable power unit.

Superior engine performance is provided by an ECU that integrates and coordinates all critical functions including: Governor, Variable Ingition Timing, Air:Fuel Ratio Control, Knock Suppression and Engine Protection.

NGEngines is an extension of the Power Solutions, Inc. (PSI) product line which is based upon GM blocks from 650cc to 8.1L.The NGE product lineup has 5 models with displacements of 8.1L, 11.1L, 14.6L, 18.3L and 21.9L. All PSI/NGE engines feature the same fuel systems and controls simplifying your application development and support.

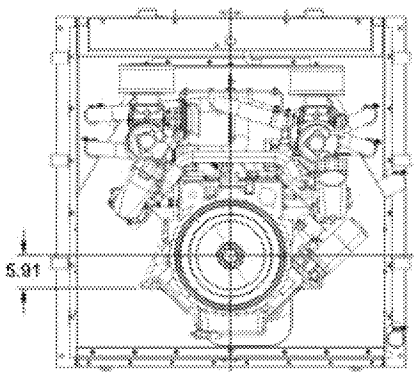

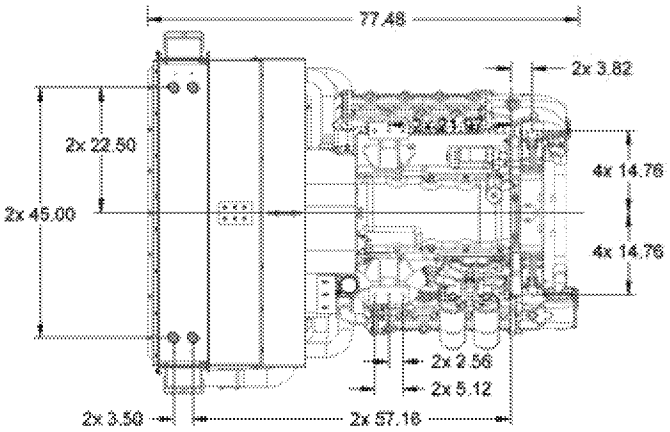

NG ENGINE

14.6L

	UNITS		14.6L CAC			
	STD	METRIC	1500		1800	
GENERAL ENGINE MOUNTING						
Type	N/A		V-type 4 cycle			
Number of cylinders	N/A		8			
Aspiration	N/A		Turbo Charge Air Cooled			
Bore	in	mm	5.04	128	5.04	128
Stroke	in	mm	5.59	142	5.59	142
Displacement	in^3	L	892	14.62	892	14.62
Compression Ratio	N/A		10.5			
Mean Piston Speed	ft/min	m/s	1397.5	7.1	1677	8.52
Rated Load	Hp	kW	339	253	402	300
MEP (@ rated Load)	psi	kPa	201	14	198	14
Rotation Viewed from Flywheel	N/A		Counter Clockwise			
Firing Order	N/A		1-5-7-2-6-3-4-8-1			
DRY WEIGHT						
Fan to Flywheel	lb	kg	3150	1429	3150	1429
Rad to Flywheel	lb	kg	4450	2018	4450	2018
WET WEIGHT						
Fan to Flywheel	lb	kg	3291	1475	3291	1475
Rad to Flywheel	lb	kg	4955	2262	4955	2262
CG						
Distance from FW housing	in	mm	6.26	159	6.26	159
Distance above center of crankshaft	in	mm	17.66	448.5	17.66	448.5
ENGINE MOUNTING						
Maximum Allowable Bending Moment at Rear of Block	lb ft	N m	0	0	0	0
Moment of Inertia About Roll Axis	lb ft^2	kg m^2	0	0	0	0
Flywheel housing	N/A		SAE No. 1			
Flywheel	N/A		No. 14			
EXHAUST SYSTEM						
Type						
Maximum allowable Back pressure	in HG	kPa	3	10.2	3	10.2
Standard Catalyst Back pressure	in HG	kPa	1.5	5.1	1.5	5.1
Exhaust Outlet Pipe Size						
Maximum Turbine Inlet Temperature	F	C	1382	750	1382	750
Exhuast Flow at Rated Power	lb/hr	kg/hr	2099	952	2492	1131
Exhuast Flow at Rated Power @1350F	cfm	m^3/min	1596	45.2	1895	53.6
AIR INDUCTION SYSTEM						
Maximum allowable Intake Air Restriction with Air Cleaner						
Clean	inH2O	kPa	5	1.24	5	1.24
Dirty	inH2O	kPa	15	3.74	15	3.74
Combustion Air required	lb/hr	kg/hr	1975	896	2346	1064
Combustion Air required	cfm	m^3/min	448	13.1	532	15.6
ELECTRICAL SYSTEM						
Minimum Recommended Battery Capacity	AH		200			
Cold Cranking Current						
Engine only	CCA		1000			
Engine with Drive train	CCA		1000			
Maximum Allowable Resistance of Starting Circuit	Ohms		0.002			
Staring Motor Power	HP	kW	9.4	7	9.4	7
Battery Charging Alternator						
Voltage	Volts		24			
Current	Amps		45			

	UNITS		14.6L CAC			
	STD	METRIC	1500		1800	
COOLING SYSTEM						
Coolant Capacity						
Engine only	gal	L	9.5	43.2	9.5	43.2
Engine with Radiator	gal	L	50	227	50	227
Engine Coolant Flow	gal/min	L/min	151	570	180	680
Water Pump Speed	RPM		0	0	0	0
Heat rejected to Cooling water at rated Load	btu/min	kcal/sec	13094	55	16189	68
Maximum Intake Air Temperature (IAT)	F	C	155	68	155	68
ECU IAT Warning	F	C	0	0	0	0
ECU IAT Shutdown	F	C	0	0	0	0
Maximum Coolant Friction Head External to the engine	psi	bar	5.8	0.4	5.8	0.4
Maximum Air Restriction Across a Radiator	inH2O	mmH2O	0.5	12.8	0.5	12.8
Standard Thermostat Range						
Cracking Temperature	F	C	160	71	160	71
Full Open Temperature	F	C	185	85	185	85
Maximum Output Pressure of Engine Water Pump						
Maximum Allowable Pressure Cap	psi	bar	14.7	1	14.7	1
Ambient Clearance Open Genset (water)						
Specified	F	C	122	50	122	50
Ambient Clearance (Oil)						
Specified	F	C	122	50	122	50
Maximum Allowable Top Tank Temperature	F	C	230	110	230	110
ECU Warning	F	C	220	104	220	104
ECU Shutdown	F	C	230	110	230	110
Fan Power	HP	kW	13	9.7	22	16.4
Fan Diameter, including blades	in	mm	45	1143	45	1143
Fan Speed	RPM		1200		1440	
Cooling Fan Air Flow @ 1" H2O Stat. Press and 125F @ Rad	CFM	m^3/min	25714	728.13	30000	849.5
Charge Air Cooler						
Compressor Outlet Temperature	F	C	0	0.0	0	0.0
Compressor Flow Rate	CFM	m^3/min	0	0.0	809	22.9
LUBRICATION SYSTEM						
Oil Specification	SAE 15W-40 Low Ash Gas engine oil (.25-.5% by wt), API CD/CF or higher					
Oil Pressure						
Idle						
Min	Psi	Bar	13	0.9	13	0.9
Max	Psi	Bar	43.5	3	43.5	3
Rated Speed						
Min	Psi	Bar	43.5	3	43.5	3
Max	Psi	Bar	94.5	6.5	94.5	6.5
Maximum Allowable Oil Temperature	F	C	230	110	230	110
Engine Oil Capacity						
Min	Qts	L	26.5	25	26.5	25
Max	Qts	L	32.75	31.0	32.75	31.0
Oil Filter Capacity	Qts	L	7.5	7.1	7.5	7.1
FUEL SYSTEM						
Low Pressure Dry Processed Natural Gas (Spec)						
Fuel Composition						
Maximum EPR Rated Pressure	psi	kPa	1	6.89	1	6.89
Maximum Running pressure to Electronic Pressure Regulator (EPR)	inH2O	kPa	11	2.74	11	2.74
Minimum Running pressure to EPR	inH2O	kPa	7	1.74	7	1.74
Minimum Gas Supply Pipe Size			2 x 1-1/4" NPT			
Low Pressure Vapor Propane (HD5)						
Fuel Composition						
Maximum EPR Rated Pressure	psi	kPa	1	6.89	1	6.89
Maximum Running Pressure to EPR	inH2O	kPa	11	2.74	11	2.74
Minimum Running Pressure to EPR	inH2O	kPa	7	1.74	7	1.74
Minimum LPG Supply Pipe Size			2 x 1-1/4" NPT			

The preceeding pipe sizes are only suggestions and piping sizes may vary with temperature, pressure, distance from supply and application of local codes. Gas must be available at adequate volume and pressure for engine at the EPR.

BALDOR GENERATORS

IGLC210-2N

Gaseous Fuel

Ratings Range – 60 Hertz Operation

Liquid Propane:	kW	96 - 132
	kVA	96 - 165
Natural Gas:	kW	96 - 200
	kVA	96 - 250

Baldor generators are available in a variety of power ratings and installation styles to meet the energy needs of the smallest businesses and the largest manufacturing facilities. All generator sets are designed to meet the specifications to ensure the fastest startup and dependable long-term operation. Rely on Baldor generators to provide the clean, quiet and environmentally friendly electrical power when you need it most. Emergency backup, standby, peak shaving or for any of your day or night electrical power needs, you can count on a dependable Baldor generator to provide the peace of mind and security you desire.

Standby Power Features

- ✓ Heavy-duty industrial gaseous fuel engine that meets the latest EPA emissions levels
- ✓ Brushless synchronous alternators with dynamic balancing and four pole construction
- ✓ Fully featured microprocessor based controller that's easy to use and field programmable for customized installations
- ✓ Generator sets are prototype tested and production tested to ensure easy startup
- ✓ Gen-set accepts rated load in one step
- ✓ Heavy duty construction that's designed for use in standby applications
- ✓ Manufactured in a dedicated and secure ISO-9001 certified facility
- ✓ Generator sets are backed by a world wide network of parts and service centers
- ✓ Optional agency approvals available including UL2200 and NFPA110
- ✓ Optional environmental enclosures available including weather resistant, sound attenuated, containerized, and walk-in models
- ✓ Full range of genset accessories and factory installed options available

Genset Ratings

Genset Model Number	Alternator	Voltage L-L / L-N	Phase	Hertz	150°C Rise Alternator Standby Rating – LP Fuel		150°C Rise Alternator Standby Rating – Natural Gas		125°C Rise Alternator Prime Rating – Natural Gas	
					kW / kVA	Amps	kW / kVA	Amps	kW / kVA	Amps
IGLC210-2N	UCI274E-311	208 / 120	3	60	129 / 161	448	136 / 170	472	128 / 160	445
		220 / 127	3	60	130 / 163	427	140 / 175	460	134 / 168	440
		240 / 120 (1)	3	60	129 / 161	388	136 / 170	409	128 / 160	385
		240 / 120 (1)	1	60	96 / 96	400	96 / 96	400	96 / 96	400
		240 / 139	3	60	130 / 163	391	150 / 188	452	143 / 179	431
		380 / 220	3	60	124 / 155	236	124 / 155	236	112 / 140	213
		416 / 240	3	60	129 / 161	224	136 / 170	236	128 / 160	222
		440 / 254	3	60	130 / 163	213	140 / 175	230	134 / 168	220
		480 / 277	3	60	130 / 163	196	150 / 188	226	143 / 179	215
	UCI274E-17	600 / 347	3	60	130 / 163	157	150 / 188	181	143 / 179	172
	UCI274H-311	208 / 120	3	60	132 / 165	459	199 / 249	691	176 / 220	611
		220 / 127	3	60	132 / 165	434	199 / 249	654	176 / 220	578
		240 / 120 (1)	3	60	132 / 165	397	199 / 249	599	176 / 220	530
		240 / 120 (1)	1	60	132 / 132	550	142 / 142	592	142 / 142	592
		240 / 139	3	60	132 / 165	397	200 / 250	602	177 / 221	533
		380 / 220	3	60	132 / 165	251	182 / 228	346	170 / 213	323
		416 / 240	3	60	132 / 165	229	199 / 249	346	176 / 220	306
		440 / 254	3	60	132 / 165	217	199 / 249	327	176 / 220	289
		480 / 277	3	60	132 / 165	199	200 / 250	301	177 / 221	266
	UCI274H-17	600 / 347	3	60	132 / 165	159	200 / 250	241	177 / 221	213
	UCI274H-06	240 / 120 (1)	1	60	130 / 130	542	180 / 180	750	156 / 156	650

NOTES: (1) Alternator connections have two circuits available for low voltage.
Available current in each low voltage circuit is equal to high voltage current listed in table.
For ratings and voltages not listed above refer to the Genset Selector.
Standby ratings do not have an overload capability but can be used for the duration of the utility failure per ISO-3046, DIN6271 and BS5514.
Baldor reserves the right to implement specifications or design changes without notice.

PDF Created with deskPDF PDF Writer - Trial :: http://www.docudesk.com

Engine Application Data

Engine Specifications

Manufacturer	NG Engine
Engine Model #	D111TIC
Engine Type	4 Cycle, 6 Cylinder
Induction System	Turbocharged/ Charge Air Cooled
Displacement, L (in^3)	11.05 (675)
EPA Emissions Certification	40 CFR Part 60 & 1048
HP at Rated Speed BHP (kW_m) NG	302 (225)
HP at Rated Speed BHP (kW_m) Propane	202 (151)
Rated RPM	1800
Bore and Stroke in (mm)	4.84x6.1 (123x155)
Compression Ratio	10.5:1
Air Filter Type	Dry
Governor Type / Model	Electronic
Governor Manufacturer	EControls
Freq Reg NL to FL	Isochronous
Freq Reg Steady State	+/-0.5%

Engine Lubrication System

Oil Pan Capacity gal (L)	6.6 (25.0)
Oil Capacity w/Filter gal (L)	7.6 (28.6)
Oil Filter Quantity	1
Oil Filter Type	Cartridge
Oil Cooler	Water Cooled
Recommended Oil	15W-40 Low Ash
Oil Press psi (kPa)	43.5 (299)

Engine Cooling System

Genset Max Ambient Temp °F (°C)	122 (50)
Engine Coolant Cap qt (L)	22 (25.0)
Engine + Radiator System Cap qt (L)	131.2 (149.0)
Water Pump Type	Centrifugal
Coolant Flow gpm (Lpm)	82 (310)
Charge Air Cooler Flow cfm (cmm)	555 (15.7)
Heat Rejected to Charge Air Cooler @ Rated kW; Btu/min (kW)	1460 (25.7)
Heat Rejected to Radiator @ Rated kW; Btu/min(kW)	11071 (194.7)
Max Restriction of Cooling Air in H_2O (kPa)	0.5 (0.124)

Engine Exhaust System

Exhaust Manifold Type	Wet
Exhaust Flow @ Rated kW cfm (cmm)	1425 (40.4)
Exhaust Temp (dry manifold) °F (°C)	1382 (750)
Min Back Pressure in H_2O (kPa)	0 (0)
Max Back Pressure in H_2O (kPa)	20.4 (5.1)
Exhaust Outlet Diameter in (mm)	3.5 (88.9)
Exhaust Outlet Type	Flange
Exhaust Catalyst	Included

Engine Electrical System

Charging Alternator Volts dc	24
Charging Alternator Amps	45
Grounding Polarity	Negative
Starter Motor Volts dc	24
Battery Recommendations	
Battery Volts dc	24
Min Cold Cranking Amps	900
Quantity Required	2

Ventilation Requirements

Cooling Airflow, scfm (cmm)	22300 (632)
Combustion Airflow, cfm (cmm)	400 (11.3)
Heat Rejected to Ambient	
From Engine, Btu/min (kW)	1877 (33)
From Alternator, Btu/min (kW)	836 (14.7)
Recommended Free Area Intake Louver Size, ft^2 (m^2)	46.0 (4.28)

Engine Fuel System

Recommended Fuel	
Natural Gas min HHV (Btu/ft^3)	1015
Propane Vapor min HHV (Btu/ft^3)	2650
Fuel Supply Pressure in-H_2O (kPa)	7-11 (1.7-2.7)
Fuel Line At Engine	
Supply Line, npt	2

Propane Fuel Consumption – Standby Rating

100% Load cfph (m^3ph)	704 (19.9)
75% Load cfph (m^3ph)	600 (17.0)
50% Load cfph (m^3ph)	404 (11.4)
25% Load cfph (m^3ph)	255 (7.2)

NG Fuel Consumption – Standby Rating

100% Load cfph (m^3ph)	2115 (59.9)
75% Load cfph (m^3ph)	1648 (46.7)
50% Load cfph (m^3ph)	1157 (32.8)
25% Load cfph (m^3ph)	705 (20.0)

NG Fuel Consumption – Standby Rating

100% Load cfph (m^3ph)	1925 (54.5)
75% Load cfph (m^3ph)	1500 (42.5)
50% Load cfph (m^3ph)	1053 (29.8)
25% Load cfph (m^3ph)	642 (18.2)

Engine Output Deratings - Standby

Rated Temp	77°F
Rated Altitude	325 ft
Max Altitude	10,000 ft
Temperature Derate	-1% / 8° F
Altitude Derate	-3% / 1000 ft

PDF Created with deskPDF PDF Writer - Trial :: http://www.docudesk.com

Alternator Specifications

Alternator Type	4-Pole, Rotating Field
Exciter Type	Brushless
Excitation System	
Shunt Connection	Standard
PMG	Optional
Insulation	per NEMA MG1
Material	Class H
Standby Temp Rise	150°C
Lead Connection	12 Lead, Reconnectable
Stator Pitch	2/3
Amortisseur Winding	Full
Bearing	Single, Double Shielded
Drive Coupling	Flexible Disk
Unbalanced Load	20% of Standby Rating

Automatic Voltage Regulator	
Wound Field	SX460
PMG	MX341, MX321
Voltage Regulation	No Load to Full Load
Std Regulator	+/- 1.5%
PMG Regulator	+/- 1%, +/- 0.5%
Load Acceptance	100% of Rating, One Step
Subtransient Reactance	
480V, Per Unit	14%, 11%
TIF (1960 Weighting)	<50
Line Harmonics	5% Maximum
Motor Starting kVA	30% Max Voltage Dip
Alt @ 480V SkVA	UCI274E-311 450 kVA
Alt @ 480V SkVA	UCI274H-311 730 kVA

Genset Controller Specifications

Baldor InteliLite NT Features

Large back-lit graphical LCD Display
- 64x128 pixel resolution

6 LED Genset Status Indicators

Alarm	Red LED
Not In Auto	Red LED
Warning	Yellow LED
Running	Green LED
Ready / Auto	Green LED
Supplying Load	Green LED

Sealed Membrane Panel to IP65

Push Buttons for Simple Control
- Start, Stop, Fault Reset, Horn Reset, Mode, Page, and Enter Keys

Display Metering and Protection
- Oil Pressure Warning / Shutdown
- High / Low Coolant Temperature Warning
- High Coolant Temperature Shutdown
- Low Coolant Level Shutdown
- Over Speed Protection
- Battery Voltage Over / Under Warning
- Running Hour Meter
- Generator Under / Over Volts Warn / Shutdown
- Generator Under / Over Freq Warn / Shutdown
- Generator Over Current Shutdown
- Generator Output Metering for V1-V3, I1-I3, Hz, kW, kWh, kVAr, kVAh

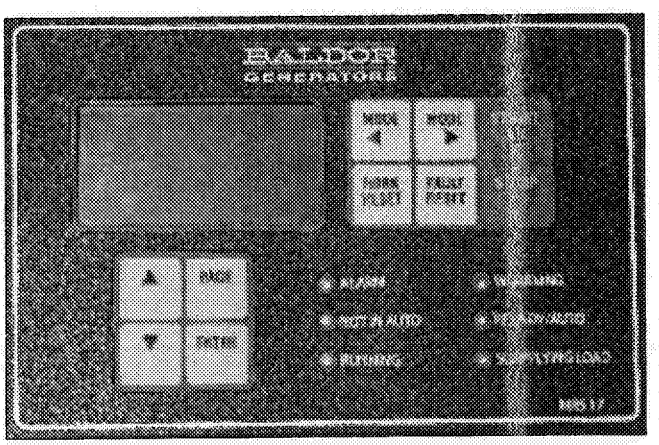

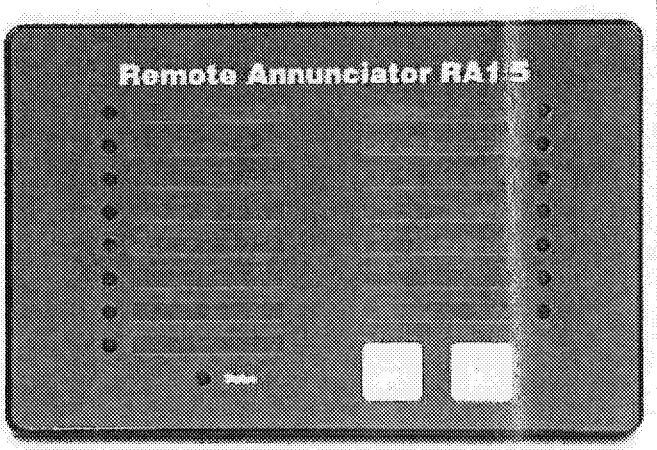

BALDOR GENERATORS

PDF Created with deskPDF PDF Writer - Trial :: http://www.docudesk.com

Additional Standard Genset Features

- ✓ Formed Steel Sub-Base
- ✓ Integral Vibration Isolation
- ✓ Sub-Base Lifting Eyes
- ✓ Unit Mounted Radiator
- ✓ Engine Mounted Fan
- ✓ Radiator Fan Guard
- ✓ Battery Charging Alternator
- ✓ Battery Rack and Cables
- ✓ Unit Mounted Control Panel
- ✓ Spin-On Oil Filter
- ✓ Enamel Finish
- ✓ One Set - Operation / Maintenance Manual
- ✓ Factory Tested Prior to Shipment
- ✓ Limited Warranty

Optional Agency Approvals

- ❒ UL2200 (Review Option Availability)
- ❒ NFPA110 (Request Remote Annunciator)

Weight and Dimensions (Open Unit)

Weight – Wet lb (kg)	5420 (2458)
Overall Dimensions	Length x Width x Height
inches	131 x 60 x 75
mm	3327 x 1524 x 1905

Note: Drawing is provided for reference only.
Use engineering outline for installation planning.

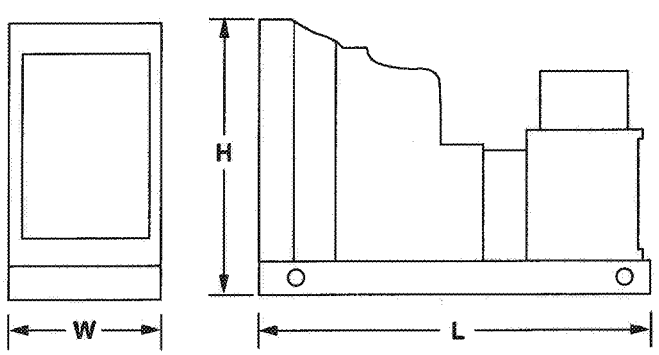

Available Accessories and Options

Open Unit

- ❒ Industrial Silencer
- ❒ Residential Silencer
- ❒ Critical Silencer
- ❒ Hospital Grade Silencer
- ❒ Exhaust Flex Pipe
- ❒ Rain Cap
- ❒ Radiator Duct Flange

Enclosed Units

- ❒ Weather Resistant Enclosure
- ❒ Sound Attenuated w/Internal Critical Silencer
- ❒ ISO Container
- ❒ Walk-In Enclosure

Alternator Accessories

- ❒ PMG Exciter and AVR Upgrade
- ❒ Alternator Space Heater
- ❒ Exciter Field Circuit Breaker
- ❒ Alternator Drip Shield

Genset Accessories

- ❒ Voltage Adjust Potentiometer
- ❒ Starting Battery

Battery Charger ❒ Auto/Float

Auto/ Float Equalize Timer ❒ Manual ❒ Automatic

- ❒ Battery Heater
- ❒ Engine Coolant Heater
- ❒ Oil & Coolant Drain Valves (Engine/Radiator)
- ❒ Oil & Coolant Drain Extended to Base

Main Output Breaker

- ❒ Wall Mount
- ❒ Unit Mount

Transfer Switch

- ❒ Manual
- ❒ Automatic

Control Panel

- ❒ Remote Annunciator
- ❒ Remote Communications
- ❒ Remote E-Stop

Fuel System

- ❒ Fuel Strainer
- ❒ Dual Fuel Automatic Changeover

Vibration Isolators

- ❒ Elastomer Isolator
- ❒ Standard Spring
- ❒ Seismic Spring

BALDOR GENERATORS
WORLD HEADQUARTERS
Baldor Electric Company • P. O. Box 2400 • Fort Smith, AR 72902-2400 U.S.A.
Phone (479) 646-4711 • Fax (479) 648-5792 • International Fax (479) 648-5895
www.baldor.com

© Baldor Electric Company
FM24034
PDF Created with deskPDF PDF Writer - Trial :: http://www.docudesk.com

Printed in U.S.A.
3/10 Online

ATTACHMENT F

FEDERAL RULE APPLICABILITY

Ute Tribal 4-23-3-1W-H1
POTENTIALLY APPLICABLE FEDERAL REGULATIONS

A breakdown of federal regulations will be discussed, including whether or not a rule is applicable and why or why not. Henceforth, the Ute Tribal 4-23-3-1W-H1 site will be referred to as either the "Site" or the "Facility" throughout this document.

40 CODE OF FEDERAL REGULATIONS (CFR) 60 – STANDARDS OF PERFORMANCE FOR NEW STATIONARY SOURCES

Subpart JJJJ - Stationary Spark Ignition Internal Combustion Engines

Section 60.4230(a) states "The provisions of this subpart are applicable to manufacturers, owners, and operators of stationary spark ignition (SI) internal combustion engines (ICE) as specified in paragraphs (a)(1) through (5) of this section. For the purposes of this subpart, the date that construction commences is the date the engine is ordered by the owner or operator." As an operator, Section 60.4230(a)(3) reads "Owners and operators of stationary SI ICE that commence construction after June 12, 2006, where the stationary SI ICE are manufactured:

(i) On or after July 1, 2007, for engines with a maximum engine power greater than or equal to 500 HP (except lean burn engines with a maximum engine power greater than or equal to 500 HP and less than 1,350 HP);
(ii) on or after January 1, 2008, for lean burn engines with a maximum engine power greater than or equal to 500 HP and less than 1,350 HP;
(iii) on or after July 1, 2008, for engines with a maximum engine power less than 500 HP; or
(iv) on or after January 1, 2009, for emergency engines with a maximum engine power greater than 19 KW (25 HP)."

One of two pumpjack engines will be installed at this facility, either an Doosan D11.1L or an Doosan D14.6L. Both engines are stationary spark ignition internal combustion engines (ICE), have a maximum horsepower of less than 500 HP, and were manufactured after 1/1/2011. Therefore, Subpart JJJJ will apply to these engines.

40 CFR 63 – NATIONAL EMISSION STANDARDS FOR HAZARDOUS AIR POLLUTANTS FOR SOURCE CATEGORIES

Subpart ZZZZ – Reciprocating Internal Combustion Engines (RICE)

Section 63.6580 states the purpose of Subpart ZZZZ as "establishes national emission limitations and operating limitations for hazardous air pollutants (HAP) emitted from stationary reciprocating internal combustion engines (RICE) located at major and area sources of HAP emissions. This subpart also establishes requirements to demonstrate initial and continuous compliance with the emission limitations and operating limitations." Section 63.6585 explains "You are subject to this subpart if you own or operate a stationary RICE at a major or area source of HAP emissions, except if the stationary RICE is being tested at a stationary RICE test cell/stand." Section 63.6590(a)(1)(iii) reads, "For stationary RICE located at an area source of HAP emissions, a stationary RICE is existing if you commenced construction or reconstruction of the stationary RICE before June 12, 2006." Section 63.6590(a)(2)(iii) reads, "A stationary RICE located at an area source of HAP emissions is new if you commenced construction of the stationary RICE on or after June 12, 2006". Section 63.6590(c) reads "An affected source that meets any of the criteria in paragraphs (c)(1) through (7) of this section must meet the requirements of this part by meeting the requirements of 40 CFR part 60 subpart IIII, for compression ignition engines or 40 CFR part 60 Subpart JJJJ, for spark ignition engines. No further requirements apply for such engines under this part." Section 63.6590(c)(1) reads "A new or reconstructed stationary RICE located at an

The Site is an area source emitting less than 10 tons per year of any single HAP and less than 25 tons per year of any combination of HAPs. Construction of the engine at the Facility occurred after June 12, 2006. Therefore, the engines are new stationary RICE located at an area source. The engines will meet the requirements of Subpart ZZZZ by meeting the requirements of 40 CFR Subpart JJJJ for spark ignition engines.

Ute Tribal 4-23-3-1W-H1
POTENTIALLY APPLICABLE FEDERAL REGULATIONS (continued)

40 CODE OF FEDERAL REGULATIONS (CFR) 60 – STANDARDS OF PERFORMANCE FOR NEW STATIONARY SOURCES

Subpart Kb applies to each storage vessel with a capacity greater than or equal to 75 cubic meters (472 bbls) that is used to store volatile organic liquids. However, the subpart does not apply to storage vessels with a design capacity less than or equal to 1,589.874 cubic meters (10,000 bbls) used for petroleum or condensate stored, processed, or treated prior to custody transfer. Each storage tank on site will be less than 1,589.874 cubic meters and will be used for petroleum or condensate stored, processed, or treated prior to custody transfer. Therefore, NSPS Subpart Kb will not apply to this facility.

Subpart KKK applies to onshore natural gas processing plants. Natural gas processing plant is defined as any processing site engaged in the extraction of natural gas liquids from field gas, fractionation of mixed natural gas liquids to natural gas products, or both. This facility will not extract natural gas liquids from field gas; therefore, NSPS Subpart KKK will not apply to this facility.

Subpart LLL applies to sweetening units and sweetening units followed by sulfur recovery units that process natural gas. This facility will not have a sweetening unit; therefore, NSPS Subpart LLL will not apply to this facility.

40 CFR 63 – NATIONAL EMISSION STANDARDS FOR HAZARDOUS AIR POLLUTANTS FOR SOURCE CATEGORIES

Subpart HH applies to owners and operators of triethylene glycol (TEG) dehydration units. This facility will not have a TEG dehydration unit; therefore, MACT Subpart HH will not apply to this facility.

Subpart HHH applies to owners and operators of natural gas transmission and storage facilities that are major sources of HAP emissions. This facility will not be a major source of HAP emissions; therefore, MACT Subpart HHH will not apply to this facility.

Ute Tribal 4-23-3-1W-H1
POTENTIALLY APPLICABLE FEDERAL REGULATIONS (continued)

40 CODE OF FEDERAL REGULATIONS (CFR) 60 – STANDARDS OF PERFORMANCE FOR NEW STATIONARY SOURCES

Subpart OOOOa - Standards of Performance for Crude Oil and Natural Gas Facilities for which Construction, Modification, or Reconstruction Commenced after September 18, 2015

Section 60.5365a states "You are subject to the applicable provisions of this subpart if you are the owner or operator of one or more of the onshore affected facilities listed in paragraphs (a) through (j) of this section for which you commence construction, modification, or reconstruction after September 18, 2015."

If the well site addressed in this Notice of Intent (NOI) are constructed, modified, or reconstructed after September 18, 2015, then certain sections of Subpart OOOOa may apply. The potential applicable sections are listed below.

"(a) Each well affected facility, which is a single well that conducts a well completion operation following hydraulic fracturing or refracturing…" Oil wells that have undergone well completions operations before the applicability deadline are not subject to this particular section. If the well(s) undergoes a well completions operation following hydraulic fracturing or refracturing after the applicability deadline then this particular section will apply at that time.

"(b) Each centrifugal compressor affected facility, which is a single centrifugal compressor using wet seals...." There are no centrifugal compressors located at the well site. Therefore, this particular section does not apply.

"(c) Each reciprocating compressor affected facility, which is a single reciprocating compressor...." There are no reciprocating compressors located at the well site. Therefore, this particular section does not apply.

"(d)(1) Each pneumatic controller affected facility not located at a natural gas processing plant, which is a single continuous bleed natural gas-driven pneumatic controller operating at a natural gas bleed rate greater than 6 scfh..." There are no continuous bleed natural gas-driven pneumatic controllers operating at a natural gas bleed rate greater than 6 scfh located at the well site. Therefore, this particular section does not apply.

"(e) Each storage vessel affected facility, which is a single storage vessel with the potential for VOC emissions equal to or greater than 6 tpy as determined according to this section..." If the well(s) feeding the storage vessels located at the well site are completed, recompleted, or undergo a modification after the applicability deadline, then this section may apply. The potential for VOC emissions will be calculated using a generally accepted model or calculation methodology, based on the maximum average daily throughput determined for a 30-day period of production prior to the applicable emission determination deadline specified in this subsection. The determination may take into account requirements under a legally and practically enforceable limit in an operating permit or other requirement established under a federal, state, local or tribal authority.

Ute Tribal 4-23-3-1W-H1
POTENTIALLY APPLICABLE FEDERAL REGULATIONS (continued)

40 CODE OF FEDERAL REGULATIONS (CFR) 60 – STANDARDS OF PERFORMANCE FOR NEW STATIONARY SOURCES

Subpart OOOOa - Standards of Performance for Crude Oil and Natural Gas Facilities for which Construction, Modification, or Reconstruction Commenced after September 18, 2015

"(f) The group of all equipment within a process unit is an affected facility..." There are no process units located at the well site. Therefore, this particular section does not apply.

"(g) Sweetening units located at onshore natural gas processing plants that process natural gas produced from either onshore or offshore wells..." The well site is not a natural gas processing plant. Therefore, this particular section of this rule does not apply.

"(h)(2) For well sites, each pneumatic pump affected facility, which is a single natural gas-driven diaphragm pump..." There are no pneumatic pumps located at the well site. Therefore, this particular section does not apply.

"(i) Except as provided in §60.5365a(i)(2), the collection of fugitive emissions components at a well site, as defined in §60.5430a, is an affected facility..." If the well site is constructed, modified, or reconstructed after the applicability deadline, then this section will apply.

"(j) The collection of fugitive emissions components at a compressor station, as defined in §60.5430a, is an affected facility..." This well site is not a compressor station. Therefore, this particular section does not apply.

Ute Tribal 4-23-3-1W-H1
POTENTIALLY APPLICABLE FEDERAL REGULATIONS (continued)

40 CODE OF FEDERAL REGULATIONS (CFR) 60 – STANDARDS OF PERFORMANCE FOR NEW STATIONARY SOURCES

Subpart OOOO—Standards of Performance for Crude Oil and Natural Gas Production, Transmission and Distribution for which Construction, Modification or Reconstruction Commenced after August 23, 2011, and on or before September 18, 2015

Section 60.5365 states "You are subject to the applicable provisions of this subpart if you are the owner or operator of one or more of the onshore affected facilities listed in paragraphs (a) through (g) of this section for which you commence construction, modification or reconstruction after August 23, 2011..."

If this well site addressed in this NOI was constructed, modified, or reconstructed after August 23, 2011 and before September 18, 2015, then certain sections of Subpart OOOO may apply. The potential applicable sections are listed below.

"(a) Each gas well affected facility, which is a single natural gas well... " The well(s) is an oil well. Therefore, this particular section of this rule will not apply.

"(b) Each centrifugal compressor affected facility..." There are no centrifugal compressors found at the well site. Therefore, this particular section of this rule will not apply.

"(c) Each reciprocating compressor affected facility..." There are no reciprocating compressors found at the well site. Therefore, this particular section of this rule will not apply.

"(d)(1) For the oil production segment (between the wellhead and the point of custody transfer to an oil pipeline), each pneumatic controller affected facility..." There are no continuous bleed natural gas-driven pneumatic controllers operating at a natural gas bleed rate greater than 6 scfh found at the well site. Therefore, this particular section of this rule will not apply.

"(e) Each storage vessel affected facility, which is a single storage vessel located in the oil and natural gas production segment, natural gas processing segment or natural gas transmission and storage segment, and has the potential for VOC emissions equal to or greater than 6 tpy as determined according to this section by October 15, 2013 for Group 1 storage vessels and by April 15, 2014, or 30 days after startup (whichever is later) for Group 2 storage vessels..." If the well(s) feeding the storage vessels located at the well site are completed, recompleted, or undergo a modification within the applicability dates, then this section may apply. The potential for VOC emissions will be calculated using a generally accepted model or calculation methodology, based on the maximum average daily throughput determined for a 30-day period of production prior to the applicable emission determination deadline specified in this subsection. The determination may take into account requirements under a legally and practically enforceable limit in an operating permit or other requirement established under a federal, state, local or tribal authority.

Ute Tribal 4-23-3-1W-H1
POTENTIALLY APPLICABLE FEDERAL REGULATIONS (continued)

40 CODE OF FEDERAL REGULATIONS (CFR) 60 – STANDARDS OF PERFORMANCE FOR NEW STATIONARY SOURCES

Subpart OOOO—Standards of Performance for Crude Oil and Natural Gas Production, Transmission and Distribution for which Construction, Modification or Reconstruction Commenced after August 23, 2011, and on or before September 18, 2015

"(f) The group of all equipment, except compressors, within a process unit is an affected facility..." There are no process units at this well site. Therefore, this particular section of this rule will not apply.

"(g) Sweetening units located at onshore natural gas processing plants..." This well site is not a natural gas processing plant. Therefore, this particular section of this rule will not apply.