EPA Form No. 5900-391
EPA ICR No. 1230.27
OMB Control No. 2060-0003
Approval expires 4/30/2017

United States Environmental Protection Agency
https://www.epa.gov/tribal-air/tribal-minor-new-source-review
January 4, 2017

# Part 2: Submit Within 60 Days After Startup of Production -- Emission and Production Information

# FEDERAL IMPLEMENTATION PLAN FOR TRUE MINOR SOURCES IN INDIAN COUNTRY IN THE OIL AND NATURAL GAS PRODUCTION AND NATURAL GAS PROCESSING SEGMENTS OF THE OIL AND NATURAL GAS SECTOR

## Registration for New True Minor Oil and Natural Gas Sources and Minor Modifications at Existing True Minor Oil and Natural Gas Sources

**Please submit information to:**

| | |
|---|---|
| **[Reviewing Authority Address Phone]** | Air and Toxics Technical Enforcement Program<br>Office of Enforcement, Compliance and Environmental Justice<br>Mail Code 8ENF-AT<br>1595 Wynkoop Street<br>Denver, CO 80202-1129 |

**A. GENERAL SOURCE INFORMATION (See Instructions Below)**

| | | | |
|---|---|---|---|
| **1. Company Name**<br>Crescent Point Energy U.S. Corp | | **2. Source Name**<br>Horseshoe Bend Fed 15-29-6-21E | |
| **3. Type of Oil and Natural Gas Operation**<br>Oil Wellsite | | **4. New Minor Source?** [X] Yes [ ] No<br>**5. True Source Modification?** [ ] Yes [X] No | |
| **6. NAICS Code**<br>211111 | | **7. SIC Code**<br>1311 | |
| **8. U.S. Well ID(s) or API Number(s) [if applicable]**<br>4304753939 | | | |
| **9. Area of Indian Country**<br>Uintah and Ouray | **10. County**<br>UINTAH | **11a. Latitude**<br>40.26416595 | **11b. Longitude**<br>-109.5766711 |



ED_004016P_00011228-00001

**B. CONTACT INFORMATION (See Instructions Below)**

| | |
|---|---|
| **1. Owner Name**<br>Crescent Point Energy U.S. Corp | Title<br>N/A |
| Mailing Address<br>555 17th St, Suite 1800, Denver, CO 80202 | |
| Email Address<br>jmcqueen@crescentpointenergy.com | |
| Telephone Number<br>(720) 880-3610 | Facsimile Number<br>(303) 292-1562 |
| **2. Operator Name** (if different from owner)<br>Crescent Point Energy U.S. Corp | Title |
| Mailing Address<br>555 17th St, Suite 1800, Denver, CO 80202 | |
| Email Address<br>jmcqueen@crescentpointenergy.com | |
| Telephone Number<br>(720) 880-3610 | Facsimile Number<br>(303) 292-1562 |
| **3. Source Contact**<br>Jennifer McQueen | Title<br>Air Quality Specialist |
| Mailing Address<br>555 17th St, Suite 1800, Denver, CO 80202 | |
| Email Address<br>jmcqueen@crescentpointenergy.com | |
| Telephone Number<br>(303) 308-6285 | Facsimile Number<br>(303) 292-1562 |

| **4. Compliance Contact** | Title |
|---|---|
| Jennifer McQueen | Air Quality Specialist |
| Mailing Address | |
| 555 17th St, Suite 1800, Denver, CO 80202 | |
| Email Address | |
| jmcqueen@crescentpointenergy.com | |
| Telephone Number | Facsimile Number |
| (303) 308-6285 | (303) 292-1562 |

## C. EMISSIONS AND OTHER SOURCE INFORMATION

Include all of the following information in the table below and as attachments to this form:

*Note: The emission estimates can be based upon actual test data or, in the absence of such data, upon procedures acceptable to the Reviewing Authority. The following procedures are generally acceptable for estimating emissions from air pollution sources: (1) unit-specific emission tests; (2) mass balance calculations; (3) published, verifiable emission factors that are applicable to the unit (i.e., manufacturer specifications); (4) other engineering calculations; or (5) other procedures to estimate emissions specifically approved by the Reviewing Authority. Guidance for estimating emissions can be found at https://www.epa.gov/chief.*

[X] Narrative description of the operations.

[X] Identification and description of any air pollution control equipment and compliance monitoring devices or activities.

[X] Type and actual amount (annually) of each fuel that will be used.

[X] Type of raw materials used (e.g., water for hydraulic fracturing).

[X] Actual, annual production rates.

[X] Actual operating schedules.

[X] Any existing limitations on source operations affecting emissions or any work practice standards, where applicable, for all regulated New Source Review (NSR) pollutants at your source. Indicate all requirements referenced in the Federal Implementation Plan (FIP) for True Minor Sources in Indian Country in the Oil and Natural Gas Production and Natural Gas Processing Segments of the Oil and Natural Gas Sector that apply to emissions units and air pollution generating activities at the source or proposed. Include statements indicating each emissions unit that is an emissions unit potentially subject to the requirements referenced in the FIP, but does not meet the definition of an affected facility under the referenced requirement, and therefore, is not subject to those requirements.

[X] For each emissions unit comprising the new source or modification, estimates of the total allowable (potential to emit) annual emissions at startup of production from the air pollution source for the following air pollutants: particulate matter, $PM_{10}$, $PM_{2.5}$, sulfur oxides ( ), nitrogen oxides ($NO_x$), carbon monoxide (CO), volatile organic compound (VOC), lead (Pb) and lead compounds, fluorides (gaseous and particulate), sulfuric acid mist ($H_2SO_4$), hydrogen sulfide ($H_2S$), total reduced sulfur (TRS) and reduced sulfur compounds, including all calculations for the estimates. Allowable annual emissions are defined as: emissions rate of an emissions unit calculated using the maximum capacity of a stationary source to emit a pollutant under its physical and operational design. Any physical

or operational limitation on the capacity of the source to emit a pollutant, including air pollution control equipment and restrictions on hours of operation or on the type or amount of material combusted, stored, or processed, shall be treated as part of its design if the limitation, or the effect it would have on emissions, is legally and practically enforceable. You must determine the potential for emissions within 30 days from the startup of production.

[X] For each emissions unit comprising the new source or modification, estimates of the total actual annual emissions during the upcoming, consecutive 12 months from the air pollution source for the following air pollutants: particulate matter (PM, $PM_{10}$, $PM_{2.5}$), sulfur oxides ($SO_x$), nitrogen oxides (NOx), carbon monoxide (CO), volatile organic compound (VOC), lead (Pb) and lead compounds, ammonia ($NH_3$), fluorides (gaseous and particulate), sulfuric acid mist ($H_2SO_4$), hydrogen sulfide ($H_2S$), total reduced sulfur (TRS) and reduced sulfur compounds, including all calculations for the estimates. Estimates of actual emissions must take into account equipment, operating conditions, and air pollution control measures. You should calculate an estimate of the actual annual emissions using estimated operating hours, production rates, in-place control equipment, and types of materials processed, stored, or combusted.

## D. TABLE OF ESTIMATED EMISSIONS

Provide in the table below estimates of the total allowable annual emissions in tons per year (tpy) and total actual annual emissions (tpy) for the following pollutants for all emissions units comprising the new source or modification.

| POLLUTANT | TOTAL ALLOWABLE ANNUAL EMISSIONS (TPY) | TOTAL ACTUAL ANNUAL EMISSIONS (TPY) |
|---|---|---|
| PM | 0.29 | 0.29 |
| $PM_{10}$ | 0.29 | 0.29 |
| $PM_{2.5}$ | 0.29 | 0.29 |
| $SO_x$ | 0.00 | 0.00 |
| $NO_x$ | 6.54 | 6.54 |
| CO | 11.25 | 11.25 |
| VOC | 14.71 | 14.71 |
| Pb | None | None |

| POLLUTANT | TOTAL ALLOWABLE ANNUAL EMISSIONS (TPY) | TOTAL ACTUAL ANNUAL EMISSIONS (TPY) |
|---|---|---|
| NH3 | None | None |
| Fluorides | None | None |
| $H_2SO_4$ | None | None |
| $H_2S$ | None | None |
| TRS | None | None |

# ATTACHMENT A

# OIL AND GAS COMPOSITION ANALYSES

# TECHNOLOGY LABORATORY, INC.

**CENTRE PROFESSIONAL OFFICE PARK**
1012 Centre Avenue
Fort Collins, Colorado 80526
(970) 490-1414

## CERTIFICATE OF ANALYSIS

**Antea**
**1343 S. Garfield Ave**
**Loveland, CO 80537**

**Date Sampled:** 1/7/2014 & 1/8/2014
**Date Received:** 1/10/2014
**Date Analyzed:** 2/7/2014

**Laboratory ID:** A9660
**Field Location:** Crescent Point Roosevelt, UT (NGL)

**Matrix:** Oil

| Laboratory ID: | Sample Name: | RVP psi @100°F | Vapor Pressure psi @145°F | API Gravity @60°F | Density 60/60 | Avg MW estimated |
|---|---|---|---|---|---|---|
| A9660-47 | Womack Daddy 3-16-3-IE A | 0.18 | 3.2 | 25.6 | 0.901 | 600 |
| A9660-49 | Womack 3-83-IE A | 0.20 | 1.0 | 32.8 | 0.861 | 600 |
| A9660-51 | Ute Energy 7-27-8-IE A | 0.18 | 1.2 | 34.1 | 0.854 | 600 |
| A9660-54 | ULT 15-34-3-IE A | 0.24 | 2.0 | 31.1 | 0.87 | 600 |
| A9660-56 | Coleman Tribal 13-8-4-2E A | 0.42 | 0.9 | 31.7 | 0.861 | 600 |
| A9660-61 | Deep Creek Solo 5-16-4-2E | 0.39 | 2.2 | 30.9 | 0.855 | 600 |
| A9660-58 | ULT 12-6-4-2E A | 0.18 | 1.6 | 33.0 | 0.86 | 600 |
| A9660-62 | Ute Tribal 15-32-3-2E A | 0.26 | 1.9 | 32.9 | 0.861 | 600 |
| A9660-64 | Deep Creek 2-30-3-2E A | 0.25 | 2.1 | 33.6 | 0.857 | 600 |
| A9660-66 | Coleman Tribal 7-8-4-2E A | 0.20 | 1.2 | 33.7 | 0.857 | 600 |
| A9660-68 | ULT 16-36-3-1E A | 0.23 | 0.5 | 33.9 | 0.856 | 600 |
| A9660-70 | ULT 16-26-3-1E A | 0.10 | 1.7 | 32.6 | 0.862 | 600 |
| A9660-72 | Ouray Valley Federal 3-41 A | 0.24 | 0.9 | 30.3 | 0.875 | 600 |
| A9660-74 | Federal 14-19-6-21 | 0.19 | 2.1 | 28.1 | 0.887 | 600 |
| A9660-76 | Gose 3-18-6-21 A | 0.21 | 1.1 | 29.4 | 0.879 | 600 |

**FESCO, Ltd.**
**1100 Fesco Ave. - Alice, Texas 78332**

**For:** Ute Energy Upstream Holdings
P. O. Box 789
Fort Duchesne, Utah 84026

**Sample:** Ute Tribal 1-5-4-2E
Gas Evolved From Hydrocarbon Liquid Flashed
From 30 psig & 160 °F to 0 psig & 70 °F

Date Sampled: 11/02/2011 Job Number: 16137.001

## CHROMATOGRAPH EXTENDED ANALYSIS - SUMMATION REPORT

| COMPONENT | MOL% | GPM |
|---|---|---|
| Hydrogen Sulfide* | < 0.001 | |
| Nitrogen | 3.241 | |
| Carbon Dioxide | 0.400 | |
| Methane | 14.294 | |
| Ethane | 17.218 | 4.579 |
| Propane | 29.085 | 7.967 |
| Isobutane | 6.454 | 2.100 |
| n-Butane | 13.604 | 4.264 |
| 2-2 Dimethylpropane | 0.070 | 0.027 |
| Isopentane | 4.672 | 1.699 |
| n-Pentane | 4.671 | 1.684 |
| Hexanes | 3.848 | 1.579 |
| Heptanes Plus | 2.443 | 0.978 |
| Totals | 100.000 | 24.876 |

**Computed Real Characteristics Of Heptanes Plus:**

| | | |
|---|---|---|
| Specific Gravity | 3.339 | (Air=1) |
| Molecular Weight | 94.85 | |
| Gross Heating Value | 4945 | BTU/CF |

**Computed Real Characteristics Of Total Sample:**

| | | |
|---|---|---|
| Specific Gravity | 1.599 | (Air=1) |
| Compressibility (Z) | 0.9807 | |
| Molecular Weight | 45.41 | |
| Gross Heating Value | | |
| Dry Basis | 2557 | BTU/CF |
| Saturated Basis | 2513 | BTU/CF |

*Hydrogen Sulfide tested in laboratory by Stained Tube Method (GPA 2377)
Results: 0.252 Gr/100 CF, 4.0 PPMV or 0.0004 Mol %

Base Conditions: 14.650 PSI & 60 Deg F

Certified: FESCO, Ltd. - Alice, Texas

Analyst: TJ
Processor: FC
Cylinder ID: FL-12s

David Dannhaus 361-661-7015

## CHROMATOGRAPH EXTENDED ANALYSIS
## TOTAL REPORT

| COMPONENT | MOL % | GPM | WT % |
|---|---|---|---|
| Hydrogen Sulfide* | < 0.001 | | < 0.001 |
| Nitrogen | 3.241 | | 1.999 |
| Carbon Dioxide | 0.400 | | 0.388 |
| Methane | 14.294 | | 5.049 |
| Ethane | 17.218 | 4.579 | 11.402 |
| Propane | 29.085 | 7.967 | 28.244 |
| Isobutane | 6.454 | 2.100 | 8.261 |
| n-Butane | 13.604 | 4.264 | 17.413 |
| 2,2 Dimethylpropane | 0.070 | 0.027 | 0.111 |
| Isopentane | 4.672 | 1.699 | 7.423 |
| n-Pentane | 4.671 | 1.684 | 7.422 |
| 2,2 Dimethylbutane | 0.021 | 0.009 | 0.040 |
| Cyclopentane | 0.339 | 0.141 | 0.524 |
| 2,3 Dimethylbutane | 0.070 | 0.029 | 0.133 |
| 2 Methylpentane | 1.270 | 0.524 | 2.410 |
| 3 Methylpentane | 0.589 | 0.239 | 1.118 |
| n-Hexane | 1.559 | 0.637 | 2.959 |
| Methylcyclopentane | 0.537 | 0.184 | 0.995 |
| Benzene | 0.078 | 0.022 | 0.134 |
| Cyclohexane | 0.341 | 0.115 | 0.632 |
| 2-Methylhexane | 0.116 | 0.054 | 0.256 |
| 3-Methylhexane | 0.139 | 0.063 | 0.307 |
| 2,2,4 Trimethylpentane | 0.000 | 0.000 | 0.000 |
| Other C7's | 0.390 | 0.169 | 0.852 |
| n-Heptane | 0.284 | 0.130 | 0.627 |
| Methylcyclohexane | 0.196 | 0.078 | 0.424 |
| Toluene | 0.059 | 0.020 | 0.120 |
| Other C8's | 0.207 | 0.096 | 0.502 |
| n-Octane | 0.029 | 0.015 | 0.073 |
| Ethylbenzene | 0.003 | 0.001 | 0.007 |
| M & P Xylenes | 0.011 | 0.004 | 0.026 |
| O-Xylene | 0.002 | 0.001 | 0.005 |
| Other C9's | 0.042 | 0.021 | 0.117 |
| n-Nonane | 0.003 | 0.002 | 0.008 |
| Other C10's | 0.005 | 0.003 | 0.016 |
| n-Decane | 0.001 | 0.001 | 0.003 |
| Undecanes (11) | 0.000 | 0.000 | 0.000 |
| Totals | 100.000 | 24.876 | 100.000 |

**Computed Real Characteristics Of Total Sample:**

Specific Gravity ---------- 1.599 (Air=1)
Compressibility (Z) ---------- 0.9807
Molecular Weight ---------- 45.41

Gross Heating Value
Dry Basis ---------- 2557 BTU/CF
Saturated Basis ---------- 2513 BTU/CF

**FESCO, Ltd.**
**1100 Fesco Ave. - Alice, Texas 78332**

**For:** Ute Energy Upstream Holdings
P. O. Box 789
Fort Duchesne, Utah 84026

**Sample:** Ute Tribal 1-5-4-2E
Gas Evolved From Hydrocarbon Liquid Flashed
From 46 psig & 155 °F to 0 psig & 70 °F

Date Sampled: 11/02/2011 Job Number: 16136.001

## CHROMATOGRAPH EXTENDED ANALYSIS - SUMMATION REPORT

| COMPONENT | MOL% | GPM |
|---|---|---|
| Hydrogen Sulfide* | 0.001 | |
| Nitrogen | 0.557 | |
| Carbon Dioxide | 0.659 | |
| Methane | 39.329 | |
| Ethane | 17.201 | 4.574 |
| Propane | 19.937 | 5.461 |
| Isobutane | 3.856 | 1.255 |
| n-Butane | 8.864 | 2.779 |
| 2-2 Dimethylpropane | 0.049 | 0.019 |
| Isopentane | 2.745 | 0.998 |
| n-Pentane | 2.971 | 1.071 |
| Hexanes | 2.041 | 0.838 |
| Heptanes Plus | 1.790 | 0.736 |
| Totals | 100.000 | 17.730 |

**Computed Real Characteristics Of Heptanes Plus:**

| | | |
|---|---|---|
| Specific Gravity | 3.402 | (Air=1) |
| Molecular Weight | 97.37 | |
| Gross Heating Value | 5085 | BTU/CF |

**Computed Real Characteristics Of Total Sample:**

| | | |
|---|---|---|
| Specific Gravity | 1.249 | (Air=1) |
| Compressibility (Z) | 0.9882 | |
| Molecular Weight | 35.74 | |
| Gross Heating Value | | |
| Dry Basis | 2055 | BTU/CF |
| Saturated Basis | 2020 | BTU/CF |

*Hydrogen Sulfide tested in laboratory by Stained Tube Method (GPA 2377)
Results: 0.377 Gr/100 CF, 6.0 PPMV or 0.001 Mol %

Base Conditions: 14.650 PSI & 60 Deg F

Certified: FESCO, Ltd. - Alice, Texas

Analyst: TJ
Processor: FC
Cylinder ID: FL-15

David Dannhaus 361-661-7015

## CHROMATOGRAPH EXTENDED ANALYSIS
## TOTAL REPORT

| COMPONENT | MOL % | GPM | WT % |
|---|---|---|---|
| Hydrogen Sulfide* | 0.001 | | 0.001 |
| Nitrogen | 0.557 | | 0.437 |
| Carbon Dioxide | 0.659 | | 0.812 |
| Methane | 39.329 | | 17.652 |
| Ethane | 17.201 | 4.574 | 14.473 |
| Propane | 19.937 | 5.461 | 24.600 |
| Isobutane | 3.856 | 1.255 | 6.271 |
| n-Butane | 8.864 | 2.779 | 14.416 |
| 2,2 Dimethylpropane | 0.049 | 0.019 | 0.099 |
| Isopentane | 2.745 | 0.998 | 5.542 |
| n-Pentane | 2.971 | 1.071 | 5.998 |
| 2,2 Dimethylbutane | 0.016 | 0.007 | 0.039 |
| Cyclopentane | 0.226 | 0.094 | 0.444 |
| 2,3 Dimethylbutane | 0.041 | 0.017 | 0.099 |
| 2 Methylpentane | 0.663 | 0.274 | 1.599 |
| 3 Methylpentane | 0.292 | 0.119 | 0.704 |
| n-Hexane | 0.803 | 0.328 | 1.936 |
| Methylcyclopentane | 0.306 | 0.105 | 0.721 |
| Benzene | 0.053 | 0.015 | 0.116 |
| Cyclohexane | 0.189 | 0.064 | 0.445 |
| 2-Methylhexane | 0.084 | 0.039 | 0.236 |
| 3-Methylhexane | 0.098 | 0.044 | 0.275 |
| 2,2,4 Trimethylpentane | 0.000 | 0.000 | 0.000 |
| Other C7's | 0.256 | 0.111 | 0.711 |
| n-Heptane | 0.239 | 0.110 | 0.670 |
| Methylcyclohexane | 0.177 | 0.071 | 0.486 |
| Toluene | 0.049 | 0.016 | 0.126 |
| Other C8's | 0.208 | 0.096 | 0.641 |
| n-Octane | 0.046 | 0.023 | 0.147 |
| Ethylbenzene | 0.004 | 0.002 | 0.012 |
| M & P Xylenes | 0.011 | 0.004 | 0.033 |
| O-Xylene | 0.002 | 0.001 | 0.006 |
| Other C9's | 0.050 | 0.025 | 0.177 |
| n-Nonane | 0.004 | 0.002 | 0.014 |
| Other C10's | 0.005 | 0.003 | 0.020 |
| n-Decane | 0.001 | 0.001 | 0.004 |
| Undecanes (11) | 0.008 | 0.005 | 0.038 |
| Totals | 100.000 | 17.730 | 100.000 |

**Computed Real Characteristics Of Total Sample:**

Specific Gravity ---------- 1.249 (Air=1)
Compressibility (Z) ---------- 0.9882
Molecular Weight ---------- 35.74

Gross Heating Value
Dry Basis ---------- 2055 BTU/CF
Saturated Basis ---------- 2020 BTU/CF

**FESCO, Ltd.**
**1100 Fesco Ave. - Alice, Texas 78332**

**For:** Ute Energy Upstream Holdings
P. O. Box 789
Fort Duchesne, Utah 84026

**Sample:** Ute Tribal 10-30-3-2E
Gas Evolved from Hydrocarbon Liquid Flashed
From 45 psig & 160 °F to 0 psig & 70 °F

Date Sampled: 11/02/2011 Job Number: 16135.001

## CHROMATOGRAPH EXTENDED ANALYSIS - SUMMATION REPORT

| COMPONENT | MOL% | GPM |
|---|---|---|
| Hydrogen Sulfide* | < 0.001 | |
| Nitrogen | 0.494 | |
| Carbon Dioxide | 0.716 | |
| Methane | 37.302 | |
| Ethane | 19.192 | 5.103 |
| Propane | 19.627 | 5.376 |
| Isobutane | 3.482 | 1.133 |
| n-Butane | 9.005 | 2.823 |
| 2-2 Dimethylpropane | 0.048 | 0.018 |
| Isopentane | 2.597 | 0.944 |
| n-Pentane | 3.362 | 1.212 |
| Hexanes | 2.303 | 0.945 |
| Heptanes Plus | 1.872 | 0.760 |
| Totals | 100.000 | 18.315 |

**Computed Real Characteristics Of Heptanes Plus:**

| | | |
|---|---|---|
| Specific Gravity | 3.363 | (Air=1) |
| Molecular Weight | 96.22 | |
| Gross Heating Value | 5015 | BTU/CF |

**Computed Real Characteristics Of Total Sample:**

| | | |
|---|---|---|
| Specific Gravity | 1.265 | (Air=1) |
| Compressibility (Z) | 0.9878 | |
| Molecular Weight | 36.20 | |
| Gross Heating Value | | |
| Dry Basis | 2080 | BTU/CF |
| Saturated Basis | 2045 | BTU/CF |

*Hydrogen Sulfide tested in laboratory by Stained Tube Method (GPA 2377)
Results: 0.063 Gr/100 CF, 1.0 PPMV or 0.0001 Mol %

Base Conditions: 14.650 PSI & 60 Deg F

Certified: FESCO, Ltd. - Alice, Texas

Analyst: TJ
Processor: AM
Cylinder ID: FL-7s

David Dannhaus 361-661-7015

## CHROMATOGRAPH EXTENDED ANALYSIS
## TOTAL REPORT

| COMPONENT | MOL % | GPM | WT % |
|---|---|---|---|
| Hydrogen Sulfide* | < 0.001 | | < 0.001 |
| Nitrogen | 0.494 | | 0.382 |
| Carbon Dioxide | 0.716 | | 0.870 |
| Methane | 37.302 | | 16.530 |
| Ethane | 19.192 | 5.103 | 15.940 |
| Propane | 19.627 | 5.376 | 23.906 |
| Isobutane | 3.482 | 1.133 | 5.590 |
| n-Butane | 9.005 | 2.823 | 14.457 |
| 2,2 Dimethylpropane | 0.048 | 0.018 | 0.096 |
| Isopentane | 2.597 | 0.944 | 5.175 |
| n-Pentane | 3.362 | 1.212 | 6.700 |
| 2,2 Dimethylbutane | 0.017 | 0.007 | 0.040 |
| Cyclopentane | 0.230 | 0.095 | 0.446 |
| 2,3 Dimethylbutane | 0.040 | 0.016 | 0.095 |
| 2 Methylpentane | 0.632 | 0.261 | 1.504 |
| 3 Methylpentane | 0.310 | 0.126 | 0.738 |
| n-Hexane | 1.074 | 0.439 | 2.556 |
| Methylcyclopentane | 0.325 | 0.111 | 0.756 |
| Benzene | 0.077 | 0.021 | 0.166 |
| Cyclohexane | 0.245 | 0.083 | 0.569 |
| 2-Methylhexane | 0.084 | 0.039 | 0.232 |
| 3-Methylhexane | 0.088 | 0.040 | 0.244 |
| 2,2,4 Trimethylpentane | 0.000 | 0.000 | 0.000 |
| Other C7's | 0.230 | 0.100 | 0.630 |
| n-Heptane | 0.284 | 0.130 | 0.786 |
| Methylcyclohexane | 0.206 | 0.082 | 0.559 |
| Toluene | 0.046 | 0.015 | 0.117 |
| Other C8's | 0.168 | 0.078 | 0.511 |
| n-Octane | 0.039 | 0.020 | 0.123 |
| Ethylbenzene | 0.002 | 0.001 | 0.006 |
| M & P Xylenes | 0.012 | 0.005 | 0.035 |
| O-Xylene | 0.002 | 0.001 | 0.006 |
| Other C9's | 0.034 | 0.017 | 0.119 |
| n-Nonane | 0.008 | 0.004 | 0.028 |
| Other C10's | 0.013 | 0.008 | 0.051 |
| n-Decane | 0.003 | 0.002 | 0.012 |
| Undecanes (11) | 0.006 | 0.004 | 0.025 |
| Totals | 100.000 | 18.315 | 100.000 |

**Computed Real Characteristics Of Total Sample:**

| | | |
|---|---|---|
| Specific Gravity | 1.265 | (Air=1) |
| Compressibility (Z) | 0.9878 | |
| Molecular Weight | 36.20 | |
| Gross Heating Value | | |
| Dry Basis | 2080 | BTU/CF |
| Saturated Basis | 2045 | BTU/CF |

# *QUESTAR APPLIED TECHNOLOGY*

**1210 D. Street, Rock Springs, Wyoming 82901**

**(307) 352-7292**

| | | | | |
|---|---|---|---|---|
| LIMS ID: | N/A | | Description: | Coleman Tribal 2-18-4-2E |
| Analysis Date/Time: | 6/27/2011 | 8:12 AM | Field: | Leland Bench |
| Analyst Initials: | PRP | | ML#: | Ute Energy |
| Instrument ID: | Instrument 1 | | GC Method: | Quesbtex |
| Data File: | QPC12.D | | | |
| Date Sampled: | 6/22/2011 | | | |

| Component | Mol% | Wt% | LV% |
|---|---|---|---|
| Methane | 78.3766 | 58.6881 | 68.9498 |
| Ethane | 9.8817 | 13.8690 | 13.7534 |
| Propane | 6.7479 | 13.8884 | 9.6562 |
| Isobutane | 0.9285 | 2.5189 | 1.5774 |
| n-Butane | 1.7060 | 4.6282 | 2.7933 |
| Neopentane | 0.0101 | 0.0341 | 0.0201 |
| Isopentane | 0.4236 | 1.4264 | 0.8052 |
| n-Pentane | 0.3980 | 1.3404 | 0.7486 |
| 2,2-Dimethylbutane | 0.0019 | 0.0078 | 0.0042 |
| 2,3-Dimethylbutane | 0.0252 | 0.1012 | 0.0535 |
| 2-Methylpentane | 0.0863 | 0.3471 | 0.1860 |
| 3-Methylpentane | 0.0357 | 0.1436 | 0.0756 |
| n-Hexane | 0.0995 | 0.4003 | 0.2125 |
| Heptanes | 0.1398 | 0.6137 | 0.2914 |
| Octanes | 0.0236 | 0.1253 | 0.0612 |
| Nonanes | 0.0113 | 0.0643 | 0.0301 |
| Decanes plus | 0.0022 | 0.0146 | 0.0070 |
| Nitrogen | 0.6365 | 0.8322 | 0.3624 |
| Carbon Dioxide | 0.4656 | 0.9564 | 0.4121 |
| Oxygen | 0.0000 | 0.0000 | 0.0000 |
| Hydrogen Sulfide | 0.0000 | 0.0000 | 0.0000 |
| Total | 100.0000 | 100.0000 | 100.0000 |

| Global Properties | | Units |
|---|---|---|
| Gross BTU/Real CF | 1284.6 | BTU/SCF at 60°F and14.73 psia |
| Sat.Gross BTU/Real CF | 1263.4 | BTU/SCF at 60°F and14.73 psia |
| Gas Compressibility (Z) | 0.9962 | |
| Specific Gravity | 0.7413 | air=1 |
| Avg Molecular Weight | 21.425 | gm/mole |
| Propane GPM | 1.849348 | gal/MCF |
| Butane GPM | 0.839526 | gal/MCF |
| Gasoline GPM | 0.460696 | gal/MCF |
| 26# Gasoline GPM | 0.998320 | gal/MCF |
| Total GPM | 3.150733 | gal/MCF |
| Base Mol% | 100.076 | %v/v |

| | | |
|---|---|---|
| Sample Temperature: | 132 | °F |
| Sample Pressure: | 71 | psig |
| H2SLength of Stain Tube | N/A | ppm |

| Component | Mol% | Wt% | LV% |
|---|---|---|---|
| Benzene | 0.0064 | 0.0235 | 0.0094 |
| Toluene | 0.0060 | 0.0259 | 0.0105 |
| Ethylbenzene | 0.0006 | 0.0029 | 0.0012 |
| M&P Xylene | 0.0021 | 0.0105 | 0.0043 |
| O-Xylene | 0.0005 | 0.0023 | 0.0009 |
| 2,2,4-Trimethylpentane | 0.0083 | 0.0442 | 0.0216 |
| Cyclopentane | 0.0000 | 0.0000 | 0.0000 |
| Cyclohexane | 0.0210 | 0.0825 | 0.0371 |
| Methylcyclohexane | 0.0189 | 0.0868 | 0.0395 |
| Description: | Coleman Tribal 2-18-4-2E | | |

GRI GlyCalc Information

| Component | Mol% | Wt% | LV% |
|---|---|---|---|
| Carbon Dioxide | 0.4656 | 0.9564 | 0.4121 |
| Hydrogen Sulfide | 0.0000 | 0.0000 | 0.0000 |
| Nitrogen | 0.6365 | 0.8322 | 0.3624 |
| Methane | 78.3766 | 58.6881 | 68.9498 |
| Ethane | 9.8817 | 13.8690 | 13.7534 |
| Propane | 6.7479 | 13.8884 | 9.6562 |
| Isobutane | 0.9285 | 2.5189 | 1.5774 |
| n-Butane | 1.7060 | 4.6282 | 2.7933 |
| Isopentane | 0.4337 | 1.4605 | 0.8253 |
| n-Pentane | 0.3980 | 1.3404 | 0.7486 |
| Cyclopentane | 0.0000 | 0.0000 | 0.0000 |
| n-Hexane | 0.0995 | 0.4003 | 0.2125 |
| Cyclohexane | 0.0210 | 0.0825 | 0.0371 |
| Other Hexanes | 0.1491 | 0.5997 | 0.3193 |
| Heptanes | 0.0792 | 0.3508 | 0.1733 |
| Methylcyclohexane | 0.0189 | 0.0868 | 0.0395 |
| 2,2,4 Trimethylpentane | 0.0083 | 0.0442 | 0.0216 |
| Benzene | 0.0064 | 0.0235 | 0.0094 |
| Toluene | 0.0060 | 0.0259 | 0.0105 |
| Ethylbenzene | 0.0006 | 0.0029 | 0.0012 |
| Xylenes | 0.0026 | 0.0128 | 0.0052 |
| C8+ Heavies | 0.0339 | 0.1885 | 0.0919 |
| Subtotal | 100.0000 | 100.0000 | 100.0000 |
| Oxygen | 0.0000 | 0.0000 | 0.0000 |
| Total | 100.0000 | 100.0000 | 100.0000 |

# ATTACHMENT B

# FACILITY EQUIPMENT EMISSION CALCULATIONS

**Company:** Crescent Point Energy U.S. Corp
**Facility:** Horseshoe Bend Fed 15-29-6-21E

| | | |
|---|---|---|
| **Oil Production:** | 750 | bbl/day |
| | 273,750 | bbl/year |
| **Gas Production:** | 250 | Mscf/day |
| | 91,250 | Mscf/year |

## TABLE 1: Uncontrolled Potential to Emit Summary Sheet

| Emissions Source | $NO_x$ | | CO | | VOC | | Total HAPs | |
|---|---|---|---|---|---|---|---|---|
| | lb/hr | tpy | lb/hr | tpy | lb/hr | tpy | lb/hr | tpy |
| Crude Oil Storage Tanks - TK1 - TK3 | n/a | n/a | n/a | n/a | 21.25 | 93.09 | 0.83 | 3.64 |
| Produced Water Tank(s) | n/a | n/a | n/a | n/a | n/a | n/a | n/a | n/a |
| Heater/Treater(s) | 0.14 | 0.59 | 0.11 | 0.50 | 0.01 | 0.03 | 0.00 | 0.01 |
| Tank Heaters | 0.33 | 1.42 | 0.27 | 1.20 | 0.02 | 0.08 | 0.01 | 0.03 |
| Oil Tank Truck Loading | n/a | n/a | n/a | n/a | 5.54 | 5.84 | 0.05 | 0.23 |
| Combustor(s) | 0.04 | 0.20 | 0.20 | 0.89 | 0.09 | 0.40 | n/a | n/a |
| Fugitive Emissions | n/a | n/a | n/a | n/a | 0.15 | 0.67 | 0.01 | 0.02 |
| Methanol Tank - 55-gallon drum | n/a | n/a | n/a | n/a | 0.00 | 0.00 | n/a | n/a |
| Glycol Tank - 55-gallon drum | n/a | n/a | n/a | n/a | 0.00 | 0.00 | n/a | n/a |
| Engine 1 (E-1) | 0.99 | 4.33 | 1.98 | 8.66 | 1.15 | 5.03 | 0.10 | 0.43 |
| **Total** | **1.49** | **6.54** | **2.57** | **11.25** | **28.22** | **105.14** | **1.00** | **4.36** |

| Emissions Source | PM | | $PM_{10}$ | | $PM_{2.5}$ | | $SO_2$ | |
|---|---|---|---|---|---|---|---|---|
| | lb/hr | tpy | lb/hr | tpy | lb/hr | tpy | lb/hr | tpy |
| Crude Oil Storage Tanks - TK1 - TK3 | n/a | n/a | n/a | n/a | n/a | n/a | n/a | n/a |
| Produced Water Tank(s) | n/a | n/a | n/a | n/a | n/a | n/a | n/a | n/a |
| Heater/Treater(s) | 0.01 | 0.05 | 0.01 | 0.05 | 0.01 | 0.05 | n/a | n/a |
| Tank Heaters | 0.02 | 0.11 | 0.02 | 0.11 | 0.02 | 0.11 | n/a | n/a |
| Oil Tank Truck Loading | n/a | n/a | n/a | n/a | n/a | n/a | n/a | n/a |
| Combustor(s) | n/a | n/a | n/a | n/a | n/a | n/a | n/a | n/a |
| Fugitive Emissions | n/a | n/a | n/a | n/a | n/a | n/a | n/a | n/a |
| Methanol Tank - 55-gallon drum | n/a | n/a | n/a | n/a | n/a | n/a | n/a | n/a |
| Glycol Tank - 55-gallon drum | n/a | n/a | n/a | n/a | n/a | n/a | n/a | n/a |
| Engine 1 (E-1) | 0.03 | 0.14 | 0.03 | 0.13 | 0.03 | 0.13 | 0.00 | 0.00 |
| **Total** | **0.07** | **0.29** | **0.07** | **0.29** | **0.07** | **0.29** | **0.00** | **0.00** |

**Notes:**
BBL = Barrels
lb/hr = Pounds per hour
tpy = Tons per year
PM = Particulate matter
PM10 = Particulate matter of 10 microns or less
PM2.5 = Particulate matter of 2.5 microns or less
NOx = Nitrogen oxides
CO = Carbon monoxide
VOC = Volatile organic compounds
HAPs = Hazardous air pollutants
SO2 = Sulfur dioxides
n/a = Not applicable

**Company:** Crescent Point Energy U.S. Corp
**Facility:** Horseshoe Bend Fed 15-29-6-21E

| | | |
|---|---|---|
| **Oil Production:** | 750 | bbl/day |
| | 273,750 | bbl/year |
| **Gas Production:** | 250 | Mscf/day |
| | 91,250 | Mscf/year |

## TABLE 1: Uncontrolled Potential to Emit Summary Sheet (Continued)

| Emissions Source | Benzene | | Toluene | | Ethylbenzene | | Xylene | |
|---|---|---|---|---|---|---|---|---|
| | lb/hr | tpy | lb/hr | tpy | lb/hr | tpy | lb/hr | tpy |
| Crude Oil Storage Tanks - TK1 - TK3 | 0.041 | 0.178 | 0.036 | 0.156 | 0.002 | 0.010 | 0.011 | 0.047 |
| Produced Water Tank(s) | n/a | n/a | n/a | n/a | n/a | n/a | n/a | n/a |
| Heater/Treater(s) | 0.000 | 0.000 | 0.000 | 0.000 | n/a | n/a | n/a | n/a |
| Tank Heaters | 0.000 | 0.000 | 0.000 | 0.000 | n/a | n/a | n/a | n/a |
| Oil Tank Truck Loading | 0.003 | 0.011 | 0.002 | 0.010 | 0.000 | 0.001 | 0.001 | 0.003 |
| Combustor(s) | n/a | n/a | n/a | n/a | n/a | n/a | n/a | n/a |
| Fugitive Emissions | 0.000 | 0.001 | 0.000 | 0.001 | 0.000 | 0.000 | 0.000 | 0.000 |
| Methanol Tank - 55-gallon drum | n/a | n/a | n/a | n/a | n/a | n/a | n/a | n/a |
| Glycol Tank - 55-gallon drum | n/a | n/a | n/a | n/a | n/a | n/a | n/a | n/a |
| Engine 1 (E-1) | 0.005 | 0.022 | n/a | n/a | n/a | n/a | n/a | n/a |
| **Total** | **0.049** | **0.213** | **0.038** | **0.167** | **0.003** | **0.011** | **0.011** | **0.050** |

| Emissions Source | Acetaldehyde | | Acrolein | | n-Hexane | | Formaldehyde | |
|---|---|---|---|---|---|---|---|---|
| | lb/hr | tpy | lb/hr | tpy | lb/hr | tpy | lb/hr | tpy |
| Crude Oil Storage Tanks - TK1 - TK3 | n/a | n/a | n/a | n/a | 0.742 | 3.252 | n/a | n/a |
| Produced Water Tank(s) | n/a | n/a | n/a | n/a | n/a | n/a | n/a | n/a |
| Heater/Treater(s) | n/a | n/a | n/a | n/a | 0.002 | 0.011 | 0.000 | 0.000 |
| Tank Heaters | n/a | n/a | n/a | n/a | 0.006 | 0.026 | 0.000 | 0.001 |
| Oil Tank Truck Loading | n/a | n/a | n/a | n/a | 0.047 | 0.204 | n/a | n/a |
| Combustor(s) | n/a | n/a | n/a | n/a | n/a | n/a | n/a | n/a |
| Fugitive Emissions | n/a | n/a | n/a | n/a | 0.004 | 0.019 | n/a | n/a |
| Methanol Tank - 55-gallon drum | n/a | n/a | n/a | n/a | n/a | n/a | n/a | n/a |
| Glycol Tank - 55-gallon drum | n/a | n/a | n/a | n/a | n/a | n/a | n/a | n/a |
| Engine 1 (E-1) | 0.009 | 0.039 | 0.008 | 0.037 | n/a | n/a | 0.066 | 0.288 |
| **Total** | **0.009** | **0.039** | **0.008** | **0.037** | **0.802** | **3.512** | **0.066** | **0.290** |

**Notes:**
BBL = Barrels
lb/hr = Pounds per hour
tpy = Tons per year
PM = Particulate matter
PM10 = Particulate matter of 10 microns or less
PM2.5 = Particulate matter of 2.5 microns or less
NOx = Nitrogen oxides
CO = Carbon monoxide
VOC = Volatile organic compounds
HAPs = Hazardous air pollutants
SO2 = Sulfur dioxides
n/a = Not applicable

**Company:** Crescent Point Energy U.S. Corp
**Facility:** Horseshoe Bend Fed 15-29-6-21E

**Oil Production:** 750 bbl/day
273,750 bbl/year
**Gas Production:** 250 Mscf/day
91,250 Mscf/year

## TABLE 2: Total Actual Emissions Summary Sheet

| Emissions Source | $NO_x$ | | CO | | VOC | | Total HAPs | |
|---|---|---|---|---|---|---|---|---|
| | lb/hr | tpy | lb/hr | tpy | lb/hr | tpy | lb/hr | tpy |
| Crude Oil Storage Tanks - TK1 - TK3 | n/a | n/a | n/a | n/a | 1.06 | 4.65 | 0.04 | 0.18 |
| Produced Water Tank(s) | n/a | n/a | n/a | n/a | n/a | n/a | n/a | n/a |
| Heater/Treater(s) | 0.14 | 0.59 | 0.11 | 0.50 | 0.01 | 0.03 | 0.00 | 0.01 |
| Tank Heaters | 0.33 | 1.42 | 0.27 | 1.20 | 0.02 | 0.08 | 0.01 | 0.03 |
| Oil Tank Truck Loading | n/a | n/a | n/a | n/a | 5.54 | 5.84 | 0.05 | 0.23 |
| Combustor(s) | 0.04 | 0.20 | 0.20 | 0.89 | 0.09 | 0.40 | n/a | n/a |
| Fugitive Emissions | n/a | n/a | n/a | n/a | 0.15 | 0.67 | 0.01 | 0.02 |
| Methanol Tank - 55-gallon drum | n/a | n/a | n/a | n/a | 0.00 | 0.00 | n/a | n/a |
| Glycol Tank - 55-gallon drum | n/a | n/a | n/a | n/a | 0.00 | 0.00 | n/a | n/a |
| Engine 1 (E-1) | 0.99 | 4.33 | 1.98 | 8.66 | 0.69 | 3.03 | 0.05 | 0.21 |
| **Total** | **1.49** | **6.54** | **2.57** | **11.25** | **7.57** | **14.71** | **0.16** | **0.69** |

| Emissions Source | PM | | $PM_{10}$ | | $PM_{2.5}$ | | $SO_2$ | |
|---|---|---|---|---|---|---|---|---|
| | lb/hr | tpy | lb/hr | tpy | lb/hr | tpy | lb/hr | tpy |
| Crude Oil Storage Tanks - TK1 - TK3 | n/a | n/a | n/a | n/a | n/a | n/a | n/a | n/a |
| Produced Water Tank(s) | n/a | n/a | n/a | n/a | n/a | n/a | n/a | n/a |
| Heater/Treater(s) | 0.01 | 0.05 | 0.01 | 0.05 | 0.01 | 0.05 | n/a | n/a |
| Tank Heaters | 0.02 | 0.11 | 0.02 | 0.11 | 0.02 | 0.11 | n/a | n/a |
| Oil Tank Truck Loading | n/a | n/a | n/a | n/a | n/a | n/a | n/a | n/a |
| Combustor(s) | n/a | n/a | n/a | n/a | n/a | n/a | n/a | n/a |
| Fugitive Emissions | n/a | n/a | n/a | n/a | n/a | n/a | n/a | n/a |
| Methanol Tank - 55-gallon drum | n/a | n/a | n/a | n/a | n/a | n/a | n/a | n/a |
| Glycol Tank - 55-gallon drum | n/a | n/a | n/a | n/a | n/a | n/a | n/a | n/a |
| Engine 1 (E-1) | 0.03 | 0.14 | 0.03 | 0.13 | 0.03 | 0.13 | 0.00 | 0.00 |
| **Total** | **0.07** | **0.29** | **0.07** | **0.29** | **0.07** | **0.29** | **0.00** | **0.00** |

Oil tank emissions are routed to a combustor with a 95% destruction efficiency.

**Notes:**

BBL = Barrels
lb/hr = Pounds per hour
tpy = Tons per year
PM = Particulate matter
PM10 = Particulate matter of 10 microns or less
PM2.5 = Particulate matter of 2.5 microns or less

NOx = Nitrogen oxides
CO = Carbon monoxide
VOC = Volatile organic compounds
HAPs = Hazardous air pollutants
SO2 = Sulfur dioxides
n/a = Not applicable

**Company:** Crescent Point Energy U.S. Corp
**Facility:** Horseshoe Bend Fed 15-29-6-21E

**Oil Production:** 750 bbl/day
273,750 bbl/year
**Gas Production:** 250 Mscf/day
91,250 Mscf/year

## TABLE 2: Total Actual Emissions Summary Sheet (Continued)

| Emissions Source | Benzene | | Toluene | | Ethylbenzene | | Xylene | |
|---|---|---|---|---|---|---|---|---|
| | lb/hr | tpy | lb/hr | tpy | lb/hr | tpy | lb/hr | tpy |
| Crude Oil Storage Tanks - TK1 - TK3 | 0.00 | 0.01 | 0.00 | 0.01 | 0.00 | 0.00 | 0.00 | 0.00 |
| Produced Water Tank(s) | n/a | n/a | n/a | n/a | n/a | n/a | n/a | n/a |
| Heater/Treater(s) | 0.000 | 0.000 | 0.000 | 0.000 | n/a | n/a | n/a | n/a |
| Tank Heaters | 0.000 | 0.000 | 0.000 | 0.000 | n/a | n/a | n/a | n/a |
| Oil Tank Truck Loading | 0.003 | 0.011 | 0.002 | 0.010 | 0.000 | 0.001 | 0.001 | 0.003 |
| Combustor(s) | n/a | n/a | n/a | n/a | n/a | n/a | n/a | n/a |
| Fugitive Emissions | 0.000 | 0.001 | 0.000 | 0.001 | 0.000 | 0.000 | 0.000 | 0.000 |
| Methanol Tank - 55-gallon drum | n/a | n/a | n/a | n/a | n/a | n/a | n/a | n/a |
| Glycol Tank - 55-gallon drum | n/a | n/a | n/a | n/a | n/a | n/a | n/a | n/a |
| Engine 1 (E-1) | 0.003 | 0.011 | n/a | n/a | n/a | n/a | n/a | n/a |
| **Total** | **0.007** | **0.032** | **0.004** | **0.019** | **0.000** | **0.001** | **0.001** | **0.006** |

| Emissions Source | Acetaldehyde | | Acrolein | | n-Hexane | | Formaldehyde | |
|---|---|---|---|---|---|---|---|---|
| | lb/hr | tpy | lb/hr | tpy | lb/hr | tpy | lb/hr | tpy |
| Crude Oil Storage Tanks - TK1 - TK3 | n/a | n/a | n/a | n/a | 0.04 | 0.16 | n/a | n/a |
| Produced Water Tank(s) | n/a | n/a | n/a | n/a | n/a | n/a | n/a | n/a |
| Heater/Treater(s) | n/a | n/a | n/a | n/a | 0.002 | 0.011 | 0.000 | 0.000 |
| Tank Heaters | n/a | n/a | n/a | n/a | 0.006 | 0.026 | 0.000 | 0.001 |
| Oil Tank Truck Loading | n/a | n/a | n/a | n/a | 0.047 | 0.204 | n/a | n/a |
| Combustor(s) | n/a | n/a | n/a | n/a | n/a | n/a | n/a | n/a |
| Fugitive Emissions | n/a | n/a | n/a | n/a | 0.004 | 0.019 | n/a | n/a |
| Methanol Tank - 55-gallon drum | n/a | n/a | n/a | n/a | n/a | n/a | n/a | n/a |
| Glycol Tank - 55-gallon drum | n/a | n/a | n/a | n/a | n/a | n/a | n/a | n/a |
| Engine 1 (E-1) | 0.004 | 0.020 | 0.004 | 0.018 | n/a | n/a | 0.033 | 0.144 |
| **Total** | **0.004** | **0.020** | **0.004** | **0.018** | **0.096** | **0.422** | **0.033** | **0.146** |

**Notes:**
BBL = Barrels
lb/hr = Pounds per hour
tpy = Tons per year
PM = Particulate matter
PM10 = Particulate matter of 10 microns or less
PM2.5 = Particulate matter of 2.5 microns or less
NOx = Nitrogen oxides
CO = Carbon monoxide
VOC = Volatile organic compounds
HAPs = Hazardous air pollutants
SO2 = Sulfur dioxides
n/a = Not applicable

**Crescent Point Energy U.S. Corp**
**Horseshoe Bend Fed 15-29-6-21E**
**Average Oil Analysis Detail Sheet**

| Mole (Vol.) Percent (%) | Component | Wellsite Name | | |
|---|---|---|---|---|
| | | Ute Tribal 15-18-4-2E | Ute Tribal 10-30-3-2E | Ute Tribal 1-5-4-2E |
| 30.3083% | Methane | 14.2940% | 37.3020% | 39.3290% |
| 17.8703% | Ethane | 17.2180% | 19.1920% | 17.2010% |
| *48.1787%* | *Total HC (Non-VOC)* | *31.5120%* | *56.4940%* | *56.5300%* |
| | | | | |
| 22.8830% | Propane | 29.0850% | 19.6270% | 19.9370% |
| 4.5973% | i-Butane | 6.4540% | 3.4820% | 3.8560% |
| 10.4910% | n-Butane | 13.6040% | 9.0050% | 8.8640% |
| 3.3380% | i-Pentane | 4.6720% | 2.5970% | 2.7450% |
| 3.9887% | n-Pentane | 5.0800% | 3.6400% | 3.2460% |
| 1.9680% | Hexanes | 2.8280% | 1.5690% | 1.5070% |
| 0.9570% | Heptanes | 1.1250% | 0.8920% | 0.8540% |
| 0.2323% | Octanes | 0.2360% | 0.2070% | 0.2540% |
| 0.0470% | Nonanes | 0.0450% | 0.0420% | 0.0540% |
| 0.0140% | Decanes+ | 0.0060% | 0.0220% | 0.0140% |
| 0.0693% | Benzene | 0.0780% | 0.0770% | 0.0530% |
| 0.0513% | Toluene | 0.0590% | 0.0460% | 0.0490% |
| 0.0030% | Ethylbenzene | 0.0030% | 0.0020% | 0.0040% |
| 0.0133% | Xylene | 0.0130% | 0.0140% | 0.0130% |
| 1.1453% | n-Hexane | 1.5590% | 1.0740% | 0.8030% |
| 0.0000% | 2,2,4-Trimethylpentane | 0.0000% | 0.0000% | 0.0000% |
| *49.7987%* | *Total NMNE VOC [1]* | *64.8470%* | *42.2960%* | *42.2530%* |
| | | | | |
| 0.5917% | Carbon Dioxide | 0.4000% | 0.7160% | 0.6590% |
| 1.4307% | Nitrogen | 3.2410% | 0.4940% | 0.5570% |
| 0.0005% | Hydrogen Sulfide | 0.0004% | 0.0001% | 0.0010% |
| 0.0000% | Helium | 0.0000% | 0.0000% | 0.0000% |
| **100.0002%** | | **100.0004%** | **100.0001%** | **100.0000%** |

| | | | | |
|---|---|---|---|---|
| 158.33 | Separator Temperature in degrees F | 160 | 160 | 155 |
| 40.33 | Separator Pressure in psia | 30 | 45 | 46 |
| 34.44 | API Gravity | 32.82 | 36.89 | 33.61 |
| 1.37 | Gas Specific Gravity | 1.599 | 1.265 | 1.249 |
| 39.12 | Molecular Wt | 45.41 | 36.20 | 35.74 |
| 9.03 | Gas-to-Oil Ratio (scf/bbl) | 6.80 | 11.50 | 8.80 |
| 2,193 | LHV BTU Content (Btu/scf): | 2,513 | 2,045 | 2,020 |

1 NMNE VOC = Non-methane, non-ethane volatile organic compounds

**Crescent Point Energy U.S. Corp**
**Horseshoe Bend Fed 15-29-6-21E**
**LOW PRESSURE GAS COMPOSITION CALCULATIONS**
**(REPRESENTATIVE SAMPLE COLLECTED FROM COLEMAN TRIBAL 2-18-4-2E WELLSITE ON 6/27/2011)**

| Component | Molecular Weight (lb/lb-mol) | Mole (Vol.) Percent (%) | Mole Frac. | Gas Weight (lb/lb-mol) | Weight Percent (%) | LHV BTU Content | |
|---|---|---|---|---|---|---|---|
| | | | | | | Btu/scf | Btu/scf*Mole Frac |
| Methane | 16.043 | 78.3766% | 0.78377 | 12.57 | 58.680% | 909.4 | 712.8 |
| Ethane | 30.069 | 9.8817% | 0.09882 | 2.97 | 13.867% | 1618.7 | 160.0 |
| *Total HC (Non-VOC)* | | *88.2583%* | *0.88258* | *15.55* | *72.546%* | *2528.1* | *872.7* |
| | | | | | | | |
| Propane | 44.096 | 6.7479% | 0.06748 | 2.98 | 13.886% | 2314.90 | 156.21 |
| i-Butane | 58.122 | 0.9285% | 0.00929 | 0.54 | 2.518% | 3000.40 | 27.86 |
| n-Butane | 58.122 | 1.7060% | 0.01706 | 0.99 | 4.627% | 3010.80 | 51.36 |
| i-Pentane | 72.150 | 0.4337% | 0.00434 | 0.31 | 1.460% | 3699.00 | 16.04 |
| n-Pentane | 72.150 | 0.3980% | 0.00398 | 0.29 | 1.340% | 3703.90 | 14.74 |
| Hexanes | 86.110 | 0.1701% | 0.00170 | 0.15 | 0.684% | 4403.90 | 7.49 |
| Heptanes | 100.210 | 0.0981% | 0.00098 | 0.10 | 0.459% | 5100.30 | 5.00 |
| Octanes | 114.229 | 0.0339% | 0.00034 | 0.04 | 0.181% | 5796.20 | 1.96 |
| Nonanes | 128.260 | 0.0000% | 0.00000 | 0.00 | 0.000% | 6493.60 | 0.00 |
| Decanes+ | 142.290 | 0.0000% | 0.00000 | 0.00 | 0.000% | 7189.90 | 0.00 |
| Benzene | 78.120 | 0.0064% | 0.00006 | 0.00 | 0.023% | 0.00 | 0.00 |
| Toluene | 92.130 | 0.0060% | 0.00006 | 0.01 | 0.026% | 0.00 | 0.00 |
| Ethylbenzene | 106.160 | 0.0006% | 0.00001 | 0.00 | 0.003% | 0.00 | 0.00 |
| Xylene | 106.160 | 0.0026% | 0.00003 | 0.00 | 0.013% | 0.00 | 0.00 |
| n-Hexane | 86.177 | 0.0995% | 0.00100 | 0.09 | 0.400% | 0.00 | 0.00 |
| 2,2,4-Trimethylpentane | 114.230 | 0.0083% | 0.00008 | 0.01 | 0.044% | 0.00 | 0.00 |
| *Total NMNE VOC* | | *10.64%* | *0.10640* | *5.50* | *25.66%* | *44712.90* | *280.67* |
| | | | | | | | |
| Carbon Dioxide | 44.01 | 0.4656% | 0.00466 | 0.20 | 0.956% | 0 | 0 |
| Nitrogen | 28.02 | 0.6365% | 0.00637 | 0.18 | 0.832% | 0 | 0 |
| Hydrogen Sulfide | 34.08 | 0.0000% | 0.00000 | 0.00 | 0.000% | 586.8 | 0 |
| Helium | 4.00 | 0.0000% | 0.00000 | 0.00 | 0.000% | 0 | 0 |
| Oxygen | 31.999 | 0.0000% | 0.00000 | 0.00 | 0.000% | 0 | 0 |
| | **Totals** | **100.00%** | **100.00%** | **21.43** | **100.00%** | | **1153.39** |

**Fraction of NMNE VOC[1]:** **0.1064**
**Gas Specific Gravity:** **0.73966**
**LHV BTU Content (Btu/scf):** **1153.39**

1 NMNE VOC = Non-methane, non-ethane volatile organic compounds

**Crescent Point Energy U.S. Corp**
**Horseshoe Bend Fed 15-29-6-21E - Flash Gas Analysis**
**Hydrocarbon Liquids Tank Detail Sheet**

| | | | | |
|---|---|---|---|---|
| Source ID Number | TK1 - TK3 | | Gas Flashed Per Day | 6,775.00 scf/day |
| Potential operation | 8760 hr/yr | | Gas Flashed Per Year | 2472.88 Mscf/year |
| Daily Threshold Production | 750 bpd | | | |
| Annual throughput | 273,750 bbl/yr | | Gas-to-Oil Ratio (scf/bbl) | 9.03 scf/bbl |

| Component | Molecular Weight (lb/lb-mole) | Mole (Vol.) Percent (%) | Gas Weight (lb/lb-mol) | Weight Percent (%) | Flash Rate (Mscf/day) | Flash Rate (lb/hr) | Flash Rate (tons/yr) |
|---|---|---|---|---|---|---|---|
| Methane | 16.043 | 30.3083% | 4.8624 | 12.4197% | 2.0534 | 3.622 | 15.8628 |
| Ethane | 30.069 | 17.8703% | 5.3734 | 13.7251% | 1.2107 | 4.002 | 17.5301 |
| Propane | 44.097 | 22.8830% | 10.0907 | 25.7742% | 1.5503 | 7.516 | 32.9196 |
| i-Butane | 58.124 | 4.5973% | 2.6722 | 6.8254% | 0.3115 | 1.990 | 8.7175 |
| n-Butane | 58.124 | 10.4910% | 6.0978 | 15.5753% | 0.7108 | 4.542 | 19.8932 |
| i-Pentane | 72.151 | 3.3380% | 2.4084 | 6.1517% | 0.2261 | 1.794 | 7.8571 |
| n-Pentane | 72.151 | 3.9887% | 2.8779 | 7.3508% | 0.2702 | 2.144 | 9.3886 |
| Hexanes | 86.178 | 1.9680% | 1.6960 | 4.3320% | 0.1333 | 1.263 | 5.5329 |
| Heptanes | 100.205 | 0.9570% | 0.9590 | 2.4494% | 0.0648 | 0.714 | 3.1285 |
| Octanes | 114.232 | 0.2323% | 0.2654 | 0.6779% | 0.0157 | 0.198 | 0.8658 |
| Nonanes | 128.259 | 0.0470% | 0.0603 | 0.1540% | 0.0032 | 0.045 | 0.1967 |
| Decanes + | 142.286 | 0.0140% | 0.0199 | 0.0509% | 0.0009 | 0.015 | 0.0650 |
| Benzene | 78.114 | 0.0693% | 0.0542 | 0.1383% | 0.0047 | 0.040 | 0.1767 |
| Toluene | 92.141 | 0.0513% | 0.0473 | 0.1208% | 0.0035 | 0.035 | 0.1543 |
| Ethylbenzene | 106.168 | 0.0030% | 0.0032 | 0.0081% | 0.0002 | 0.002 | 0.0104 |
| Xylenes | 106.168 | 0.0133% | 0.0142 | 0.0362% | 0.0009 | 0.011 | 0.0462 |
| n-Hexane | 86.178 | 1.1453% | 0.9870 | 2.5211% | 0.0776 | 0.735 | 3.2200 |
| 2,2,4-Trimethylpentane | 114.229 | 0.0000% | 0.0000 | 0.0000% | 0.0000 | 0.000 | 0.0000 |
| Carbon Dioxide | 44.010 | 0.5917% | 0.2604 | 0.6651% | 0.0401 | 0.194 | 0.8495 |
| Nitrogen | 28.013 | 1.4307% | 0.4008 | 1.0237% | 0.0969 | 0.299 | 1.3075 |
| Hydogen Sulfide | 34.076 | 0.0005% | 0.0002 | 0.0004% | 0.0000 | 0.000 | 0.0006 |
| Helium | 4.003 | 0.0000% | 0.0000 | 0.0000% | 0.0000 | 0.000 | 0.0000 |
| Oxygen | 31.999 | 0.0000% | 0.0000 | 0.0000% | 0.0000 | 0.000 | 0.0000 |
| **VOC TOTAL** | | **49.80%** | **28.2533** | **72.17%** | **3.37** | **21.04** | **92.17** |
| **HAP SUBTOTAL** | | **1.28%** | **1.1058** | **2.82%** | **0.09** | **0.82** | **3.608** |
| TOTAL | | 100.00% | 39.1504 | 100.00% | 6.78 | 29.16 | 127.72 |

| | |
|---|---|
| **Separator Temperature (° F):** | 158.33 |
| **Separator Pressure (psia):** | 40.33 |
| **API Gravity:** | 28.10 |
| **Gas Specific Gravity:** | 1.37 |
| **Molecular Weight:** | 39.12 |
| **Gas-to-Oil Ratio (scf/bbl):** | 9.03 |

**Crescent Point Energy U.S. Corp**
**Horseshoe Bend Fed 15-29-6-21E**
**Flash Gas Tank Emissions Summary Detail Sheet**

| | | | | |
|---|---|---|---|---|
| Source ID Number | TK1 - TK3 | Potential operation | 8,760 | hr/yr |
| | | Recent Production | 750.0 | bpd |
| Tank Description | Crude Oil Storage | | | |
| | | Annual throughput | 273,750.0 | bbl/yr |
| | | | 11,497,500 | gal/yr |

**Potential Flash Emissions**

| Pollutant | Hrs of Operation (hrs/yr) | Estimated Flash Losses (lb/hr) | (tpy) | (lb/yr) | Source of Emission Factor | Ratio of HAPs to VOC Emissions |
|---|---|---|---|---|---|---|
| VOC | 8,760 | 21.0440 | 92.1726 | 184,345.28 | Flash Gas Analysis | - |
| HAPs | 8,760 | 0.8237 | 3.6076 | 7,215.21 | Flash Gas Analysis | 3.9140% |
| Benzene | 8,760 | 0.0403 | 0.1767 | 353.37 | Flash Gas Analysis | 0.1917% |
| Toluene | 8,760 | 0.0352 | 0.1543 | 308.61 | Flash Gas Analysis | 0.1674% |
| Ethlybenzene | 8,760 | 0.0024 | 0.0104 | 20.78 | Flash Gas Analysis | 0.0113% |
| Xylene | 8,760 | 0.0105 | 0.0462 | 92.36 | Flash Gas Analysis | 0.0501% |
| N-Hexane | 8,760 | 0.7352 | 3.2200 | 6,440.08 | Flash Gas Analysis | 3.4935% |
| Methane[2] | 8,760 | 3.6217 | 15.8628 | 31,725.65 | Flash Gas Analysis | 17.2099% |
| Carbon Dioxide[2] | 8,760 | 0.1939 | 0.8495 | 1,698.99 | Flash Gas Analysis | 0.9216% |
| Nitrous Oxide | 8,760 | n/a | n/a | n/a | No data available | |

## Crescent Point Energy U.S. Corp
## Horseshoe Bend Fed 15-29-6-21E
### Storage, Working, and Breathing Emissions Detail Sheet

| | | | | |
|---|---|---|---|---|
| Source ID Number | TK1 - TK3 | Potential operation | 8,760 | hr/yr |
| | | Recent Production | 750.0 | bpd |
| Tank Description | 3 1000-bbl tanks | | | |
| Tank Usage | Crude Oil Storage | Annual throughput | 273,750.0 | bbl/yr |
| Tank Capacity | 3,000 bbl | | 11,497,500 | gal/yr |
| Number of tanks | 3 | | | |

**Potential emissions per tank**

| Pollutant | Hrs of Operation (hrs/yr) | Estimated Storage/Working/Breathing Losses (lb/hr) | (tpy) | (lb/yr) | Source of Emission Factor |
|---|---|---|---|---|---|
| VOC - Working | 8,760 | 0.07 | 0.31 | 612.42 | TANKS 4.0.9D |
| VOC - Breathing | 8,760 | 0.00 | 0.00 | 0.00 | TANKS 4.0.9D |
| Total | | 0.07 | 0.31 | 612.42 | TANKS 4.0.9D |

**Potential emissions all tanks**

| Pollutant | Hrs of Operation (hrs/yr) | Estimated Flash Losses (lb/hr) | (tpy) | (lb/yr) | Source of Emission Factor | Ratio of HAPs to VOC Emissions |
|---|---|---|---|---|---|---|
| VOC | 8,760 | 0.21 | 0.92 | 1837.3 | TANKS 4.0.9D | - |
| HAPs | 8,760 | 0.01 | 0.036 | 71.9 | Flash Gas Analysis | 3.9140% |
| Benzene | 8,760 | 0.0004 | 0.002 | 3.5 | Flash Gas Analysis | 0.1917% |
| Toluene | 8,760 | 0.0004 | 0.002 | 3.1 | Flash Gas Analysis | 0.1674% |
| Ethlybenzene | 8,760 | 0.0000 | 0.000 | 0.2 | Flash Gas Analysis | 0.0113% |
| Xylene | 8,760 | 0.0001 | 0.000 | 0.9 | Flash Gas Analysis | 0.0501% |
| N-Hexane | 8,760 | 0.0073 | 0.032 | 64.2 | Flash Gas Analysis | 3.4935% |
| Methane | 8,760 | 0.0000 | 0.000 | 0.0 | Flash Gas Analysis | 17.2099% |
| Carbon dioxide | 8,760 | 0.0000 | 0.000 | 0.0 | Flash Gas Analysis | 0.9216% |
| Nitrous Oxides | | n/a | n/a | n/a | n/a | 0.0000% |

[1] See TANKS 4.0.9D output attached.

[2] Total wellsite oil throughput divided by the number of storage tanks used to calculate emissions.

Note: HAP emissions determined by multiplying by ratio of each HAP to VOCs calculated on the "Flash Gas Tank Emissions Summary Detail Sheet"

## Crescent Point Energy U.S. Corp
## Horseshoe Bend Fed 15-29-6-21E
**Total Tank Emissions Detail Sheet**

| | | | | |
|---|---|---|---|---|
| Source ID Number | TK1 - TK3 | Potential operation | 8,760 | hr/yr |
| Tank Usage | Crude Oil Storage | Recent Production | 750.0 | bpd |
| | | Annual throughput | 273,750.0 | bbl/yr |
| | | | 11,497,500 | gal/yr |

**Potential Emissions - Flashing, Storage, Working, and Breathing**

| Pollutant | Hrs of Operation (hrs/yr) | Estimated Total Losses (lb/hr) | (tpy) | (lb/yr) | Source of Emission Factor |
|---|---|---|---|---|---|
| VOC | 8,760 | 21.25 | 93.09 | 186,182.54 | Flash Gas Analysis; TANKS 4.0.9D |
| HAPs | 8,760 | 0.83 | 3.64 | 7,287.12 | Flash Gas Analysis; TANKS 4.0.9D |
| Benzene | 8,760 | 0.0407 | 0.18 | 356.90 | Flash Gas Analysis; TANKS 4.0.9D |
| Toluene | 8,760 | 0.0356 | 0.16 | 311.69 | Flash Gas Analysis; TANKS 4.0.9D |
| Ethlybenzene | 8,760 | 0.0024 | 0.01 | 20.99 | Flash Gas Analysis; TANKS 4.0.9D |
| Xylene | 8,760 | 0.0106 | 0.05 | 93.28 | Flash Gas Analysis; TANKS 4.0.9D |
| N-Hexane | 8,760 | 0.7425 | 3.25 | 6,504.26 | Flash Gas Analysis; TANKS 4.0.9D |
| Methane | 8,760 | 3.6217 | 15.86 | 31,725.65 | Flash Gas Analysis; TANKS 4.0.9D |
| Carbon dioxide | 8,760 | 0.1939 | 0.85 | 1,698.99 | Flash Gas Analysis; TANKS 4.0.9D |
| Nitrous oxide | 8,760 | 0.0000 | 0.00 | 0.00 | Flash Gas Analysis; TANKS 4.0.9D |

**Emissions Controlled (by flare with 95% control efficiency)**

| Pollutant | Hrs of Operation (hrs/yr) | Estimated Flash/Working/Breathing Losses (lb/hr) | (tpy) | (lb/yr) | Source of Emission Factor |
|---|---|---|---|---|---|
| VOC | 8,760 | 1.06 | 4.655 | 9309.1 | Lab Measurement & TANKS 4.0.9D |
| HAPs | 8,760 | 0.04 | 0.182 | 364.4 | Lab Measurement & TANKS 4.0.9D |

**Crescent Point Energy U.S. Corp**
**Horseshoe Bend Fed 15-29-6-21E**
**Combustor Detail Sheet - Storage Tanks**

| | | | | |
|---|---|---|---|---|
| Source Description: | **COMBUSTOR(S)** | Max. Oil Production | 750 | bbl/day |
| | | Hydrocarbon Oil Tank Vapors Recovered and Sent to Combustor | 6.78 | Mscf/day |
| Maximum Combustor Rating: | 23.4 MMBtu/hr | | | |
| | | Maximum Combustor Rating | 23.40 | MMBtu/hr |
| | | Maximum Combustor Potential Fuel Usage: | 79.57 | MMscf/yr |
| | | Maximum Daily Oil Flash Gas Production | 0.0068 | MMscf/day |
| | | Potential Fuel Usage (Oil Flash Gas) | 2.47 | MMscf/yr |
| Sale Gas Fuel Heating Value: | 1,153 Btu/scf | | | |
| Flashed Gas Fuel Heating Value: | 2,193 Btu/scf | Control Efficiency | 95.00% | |
| Pilot Light Heat Input Rating: | 0.07 MMBtu/hr | Pilot Gas Usage | 0.29 | MMscf/yr |
| | | Total Potential Fuel Usage | 2.76 | MMscf/yr |

**Potential Emissions from Oil Flash Gas Flared Daily**

| Pollutant | Emission Factor lb/MMBtu | Hrs of Operation (hrs/yr) | Estimated Emissions (lb/hr) | (tpy) | (lb/yr) | Source of Emission Factors |
|---|---|---|---|---|---|---|
| TOC | 0.14 | 8,760 | 0.087 | 0.38 | 759.11 | AP-42 Table 13.5-1 |
| NOx | 0.068 | 8,760 | 0.042 | 0.18 | 368.71 | AP-42 Table 13.5-1 |
| CO | 0.31 | 8,760 | 0.192 | 0.84 | 1680.88 | AP-42 Table 13.5-2 |

**Potential Emissions from Flare Pilot Light**

| Pollutant | Emission Factor lb/MMBtu | Hrs of Operation (hrs/yr) | Estimated Emissions (lb/hr) | (tpy) | (lb/yr) | Source of Emission Factors |
|---|---|---|---|---|---|---|
| TOC | 0.14 | 8,760 | 0.005 | 0.02 | 46.83 | AP-42 Table 13.5-1 |
| NOx | 0.068 | 8,760 | 0.003 | 0.01 | 22.74 | AP-42 Table 13.5-1 |
| CO | 0.31 | 8,760 | 0.012 | 0.05 | 103.69 | AP-42 Table 13.5-2 |

Note: The actual make and model of the combustor(s) is dependent upon actual production and corresponding emissions, as per NSPS Supart OOOOa. The make and model depicted represents the anticipated maximum MMBtu/hr rating.

**Crescent Point Energy U.S. Corp**
**Horseshoe Bend Fed 15-29-6-21E**
**Loadout Emissions Detail Sheet**

| | | | | |
|---|---|---|---|---|
| Source ID Number | OL | Potential operation | 2105.8 | hr/yr |
| Source Description | Truck Loading | Max. Daily rate of bbl | 750.0 | bbl |
| Source Usage | Oil Loadout | | | |

*Potential Emissions*

| | | | | |
|---|---|---|---|---|
| | 5.84 | tpy VOC | 31.97 | lb/day VOC |

*Estimated Fugitive Emissions* (See AP-42 Section 5.2)

| | | | |
|---|---|---|---|
| Molecular Weight of Vapors, MW | 39.12 | lb/lb-mol | From facility oil sample analysis |
| True Vapor Pressure, Pva @ T | 2.10 | psia | at T=145 for RVP 0.19 |
| Crude Oil Temperature | 145 | F | Heated temperature of storage tanks |
| | 605 | R | |
| Saturation Factor | 0.6 | | Dedicated service, submerged loading. AP-42, Table 5.2-1. |
| Annual throughput, v | 11,498 | 1000 gallons of Condensed Hydrocarbon Liquid | |
| Loading losses, L @ tank | 1.02 | lb/1000 gallons | Emission Factor and equation from AP-42, Chapter 5.2. |
| L = 12.46 S P MW / T (1-eff) | | | |
| Annual losses @ tank, L*v | 11,670.74 | lb/yr | |
| Loading Rate | 5,460 | gallons/hr | One 130-bbl truck loaded in one hour. |
| Annual Hrs of Operation | 2105.8 | hr/yr | |
| Hourly VOC During Loading | **5.54** | **lb/hr** | |
| Annual VOC tpy during loading | **5.84** | **tons/yr** | |
| | | | Ratio of HAPs to VOC Emissions |
| Annual HAPs tpy during loading | 0.228 | tons/yr | 3.9140% |
| Annual Benzene tpy during loading | 0.011 | tons/yr | 0.1917% |
| Annual Toluene tpy during loading | 0.010 | tons/yr | 0.1674% |
| Annual Ethylbenzene tpy during loading | 0.001 | tons/yr | 0.0113% |
| Annual Xylene tpy during loading | 0.003 | tons/yr | 0.0501% |
| Annual n-Hexane tpy during loading | 0.204 | tons/yr | 3.4935% |
| Annual Methane (CH4) tpy during loading | 0.994 | tons/yr | 17.0401% |
| Annual Carbon Dioxide ($CO_2$) tpy during loading | 0.053 | tons/yr | 0.9125% |

**Crescent Point Energy U.S. Corp**
**Horseshoe Bend Fed 15-29-6-21E**
**Natural Gas Burner Detail Sheet**

| | | | | |
|---|---|---|---|---|
| Equipment ID | HT-1 | | | |
| Source Description | Heater Treater(s) | Potential operation | 8760 | hr/yr |
| Equipment Usage | Total of 1.25 MMBtu/hr | Potential fuel usage | 9 | MMscf/yr |
| | | | 1,084 | scf/hr |
| Fuel Type | Field Gas | 1 Metric Ton | 2204.62 | pounds |
| Net Fuel Heating Value | 1,153 Btu/scf | 1 Kilogram | 2.20462 | pounds |
| | | Fuel Heating Value-Producing | 1153.4 | Btu/scf |
| Heat Input | 1.25 MMBtu/hr | Exit Temperature | 400 | deg F |
| Permit Status | | Volume Flow Rate | 180 | $ft^3$/min |
| Burner Efficiency | 80 % | | | |

***Potential Emissions***

| Pollutant | Emission Factor (lb/MMscf) | Nominal Rating (MMBtu/hr) | Hrs of Operation (hrs/yr) | Estimated Emissions (lb/hr) | Estimated Emissions (tpy) | Source of Emission Factor |
|---|---|---|---|---|---|---|
| NOx | 100.00 | 1.25 | 8,760 | 0.14 | 0.59 | AP-42 Table 1.4-1 |
| CO | 84.00 | 1.25 | 8,760 | 0.11 | 0.50 | AP-42 Table 1.4-1 |
| TOC | 11.00 | 1.25 | 8,760 | 0.01 | 0.07 | AP-42 Table 1.4-2 |
| VOC | 5.50 | 1.25 | 8,760 | 0.01 | 0.03 | AP-42 Table 1.4-2 |
| $SO_2$ | 0.00 | 1.25 | 8,760 | 0.00 | 0.00 | Gas Analysis |
| $PM/PM_{10}/PM_{2.5}$ | 7.60 | 1.25 | 8,760 | 0.01 | 0.05 | AP-42 Table 1.4-2 |
| HAPs | NA | 1.25 | 8,760 | 0.00 | 0.01 | Summary of HAPs |
| Benzene | 2.10E-03 | 1.25 | 8,760 | 0.00 | 0.00 | AP-42 Table 1.4-3 |
| Toluene | 3.40E-03 | 1.25 | 8,760 | 0.00 | 0.00 | AP-42 Table 1.4-3 |
| n-Hexane | 1.80E+00 | 1.25 | 8,760 | 0.00 | 0.01 | AP-42 Table 1.4-3 |
| Formaldehyde | 7.50E-02 | 1.25 | 8,760 | 0.00 | 0.00 | AP-42 Table 1.4-3 |

| Pollutant | Emission Factor (kg $CO_2$/MMBtu | Nominal Rating (MMBtu/hr) | Hrs of Operation (hrs/yr) | Estimated Emissions (lb/hr) | Estimated Emissions metric tons per year (MTPY) | Source of Emission Factor |
|---|---|---|---|---|---|---|
| $CH_4$ | 1.00E-03 | 1.25 | 8,760 | 0.00 | 0.01 | Title 40, Part 98, Subpart C, Table C-2 |
| $CO_2$ | 53.06 | 1.25 | 8,760 | 146.22 | 581.01 | Title 40, Part 98, Subpart C, Table C-1 |
| $N_2O$ | 1.00E-04 | 1.25 | 8,760 | 0.00 | 0.00 | Title 40, Part 98, Subpart C, Table C-2 |

Natural gas burner emissions for criteria pollutants can be estimated using the following equation:

$$E_X = \frac{EF_X \times BR \times 10^6 \times HO}{\frac{B_{EFF}}{100} \times HV_{Avg} \times 10^6 \times 2000} \times \frac{HV_{Prod}}{HV_{Avg}} \times \left( \frac{(100 - DRE)}{100} \right)$$

where:
EX = emissions for pollutant X (tpy);
EFX = emission factor for pollutant X (lb/MMscf);
BR = burner rating (MMBtu/hr);
BEff = burner efficiency (%);
HO = annual hours of operation (hr/yr);
HVAvg = average gas heating value (Btu/scf);
HVProd = produced gas heating value (Btu/scf);
DRE = destruction and removal efficiency (%);
1-ton = 2000-lb;
1-MMBtu = 106-Btu; and
1-MMscf = 106-scf.

Natural gas burner emissions for GHG pollutants can be estimated using the following equation:

$$CO2 = 1 \times 10^{-3} \times \text{Fuel Consumption} \times \text{Heating Value} \times \text{Emission Factor}$$

where:
CO2 = Annual CO2 mass emissions for natural gas combustion
Fuel Consumption = Annual fuel consumption in MMscf per year.
Heating Value = Heating value of natural gas in Btu per scf.
Emission Factor = in kilograms (kg) CO2 per MMBtu.

**Crescent Point Energy U.S. Corp**
**Horseshoe Bend Fed 15-29-6-21E**
**Natural Gas Burners Detail Sheet**

| | | | | |
|---|---|---|---|---|
| Equipment ID | HEATERS | | | |
| Source Description | Tank Heaters | Potential operation | 8,760 | |
| Equipment Usage | Total of 3 MMBtu/hr | Potential fuel usage | 23 | MMscf/yr |
| | | | 2,601 | scf/hr |
| Fuel Type | Field Gas | 1 Metric Ton | 2,205 | pounds |
| Net Fuel Heating Value | 1,153 Btu/scf | 1 Kilogram | 2 | pounds |
| | | Fuel Heating Value-Producing | 1,153 | Btu/scf |
| Heat Input | 3.000 MMBtu/hr | Exit Temperature | 400 | deg F |
| | | Volume Flow Rate | 180 | $ft^3$/min |
| Burner Efficiency | 80 % | Destruction Efficiency | | |

***Potential Emissions***

| Pollutant | Emission Factor (lb/MMscf) | Nominal Rating (MMBtu/hr) | Hrs of Operation (hrs/yr) | Estimated Emissions (lb/hr) | Estimated Emissions (tpy) | Source of Emission Factor |
|---|---|---|---|---|---|---|
| NOx | 100.00 | 3.00 | 8,760 | 0.33 | 1.42 | AP-42 Table 1.4-1 |
| CO | 84.00 | 3.00 | 8,760 | 0.27 | 1.20 | AP-42 Table 1.4-1 |
| TOC | 11.00 | 3.00 | 8,760 | 0.04 | 0.16 | AP-42 Table 1.4-2 |
| VOC | 5.50 | 3.00 | 8,760 | 0.02 | 0.08 | AP-42 Table 1.4-2 |
| $SO_2$ | 0.00 | 3.00 | 8,760 | 0.00 | 0.00 | Gas Analysis |
| $PM/PM_{10}/PM_{2.5}$ | 7.60 | 3.00 | 8,760 | 0.02 | 0.11 | AP-42 Table 1.4-2 |
| HAPs | NA | 3.00 | 8,760 | 0.01 | 0.03 | Summary of HAPs |
| Benzene | 2.10E-03 | 3.00 | 8,760 | 0.00 | 0.00 | AP-42 Table 1.4-3 |
| Toluene | 3.40E-03 | 3.00 | 8,760 | 0.00 | 0.00 | AP-42 Table 1.4-3 |
| n-Hexane | 1.80E+00 | 3.00 | 8,760 | 0.01 | 0.03 | AP-42 Table 1.4-3 |
| Formaldehyde | 7.50E-02 | 3.00 | 8,760 | 0.00 | 0.00 | AP-42 Table 1.4-3 |

| Pollutant | Emission Factor (kg $CO_2$/MMBtu | Nominal Rating (MMBtu/hr) | Hrs of Operation (hrs/yr) | Estimated Emissions (lb/hr) | Estimated Emissions metric tons per year (MTPY) | Source of Emission Factor |
|---|---|---|---|---|---|---|
| $CH_4$ | 1.00E-03 | 3.00 | 8,760 | 0.01 | 0.03 | Title 40, Part 98, Subpart C, Table C-2 |
| $CO_2$ | 53.06 | 3.00 | 8,760 | 350.93 | 1,394.42 | Title 40, Part 98, Subpart C, Table C-1 |
| $N_2O$ | 1.00E-04 | 3.00 | 8,760 | 0.00 | 0.00 | Title 40, Part 98, Subpart C, Table C-2 |

Natural gas burner emissions for criteria pollutants can be estimated using the following equation:

$$E_X = \frac{EF_X \times BR \times 10^6 \times HO}{\frac{B_{EFF}}{100} \times HV_{Avg} \times 10^6 \times 2000} \times \frac{HV_{Prod}}{HV_{Avg}} \times \left( \frac{(100 - DRE)}{100} \right)$$

where:
EX = emissions for pollutant X (tpy);
EFX = emission factor for pollutant X (lb/MMscf);
BR = burner rating (MMBtu/hr);
BEff = burner efficiency (%);
HO = annual hours of operation (hr/yr);
HVAvg = average gas heating value (Btu/scf);
HVProd = produced gas heating value (Btu/scf);
DRE = destruction and removal efficiency (%);
1-ton = 2000-lb;
1-MMBtu = 106-Btu; and
1-MMscf = 106-scf.

Natural gas burner emissions for GHG pollutants can be estimated using the following equation:

$$CO2 = 1 \times 10^{-3} \times \text{Fuel Consumption} \times \text{Heating Value} \times \text{Emission Factor}$$

where:
CO2 = Annual CO2 mass emissions for natural gas combustion
Fuel Consumption = Annual fuel consumption in MMscf per year.
Heating Value = Heating value of natural gas in Btu per scf.
Emission Factor = in kilograms (kg) CO2 per MMBtu.

**Crescent Point Energy U.S. Corp**
**Horseshoe Bend Fed 15-29-6-21E - Engine 1 (E-1)**

## Pumpjack Engine Detail Sheet - Uncontrolled

| | | | |
|---|---|---|---|
| **Engine Build Year:** | Post 1/1/2011 | **Rebuild Year:** | Not applicable |
| **Engine Make & Model:** | Doosan D14.6L | **Engine Type:** | 4-Stroke Rich Burn |
| **Total Horsepower:** | 449 | **Heat Rating:** | 3.209 MMBtu/hr |

### Given

| | | | |
|---|---|---|---|
| Fuel Usage | 66.77 | MCFD | |
| Fuel Usage | 24.37 | MMCF/YR | |
| NOx Emission Factor | 1.00 | g/hp-hr | *40 CFR Part 60, Subpart JJJJ* |
| CO Emission Factor | 2.00 | g/hp-hr | *40 CFR Part 60, Subpart JJJJ* |
| Total PM Emission Factor | 9.91E-03 | lb/MMBtu | *AP-42 - Table 3.2-3 - 4-stroke rich-burn engines* |
| Total $PM_{10}/PM_{2.5}$ Emission Factor | 9.50E-03 | lb/MMBtu | *AP-42 - Table 3.2-3 - 4-stroke rich-burn engines* |
| VOC Emission Factor | 3.58E-01 | lb/MMBtu | *AP-42 - Table 3.2-3 - 4-stroke rich-burn engines* |
| Sulfur Emission Factor | 0 | lb/MMBtu | *No hydrogen sulfide indicated in gas analysis.* |
| Formaldehyde Emission Factor | 2.05E-02 | lb/MMBtu | *AP-42 - Table 3.2-3 - 4-stroke rich-burn engines* |
| Acetaldehyde Emission Factor | 2.79E-03 | lb/MMBtu | *AP-42 - Table 3.2-3 - 4-stroke rich-burn engines* |
| Acrolein Emission Factor | 2.63E-03 | lb/MMBtu | *AP-42 - Table 3.2-3 - 4-stroke rich-burn engines* |
| Benzene Emission Factor | 1.58E-03 | lb/MMBtu | *AP-42 - Table 3.2-3 - 4-stroke rich-burn engines* |
| Methanol Emission Factor | 3.06E-03 | lb/MMBtu | *AP-42 - Table 3.2-3 - 4-stroke rich-burn engines* |
| Methane ($CH_4$) Emission Factor | 1.00E-03 | kg $CO_2$/MMBtu | *40 CFR Part 98, Subpart C, Table C-2* |
| Carbon Dioxide ($CO_2$) Emission Factor | 53.06 | kg $CO_2$/MMBtu | *40 CFR Part 98, Subpart C, Table C-1* |
| Nitrous Oxide ($N_2O$) Emission Factor | 1.00E-04 | kg $CO_2$/MMBtu | *40 CFR Part 98, Subpart C, Table C-2* |
| Engine Rating | 449 | hp | |
| % runtime in field | 100% | | |
| Produced Gas Heating Value (HHV) | 1153 | Btu/scf | |
| Fuel Consumption Rate (Btu/hp-hr) | 7,146 | Btu/hp-hr | |
| Conversion Factor | 2204.62 | lb/metric ton | |
| Conversion Factor | 1.10231 | metric ton/std. ton | |
| Conversion Factor | 0.90718 | std. ton/metric ton | |
| Conversion Factor | 24 | hr/day | |
| Conversion Factor | 1000000 | Btu/MMBtu | |
| Conversion Factor | 8760 | hr/yr | |
| Conversion Factor | 2000 | lb/std. ton | |
| Conversion Factor | 454 | g/lb | |

### Calculations

| | Emissions (Uncontrolled) | |
|---|---|---|
| Pollutant | lb/hr | tons/year |
| NOx | 0.99 | 4.33 |
| CO | 1.98 | 8.66 |
| VOC | 1.15 | 5.03 |
| PM | 3.18E-02 | 1.39E-01 |
| $PM_{10}$ | 3.05E-02 | 1.34E-01 |
| $PM_{2.5}$ | 3.05E-02 | 1.34E-01 |
| $SO_2$ | 0.00E+00 | 0.00E+00 |
| HAPs | 9.81E-02 | 4.30E-01 |
| Formaldehyde | 6.58E-02 | 2.88E-01 |
| Acetaldehyde | 8.95E-03 | 3.92E-02 |
| Acrolein | 8.44E-03 | 3.70E-02 |
| Benzene | 5.07E-03 | 2.22E-02 |
| Methanol | 9.82E-03 | 4.30E-02 |
| | lb/hr | metric tons/year |
| $CH_4$ | 0.007 | 0.028 |
| $CO_2$ | 375.35 | 1491.45 |
| $N_2O$ | 0.00 | 0.00 |

### Equations

*Pollutant Emission Rate = Emission Factor x Engine Rating x Conversion Factor*

*PM/PM10/PM2.5 Emission Rate = Emission Factor x Fuel Usage x Fuel Heating Value x Conversion Factors*

**Crescent Point Energy U.S. Corp**
**Horseshoe Bend Fed 15-29-6-21E - Engine 1 (E-1)**

## Pumpjack Engine Detail Sheet - Controlled

| | | | |
|---|---|---|---|
| **Engine Build Year:** | Post 1/1/2011 | **Rebuild Year:** | Not applicable |
| **Engine Make & Model:** | Doosan D14.6L | **Engine Type:** | 4-Stroke Rich Burn |
| **Total Horsepower:** | 449 | **Heat Rating:** | 3.209 MMBtu/hr |

**Given**

| | | | |
|---|---|---|---|
| Fuel Usage | 66.77 | MCFD | |
| Fuel Usage | 24.37 | MMCF/YR | |
| NOx Emission Factor | 1.00 | g/hp-hr | *40 CFR Part 60, Subpart JJJJ* |
| CO Emission Factor | 2.00 | g/hp-hr | *40 CFR Part 60, Subpart JJJJ* |
| Total PM Emission Factor | 9.91E-03 | lb/MMBtu | *AP-42 - Table 3.2-3 - 4-stroke rich-burn engines* |
| Total $PM_{10}/PM_{2.5}$ Emission Factor | 9.50E-03 | lb/MMBtu | *AP-42 - Table 3.2-3 - 4-stroke rich-burn engines* |
| VOC Emission Factor | 7.00E-01 | g/hp-hr | *40 CFR Part 60, Subpart JJJJ* |
| Sulfur Emission Factor | 0 | lb/MMBtu | *No hydrogen sulfide indicated in gas analysis.* |
| Formaldehyde Emission Factor | 1.03E-02 | lb/MMBtu | *Catalyst Spec & AP-42 - Table 3.2-3 - 4-stroke rich-burn engines* |
| Acetaldehyde Emission Factor | 1.40E-03 | lb/MMBtu | *Catalyst Spec & AP-42 - Table 3.2-3 - 4-stroke rich-burn engines* |
| Acrolein Emission Factor | 1.32E-03 | lb/MMBtu | *Catalyst Spec & AP-42 - Table 3.2-3 - 4-stroke rich-burn engines* |
| Benzene Emission Factor | 7.90E-04 | lb/MMBtu | *Catalyst Spec & AP-42 - Table 3.2-3 - 4-stroke rich-burn engines* |
| Methanol Emission Factor | 1.53E-03 | lb/MMBtu | *Catalyst Spec & AP-42 - Table 3.2-3 - 4-stroke rich-burn engines* |
| Methane ($CH_4$) Emission Factor | 1.00E-03 | kg $CO_2$/MMBtu | *40 CFR Part 98, Subpart C, Table C-2* |
| Carbon Dioxide ($CO_2$) Emission Factor | 53.06 | kg $CO_2$/MMBtu | *40 CFR Part 98, Subpart C, Table C-1* |
| Nitrous Oxide ($N_2O$) Emission Factor | 1.00E-04 | kg $CO_2$/MMBtu | *40 CFR Part 98, Subpart C, Table C-2* |
| Engine Rating | 449 | hp | |
| % runtime in field | 100% | | |
| Produced Gas Heating Value (HHV) | 1153 | Btu/scf | |
| Fuel Consumption Rate (Btu/hp-hr) | 7,146 | Btu/hp-hr | |
| Conversion Factor | 2204.62 | lb/metric ton | |
| Conversion Factor | 1.10231 | metric ton/std. ton | |
| Conversion Factor | 0.90718 | std. ton/metric ton | |
| Conversion Factor | 24 | hr/day | |
| Conversion Factor | 1000000 | Btu/MMBtu | |
| Conversion Factor | 8760 | hr/yr | |
| Conversion Factor | 2000 | lb/std. ton | |
| Conversion Factor | 454 | g/lb | |

**Calculations**

| | Emissions (Controlled) | |
|---|---|---|
| Pollutant | lb/hr | tons/year |
| NOx | 0.99 | 4.33 |
| CO | 1.98 | 8.66 |
| VOC | 6.92E-01 | 3.03E+00 |
| PM | 3.18E-02 | 1.39E-01 |
| $PM_{10}$ | 3.05E-02 | 1.34E-01 |
| $PM_{2.5}$ | 3.05E-02 | 1.34E-01 |
| $SO_2$ | 0.00E+00 | 0.00E+00 |
| HAPs | 4.90E-02 | 2.15E-01 |
| Formaldehyde | 3.29E-02 | 1.44E-01 |
| Acetaldehyde | 4.48E-03 | 1.96E-02 |
| Acrolein | 4.22E-03 | 1.85E-02 |
| Benzene | 2.53E-03 | 1.11E-02 |
| Methanol | 4.91E-03 | 2.15E-02 |
| | lb/hr | metric tons/year |
| $CH_4$ | 0.01 | 0.03 |
| $CO_2$ | 375.35 | 1491.45 |
| $N_2O$ | 0.00 | 0.00 |

**Equations**

*Pollutant Emission Rate = Emission Factor x Engine Rating x Conversion Factor*

*PM/PM10/PM2.5 Emission Rate = Emission Factor x Fuel Usage x Fuel Heating Value x Conversion Factors*

**Crescent Point Energy U.S. Corp**
**Horseshoe Bend Fed 15-29-6-21E**
**Fugitive VOC Detail Sheet**

| | | | |
|---|---|---|---|
| Source ID Number | FUG | Source Location Zone | 12 |
| Source Description | Piping Fugitives<br>Equipment Piping | Potential operation | 8,760 hr/yr |

*Potential Emissions*

| Equipment Type | TOC Emission Factor (lb/hr/source) | Source Count | Hours of Operation | Control Factor (Percent) | Total HC Emission Rate (lb/hr) | Total HC Emission Rate (tpy) | Percent VOC | Total VOC Emission Rate (lb/hr) | Total VOC Emission Rate (tpy) |
|---|---|---|---|---|---|---|---|---|---|
| Valves-Gas/Vapor | 0.009920 | 7 | 8,760 | 0.00% | 0.07 | 0.30 | 10.64% | 0.01 | 0.03 |
| Valves-Light Oil | 0.005510 | 10 | 8,760 | 0.00% | 0.06 | 0.24 | 100.00% | 0.06 | 0.24 |
| Valves-Heavy Oil | 0.000019 | 0 | 8,760 | 0.00% | 0.00 | 0.00 | | 0.00 | 0.00 |
| Valves-Water | 0.000216 | 10 | 8,760 | 0.00% | 0.00 | 0.01 | 50.00% | 0.00 | 0.00 |
| Relief Valves | 0.019400 | 0 | 8,760 | 0.00% | 0.00 | 0.00 | 10.64% | 0.00 | 0.00 |
| Pump Seals-Gas/Vapor | 0.019400 | 3 | 8,760 | 0.00% | 0.06 | 0.25 | 10.64% | 0.01 | 0.03 |
| Pump Seals-Light Oil | 0.028700 | 0 | 8,760 | 0.00% | 0.00 | 0.00 | 100.00% | 0.00 | 0.00 |
| Pump Seals-Heavy Oil | 0.000071 | 0 | 8,760 | 0.00% | 0.00 | 0.00 | | 0.00 | 0.00 |
| Sample Connections | 0.019400 | 0 | 8,760 | 0.00% | 0.00 | 0.00 | 100.00% | 0.00 | 0.00 |
| Open-Ended Lines | 0.004410 | 0 | 8,760 | 0.00% | 0.00 | 0.00 | | 0.00 | 0.00 |
| Other - Hatch, Gas/Vapor | 0.019467 | 2 | 8,760 | 0.00% | 0.04 | 0.17 | 10.64% | 0.00 | 0.02 |
| Other - Hatch, Light Oil | 0.016535 | 2 | 8,760 | 0.00% | 0.03 | 0.14 | 100.00% | 0.03 | 0.14 |
| Other - Hatch, Heavy Oil | 0.000071 | 0 | 8,760 | 0.00% | 0.00 | 0.00 | | 0.00 | 0.00 |
| Other - Hatch, Water | 0.030865 | 2 | 8,760 | 0.00% | 0.06 | 0.27 | 50.00% | 0.03 | 0.14 |
| Connectors - Gas/Vapors | 0.000440 | 10 | 8,760 | 0.00% | 0.00 | 0.02 | 10.64% | 0.00 | 0.00 |
| Connectors - Light Oil | 0.000463 | 15 | 8,760 | 0.00% | 0.01 | 0.03 | 100.00% | 0.01 | 0.03 |
| Connectors - Heavy Oil | 0.000017 | 0 | 8,760 | 0.00% | 0.00 | 0.00 | | 0.00 | 0.00 |
| Connectors - Water | 0.000243 | 15 | 8,760 | 0.00% | 0.00 | 0.02 | 50.00% | 0.00 | 0.01 |
| Flanges-Gas/Vapor | 0.000860 | 11 | 8,760 | 0.00% | 0.01 | 0.04 | 10.64% | 0.00 | 0.00 |
| Flanges-Heavy Oil | 0.000001 | 0 | 8,760 | 0.00% | 0.00 | 0.00 | | 0.00 | 0.00 |
| Flanges-Light Oil | 0.000243 | 16 | 8,760 | 0.00% | 0.00 | 0.02 | 100.00% | 0.00 | 0.02 |
| Flanges-Water | 0.000006 | 16 | 8,760 | 0.00% | 0.00 | 0.00 | 50.00% | 0.00 | 0.00 |
| **Totals** | | **119** | | | **0.35** | **1.52** | | **0.15** | **0.67** |

Oil and gas production operations equipment leak emission factors (from OAQPS TTN BBS)
Source counts estimated from 40 CFR Part 98, Subpart W, Table W-1C and are not site-specific.

VOC and HAP fugitive emissions can be estimated using the following equation:

$$E_X = \frac{[(EF_{C1} \times \#_{C1}) + (EF_{C2} \times \#_{C2}) + ...(EF_{Cn} \times \#_{Cn})] \times 8760}{2000} \times WF_X$$

where:
EX = emissions for pollutant X (tpy);
EFC1, EFC2 …EFCn = emission factor for component C1, C2, …Cn (lb/hr/component);
#C1, #C2 …#Cn = number of C1, C2, …Cn components;
WFX = weight fraction of pollutant X (wt W/wt TOC);
1-year = 8760-hr; and
1-ton = 2000-lb.

**Crescent Point Energy U.S. Corp**
**Horseshoe Bend Fed 15-29-6-21E**
**Fugitive HAP Detail Sheet**

| | | | |
|---|---|---|---|
| Source ID Number | FUG | | |
| Source Description | Piping Fugitives | Potential operation | 8,760 hr/yr |

*Potential Emissions*

| Equipment Type | Total Emission Rate (lb/hr) | Total Emission Rate (tpy) |
|---|---|---|
| All-Gas/Vapor | 0.02 | 0.08 |
| All-Light Liquids | 0.10 | 0.43 |
| All-Heavy Oil | 0.00 | 0.00 |
| All-Water | 0.03 | 0.15 |
| **Total VOC Emissions** | **0.15** | **0.67** |
| **TOC Emissions** | **0.35** | **1.52** |

*Potential Emissions*

| Equipment Type | Emission Factor Gas | Emission Factor Light Oil | Total Emission Rate (lb/hr) | Total Emission Rate (tpy) |
|---|---|---|---|---|
| | Weight Percent (%wt) | | | |
| Benzene | 0.023% | 0.1383% | 0.000 | 0.00108 |
| Toluene | 0.026% | 0.121% | 0.000 | 0.00098 |
| Ethylbenzene | 0.003% | 0.008% | 0.000 | 0.00007 |
| Xylene | 0.013% | 0.036% | 0.000 | 0.00033 |
| N-Hexane | 0.400% | 2.521% | 0.004 | 0.01945 |
| Methane ($CH_4$) | 58.680% | 12.420% | 0.247 | 1.08082 |
| Carbon dioxide ($CO_2$) | 0.956% | 0.665% | 0.000 | 0.00000 |
| Nitrous oxide ($N_2O$) | n/a | n/a | n/a | n/a |
| **HAP Totals** | **0.47%** | **2.82%** | **0.005** | **0.022** |

**Crescent Point Energy U.S. Corp**
**Horseshoe Bend Fed 15-29-6-21E**

## Narrative Description

Hydrocarbons from a single heavy crude oil well is collected at the Horseshoe Bend Fed 15-29-6-21E production facility. The hydrocarbon extraction from the wells is assisted by an artificial lift driven by a generator and the hydrocarbons are routed to a heater treater. The heater treater separate the hydrocarbon into three production streams: gas, oil, and water. The produced gas is routed to a gas sales line. The crude oil is routed to three 1,000-bbl crude oil storage tanks and the produced water is routed to one 1,000-bbl produced water storage tanks. Each of the crude oil storage tanks and the produced water tanks are heated by tank heaters. The crude oil and produced water is transported offsite using haul trucks. Methanol and glycol storage occurs on site in small storage tanks. Fugitive emissions also occur from component leaks.

Produced gas from the field is collected and dried at a compressor station. Once the produced gas is dried at the compressor station, it is rerouted back into the field to power the pilot lights, engines, and heaters.

## Equipment list, including control devices, etc.

| Description | Unique ID |
|---|---|
| Crude Oil Storage Tanks - TK1 - TK3 | TK1 - TK3 |
| Produced Water Tank(s) | PWTK1 - PWTK1 |
| Heater/Treater(s) | HTTR(S) |
| Tank Heaters | TK HTR(S) |
| Oil Tank Truck Loading | OL |
| Combustor(s) | COMBUSTOR(S) |
| Fugitive Emissions | FUG |
| Methanol Tank - 55-gallon drum | MT |
| Glycol Tank - 55-gallon drum | GT |
| Engine 1 (E-1) | E-1 |

**Type of fuel and amount used**

| Fuel Usage | |
|---|---|
| Pilot Light(s) Usage: | 0.29 MMscf/year |
| Engine(s) Usage: | 24.37 MMscf/year |
| Heater(s) Usage: | 32.28 MMscf/year |

**Type Raw Materials Used**

Flash gas from all storage tanks routed to the flare.
Oil and produced water moved offsite via trucks.
Natural gas used in heaters, flared pilot light(s), and engines(s).

**Production Rate**

273,750 barrels per year of oil
91.25 MMscf/year gas production (used onsite or routed to sales gas line)

**Operating Schedule**

24 hours per day, 7 days per week, 52 weeks per year

# ATTACHMENT C

# TANKS 4.0.9D EMISSION CALCULATION RESULTS

# TANKS 4.0.9d
## Emissions Report - Detail Format
## Tank Indentification and Physical Characteristics

**Identification**

| | |
|---|---|
| User Identification: | Horseshoe Bend Fed 15-29-6-21E |
| City: | Vernal |
| State: | Utah |
| Company: | Crescent Point Energy U.S. Corp |
| Type of Tank: | Vertical Fixed Roof Tank |
| Description: | Three 1,000-bbl heavy crude oil storage tanks. 11,497,500 gallons total annual throughput. 3,832,500 gallons throughput per tank. |

**Tank Dimensions**

| | | |
|---|---|---|
| Shell Height (ft): | | 30.00 |
| Diameter (ft): | | 15.50 |
| Liquid Height (ft) : | | 29.76 |
| Avg. Liquid Height (ft): | | 15.00 |
| Volume (gallons): | | 42,000.00 |
| Turnovers: | | 91.25 |
| Net Throughput(gal/yr): | | 3,832,500.00 |
| Is Tank Heated (y/n): | Y | |

**Paint Characteristics**

| | |
|---|---|
| Shell Color/Shade: | Gray/Light |
| Shell Condition | Good |
| Roof Color/Shade: | Gray/Light |
| Roof Condition: | Good |

**Roof Characteristics**

| | | |
|---|---|---|
| Type: | Cone | |
| Height (ft) | | 0.10 |
| Slope (ft/ft) (Cone Roof) | | 0.01 |

**Breather Vent Settings**

| | |
|---|---|
| Vacuum Settings (psig): | 0.00 |
| Pressure Settings (psig) | 0.00 |

Meterological Data used in Emissions Calculations: Salt Lake City, Utah (Avg Atmospheric Pressure = 12.64 psia)

# TANKS 4.0.9d
## Emissions Report - Detail Format
## Liquid Contents of Storage Tank

**Horseshoe Bend Fed 15-29-6-21E - Vertical Fixed Roof Tank**
**Vernal, Utah**

| Mixture/Component | Month | Daily Liquid Surf. Temperature (deg F) Avg. | Min. | Max. | Liquid Bulk Temp (deg F) | Vapor Pressure (psia) Avg. | Min. | Max. | Vapor Mol. Weight. | Liquid Mass Fract. | Vapor Mass Fract. | Mol. Weight | Basis for Vapor Pressure Calculations |
|---|---|---|---|---|---|---|---|---|---|---|---|---|---|
| Heavy Crude Oil Category C | All | 145.00 | 145.00 | 145.00 | 145.00 | 0.3978 | 0.3978 | 0.3978 | 45.4000 | | | 600.00 | Option 4: RVP=.19 |

# TANKS 4.0.9d
# Emissions Report - Detail Format
# Detail Calculations (AP-42)

## Horseshoe Bend Fed 15-29-6-21E - Vertical Fixed Roof Tank
## Vernal, Utah

| Annual Emission Calcaulations | |
|---|---|
| Standing Losses (lb): | 0.0000 |
| Vapor Space Volume (cu ft): | 2,836.6684 |
| Vapor Density (lb/cu ft): | 0.0028 |
| Vapor Space Expansion Factor: | 0.0000 |
| Vented Vapor Saturation Factor: | 0.7593 |
| | |
| Tank Vapor Space Volume: | |
| Vapor Space Volume (cu ft): | 2,836.6684 |
| Tank Diameter (ft): | 15.5000 |
| Vapor Space Outage (ft): | 15.0333 |
| Tank Shell Height (ft): | 30.0000 |
| Average Liquid Height (ft): | 15.0000 |
| Roof Outage (ft): | 0.0333 |
| | |
| Roof Outage (Cone Roof) | |
| Roof Outage (ft): | 0.0333 |
| Roof Height (ft): | 0.1000 |
| Roof Slope (ft/ft): | 0.0100 |
| Shell Radius (ft): | 7.7500 |
| | |
| Vapor Density | |
| Vapor Density (lb/cu ft): | 0.0028 |
| Vapor Molecular Weight (lb/lb-mole): | 45.4000 |
| Vapor Pressure at Daily Average Liquid Surface Temperature (psia): | 0.3978 |
| Daily Avg. Liquid Surface Temp. (deg. R): | 604.6700 |
| Daily Average Ambient Temp. (deg. F): | 51.9625 |
| Ideal Gas Constant R (psia cuft / (lb-mol-deg R)): | 10.731 |
| Liquid Bulk Temperature (deg. R): | 604.6700 |
| Tank Paint Solar Absorptance (Shell): | 0.5400 |
| Tank Paint Solar Absorptance (Roof): | 0.5400 |
| Daily Total Solar Insulation Factor (Btu/sqft day): | 1,452.1184 |
| | |
| Vapor Space Expansion Factor | |
| Vapor Space Expansion Factor: | 0.0000 |
| Daily Vapor Temperature Range (deg. R): | 0.0000 |
| Daily Vapor Pressure Range (psia): | 0.0000 |
| Breather Vent Press. Setting Range(psia): | 0.0000 |
| Vapor Pressure at Daily Average Liquid Surface Temperature (psia): | 0.3978 |
| Vapor Pressure at Daily Minimum Liquid Surface Temperature (psia): | 0.3978 |
| Vapor Pressure at Daily Maximum Liquid Surface Temperature (psia): | 0.3978 |
| Daily Avg. Liquid Surface Temp. (deg R): | 604.6700 |
| Daily Min. Liquid Surface Temp. (deg R): | 604.6700 |
| Daily Max. Liquid Surface Temp. (deg R): | 604.6700 |
| Daily Ambient Temp. Range (deg. R): | 23.3583 |
| | |
| Vented Vapor Saturation Factor | |
| Vented Vapor Saturation Factor: | 0.7593 |
| Vapor Pressure at Daily Average Liquid: Surface Temperature (psia): | 0.3978 |
| Vapor Space Outage (ft): | 15.0333 |

| | |
|---|---|
| Working Losses (lb): | 612.4172 |
| Vapor Molecular Weight (lb/lb-mole): | 45.4000 |
| Vapor Pressure at Daily Average Liquid Surface Temperature (psia): | 0.3978 |
| Annual Net Throughput (gal/yr.): | 3,832,500.0000 |
| Annual Turnovers: | 91.2500 |
| Turnover Factor: | 0.4954 |
| Maximum Liquid Volume (gal): | 42,000.0000 |
| Maximum Liquid Height (ft): | 29.7552 |
| Tank Diameter (ft): | 15.5000 |
| Working Loss Product Factor: | 0.7500 |
| Total Losses (lb): | 612.4172 |

# TANKS 4.0.9d
## Emissions Report - Detail Format
## Individual Tank Emission Totals

### Emissions Report for: Annual

**Horseshoe Bend Fed 15-29-6-21E - Vertical Fixed Roof Tank**
**Vernal, Utah**

| | Losses(lbs) | | |
|---|---|---|---|
| Components | Working Loss | Breathing Loss | Total Emissions |
| Heavy Crude Oil Category C | 612.42 | 0.00 | 612.42 |

# TANKS 4.0.9d
## Emissions Report - Detail Format
## Tank Indentification and Physical Characteristics

**Identification**

| | |
|---|---|
| User Identification: | Crescent Point - Glycol tank |
| City: | Vernal |
| State: | Utah |
| Company: | Crescent Point |
| Type of Tank: | Horizontal Tank |
| Description: | 55-gal drum Used smallest dimensions possible. |

**Tank Dimensions**

| | | |
|---|---|---|
| Shell Length (ft): | | 5.00 |
| Diameter (ft): | | 3.00 |
| Volume (gallons): | | 265.00 |
| Turnovers: | | 1.00 |
| Net Throughput(gal/yr): | | 265.00 |
| Is Tank Heated (y/n): | N | |
| Is Tank Underground (y/n): | N | |

**Paint Characteristics**

| | |
|---|---|
| Shell Color/Shade: | Gray/Light |
| Shell Condition | Good |

**Breather Vent Settings**

| | |
|---|---|
| Vacuum Settings (psig): | -0.03 |
| Pressure Settings (psig) | 0.03 |

Meterological Data used in Emissions Calculations: Salt Lake City, Utah (Avg Atmospheric Pressure = 12.64 psia)

# TANKS 4.0.9d
## Emissions Report - Detail Format
## Liquid Contents of Storage Tank

**Crescent Point - Glycol tank - Horizontal Tank**
**Vernal, Utah**

| Mixture/Component | Month | Daily Liquid Surf. Temperature (deg F) Avg. | Min. | Max. | Liquid Bulk Temp (deg F) | Vapor Pressure (psia) Avg. | Min. | Max. | Vapor Mol. Weight. | Liquid Mass Fract. | Vapor Mass Fract. | Mol. Weight | Basis for Vapor Pressure Calculations |
|---|---|---|---|---|---|---|---|---|---|---|---|---|---|
| Propylene glycol | All | 59.41 | 49.72 | 69.11 | 54.20 | 0.0009 | 0.0005 | 0.0015 | 76.1100 | | | 76.11 | Option 2: A=8.2082, B=2085.9, C=203.54 |

# TANKS 4.0.9d
# Emissions Report - Detail Format
# Detail Calculations (AP-42)

## Crescent Point - Glycol tank - Horizontal Tank
## Vernal, Utah

Annual Emission Calcaulations

| | |
|---|---|
| Standing Losses (lb): | 0.0072 |
| Vapor Space Volume (cu ft): | 22.5114 |
| Vapor Density (lb/cu ft): | 0.0000 |
| Vapor Space Expansion Factor: | 0.0700 |
| Vented Vapor Saturation Factor: | 0.9999 |
| Tank Vapor Space Volume: | |
| Vapor Space Volume (cu ft): | 22.5114 |
| Tank Diameter (ft): | 3.0000 |
| Effective Diameter (ft): | 4.3713 |
| Vapor Space Outage (ft): | 1.5000 |
| Tank Shell Length (ft): | 5.0000 |
| Vapor Density | |
| Vapor Density (lb/cu ft): | 0.0000 |
| Vapor Molecular Weight (lb/lb-mole): | 76.1100 |
| Vapor Pressure at Daily Average Liquid Surface Temperature (psia): | 0.0009 |
| Daily Avg. Liquid Surface Temp. (deg. R): | 519.0816 |
| Daily Average Ambient Temp. (deg. F): | 51.9625 |
| Ideal Gas Constant R (psia cuft / (lb-mol-deg R)): | 10.731 |
| Liquid Bulk Temperature (deg. R): | 513.6725 |
| Tank Paint Solar Absorptance (Shell): | 0.5400 |
| Daily Total Solar Insulation Factor (Btu/sqft day): | 1,452.1184 |
| Vapor Space Expansion Factor | |
| Vapor Space Expansion Factor: | 0.0700 |
| Daily Vapor Temperature Range (deg. R): | 38.7740 |
| Daily Vapor Pressure Range (psia): | 0.0010 |
| Breather Vent Press. Setting Range(psia): | 0.0600 |
| Vapor Pressure at Daily Average Liquid Surface Temperature (psia): | 0.0009 |
| Vapor Pressure at Daily Minimum Liquid Surface Temperature (psia): | 0.0005 |
| Vapor Pressure at Daily Maximum Liquid Surface Temperature (psia): | 0.0015 |
| Daily Avg. Liquid Surface Temp. (deg R): | 519.0816 |
| Daily Min. Liquid Surface Temp. (deg R): | 509.3881 |
| Daily Max. Liquid Surface Temp. (deg R): | 528.7751 |
| Daily Ambient Temp. Range (deg. R): | 23.3583 |
| Vented Vapor Saturation Factor | |
| Vented Vapor Saturation Factor: | 0.9999 |
| Vapor Pressure at Daily Average Liquid: Surface Temperature (psia): | 0.0009 |
| Vapor Space Outage (ft): | 1.5000 |
| Working Losses (lb): | 0.0004 |
| Vapor Molecular Weight (lb/lb-mole): | 76.1100 |
| Vapor Pressure at Daily Average Liquid Surface Temperature (psia): | 0.0009 |
| Annual Net Throughput (gal/yr.): | 265.0000 |

| | |
|---|---|
| Annual Turnovers: | 1.0000 |
| Turnover Factor: | 1.0000 |
| Tank Diameter (ft): | 3.0000 |
| Working Loss Product Factor: | 1.0000 |

| | |
|---|---|
| Total Losses (lb): | 0.0076 |

# TANKS 4.0.9d
## Emissions Report - Detail Format
## Individual Tank Emission Totals

### Emissions Report for: Annual

**Crescent Point - Glycol tank - Horizontal Tank**
**Vernal, Utah**

| | Losses(lbs) | | |
|---|---|---|---|
| Components | Working Loss | Breathing Loss | Total Emissions |
| Propylene glycol | 0.00 | 0.01 | 0.01 |

# TANKS 4.0.9d
## Emissions Report - Detail Format
## Tank Indentification and Physical Characteristics

**Identification**

| | |
|---|---|
| User Identification: | Crescent Point - Methanol tank |
| City: | Vernal |
| State: | Utah |
| Company: | Crescent Point |
| Type of Tank: | Horizontal Tank |
| Description: | 55-gallon drum size methanol Used smallest dimensions possible. Horizontal tank |

**Tank Dimensions**

| | | |
|---|---|---|
| Shell Length (ft): | | 5.00 |
| Diameter (ft): | | 3.00 |
| Volume (gallons): | | 265.00 |
| Turnovers: | | 1.00 |
| Net Throughput(gal/yr): | | 265.00 |
| Is Tank Heated (y/n): | N | |
| Is Tank Underground (y/n): | N | |

**Paint Characteristics**

| | |
|---|---|
| Shell Color/Shade: | Gray/Light |
| Shell Condition | Good |

**Breather Vent Settings**

| | |
|---|---|
| Vacuum Settings (psig): | -0.03 |
| Pressure Settings (psig) | 0.03 |

Meterological Data used in Emissions Calculations: Salt Lake City, Utah (Avg Atmospheric Pressure = 12.64 psia)

# TANKS 4.0.9d
## Emissions Report - Detail Format
## Liquid Contents of Storage Tank

**Crescent Point - Methanol tank - Horizontal Tank**
**Vernal, Utah**

| Mixture/Component | Month | Daily Liquid Surf. Temperature (deg F) Avg. | Min. | Max. | Liquid Bulk Temp (deg F) | Vapor Pressure (psia) Avg. | Min. | Max. | Vapor Mol. Weight. | Liquid Mass Fract. | Vapor Mass Fract. | Mol. Weight | Basis for Vapor Pressure Calculations |
|---|---|---|---|---|---|---|---|---|---|---|---|---|---|
| Methyl alcohol | All | 59.41 | 49.72 | 69.11 | 54.20 | 1.4156 | 1.0351 | 1.9099 | 32.0400 | | | 32.04 | Option 2: A=7.897, B=1474.08, C=229.13 |

# TANKS 4.0.9d
# Emissions Report - Detail Format
# Detail Calculations (AP-42)

## Crescent Point - Methanol tank - Horizontal Tank
## Vernal, Utah

Annual Emission Calcaulations

| | |
|---|---|
| Standing Losses (lb): | 8.6559 |
| Vapor Space Volume (cu ft): | 22.5114 |
| Vapor Density (lb/cu ft): | 0.0081 |
| Vapor Space Expansion Factor: | 0.1473 |
| Vented Vapor Saturation Factor: | 0.8988 |
| Tank Vapor Space Volume: | |
| Vapor Space Volume (cu ft): | 22.5114 |
| Tank Diameter (ft): | 3.0000 |
| Effective Diameter (ft): | 4.3713 |
| Vapor Space Outage (ft): | 1.5000 |
| Tank Shell Length (ft): | 5.0000 |
| Vapor Density | |
| Vapor Density (lb/cu ft): | 0.0081 |
| Vapor Molecular Weight (lb/lb-mole): | 32.0400 |
| Vapor Pressure at Daily Average Liquid Surface Temperature (psia): | 1.4156 |
| Daily Avg. Liquid Surface Temp. (deg. R): | 519.0816 |
| Daily Average Ambient Temp. (deg. F): | 51.9625 |
| Ideal Gas Constant R (psia cuft / (lb-mol-deg R)): | 10.731 |
| Liquid Bulk Temperature (deg. R): | 513.6725 |
| Tank Paint Solar Absorptance (Shell): | 0.5400 |
| Daily Total Solar Insulation Factor (Btu/sqft day): | 1,452.1184 |
| Vapor Space Expansion Factor | |
| Vapor Space Expansion Factor: | 0.1473 |
| Daily Vapor Temperature Range (deg. R): | 38.7740 |
| Daily Vapor Pressure Range (psia): | 0.8748 |
| Breather Vent Press. Setting Range(psia): | 0.0600 |
| Vapor Pressure at Daily Average Liquid Surface Temperature (psia): | 1.4156 |
| Vapor Pressure at Daily Minimum Liquid Surface Temperature (psia): | 1.0351 |
| Vapor Pressure at Daily Maximum Liquid Surface Temperature (psia): | 1.9099 |
| Daily Avg. Liquid Surface Temp. (deg R): | 519.0816 |
| Daily Min. Liquid Surface Temp. (deg R): | 509.3881 |
| Daily Max. Liquid Surface Temp. (deg R): | 528.7751 |
| Daily Ambient Temp. Range (deg. R): | 23.3583 |
| Vented Vapor Saturation Factor | |
| Vented Vapor Saturation Factor: | 0.8988 |
| Vapor Pressure at Daily Average Liquid: Surface Temperature (psia): | 1.4156 |
| Vapor Space Outage (ft): | 1.5000 |
| Working Losses (lb): | 0.2862 |
| Vapor Molecular Weight (lb/lb-mole): | 32.0400 |
| Vapor Pressure at Daily Average Liquid Surface Temperature (psia): | 1.4156 |
| Annual Net Throughput (gal/yr.): | 265.0000 |

| | |
|---|---|
| Annual Turnovers: | 1.0000 |
| Turnover Factor: | 1.0000 |
| Tank Diameter (ft): | 3.0000 |
| Working Loss Product Factor: | 1.0000 |

| | |
|---|---|
| Total Losses (lb): | 9.1421 |

# TANKS 4.0.9d
## Emissions Report - Detail Format
## Individual Tank Emission Totals

### Emissions Report for: Annual

**Crescent Point - Methanol tank - Horizontal Tank**
**Vernal, Utah**

| | Losses(lbs) | | |
|---|---|---|---|
| Components | Working Loss | Breathing Loss | Total Emissions |
| Methyl alcohol | 0.29 | 8.86 | 9.14 |

# ATTACHMENT D

# EQUIPMENT SPECIFICATIONS

Revised: March 15, 2010

**NGEngines, Inc.**
1455 Michael Drive
Wood Dale, IL 60191
630-281-7107
www.ngengine.com

## Zero-Hour Non-Deteriorated Emissions for Permitting Customers

**GRAMS PER KW-HR**

| | D081NA | | D081L[5&6] | | D111L[5] | | D146L[5] | | D183L[5&6] | | D219L[5] | |
|---|---|---|---|---|---|---|---|---|---|---|---|---|
| EPA Engine Family | | | APWRB8.10NGP | | APWRB11.1NGP | | APWRB14.6NGP | | APWRB18.3NGP | | APWRB21.9NGP | |
| Model/Fuel | 8.1NA LPG | 8.1NA NG | 8.1LT LPG | 8.1LT NG | 11L LPG | 11L NG | 14.6L LPG | 14.6L NG | 18.3L LPG | 18.3L NG | 22L LPG | 22L NG |
| Displacement (Liter) | 8.071L | | 8.071L | | 11.051L | | 14.618L | | 18.273L | | 21.927L | |
| Rated Power (kW) @ 2000 RPM[1,2&3] | | | 136 | 176 | 155 | 224 | 238 | 335 | 317 | 422 | 352 | 485 |
| | g/KW-hr | g/KW-hr | g/KW-hr | g/KW-hr | g/KW-hr | g/KW-hr | g/KW-hr | g/KW-hr | g/KW-hr | g/KW-hr | g/KW-hr | g/KW-hr |
| BSCO | | | 0.53 | 0.18 | 0.33 | 0.35 | 0.15 | 0.08 | 0.24 | 0.28 | 0.34 | 0.13 |
| BSTHC | | | 0.09 | 0.85 | 0.09 | 2.98 | 0.06 | 0.20 | 0.10 | 0.75 | 0.05 | 0.43 |
| BSNMHC[7] | | | NA | 0.02 | NA | 0.34 | NA | 0.06 | NA | 0.01 | NA | 0.01 |
| BSNOx | | | 0.01 | 0.01 | 0.02 | 0.03 | 0.04 | 0.10 | 0.03 | 0.04 | 0.03 | 0.08 |
| BSTHC+Nox | | | 0.11 | 0.85 | 0.11 | NA | 0.10 | NA | 0.13 | NA | 0.08 | NA |
| BSNMHC+Nox | | | NA | 0.03 | NA | 0.37 | NA | 0.16 | NA | 0.04 | NA | 0.09 |
| BSFC (g/kw-hr)[4] | | | 0.27 | 0.25 | 0.30 | 0.26 | 0.32 | 0.24 | 0.24 | 0.22 | 0.27 | 0.22 |

**GRAMS PER HP-HR**

| | D081NA | | D081L[5&6] | | D111L[5] | | D146L[5] | | D183L[5&6] | | D219L[5] | |
|---|---|---|---|---|---|---|---|---|---|---|---|---|
| EPA Engine Family | 0 | | APWRB8.10NGP | | APWRB11.1NGP | | APWRB14.6NGP | | APWRB18.3NGP | | APWRB21.9NGP | |
| Model/Fuel | 8.1NA LPG | 8.1NA NG | 8.1LT LPG | 8.1LT NG | 11L LPG | 11L NG | 14.6L LPG | 14.6L NG | 18.3L LPG | 18.3L NG | 22L LPG | 22L NG |
| Displacement (Cubic Inch) | 492.5CID | | 492.5CID | | 674.5CID | | 892.1CID | | 1115.1CID | | 1338.0CID | |
| Rated Power (hp) @ 2000 RPM[1,2&3] | 0 | 0 | 183 | 236 | 208 | 301 | 319 | 449 | 425 | 566 | 472 | 650 |
| | g/hp-hr | g/hp-hr | g/hp-hr | g/hp-hr | g/hp-hr | g/hp-hr | g/hp-hr | g/hp-hr | g/hp-hr | g/hp-hr | g/hp-hr | g/hp-hr |
| BSCO | - | - | 0.39 | 0.13 | 0.25 | 0.26 | 0.11 | 0.06 | 0.18 | 0.21 | 0.25 | 0.10 |
| BSTHC | - | - | 0.07 | 0.63 | 0.07 | 2.22 | 0.04 | 0.15 | 0.07 | 0.56 | 0.04 | 0.32 |
| BSNMHC[7] | NA | - | NA | 0.02 | NA | 0.25 | NA | 0.04 | NA | 0.01 | NA | 0.00 |
| BSNOx | - | - | 0.01 | 0.00 | 0.01 | 0.02 | 0.03 | 0.07 | 0.02 | 0.03 | 0.02 | 0.06 |
| BSTHC+Nox | - | NA | 0.08 | NA | 0.08 | NA | 0.07 | NA | 0.10 | NA | 0.06 | NA |
| BSNMHC+Nox | NA | - | NA | 0.02 | NA | 0.28 | NA | 0.12 | NA | 0.03 | NA | 0.06 |
| BSFC (g/hp-hr)[4] | - | - | 0.20 | 0.19 | 0.22 | 0.19 | 0.24 | 0.18 | 0.18 | 0.16 | 0.20 | 0.16 |

**NOTES**

[1] Rated power is based on ISO3046 and/or ISO 8528.

[2] All ratings are gross flywheel horsepower corrected to 77°F at an altitude of 328 feet with no cooling fan or alternator losses using heating value for NG of 1015 BTU/SCF.

[3] Production tolerances in engines and installed components can account for power variations of +/- 5%. Altitude, temperature and excessive exhaust and intake restrictions should be applied to power calculations.

[4] Bsfc is based on 100% gross flywheel power rating and does not include fan or generator losses.

[5] Emissions shown are certified third-party Zero-hour data points suitable for site permitting calculations and are measured in accordance with US EPA NSPS 40CFR Part 1048

[6] Emissions shown are certified third-party Zero-hour data points suitable for site permitting calculations and are measured in accordance with US EPA NSPS 40CFR Part 60

[7] For NG, NMHC is reported in place of VOC for this report

# 14.6L NG ENGINE

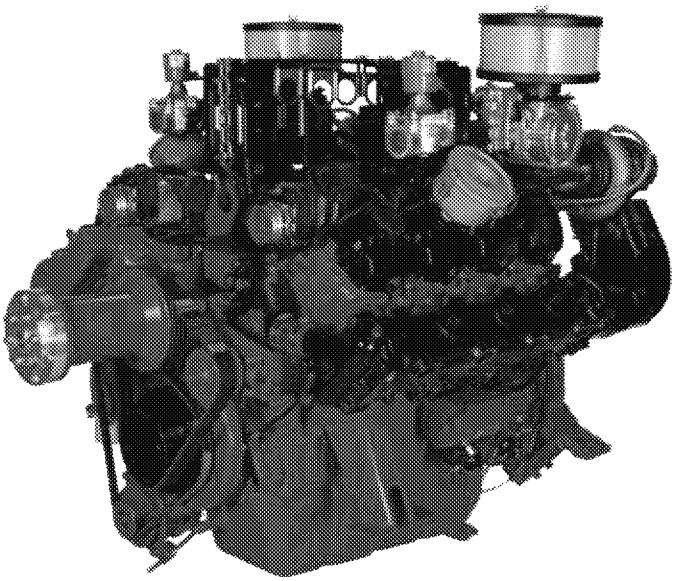

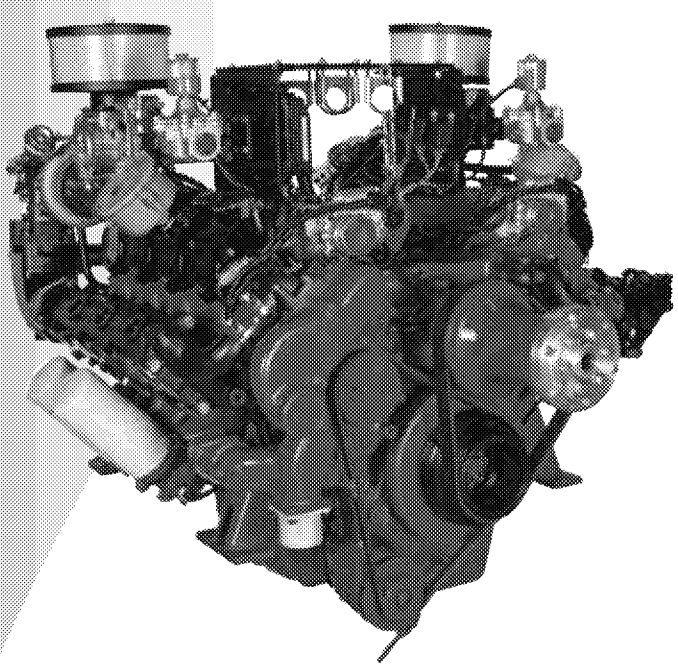

### FEATURES / OPTIONS

- US –EPA Certified and CARB Compliant
- Power: 300kWm Standby on NG
- Integrated Engine Controls Protection with CANBUS
- 50c Ambient Cooling Capacity
- UL2200 Compliant or Listed Components
- MasterTrak Telematics service (included for 1 year)

### DESCRIPTION

The NGE 14.6L is a US-EPA CERTIFIED Natural Gas and Propane engine. Built upon a proven marine-diesel grade block, the 8-Cylinder V, turbocharged and after-cooled engine features replaceable wet liners and watercooled exhaust. The engine was developed from the block-up to be a reliable and durable power unit.

Superior engine performance is provided by an ECU that integrates and coordinates all critical functions including: Governor, Variable Ingition Timing, Air:Fuel Ratio Control, Knock Suppression and Engine Protection.

NGEngines is an extension of the Power Solutions, Inc. (PSI) product line which is based upon GM blocks from 650cc to 8.1L.The NGE product lineup has 5 models with displacements of 8.1L, 11.1L, 14.6L, 18.3L and 21.9L. All PSI/NGE engines feature the same fuel systems and controls simplifying your application development and support.

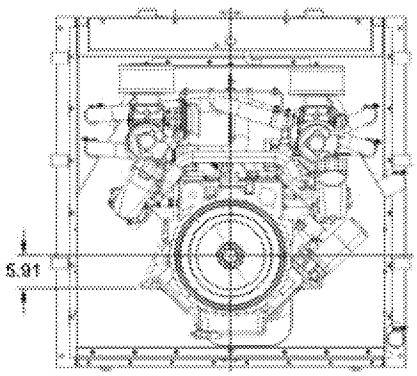


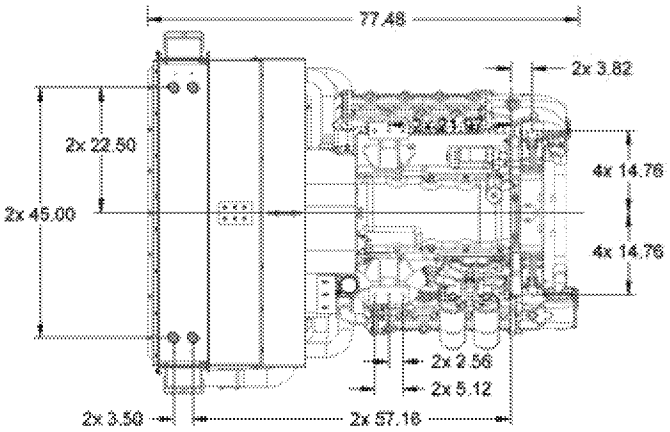

NG ENGINE

# 14.6L

| | UNITS | | 14.6L CAC | | | |
|---|---|---|---|---|---|---|
| | STD | METRIC | 1500 | | 1800 | |
| **GENERAL ENGINE MOUNTING** | | | | | | |
| Type | N/A | | V-type 4 cycle | | | |
| Number of cylinders | N/A | | 8 | | | |
| Aspiration | N/A | | Turbo Charge Air Cooled | | | |
| Bore | in | mm | 5.04 | 128 | 5.04 | 128 |
| Stroke | in | mm | 5.59 | 142 | 5.59 | 142 |
| Displacement | in^3 | L | 892 | 14.62 | 892 | 14.62 |
| Compression Ratio | N/A | | 10.5 | | | |
| Mean Piston Speed | ft/min | m/s | 1397.5 | 7.1 | 1677 | 8.52 |
| Rated Load | Hp | kW | 339 | 253 | 402 | 300 |
| MEP (@ rated Load) | psi | kPa | 201 | 14 | 198 | 14 |
| Rotation Viewed from Flywheel | N/A | | Counter Clockwise | | | |
| Firing Order | N/A | | 1-5-7-2-6-3-4-8-1 | | | |
| **DRY WEIGHT** | | | | | | |
| Fan to Flywheel | lb | kg | 3150 | 1429 | 3150 | 1429 |
| Rad to Flywheel | lb | kg | 4450 | 2018 | 4450 | 2018 |
| **WET WEIGHT** | | | | | | |
| Fan to Flywheel | lb | kg | 3291 | 1475 | 3291 | 1475 |
| Rad to Flywheel | lb | kg | 4955 | 2262 | 4955 | 2262 |
| **CG** | | | | | | |
| Distance from FW housing | in | mm | 6.26 | 159 | 6.26 | 159 |
| Distance above center of crankshaft | in | mm | 17.66 | 448.5 | 17.66 | 448.5 |
| **ENGINE MOUNTING** | | | | | | |
| Maximum Allowable Bending Moment at Rear of Block | lb ft | N m | 0 | 0 | 0 | 0 |
| Moment of Inertia About Roll Axis | lb ft^2 | kg m^2 | 0 | 0 | 0 | 0 |
| Flywheel housing | N/A | | SAE No. 1 | | | |
| Flywheel | N/A | | No. 14 | | | |
| **EXHAUST SYSTEM** | | | | | | |
| Type | | | | | | |
| Maximum allowable Back pressure | in HG | kPa | 3 | 10.2 | 3 | 10.2 |
| Standard Catalyst Back pressure | in HG | kPa | 1.5 | 5.1 | 1.5 | 5.1 |
| Exhaust Outlet Pipe Size | | | | | | |
| Maximum Turbine Inlet Temperature | F | C | 1382 | 750 | 1382 | 750 |
| Exhuast Flow at Rated Power | lb/hr | kg/hr | 2099 | 952 | 2492 | 1131 |
| Exhuast Flow at Rated Power @1350F | cfm | m^3/min | 1596 | 45.2 | 1895 | 53.6 |
| **AIR INDUCTION SYSTEM** | | | | | | |
| Maximum allowable Intake Air Restriction with Air Cleaner | | | | | | |
| Clean | inH2O | kPa | 5 | 1.24 | 5 | 1.24 |
| Dirty | inH2O | kPa | 15 | 3.74 | 15 | 3.74 |
| Combustion Air required | lb/hr | kg/hr | 1975 | 896 | 2346 | 1064 |
| Combustion Air required | cfm | m^3/min | 448 | 13.1 | 532 | 15.6 |
| **ELECTRICAL SYSTEM** | | | | | | |
| Minimum Recommended Battery Capacity | AH | | 200 | | | |
| Cold Cranking Current | | | | | | |
| Engine only | CCA | | 1000 | | | |
| Engine with Drive train | CCA | | 1000 | | | |
| Maximum Allowable Resistance of Starting Circuit | Ohms | | 0.002 | | | |
| Staring Motor Power | HP | kW | 9.4 | 7 | 9.4 | 7 |
| Battery Charging Alternator | | | | | | |
| Voltage | Volts | | 24 | | | |
| Current | Amps | | 45 | | | |

| | UNITS | | 14.6L CAC | | | |
|---|---|---|---|---|---|---|
| | STD | METRIC | 1500 | | 1800 | |
| **COOLING SYSTEM** | | | | | | |
| Coolant Capacity | | | | | | |
| Engine only | gal | L | 9.5 | 43.2 | 9.5 | 43.2 |
| Engine with Radiator | gal | L | 50 | 227 | 50 | 227 |
| Engine Coolant Flow | gal/min | L/min | 151 | 570 | 180 | 680 |
| Water Pump Speed | RPM | | 0 | 0 | 0 | 0 |
| Heat rejected to Cooling water at rated Load | btu/min | kcal/sec | 13094 | 55 | 16189 | 68 |
| Maximum Intake Air Temperature (IAT) | F | C | 155 | 68 | 155 | 68 |
| ECU IAT Warning | F | C | 0 | 0 | 0 | 0 |
| ECU IAT Shutdown | F | C | 0 | 0 | 0 | 0 |
| Maximum Coolant Friction Head External to the engine | psi | bar | 5.8 | 0.4 | 5.8 | 0.4 |
| Maximum Air Restriction Across a Radiator | inH2O | mmH2O | 0.5 | 12.8 | 0.5 | 12.8 |
| Standard Thermostat Range | | | | | | |
| Cracking Temperature | F | C | 160 | 71 | 160 | 71 |
| Full Open Temperature | F | C | 185 | 85 | 185 | 85 |
| Maximum Output Pressure of Engine Water Pump | | | | | | |
| Maximum Allowable Pressure Cap | psi | bar | 14.7 | 1 | 14.7 | 1 |
| Ambient Clearance Open Genset (water) | | | | | | |
| Specified | F | C | 122 | 50 | 122 | 50 |
| Ambient Clearance (Oil) | | | | | | |
| Specified | F | C | 122 | 50 | 122 | 50 |
| Maximum Allowable Top Tank Temperature | F | C | 230 | 110 | 230 | 110 |
| ECU Warning | F | C | 220 | 104 | 220 | 104 |
| ECU Shutdown | F | C | 230 | 110 | 230 | 110 |
| Fan Power | HP | kW | 13 | 9.7 | 22 | 16.4 |
| Fan Diameter, including blades | in | mm | 45 | 1143 | 45 | 1143 |
| Fan Speed | RPM | | 1200 | | 1440 | |
| Cooling Fan Air Flow @ 1" H2O Stat. Press and 125F @ Rad | CFM | m^3/min | 25714 | 728.13 | 30000 | 849.5 |
| Charge Air Cooler | | | | | | |
| Compressor Outlet Temperature | F | C | 0 | 0.0 | 0 | 0.0 |
| Compressor Flow Rate | CFM | m^3/min | 0 | 0.0 | 809 | 22.9 |
| **LUBRICATION SYSTEM** | | | | | | |
| Oil Specification | SAE 15W-40 Low Ash Gas engine oil (.25-.5% by wt), API CD/CF or higher | | | | | |
| Oil Pressure | | | | | | |
| Idle | | | | | | |
| Min | Psi | Bar | 13 | 0.9 | 13 | 0.9 |
| Max | Psi | Bar | 43.5 | 3 | 43.5 | 3 |
| Rated Speed | | | | | | |
| Min | Psi | Bar | 43.5 | 3 | 43.5 | 3 |
| Max | Psi | Bar | 94.5 | 6.5 | 94.5 | 6.5 |
| Maximum Allowable Oil Temperature | F | C | 230 | 110 | 230 | 110 |
| Engine Oil Capacity | | | | | | |
| Min | Qts | L | 26.5 | 25 | 26.5 | 25 |
| Max | Qts | L | 32.75 | 31.0 | 32.75 | 31.0 |
| Oil Filter Capacity | Qts | L | 7.5 | 7.1 | 7.5 | 7.1 |
| **FUEL SYSTEM** | | | | | | |
| Low Pressure Dry Processed Natural Gas (Spec) | | | | | | |
| Fuel Composition | | | | | | |
| Maximum EPR Rated Pressure | psi | kPa | 1 | 6.89 | 1 | 6.89 |
| Maximum Running pressure to Electronic Pressure Regulator (EPR) | inH2O | kPa | 11 | 2.74 | 11 | 2.74 |
| Minimum Running pressure to EPR | inH2O | kPa | 7 | 1.74 | 7 | 1.74 |
| Minimum Gas Supply Pipe Size | | | 2 x 1-1/4" NPT | | | |
| Low Pressure Vapor Propane (HD5) | | | | | | |
| Fuel Composition | | | | | | |
| Maximum EPR Rated Pressure | psi | kPa | 1 | 6.89 | 1 | 6.89 |
| Maximum Running Pressure to EPR | inH2O | kPa | 11 | 2.74 | 11 | 2.74 |
| Minimum Running Pressure to EPR | inH2O | kPa | 7 | 1.74 | 7 | 1.74 |
| Minimum LPG Supply Pipe Size | | | 2 x 1-1/4" NPT | | | |

*The preceeding pipe sizes are only suggestions and piping sizes may vary with temperature, pressure, distance from supply and application of local codes. Gas must be available at adequate volume and pressure for engine at the EPR.*

| Constituent | Abbrev | Mole % | Norm |
|---|---|---|---|
| Water Vapor | H2O | 0.0000 | 0.0000 |
| Methane | CH4 | 92.2700 | 92.2700 |
| Ethane | C2H6 | 2.5000 | 2.5000 |
| Propane | C3H8 | 0.5000 | 0.5000 |
| Isobutane | iso-C4H1O | 0.0000 | 0.0000 |
| Norbutane | nor-C4H1O | 0.2000 | 0.2000 |
| Isopentane | iso-C5H12 | 0.0000 | 0.0000 |
| Norpentane | nor-C5H12 | 0.1000 | 0.1000 |
| Hexane | C6H14 | 0.0500 | 0.0500 |
| Heptane | C7H16 | 0.0000 | 0.0000 |
| Nitrogen | N2 | 3.4800 | 3.4800 |
| Carbon Dioxide | CO2 | 0.9000 | 0.9000 |
| Hydrogen Sulfide | H2S | 0.0000 | 0.0000 |
| Carbon Monoxide | CO | 0.0000 | 0.0000 |
| Hydrogen | H2 | 0.0000 | 0.0000 |
| Oxygen | O2 | 0.0000 | 0.0000 |
| Helium | HE | 0.0000 | 0.0000 |
| Neopentane | neo-C5H12 | 0.0000 | 0.0000 |
| Octane | C8H18 | 0.0000 | 0.0000 |
| Nonane | C9H20 | 0.0000 | 0.0000 |
| Ethylene | C2H4 | 0.0000 | 0.0000 |
| Propylene | C3H6 | 0.0000 | 0.0000 |
| TOTAL (Volume %) | | 100.0000 | 100.0000 |

| | |
|---|---|
| Fuel Makeup: | Nat Gas |
| Unit of Measure: | English |

**Calculated Fuel Properties**

| | |
|---|---|
| Caterpillar Methane Number: | 84.8 |
| Lower Heating Value (Btu/scf): | 905 |
| Higher Heating Value (Btu/scf): | 1004 |
| WOBBE Index (Btu/scf): | 1168 |
| THC: Free Inert Ratio: | 21.83 |
| Total % Inerts (% N2, CO2, He): | 4.38% |
| RPC (%) (To 905 Btu/scf Fuel): | 100% |
| Compressibility Factor: | 0.998 |
| Stoich A/F Ratio (Vol/Vol): | 9.45 |
| Stoich A/F Ratio (Mass/Mass): | 15.75 |
| Specific Gravity (Relative to Air): | 0.600 |
| Specific Heat Constant (K): | 1.313 |

**CONDITIONS AND DEFINITIONS**

Caterpillar Methane Number represents the knock resistance of a gaseous fuel. It should be used with the Caterpillar Fuel Usage Guide for the engine and rating to determine the rating for the fuel specified. A Fuel Usage Guide for each rating is included on page 2 of its standard technical data sheet.

RPC always applies to naturally aspirated (NA) engines, and turbocharged (TA or LE) engines only when they are derated for altitude and ambient site conditions.

Project specific technical data sheets generated by the Caterpillar Gas Engine Rating Pro program take the Caterpillar Methane Number and RPC into account when generating a site rating.

Fuel properties for Btu/scf calculations are at 60F and 14.696 psia.

Caterpillar shall have no liability in law or equity, for damages, consequently or otherwise, arising from use of program and related material or any part thereof.

**FUEL LIQUIDS**

Field gases, well head gases, and associated gases typically contain liquid water and heavy hydrocarbons entrained in the gas. To prevent detonation and severe damage to the engine, hydrocarbon liquids must not be allowed to enter the engine fuel system. To remove liquids, a liquid separator and coalescing filter are recommended, with an automatic drain and collection tank to prevent contamination of the ground in accordance with local codes and standards.

To avoid water condensation in the engine or fuel lines, limit the relative humidity of water in the fuel to 80% at the minimum fuel operating temperature.

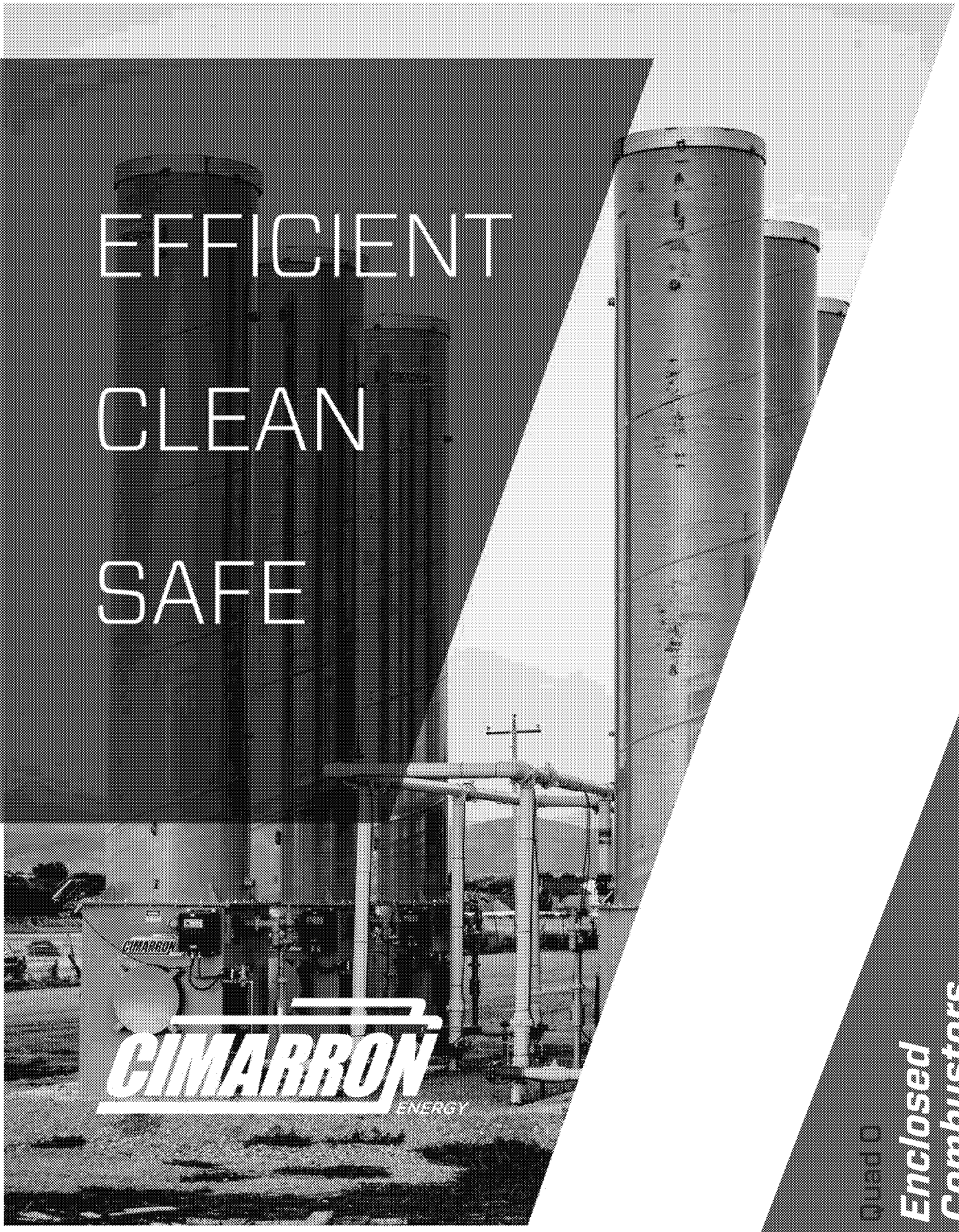


# EFFICIENT
# CLEAN
# SAFE

CIMARRON ENERGY

## Enclosed Combustors

Quad O

**CALCULATED FLOW CAPACITY CURVE**
24" STANDARD ECD (2-24-64-0000)

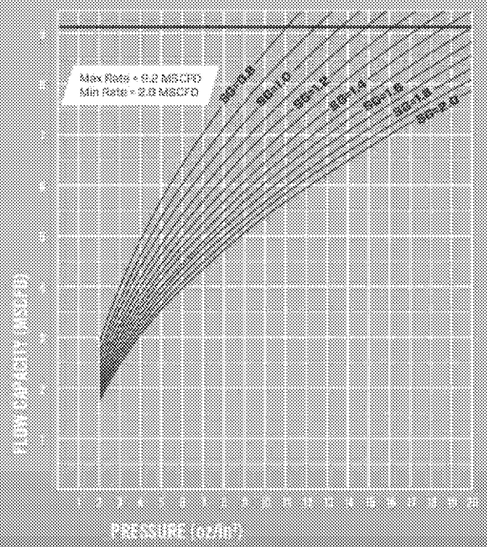


**24" STANDARD**

**CALCULATED FLOW CAPACITY CURVE**
30" STANDARD ECD (2-30-88-0000)

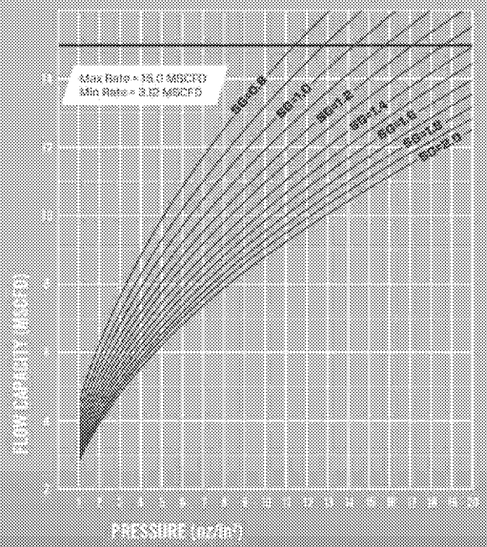


**30" STANDARD**

**CALCULATED FLOW CAPACITY CURVE**
48" STANDARD ECD (2-48-210-0000)

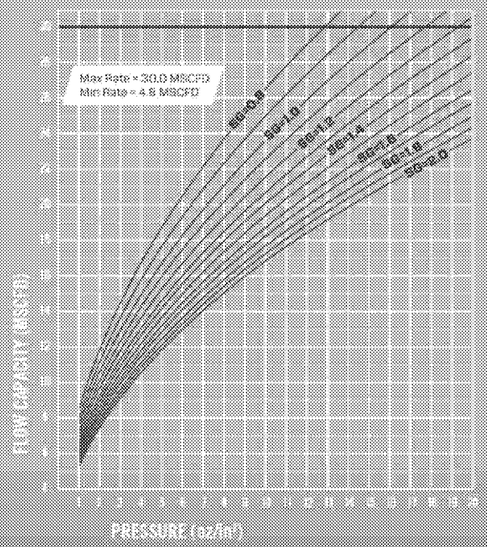


**48" STANDARD**

**CALCULATED FLOW CAPACITY CURVE**
60" STANDARD ECD (3-60-440-0000)

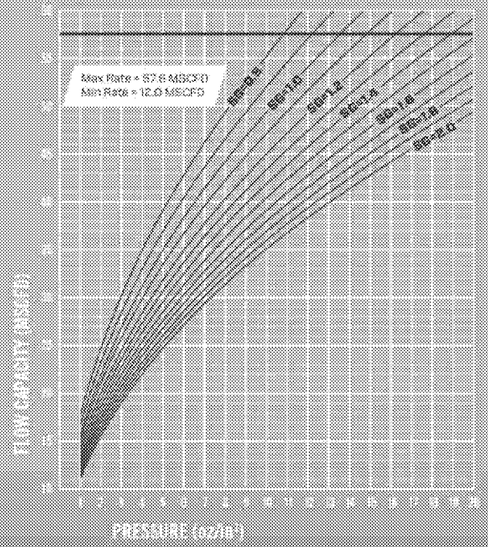


**60" STANDARD**

**CALCULATED FLOW CAPACITY CURVE**
48" HIGH VOLUME ECD (3-48HV-90-0000)

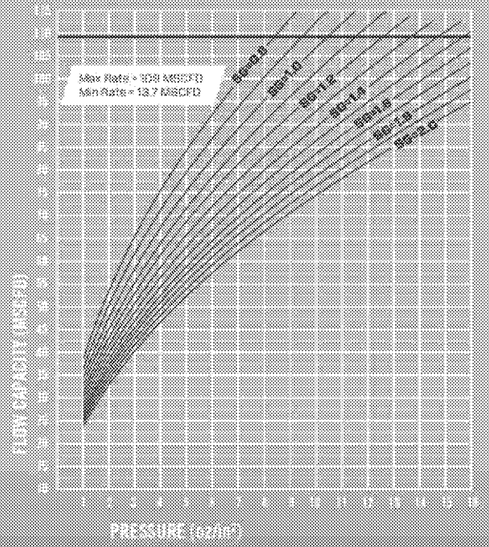


**48" HIGH VOLUME**

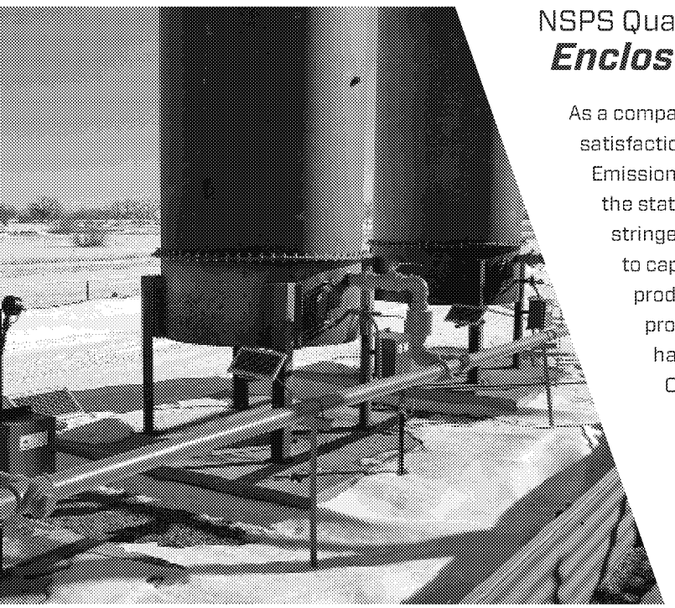

NSPS Quad O

## *Enclosed Combustors*

As a company committed to both environmental safety and client satisfaction, Cimarron is proud to offer our Storage Tank VOC Emission Control Devices (ECD's). Pioneered in Colorado prior to the state becoming one of the first in the nation to implement stringent emission cutting rules, Cimarron's ECDs are designed to capture and combust VOC emissions from the oil/condensate production storage tanks. These enclosed combustor units provide a clean, safe, and efficient solution for eliminating hazardous vapors and ensuring regulatory compliance. All Cimarron's ECD's have been manufacturer performance tested in accordance with the EPA's strict new NSPS OOOO emission standards for storage vessel control devices. Designed for both low volume and high volume applications, Cimarron flares are enclosed for maximum safety benefits. In addition, the units are both easy to install and user friendly, offering reliable operations and low-maintenance care.

## *Design Features and Options*

- Manufacturer Performance Tested as per NSPS OOOO §60.5413(d)
- Demonstrates VOC Destruction Efficiency >99%
- Eliminates the requirement for in-field testing to demonstrate continuous compliance.
- Solar powered BMS and data logging functions available
- Cimarron actuator package for low flow and flameout shutdown
- Drip tank for free liquid removal
- User friendly and easy to install

Quad O
*Enclosed Combustors*

## Specifications

| Unit | Max / Min Flowrate Range * | Heat Release* | Overall Dimensions (pad not included) | Inlet Connection | Flame Cell size** |
|---|---|---|---|---|---|
| 24" STD | 9.2 / 2.0 MSCFD | .98 MMBtu/hr | 24"D x 8.5'H | 3" NPT | 24" |
| 30" STD | 15 / 3.12 MSCFD | 1.6 MMBtu/hr | 30"D x 8.5'H | 3" NPT | 30" |
| 48" STD | 30 / 4.8 MSCFD | 3.2 MMBtu/hr | 48"D x 12'H | 3" NPT | 48" |
| 60" STD | 57.6 / 12.0 MSCFD | 6.1 MMBtu/hr | 60"D x 12.5'H or 16.5'H | 3" NPT | 60" |
| 48" HV | 109 / 13.7 MSCFD | 11.7 MMBtu/hr | 48"D x 25'H | 3" NPT | (4) 24" |

## Available Options

| | |
|---|---|
| ***ARC Burner Management and Ignition systems*** | ARC—basic light and relight functionality. Flexible and easy to upgrade. |
| | ARC Hybrid—Upgrade to the ARC system. Facilitates inlet gas shutdown in the event of a pilot failure. Requires actuator option below |
| | ARC SAU— Upgrade to the ARC system. Allows for low flow condition shutdown and allows tanks to build pressure. Std setup is 2 oz closure and 5 oz open. Ranges are adjustable and can be modified in the field. Requires actuator option below. |
| ***Standard Drip Pot*** | 24" x 48" w/ 4" FNPT connections. Liquid capacity 90 gal |
| | 20" x 36" w/ 3" FNPT connections. Liquid capacity 46 gal |
| | 16" x 36" w/ 3" FNPT connections. 5' height. Liquid capacity 29 gal. |
| | 16" x 36" w/ 3" FNPT connections. 7' height. Liquid capacity 29 gal. |
| ***Custom Drip Pot*** | Required size/connections/capacity |
| ***Cimarron "Sentry" Datalogger*** | USB port for easy data downloads. Single analog input for pilot flame sense or thermocouple data. Two contact switch closure inputs |
| ***Actuator Package*** | Cimarron piston-style actuator for burner management system control. Required for Hybrid and SAU ARC systems. Ranges are adjustable and can be modified in the field. |
| ***Safety Float Check Valve option for Drip Pot*** | 4" x 6" |
| | 3" x 6" |
| ***Stack thermocouple*** | 18" Type K thermocouple with wire |
| ***Concrete Pad*** | Standard concrete pad requested |
| ***High Temp Kit (HV unit excluded)*** | All stainless steel jet kit |
| ***Inline Flame arrestor*** | 2" Wenco Flame arrestor |
| ***Header plumbing (HV unit only)*** | 3" Wenco Flame arrestor |
| | 2" header plumbing from integral drip box to burner manifold |
| | 3" header plumbing from integral drip box to burner manifold |

We would be glad to discuss your production equipment needs. Please contact us at your convenience at **405-928-7373** or visit our website at **CimarronEnergy.com**, where you will find a design input sheet if you would like us to address your specific requirements.

CIMARRON ENERGY

# ATTACHMENT E

# FEDERAL RULE APPLICABILITY

**Crescent Point Energy U.S. Corp**
**Horseshoe Bend Fed 15-29-6-21E**
**POTENTIALLY APPLICABLE FEDERAL REGULATIONS**

A breakdown of federal regulations will be discussed, including whether or not a rule is applicable and why or why not. Henceforth, the Horseshoe Bend Fed 15-29-6-21E production facility site will be referred to as either the "Site" or the "Facility" throughout this document.

## 40 CODE OF FEDERAL REGULATIONS (CFR) 60
## STANDARDS OF PERFORMANCE FOR NEW STATIONARY SOURCES

### *Subpart JJJJ - Stationary Spark Ignition Internal Combustion Engines*

Section 60.4230(a) states "The provisions of this subpart are applicable to manufacturers, owners, and operators of stationary spark ignition (SI) internal combustion engines (ICE) as specified in paragraphs (a)(1) through (5) of this section. For the purposes of this subpart, the date that construction commences is the date the engine is ordered by the owner or operator." As an operator, Section 60.4230(a)(3) reads "Owners and operators of stationary SI ICE that commence construction after June 12, 2006, where the stationary SI ICE are manufactured:

(i) On or after July 1, 2007, for engines with a maximum engine power greater than or equal to 500 HP (except lean burn engines with a maximum engine power greater than or equal to 500 HP and less than 1,350 HP);
(ii) (ii) on or after January 1, 2008, for lean burn engines with a maximum engine power greater than or equal to 500 HP and less than 1,350 HP;
(iii) (iii) on or after July 1, 2008, for engines with a maximum engine power less than 500 HP; or
(iv) (iv) on or after January 1, 2009, for emergency engines with a maximum engine power greater than 19 KW (25 HP).

The engines installed at the site are stationary spark ignition internal combustion engines (ICE). The engines have a maximum engine power of less than 500 HP and were manufactured after 2008, therefore are subject to NSPS Subpart JJJJ.

## 40 CFR 63
## NATIONAL EMISSION STANDARDS FOR HAZARDOUS AIR POLLUTANTS FOR SOURCE CATEGORIES

### *Subpart ZZZZ – Reciprocating Internal Combustion Engines (RICE)*

Section 63.6580 states the purpose of Subpart ZZZZ as "establishes national emission limitations and operating limitations for hazardous air pollutants (HAP) emitted from stationary reciprocating internal combustion engines (RICE) located at major and area sources of HAP emissions. This subpart also establishes requirements to demonstrate initial and continuous compliance with the emission limitations and operating limitations." Section 63.6585 explains "You are subject to this subpart if you own or operate a stationary RICE at a major or area source of HAP emissions, except if the stationary RICE is being tested at a stationary RICE test cell/stand." Section 63.6590(a)(1)(iii) reads, "For stationary RICE located at an area source of HAP emissions, a stationary RICE is existing if you commenced construction or reconstruction of the stationary RICE before June 12, 2006." Section 63.6590(a)(2)(iii) reads, "A stationary RICE located at an area source of HAP emissions is new if you commenced construction of the stationary RICE on or after June 12, 2006". Section 63.6590(c) reads "An affected source that meets any of the criteria in paragraphs (c)(1) through (7) of this section must meet the requirements of this part by meeting the requirements of 40 CFR part 60 subpart IIII, for compression ignition engines or 40 CFR part 60 Subpart JJJJ, for spark ignition engines. No further requirements apply for such engines under this part." Section 63.6590(c)(1) reads "A new or reconstructed stationary RICE located at an area source."

The Site is an area source emitting less than 10 tons per year of any single HAP and less than 25 tons per year of any combination of HAPs. Construction of the engine at the Facility occurred before June 12, 2006. Therefore, the engines are considered existing stationary RICE located at an area source. Subpart ZZZZ will apply to these engines.

**Crescent Point Energy U.S. Corp**
**Horseshoe Bend Fed 15-29-6-21E**
**POTENTIALLY APPLICABLE FEDERAL REGULATIONS**

## 40 CODE OF FEDERAL REGULATIONS (CFR) 60
## STANDARDS OF PERFORMANCE FOR NEW STATIONARY SOURCES

### *Subpart Kb - Standards of Performance for Volatile Organic Liquid Storage Vessels (Including Petroleum Liquid Storage Vessels) for Which Construction, Reconstruction, or Modification Commenced After July 23, 1984*

Subpart Kb applies to each storage vessel with a capacity greater than or equal to 75 cubic meters (472 bbls) that is used to store volatile organic liquids. However, the subpart does not apply to storage vessels with a design capacity less than or equal to 1,589.874 cubic meters (10,000 bbls) used for petroleum or condensate stored, processed, or treated prior to custody transfer. Each storage tank on site will be less than 1,589.874 cubic meters and will be used for petroleum or condensate stored, processed, or treated prior to custody transfer. Therefore, NSPS Subpart Kb will not apply to this facility.

### *Subpart KKK - Standards of Performance for Equipment Leaks of VOC From Onshore Natural Gas Processing Plants for Which Construction, Reconstruction, or Modification Commenced After January 20, 1984, and on or Before August 23, 2011*

Subpart KKK applies to onshore natural gas processing plants. Natural gas processing plant is defined as any processing site engaged in the extraction of natural gas liquids from field gas, fractionation of mixed natural gas liquids to natural gas products, or both. This facility will not extract natural gas liquids from field gas; therefore, NSPS Subpart KKK will not apply to this facility.

### *Subpart LLL—Standards of Performance for SO2 Emissions From Onshore Natural Gas Processing for Which Construction, Reconstruction, or Modification Commenced After January 20, 1984, and on or Before August 23, 2011*

Subpart LLL applies to sweetening units and sweetening units followed by sulfur recovery units that process natural gas. This facility will not have a sweetening unit; therefore, NSPS Subpart LLL will not apply to this facility.

### *Subpart OOOO—Standards of Performance for Crude Oil and Natural Gas Production, Transmission and Distribution for which Construction, Modification or Reconstruction Commenced after August 23, 2011, and on or before September 18, 2015*

Section 60.5365 states "You are subject to the applicable provisions of this subpart if you are the owner or operator of one or more of the onshore affected facilities listed in paragraphs (a) through (g) of this section for which you commence construction, modification or reconstruction after August 23, 2011..."

If this well site addressed in this NOI was constructed, modified, or reconstructed after August 23, 2011 and before September 18, 2015, then certain sections of Subpart OOOO may apply. The potential applicable sections are listed below.

> "(a) Each gas well affected facility, which is a single natural gas well... " The well(s) is an oil well. Therefore, this particular section of this rule will not apply.
>
> "(b) Each centrifugal compressor affected facility..." There are no centrifugal compressors found at the well site. Therefore, this particular section of this rule will not apply.
>
> "(c) Each reciprocating compressor affected facility..." There are no reciprocating compressors found at the well site. Therefore, this particular section of this rule will not apply.
>
> "(d)(1) For the oil production segment (between the wellhead and the point of custody transfer to an oil pipeline), each pneumatic controller affected facility..." There are no continuous bleed natural gas-driven pneumatic controllers operating at a natural gas bleed rate greater than 6 scfh found at the well site. Therefore, this particular section of this rule will not apply.
>
> "(e) Each storage vessel affected facility, which is a single storage vessel located in the oil and natural gas production segment, natural gas processing segment or natural gas transmission and storage segment, and has the potential for VOC emissions equal to or greater than 6 tpy as determined according to this section by October 15, 2013 for Group 1 storage vessels and by April 15, 2014, or 30 days after startup (whichever is later) for Group 2 storage vessels..." If the well(s) feeding the storage vessels located at the well site are completed, recompleted, or undergo a modification within the applicability dates, then this section may apply. The potential for VOC emissions

will be calculated using a generally accepted model or calculation methodology, based on the maximum average daily throughput determined for a 30-day period of production prior to the applicable emission determination deadline specified in this subsection. The determination may take into account requirements under a legally and practically enforceable limit in an operating permit or other requirement established under a federal, state, local or tribal authority.

"(f) The group of all equipment, except compressors, within a process unit is an affected facility..." There are no process units at this well site. Therefore, this particular section of this rule will not apply.

"(g) Sweetening units located at onshore natural gas processing plants..." This well site is not a natural gas processing plant. Therefore, this particular section of this rule will not apply.

***Subpart OOOOa - Standards of Performance for Crude Oil and Natural Gas Facilities for which Construction, Modification, or Reconstruction Commenced after September 18, 2015***

Section 60.5365a states "You are subject to the applicable provisions of this subpart if you are the owner or operator of one or more of the onshore affected facilities listed in paragraphs (a) through (j) of this section for which you commence construction, modification, or reconstruction after September 18, 2015."

If the well site addressed in this Notice of Intent (NOI) are constructed, modified, or reconstructed after September 18, 2015, then certain sections of Subpart OOOOa may apply. The potential applicable sections are listed below.

"(a) Each well affected facility, which is a single well that conducts a well completion operation following hydraulic fracturing or refracturing…" Oil wells that have undergone well completions operations before the applicability deadline are not subject to this particular section. If the well(s) undergoes a well completions operation following hydraulic fracturing or refracturing after the applicability deadline then this particular section will apply at that time.

"(b) Each centrifugal compressor affected facility, which is a single centrifugal compressor using wet seals...." There are no centrifugal compressors located at the well site. Therefore, this particular section does not apply.

"(c) Each reciprocating compressor affected facility, which is a single reciprocating compressor...." There are no reciprocating compressors located at the well site. Therefore, this particular section does not apply.

"(d)(1) Each pneumatic controller affected facility not located at a natural gas processing plant, which is a single continuous bleed natural gas-driven pneumatic controller operating at a natural gas bleed rate greater than 6 scfh..." There are no continuous bleed natural gas-driven pneumatic controllers operating at a natural gas bleed rate greater than 6 scfh located at the well site. Therefore, this particular section does not apply.

"(e) Each storage vessel affected facility, which is a single storage vessel with the potential for VOC emissions equal to or greater than 6 tpy as determined according to this section..." If the well(s) feeding the storage vessels located at the well site are completed, recompleted, or undergo a modification after the applicability deadline, then this section may apply. The potential for VOC emissions will be calculated using a generally accepted model or calculation methodology, based on the maximum average daily throughput determined for a 30-day period of production prior to the applicable emission determination deadline specified in this subsection. The determination may take into account requirements under a legally and practically enforceable limit in an operating permit or other requirement established under a federal, state, local or tribal authority.

"(f) The group of all equipment within a process unit is an affected facility..." There are no process units located at the well site. Therefore, this particular section does not apply.

"(g) Sweetening units located at onshore natural gas processing plants that process natural gas produced from either onshore or offshore wells..." The well site is not a natural gas processing plant. Therefore, this particular section of this rule does not apply.

"(h)(2) For well sites, each pneumatic pump affected facility, which is a single natural gas-driven diaphragm pump..." There are no pneumatic pumps located at the well site. Therefore, this particular section does not apply.

"(i) Except as provided in §60.5365a(i)(2), the collection of fugitive emissions components at a well site, as defined in §60.5430a, is an affected facility..." If the well site is constructed, modified, or reconstructed after the applicability deadline, then this section will apply.

"(j) The collection of fugitive emissions components at a compressor station, as defined in §60.5430a, is an affected facility..." This well site is not a compressor station. Therefore, this particular section does not apply.

## 40 CFR 63
## NATIONAL EMISSION STANDARDS FOR HAZARDOUS AIR POLLUTANTS FOR SOURCE CATEGORIES

Subpart HH applies to owners and operators of triethylene glycol (TEG) dehydration units. This facility will not have a TEG dehydration unit; therefore, MACT Subpart HH will not apply to this facility.

Subpart HHH applies to owners and operators of natural gas transmission and storage facilities that are major sources of HAP emissions. This facility will not be a major source of HAP emissions; therefore, MACT Subpart HHH will not apply to this facility.