Series 1001, 1001A and 1001XL Level Controllers

Proven Performers:

Versatile designs with no-bleed, forced-balanced operation

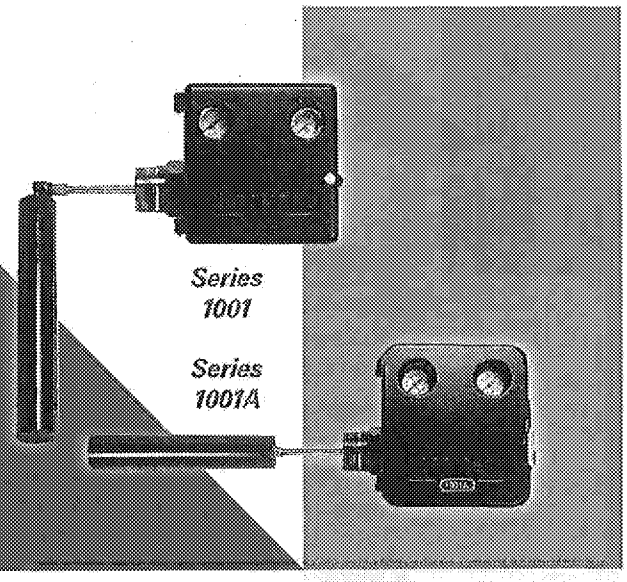

Norriseal has been a leader in providing quality level measurement devices to the petroleum market for over five decades. In addition to oil and gas applications, Norriseal level products serve in marine, steel, and industrial markets.

This brochure describes the Series 1001, the 1001A, and the 1001XL Liquid Level Controllers. The Series 1001 and 1001A can be right-hand or left-hand mounted while the 1001XL is used where back-mounting is preferred.

Series 1001

The economical Series 1001 Level Controller uses a non-weatherproof case/cover.

Series 1001A

The Series 1001A Level Controller uses a weather-resistant sealed case and a manifold-style pilot assembly.

Series 1001XL

The Series 1001XL Level Controller offers the features of a Series 1001A, but with a back-mount connection.

Features

- **No-bleed Pilots.** The pneumatic controller is equipped with one of three types of no-bleed pilots: a snap pilot, throttling pilot, or patented Envirosave™ pilot.
- **Removable Door.** The controller door can only be removed after opening 90°. This feature prevents the door from vibrating loose while in the closed position. A lever latch keeps a positive engagement between the case and the door.
- **Weather-resistant Sealed Case (1001A & 1001XL).** An O-ring gasket seals internals from outside weather and allows the harmful exhaust gases to be vented to a remote area by tubing the vent connection to an exhaust manifold (when equipped with piped exhaust option).
- **Built-In Filter.** A built-in 40-micron stainless steel filter in the gas supply connection reduces required maintenance of the controller's pilot.

Contents

2 Design
3 Principle of Operation
4 Performance Characteristics
5 Materials
6 How to Order
7 Model Code: Level Controllers
8 Dimensions
10 Vertical Chambers
12 Domes and Horizontal Chambers
13 Model Code: Vertical Chambers and Domes
14 Model Code: Horizontal Chambers
15 Applications

NORRISEAL™ A DOVER COMPANY

Engineered Performance

Features (continued)

- **Interface Control.** A wide spring range makes the control of a liquid interface possible with a standard displacer.
- **Marine Service.** Stainless steel internals are available.
- **Field-Reversible Action.** This adjustment determines whether rising liquid level will increase or decrease pilot output.
- **Right- or Left-Hand Mount (1001 & 1001A).** The controller may be changed for right-hand or left-hand mount in the field without additional parts.
- **Electric Controller.** This option utilizes a standard electric switch; SPDT or DPDT.
- **Dual Seal Certification.** CSA certified Dual Seal to ANSI/ISA 12.27.01 standard meets CEC and NEC secondary seal requirement.
- **Split Displacer.** For liquid dump spans greater than the standard displacers can provide, a split displacer can give dump spans up to 70 feet in length.
- **NACE.** All controllers can be configured to meet NACE MR0175-2002 specifications.

Design

Snap Pilot

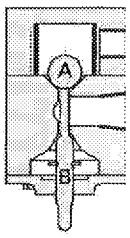

Snap Pilot

The pilot is comprised of two valves – one to admit pilot pressure, and one to exhaust pressure.

Ball "A" controls the flow of gas into the pilot and is held closed with force exerted by supply pressure on the seating area of the ball.

When the force transmitted to thrust pin "B" is sufficient to overcome the force holding Ball "A" seated, "A" snaps upward allowing gas to flow past "A" and out the side port of the pilot.

The spherical end of thrust pin "B" closes the exhaust port the instant ball "A" snaps upward. The exhaust port seating area is smaller than the seating area of the supply port; therefore, the thrust pin will remain seated against supply pressure until force on the thrust pin diminishes.

A simultaneous action occurs as force is removed from thrust pin "B". Pilot pressure opens the exhaust port by unseating the thrust pin, and supply pressure forces ball "A" to close the supply port. The difference in seating area gives this pilot Snap-Action. The pilot then vents through the thrust pin entry hole.

Throttling Pilot

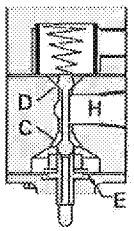

Throttling Pilot

Two valves are used to admit and exhaust pressure. A diaphragm "E" used in cooperation with the valves creates a Force-Balance Pilot.

The pilot output pressure acts upon the diaphragm so that the diaphragm pushes back with the same force being applied by the push rod. These balanced forces are the reason for the term "Force-Balance."

The throttle pilot works in the same manner as the snap pilot except the output pressure is proportioned to the amount of force applied to the pin. More force on the pin produces a proportionate increase in pilot pressure.

When the pin force changes, the pilot seeks a new balance point by either exhausting the output loading at valve "C" or unseating valve "D" to increase output loading. Instrument gas does not flow while the pilot is in balance.

Envirosave™ Pilot

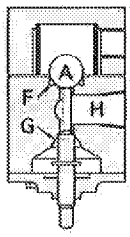

Envirosave™ Pilot

This patented pilot works identically to the snap pilot. The difference between the two is the O-ring seals "F" and "G," which give a positive seal to eliminate leakage and prevent fugitive emissions. The EPA has independently measured the Envirosave™ pilot to have a zero CFH leak rate.*

Electric Level Switch

The electric level switch uses the force balance principle to open and close an electrical switch in response to rising or falling levels. Two standard switches are available, single pole double throw (SPDT) or double pole double throw (DPDT), both with explosion-proof enclosure. Controllers can be supplied "Dual Seal" certified to ANSI/ISA 12.27.01 standard meeting NEC & CEC secondary seal requirement.

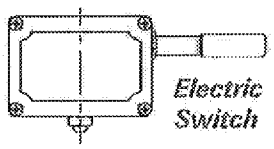

Electric Switch

* United States of America. Air and Radiation. Environmental Protection Agency. Lessons Learned From Natural Gas Star Partners: Options for Reducing Methane Emissions From Pneumatic Devices in the Natural Gas Industry. Appendix A. Washington, DC, 2003.

Force Balance Principle

Theory of Operation
The operation of the Series 1001, 1001A, and 1001XL Level Controllers is based on the Force Balance Principle. The ***Force Balance Principle*** states when an object is submerged in a liquid, it creates a buoyant force that is proportional to the weight of the liquid displaced. A Norriseal level controller uses a spring to balance the weight of a displacement-type element (displacer), eliminating the need for custom-weighted displacers and floats. As the displacer is immersed into the liquid, the amount of force available is proportional to the weight of the liquid displaced. The result of this force is transmitted to the controller by a rotational movement of the shaft. This rotational movement causes the fulcrum and lever (flapper bar) to push up the pilot thrust pin. The amount of force is proportional to the level on the displacer, creating a desired output signal. This desired output signal can be a pneumatic on/off signal using a snap pilot, a pneumatic modulating signal using a throttle pilot, or an electrical SPDT or DPDT signal by using an electric micro switch.

Controller Action
Controller action is "Direct Acting" when the output signal increases as the liquid level rises on the displacer. In "Reverse Acting," the output signal decreases as the liquid level increases on the displacer.

Proportional Band
Proportional Band or Span is the ratio of the displacer length used versus the total length of the displacer to achieve a desired output signal. For on/off control, the snap pilot output is equal to the supply pressure over the span of the controller. The span can be changed by sliding the fulcrum on the lever. Moving the fulcrum away from the pilot thrust pin increases the span, and moving the fulcrum towards the pilot decreases the span. For throttling control, the output will vary over the proportional band.

Function of the Adjustable Spring
Not only does the spring balance the weight of the displacer, it can also be adjusted to shift the setpoint on the displacer. With spring force held constant, a higher liquid level on the displacer produces a larger force available to the pilot. When the spring force is reduced by decompressing the spring, a higher liquid level on the displacer is required to produce the same force as before. Increasing the spring force by compressing the spring requires a lower liquid level for the same force. Thus, increasing/decreasing the spring force will change the setpoint accordingly.

The spring compression can be reduced further to a position where a hydrocarbon liquid level will not produce enough force to produce an output from the pilot. This makes the control of a ***liquid interface*** possible with the standard displacer. After the spring is adjusted so the lighter liquid will not operate the control, there is still adequate spring force in reserve for the liquid level of heavier liquid to provide enough force to actuate the pilot.

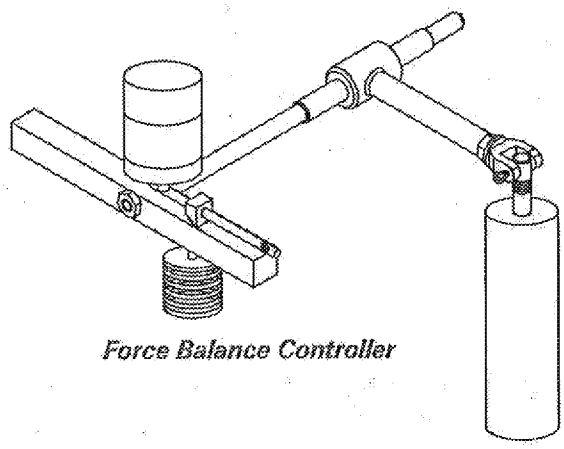

Force Balance Controller

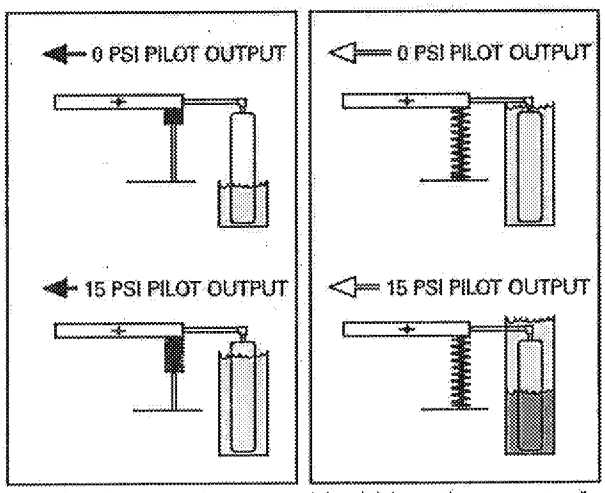

Top-level control *Liquid interface control*

Performance Characteristics

PNEUMATIC PILOTS

Output – Zero to Supply	
Proportional, throttle	3–15 psig, 6–30 psig
Differential gap, snap	0–20 psig, 0–30 psig
Differential gap, Envirosave™	0–20 psig, 0–30 psig
Supply Pressure Requirement*	
3–15 psig, 0–20 psig	20–30 psig (min.)
6–30 psig, 0–30 psig	35–40 psig (min.)
0–50 psig	60 psig (max.)
0–100 psig*	100 psig (max.)
Supply and Output Connection	¼ inch NPT Female
Ambient Temperature	-40° to 180°F (-40° to 82°C) -40° to 275°F (High temp) (-40° to 135°C)
Pilot Flow Capacity	
Throttle C_v	0.394
Snap C_v	0.282
Envirosave™ C_v	0.282
Proportional Band Adjustment (Recommended adjustment for a full output pressure change over a percent of sensing element)	
Throttle	20–150%
Snap	7–55%
Envirosave™	7–55%

*Gauges are standard 0-60 psi. Higher pressure gauges are available for an additional fee.

ELECTRIC ON/OFF SWITCH

Output	
Proportional band adjustment (Electric – micro switch)	
SPDT	7–55%
DPDT	20–150%
Switch Ratings	
SPDT	15 amps at 125, 250, or 480 V.A.C.
DPDT	10 amps at 125 V.A.C.
Certifications	
Explosion proof switch	UL and CSA listed Class I, Div. 1, Groups C&D Class II, Div. 1, Groups E, F, &G
Dual Seal	CSA listed Dual Seal, ANSI/ISA 12.27.01

GENERAL

Repeatability	1.0% of output span
Dead Band	5.0% of input span
Linearity	1.75% of output span
Ambient Temperature Effect on Setpoint	1.0% @ –40°F (–40°C) 3.0% @ +170°F (77°C)
Mechanical Disturbance Effects on Setpoint	1.0%
Specific Gravity	
Interface detection	0.035
Top level range	0.35 to 2.00
Temperature Limits Body process temperature (dependent on material selection)	–70° to +600°F (–57° to 316°C)
Process Pressure Rating	
Beveled - butt weld	To 6000 psig
Threaded (NPT)	To 6000 psig
Grooved	To 2500 psig
Flanged (RF & RTJ)	150 thru 2500 ANSI Class
Union w/sight glass	To 1500 psig
Ambient Temperature (A case extension is used for extreme temperatures or when body insulation is used.)	–40° to 160°F (–40° to 71°C)

Materials

PNEUMATIC PILOTS

Body	
Throttle	Aluminum w/Aluminum Seat
Snap	Aluminum w/Aluminum Seat
Envirosave™	Aluminum w/Elastomeric Seat
Gasket/diaphragm	Nitrile
Internal Valving	302 SST
Filter Element	40 Micron SST
Screws & Nuts	SST

ELECTRIC ON/OFF SWITCH

Micro-Switch Enclosure	Cast aluminum
Junction Box	Cast aluminum

GENERAL

Body - LLC	
1001/1001A	ASTM A696/A105 (std) -20 to +600°F (-29 to +316C°) ASTM A351 CF8M/A182 -70 to +600°F (-57 to +316C°)
1001XL	ASTM A216 WCC/A105 (std) -20 to +600°F (-29 to +316C°) ASTM A351 CF8M/A182 -70 to +600°F (-57 to +316C°)
Hammer Nut (where applicable)	ASTM A105
Sight Glass (For special DU/AU union body)	Acrylic -20 to +200°F (-29 to +93C°) Pyrex -20 to +400°F (-29 to +204C°)
Displacers	PVC -20 to +140°F (-29 to +60C°) Acrylic -20 to +200°F (-29 to +93C°) 316 SST -70 to +600°F (-57 to +316C°)
Displacer Arm	316 SST
Vertical Hanger (swivel for vertical displacer position)	316 SST
Chain	304 SST (for vertical extension and/or split displacer)
Shaft	316 SST -70 to +600°F (-57 to +316C°)
Bearing Blocks	316 SST -70 to +600°F (-57 to +316C°)
Bearings	440 SST -70 to +600°F (-57 to +316C°)
Shaft Seals	Nitrile -20 to +180°F (-29 to +82C°) Nitrile lo-temp -50 to +180°F (-46 to +82C°) Fluorocarbon -20 to +400°F (-29 to +204C°) Aflas -20 to +600°F (-29 to +316C°) EPR -50 to +250°F (-46 to +121C°)
Case & Cover	Die cast chromated aluminum with powder coat
Supply and Output Gauges	Brass (standard) 0-60 psig 316 SST 0-60 psig Brass liquid fill 0-60 psig 316 SST liquid fill 0-60 psig
Torque Bar	Aluminum (standard) 303 SST
Flapper Bar	303 SST
Spring Adjusting Knob	Aluminum (standard) 303 SST
Fulcrum	Nylon w/SST screw
Balancing Spring	Light-SST w/green marking Medium-SST w/no marking Heavy-SST w/yellow marking Extra Heavy-SST w/red marking

Note:
Materials that are certified compatible for NACE service are available upon request.

How to Order

Determine the model number. This specifies series and connection size; pilot type; left, right or back mount; pilot action; seals; and service condition.

Required Application Information:

A. Fluid media
B. Process temperature (maximum and minimum)
C. Process pressure
D. Vessel size and diameter (distance of connection from bottom of vessel, any obstructions that may hinder performance)
E. Body connection type, size, and rating
F. Displacer position (vertical or horizontal)
G. Controller mount (right or left) if applicable
H. Pilot action
I. Area electrical classification if applicable
J. Top level or interface

Right-Hand Mount vs. Left-Hand Mount
The Series 1001 and Series 1001A can be configured as right-hand mount or left-hand mount. The orientation of the displacer to the controller (while facing the front side of the controller) designates the mounting style. The mounting can be adjusted in the field. The Series 1001XL back-mount controller is utilized when neither right-hand or left-hand mounts are practical.

Electric Level Switch
The electric level switch uses the force balance principle to apply force to a standard Micro-switch.

Two standard switches are available, both with explosion-proof enclosures: single pole double throw (SPDT) or double pole double throw (DPDT). Rating for SPDT switch is 15 amps at 125, 250, or 480 volts A.C. The DPDT switch rating is 10 amps at 125 or 250 volts A.C.

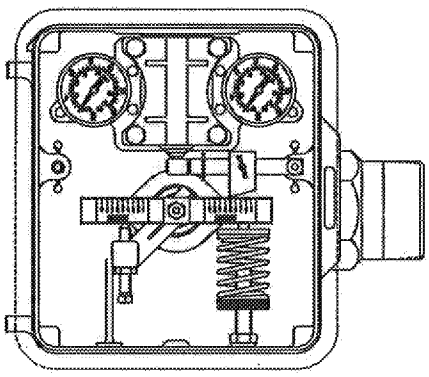

Right-Hand Mount

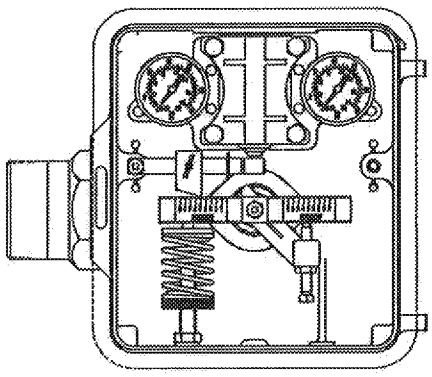

Left-Hand Mount

Model Code: Level Controllers

2SM60-SRDA-BG

END CONNECTIONS

Size	Code
1.50"	15
2.00"	2
3.00"	3
4.00"	4
6.00"	6

END CONNECTIONS

Type		Code
Beveled Slip-on		BS
Beveled Butt Weld Sch 40		B4
Beveled Butt Weld Sch 80		B8
Beveled Butt Weld Sch 160		B1
Beveled Butt Weld Sch XXH		BX
Grooved		GV
Flanged	Raised Face	RF
	Ring Type Joint	RJ
	Special 4 Bolt	SF
Screwed Male NPT		SM
Acme Union		AU
Dover Union (CEMCO)		DU

PRESSURE RATING

ANSI	Rating*	Code
150	285	02
300	740	07
600	1480	14
	1500	15
	2000	20
900	2200	21
	3000	30
1500	3750	36
2500	6170	60

*Unit pressure rating subject to selection of displacer (reference displacer chart below).

MATERIAL BODY/SHAFT/BLOCK

Body	Shaft	Bearing Block	Code
A696 CS or WCC	316	316	–
A696 CS (NACE)	316	316	N
316 (NACE)	316	316	R
316	316	316	S

PILOT MODE

Mode Type	Code
Electric DPDT (Ex-Proof)	D
Electric SPDT (Ex-Proof)	E
Electric SPDT (Ex-Proof) Dual Seal Certified	Y
Envirosave™ Snap (On/Off)	B
Pneumatic Snap (On/Off)	S
Pneumatic Throttle (Modulating)	T

NOTE:
Additional materials (not shown above) are available for extreme service conditions.

ENCLOSURE

Code	Type
A	Standard Case (1001 Only)
G	Weather-resistant Case Only
H	Weather-resistant Case and Piped Exhaust
J	Weather-resistant Case, Piped Exhaust and Special Marine Internals
K	Weather-resistant Case and Special Marine Internals

SERVICE CONDITION

Code	Service
B	Standard
C	Vibration

PRESSURE GAUGES

Code	Type
-	Bronze 0-60 psi (std)
K	316 SST 0-60 psi (1001A/1001XL)
M	Liquid Filled 0-60 psi (1001A/1001XL)

SEAL MATERIAL

CODE	Max.Temp. (°F)**	O-Ring
A	180	Buna
E	250	EPR
F	400	Viton
S	400	Aflas

**Unit temperature rating subject to selection of displacer. See displacer chart.

PILOT ACTION

Code	Pilot Action
D	Direct Acting
R	Reverse Acting

MOUNTING CASE

Code	Type Mounting
B	Back XL Only
L	Left Hand
R	Right Hand

DISPLACER CHART
DISPLACER TEMPERATURE/PRESSURE RATING

Material	Max Temp °F	Max Pressure (PSIG)
PVC	-20 to 140	6170
Acrylic	-20 to 200	6170
SST-2	-70 to 600	2000*

* Higher pressure SST displacers are available.

Dimensions

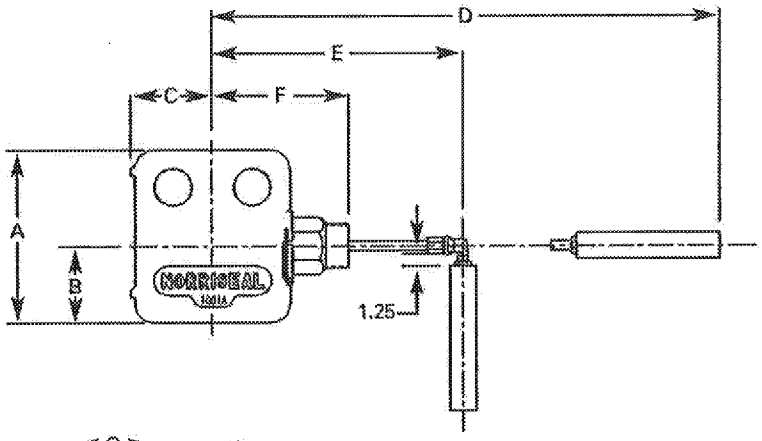

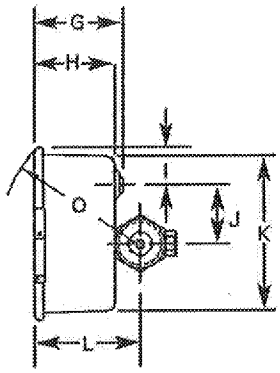

Side view of 1001A

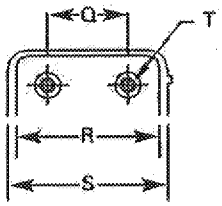

1001A/1001XL

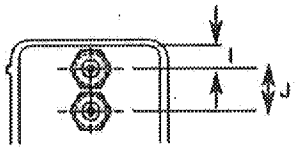

1001

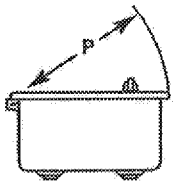

MODEL			
	1001	1001A	1001XL
A	7.68	8.74	8.74
B	3.00	3.85	3.00
C	4.09	4.13	4.13
D	24.43*	24.43*	24.44*
E	13.67*	13.67*	13.67*
F	*	*	*
G	3.12	4.36	4.36
H	2.75	3.95	3.95
I	0.90	1.90	1.90
J	1.00	2.98	2.98
K	7.68	7.98	7.98
L	4.00	5.19	–
O	6.00	7.13	–
P	7.75	7.85	7.85
Q	–	4.00	4.00
R	–	7.06	7.06
S	–	8.01	8.01
T	¼ NPT	¼ NPT	¼ NPT
U	4.75	4.87	5.16

* See page 9 for "F" dimension for different type of connections.

* Using standard 1.88 dia. X 12 inch displacer and 12.5 inch displacer arm. Length is dependent upon displacer arm and displacer.

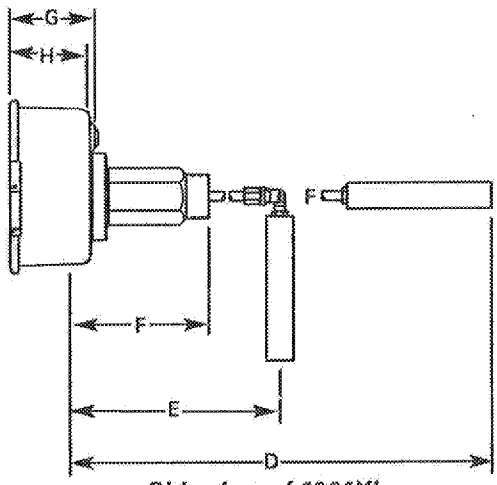

Side view of 1001XL

DIMENSIONS "F"

Body Styles X	Body Size			
	2.00	3.00	4.00	6.00
Beveled B/W SCH 40	6.00	–	–	–
SCH 80	6.00	–	–	–
SCH XXH	6.00	–	–	–
Beveled Slip-on	6.00	–	–	–
Screwed Male NPT	6.00	–	–	–
Grooved	6.00	6.88	6.94	7.00
Flanged - 4-bolt -special	6.89	–	–	–
-150 RF	6.50	6.56	6.56	8.75
-300 RF	6.81	6.75	6.88	9.19
-300 RTJ	7.06	7.00	7.25	9.25
-600 RF	7.19	7.13	7.50	10.13
-600 RTJ	7.25	7.31	7.56	10.19
-900 RF	8.00	9.63	10.13	10.56
-900 RTJ	8.06	9.69	10.19	10.63
-1500 RF	8.00	10.25	10.63	11.88
-1500 RTJ	8.06	10.31	10.69	11.94
-2500 RF	9.13	11.00	11.75	13.50
-2500 RTJ	9.19	11.13	11.94	13.75

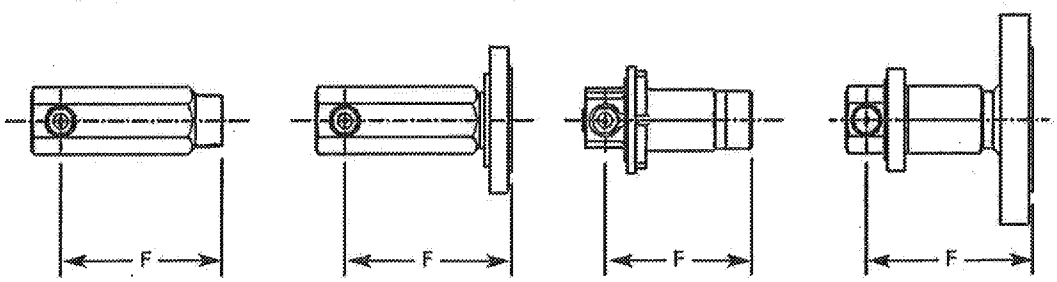

Series 1001 and 1001A

Series 1001XL

WEIGHTS

Body Styles X	Body Size			
	2.00	3.00	4.00	6.00
Beveled B/W SCH 40	17	NA	NA	NA
SCH 80	17	NA	NA	NA
SCH XXH	17	NA	NA	NA
Beveled Slip-on	18	NA	NA	NA
Screwed Male NPT	18	NA	NA	NA
Grooved	8	19	20	
Flanged - 4-bolt -special	26	NA	NA	
-150 RF	25	30	34	
-300 RF	27	35	45	
-300 RTJ	27	35	45	
-600 RF	29	37	55	
-600 RTJ	29	37	55	
-900 RF	40	51	75	
-900 RTJ	40	51	75	
-1500 RF	45	72	95	
-1500 RTJ	45	72	95	
-2500 RF	61	110	150	
-2500 RTJ	61	110	150	

Weights are for 1001. For 1001A add 1 lb. and for 1001XL add 2 lb.

Series 1006 Vertical Chambers

The Series 1001 and Series 1001A can be externally mounted using our Series 1006 vertical or horizontal external chambers. These external chambers provide more stable operation for vessels with internal obstruction or considerable internal turbulence.

FLANGED		NPT	
Style "AA"	Style "AB"	Style "EE"	Style "EF"
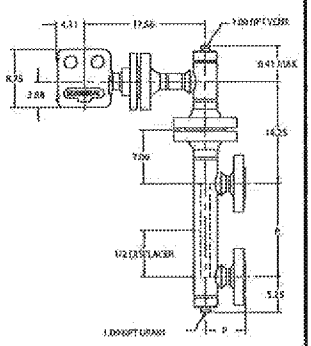	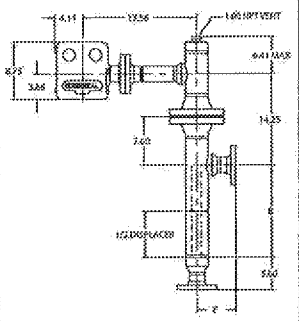	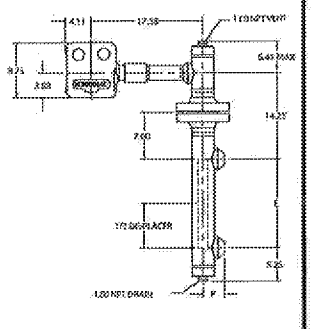	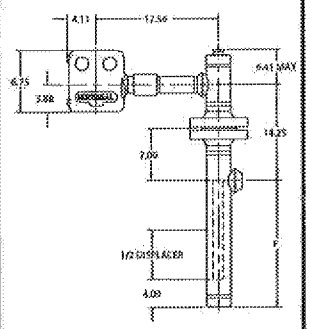
Style "CC"	Style "CD"	Style "GG"	Style "GH"
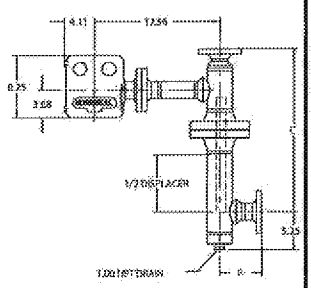	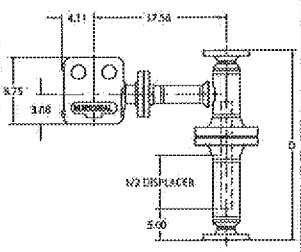	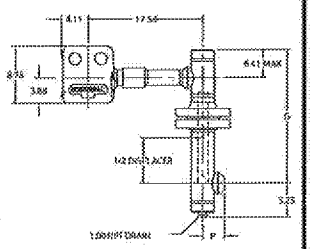	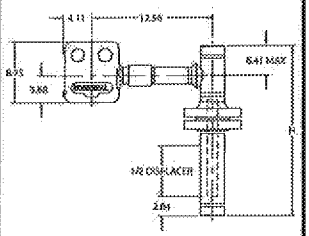
	Style "EA"		Style "AE"
	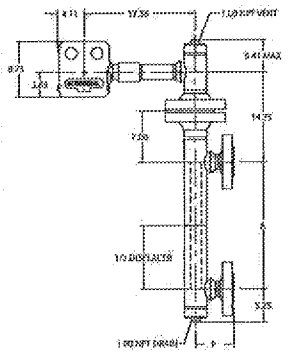		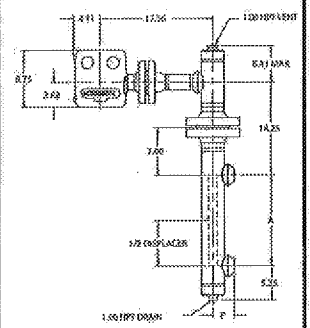

Other process connections available.

PROCESS CONNECTIONS DIMENSIONS (INCHES)				
Type	Style	Displacer	Dim**	Dim
Flanged	AA	14	A	14
		32		32
	AB	14	B	14
		32		37
	AE	14	E	14
		32		32
	CC	14	C	21
		32		39
	CD	14	D	26
		32		44
NPT	EA	14	A	14
		32		32
	EE	14	E	14
		32		32
	EF	14	F	18
		32		36
	GG	14	G	19
		32		37
	GH	14	H	23
		32		41

*Other displacer lengths available on request.
**Charted dimensions are for process connecting piping. All other dimensions may vary with respect to flange size and ANSI class.

PROCESS CONNECTIONS (INCHES)					
ANSI Class		DIM	150	300	600
3.00 x 1.50 flg	RF	P	5.62	5.88	6.19
	RTJ	P	5.88	5.62	6.19
3.00 x 2.0 flg	RF	P	5.88	6.12	6.50
	RTJ	P	6.12	6.44	6.56
4.00 x 1.50 flg	RF	P	6.12	6.38	6.69
	RTJ	P	6.38	6.62	6.69
4.00 x 2.0 flg	RF	P	6.38	6.62	7.00
	RTJ	P	6.62	6.94	7.06

NPT Size	DIM	1.0 in.	1.5 in.	2.0 in
3.00 x NPT	P	3.12	3.19	3.31
4.00 x NPT	P	3.62	3.69	3.81

Position of Process Connections

The following diagram illustrates the location of the process connections and level controller relative to Position 1 (P1) which is zero. Refer to Model Code, Position Process Connection on page 13.

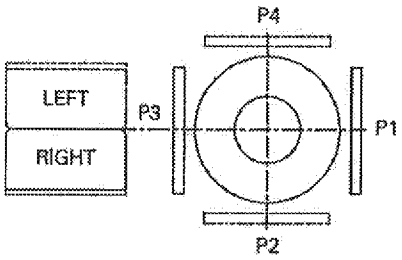

Level Controller

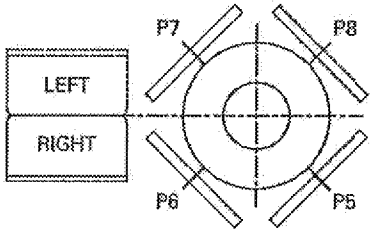

Level Controller

Series 1006D Dome

To specify a dome only (this is the top of the vertical chamber), add a suffix letter 'D' to the end of the Series Number. Refer to the Model Code, Vertical Dome Style on page 13.

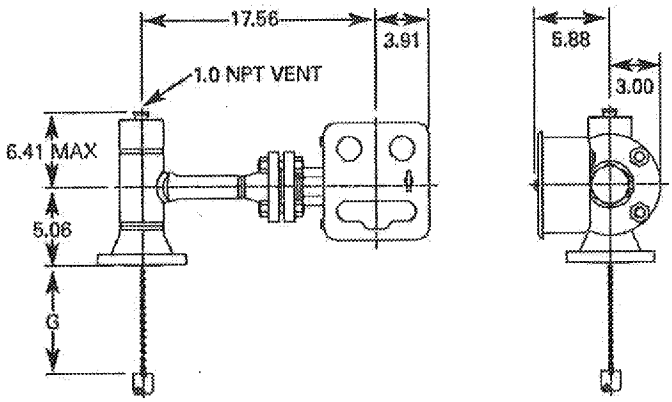

Note: Standard chain extension is 12". Longer chains available on request.

Series 1006 Horizontal Chamber

(For Model Code, refer to page 14)

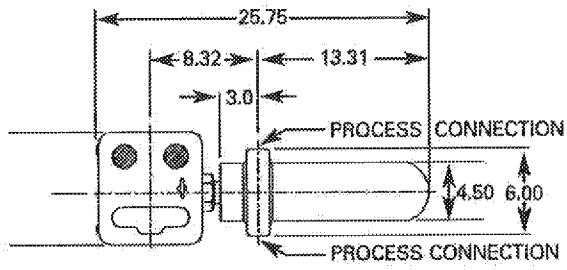

Typical NPT Level Controller & Chamber (Flanged configuration available)

Model Code: Vertical Chambers and Domes

The following model codes apply to the Series 1006 Vertical Chamber and Dome and to the Series 1006D only.

3AA14-20RF 14-P1

CHAMBER/DOME PIPE SIZE

Description	Code
3.00" (Std.)	3
4.00"	4

VERTICAL DOME STYLE

Description	Code
Flanged LLC w/NPT Vent	A
Flanged LLC w/top Flanged Process Conn	C
Screwed LLC w/NPT Vent	E
Screwed LLC w/Top NPT Process Conn	G

VERTICAL CHAMBER STYLE

Type Process Connection	Type Level Control Connection	Process Connection Mounting Style	Code
Flanged	See Dome	Side Top-Side Btm	A
Flanged	See Dome	Side Top-Btm	B
Flanged	See Dome	None-Side Btm	C
Flanged	See Dome	None-Btm	D
Screwed	See Dome	Side Top-Side Btm	E
Screwed	See Dome	Side Top-Btm	F
Screwed	See Dome	None-Side Btm	G
Screwed	See Dome	None-Btm	H
1006 Dome Only			O

DISPLACER LENGTH

Description	Code
14.00 Inch	14
32.00 Inch	32
48.00 Inch	48
60.00 Inch	60
Dome Only	0

DOME/CHAMBER MATERIAL

Description	Code
Carbon Steel A105	–
Carbon Steel - NACE, A105/A106	N
316L Stainless Steel - X-Ray NACE	R
316L NACE	W
316 Stainless Steel	S

PROCESS CONNECTION

Description	Code
1.00 Inch	10
1.50 Inch	15
2.00 Inch	20
3.00 Inch	30
4.00 Inch	40

NOTES:
- Controller-to-chamber connection is always 2 in.
- Standard vent and drain connections are 1 in. NPT.
- Additional materials (not shown above) are available for extreme service conditions.

POSITION PROCESS CONNECTION

Code	Description
P1	0 Degrees w/LLC at 180 Degrees
P2	90 Degrees w/LLC at 180 Degrees
P3	180 Degrees w/LLC at 180 Degrees
P4	270 Degrees w/LLC at 180 Degrees
P5	45 Degrees w/LLC at 180 Degrees
P6	135 Degrees w/LLC at 180 Degrees
P7	225 Degrees w/LLC at 180 Degrees
P8	315 Degrees w/LLC at 180 Degrees

STUD & GASKET MATERIAL

Code	Stud/Nut	Gasket	
		RF or FF	RJ
-	ASTM A193-B7/ ASTM A194-2H	316L/GRF CSTL GR	CSTL Solid
A	ASTM A193-B8M/ ASTM A194-8M	316L/GRF CSTL GR	316 SS Solid
B	ASTM A193-B7/ ASTM A194-2H	316L/GRF 316SS GR	316 SS Solid
C	ASTM A193-B7/ ASTM A194-2H	INC/GRF CSTL GR	–
D	ASTM A193-B8M/ ASTM A194-SS8M	316L/GRF 316SS GR	316 SS Solid
L	ASTM A193-B7M/ ASTM A194-2HM	INC/GRF 316SS GR	316 SS Solid
M	ASTM B164/ Monel 400	MON/GRF 316SS GR	–

RATING PROCESS CONNECTION

Code	Description	
02	Flanged (ANSI)	150
07		300
14		600
21		900
36		1500
14	NPT (WP)	1480

NOTE:
1. Flanged-LLC & dome/chamber connection rated same as process connection (except ANSI 150 Class). Dome/chamber connection is ANSI 300.
2. Threaded-dome/chamber connection is ANSI 600 class; higher pressure classes available.

TYPE PROCESS CONNECTION

Code	Description
RF	Flanged - RF (Raised Face)
RJ	Flanged - RJ (Ring Type Joint)
SC	Screwed Female
SM	Screwed Male

NOTE:
Specify when gauge glass connections are required. Give size, position, and center-to-center dimensions.

Model Code: Horizontal Chambers

4 V 12-10SC 30

CHAMBER PIPE SIZE

Description	Code
4.00"	4.0

RATING PROCESS CONNECTION

Code	Description	
30	*NPT (WP)	3000

*Standard. Higher pressures available on application

HORIZONTAL CHAMBER STYLE

Type Process Connection	Type Level Control Connection	Process Connection Mounting Style	Code
Screwed	Flanged	Top-Bottom	L
Screwed	Screwed	Top-Bottom	V

Please note: not all available options are shown. Consult factory for additional configurations.

TYPE PROCESS CONNECTION

Code	Description
RF	Flanged - RF (Raised Face)
RJ	Flanged - RJ (Ring Type Joint)
SC	Screwed Female

DISPLACER LENGTH

Description	Code
12.00 Inch	12

PROCESS CONNECTION

Code	Description
10	1.00 Inch

CHAMBER MATERIAL

Description	Code
Carbon Steel A105/A106	–
Carbon Steel - NACE, A105/A106	N
316 Stainless Steel	S
316 L Stainless Steel - X-Ray NACE	W

NOTES:
- Controller-to-chamber connection is always 2 in.
- Additional materials (not shown above) are available for extreme service conditions.

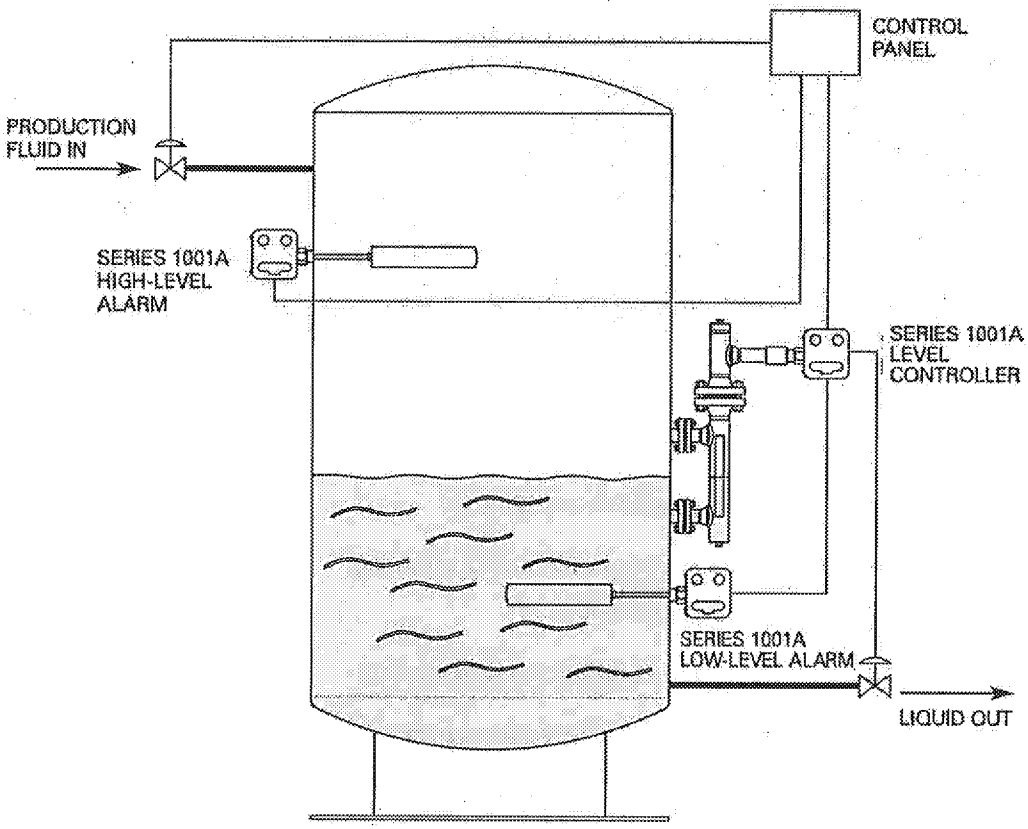

Common Applications

1. Custody Transfer Measurement Systems
2. Separators
3. Dehydrators
4. Heater Treaters
5. Well Test Systems
6. Interface Detection
7. Compressor Scrubbers
8. Offshore Production Facilities

Why you can depend on genuine Norriseal products

- In-house engineering and technical support
- In-depth applications experience
- Award-winning innovation and ongoing product development
- ISO 9001:2008 certified manufacturing
- Over five decades of industry service
- Compliance with all industry standards and specifications
- Responsive service and prompt delivery
- Field support available worldwide

Please contact your Norriseal representative for more details and assistance in specifying the optimal solution for your application.

NORRISEAL™ A DOVER COMPANY

Engineered Performance

Tel: 713·466·3552
Fax: 713·896·7386
www.norriseal.com

In Canada contact:

ALBERTA OIL TOOL A DOVER COMPANY

Tel: (780) 434-8566
Fax: (780) 434-4267
www.albertaoiltool.com

©2014 Dover Corporation/Norriseal and its affiliates. This manual, including all text and images, is a copyrighted work of Dover Corporation/Norriseal and its affiliates. It may not be, in whole or in part, photocopied, scanned, or otherwise reproduced, revised, or publicly displayed, without prior written permission from Norriseal. This manual is for use only with the new Norriseal valves and/or controllers listed in the manual. It may not be distributed with, and is not for use with, any remanufactured products.

Due to the continuous improvement program at Norriseal, specifications and/or prices are subject to change without notice or obligation.

Envirosave is a mark of Norriseal, A Dover Company. All other trademarks contained herein are the property of their respective owners.

0LLC-1214T