California Water Boards

Edmund G. Brown Jr. Governor

Matthew Rodriquez Secretary for Environmental Protection

Lahontan Regional Water Quality Control Board

March 23, 2015

Don Gronstal
BRAC Environmental Coordinator
AFCEC/CIBW
3411 Olson Street
McClellan, CA 95652-1003

DRAFT NON-CERCLA SITE OT071 CORRECTIVE ACTION PLAN FOR PESTICIDES IN GROUND WATER, GEORGE AIR FORCE BASE, VICTORVILLE, SAN BERNARDINO COUNTY

The California Regional Water Quality Control Board, Lahontan Region (Water Board) received and reviewed responses to comments (RTCs) on the Draft Non-CERCLA Site OT071 Corrective Action Plan (CAP) for Pesticides in Ground Water at the former George Air Force Base (GAFB). Staff responses and additional comments are shown in blue text in the enclosed table.

Based on review of the RTCs and CAP, a number of data gaps are identified. These data gaps need to be filled before the appropriate remedial alternative for Site OT071 can be selected. We cannot accept the CAP based on current uncertainties at the site and request that the data gaps be addressed prior to further remedy evaluation. We request that the Air Force prepare a work plan for the collection of the requested data, and the work plan be submitted to staff for approval prior to data collection as described further in our enclosed comments.

You may contact me at (760) 241-7340, Todd.Battey@waterboards.ca.gov, or Cindi Mitton (760) 241-7413 CMitton@waterboards.ca.gov, if you have any questions regarding this letter.

Todd Battey, PG
Engineering Geologist

Enclosure:
1) Comment response table dated March 23, 2015
2) Overall Site [Land Use] Plan of the Southern California Logistics Airport dated December 5, 2006

cc w/Encl: Mail List

MAIL LIST

Mary Aycock, USEPA, Region IX
Calvin Cox, CNGS
Nancy Barnes, MWH Inc.
Gilbert Dimidjian, MWH Inc.
Susan Soloyanis, Sologeo, LLC, (email only)
Keith Metzler, City of Victorville, SCLA
Eric Ray, City of Victorville, SCLA
Steve Ashton, City of Victorville, Public Works
Logan Olds, VVWRA
Tom Thornton, City of Adelanto, Operations
Anna Garcia, Mojave Water Agency

R:\RB6\RB6Victorville\Shared\Units\CINDI UNIT\Todd\GAFB\OT071 – Dieldrin\Comment Cover Ltr on AF Cmts on Draft PestCAP_v5.doc

WATER BOARD RESPONSES (MARCH 23, 2015) TO AIR FORCE RESPONSES (JANUARY 13, 2013) TO WATER BOARD TECHNICAL REVIEW COMMENTS (SEPTEMBER 13, 2013) ON DRAFT NON-CERCLA OT071 CORRECTIVE ACTION PLAN FOR PESTICIDES IN GROUND WATER, FORMER GEORGE AIR FORCE BASE, VICTORVILLE, SAN BERNARDINO COUNTY, CA (ISSUED JUNE 24, 2011)

Comment #	Section/Page/Comment	Response:
General Comment 1	**The Lahontan Regional Water Quality Control Board (Water Board) General Comments** The U.S. Air Force (Air Force) and US Environmental Protection Agency (USEPA) have determined that the contamination at Site OT071 (Site) is the result of the legal, albeit excessive, application of pesticide products; therefore, pesticide contamination at the Site is exempt from CERCLA. Consequently, the USEPA is not involved at the Site and the Water Board, as the lead regulatory agency, is responsible for protecting human health, the environment, and water quality. According to Section 1.0, the report's stated purpose is to evaluate corrective actions for "pesticide-impacted ground water." The report does not discuss the nature and extent of pesticide contamination in soils, evaluate the potential risk to human health and the environment from contaminated soil, or evaluate potential impacts to surface water. Section 2.1.1 refers to a 2002 risk assessment that was done. The report states that the occupational risk may have been	This pesticides corrective action plan ("PCAP") deals solely with the corrective action for pesticides in the groundwater. So the stated purpose in Section 1.0 is correct. The Air Force (AF) will develop and select a remedy for this plume in close coordination with the RWQCB. Many of the RWQCB's comments primarily relate to alleged or potential deficiencies in addressing pesticides in soils. The BRAC Cleanup Team agreed much earlier that pesticides in soil were not an environmental condition that required any additional investigation/evaluation/analysis and were sufficiently addressed in the 2007/2008 timeframe. This was around the time that the AF disposed of former base housing/golf course parcel by deed. Thus, the scope of this PCAP is limited to corrective action for groundwater. The pesticides found in some of the soils at the former George AFB (GAFB) have never been the subject of a response action under the CERCLA/NCP framework. There were landfills (i.e., known pesticide "disposal" sites) (DP-02 and DP-04) investigated/evaluated/analyzed and ultimately addressed in the Operable Unit (OU) 3 soils ROD. The

ED_003054_00000132-00003

Comment #	Section/Page/Comment	Response:
	underestimated and that the risk from contamination under buildings was not evaluated. The Air Force must evaluate all exposure routes for the site-related contamination and real or threatened impacts to surface water. If the potential threats to human health, the environment, and surface water are being addressed separately from groundwater contamination, this process should be summarized in the CAP. Please note, the California Office of Environmental Health Hazard Assessment (OEHHA) provides technical support to the Water Board on issues involving risk assessment. OEHHA's support requires interagency coordination, which necessitate appropriate planning and coordination between the Air Force, the Water Board, and OEHHA. Therefore, the Air Force should initiate a discussion of the risk assessment process and requirements as soon as possible.	former OU4 included Building 513, where pesticides had been handled. This site was investigated and closed with No Response Action planned. The parties to the FFA concurred with this proposal for Building 513. The ROD for OU3 did not require further investigation, evaluation, analysis or remedy for any pesticide soil sites that were not disposal sites or landfills. The OU3 ROD did not propose or select any response actions for dieldrin in soils. With respect to pesticides discovered in the former base housing area, the AF determined that the presence of pesticides in the soils was not the result of an actionable "release," but rather the result of application pursuant to the Federal Insecticide, Fungicide and Rodenticide Act (FIFRA – 7 U.S.C. § 136, et seq.) of a registered pesticide known as dieldrin. Consequently, there has never been any response action taken with respect to dieldrin in soils at the former GAFB. However, in 1993, dieldrin was first identified as a potential contaminant of concern in the groundwater beneath the former base housing/golf course areas. Dieldrin's presence in groundwater is explained by the conceptual site model (CSM) for the former base housing/golf course parcel. Other CSMs were evaluated. Investigations including surface, subslab, and soil boring sampling were conducted; the pre-construction application of termiticide in the housing area, followed by additional foundation applications and accompanied by intensive landscape irrigation best fits the observed distribution of dieldrin. In soil and ground water. Watering of the landscaping in and around the former housing area and leakage from the unlined pond on the former

ED_003054_00000132-00004

Comment #	Section/Page/Comment	Response:
		golf course flushed the mobile fraction of dieldrin out of the soils and into groundwater. Irrigation has ceased and the golf course pond has been lined, so the remaining dieldrin in the soils is not leaching to groundwater. No additional periodic application of dieldrin around the perimeters of foundations in the former base housing area occurred after 1987, when all uses of dieldrin were banned in the United States. (The application of dieldrin most likely ended much earlier, around 1970 [see attached Table 2-1 of the PCAP]). The AF began prepared a Finding of Suitability to Transfer (FOST), which is based upon the OU3 ROD, covering the former base housing/golf course parcel in early 2007. There were differing views expressed in the FOST relating to how to properly characterize and address the presence of dieldrin, both in the soils and groundwater, "agree to disagree language" reflecting the AF's, the RWQCB's and U.S. EPA's differing positions was prepared and inserted into the FOST (pages 12-14). The AF agreed that the parcel would be designated as an "environmental condition category" (ECC) 3, which is land areas where there may have been a release, disposal, or migration, but where no response action is required. The AF agreed to insert the normal 42 U.S.C. § 9620(h)(3)(A) covenants in its federal deed. Also, the AF agreed to impose certain institutional controls (ICs) in the form of proprietary controls by inserting environmental restrictive covenants (ERCs) in its deed to address concerns with dieldrin in soils. Ultimately, the Grantee/local redevelopment authority (LRA) assumed liability and responsibility for the proper

ED_003054_00000132-00005

Comment #	Section/Page/Comment	Response:
		management/disposal of pesticides in the soils that are "released" or become "wastes" pursuant to CERCLA/RCRA during any subsequent redevelopment efforts, when redevelopment of the parcel takes place. The planned reuse of the parcel and the associated redevelopment efforts were considered by the AF and regulators in the context of approving the FOST. The deed contained ERCs to preclude inconsistent reuse/redevelopment. There is also an IC in the form of a governmental control (i.e., zoning), which precludes inconsistent reuse/redevelopment. Worker safety/occupational exposure were also addressed in the deed. At the time that the FOST was finalized, it was stated that any further risk analysis posed by dieldrin in soils would be of limited value in light of the allowable reuse/redevelopment. All parties to the FFA eventually agreed that with these changes to the FOST and insertion of this language into the deed, these measures were sufficient to address any concern over dieldrin remaining in the soils. The former base housing/golf course parcel was transferred by AF deed in September 2007 with the necessary ERCs. Since the flushing of dieldrin from soil where this pesticide was properly applied has resulted in migration to groundwater and a resultant dieldrin plume, the AF is responsible for and is committed to proposing and selecting a corrective action for dieldrin in groundwater. This response to General Comment #1 generally addresses some of the concerns stated in Specific Comments 10, 17, 18, and 19 below or at least provides the basis for the AF's responses to these Specific

ED_003054_00000132-00006

Comment #	Section/Page/Comment	Response:
	The Air Force response is noted. The following points are relevant to the Air Force's response to General Comment 1. A) Sampling results from the former housing area indicate that concentrations of dieldrin in soil are above risk-based screening levels such as USEPA's Regional Screening Levels. Cumulative human health risk from all detected pesticides has not been evaluated for this area. A requirement exists for future work at the site to evaluate these unknowns and prepare a health and safety plan to adequately implement necessary controls and practices to protect workers from exposure to the pesticide contamination. B) The former residential area has now been transferred to the Southern California Logistics Airport Authority (SCLAA) of Victorville and the deed states that "any additional remedial action found to be necessary after the date of this Deed for contamination on the Property existing prior to the date of this Deed will be conducted by the United States." C) The persistence of the groundwater mound located near the golf course pond indicates ongoing infiltration that may continue to further impact groundwater. Nonetheless, the Water Board understands that the Draft PCAP was prepared to address pesticides in groundwater. Future versions of the PCAP need to more thoroughly address threats to groundwater as described below.	Comments.
	The following additional general comments from the Water Board are based on a review of current data	

ED_003054_00000132-00007

Comment #	Section/Page/Comment	Response:
	and information for the site.	
General Comment 2	The Water Board cannot accept the remedy proposed in the Draft PCAP because additional data is required to select the appropriate remedial action for pesticides in groundwater at Site OT071 as further discussed in the following general comments. We request this information be developed prior to further remedy evaluation. The collection of the requested information will require the development of a work plan to address the data gaps described below, the completion of the associated field work, and the incorporation of the new data into a revised Draft PCAP. We request that the Air Force provide a schedule in the response to this comment for the data gap work plan.	
General Comment 3	The Upper Aquifer groundwater plume has not been fully delineated A) in the northeastern portion of the plume in the area where the highest dieldrin concentrations have been detected and B) in the southeast portion of the plume where dieldrin was detected above the notification level at monitoring well MW-149 located on Shay Road upgradient of the Adelanto water supply wells. The Lower Aquifer has not been fully delineated in the southern portion of the plume. These data gaps need to be resolved before selecting the remedial alternative for Site OT071 and we request they be addressed in the work plan initially requested in General Comment 2.	
General Comment	The potential for continued transport of dieldrin from the vadose zone to the Upper Aquifer cannot be	

ED_003054_00000132-00008

Comment #	Section/Page/Comment	Response:
4	fully evaluated with the existing data. The persistence of the groundwater mound in the Upper Aquifer in the vicinity of the golf course pond indicates that infiltration through the vadose zone continues even after the pond was lined and landscape irrigation was discontinued in the former housing area. The lack of vertical characterization of dieldrin in the vadoze zone below surface detections at the former housing area represents another data gap that needs to be resolved before selecting the remedial alternative for Site OT071. Near surface soil sampling in 2006 detected concentrations at the former housing area up to 15 mg/kg, which is 3 orders of magnitude above the current residential Regional Screening Level (RSL) of 0.033 mg/kg and two orders of magnitude above the current industrial RSL of 0.2 mg/kg. The Draft PCAP documents that dieldrin has leached through the 150-foot thick vadose zone to impact the Upper Aquifer. Soil data is required to document the vertical profile of dieldrin in the vadoze zone that may continue to leach into groundwater and add to the plume. The collection of additional soil samples to determine the vertical profile of dieldrin in the vadose zone below the previously documented locations of dieldrin in near surface soils is required. We request this vadose zone characterization be addressed in the work plan initially requested in General Comment 2.	
General Comment 5	The persistence of the large groundwater mound located near monitoring well NZ-120 indicates an	

ED_003054_00000132-00009

Comment #	Section/Page/Comment	Response:
	ongoing source of infiltration water that may A) continue to drive dieldrin downward through the vadose zone to the Upper Aquifer; B) cause the lateral spread of the dieldrin plume in the Upper Aquifer; and C) drive dieldrin further downward from the Upper Aquifer to the Lower Aquifer. According to the 2014 groundwater level monitoring, the mound is approximately 40 feet tall. Based on reasonable assumptions regarding the hydraulic parameters of the vadose zone, the mound should decay rapidly over no more than a few days once the source of the infiltrating water is shut off. The persistence of the mound for years indicates that the recharge is still occurring. If the pond is no longer used, then there may be a leak in a water line, either the sewer, the reclaimed water line, freshwater line, or fire hydrant line near the top of the mound. We request an investigation into the source of the infiltrating water at the mound and recommend that this investigation be included in the work plan initially requested in General Comment 2.	
General Comment 6	Multiple rounds of groundwater data have been collected since the Draft Site OT071 CAP was issue in June 2011. In the case of well MW-147, the dieldrin concentration in the Lower Aquifer has increased by a factor of over 3 times (from 0.016 to 0.052 µg/L) indicating continued input of dieldrin to the Lower Aquifer. The revised Draft CAP needs to include the most recent groundwater data that is available and evaluate concentration trends in the Upper and Lower Aquifers based on all available	

ED_003054_00000132-00010

Comment #	Section/Page/Comment	Response:
	data over time.	
General Comment 7	The PCAP needs to include an evaluation of cumulative risk to human health and the environment based on exposure to all existing contaminants detected in groundwater (not just dieldrin). The discussion of risk from groundwater cannot be limited to existing water supply wells, as discussed briefly in the CAP. The CAP needs to be revised to include or reference a risk assessment.	
General Comment 8	The evaluation criteria introduced in Section 3.1 and discussed in subsequent sections is too simplified to effectively determine the preferred alternative. The criteria included in the Draft CAP are limited to effectiveness, implementability, and cost. The time to reach the Corrective Action Objectives is not adequately addressed in the Screening of Remedial Technologies (Section 3.3) or in the Detailed Evaluation of Corrective Action Alternatives. The cleanup timeframe needs to be further discussed in the evaluation of alternatives, either as additional criteria (e.g., long-term effectiveness and short-term effectiveness) or systematically discussed within the effectiveness criteria. The compliance with Applicable or Relevant and Appropriate Requirements (ARARs) needs to be added as an evaluation criterion to ensure that all regulatory requirements are adequately addressed during the evaluation of corrective action alternatives. We request the evaluation criteria be revised and the evaluation of alternatives be redone with revised criteria.	

ED_003054_00000132-00011

Comment #	Section/Page/Comment	Response:
General Comment 9	The uncertainty in the degradation rates for dieldrin led to various modeling scenarios that predict dieldrin will persist in groundwater above the California Department of Public Health (CDPH) advisory level for somewhere between 30 years to more than 500 years. This uncertainty in the cleanup timeframe is unacceptably large and the upper end of this time range is not a reasonable timeframe for cleanup considering the proximity to existing water supply wells and other offbase areas of the aquifer where future water supply wells may be installed. As discussed in Specific Comment 16, site specific evaluations should be conducted to refine the degredation rate and the corresponding time to achieve cleanup goals. We request that these site specific evaluations be addressed in the work plan initially requested in General Comment 2. A more aggressive remediation strategy may be required to address site conditions.	
General Comment 10	The CAP proposes in Sections 4.1.2 and 4.1.3 that a Water Supply Contingency Plan will be developed to specify actions that the Air Force will take to protect human health if dieldrin or other pesticides are detected above health-based notification levels at water supply wells and that this plan may specify wellhead treatment to address this situation. The Water Board strongly disagrees that the existing water supply wells are the appropriate compliance point for additional actions; instead, the detection of one or more contaminants above notification levels at a sentinel would be the appropriate trigger for	

ED_003054_00000132-00012

Comment #	Section/Page/Comment	Response:
	additional actions to protect existing beneficial uses of the aquifer. Furthermore, active remediation and/or hydrologic containment may necessary to protect beneficial uses including if an exceedance is detected at a sentinel well.	
General Comment 11	The Water Board recommends that the Air Force prepare an Institutional Control Implementation and Assurance Plan (ICIAP) following USEPA guidance available at http://www.epa.gov/superfund/policy/ic/guide/ICIAP%20guidance%20(FINAL)%20-%2012.04.2012.pdf. The ICIAP will provide documentation that the current and future institutional controls are being implemented. The ICIAP could be done during the Remedial Design phase.	
General Comment 12	Dieldrin extending offsite east of the former GAFB property line (General Comment 3) is of particular concern because it is not covered by any existing Air Force land use controls – a property owner to the east could install a water supply well in the future and be exposed to dieldrin-contaminated groundwater. The southeast portion of the dieldrin-impacted Upper Aquifer that extends east of Shay Road to near the Adelanto water supply wells and possibly the northeastern portion of the plume (dieldrin extent not yet defined) may require a different remediation strategy. These areas need to be further defined before the PCAP is finalized.	
Specific Comment 1	**Section 1.1 Page 1-2** – The last paragraph of this section states that recommendations regarding corrective actions or closure are based on	The text will be revised to reference Table 2-2 of the CAP (attached).

ED_003054_00000132-00013

Comment #	Section/Page/Comment	Response:
	groundwater exceeding the screening risk levels. Include a reference to where these "screening risk levels" are listed. RWQCB Response: Response to comment accepted.	
Specific Comment 2	**Section 1.1 Page 1-2** – The last paragraph includes a list of the criteria to determine if sites have "acceptable risk." Revise the text so that it specifies how these criteria relate, i.e., are these either/or criteria or do all criteria apply. RWQCB Response: Response to comment accepted. The PCAP must also evaluate the total cumulative human health risk for all groundwater contaminants, not just dieldrin, as mentioned in General Comment 7. Additional potential vadose zone sources to groundwater contamination need to be addressed as described in General Comment 4 and Specific Comment 40.	The text will be revised to state that "*Sites are considered to have acceptable risks if* ***all of*** *the following can be demonstrated:*"
Specific Comment 3	**Section 1.1 Page 1-2** – The third bulleted item appears to describe two criteria: "Impacts to groundwater are stable and do not increase the time required for existing contaminated ground water to be restored to the water quality objective (WQO)." Staff has the following comments on this item: a. The first portion of the sentence should include a reference to the portion of the text that describes how stability will be determined.	a. The Air Force has performed trend analyses on the data used for the time series plots to verify the discussion in Section 2.2.6, Subsection "Dieldrin Stability in Ground Water" (See item 11 and Attachment A for a description of the trend analyses). The text of bullet #3 will be revised to reference "Stability" as defined in Section 2.2.6.as follows: "*3. Impacts to ground water are stable (no increasing concentrations, as defined by trend analyses similar to those performed in Section 2.2.6).*"

ED_003054_00000132-00014

Comment #	Section/Page/Comment	Response:
	b. It is not clear what the subject is for the second portion of the sentence regarding groundwater restoration. Revise for clarity. c. The sentence should reference where the WQO is specified. d. This item appears to include two, independent criteria. Each independent criteria should be listed as a stand-alone criterion. RWQCB Response: a. Response accepted. b. Response accepted. c. We recommend retaining the "water quality objective" (WQO) terminology instead of switching to the term "screening criterion." We agree with specifying the WQO as 0.002 µg/L. We suggest stating that the practical quantifiable limit (PQL) of 0.002 µg/L will be used as the WQO. Note that the PQL is used	The text in Subsection "Dieldrin Stability in Ground Water" will be revised as described in the response to Item #11. b. The second half of the sentence has been separated from bullet #3 as described in response to comment "d" below. c. See the response to bullet number "d". The 0.002 µ/L criteria is a screening criterion as described in "a" above. Therefore, the requirement in "d" will be called out as a "screening criterion". d. The second half of the sentence has been converted into a 4th requirement; the sentence will be titled " *#4, and will state "Impacts to ground water do not increase the time required for existing contaminated ground water to be restored to the water quality screening criterion of 0.002 ug/L dieldrin."*

ED_003054_00000132-00015

Comment #	Section/Page/Comment	Response:
	in Section 2.2.8 (Ground Water Modeling) and Appendix F (Ground Water Modeling Report), which is why we recommend using that term instead of the equivalent term "reporting limit." d. We agree with the first part of the proposed criterion and recommend revising the wording as follows: "Impacts to ground water do not increase the time required for the contaminated ground water to be restored to the water quality objective. The practical quantifiable limit (PQL) of 0.002 µg/L will be used as the water quality objective."	
Specific Comment 4	**Section 1.3 Page 1-3** – The second paragraph on this page states that the Water Quality Control Plan for the Lahontan Region (Basin Plan) "considers the Upper Aquifer as having the potential for municipal beneficial use and the Lower Aquifer as a drinking water supply." This statement does not accurately reflect the relevant contents of the Basin Plan, i.e., beneficial uses. The Basin Plan designates potential and present beneficial uses for all groundwaters of the Lower Mojave River Basin as municipal, agricultural, industrial, freshwater replenishment, and aquaculture. The Basin Plan does not differentiate between specific saturated zones within the groundwater basin. The municipal beneficial use includes municipal and domestic water supplies. Revise the text accordingly. RWQCB Response: Response accepted.	The sentence will be revised to state: *"The Water Quality Control Plan for the Lahontan Region (RWQCB, 2005) designates potential and present beneficial uses for all ground waters of the Lower Mojave River Basin as municipal, agricultural, industrial, freshwater replenishment, and aquaculture.*

ED_003054_00000132-00016

Comment #	Section/Page/Comment	Response:
Specific Comment 5	**Section 1.3 Page 1-3** – The second paragraph of this section references two "regulations" that apply to the CAP. This list should include the following California State laws, policies and regulations that apply to groundwater cleanup: • State Water Resources Control Board (State Water Board) Resolution 68-16 *(Statement of Policy with Respect to Maintaining High Quality of Waters in California);* • State Water Board Resolution 88-63 *(Sources of Drinking Water Policy);* • State Water Board Resolution 92-49 *(Policies and Procedures for Investigation and Cleanup and Abatement of Discharges Under Water Code Section 13304);* • California Water Code *(Porter-Cologne Water Quality Control Act);* • Basin Plan *(Water Quality Control Plan for the Lahontan Region).* The CAP lists a "RWQCB's Non-Degradation Policy" as a regulation. This reference is probably to the State Water Board Resolution 68-16 (first bulleted item above), which is sometimes referred to as the Anti-Degradation Policy. Please include the correct reference to the State Water Board Resolution 68-16. The second item listed as a regulation in this section is California Department of Public Health	Section 1.3 will be replaced with the following: *The corrective actions presented in this CAP that apply to the pesticide-impacted ground water at GAFB have been developed to comply with the substantive requirements of California State laws, policies and regulations presented herein.* *Site OT071 was administratively removed from the CERCLA program and the Air Force has been voluntarily monitoring and reporting pesticides in ground water. The chemical of concern (COC) identified in Section 2 is the pesticide dieldrin in ground water. The CDPH recommends that any water source with dieldrin concentrations exceeding 0.2 µg/L be taken out of service.* *The Lahontan Regional Water Quality Control Board (Lahontan Water Board) is the oversight regulatory agency. The Water Quality Control Plan for the Lahontan Region (RWQCB, 2005) designates potential and present beneficial uses for all groundwaters of the Lower Mojave River Basin as municipal, agricultural, industrial, freshwater replenishment, and aquaculture. The Water Quality Control Plan for the Lahontan Region (RWQCB, 2005) considers the Upper Aquifer as having the potential for municipal beneficial use and the Lower Aquifer as a drinking water supply.* *The State of California regulations that are considered in this Corrective Action Plan are:*

ED_003054_00000132-00017

Comment #	Section/Page/Comment	Response:
	State Notification level for dieldrin. It is more appropriate to include the notification level as a screening criteria listed in Section 2.2.5 of the CAP rather as regulation in this section. RWQCB Response: The first paragraph of the proposed language for Section 1.3 indicates that corrective actions were "developed to comply with the **substantive** requirements of California State laws, policies and regulations." The use of the term "substantive" appears to be hold-over from CERCLA documents that are not required to comply with the non-substantive (i.e., administrative) requirements. Now that this site is not being regulated under CERCLA, remedial actions must comply will all requirements, so the term "substantive" should be deleted from this section.	• *State Water Resources Control Board (State Water Board) Resolution 68-16 (Statement of Policy with Respect to Maintaining High Quality of Waters in California);* • *State Water Board Resolution 88-63 (Sources of Drinking Water Policy);* • *State Water Board Resolution 92-49 (Policies and Procedures for Investigation and Cleanup and Abatement of Discharges Under Water Code Section 13304);* • *California Water Code (Porter-Cologne Water Quality Control Act);* • *Basin Plan (Water Quality Control Plan for the Lahontan Region).* The notification level will be used as a screening criterion listed in Section 2.2.5 of the CAP rather than as regulation in Section 1-3.

ED_003054_00000132-00018

Comment #	Section/Page/Comment	Response:
	The administrative removal of Site OU071 from the CERCLA program does not eliminate all environmental regulatory requirements. The site is still subject to the regulations listed as bullets in the response and impacts to groundwater quality are still regulated by the Water Board. References to the monitoring and reporting of pesticides in groundwater being done "voluntarily" are inappropriate and should be deleted from future versions of the PCAP. The last sentence of the third paragraph of the proposed language for Section 1.3 makes a distinction between beneficial uses for the Upper and Lower Aquifers that is not supported by the Water Quality Control Plan for the Lahontan Region. Beneficial uses designated for groundwater in the Upper Mojave River Valley include municipal (e.g., drinking water). Please eliminate the distinction between "the Upper Aquifer as having the potential for municipal beneficial use and the Lower Aquifer as a drinking water supply."	
Specific Comment 6	**Section 1.3 Page 1-3** – This section should also discuss any federal or local regulations or requirements that apply to the CAP. RWQCB Response: Response accepted.	If federal or local regulations or requirements are identified, they will be included. At this time none have been identified.
Specific Comment 7	**Section 1.3 Page 1-4** – The last sentence of this section states that the actions presented in the CAP comply with state law and resolutions as	The text will be revised to state: *"The corrective actions presented in this CAP that apply to the pesticide-impacted ground water at GAFB have been developed to comply with the substantive requirements of California*

ED_003054_00000132-00019

Comment #	Section/Page/Comment	Response:
	presented in Section 2. The regulatory framework is discussed in Section1.3 of the CAP. Section 2.2.5 includes a list of screening levels. Please reconcile this discrepancy. RWQCB Response: Response accepted.	*State laws, policies and regulations presented above."*
Specific Comment 8	**Section 2.1 Page 2-1** – This section states that Site OT071 includes 900 acres and consists of the ground water" beneath the former housing areas and golf course. Please clarify whether the Site includes residual soil contamination. Also see General Comment 1. RWQCB Response: Response accepted.	The stated purpose of the CAP (Section 1.1) is to address pesticide-related contamination in ground water. See the response to General Comment #1.
Specific Comment 9	**Section 2.2.2 Page 2-10** – The last paragraph of this section states that the Bureau of Prison's wells may provide vertical conduits for Upper Aquifer groundwater to leak into the Lower Aquifer. These vertical conduits may be allowing dieldrin-impacted groundwater to migrate into the Lower Aquifer. The CAP should evaluate and describe how these vertical conduits will be mitigated to stop this migration pathway as soon as possible. RWQCB Response: The ability of the Bureau of Prison's wells to act as vertical conduits to the Lower Aquifer represents an ongoing threat to the water quality of the Lower Aquifer. Until these wells are properly decommissioned, the remedial alternative for Site OT071 needs to be developed to control contaminant migration and cleanup the groundwater	Please refer to response to Comment No. 19.

ED_003054_00000132-00020

Comment #	Section/Page/Comment	Response:
	with the existence of these vertical conduits. This may require more aggressive remediation in the vicinity of these wells, one of which is already within the dieldrin groundwater plume. The existence of these wells provides additional complications to the remedial alternatives for Site OT071 including A) the general land use controls in the federal transfer agreement do not prevent the prison from pumping groundwater from the wells, which could result in human exposure to dieldrin-impacted groundwater; B) the pumping of groundwater from the existing wells would likely pull the southern edge of the dieldrin groundwater plume in the Lower Aquifer further south, causing the plume to spread and likely extending the cleanup timeframe; C) the general land use controls in the federal transfer agreement do not prevent Bureau of Prisons from installing additional water supply wells in the future. The remedial alternative for Site OT071 needs to be selected considering the limitations of the existing land use controls.	
Specific Comment 10	**Section 2.2.4 Page 2-12** – This section entitled sources and Migration Mechanisms" only describes how dieldrin migrated through the vadose zone to groundwater. The following components should be addressed in this section. a. A discussion of potential migration pathways that pose a threat to human health, e.g., dermal contact and inhalation, and the	The purpose of the CAP is to address pesticide-related contamination in ground water. a. This discussion is beyond the scope of the PCAP and such potential pathways are addressed in the FOST and deed for the former base housing/golf course parcel. There are no known pesticides in the soils on Parcel K (the Bureau of Prison's [BofP's] parcel). When redevelopment to enable

ED_003054_00000132-00021

Comment #	Section/Page/Comment	Response:
	environment, e.g., ecological risks. b. A discussion of migration via storm water runoff and surface water bodies. c. An evaluation of the threat that existing soil contamination poses to groundwater.	reuse occurs, there may be the potential for pesticides in the soils to migrate, but the LRA is required by the deed to take appropriate actions in the management, cleanup, handling, and/or disposal of pesticides in soils. b. Based on the CSM, the only migration that is reasonably possible at this juncture is between the two aquifers and/or within the groundwater aquifers. c. Based upon the CSM, pesticides in the soils pose no further threat to the groundwater. When and if redevelopment to enable reuse occurs, there may be some potential for more pesticides in the soils to migrate to groundwater, but the LRA is required by the deed to take appropriate actions in the management, cleanup, handling, and/or disposal of pesticides in soils. One of the ERCs in the deed is also designed to prevent further migration to groundwater during and after the redevelopment occurs. The ERC in the final deed is substantially as follows: *"Grantee covenants and agrees that it will not conduct, or allow others to conduct, any surface activities that inject or allow infiltration of water/other fluids into the groundwater (e.g., construction or creation of any groundwater recharge area, percolation pond, unlined surface impoundment or disposal*

ED_003054_00000132-00022

Comment #	Section/Page/Comment	Response:
	RWQCB Response: a. The distribution of pesticides in soil is relevant to the PCAP in the context of any potential continued sources to groundwater contamination. b. There is insufficient data to rule out continued migration of pesticides from the vadose zone to the Upper Aquifer. Such leaching of pesticides from the vadose zone to the Upper Aquifer could occur due to A) future landscape irrigation in the former housing area or the adjacent golf course, neither of which is prevented by existing land use controls in the deed; B) natural groundwater recharge events that may occur in relatively wet years (i.e., El Nino years) when winter rainfall events may overcome the vadose zone moisture deficit; C) infiltration that may occur below existing low-lying areas, such as the drainage areas described further in Specific Comment 40, where ponded water can make up the soil moisture deficit and increase the effectiveness of	*trench), unless specifically approved in writing by the Grantor, EPA, and the Regional Water Quality Control Board, Lahontan Region (RWQCB)."* See also the response to General Comment #1.

ED_003054_00000132-00023

Comment #	Section/Page/Comment	Response:
	rainfall in producing recharge. c. Additional data is required to support a CSM that demonstrates pesticides in the soils pose no further threat to the groundwater as described in b above. The ability of the existing land use controls in the deed and federal transfer agreement to prevent exposure to pesticides in groundwater are unclear, in part because there does not appear to be a systematic program implemented by the Air Force to effectively enforce the existing controls for the former housing area or Parcel K (Bureau of Prison property). Consequently, we recommend that the Air Force produce an Institutional Control Implementation and Assurance Plan as described in General Comment 11. Additional comment regarding Section 2.2.4, page 2-12: d. Please show the locations of the former pesticide mixing areas on a map in future versions of the PCAP.	
Specific Comment 11	**Section 2.2.6 Page 2-18** – This section does not adequately support the statement that the dieldrin plume is stable. The CAP should provide appropriate evaluations to determine if the plume is stable, including a statistical trend analysis and plots of dieldrin	The text will be revised to state: *Dieldrin Stability in Ground Water* *Dieldrin stability in ground water is evaluated by comparing concentration trends in wells that define the extent of dieldrin, the distribution of dieldrin in ground*

ED_003054_00000132-00024

Comment #	Section/Page/Comment	Response:
	concentrations in monitoring wells over time for all wells where dieldrin has been historically or currently detected. The trend analysis should also evaluate whether changes in groundwater levels are correlated with trends of dieldrin in monitoring wells. RWQCB Response: As mentioned in General	*water over time, and ground water modeling results. Detected concentrations of dieldrin at the site ranges from 369.to nondetect.with an average of 14.8 .ug/L. At most monitoring locations, dieldrin concentrations have varied less than 0.01 µg/L over 15 years, indicating the dieldrin is relatively stable. Trend analyses were performed on all the wells sampled and analyzed for dieldrin (Attachment A). The analyses were completed using the JMP statistical software (JMP version 10.0.1, Release: 2, Copyright 2012 SAS Institute, Inc..* *Statistically significant upward trends were observed in only three of the wells (NZ-89, NZ-91, and NZ-122). All three wells are located in the vicinity of the golf course pond. Because the golf course pond was lined in late 2006, eliminating the downward driving force in the vadose zone, trends for those three wells were reanalyzed using data from late 2006 to present. This reanalysis represents the time period when the recharge from the pond had stopped. Following the reanalysis, only one of the wells detecting dieldrin has statistically significant upward trending concentrations (NZ-122) and that concentration increase is slight (from 0.04 to 0.05 ug/L). Overall, these trend analyses indicate that, under current recharge conditions, plume concentrations have not increased over the last six years. Therefore, the time required for existing contaminated ground water to be restored to the water quality objective (WQO), as described in Section 2.2.5 (Response Level - 0.002ug /L), it is not expected to change.*

ED_003054_00000132-00025

Comment #	Section/Page/Comment	Response:
	Comment 6, future versions of the PCAP should include the most recent groundwater data. Concentration trend analysis should also be presented in the future PCAP along with a comparison to changes in groundwater levels. The dieldrin concentrations cited in the proposed revised text appear to contain errors, including 369 µg/L. According to Table 2-2, the historical maximum concentration of dieldrin in the Upper Aquifer is 0.23 µg/L.	
Specific Comment 12	**Section 2.2.7 Page 2-19** – Revise the last sentence of the first paragraph so that it is clear that the statement regarding groundwater use only applies to the Upper Aquifer. RWQCB Response: The fact that groundwater below the site is not currently used is not an adequate basis for not assessing and not restoring groundwater to the designated beneficial uses, which for groundwater in the Upper Mojave River Valley include municipal use.	The text will be revised to state: *"Therefore, direct contact with "**Upper Aquifer** ground water is not assessed."*
Specific Comment 13	**Section 2.2.8 Page 2-20** – This section summarizes the flow and transport modeling effort used to support the decisions and conclusions of the CAP. However, staff believes the modeling effort does not provide an adequate basis for corrective actions at the Site. See Specific Comments 30 through	See specific comments 30 through 39.

ED_003054_00000132-00026

Comment #	Section/Page/Comment	Response:
	39 on the flow-transport model (Appendix F). RWQCB Response: The modeling presented in Appendix F does not adequately constrain the cleanup timeframes for the remedial alternatives due to uncertainties in input parameters (including degradation rates) and the conceptual model (including the potential for additional dieldrin to enter the water bearing zones). Additional data collection is required, as described in the general comments and Specific Comment 45, before refining the groundwater modeling.	
Specific Comment 14	**Section 2.2.8** – The third paragraph of this section discusses modeled distribution of dieldrin relative to its detection limit. Specify the referenced detection limit. RWQCB Response: We agree with the proposed language for specifying the PQL. However, the Draft PCAP and the proposed response only discuss the timeframes for dieldrin to drop to the PQL under the assumption that the half-life is 6 years in the water and saturated soil. The discussion in the	(PQL - 0.002 µg/L) The text will be revised to state: *"The model simulation indicates that the dieldrin in the Upper Aquifer will likely reduce below the practical quantifiable limit (PQL) (0.002 µg/L) in about 40 years and in the Lower Aquifer will likely reduce below the PQL in less than 30 years. If the half-life of dieldrin is 6 years in the water phase, dieldrin concentrations in all the Upper Aquifer wells are likely to continuously decline."*

ED_003054_00000132-00027

Comment #	Section/Page/Comment	Response:
	Summary and Conclusions of Appendix F (Groundwater Modeling Report) indicates that the time reach the dieldrin PQL may be more than 500 years if different half-lives are assumed and the Draft PCAP did not justify using the 6-year half-life assumption. The uncertainty in the modeled cleanup times and the maximum cleanup times presented in the Draft PCAP are unacceptably large as discussed in General Comment 9.	
Specific Comment 15	**Section 2.2.8 Page 2-21** – This section describes model results for different scenarios based on various assumptions regarding degradation rates. The results are sometimes discussed in terms how long dieldrin will persist" and sometimes the results are discussed relative the California Department of Public Health (CDPH) advisory level for dieldrin. The section should be revised to specify what concentrations are used to determine that dieldrin "persists" and each scenario should be compared to this concentration and the advisory level. RWQCB Response: Response accepted.	The section will be revised to indicate that the definition of "persists" is equal to detection at concentrations above the California Department of Public Health (CDPH) advisory level for dieldrin (0.002 ug/L). Each scenario will be compared to this concentration.
Specific Comment 16	**Section 2.2.8 Page 2-21** – The Air Force modeled five scenarios using various degradation rates from cited literature sources. The modeled results provide estimates of dieldrin concentrations that range from below CDPH advisory levels within 30	See Item 11 regarding trend analyses. See Item 34 regarding model calibration. The model uses the best available published data in the estimate of dieldrin half-life.

ED_003054_00000132-00028

Comment #	Section/Page/Comment	Response:
	years to dieldrin remaining above the advisory level for more than 500 years. The Air Force should conduct site-specific evaluations or studies (e.g., trend analysis, empirically derived model calibration values, bench tests, etc.) to provide better estimates of degradation rates in the vadose and saturated zones. This information is necessary to support corrective action decisions. RWQCB Response: See General Comment 9.	
Specific Comment 17	**Section 2.3 Page 2-22** – This section states that the corrective action objectives "are to maintain the beneficial uses of groundwater resources where possible and to protect human health and the environment." Water Board staff has two comments on the stated objectives: a. Staff believes that more appropriate objectives are "to restore the site groundwater quality to the cleanup goal and protect human health, the environment, and surface water bodies." The phrase "where possible" should be deleted from the objective, because it is vague. A technical and economic feasibility analysis would be necessary to demonstrate that it was not possible to obtain water quality goals in a reasonable amount of time. b. The CAP does not address the second portion of the objective statement, i.e., "protect human health and the	a. The AF agrees that the phrase "where possible" is not appropriate for an objective. The last paragraph of the Section 2.3 text will be revised to state "The CAOs are to restore the site groundwater quality to the cleanup goal and protect human health, the environment, and surface water bodies from impacted groundwater. b. With respect to the scope of the PCAP (i.e., addressing Dieldrin in groundwater), the AF believes that the protection of "human health and the environment" has been adequately addressed by the recommended corrective action alternative, which is MNA with ICs, as well as commitment to an AF water supply contingency plan (WSCP).

ED_003054_00000132-00029

Comment #	Section/Page/Comment	Response:
	environment." The CAP must be revised to address this deficiency. RWQCB Response: a. Response accepted. b. The Water Board accepts that the objective to protect human health and the environment in the PCAP focuses on pesticides in groundwater. The evaluation of corrective action alternatives needs to be redone after the data gaps described in General Comments 2, 3, 4, and 5 are filled, and after the selection criteria are revised as described in General Comment 8.	
Specific Comment 18	**Section 3.2 Page 3-3 through 3-6** – This section and its subsections describe the "General Response Actions" considered in this CAP. The only response action that addresses human health is described under "Institutional Actions" (see following Specific Comment 19 for staff's discussion of deficiencies of Institutional Actions. None of the response actions address threat to the environment or surface water. See General Comment 1. RWQCB Response: The Water Board accepts that the PCAP focuses on pesticides in groundwater. The evaluation of corrective action alternatives needs to be redone after the data gaps described in General Comments 2, 3, 4, and 5 are filled, and after the selection criteria are revised as described in	With respect to the scope of the PCAP (i.e., addressing dieldrin in groundwater), the AF believes that the protection of "human health" has been adequately addressed by the recommended corrective action alternative, which is MNA with ICs, as well as commitment to an AF water supply contingency plan. See also, the Response to General Comment #1 above.

ED_003054_00000132-00030

Comment #	Section/Page/Comment	Response:
	General Comment 8.	
Specific Comment 19	**Section 3.2 Page 3-4** – This section describes institutional controls. It is the only alternative that addresses human health and the environment. The section states that the parcels affected by Site OT071 have been previously transferred to the Bureau of Prisons or deeded to the Southern California Logistical Airport Authority. The section lists various deed restrictions for the Southern California Logistical Airport Authority parcels. But the CAP contains no evaluation to support the appropriateness or protectiveness of these restrictions. Additionally, the section states that there are only general restrictions on the land transferred to the Bureau of Prisons. These general restrictions do not appear to be adequate to protect human health or the environment. The CAP must be revised so that the appropriateness and protectiveness of institutional controls are supported by a thorough evaluation of the Site's risks to human health, the environment, and surface water bodies for both the deeded and transferred parcels. RWQCB Response: The BoP wells provide a clear example of how land use controls can be an unreliable strategy to protect human health from contaminants in groundwater. The general	With respect to the scope of the PCAP (i.e., addressing dieldrin in groundwater), the AF believes that the protection of "human health and the environment" has been adequately addressed by the recommended corrective action alternative, which includes ICs to prevent the consumption of contaminated groundwater. At the time that the FOST and deed were being prepared, it was believed by all parties to the FFA that the ERCs were sufficiently protective. There are additional ICs in the form of governmental controls that help to ensure that contaminated groundwater will not be consumed. The AF's commitment to a WSCP [Water Supply Contingency Plan] nearly guarantees that contaminated groundwater will not be consumed. With respect to the BoP's Parcel K, though there is no deed and therefore no ERCs, some of the governmental controls apply, and the Memorandum of Understanding (MOU) also contains provisions preserving access to Parcel K and preventing removal or disruption of any remediation infrastructure placed on Parcel K. Moreover, the two (2) BoP supply wells will no longer be needed for the production of drinking water (the AF is currently attempting to get the BoP to decommission its supply wells). Thus, the AF disagrees that the restrictions on Parcel K are inadequate.

ED_003054_00000132-00031

Comment #	Section/Page/Comment	Response:
	restrictions in the federal-federal transfer agreement did not prevent water supply wells from being drilled on Parcel K, including PW-1 that is located within the Site OT071 dieldrin groundwater plume of the Lower Aquifer. The Air Force's attempts to get the BoP to decommission the water supply wells have not yet succeeded, so there is still potential for human health impacts and contaminant transport from the pesticide contamination that originated at GAFB Site OT071. There is no failsafe mechanism in place to prevent use of these wells. The revised PCAP needs to discuss A) measures to prevent exposure to the pesticide groundwater contamination from the existing BoP water supply wells, B) how the selected remedy will control possible additional exposure pathways (such as additional wells that may be installed in the future in areas not under the direct control of the Air Force) to the known groundwater contamination, and C) how the plume will be contained and plume migration will be managed.	
Specific Comment 20	**Section 3.3.2** – The evaluation of the effectiveness of monitored natural attenuation (MNA) should be based on appropriate and adequate groundwater modeling. Water Board staff has several concerns regarding the groundwater model as described in Specific Comments 30 through 39 RWQCB Response: Please refer to Specific Comments 30 through 39.	See responses to comments 30 through 39.
Specific	**Section 3.3.2 Page 3-7** – The effectiveness	See Comment 11 for a discussion of trend analysis and

ED_003054_00000132-00032

Comment #	Section/Page/Comment	Response:
Comment 21	evaluation of MNA is partially based on the assumption that the plume is stable. However, the CAP does not adequately demonstrate plume stability. See Specific Comment 11. RWQCB Response: As mentioned in General Comment 6 and Specific Comment 11, future versions of the PCAP should include the most recent groundwater data. Concentration trend analysis should also be presented in the future PCAP along with a comparison to changes in groundwater levels.	plume stability.
Specific Comment 22	**Section 3.3.2 Page 3-9** – This section states that MNA would be implemented by using the existing groundwater monitoring network. If MNA is the selected correction action, the existing monitoring network must be evaluated to determine if it will fulfill the data quality objectives of MNA. The CAP should be revised to acknowledge the necessity of this evaluation. See USEPA guidance entitled, *Performance Monitoring of MNA Remedies for VOCs in Ground Water,* EPA/600/R-04/027, April 2004. This guidance focuses on volatile organic chemicals but is applicable to all MNA remedies. RWQCB Response: Response accepted. However, we recommend additional groundwater monitoring wells prior to revising the PCAP as initially requested in General Comment 2 because the additional wells are relevant to the selection of the alternative for Site OT071.	Section 5.1.1 will be revised to add the following: *"The existing monitoring network will be evaluated and updated during the remedial design to fulfill the data quality objectives of MNA in accordance with USEPA guidance entitled, Performance Monitoring of MNA Remedies for VOCs in Ground Water, EPA/600/R-04/027, April 2004."*
Specific	**Section 3.3.6** – This section describes the	The section states "*Ground water pump and treat (P&T)*

ED_003054_00000132-00033

Comment #	Section/Page/Comment	Response:
Comment 23	Groundwater Extraction and Treatment alternative. Water Board staff believes that the CAP should evaluate two alternatives that include the groundwater extraction and treatment technology, i.e., one that would be designed to treat the groundwater plume so that water quality is restored in the shortest technically feasible time frame, and one that would be used to establish hydraulic containment in the downgradient portions of the plume to prevent plume expansion and/or movement toward water supply wells. RWQCB Response: The Water Board understands that both options are part of the P&T alternative in Section 3.3.6, but in Section 4.1 (Detailed Evaluation of Corrective Action Alternatives) the groundwater extraction alternative assumes the system would be operated to control contaminant migration. There were no alternatives retained in the Detailed Evaluation of Corrective Action Alternatives that have a chance of restoring the beneficial uses of the groundwater in a reasonable timeframe (e.g. < 100 years). At least one more aggressive remediation alternative should be carried through the detailed evaluation (e.g., hot spot treatment with groundwater extraction and treatment and/or in situ chemical oxidation). See also Specific Comment 44.	*includes extraction by pumping to remove contaminated ground water from the subsurface* ***and to control contaminant*** *migration,"* Both options of the alternative requested by the RWQCB are part of the P&T alternative.
Specific Comment 24	**Section 4.0** – Water Board staff cannot evaluate this section, Corrective Action Alternatives, until the comments on the previous sections and Appendix F, have been adequately addressed. However	Noted.

ED_003054_00000132-00034

Comment #	Section/Page/Comment	Response:
	staff provides the following Specific Comments 25 through 29. RWQCB Response: Comment accepted.	
Specific Comment 25	**Section 4.1.2 Page 4-3** – The first paragraph of this section states site criteria that make MNA an appropriate corrective action including, plume stability. The CAP does not adequately demonstrate the dieldrin groundwater plume is stable. See Specific Comment 11 RWQCB Response: As discussed in General Comment 6, the next version of the PCAP should include the most recent available data and present evidence for plume stability.	See Item 11 for a discussion of trend analysis.
Specific Comment 26	**Section 4.1.2** – Section 4.1.2 and subsequent references to Institutional Controls. See Specific Comment 19. RWQCB Response: See the Water Board comment on the Air Force response to Specific Comment 19. The recently observed drilling of fencepost holes at the former housing area without the health and safety plan required in the deed and the installation of water supply wells by BoP within and adjacent to the dieldrin groundwater plume indicate that the ICs were not effectively implemented and adequately monitored to protect human health. Please expand the discussion of the existing ICs to include explanations of how the ICs will be enforced for the duration of the selected remedy. The Overall Site	See response to Specific Comment 19.

ED_003054_00000132-00035

Comment #	Section/Page/Comment	Response:
	Plan of the Southern California Logistics Airport (Enclosure 2) shows that the planned use of the southern portion of the former residential area is "parks and recreation." The PCAP should explain how the Air Force will ensure that landscape irrigation associated with park and recreation areas will not further leach pesticides into groundwater. The Water Board requests that the Air Force prepare and Institutional Control Implementation and Assurance Plan, which can be prepared during the Remedial Design phase as described in General Comment 11. The potential limitations of ICs and the Air Forces ability to enforce them are relevant to the selection of the corrective action, so need to be explained thoroughly in the PCAP.	
Specific Comment 27	**Section 4.1.2 Page 4-4** – The last paragraph on this page discusses a Water Supply Contingency Plan that would be part of the MNA alternative. The document states that the Water Supply Contingency Plan, to be developed in the remedial design stage, would be triggered when dieldrin was detected in water supply wells at concentrations above the health notification level. Water Board staff requests that the Air Force develop a more proactive approach to protect the public supply wells, such as installation of sentinel wells to provide an early warning before the plume reaches a supply well or well field. This would allow the Air Force time to implement measures to protect the water quality of the supply wells or install a well head treatment system to prevent human exposure	The text will be revised to include the use of sentry well(s) as a part of the Contingency Plan to provide early warning. Potential locations and depths for sentry wells will be developed in the Remedial Design.

ED_003054_00000132-00036

Comment #	Section/Page/Comment	Response:
	to dieldrin RWQCB Response: Additional groundwater monitoring wells are required to further define the dieldrin groundwater plume before the PCAP is finalized in order to select the appropriate corrective action. See also Specific Comment 43. Wells installed between MW-147 and MW-149 will be useful for plume definition and as future sentinel wells. We recommend the additional groundwater monitoring wells be included in the work plan initially requested in General Comment 2.	
Specific Comment 28	**Section 4.1.3** – The evaluation of the Ground Water Extraction and Treatment Alternative is based on the assumption that the groundwater plume is stable. See Specific Comment 11. RWQCB Response: The stability of the plume in the future depends on preventing the continued leaching of pesticides into the groundwater. Trend analysis may indicate plume stability in the past, but if the concerns described in General Comments 3, 4, and 5, and Specific Comment 40 could lead to increased groundwater concentrations and plume movement in the future. The additional data collection requested in these comments will determine if the trend analysis of previous data will be a reliable indicator of future plume behavior.	See Item 11 - trend analysis.
Specific Comment 29	**Section 4.1.3 Page 4-5** – Specific Comment 27 also applies to the discussion of the Water Supply Contingency Plan in this section.	See response to Specific Comment 27.

ED_003054_00000132-00037

Comment #	Section/Page/Comment	Response:
	RWQCB Response: See additional response to Specific Comment 27.	
Specific Comment 30	**Section Appendix F** – Section F.2.1 and subsequent sections. Neither the conceptual site model nor the fate and transport model appear to include continued vadose transport of dieldrin to groundwater. This omission will result in a significant underestimation of the future concentrations (mass) of dieldrin in groundwater, its advective transport, and the time required to achieve cleanup goals. If the model does not include continued mass transport from the vadose to groundwater, it cannot be used to make decisions regarding corrective actions. RWQCB Response: Additional data collection requested in these comments is required to substantiate the inferred lack of future transport from the vadose zone to the groundwater. See also General Comments 3, 4, and 5, and Specific Comments 28 and 40. We request the investigation to determine if the vadose zone is a threat to groundwater be included in the work plan initially requested in General Comment 2.	Under existing conditions, the model should not include continued mass transport from the vadose to groundwater. One key assumption in the conceptual site model is that the dieldrin was transported to the groundwater by landscape irrigation and leakage from the unlined golf course pond. Base housing is no longer in use, landscape irrigation has been discontinued and the pond has been lined and no longer used. The naturally low precipitation and high evaporation rates at the site remove the potential for advective transport. This conclusion is borne out by the lack of increasing trends in the monitoring well data.
Specific Comment 31	**Section Appendix F Page F.2.5** – Include a figure showing the boundary conditions for this modeling effort. RWQCB Response: We request that the figures showing the boundary conditions for the modeling	Please see attached figures F-1 through F-6.

ED_003054_00000132-00038

Comment #	Section/Page/Comment	Response:
	effort be included in future versions of the PCAP.	
Specific Comment 32	**Section Appendix F Page F.2.8** – Provide the rationale for the assumption that dieldrin entered the water table in 1990. RWQCB Response: Based on the Air Force response, the proposed date should be qualifies as "even if the dieldrin entered the groundwater as late as 1990, ..."	"Section 2.1 of the main text states that "*The first housing development (Wherry Housing) was built in 1961, the Westwinds Golf Course was built in 1964, the unlined golf course irrigation pond was created in 1964, the housing area operation ceased in 1992, and the golf course pond was lined in 2007".* Therefore, the likely application of pesticides occurred between 1961 and 1992. The assumption that dieldrin entered the water table in 1990 was presented as one possible date, taking into account the possible release date of dieldrin and its travel time from the vadose to saturated zone. Overall, this date was only used to make the point that the migration rate of dieldrin in groundwater was fast enough (20 ft/year to 100 ft/year) in comparison to groundwater linear velocity that advective transport should be considered. The same qualitative conclusion could be reached if the date was earlier (i.e., sometime after 1961 to allow for migration from the surface to the groundwater). Therefore a more accurate estimation of this date is not necessary and advection transport should be considered.
Specific Comment 33	**Section Appendix F Page F.3.0** – This section states that it was not necessary to conduct a calibration of the flow model because it was calibrated for OU1 model simulations. However, prior sections of Appendix F indicate that the	The OT71 model is a subarea of the OU1 model, therefore the hydraulic parameters, recharge, pumping stress in the OT71 area are in reality the same as those in the OU1 area. Because the OU 1 ground water model (APPENDIX B) of the Focused Feasibility Study,

ED_003054_00000132-00039

Comment #	Section/Page/Comment	Response:
	dieldrin model is a subarea of the OU1 and, unlike the OU1 model, has only constant head boundaries. These factors make the dieldrin model substantially different from the OU1 model. Therefore, a flow model calibration should be performed for the dieldrin model. RWQCB Response: Flow model calibration should be performed for the dieldrin model for the reasons previously mentioned (above) after the data gaps are filled.	OU 1 TCE Ground Water Plume – Final Ground Water Simulation Results for Additional Modeling [MWH,2011] was calibrated to observed data, the hydraulic parameters for the OT71 area from the OU1 model should be close to reality and therefore lead to accurate hydraulic response to future stress changes in the OT71 model. The constant head boundaries surrounding the OT71 model domain were transient in nature and were copies of the simulated OU1 head changes along the OT71 borders over a long time (i.e., 500 years). They were used to simulate the impact from stresses at a larger scale (i.e., climatic effects on Mojave River flows, GAFB recharge and GAFB pumping wells). In effect, these constant head boundary cells in the OT71 model capture the hydraulic connection between the OT71 subarea and the outside area in OU1. The OU1 model does not have these constant head boundaries specified because hydraulic connection across these cells exists automatically. Therefore, the OT71 flow model does not need a separate calibration.
Specific Comment 34	**Section Appendix F Page F.3.0** – This section states that the transport model could not be calibrated because the dieldrin plume is diffuse and concentrations are low. It is not clear why these factors prohibit transport model calibration. If the transport model cannot be calibrated, the model outputs cannot be used for decision making	The plume was generated from a non-point source, the entire housing area and golf course. Because of the lack of a specific geographical source and low concentrations in the groundwater plume, it is not possible to define a flow path along which transport can be evaluated. The time period for which there are dieldrin data is also relatively short, 1996 – present. Transport calibration

ED_003054_00000132-00040

Comment #	Section/Page/Comment	Response:
	purposes.	does not appear to be meaningful. When uncertainty in initial concentrations and source conditions is high, there are many degrees of freedom and transport calibration is normally done with fixed sorption and decay parameters while adjusting initial and boundary conditions, which may not help to improve the estimation of sorption and decay parameters. There could be multiple solutions for the combinations of initial concentrations, historical source location, duration and strength that satisfy the calibration. As seen from the OU1 TCE plume transport calibration, despite much effort to calibrate initial concentrations of TCE in 1996, yielded no improvement gained in parameter estimation of sorption partition coefficient or decay half-life (Appendix B of the Focused Feasibility Study OU1 TCE Ground Water Plume, MWH, 2010). The purpose of transport calibration is to improve the accuracy of predictive simulations of the model, which depends on recent plume delineation, current and future conditions of dieldrin sources, and sorption and decay parameters. However, because site investigation suggests high uncertainty in dieldrin source conditions and insufficient historical concentration delineation , it is anticipated that transport calibration would have too many degrees of freedom to improve on the parameters needed for predictive simulations (i.e. ,current and future conditions of dieldrin sources, sorption and decay parameters). Using sensitivity analysis to provide a range of possible outcomes is more practical.

ED_003054_00000132-00041

Comment #	Section/Page/Comment	Response:
	RWQCB Response: The transport model needs to be calibrated after collecting additional data.	The dieldrin transport model was based on a calibrated flow model, recently delineated plume concentrations, using state-of-the science practice of estimating sorption partition coefficient based on Koc and site-specific foc (section F.2.8.3), referencing literature ranges of degradation while taking into account field conditions and performing sensitivity analysis on degradation rate. Even without transport calibration, the current transport model, coupled with sensitivity analysis of source and degradation is sufficient to perform comparisons of cleanup time for remedy selection.
Specific Comment 35	**Section Appendix F Page F.4.0** – This section lists assumptions for the flow-and- transport model. Some of assumptions regarding discharges and extraction may not be conservative and should be confirmed with discussions with the appropriate entity (e.g., Victor Valley Wastewater Reclamation Authority, City of Adelanto, etc.). If there is uncertainty in the estimates, a sensitivity analysis should be conducted for the variable. Appendix F only reports a sensitivity analysis for one of these assumptions, e.g., the half-life of dieldrin. Also see Specific Comment 16 regarding site-specific half-life values. RWQCB Response: Response accepted.	Section F.4.0 presented three assumptions regarding discharges from VVWRA and City of Adelanto (Assumption 4, 5, and 6). Assumption 5 – VVWRA will stop discharging water to their percolation ponds in the future, was reported as confirmed information (Section 4.2.2.4 in Appendix G, Draft Petroleum CAP, MWH, 2011). We will confirm Assumptions 4 and 6 with VVWRA and City of Adelanto, and perform sensitivity analysis if necessary.
Specific	**Section Appendix F Page F.4.1** – This section	The transport model was used to calculate total mass in

ED_003054_00000132-00042

Comment #	Section/Page/Comment	Response:
Comment 36	states that there is an estimated 10 pounds of dieldrin in the aquifer. The section should include or reference the assumptions and methodology used to calculate this estimate. Additionally, see Specific Comment 30 regarding continued dieldrin transport to groundwater from the vadose zone. RWQCB Response: Response accepted. Please add clarifying language to the next version of the PCAP.	dissolved and absorbed phases, based on current plume concentrations and the assumed partition coefficient (1.2 ml/g, Assumption 10 in Section F.4.0).
Specific Comment 37	**Section Appendix F** – In addition to the Base Case, the model should also include simulations of the various corrective actions listed in Section 4.2 and as discussed in Specific Comment 23. RWQCB Response: Response accepted.	Simulations of corrective actions will be conducted after agreements are reached on the other issues of modeling.
Specific Comment 38	**Section Appendix F Page F.4.1** – Please specify the value of the practical quantitation limit that is referenced in the last sentence of this section and where referenced throughout the Appendix. For example, the California Detection Level for Reporting is 0.02 µg/L. RWQCB Response: Please repeat the PQL of 0.002 µg/L in this section and where referenced throughout the Appendix as previously requested.	The PQL value referenced throughout the report is 0.002 µg/L.
Specific Comment 39	**Section Appendix F Page F.4.1 through F.4.3** – Water Board staff cannot comment on the model outputs and the Air Force's conclusions until the modeling effort is revised to address all of the above the comments that relate to the modeling	Comment noted.

ED_003054_00000132-00043

Comment #	Section/Page/Comment	Response:
	and model assumptions. RWQCB Response: Additional data as described above will need to be collected before refining the groundwater model.	
	The following additional specific comments from the Water Board are based on a review of current data and information for the site.	
Specific Comment 40	**Section 2.1 Page 2-2** – This section describes irrigation in the former housing area that was "sufficient enough to support runoff into two drainage culverts that supported vegetation year-round…" and "…was likely a key transport mechanism that resulted in the migration of pesticides from the surface to ground water." Please provide a map showing the location of the drainages that contained year-round vegetation and summarize what if any soil samples were collected from those areas. Areas where ponding occurred and may occur in the future are a concern due to their potential to leach pesticide contamination through the vadose zone and further impact groundwater during relatively wet years even in the absence of landscape irrigation. Pesticide concentrations throughout the vadose zone below the ponding areas need to be characterized to understand this potential threat to groundwater and monitoring wells located immediately downgradient of these potential source areas are required to monitor this threat to groundwater. We request the investigation of the	

ED_003054_00000132-00044

Comment #	Section/Page/Comment	Response:
	ponding areas be included in the work plan initially requested in General Comment 2.	
Specific Comment 41	**Section 2.1 Page 2-3** – This section describes the persistence of the groundwater mound in the vicinity of the formerly unlined water storage pond near the golf course and states "The ground water mound persists because of continued golf course irrigation." The potential for future landscape irrigation to continue to provide infiltration water that may leach pesticides into the groundwater represents a continued threat to groundwater. Future irrigation of the golf course and/or other landscape irrigation are not prevented by the existing institutional controls in the deed restriction. The characterization of groundwater contamination source areas and the selection of remedial alternatives need to be selected considering the limitations of the existing land use controls.	
Specific Comment 42	**Section 2.2.4 Page 2-13** – The first paragraph states that "The pond is currently lined and the mound is less pronounced since the infiltration ceased." Please present data in the next version of the PCAP to document the height of the groundwater mound located below the pond over time. A soil boring advanced to groundwater and located adjacent to the pond is recommended to document moisture content and residual dieldrin concentrations in this area. We request the boring and associated investigations be included in the work plan initially requested in General Comment 2.	
Specific	**Section 2.2.6 Page 2-16** – Figure 2-4 is introduced	

ED_003054_00000132-00045

Comment #	Section/Page/Comment	Response:
Comment 43	in the second paragraph. Additional groundwater flow direction arrows should be added to the figure to show radial flow away from the groundwater mound located near the pond.	
Specific Comment 44	**Section 3.3.6** – This screening evaluation of in situ chemical oxidation is overly simplified and the technology is dismissed without adequate consideration. The plume is referred to as a dilute groundwater plume, but recent dieldrin concentrations reported in the Draft PCAP are two orders of magnitude above the health-based reference concentration that corresponds to 10^{-6} excess cancer risk (0.002 µg/L). In other words, there are relative hot spots that could be targeted for treatment with a technology like ISCO. The technical challenges that are listed to dismiss the effectiveness, implementability, and cost effectiveness of ISCO are the same technical challenges involved with most ISCO projects.	
Specific Comment 45	Additional monitoring wells are required to better understand the distribution of pesticides in groundwater. In the Lower Aquifer for example, the maximum concentration has been detected at monitoring well MW-147, with the nearest well to the east (toward the Adelanto water supply wells) being the non-detect well MW-149 located over 2500 feet from MW-147. The southern limit of the dieldrin plume in the Lower Aquifer is not currently defined. Additional wells are required in these areas to better define the dieldrin plume to select the appropriate corrective action (e.g., possible hot spot treatment	

ED_003054_00000132-00046

Comment #	Section/Page/Comment	Response:
	approach) and to predict the potential arrival of dieldrin at MW-149, the Lower Aquifer monitoring well closest to the Adelanto water supply wells. We request these additional monitoring wells be included in the work plan initially requested in General Comment 2.	
Specific Comment 46	In the *Memorandum of Understanding (MOU) Between Department of the Air Force and the Federal Bureau of Prisons for the Transfer of Parcel K on George Air Force Base, San Bernardino County, California* (October 1994), an Environmental Baseline Survey (EBS) was presented to summarize all the IRP sites on Parcel K. That MOU stated that "The EBS shall be updated to include IRP sites subsequently identified on Parcel K." The original EBS did not include the dieldrin-contaminated groundwater associated with OT071, which extends onto Parcel K as shown in Figures 2-4 and 2-5 of the CAP. Please summarize the status of updating the EBS to include OT071 and indicate whether such an update has been provided to the Bureau of Prisons.	
Specific Comment 47	**Section 4.1.3, 1st Paragraph** – Regarding the groundwater extraction and treatment alternative, this section states that "Because the Upper Aquifer in the vicinity of Site OT071 is expected to be a low-yield aquifer (similar to OU 1), installation of extraction wells for mass removal is judged to be impractical. Thus, a GETS at Site OT071 is assumed to be operated for controlling contaminant migration, rather than for mass removal."	

ED_003054_00000132-00047

Comment #	Section/Page/Comment	Response:
	The Water Board does not agree that mass removal is impractical for OU 1 or for the Site OT071 plume (based on the OU 1). If the Air Force wishes to assert that previous remediation efforts were ineffective and use that as the basis for corrective action decisions in the PCAP, then the Air Force needs to present data to support that a previous remediation effort was A) well-designed, B) appropriately optimized, and C) ineffective before dismissing the treatment technology as ineffective for the Site OT071.	

R:\RB6\RB6Victorville\Shared\Units\CINDI UNIT\Todd\GAFB\OT071 – Dieldrin\CommentsOnRTCs_PCAP_OT071_v11.doc

ED_003054_00000132-00048

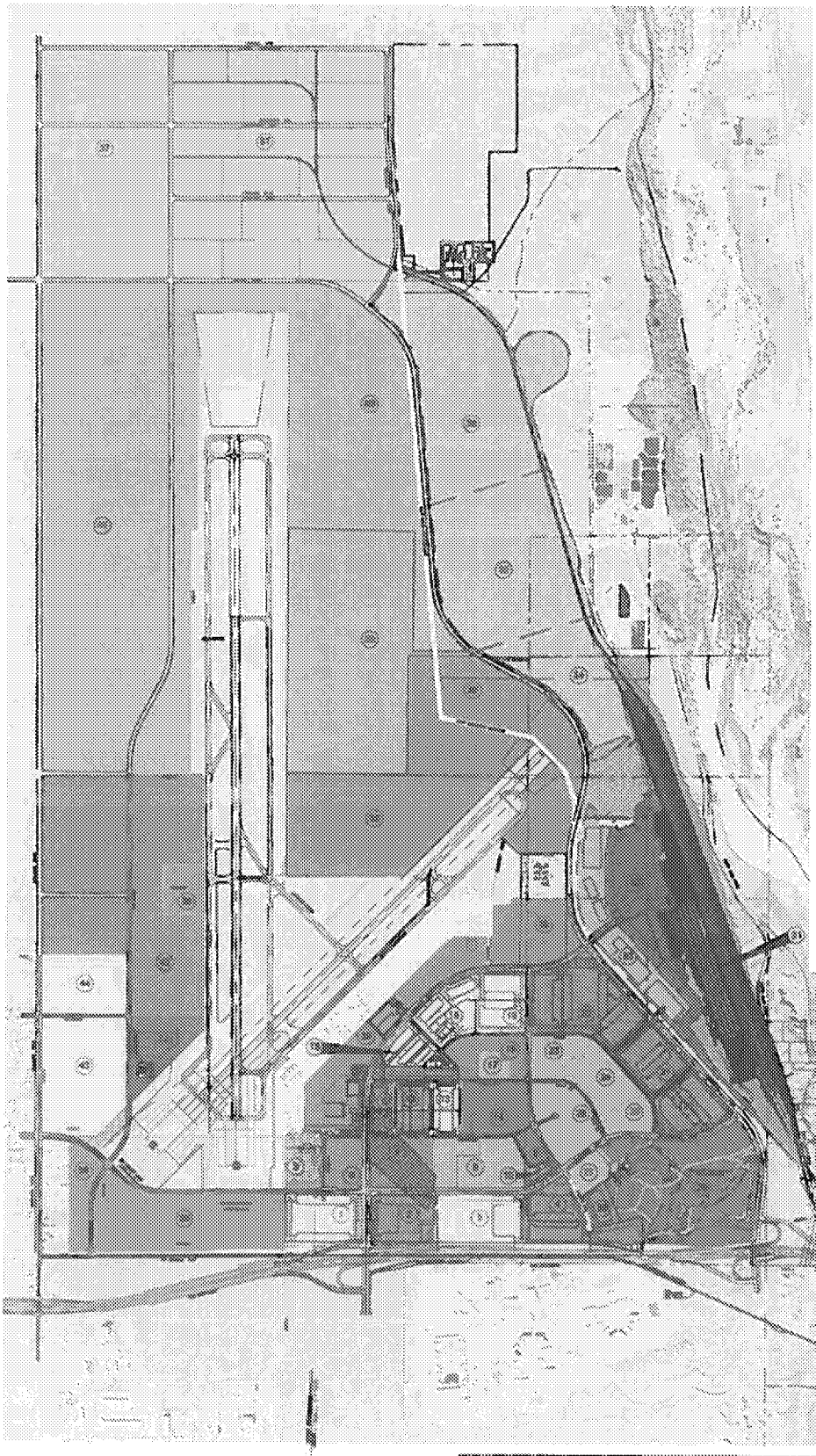

LEGEND:

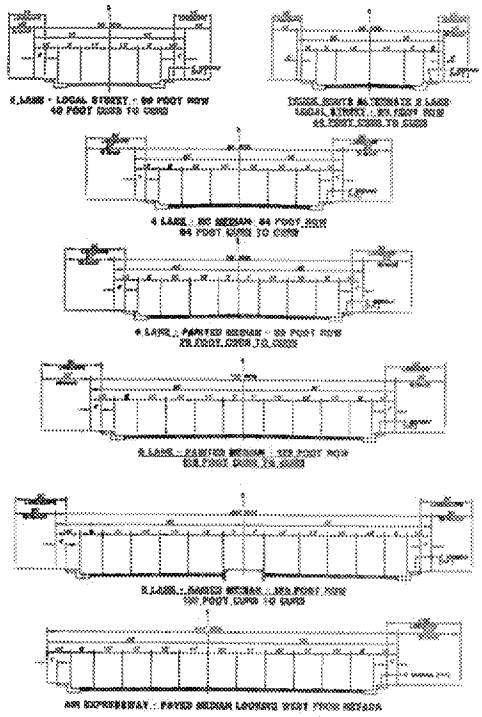

TYPICAL
ROADWAY SECTIONS

RBF CONSULTING

SCLA - OVERALL SITE PLAN - AERIAL

SOUTHERN CALIFORNIA LOGISTICS AIRPORT

CITY OF VICTORVILLE

1