316(b) CWIS Addendum

NPDES Notice of Intent

Renaissance Drill Ship

Rowan Companies, Inc.

Houston, TX

June 2015

Prepared by:

CK Associates
Environmental Consultants

Redacted

CK Project Number: 12386

TABLE OF CONTENTS

INTRODUCTION **1**

§I.B.12.a. APPLICATION INFORMATION **1**

§I.B.12.a.1. New Non-Fixed Facilities 1

§I.B.12.a.1.i. Source Water Physical Data 1

§I.B.12.a.1.ii. Cooling Water Intake Structure Data 3

§I.B.12.a.1.iii. Velocity Information 6

§I.B.12.a.2. New Fixed Facilities 6

§I.B.12.b. COOLING WATER INTAKE STRUCTURE OPERATION REQUIReMENTS **6**

§I.B.12.b.1. New Non-Fixed Facilities 6

§I.B.12.b.2. New Fixed Facilities that Do Not Employ Sea Chests 7

§I.B.12.b.3. New Fixed Facilities that Employ Sea Chests 7

§I.B.12.b.4. For All Facilities 7

§I.B.12.c. MONITORING REQUIREMENTS **8**

§I.B.12.c.1. New Non-Fixed Facilities 8

§I.B.12.c.2. New Fixed Facilities that Do Not Employ Sea Chests 8

§I.B.12.c.3. New Fixed Facilities that Employ Sea Chests 8

§I.B.12.d. REPORTING REQUIREMENTS **8**

LIST OF FIGURES

Figure 1	Vicinity Map
Figure 2	Potential Operating Locations & Essential Fish Habitat
Figure 3	Engineering Drawings for Aft Cooling Water Intake Structure (Port and Starboard)
Figure 4	Engineering Drawings for the Starboard Forward Cooling Water Intake Structure
Figure 5	Engineering Drawings for the Port Forward Cooling Water Intake Structure
Figure 6	Flow Balance Diagram

LIST OF APPENDICES

Appendix A	Intake Velocity Calculations
Appendix B	Hydraulic Zone of Influence Calculations
Appendix C	Monitoring Methodology

INTRODUCTION

Rowan Companies Inc. (Rowan) proposes to operate the Renaissance Drill Ship (drill ship) in the Gulf of Mexico (GOM). The drill ship will use once-through cooling water as part of its normal operations. This permit Notice of Intent (NOI) addendum is being submitted to the United States Environmental Protection Agency (USEPA) Region VI to address requirements set forth by regulations under Section 316(b) of the Clean Water Act (CWA), 33 U.S.C. 1326(b) to address concerns of Cooling Water Intake Structures (CWIS) on impingement, mortality and entrainment (IM&E) of vulnerable marine organisms. The permit NOI submission is in accordance with the provisions of the National Pollutant Discharge Elimination System (NPDES) permitting regulations as set forth in Title 40 of the Code of Federal Regulations (CFR) at §122.21.

The information required for submission of the NOI and related to this addendum are as follows:

Design Intake Capacity (million gallons per day)	**89.06**
Design Intake Velocity (in feet per second)	**0.42**
Percentage of Intake Water for Cooling	**64**

Specifically, this permit NOI addendum is intended to satisfy the requirements cited under the NPDES General Permit for New and Existing Sources and New Dischargers in the Offshore Subcategory of the Oil & Gas Extraction Category for the Western Portion of the Outer Continental Shelf of the Gulf of Mexico (GMG290000, General Permit). The order of this addendum follows that of the General Permit requirements, with excerpts included.

The following sections discuss how Rowan meets the requirements of the General Permit for:

- Applying for coverage under the Permit;
- Operating the CWIS in the GOM;
- Maintaining and monitoring the CWIS during operation; and
- Reporting data and information regarding the CWIS to USEPA.

§I.B.12.A. APPLICATION INFORMATION

§I.B.12.a.1. New Non-Fixed Facilities

The owner or operator of a new offshore oil and gas extraction facility must provide the following information with the NOI prior to operating. New non-fixed facilities must submit source water physical data, cooling water intake structure data, and velocity information.

§I.B.12.a.1.i. Source Water Physical Data

A narrative description and/or maps providing sufficient information on predicted locations during the permit term in sufficient detail for the Director to determine the appropriateness of additional impingement requirements. This information is only required to be submitted once for any facility.

Rowan plans on contracting the drill ship to work in the GOM, at locations over 100 miles from the nearest shore. The GOM is the largest semi-enclosed coastal sea in the western Atlantic, encompassing about 579,150 mi^2 (1,500,000 km^2). The coastal areas contain more than 750 estuaries, bays, and sub-estuaries that are associated with 47 major estuaries. The GOM is divided into the continental shelf, continental slope and the GOM basin.

The Offshore Operators Committee (OOC) conducted an industry-wide study in 2009 to provide a comprehensive review of fishery data for the GOM and to evaluate the impacts of future CWIS on fish and shellfish in the GOM. This study concluded that the greatest biological concentration of key marine species and their spawning habitat is restricted to waters of the continental shelf. There is no projected CWIS development for this area. A vicinity map and an essential fish habitat are included as Figures 1 and 2, respectively.

Rowan will be operating at areas within the continental slope of the GOM, which is mostly frequented by species of pelagic fish, of which there are approximately 45 species and 17 families of pelagic fishes associated with offshore platforms in the GOM. Adult pelagic fishes are not candidates for entrainment and impingement due to their size and ability to swim away from the CWIS. Most pelagic fishes inhabiting the GOM have pelagic eggs and larvae that can drift with the prevailing water currents and will be susceptible to entrainment in the CWIS.

Results of the 2014 OOC GOM CWIS Entrainment Monitoring Study indicated that plankton and ichthyoplankton densities in deeper water of the GOM were only a small fraction of those found at the shallow depths (i.e. less than 200 meters) and the areas closer to shore along the continental shelf. The study concluded that the entrainment of ichthyoplankton by CWIS will not have a noticeable or biologically significant impact to commercially or recreationally important species.

CWIS impacts within the continental slope can be assessed using the two representative species, yellowfin tuna and red snapper due to their commercial and recreational significance. Yellowfin tuna adults may be found in the vicinity of the CWIS, but are too large to be entrained within the CWIS. Red snapper adults are not typically found in the deep waters of the continental slope.

The Rowan drill ship will have no significant impacts on commercially or recreationally important aquatic species due to the projected operating locations and the engineering controls to be implemented to prevent impingement and entrainment.

§I.B.12.a.1.ii. Cooling Water Intake Structure Data

The drill ship has a total design intake flow (DIF) of 89 million gallons per day (MGD) with 64% of that DIF designated for cooling purposes. The actual intake flow (AIF) is 34 MGD, which is estimated by actual pump usage and percent utilization.

§I.B.12.a.1.ii (a) Design and construction technology plans and a description of operational measures which will be implemented to minimize impingement.

The technology utilized by Rowan to minimize impingement is reduced intake velocity equal to 0.5 ft/s or less, which is achieved through the design and construction of the sea chest openings for each CWIS and the gratings covering those openings.

The USEPA has defined a reduced intake velocity equal to 0.5 ft/s or less as a "best performing technology" in Volume 76, Section 76 of the Federal Register (page 22203) and states that greater than 90% of all species can avoid impingement when intake velocities are below the 0.5 ft/s threshold. Each of the CWIS has been designed and constructed to have through-screen velocities less than 0.5 ft/s under clean-screen conditions.

This design feature has been verified through calculations provided in Appendix A. These calculations also allow for evaluation of the intake flows at which each CWIS must operate to maintain the through-screen intake velocity below the 0.5 ft/s threshold.

§I.B.12.a.1.ii (a) (i) A narrative description of the design, operation of the design, and construction technologies, including fish handling and return systems, that the facility will utilize to maximize the survival of species expected to be most susceptible to impingement. Provide species specific information that demonstrates the efficacy of the technology.

The Rowan drill ship has four CWIS, two located forward and two located aft. Each CWIS consists of one high sea chest, one low sea chest, and a pump room that has the capacity to provide water for multiple purposes. Each sea chest contains between five and twelve hull openings. There are five types of screens that are used to cover a given hull opening. This design and construction result in an open flow area that ranges from between 3.2 to 12.8 ft^2 per hull opening.

The calculations in Appendix A confirm that the design of the sea chest openings provide open flow area for each CWIS to have a through-screen velocity below the 0.5 ft/s threshold under clean-screen conditions, which maximizes the survival of species expected to be susceptible to impingement according to the source water physical data.

Operational measures to be taken in order to maintain these intake velocities include routine monitoring and maintenance using an air backwash system provided for each screen to remove accumulated biological growth, as well as cathodic protection to prevent biomass growth on screen surfaces.

There is minimal potential for environmental impact associated with impingement onto the screens of any of the CWIS because there is a low occurrence of impingeable organisms in the projected operating area of the CWIS, reduced intake velocities less than 0.5 ft/s, and velocity maintenance devices.

§I.B.12.a.1.ii (a) (ii) A narrative description of the design, operation of the design, and construction technologies that the facility will utilize to minimize entrainment of those species expected to be most susceptible to entrainment.

The design technologies utilized by Rowan in order to reduce entrainment include low intake velocity and a small Hydraulic Zone of Influence (HZI). The HZI has been referenced in 40 CFR 125.134(b)(94)(i) for intake structures in terms of selecting and implementing technologies and measures to reduce impingement mortality and entrainment. Calculation details and results are provided in Appendix B, and indicate that the HZI for each CWIS is less than 1.25 ft.

The HZI would likely be further reduced with the inclusion of tidal current sweeping velocities. In order for potential IM&E impacts to occur, aquatic organisms would have to pass through the HZI. Since the HZI is a small geographical reach when compared to the overall habitats available within the GOM, the opportunity for IM&E impacts is significantly diminished. Also, the ambient water currents in the GOM may be greater than the intake velocity whereby the CWIS entrainment and effects will be further minimized.

§I.B.12.a.1.ii (a) (iii) Design calculations, drawings, and estimates to support the descriptions above.

CK Associates (CK) performed an analysis of the Rowan CWIS design to verify that maximum through-screen velocities would be below the 0.5 ft/s threshold (Appendix A) and separate calculations to determine the HZI for each of the CWIS (Appendix B).

Figures 3 through 5 contain engineering drawings of the CWIS that were used in these calculations.

§I.B.12.a.1.ii (b) A narrative description of the configuration of each of the cooling water intake structures and its location in the water body and in the water column.

Each of the four Rowan CWIS is configured with one high sea chest located approximately 7 meters below the water line and one low sea chest located approximately 11 meters below the water line. At no time will a CWIS operate in a partially submerged state.

The Rowan drill ship is anticipated to be operating at locations greater than 100 miles from nearest shore in portions of the GOM with water depths greater than 200 meters. The limited number of species whose reproductive strategies rely on deep water indicates that impingement and entrainment will be minimal.

§I.B.12.a.1.ii (c) A narrative description of the operation of each of the cooling water intake structures, including design intake flows, daily hours of operation, number of days of the year in operation, and seasonal changes, if applicable.

The Rowan drill ship will collect sea water via four CWIS comprised of eight sea chests. The CWIS will provide sea water to four pump rooms that distribute the water throughout the ship. The four CWIS are as follows:

- Aft Port CWIS with an AIF equal to 22.03 MGD;
- Aft Starboard CWIS with an AIF equal to 6.58 MGD ;
- Forward Starboard Pump Room CWIS with an AIF equal to 4.75 MGD; and
- Forward Port Pump Room CWIS with an AIF equal to 0.70 MGD.

Each CWIS is operated 24 hours per day and 365 days per year when operating under the NPDES permit. No seasonal changes in cooling water intake are anticipated due to the distance from land and low number of impingeable organisms present, the low through-screen intake velocities, and the low HZI.

§I.B.12.a.1.ii (d) A flow distribution and water balance diagram that includes all sources of water to the facility, recirculating flows, and discharges.

A water balance diagram is provided on Figure 6. This figure depicts flow distribution in terms of DIF, which differs from the AIF mentioned above.

§I.B.12.a.1.ii (e) Engineering drawings of the cooling water intake structure.

Figures 3 through 5 contain engineering drawings of each CWIS.

§I.B.12.a.1.iii. Velocity Information

§I.B.12.a.1.iii (a) A narrative description of the design, structure, equipment, and operation used to meet the requirements of a maximum through screen intake velocity of 0.5 ft/s at each cooling water intake structure.

The CWIS have been designed to have a maximum through-screen intake velocity, under clean-screen conditions, less than 0.5 ft/s. Calculations verifying the through-screen velocity can be found in Appendix A. Biomass growth on the screens will be limited through cathodic protection. Through-screen velocities will be maintained through an air backwash system to remove any accumulated biomass. Additional screen cleaning may be performed by divers and/or remotely operated underwater vehicles (ROVs) when conditions permit if monitoring indicates the need for such additional measures and it is safe to do so.

§I.B.12.a.1.iii (b) Design calculations showing that the velocity requirement will be met at the minimum ambient source water surface elevation and maximum head loss across the screens or other device.

Supporting calculations are provided in Appendix A. These calculations assume full screen submergence because the sea chests are located between 7 and 11 meters below the water line.

§I.B.12.a.2. New Fixed Facilities

The Rowan drill ship is a non-fixed facility. Therefore, the requirements of §I.B.12.a.2 do not apply.

§I.B.12.b. COOLING WATER INTAKE STRUCTURE OPERATION REQUIREMENTS

§I.B.12.b.1. New Non-Fixed Facilities

§I.B.12.b.1.i. The cooling water intake structure(s) must be designed and constructed so that the maximum through-screen design intake velocity is 0.5 ft/s or less.

Each of the Rowan CWIS have been designed and constructed so that the maximum through-screen design intake velocity is 0.5 ft/s, which has been verified in Appendix A. The HZI was also evaluated in Appendix B to determine the distance from the screen in which the intake velocity is greater than 0.25 ft/s.

§I.B.12.b.1. ii. The permittee must minimize impingement mortality of fish and shellfish through use of cooling water intake design and construction technologies or operational measures.

The reduced intake velocity calculated in Appendix A is considered effective technology for minimizing mortality of fish and shellfish. These calculations were performed under clean-screen conditions. Appendix B calculations take into

consideration additional operating conditions to confirm that the through-screen velocity maximum will be met and impingement mortality minimized to the greatest extent possible.

§I.B.12.b.2. New Fixed Facilities that Do Not Employ Sea Chests

The drill ship is a non-fixed facility. As such, the requirements of §I.B.12.b.2 do not apply.

§I.B.12.b.3. New Fixed Facilities that Employ Sea Chests

The drill ship is a non-fixed facility. As such, the requirements of §I.B.12.b.3 do not apply.

§I.B.12.b.4. For All Facilities

§I.B.12.b.4.i. Routine biocide treatment of velocity or screen monitoring system is excluded from conditions established for chemically treated miscellaneous discharges provided biocides use is minimized to that needed for effectiveness and discharges are minimized. The type and amount of biocide and the date and time of application shall be recorded and made available for inspection.

Rowan does not intend to use biocides to maintain through-screen velocities. However, if experience dictates that use of biocides is necessary, Rowan will record the type and amount of biocide along with the dates and times of biocide application and will make such records available for inspection.

§I.B.12.b.4.ii. Operators shall, to the extent practicable, schedule and perform maintenance of monitoring devices or screens so as to minimize increased IM&E due to maintenance activities

Maintenance will not cause through-screen velocity of any of the eight sea chests to exceed the 0.5 ft/s threshold. This assumption is verified through the worst-case scenario used for the calculations in Appendix B where the intake flow for each pump is devoted to a single sea chest rather than being split between two sea chests. This scenario would occur if one sea chest was taken out of service for maintenance. Under this worst-case scenario, the through-screen intake velocity of the remaining sea chest would still continue to operate at through-screen velocities that are less than 0.5 ft/s.

§I.B.12.C. MONITORING REQUIREMENTS

§I.B.12.c.1. New Non-Fixed Facilities

§I.B.12.c.1.i. Visual or remote inspections. Beginning the coverage of this permit, the operator must conduct either visual inspections or use remote monitoring devices during the period the CWIS is in operation. The operator must conduct visual or remote monitoring monthly to ensure that the required design and construction technologies are maintained and operated so they continue to function as designed. Visual or remote monitoring is not required when conditions such as storms, high seas, evacuation, or other factors make it unduly hazardous to personnel, the facility, or the equipment utilized. The operator must provide an explanation for any such failure to visually or remotely monitor with the subsequent DMR submittal.

Rowan will conduct monthly visual inspections and/or remote monitoring during CWIS operation to ensure that the design and construction technologies are functioning as designed. In the event that such monitoring is not possible due to hazardous factors beyond Rowan's control, an explanation will be provided on the Discharge Monitoring Report (DMR) submittal.

§I.B.12.c.1.ii.Velocity Monitoring. The operator must monitor intake flow velocity across the intake screens to ensure the maximum intake flow velocity does not exceed 0.5 ft/s. The intake flow velocity shall be monitored daily. A downtime, up to two weeks, for periodic maintenance or repair is allowed and must be reported in the DMRs.

Rowan will use monthly visual inspections to estimate screen occlusion and combine these estimates with a linear occlusion model (Appendix C) to monitor velocity across the intake screens. Although an exponential increase in percent occlusion is the most physically descriptive occlusion model, the linear model has multiple benefits including:

- Conservative estimates of through-screen velocity. These conservative estimates serve to offset errors in the estimation of percent occlusion through visual monitoring;
- The ability to determine when the facility exceeds the maximum permissible velocity for DMR reporting purposes; and
- Ease and reproducibility of the calculations.

§I.B.12.c.2. New Fixed Facilities that Do Not Employ Sea Chests

The drill ship is a non-fixed facility. As such, the requirements of §I.B.12.c.2 do not apply.

§I.B.12.c.3. New Fixed Facilities that Employ Sea Chests

The drill ship is a non-fixed facility. As such, the requirements of §I.B.12.c.3 do not apply.

§I.B.12.d. REPORTING REQUIREMENTS

An annual status report of the required biological entrainment monitoring study must be provided to EPA for fixed facilities that do not employ sea chests. For all new facilities required to comply with intake structure monitoring requirements must submit the following information quarterly:

As a non-fixed facility, the requirement to provide an annual status report of the required biological entrainment monitoring study does not apply. However, Rowan will perform the required reporting below.

§I.B.12.d.1. Visual or remote device inspection: Number of fish/shellfish impinged and estimated screen area blockage for each screen.

Rowan will provide the number fish and/or shellfish impinged on each CWIS along with the estimated screen blockage for each CWIS. The monitoring and impingement assessments will be performed monthly and submitted quarterly as part of the DMR reporting process.

§I.B.12.d.2. Intake velocity monitoring: Number of days on which the maximum intake velocity is greater than 0.5 ft/s.

Rowan will combine the results of the monthly visual inspection with a linear occlusion model to monitor velocity across the intake screens. The model output will be used to provide estimates of the number of days during which the maximum intake velocity exceeds 0.5 ft/s. Rowan acknowledges that the linear model tends to overestimate the number of days during which the maximum velocity is exceeded.

FIGURES

FIGURE 1

VICINITY MAP

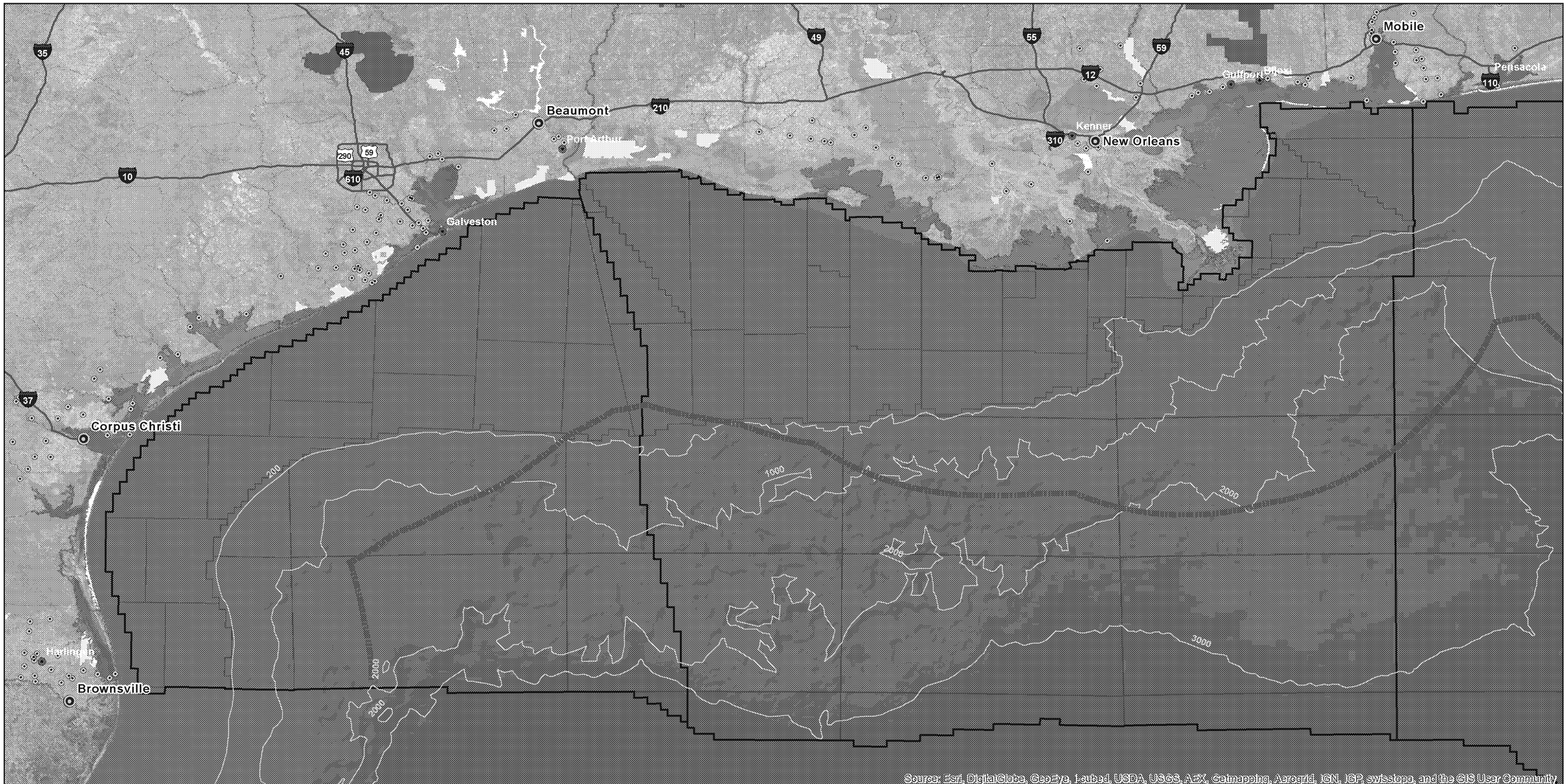

Coastal Cities (ESRI-POP2000)

- 0 - 50,000
- 50,001 - 100,000
- > 100.000
- Bathymetric Contour in Meters (NOAA)
- Planning Areas (BOEM-GOMR)
- Protraction Areas (BOEM-GOMR)

Federal Lands (ESRI)

- Forest Service
- Fish and Wildlife Service
- National Park Service

DRILL SHIP WILL OPERATE ≥100 MILES OFFSHORE

0 20 40
Miles

ROWAN COMPANIES, INC
HOUSTON, TEXAS

NPDES 316(b) REQUIREMENTS

VICINITY MAP

RENAISSANCE DRILL SHIP

CK Associates Environmental Consultants

Drawn:	SKM/AM10.3
Checked:	JLD
Approved:	JLD
Date:	5/20/2015
Dwg. No.:	B12386-03

FIGURE 1

FIGURE 2

POTENTIAL OPERATING LOCATIONS & ESSENTIAL FISH HABITATS

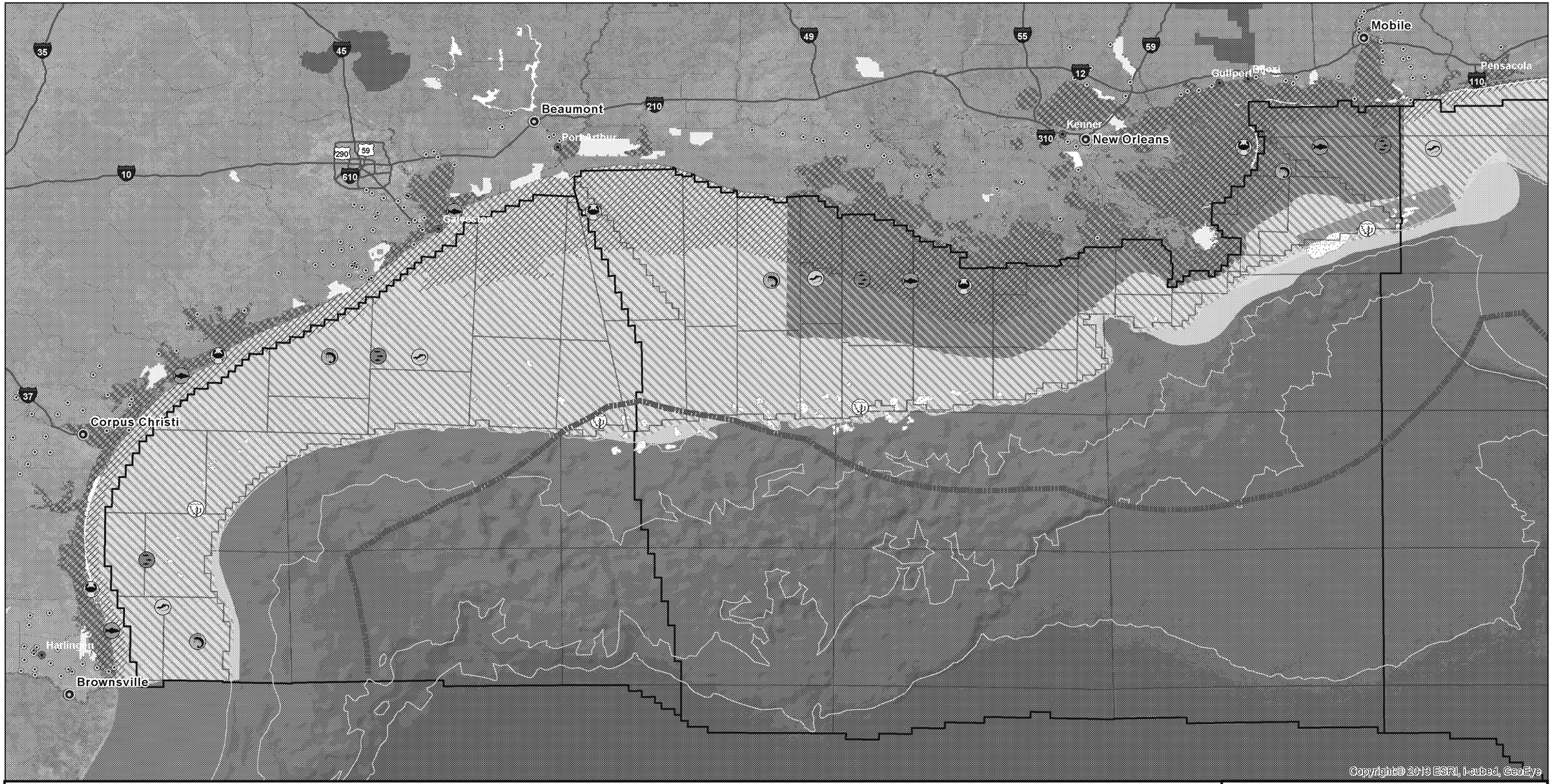

Coastal Cities (ESRI-POP2000)

- 0 - 50,000
- 50,001 - 100,000
- > 100.000
- Bathymetric Contour in Meters (NOAA)
- Planning Areas (BOEM-GOMR)
- Protraction Areas (BOEM-GOMR)

Federal Lands (ESRI)

- Forest Service
- Fish and Wildlife Service
- National Park Service

Essential Fish Habitats

- Stone Crab
- Spiny Lobster
- Coral
- Coastal Migratory Pelagics
- Red Drum
- Shrimp
- Reef Fish
- Coral
- Red Drum
- Shrimp
- Reef Fish
- Coastal Migratory Pelagics
- Spiny Lobster
- Stone Crab

DRILL SHIP WILL OPERATE ≥100 MILES OFFSHORE

0 20 40
Miles

ROWAN COMPANIES, INC
HOUSTON, TEXAS

NPDES 316(b) REQUIREMENTS

POTENTIAL OPERATING LOCATIONS & ESSENTIAL FISH HABITAT

RENAISSANCE DRILL SHIP

CK ASSOCIATES Environmental Consultants

Drawn:	SKM/AM10.3
Checked:	JLD
Approved:	JLD
Date:	5/20/2015
Dwg. No.:	B12386-01

FIGURE 2

FIGURE 3

ENGINEERING DRAWINGS FOR THE STARBOARD FORWARD COOLING WATER INTAKE STRUCTURE

AFT HIGH SEA CHEST GRATING ARRANGEMENT

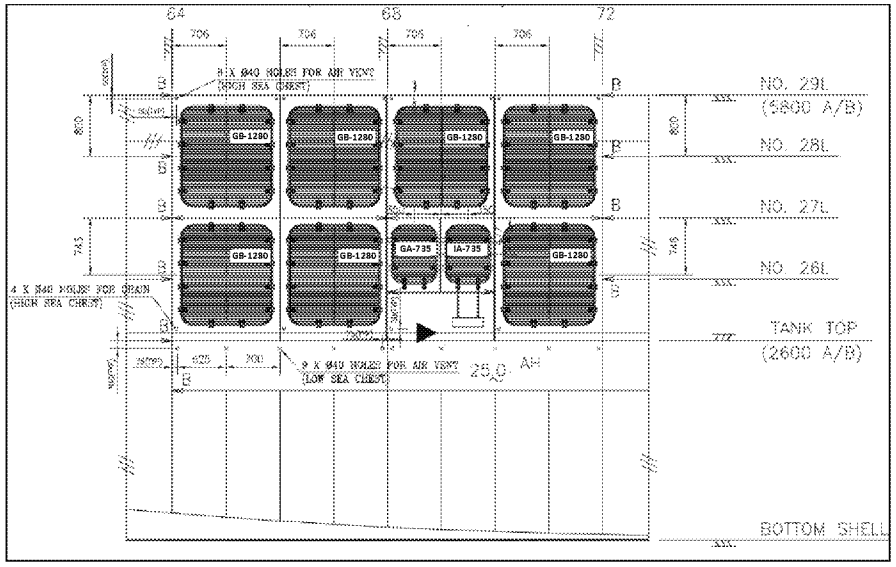

AFT LOW SEA CHEST GRATING ARRANGEMENT

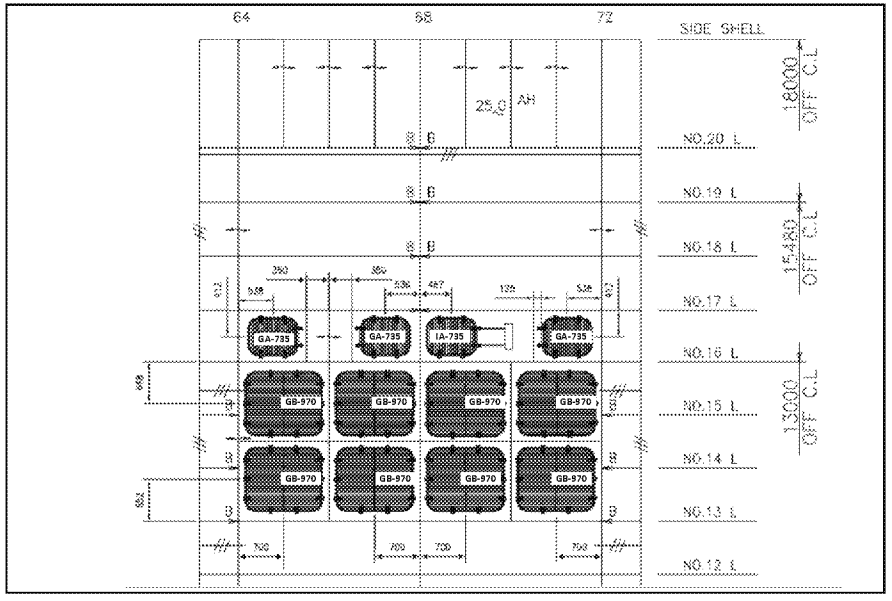

GRATING DETAILS

IA-735

Open Flow Area = 3300 cm²
3.552 ft²

Where:
C = 735 mm
D = 690 mm
DI = 120 mm
H = 400 mm
N = 23

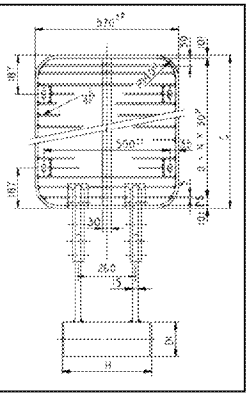

GA-735

Open Flow Area = 3300 cm²
3.552 ft²

Where:
C = 735 mm
D = 690 mm
N = 23

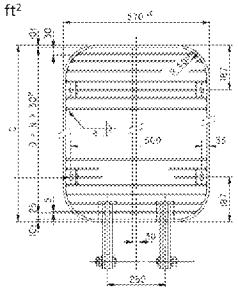

GB-970

Open Flow Area = 9120 cm²
9.817 ft²

Where:
C = 970 mm
D = 925 mm
N = 31

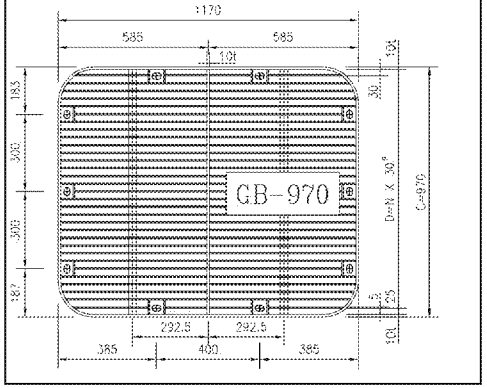

GB-1280

Open Flow Area = 11970 cm²
12.884 ft²

Where:
C = 1280 mm
D = 1235 mm
N = 41

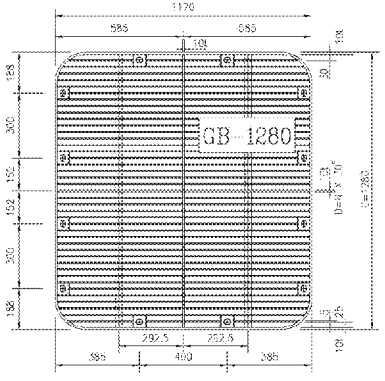

Each Aft CWIS, one located on the port side and one located on the starboard side of the drill ship, consists of a high sea chest and a low sea chest

ROWAN COMPANIES, INC
HOUSTON, TX

NPDES 316(b) REQURIEMENTS

ENGINEERING DRAWINGS FOR EACH AFT CWIS (PORT AND STARBOARD)

RENAISSANCE DRILL SHIP

CK ASSOCIATES Environmental Consultants

Drawn	SKM/PPT
Checked	JLD
Approved	JLD
Date	5/18/2015
Project No.	12386

FIGURE 3

FIGURE 4

ENGINEERING DRAWINGS FOR THE PORT FORWARD COOLING WATER INTAKE STRUCTURE

STBD FWD LOW SEA CHEST GRATING ARRANGEMENT

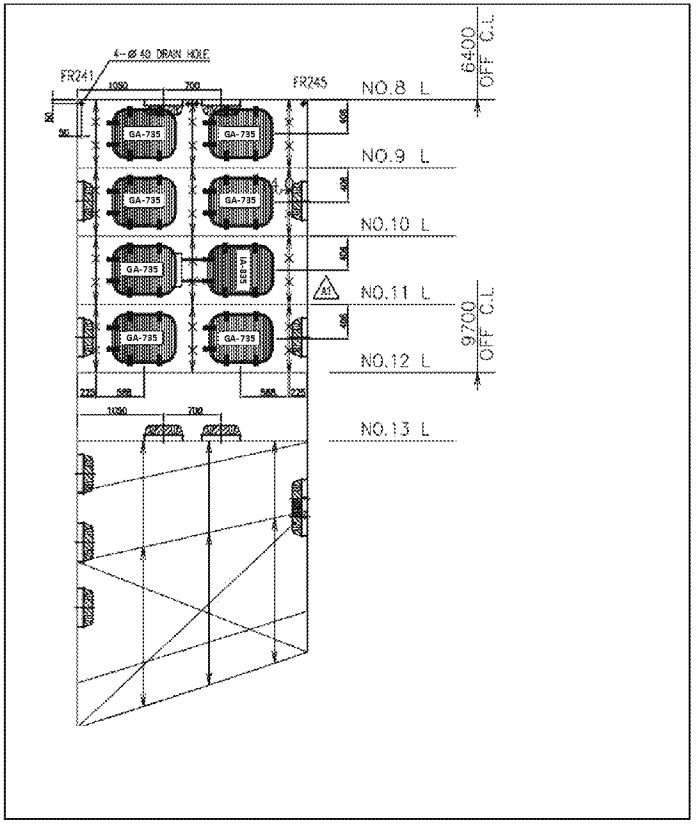

STBD FWD HIGH SEA CHEST GRATING ARRANGEMENT

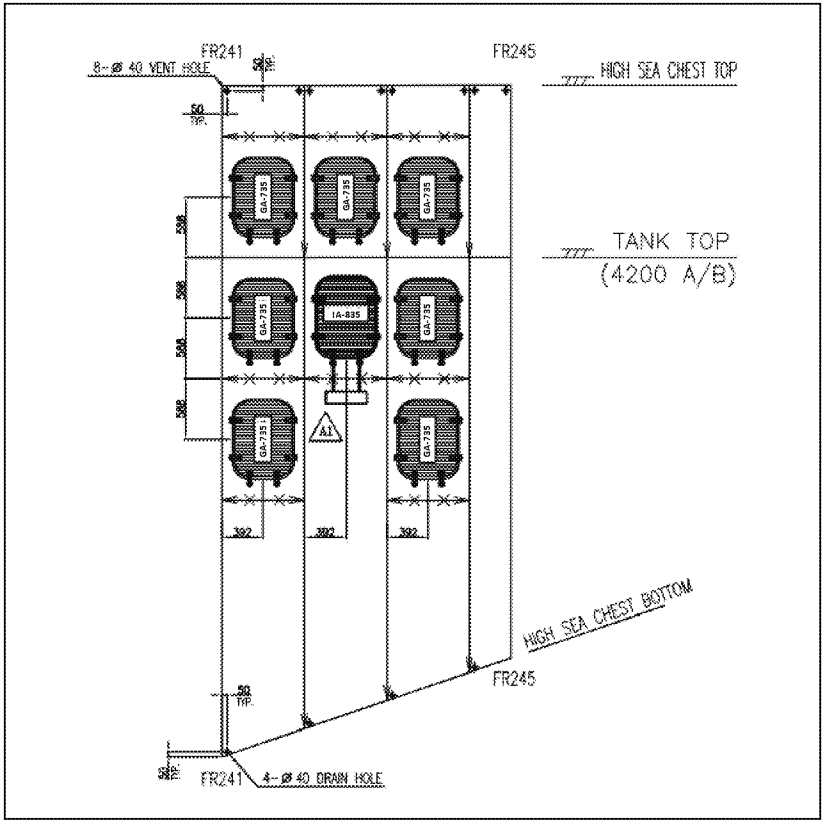

GRATING DETAILS

IA-835

Open Flow Area =
3000 cm²
3.229 ft²

Where:
C = 835 mm
D = 690 mm
DI = 120 mm
H = 400 mm
N = 31

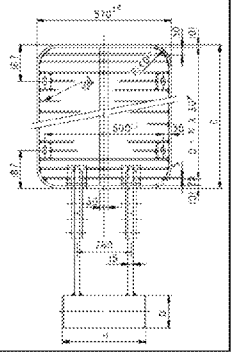

GA-735

Open Flow Area =
3300 cm²
3.552 ft²

Where:
C = 735 mm
D = 690 mm
N = 23

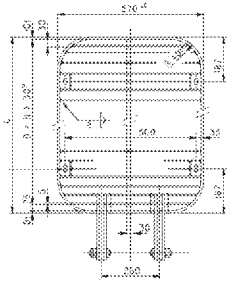

ROWAN COMPANIES, INC
HOUSTON, TX

NPDES 316(b) REQURIEMENTS

ENGINEERING DRAWINGS FOR THE STARBOARD FORWARD CWIS

RENAISSANCE DRILL SHIP

CK ASSOCIATES

Drawn	SKM/PPT
Checked	JDL
Approved	JDL
Date	5/18/2015
Project No	12386

FIGURE 4

FIGURE 5

ENGINEERING DRAWINGS FOR THE AFT COOLING WATER INTAKE STRUCTURE

PORT FWD LOW SEA CHEST

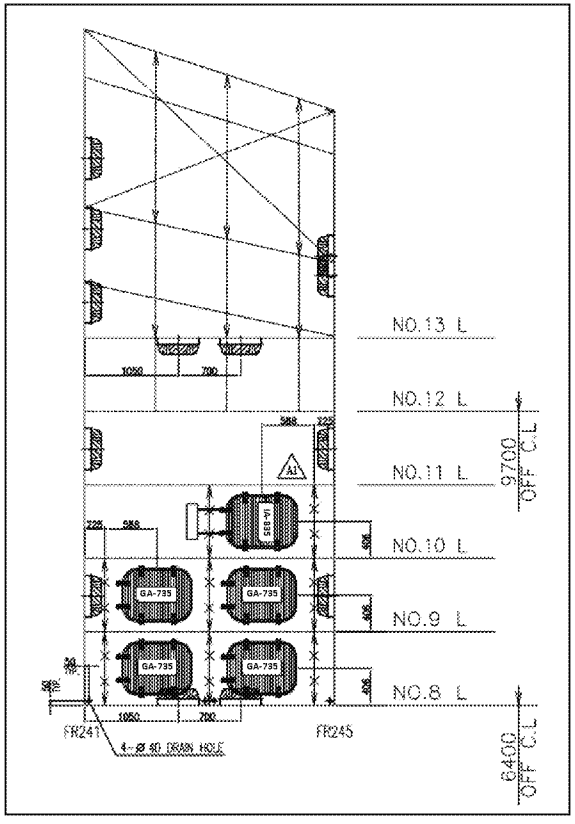

PORT FWD HIGH SEA CHEST

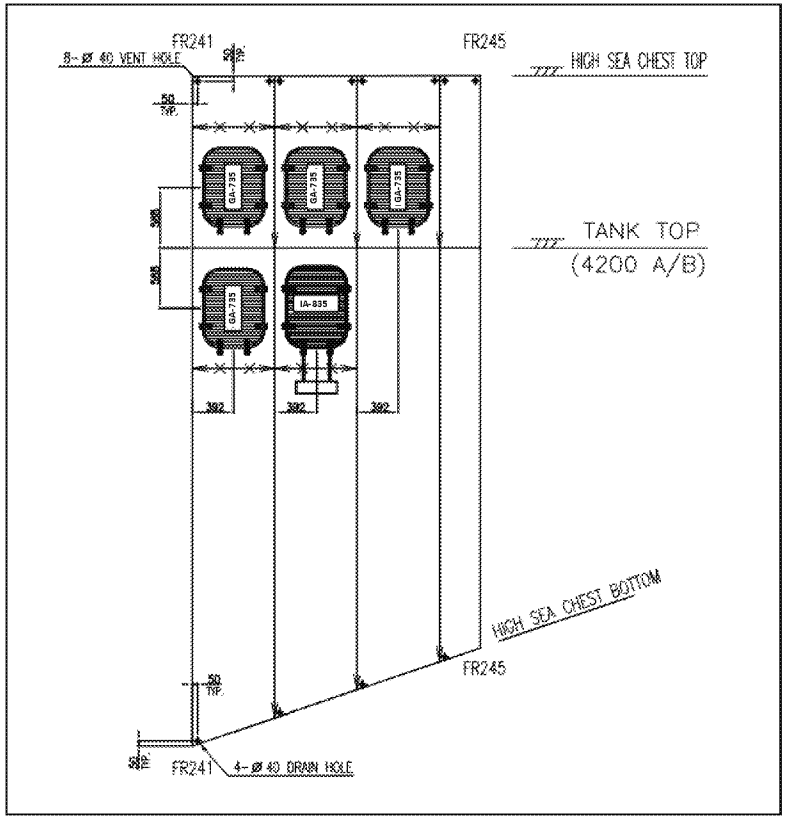

GRATING DETAILS

IA-835

Open Flow Area =
3000 cm²
3.229 ft²

Where:
C = 835 mm
D = 690 mm
DI = 120 mm
H = 400 mm
N = 31

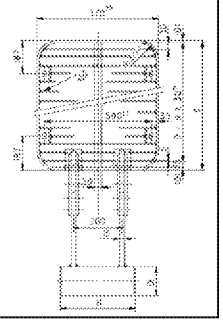

GA-735

Open Flow Area =
3300 cm²
3.552 ft²

Where:
C = 735 mm
D = 690 mm
N = 23

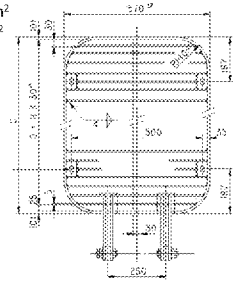

ROWAN COMPANIES, INC
HOUSTON, TX

NPDES 316(b) REQURIEMENTS

ENGINEERING DRAWINGS FOR THE PORT FORWARD CWIS

RENAISSANCE DRILL SHIP

CK ASSOCIATES Environmental Consultants

Drawn:	SKM/PPT
Checked:	JDL
Approved:	JDL
Date:	5/18/2015
Project No.	12386

FIGURE 5

FIGURE 6

FLOW BALANCE DIAGRAM

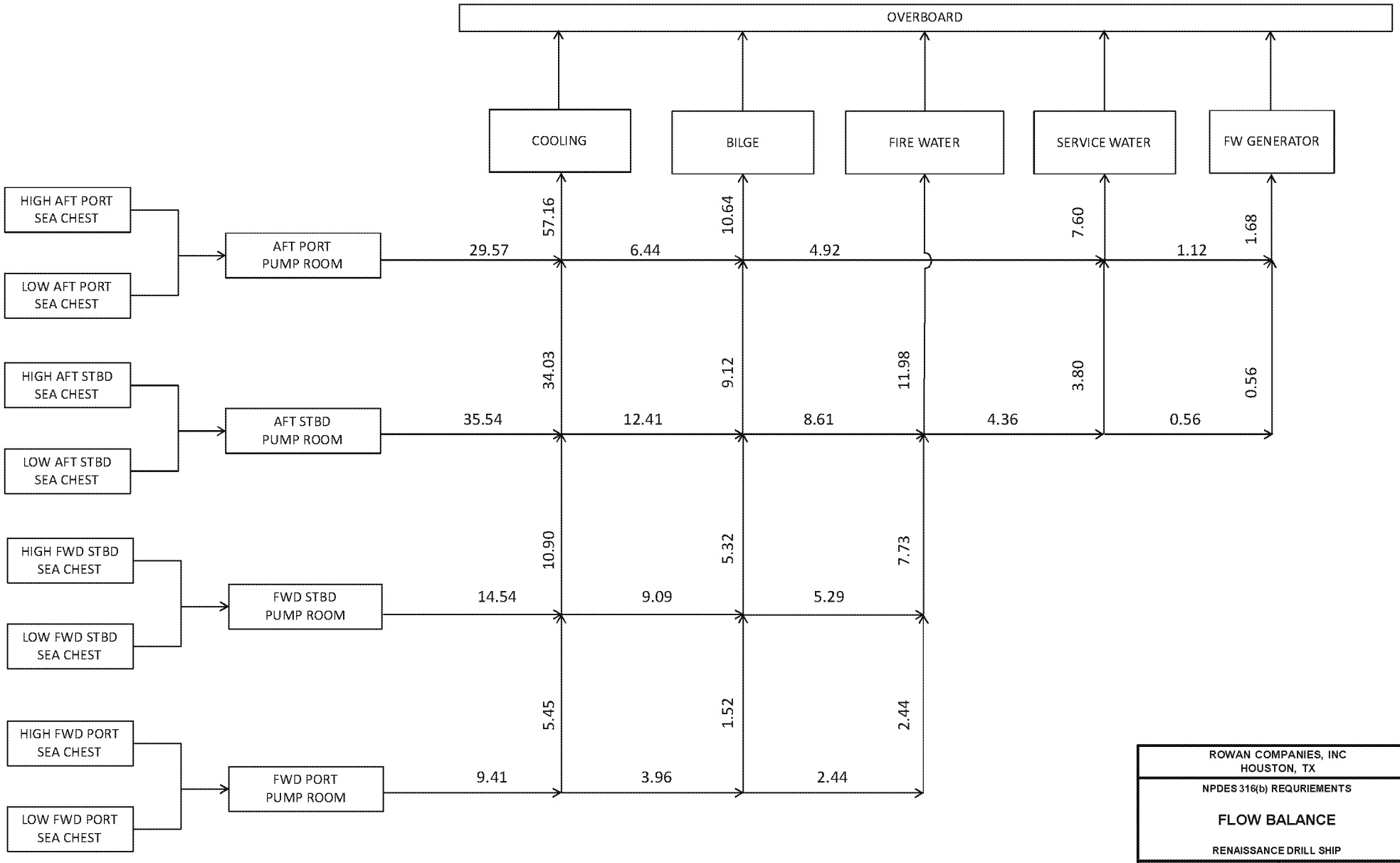

Note: Design Intake Flow (DIF) in Million Gallons Per Day (MGD)

ROWAN COMPANIES, INC
HOUSTON, TX

NPDES 316(b) REQURIEMENTS

FLOW BALANCE

RENAISSANCE DRILL SHIP

CK ASSOCIATES

Drawn:	SKM/PPT
Checked:	JDL
Approved:	JDL
Date:	5/18/2015
Project No:	12386

FIGURE 6

APPENDICES

APPENDIX A

INTAKE VELOCITY CALCULATIONS

NPDES 316(b) NOI ADDENDUM
APPENDIX A: INTAKE VELOCITY CALCULATIONS

ROWAN COMPANIES INC.

RENAISSANCE DRILL SHIP

OBJECTIVE

To calculate the through-screen intake velocity for each of the four CWIS aboard the Rowan Drill Ship in order to demonstrate that the CWIS is designed and constructed to meet the requirements of Section 316(b) of the Clean Water Act and 40 CFR 125.134 and thus protective of impingeable species.

GENERAL EQUATION & DEFINITIONS

The intake velocity, v_{intake} for a CWIS is directly proportional to the intake flow rate (Q) for the pumps associated with the CWIS and indirectly proportional to the open flow area (A_{open}) through the sea chests of the CWIS. This is summarized in the equation:

$$v_{intake} = \frac{Q}{A_{open}}$$

Where:

- v_{intake} is the through-screen velocity for a given CWIS;
- A_{open} is the area of a sea chest opening through which water enters the CWIS, which is the area of the hull opening minus the area of the screen covering the opening; and
- Q is the volumetric flow rate of cooling water collected via a given CWIS, which can be based on the design capacity of the pump or the actual utilization of the pump itself when the CWIS is operating.

ASSUMPTIONS

1. The CWIS is operating under clean-screen conditions, in which the open flow area of each sea chest opening is not reduced by biological growth. The CWIS will be monitored during operation and the sea chest screens cleaned as necessary to maintain an open flow area that keeps the intake velocity below the 0.5 ft/s threshold.
2. The open flow area for a given CWIS is the cumulative open area of all screens serving a given CWIS.
3. The Intake Flow used to demonstrate the CWIS design and construction is the Actual Intake Flow (AIF), which represents the pumps utilized when the CWIS is operating, rather than the full capacity of all pumps associated with the CWIS.

CALCULATION RESULTS

The calculation results for each CWIS based on DIF and AIF are provided below.

CWIS ID	Open Flow Area (ft^2)[A]	DIF (ft^3/s)[B]	Intake Velocity based on DIF (ft/s)	AIF (ft^3/s)[B]	Intake Velocity based on AIF (ft/s)
Aft Port	190.04	45.77	0.24	34.10	0.18
Aft Starboard	190.04	55.01	0.29	10.18	0.05
Forward Starboard	56.19	22.51	0.40	7.36	0.13
Forward Port	34.88	14.57	0.42	1.08	0.03

[A] Data used to calculate Open Flow Area is provided in Table 1.

[B] Data used to calculate Design Intake Flow (DIF) and Actual Intake Flow (AIF) is provided in Table 2.

NPDES 316(b) NOI ADDENDUM
APPENDIX A: INTAKE VELOCITY CALCULATIONS
ROWAN COMPANIES INC.
RENAISSANCE DRILL SHIP

Table 1 Summary of Open Flow Area Data for each CWIS
Data obtained from engineering drawings for the configuration of each sea chest opening and the dimensions of the grating on each opening

CWIS ID	Grating Type	Open Flow Area (ft^2)	Number of Identical Grating Types	Net Open Flow Area (ft^2)
Aft Port	IA-735	3.552	2	190.04
	GA-735	3.552	4	
	GB-970	9.817	8	
	GB-1280	12.884	7	
Aft Starboard	IA-735	3.552	2	190.04
	GA-735	3.552	4	
	GB-970	9.817	8	
	GB-1280	12.884	7	
Forward Starboard	GA-735	3.552	14	56.19
	IA-835	3.229	2	
Forward Port	GA-735	3.552	8	34.88
	IA-835	3.229	2	

Table 2 Summary of Intake Flows by Usage Type

CWIS ID	Design Intake Flow: Maximum Capacity of each pump associated with the CWIS (MGD) (Actual Intake Flow: Estimated by projected pump usage or utilization during operation [MGD])					
	Cooling Water	Ballast/Bilge	Fire Water	Service	FW Generator	Total
Aft Port	23.13 (17.11)	1.52 (0.00)	--	3.80 (3.80)	1.12 (1.12)	29.57 (22.03)
Aft Starboard	23.13 (6.02)	3.80 (0.00)	4.25 (0.00)	3.80 (0.00)	0.56 (0.56)	35.54 (6.58)
Forward Starboard	5.45 (4.75)	3.80 (0.00)	5.29 (0.00)	--	--	14.54 (4.75)
Forward Port	5.45 (0.70)	1.52 (0.00)	2.44 (0.00)	--	--	9.41 (0.70)
Total	57.16 (28.58)	10.64 (0.00)	11.98 (0.00)	7.60 (3.80)	1.68 (1.68)	89.06 (34.06)

APPENDIX B

HYDRAULIC ZONE OF INFLUENCE CALCULATIONS

NPDES 316(b) NOI ADDENDUM
APPENDIX B: HYDRAULIC ZONE OF INFLUENCE CALCULATIONS
ROWAN COMPANIES INC.
RENAISSANCE DRILL SHIP

OBJECTIVE

To calculate the hydraulic zone of influence (HZI) for each CWIS aboard the Rowan Drill Ship by use of a readily definable and calculable geometric shape.

Formula	Description
$d_{eq} = \sqrt{\frac{4 \times A_{open}}{\pi}}$	Diameter of a circle with area equivalent to the Open Flow Area, A_{open}, of the sea chest
$A(z) = \frac{\pi}{4}(d_{eq} + 2z)^2$	Area of the flux plane whose diameter increases by 2 feet for every foot of increase in z. The boundaries of the flux plan radiate at 45° angles.
$v(z) = \frac{Q}{A(z)}$	Velocity of water through the flux plane.
$\text{HZI} = \frac{\sqrt{\frac{Q}{0.25\,\frac{ft}{s}}} - \sqrt{A_{open}}}{\sqrt{\pi}}$	The HZI for each CWIS is provided in Table 1, as indicated by z when v(z)=0.25 ft/s.

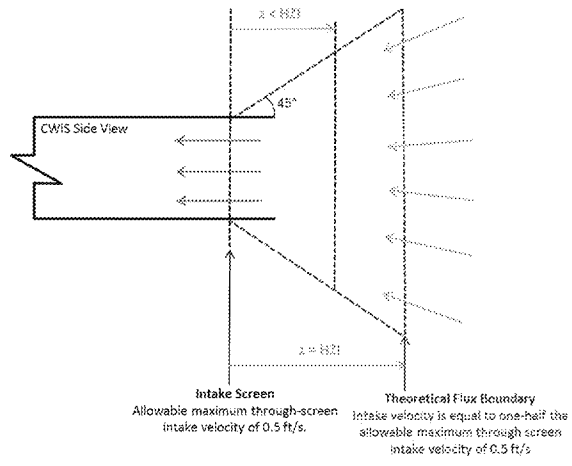

ASSUMPTIONS

1. The HZI is defined as the volume bounded by the intake screen and an imaginary plane (flux plane) at some distance, z, from the CWIS screen at which the velocity through the flux plane is equal to one-half of the maximum allowable through-screen velocity (see figure). This assumption relies on the definition of reduced intake velocity by the USEPA where it is state that "90% of all species can avoid impingement when intake velocities are below the 0.5 ft/s threshold." Therefore, greater than 90% of all species can avoid impingement at the flux plane at which the velocity is 0.25 ft/s.
2. Each CWIS sea chest consists of multiple openings with overlapping HZI. Therefore, the HZI was calculated by combining the multiple screens into a single equivalent circular intake for each sea chest. This assumes that cooling water flows to the CWIS within a theoretical geometric shape. This assumption is conservative because it ignores edge effects of water flowing outside of the cone to the CWIS thus projecting the HZI to be slightly farther from the screen surface that it actually may be.
3. The shape of the HZI is represented as truncated cone with the edges defined as the surface of the equivalent circular intake and the flux plane defining the edge of the HZI; and with sides radiating at 1:0.5 (H:V) angles from the CWIS perimeter such that the diameter of the flux plane increases by 2 feet for each foot that separates the flux plane from the screen.

NPDES 316(b) NOI ADDENDUM

APPENDIX B: HYDRAULIC ZONE OF INFLUENCE CALCULATIONS

ROWAN COMPANIES INC.

RENAISSANCE DRILL SHIP

CALCULATION RESULTS

Each CWIS consists of two sea chests that are hydraulically connected. The impact of screen maintenance was evaluated for each CWIS by calculating the HZI when all intake flow for a given CWIS was collected through a single sea chest along with normal flow conditions (flow split between high and low sea chests). The HZI for a CWIS is equal to 0.0 ft because the through-screen velocity is equal to or less than 0.25 ft/s under clean screen and normal operating conditions as shown in Table 1:

TABLE 1

CWIS ID	Q (ft^3/s)[A]	Sea Chest	A_{open} (ft^2)	V_{intake} (ft/s)	HZI(ft)
Aft Port	34.10	High	97.29	0.35	1.02
		Low	92.74	0.37	1.16
		High and Low	**190.04**	**0.18**	**0.0**
Aft Starboard	10.18	High	97.29	0.12	0.0
		Low	92.74	0.20	0.0
		High and Low	**190.04**	**0.07**	**0.0**
Forward Starboard	7.36	High	28.09	0.28	0.07
		Low	28.09	0.28	0.07
		High and Low	**56.19**	**0.14**	**0.0**
Forward Port	1.08	High	17.44	0.07	0.0
		Low	17.44	0.07	0.0
		High and Low	**34.88**	**0.03**	**0.0**

[A] The Intake Flow used for these calculations is the Actual Intake Flow (AIF)

APPENDIX C

MONITORING METHODOLOGY

NPDES NOI 316(b) ADDENDUM
APPENDIX C: MONITORING METHODOLOGY

ROWAN COMPANIES INC.

RENAISSANCE DRILL SHIP

INTRODUCTION

This report summarizes the methodology to be used to monitor the through-screen intake velocity for the Cooling Water Intake Structures (CWIS) at the proposed Rowan Companies Inc. (Rowan) drill ship. To ensure that intake velocities are maintained at or below the 0.5 ft/s threshold, 40 CFR 125.139(b) and Section I.B.12.c.2.iii of the *NPDES General Permit for New and Existing Sources and New Dischargers in the Offshore Subcategory of the Oil and Gas Extraction Category for the Western Portion of the Outer Continental Shelf of the Gulf of Mexico* (general permit) require new facilities to monitor intake flow velocity across the intake screens to ensure that the maximum intake flow velocity does not exceed 0.5 ft/s.

The general permit requires monthly velocity monitoring and reporting of monthly data on a quarterly basis. Rowan proposes to use a through-screen velocity monitoring program that is based on an estimate of percent screen occlusion developed from visual inspection of the CWIS. The number of days with intake velocity greater than 0.5 ft/s due to occlusion will be estimated using the model presented below and will be reported on the monthly Discharge Monitoring Report (DMR).

VELOCITY MONITORING BASIS

Rowan proposes to use a through-screen velocity monitoring program that is based on an estimate of percent screen occlusion developed from visual inspection of the CWIS. The following assumptions have been used to determine the daily through-screen velocity based on percent screen occlusion.

Assumption 1: The Through-Screen Velocity of the Clean-Screen Condition is Known

An engineering analysis of the CWIS has indicated that the through-screen design intake velocity of each sea chest does not exceed the 0.5 ft/s threshold required by the general permit conditions.

Assumption 2: A Mechanism Exists to Estimate Screen Occlusion

Screen occlusion will be estimated on a monthly basis using the results of visual inspections.

Assumption 3: Daily Screen Occlusion can be Conservatively Modeled

Operating locations are restricted to locations greater than 100 miles from the nearest land in deep water. As such, the intake screens are not subject to the rapid occlusion that can occur in nearshore and onshore applications due to leaf and branch impingement. Occlusion in the offshore intake screens is likely to be dominated by the growth of organic matter, such as barnacles, on the screens.

Biological growth on these screens is limited by surface area. As biological matter grows on the screens, the matter itself provides additional surface area on to which other organisms can attach. In theory, the attachment process, and hence screen occlusion, occurs in a non-linear manner if viewed over long time spans. However, if viewed over short time spans, the assumption of linear growth overestimates percent screen occlusion and hence daily through-screen velocity.

The exponential form of the occlusion model can be expressed as:

$$\frac{dO}{dt} = kO \qquad \textbf{(1)}$$

Where O represents percent occlusion (%); k is an empirical constant (1/day); and dO/dt is the derivative representing the change in occlusion as a function of time (%/day). Note that k must be greater than or equal to 0 1/day for occlusion to increase over time. Equation 1 states that the change in occlusion at any time is proportional to the amount of occlusion that is present. Integrating equation 1 yields:

$$O = O_0 e^{kt} \qquad \textbf{(2)}$$

Where O_0 is the initial screen occlusion and e is the exponential function.

The linear form of the occlusion model can be expressed as:

$$\frac{dO}{dt} = c \qquad \textbf{(3)}$$

Where c is an empirical constant (%/day). Note that c must be greater than zero for occlusion to increase over time. Equation 3 states that the rate of change in occlusion is constant over time. Integrating equation 3 yields:

$$O = ct \qquad \textbf{(4)}$$

Figure 1 shows a graphical example of the exponential occlusion model from Equation 2 where O_0 = 1%, and k = 1.416 1/day is comparison to linear approximations of the exponential model for each time interval. Note that the occlusion pattern shown in the figure is explanatory in nature and does not represent actual occlusion data. The figure shows an accelerating change in occlusion as a function of time. For instance, occlusion increases by 3% between months 0 and 1; by 13% between months 1 and 2; and 53% between months 2 and 3.

The interval from 0 to 1 month shows that the linear model (red line) slightly overestimates the "true" exponential occlusion. The same observation holds for the remaining two intervals (months 1 – 2 and months 2 – 3). It can be shown mathematically that the linear approximation will be greater than or equal to the exponential value any time c is greater than zero and k is greater than or equal to zero. These two constants must fall into these restricted ranges for any occlusion model. Therefore the linear approximation will always provide an estimate of occlusion that is greater than or equal to that provided by the exponential model.

Assumption 4: Permit Compliance can be Determined with a Linear Occlusion Model

The intent behind velocity monitoring is twofold. Most importantly, a facility must be able to demonstrate that the through-screen velocity is less than the maximum allowable velocity of 0.5 ft/s. The actual velocity has relatively little import provided that the maximum permissible velocity is not exceeded. The secondary purpose of velocity monitoring is to determine the number of days a facility was out of compliance for purposes of permit compliance reporting on the facility's discharge monitoring report. The linear occlusion model accomplishes each of these goals in a conservative manner.

Linear regression between months 2 and 3 yields the following equation to estimate percent occlusion for month 3:

$$O = 1.767t + 17 \qquad \textbf{(5)}$$

The general equation to determine the daily velocity based on percent screen occlusion is:

$$v = \frac{Q}{A_{clean} * (1 - O/100)} \qquad \textbf{(6)}$$

Where v is the through screen velocity (ft/s); Q is the measured intake flow (ft^3/s); and O is the percent occlusion. Note that O is divided by 100 to convert from percent to a fraction.

Based on Equation 5, the percent occlusion on the first day of month 3 (day 0) is 17%. Assuming an intake flow of 37.1 ft^3/s for the Aft CWIS and given A_{clean} =169.1 (see Section 1.2 of this document), the velocity on the first day of month 2 is estimated to be:

$$v = \frac{37.1 \frac{ft^3}{s}}{169.1 ft^2 * (1 - 17/100)} = 0.26 \frac{ft}{s} \qquad \textbf{(7)}$$

The calculation for each day of the month is presented on Figure 1 along with the estimates of through-screen velocity using the exponential model. The use of the linear model indicates that the facility was out of compliance for 12 days in month 3. Assuming that the exponential model represents the "true" occlusion, the facility was out of compliance for 7 days. The linear model provides a reasonable estimate of the daily intake velocity and a conservative estimate of the days that the facility was out of compliance.

Summary and Discussion of Methodology

Monthly visual monitoring of each CWIS can be used in conjunction with a linear model of percent occlusion to calculate the daily through-screen velocity of its CWIS. Although an exponential increase in percent occlusion is the most physically descriptive model of occlusion, the linear model has multiple benefits including:

- Conservative estimates of through-screen velocity. These conservative estimates serve to offset errors in the estimation of percent occlusion through visual monitoring;
- The ability to determine when the facility exceeds the maximum permissible velocity for DMR reporting purposes; and
- Ease and reproducibility of the calculations.

NPDES NOI 316(b) ADDENDUM
APPENDIX C: MONITORING METHODOLOGY
ROWAN COMPANIES INC.
RENAISSANCE DRILL SHIP

VELOCITY MONITORING IMPLEMENTATION

Velocity monitoring will be implemented through use of visual monitoring inspections of each CWIS in conjunction with the linear occlusion model. During visual inspection, the operator will follow the procedure outlined herein using the ***CK CWIS Monitoring Workbook*** (See Figure 2). The information that will be required by the operator for input includes:

- Date of occlusion estimation;
- Estimated occlusion (% blockage);
- Maximum measured daily intake flow or design intake flow; and
- Date of CWIS maintenance (if applicable).

NPDES REPORTING

The general permit requires that the intake flow velocity across the CWIS screens be monitored to ensure that the 0.5 ft/s threshold is not exceeded. Implementation of these requirements will be documented in facility records, which will be used to complete the quarter DMR.

The DMR requirements for CWIS operation may include the following:

- Participation in the Baseline Study (Yes or No);
- Participation in the Entrainment Study (Yes or No);
- Intake Inspection (Yes or No);
- Percent Screen Area Blockage (%);
- Maximum Intake Flow Velocity;
- Number of Days when Velocity is Greater than 0.5 ft/s; and
- Number of Fish/Shellfish Impinged.

The percent occlusion (referred to as screen area blockage on the DMR) that will be observed each month will be used to estimate the intake velocity across the CWIS screens. The number of days that the intake velocity is estimated to exceed the 0.5 ft/s threshold will be reported in the records kept at the facility.

Occlusion without velocity exceeding 0.5 ft/s

If the percent blockage estimated by the operator does not result in an intake velocity that exceeds the 0.5 ft/s threshold, zero days will be reported on the DMR for that month. This will be the case regardless of if the estimated blockage is due to removable debris or biological growth. Maintenance of the CWIS is not required to remove debris or clean the CWIS screens.

Occlusion due to removable debris

If the percent blockage estimated by the operator is due to debris (i.e. trash, algae, etc.) and results in an intake velocity that exceeds the 0.5 ft/s threshold, CWIS maintenance is required to remove the debris. The number of days to report on the DMR will be the number of days between the day the blockage was identified and the day the blockage was removed. However, in the event that

maintenance is unable to be performed during the current month, the number of days estimated will be those between the day the blockage was identified and the last day of the month.

Occlusion due to biological growth

If the percent blockage estimated by the operator is due to biological growth and results in an intake velocity that exceeds the 0.5 ft/s threshold, CWIS maintenance is required to clean the biological growth off of the screen. The linear occlusion model will use the percent blockage estimated during the previous month to project the velocity across the intake screens for each day during the time period, which will provide the number of days that the intake velocity exceeded 0.5 ft/s from the first day of the month to the date of maintenance.

Tabular Comparison of the Linear Model and Exponential Model to Estimate % Occlusion and Through-Screen Velocity

Day	Linear Model Percent Occlusion (%)	Exponential Model Percent Occlusion (%)	Linear Model Through-Screen Velocity (ft/s)	Exponential Model Through-Screen Velocity (ft/s)
0	17	17	0.30	0.30
1	19	18	0.31	0.30
2	21	19	0.32	0.31
3	22	20	0.32	0.31
4	24	21	0.33	0.31
5	26	21	0.34	0.32
6	28	23	0.35	0.32
7	29	24	0.35	0.33
8	31	25	0.36	0.33
9	33	26	0.37	0.34
10	35	27	0.38	0.34
11	36	29	0.39	0.35
12	38	30	0.40	0.36
13	40	31	0.42	0.36
14	42	33	0.43	0.37
15	44	34	0.45	0.38
16	45	36	0.45	0.39
17	47	38	0.47	0.40
18	49	40	0.49	0.41
19	51	42	0.51	0.43
20	52	44	0.52	0.44
21	54	46	0.54	0.46
22	56	48	0.57	0.48
23	58	50	0.60	0.50
24	59	53	0.61	0.53
25	61	55	0.64	0.56
26	63	58	0.68	0.59
27	65	61	0.71	0.64
28	66	64	0.74	0.69
29	68	67	0.78	0.75
30	70	70	0.83	0.83

Yellow shaded cells indicate days in excess of the maximum permissible through-screen velocity.

Graphical Comparison of CWIS Intake Screen Occlusion as an exponential function of time (red line) and the same data set as linear approximations of the exponential function.

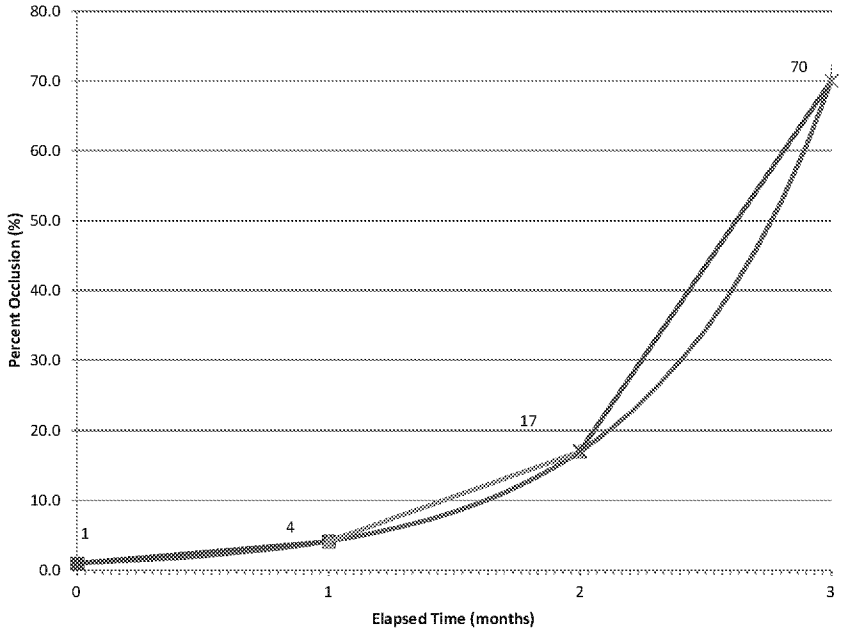

These are example measurements for explanatory purposes and do NOT represent actual measurements

ROWAN COMPANIES, INC
HOUSTON, TX

NPDES 316(b) REQURIEMENTS

CWIS MONITORING EXAMPLE USING EXPONENTIAL OCCLUSION MODEL

RENAISSANCE DRILL SHIP

CK ASSOCIATES

Drawn	SKM/PPT
Checked	JLD
Approved	JLD
Date	5/18/2015
Project No.	12386

FIGURE C-1

316(b) CWIS Velocity Reporting Log

Rowan Companies, Inc.
Relentless 204 Drill Ship

Email completed form on Sundays and at ROW to:

AREA & LEASE BLOCK:
WELL ID:
ACTIVITY (WELL) START DATE:
NPDES PERMIT #:
PERMITTED FEATURE ID:
ACTIVITY (WELL) STOP DATE:

YEAR: 2014

CWIS 1	CWIS 2	CWIS 3
Initial Estimated Blockage (%):	Initial Estimated Blockage (%):	Initial Estimated Blockage (%):
Date of First Reading:	Date of First Reading:	Date of First Reading:

CWIS 4
Initial Estimated Blockage (%):
Date of First Reading:

Month	Input Page									Maintenance Completed? (If not, leave blank)		Output Data	
	CWIS ID:	AREA (FT2):	Calendar day Performed Visual Inspection	Inspection Time	Visual Inspection Date	Calculated Blockage (%)	Due to removable debris?	Estimated Maximum Daily Flow (FT3/S)*	# of Pump/Pumps engaged	Date of Maintenance	Estimated Blockage after Maintenance (%)	Est. Max Intake Velocity (ft/s)	# Days in Excess of 0.5 ft/s Threshold
January	CWIS 1												0
January	CWIS 2												0
January	CWIS 3												0
January	CWIS 4												0
February	CWIS 1												0
February	CWIS 2												0

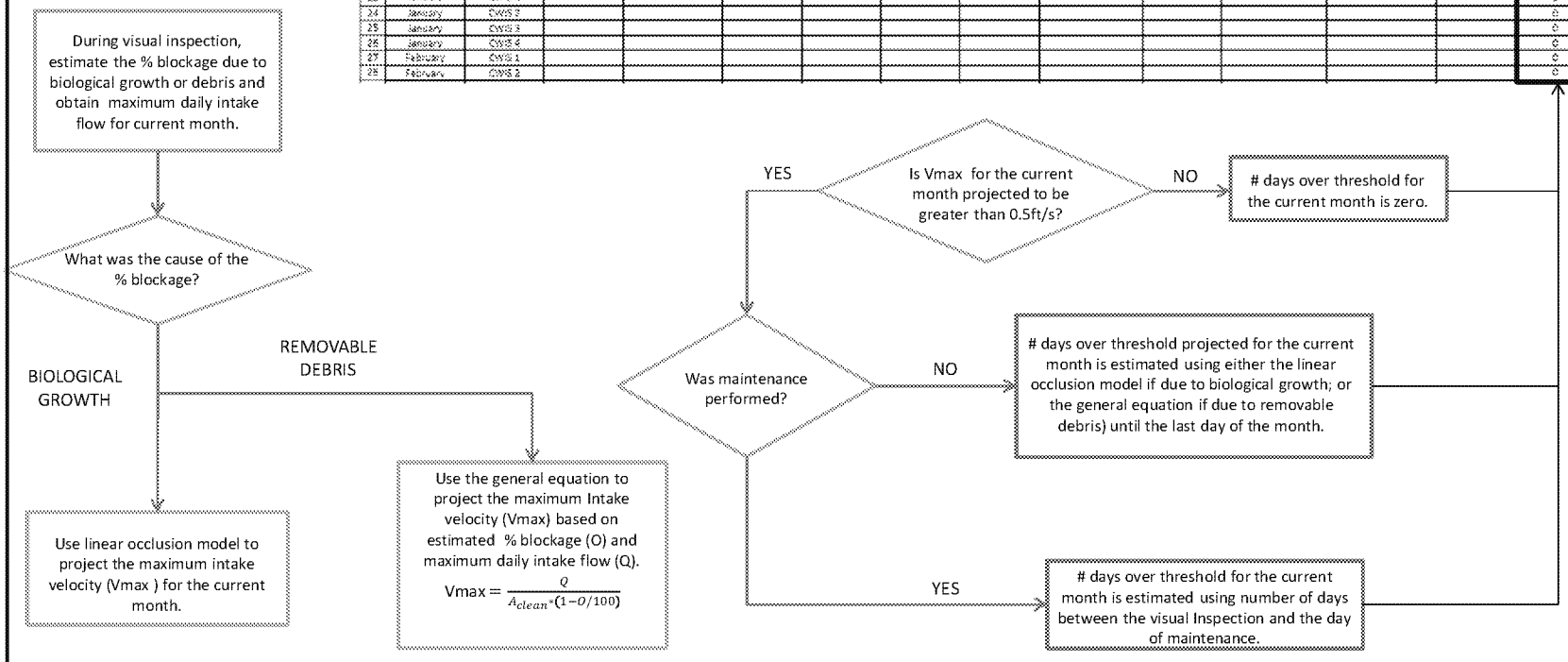

ROWAN COMPANIES, INC
HOUSTON, TX

NPDES 316(b) REQURIEMENTS

CWIS MONITORING AND REPORTING PROGRAM EXAMPLE & FLOW CHART

RENAISSANCE DRILL SHIP

CK ASSOCIATES

Drawn:	SKM/FPT
Checked:	JLD
Approved:	JLD
Date:	5/18/2015
Project No.	12386

FIGURE C-2