IDEM

INDIANA DEPARTMENT OF ENVIRONMENTAL MANAGEMENT

We Protect Hoosiers and Our Environment.

Mitchell E. Daniels, Jr.
Governor

Thomas W. Easterly
Commissioner

100 North Senate Avenue
Indianapolis, Indiana 46204
(317) 232-8603
Toll Free (800) 451-6027
www.idem.IN.gov

Via Electronic Mail

October 26, 2011

Wendell Carter, General Manager
ArcelorMittal Indiana Harbor, LLC
3001 Dickey Road
East Chicago, Indiana 46312

Dear Mr. Carter:

Re: NPDES Permit No. IN0000205
ArcelorMittal Indiana Harbor, LLC – Indiana Harbor West
East Chicago, Indiana
Lake County

Your application for a National Pollutant Discharge Elimination System (NPDES) permit for authorization to discharge into the waters of the State of Indiana has been processed in accordance with Section 402 and 405 of the Federal Water Pollution Control Act, as amended (33 U.S.C. 1251, et seq.), and IC 13-15, IDEM's permitting authority. All discharges from this facility shall be consistent with the terms and conditions of this permit.

One condition of your permit requires periodic reporting of several effluent parameters. These forms are available on the internet at the following web site:

http://www.in.gov/idem/5104.htm

Additionally, you will soon be receiving a supply of the computer generated preprinted federal NPDES DMR forms. Both the state and federal forms need to be completed and submitted on a routine basis. If you do not receive the preprinted DMR forms in a timely manner, please call this office at 317-232-8670.

Another condition which needs to be clearly understood concerns violation of the effluent limitations in the permit. Exceeding the limitations constitutes a violation of the permit and may subject the permittee to criminal or civil penalties. (See Part II A.2.) It is therefore urged that your office and treatment operator understand this part of the permit.

A response to the comments received pertaining to the draft NPDES permit is contained in the Post Public Notice Addendum. The Post Public Notice Addendum is located at the end of the Fact Sheet.

It should also be noted that any appeal must be filed under procedures outlined in IC 13-15-6, IC 4-21.5, and the enclosed Public Notice. The appeal must be initiated by filing a petition for administrative review with the Office of Environmental Adjudication (OEA) within eighteen (18) days of the mailing of this letter by filing at the following address:

Office of Environmental Adjudication
Indiana Government Center North
100 North Senate Avenue, Room 501
Indianapolis, IN 46204

Please send a copy of any written appeal to me at the IDEM, Office of Water Quality - Mail Code 65-42, 100 North Senate Avenue, Indianapolis, Indiana 46204-2251.

If you have any questions concerning the permit, please contact Richard Hamblin at 317/232-8696. Questions concerning appeal procedures should be directed to the Office of Environmental Adjudication, at 317/232-8591.

Sincerely,

Bruno Pigott
Assistant Commissioner
Office of Water Quality

Enclosures
cc: U.S. EPA, Region V
Lake County Health Department
IDEM Northwest Regional Office

INDEX
for
ArcelorMittal Indiana Harbor West NPDES Permit IN0000205

PART I.

A. Effluent Limitations and Monitoring Requirements....2
- Outfall 002....2
- Outfall 009....5
- Internal Outfall 509....8
- Outfall 010....9
- Outfall 011....12
- Internal Outfall 701....15
- Internal Outfall 702....16
- Outfall 012....17
- Internal Outfall 111....19
- Internal Outfall 211....20
- Internal Outfall 411....21

B. Narrative Water Quality Standards....21

C. Monitoring and Reporting
- 1. Representative Sampling....22
- 2. Discharge Monitoring Reports....22
- 3. Definitions....23
- 4. Test Procedures....25
- 5. Recording of Results....26
- 6. Additional Monitoring by Permittee....26
- 7. Records Retention....26

D. Storm Water Monitoring and Non Numeric Conditions....27-37

E. Storm Water Pollution Prevention Plan....37-44

F. Schedule of Compliance for Mercury....44-47

G. Pollutant Minimization Program....47

H. Chronic Biomonitoring Program Requirements....49-55

I. Free Cyanide and Fluoride....55

J. Reopening Clauses....55

PART II STANDARD CONDITIONS FOR NPDES PERMITS

A. General Conditions
- 1. Duty to Comply....58
- 2. Duty to Mitigate....58
- 3. Duty to Reapply....58
- 4. Permit Transfers....59
- 5. Permit Actions....59
- 6. Property Rights....60
- 7. Severability....60
- 8. Oil and Hazardous Substance Liability....61
- 9. State Laws....61
- 10. Penalties for Violation of Permit Conditions....61

ED_002857_00000137-00003

11. Penalties for Tampering or Falsification.....61
12. Toxic Pollutants.....62
13. Wastewater treatment plant and certified operators.....62
14. Construction Permits.....63
15. Inspection and Entry 63
16. New or Increased Discharge of Pollutants.....63
B. Management Requirements
1. Proper Operation and Maintenance.....64
2. Bypass of Treatment Facilities.....64
3. Upset Conditions.....66
4. Removed Substances 67
C. Reporting Requirements
1. Planned Changes in Facility or Discharge.....67
2. Monitoring Reports.....68
3. Twenty-Four Hour Reporting Requirements.....68
4. Other Noncompliance.....69
5. Other Information.....69
6. Signatory Requirements.....69
7. Availability of Reports.....70
8. Penalties for Falsifications of Reports.....70
9. Changes in Discharges of Toxic Substances.....71

PART III OTHER REQUIREMENTS
A. Thermal Effluent Requirements.....73
B. Biocides Concentration.....74
C. Polychlorinated Biphenyl.....74

PART IV COOLING WATER INTAKE STRUCTURES
1. Introduction.....75
2. Monitoring Requirements.....75
3. Changes During Term of Permit.....78
4. Intake Screen Wash.....78
5. Fish Return Evaluation.....78

ED_002857_00000137-00004

STATE OF INDIANA

DEPARTMENT OF ENVIRONMENTAL MANAGEMENT

AUTHORIZATION TO DISCHARGE UNDER THE

NATIONAL POLLUTANT DISCHARGE ELIMINATION SYSTEM

In compliance with the provisions of the Federal Water Pollution Control Act, as amended, (33 U.S.C. 1251 et seq., the "Act"), and IDEM's authority under IC13-15,

ARCELORMITTAL INDIANA HARBOR, LLC - INDIANA HARBOR WEST

is authorized to discharge from the steel mill that is located at 3001 Dickey Road, East Chicago, Indiana, to receiving waters named Indiana Harbor Ship Canal, Indiana Harbor and Lake Michigan in accordance with effluent limitations, monitoring requirements, and other conditions set forth in Parts I, II, III, and IV hereof. This permit may be revoked for the nonpayment of applicable fees in accordance with IC 13-18-20.

Effective Date: December 1, 2011

Expiration Date: November 30, 2016

In order to receive authorization to discharge beyond the date of expiration, the permittee shall submit such information and forms as are required by the Indiana Department of Environmental Management no later than 180 days prior to the date of expiration.

Signed on October 26, 2011 for the Indiana Department of Environmental Management.

Bruno Pigott
Assistant Commissioner
Office of Water Quality

PART I

A. EFFLUENT LIMITATIONS AND MONITORING REQUIREMENTS

1. The permittee is authorized to discharge from the outfall listed below in accordance with the terms and conditions of this permit. The permittee is authorized to discharge from Outfall 002. The discharge is limited to storm water, ground water from basement sumps, and non-contact cooling wastewater from the pickling and hot-dip galvanizing lines. Samples taken in compliance with the monitoring requirements below shall be taken at a point representative of the discharge but prior to entry into the Indiana Harbor Ship Canal. Such discharge shall be limited and monitored by the permittee as specified below:

DISCHARGE LIMITATIONS[1][2][3][13]

Table 1

	Quantity or Loading			Quality or Concentration			Monitoring	Requirements
Parameter	Monthly Average	Daily Maximum	Units	Monthly Average	Daily Maximum	Units	Measurement Frequency	Sample Type
Flow	Report	Report	MGD	-------	-------	-----	1 X Weekly	24 Hour Total
TSS	Report	Report	lbs/day	Report	Report	mg/l	1 X Weekly	24-Hr. Comp.
O+G	Report	Report	lbs/day	Report	Report	mg/l	1 X Weekly	Grab
TRC[4][12]	1.5	3.5[6]	lbs/day	0.016[5]	0.037[6]	mg/l	5 X Weekly[7]	Grab
Mercury[4][9][10]								
Interim	Report	Report	lbs/day	Report	Report	ng/l	6 X Yearly[8]	Grab
Final	0.00012	0.00030	lbs/day	1.3	3.2	ng/l	6 X Yearly[8]	Grab
Temperature[11]								
Intake	-------	--------	------	Report	Report	°F	2 X Weekly	Grab
Outfall	-------	--------	------	Report	Report	°F	2 X Weekly	Grab
Thermal Discharge	Report	Report	MBTU/Hr.	-------	--------	----	2 X Weekly	Report

Table 2

	Quality or Concentration			Monitoring	Requirements
Parameter	Daily Minimum	Daily Maximum	Units	Measurement Frequency	Sample Type
pH	6.0	9.0	s.u.	1 X Weekly	Grab

[1] See Part I.B. of the permit for the Narrative Water Quality Standards.

[2] In the event that changes are to be made in the use of water treatment additives that could significantly change the nature of, or increase the discharge concentration of the additive to Outfall 002, the permittee shall notify the Indiana Department of Environmental Management as required in Part II.C.1 of this permit. The use of any new or changed water treatment additives or dosage rates shall not cause the discharge from any permitted outfall to exhibit chronic or acute toxicity. Acute and chronic aquatic toxicity information must be provided

with any notification regarding any new or changed water treatment additives or dosage rates.

[3] The Storm Water Monitoring and Non Numeric Effluent Limits and the Storm Water Pollution Prevention Plan (SWP3) requirements can be found in Part I.D. and I.E of this permit

[4] Case-Specific LOD/LOQ
The permittee may determine a case-specific LOD or LOQ using the analytical method specified below, or any other test method which is approved by the Commissioner prior to use. The LOD shall be derived by the procedure specified for method detection limits contained in 40 CFR Part 136, Appendix B, and the LOQ shall be set equal to 3.18 times the LOD. Other methods may be used if first approved by the Commissioner.

The following EPA test methods and/or Standard Methods and associated LODs and LOQs are to be used in the analysis of the effluent samples. Alternative methods may be used if first approved by IDEM.

Parameter	Test Method	LOD	LOQ
Chlorine	4500-Cl-D,E or 4500-Cl-G	0.02 mg/l	0.06 mg/l
Mercury	1631, Revision E	0.2 ng/l	0.5 ng/l

[5] The monthly average water quality based effluent limit (WQBEL) for total residual chlorine is less than the limit of quantitation (LOQ) as specified below. Compliance with the monthly average limit will be demonstrated if the monthly average effluent level is less than or equal to the monthly average WQBEL. Daily effluent values that are less than the LOQ, used to determine the monthly average effluent levels less than the LOQ, may be assigned a value of zero (0), unless, after considering the number of monitoring results that are greater than the limit of detection (LOD), and applying appropriate statistical techniques, a value other than zero (0) is warranted.

[6] The daily maximum WQBEL for chlorine is greater than or equal to the LOD but less than the LOQ as specified below. Compliance with the daily maximum limit will be demonstrated if the observed effluent concentrations are less than the LOQ. Compliance with the daily maximum mass value will be demonstrated if the calculated mass value is less than 5.6 lbs/day.

[7] Monitoring for TRC shall be performed, at a minimum, during Zebra or Quagga mussel intake chlorination, and continue for three additional days after Zebra or Quagga mussel treatment has been completed.

[8] Mercury monitoring shall be conducted bi-monthly in the months of February, April, June, August, October, and December of each year for the term of the permit using EPA Test Method 1631, Revision E.

[9] The permittee shall measure and report the identified metals as total recoverable metals.

[10] The permittee has a 54 month schedule of compliance as outlined in Part I.F in which to meet the final effluent limitations for Mercury.

[11] See Part III of this permit for additional requirements.

[12] See Part I.G for the Pollutant Minimization Program requirements.

[13] ArcelorMittal shall install the equipment necessary to accurately measure the discharge flow from Outfall 002 and to facilitate taking samples that are representative of the discharge within one year after the effective date of this permit. During the period of time before the necessary equipment is installed, ArcelorMittal may estimate the 24 Hour total flow volume from Outfall 002.

2. The permittee is authorized to discharge from the outfall listed below in accordance with the terms and conditions of this permit. The permittee is authorized to discharge from Outfall 009. The discharge is limited to storm water, ground water from basement sumps, and non-contact cooling wastewater from the powerhouse area as well as treated blast furnace and sinter plant blowdown via Internal Outfall 509. Samples taken in compliance with the monitoring requirements below shall be taken at a point representative of the discharge but prior to entry into the Indiana Harbor Ship Canal. Such discharge shall be limited and monitored by the permittee as specified below:

DISCHARGE LIMITATIONS[1][2][3]

Table 1

	Quantity or Loading			Quality or Concentration			Monitoring	Requirements
Parameter	Monthly Average	Daily Maximum	Units	Monthly Average	Daily Maximum	Units	Measurement Frequency	Sample Type
Flow	Report	Report	MGD	-------	-------	-----	1 X Weekly	24 Hour Total
TSS	Report	Report	lbs/day	Report	Report	mg/l	1 X Weekly	24-Hr. Comp.
O+G	Report	Report	lbs/day	Report	Report	mg/l	1 X Weekly	Grab
TRC[4][13]	5.5	13[6]	lbs/day	0.012[5]	0.028[6]	mg/l	5 X Weekly[7]	Grab
Ammonia, as N[14]	425	1000	lbs/day	Report	Report	mg/l	1 X Weekly[15]	24-Hr. Comp.
Phenols (4AAP)[14]	Report	11	lbs/day	Report	Report	mg/l	1 X Weekly[15]	Grab
Zinc[8]	Report	Report	lbs/day	Report	Report	ug/l	1 X Weekly	24-Hr. Comp.
Lead[8]	Report	Report	lbs/day	Report	Report	ug/l	1 X Weekly	24-Hr. Comp.
Mercury[4][8][10]								
Interim	Report	Report	lbs/day	Report	Report	ng/l	6 X Yearly[9]	Grab
Final	0.00060	0.0015	lbs/day	1.3	3.2	ng/l	6 X Yearly[9]	Grab
Temperature[12]								
Intake	-------	--------	------	Report	Report	°F	2 X Weekly	Grab
Outfall	-------	--------	------	Report	Report	°F	2 X Weekly	Grab
Thermal								
Discharge	Report	Report	MBTU/Hr.	-------	--------	----	2 X Weekly	Report
Whole Effluent Toxicity Testing[11]								

Table 2

	Quality or Concentration			Monitoring	Requirements
Parameter	Daily Minimum	Daily Maximum	Units	Measurement Frequency	Sample Type
pH	6.0	9.0	s.u.	1 X Weekly	Grab

[1] See Part I.B. of the permit for the Narrative Water Quality Standards.

[2] In the event that changes are to be made in the use of water treatment additives that could significantly change the nature of, or increase the discharge concentration of the additive to Outfall 009, the permittee shall notify the Indiana Department of Environmental Management as required in Part II.C.1 of this permit. The use of any new or changed water treatment additives or dosage rates shall not cause the discharge from any permitted outfall to exhibit chronic or acute toxicity. Acute and chronic aquatic toxicity information must be provided

with any notification regarding any new or changed water treatment additives or dosage rates.

[3] The Storm Water Monitoring and Non Numeric Effluent Limits and the Storm Water Pollution Prevention Plan (SWP3) requirements can be found in Part I.D. and I.E of this permit

[4] Case-Specific LOD/LOQ

The permittee may determine a case-specific LOD or LOQ using the analytical method specified below, or any other test method which is approved by the Commissioner prior to use. The LOD shall be derived by the procedure specified for method detection limits contained in 40 CFR Part 136, Appendix B, and the LOQ shall be set equal to 3.18 times the LOD. Other methods may be used if first approved by the Commissioner.

The following EPA test methods and/or Standard Methods and associated LODs and LOQs are to be used in the analysis of the effluent samples. Alternative methods may be used if first approved by IDEM.

Parameter	Test Method	LOD	LOQ
Chlorine	4500-Cl-D,E or 4500-Cl-G	0.02 mg/l	0.06 mg/l
Mercury	1631, Revision E	0.2 ng/l	0.5 ng/l

[5] The monthly average water quality based effluent limit (WQBEL) for total residual chlorine is less than the limit of quantitation (LOQ) as specified below. Compliance with the monthly average limit will be demonstrated if the monthly average effluent level is less than or equal to the monthly average WQBEL. Daily effluent values that are less than the LOQ, used to determine the monthly average effluent levels less than the LOQ, may be assigned a value of zero (0), unless, after considering the number of monitoring results that are greater than the limit of detection (LOD), and applying appropriate statistical techniques, a value other than zero (0) is warranted.

[6] The daily maximum WQBEL for chlorine is greater than or equal to the LOD but less than the LOQ as specified below. Compliance with the daily maximum limit will be demonstrated if the observed effluent concentrations are less than the LOQ. Compliance with the daily maximum mass value will be demonstrated if the calculated mass value is less than 27.7 lbs/day.

[7] Monitoring for TRC shall be performed, at a minimum, during Zebra or Quagga mussel intake chlorination, and continue for three additional days after Zebra or Quagga mussel treatment has been completed.

[8] The permittee shall measure and report the identified metals as total recoverable metals.

[9] Mercury monitoring shall be conducted bi-monthly in the months of February, April, June, August, October, and December of each year for the term of the permit using EPA Test Method 1631, Revision E.

[10] The permittee has a 54 month schedule of compliance as outlined in Part I.F in which to meet the final effluent limitations for Mercury.

[11] The permittee shall initiate a biomonitoring program for Outfall 009 using the procedures contained under Part I.H. of this permit.

[12] See Part III of this permit for additional requirements.

[13] See Part I.G for the Pollutant Minimization Program requirements.

[14] Ammonia (as N) and Phenols (4AAP) shall be reported on a net basis. For the purpose of this permit, net values are to be calculated by subtracting the measured intake values from the measured effluent values. The intake water shall be sampled for ammonia and phenols at the same frequency and sample type as the discharge waters. Samples shall be taken at a point representative of the intake prior to any contamination of the influent by recycled wastewater. The intake water shall be monitored at pumping stations 1 and 2.

[15] Sampling for Ammonia (as N) and Phenols (4AAP) shall occur at the monitoring frequencies specified in the permit on the same day at Outfalls 009, 010, 011, and 509.

3. The permittee is authorized to discharge from the outfall listed below in accordance with the terms and conditions of this permit. The permittee is authorized to discharge from Internal Outfall 509. The discharge is limited to treated blast furnace and sinter plant blowdown. Samples taken in compliance with the monitoring requirements below shall be taken at a point representative of the discharge but prior to mixing with other wastestreams contributing to Outfall 009. Such discharge shall be limited and monitored by the permittee as specified below:

DISCHARGE LIMITATIONS

Table 1

	Quantity or Loading			Quality or Concentration			Monitoring Requirements	
Parameter	Monthly Average	Daily Maximum	Units	Monthly Average	Daily Maximum	Units	Measurement Frequency	Sample Type
Flow	Report	Report	MGD	-------	-------	-----	2 X Weekly	24 Hour Total
TSS	736	2,213	lbs/day	Report	Report	mg/l	2 X Weekly	24-Hr. Comp.
O+G	38.1	114	lbs/day	Report	Report	mg/l	2 X Weekly[1]	Grab
T. Cyanide[2]	29.8	59.6	lbs/day	Report	Report	mg/l	2 X Weekly	Grab
Ammonia, as N	Report	Report	lbs/day	Report	Report	mg/l	1 X Weekly[4]	24-Hr. Comp.
Phenols (4AAP)	Report	Report	lbs/day	Report	Report	mg/l	1 X Weekly[4]	Grab.
Zinc[2]	4.46	13.4	lbs/day	Report	Report	ug/l	2 X Weekly	24-Hr. Comp.
Lead[2]	2.98	8.95	lbs/day	Report	Report	ug/l	2 X Weekly	24-Hr. Comp.
2,3,7,8-TCDF	-------	---------	------	-------	<ML[3]	pg/l	1 X Monthly[1]	24-Hr. Comp.

[1] Effluent limits and monitoring requirements for oil and grease and 2,3,7,8-TCDF shall not be applicable during those months when the sinter plant is not operated. Operation of the sinter plant for anytime during a calendar month shall require monitoring.

[2] The permittee shall measure and report the identified metals as total recoverable metals.

[3] The limitation and standard for 2,3,7,8 – tetrachlorodibenzofuran (2,3,7,8 – TCDF) is expressed as less than the Minimum Level ("<ML"). The term Minimum Level (ML) means the level at which the analytical system gives recognizable signals and an acceptable calibration point. For 2,3,7,8 – TCDF, the minimum level is 10 pg/l per EPA Method 1613B for water and wastewater samples. The term pg/L means picograms per liter (ppq = 1.0×10^{-12} gram/L).

[4] Sampling for Ammonia (as N) and Phenols (4AAP) shall occur at the monitoring frequencies specified in the permit on the same day at Outfalls 009, 010, 011, and 509.

4. The permittee is authorized to discharge from the outfall listed below in accordance with the terms and conditions of this permit. The permittee is authorized to discharge from Outfall 010. The discharge is limited to storm water, ground water from basement sumps, and non-contact cooling wastewater from the blast furnace area, sinter plant area, powerhouse area, and boiler house as well as emergency overflow from Outfall 009. Samples taken in compliance with the monitoring requirements below shall be taken at a point representative of the discharge but prior to entry into the Indiana Harbor Ship Canal. Such discharge shall be limited and monitored by the permittee as specified below:

DISCHARGE LIMITATIONS[1][2][12]

Table 1

	Quantity or Loading			Quality or Concentration			Monitoring	Requirements
Parameter	Monthly Average	Daily Maximum	Units	Monthly Average	Daily Maximum	Units	Measurement Frequency	Sample Type
Flow	Report	Report	MGD	-------	-------	-----	1 X Weekly	24 Hour Total
TSS	Report	Report	lbs/day	Report	Report	mg/l	1 X Weekly	24-Hr. Comp.
O+G	Report	Report	lbs/day	Report	Report	mg/l	1 X Weekly	Grab
TRC[3][11]	3.7	8.6[5]	lbs/day	0.012[4]	0.028[5]	mg/l	5 X Weekly[6]	Grab
Ammonia, as N[13]	100	300	lbs/day	Report	Report	mg/l	1 X Weekly[14]	24-Hr. Comp.
Phenols (4AAP)[13]	Report	5	lbs/day	Report	Report	mg/l	1 X Weekly[14]	Grab
Zinc[7]	Report	Report	lbs/day	Report	Report	ug/l	1 X Weekly	24-Hr. Comp.
Lead[7]	Report	Report	lbs/day	Report	Report	ug/l	1 X Weekly	24-Hr. Comp.
Mercury[3][7][9]								
Interim	Report	Report	lbs/day	Report	Report	ng/l	6 X Yearly[8]	Grab
Final	0.00040	0.00098	lbs/day	1.3	3.2	ng/l	6 X Yearly[8]	Grab
Temperature[10]								
Intake	-------	--------	------	Report	Report	°F	2 X Weekly	Grab
Outfall	-------	--------	------	Report	Report	°F	2 X Weekly	Grab
Thermal Discharge	Report	Report	MBTU/Hr.	-------	--------	----	2 X Weekly	Report

Table 2

	Quality or Concentration			Monitoring	Requirements
Parameter	Daily Minimum	Daily Maximum	Units	Measurement Frequency	Sample Type
pH	6.0	9.0	s.u.	1 X Weekly	Grab

[1] See Part I.B. of the permit for the Narrative Water Quality Standards.

[2] In the event that changes are to be made in the use of water treatment additives that could significantly change the nature of, or increase the discharge concentration of the additive to Outfall 010, the permittee shall notify the Indiana Department of Environmental Management as required in Part II.C.1 of this permit. The use of any new or changed water treatment additives or dosage rates shall not cause the discharge from any permitted outfall to exhibit chronic or acute toxicity. Acute and chronic aquatic toxicity information must be provided

with any notification regarding any new or changed water treatment additives or dosage rates.

[3] Case-Specific LOD/LOQ
The permittee may determine a case-specific LOD or LOQ using the analytical method specified below, or any other test method which is approved by the Commissioner prior to use. The LOD shall be derived by the procedure specified for method detection limits contained in 40 CFR Part 136, Appendix B, and the LOQ shall be set equal to 3.18 times the LOD. Other methods may be used if first approved by the Commissioner.

The following EPA test methods and/or Standard Methods and associated LODs and LOQs are to be used in the analysis of the effluent samples. Alternative methods may be used if first approved by IDEM.

Parameter	Test Method	LOD	LOQ
Chlorine	4500-Cl-D,E or 4500-Cl-G	0.02 mg/l	0.06 mg/l
Mercury	1631, Revision E	0.2 ng/l	0.5 ng/l

[4] The monthly average water quality based effluent limit (WQBEL) for total residual chlorine is less than the limit of quantitation (LOQ) as specified below. Compliance with the monthly average limit will be demonstrated if the monthly average effluent level is less than or equal to the monthly average WQBEL. Daily effluent values that are less than the LOQ, used to determine the monthly average effluent levels less than the LOQ, may be assigned a value of zero (0), unless, after considering the number of monitoring results that are greater than the limit of detection (LOD), and applying appropriate statistical techniques, a value other than zero (0) is warranted.

[5] The daily maximum WQBEL for chlorine is greater than or equal to the LOD but less than the LOQ as specified below. Compliance with the daily maximum limit will be demonstrated if the observed effluent concentrations are less than the LOQ. Compliance with the daily maximum mass value will be demonstrated if the calculated mass value is less than 18.3 lbs/day.

[6] Monitoring for TRC shall be performed, at a minimum, during Zebra or Quagga mussel intake chlorination, and continue for three additional days after Zebra or Quagga mussel treatment has been completed.

[7] The permittee shall measure and report the identified metals as total recoverable metals.

[8] Mercury monitoring shall be conducted bi-monthly in the months of February, April, June, August, October, and December of each year for the term of the permit using EPA Test Method 1631, Revision E.

[9] The permittee has a 54 month schedule of compliance as outlined in Part I.F in which to meet the final effluent limitations for Mercury.

[10] See Part III of this permit for additional requirements.

[11] See Part I.G for the Pollutant Minimization Program requirements.

[12] The Storm Water Monitoring and Non Numeric Effluent Limits and the Storm Water Pollution Prevention Plan (SWP3) requirements can be found in Part I.D. and I.E of this permit

[13] Ammonia (as N) and Phenols (4AAP) shall be reported on a net basis. For the purpose of this permit, net values are to be calculated by subtracting the measured intake values from the measured effluent values. The intake water shall be sampled for ammonia and phenols at the same frequency and sample type as the discharge waters. Samples shall be taken at points representative of the intake prior to any contamination of the influent by recycled wastewater. The intake water shall be monitored at pumping stations 1 and 2.

[14] Sampling for Ammonia (as N) and Phenols (4AAP) shall occur at the monitoring frequencies specified in the permit on the same day at Outfalls 009, 010, 011, and 509.

5. The permittee is authorized to discharge from the outfall listed below in accordance with the terms and conditions of this permit. The permittee is authorized to discharge from Outfall 011. The discharge is limited to storm water, ground water from basement sumps, vacuum degassing (Internal Outfall 701), continuous casting (Internal Outfall 702), and on-site oil processing facility process wastewaters, boiler house wastewater, vacuum truck decant as well as non-contact cooling water serving the basic oxygen furnace, vacuum degasser, and continuous caster. Samples taken in compliance with the monitoring requirements below shall be taken at a point representative of the discharge but prior to entry into the Indiana Harbor Ship Canal. Such discharge shall be limited and monitored by the permittee as specified below:

DISCHARGE LIMITATIONS[1][2][13]

Table 1

	Quantity or Loading			Quality or Concentration			Monitoring Requirements	
Parameter	Monthly Average	Daily Maximum	Units	Monthly Average	Daily Maximum	Units	Measurement Frequency	Sample Type
Flow	Report	Report	MGD	-------	-------	-----	1 X Weekly	24 Hour Total
TSS	Report	Report	lbs/day	Report	Report	mg/l	1 X Weekly	24-Hr. Comp.
O+G	Report	Report	lbs/day	Report	Report	mg/l	1 X Weekly	Grab
TRC[3][12]	2.5	5.9[5]	lbs/day	0.013[4]	0.030[5]	mg/l	5 X Weekly[6]	Grab
Ammonia, as N[14]	75	150	lbs/day	Report	Report	mg/l	1 X Weekly[15]	24-Hr. Comp.
Phenols (4AAP)[14]	Report	5	lbs/day	Report	Report	mg/l	1 X Weekly[15]	Grab
Zinc[7]	Report	Report	lbs/day	Report	Report	ug/l	1 X Monthly	24-Hr. Comp.
Lead[7]	Report	Report	lbs/day	Report	Report	ug/l	1 X Weekly	24-Hr. Comp.
Mercury[3][7][10]								
Interim	Report	Report	lbs/day	Report	Report	ng/l	6 X Yearly[8]	Grab
Final	0.00025	0.00062	lbs/day	1.3	3.2	ng/l	6 X Yearly[8]	Grab
Temperature[11]								
Intake	-------	--------	------	Report	Report	°F	2 X Weekly	Grab
Outfall	-------	--------	------	Report	Report	°F	2 X Weekly	Grab
Thermal								
Discharge	Report	Report	MBTU/Hr.	-------	--------	----	2 X Weekly	Report
Whole Effluent Toxicity Testing[9]								

Table 2

	Quality or Concentration			Monitoring Requirements	
Parameter	Daily Minimum	Daily Maximum	Units	Measurement Frequency	Sample Type
pH	6.0	9.0	s.u.	1 X Weekly	Grab

[1] See Part I.B. of the permit for the Narrative Water Quality Standards.

[2] In the event that changes are to be made in the use of water treatment additives that could significantly change the nature of, or increase the discharge concentration of the additive to Outfall 011, the permittee shall notify the Indiana Department of Environmental Management as required in Part II.C.1 of this

permit. The use of any new or changed water treatment additives or dosage rates shall not cause the discharge from any permitted outfall to exhibit chronic or acute toxicity. Acute and chronic aquatic toxicity information must be provided with any notification regarding any new or changed water treatment additives or dosage rates.

[3] Case-Specific LOD/LOQ

The permittee may determine a case-specific LOD or LOQ using the analytical method specified below, or any other test method which is approved by the Commissioner prior to use. The LOD shall be derived by the procedure specified for method detection limits contained in 40 CFR Part 136, Appendix B, and the LOQ shall be set equal to 3.18 times the LOD. Other methods may be used if first approved by the Commissioner.

The following EPA test methods and/or Standard Methods and associated LODs and LOQs are to be used in the analysis of the effluent samples. Alternative methods may be used if first approved by IDEM.

Parameter	Test Method	LOD	LOQ
Chlorine	4500-Cl-D,E or 4500-Cl-G	0.02 mg/l	0.06 mg/l
Mercury	1631, Revision E	0.2 ng/l	0.5 ng/l

[4] The monthly average water quality based effluent limit (WQBEL) for total residual chlorine is less than the limit of quantitation (LOQ) as specified below. Compliance with the monthly average limit will be demonstrated if the monthly average effluent level is less than or equal to the monthly average WQBEL. Daily effluent values that are less than the LOQ, used to determine the monthly average effluent levels less than the LOQ, may be assigned a value of zero (0), unless, after considering the number of monitoring results that are greater than the limit of detection (LOD), and applying appropriate statistical techniques, a value other than zero (0) is warranted.

[5] The daily maximum WQBEL for chlorine is greater than or equal to the LOD but less than the LOQ as specified below. Compliance with the daily maximum limit will be demonstrated if the observed effluent concentrations are less than the LOQ. Compliance with the daily maximum mass value will be demonstrated if the calculated mass value is less than 11.7 lbs/day.

[6] Monitoring for TRC shall be performed, at a minimum, during Zebra or Quagga mussel intake chlorination, and continue for three additional days after Zebra or Quagga mussel treatment has been completed.

[7] The permittee shall measure and report the identified metals as total recoverable metals.

[8] Mercury monitoring shall be conducted bi-monthly in the months of February, April, June, August, October, and December of each year for the term of the permit using EPA Test Method 1631, Revision E.

[9] The permittee shall initiate a biomonitoring program for Outfall 011 using the procedures contained under Part I.H. of this permit.

[10] The permittee has a 54 month schedule of compliance as outlined in Part I.F in which to meet the final effluent limitations for Mercury.

[11] See Part III of this permit for additional requirements.

[12] See Part I.G for the Pollutant Minimization Program requirements.

[13] The Storm Water Monitoring and Non Numeric Effluent Limits and the Storm Water Pollution Prevention Plan (SWP3) requirements can be found in Part I.D. and I.E of this permit

[14] Ammonia (as N) and Phenols (4AAP) shall be reported on a net basis. For the purpose of this permit, net values are to be calculated by subtracting the measured intake values from the measured effluent values. The intake water shall be sampled for ammonia and phenols at the same frequency and sample type as the discharge waters. Samples shall be taken at points representative of the intake prior to any contamination of the influent by recycled wastewater. The intake water shall be monitored at pumping stations 1 and 2.

[15] Sampling for Ammonia (as N) and Phenols (4AAP) shall occur at the monitoring frequencies specified in the permit on the same day at Outfalls 009, 010, 011, and 509.

6. The permittee is authorized to discharge from the outfall listed below in accordance with the terms and conditions of this permit. The permittee is authorized to discharge from Internal Outfall 701. The discharge is limited to treated vacuum degasser wastewater. Samples taken in compliance with the monitoring requirements below shall be taken at a point representative of the discharge but prior to mixing with other wastestreams contributing to Outfall 011. Such discharge shall be limited and monitored by the permittee as specified below:

DISCHARGE LIMITATIONS

Table 1

	Quantity or Loading			Quality or Concentration			Monitoring Requirements	
Parameter	Monthly Average	Daily Maximum	Units	Monthly Average	Daily Maximum	Units	Measurement Frequency	Sample Type
Flow	Report	Report	MGD	-------	-------	-----	2 X Weekly	24 Hour Total
TSS	21.2[1]	59.4[1]	lbs/day	Report[1]	Report[1]	mg/l	2 X Weekly	24-Hr. Comp.
Zinc[2]	0.382[1]	1.15[1]	lbs/day	Report[1]	Report[1]	ug/l	2 X Weekly	24-Hr. Comp.
Lead[2]	0.255[1]	0.764[1]	lbs/day	Report[1]	Report[1]	ug/l	2 X Weekly	24-Hr. Comp.

[1] The above identified effluent limitations are only applicable when the discharge does not get directed to the BOF and discharges through Internal Outfall 701.

[2] The permittee shall measure and report the identified metals as total recoverable metals.

7. The permittee is authorized to discharge from the outfall listed below in accordance with the terms and conditions of this permit. The permittee is authorized to discharge from Internal Outfall 702. The discharge is limited to treated continuous casting wastewater. Samples taken in compliance with the monitoring requirements below shall be taken at a point representative of the discharge but prior to mixing with other wastestreams contributing to Outfall 011. Such discharge shall be limited and monitored by the permittee as specified below:

DISCHARGE LIMITATIONS

Table 1

	Quantity or Loading			Quality or Concentration			Monitoring Requirements	
Parameter	Monthly Average	Daily Maximum	Units	Monthly Average	Daily Maximum	Units	Measurement Frequency	Sample Type
Flow	Report	Report	MGD	-------	-------	-----	2 X Weekly	24 Hour Total
TSS	60.3[1]	169[1]	lbs/day	Report[1]	Report[1]	mg/l	2 X Weekly	24-Hr. Comp.
O+G	24.0[1]	72.4[1]	lbs/day	Report[1]	Report[1]	mg/l	2 X Weekly	Grab
Zinc[2]	1.08[1]	3.26[1]	lbs/day	Report[1]	Report[1]	ug/l	2 X Weekly	24-Hr. Comp.
Lead[2]	0.724[1]	2.17[1]	lbs/day	Report[1]	Report[1]	ug/l	2 X Weekly	24-Hr. Comp.

[1] The above identified effluent limitations are only applicable when the discharge does not get directed to the BOF and discharges through Internal Outfall 702.

[2] The permittee shall measure and report the identified metals as total recoverable metals.

8. The permittee is authorized to discharge from the outfall listed below in accordance with the terms and conditions of this permit. The permittee is authorized to discharge from Outfall 012. The discharge is limited to storm water, ground water from basement sumps, noncontact cooling water, and process wastewater from Internal Outfalls 111 and 211. Samples taken in compliance with the monitoring requirements below shall be taken at a point representative of the discharge but prior to entry into Lake Michigan. Such discharge shall be limited and monitored by the permittee as specified below:

DISCHARGE LIMITATIONS[1][2][11]

Table 1

	Quantity or Loading			Quality or Concentration			Monitoring	Requirements
Parameter	Monthly Average	Daily Maximum	Units	Monthly Average	Daily Maximum	Units	Measurement Frequency	Sample Type
Flow	Report	Report	MGD	-------	-------	-----	1 X Weekly	24 Hour Total
TSS	Report	Report	lbs/day	Report	Report	mg/l	1 X Weekly	24-Hr. Comp.
O+G	Report	Report	lbs/day	Report	Report	mg/l	1 X Weekly	Grab
Vanadium[4]	13	26	lbs/day	0.022	0.044	mg/l	1 X Weekly	24-Hr. Comp.
Ammonia, as N	Report	Report	lbs/day	Report	Report	mg/l	1 X Weekly	24-Hr. Comp.
Zinc[4]	76	150	lbs/day	130	260	ug/l	1 X Weekly	24-Hr. Comp.
Lead[4]	Report	Report	lbs/day	Report	Report	ug/l	1 X Weekly	24-Hr. Comp.
Mercury[3][4]	Report	Report	lbs/day	Report	Report	ng/l	6 X Yearly[5]	Grab
TRC[3][9]	5.8	12[7]	lbs/day	0.010[6]	0.020[7]	mg/l	1 X Daily[8]	Grab
Whole Effluent Toxicity[10]								

Table 2

	Quality or Concentration			Monitoring	Requirements
Parameter	Daily Minimum	Daily Maximum	Units	Measurement Frequency	Sample Type
pH	6.0	9.0	s.u.	1 X Weekly	Grab

[1] See Part I.B. of the permit for the Narrative Water Quality Standards.

[2] In the event that changes are to be made in the use of water treatment additives that could significantly change the nature of, or increase the discharge concentration of the additive to Outfall 012, the permittee shall notify the Indiana Department of Environmental Management as required in Part II.C.1 of this permit. The use of any new or changed water treatment additives or dosage rates shall not cause the discharge from any permitted outfall to exhibit chronic or acute toxicity. Acute and chronic aquatic toxicity information must be provided with any notification regarding any new or changed water treatment additives or dosage rates.

[3] Case-Specific LOD/LOQ
The permittee may determine a case-specific LOD or LOQ using the analytical method specified below, or any other test method which is approved by the Commissioner prior to use. The LOD shall be derived by the procedure specified for method detection limits contained in 40 CFR Part 136, Appendix B, and the

LOQ shall be set equal to 3.18 times the LOD. Other methods may be used if first approved by the Commissioner.

The following EPA test methods and/or Standard Methods and associated LODs and LOQs are to be used in the analysis of the effluent samples. Alternative methods may be used if first approved by IDEM.

Parameter	Test Method	LOD	LOQ
Chlorine	4500-Cl-D,E or 4500-Cl-G	0.02 mg/l	0.06 mg/l
Mercury	1631, Revision E	0.2 ng/l	0.5 ng/l

[4] The permittee shall measure and report the identified metals as total recoverable metals.

[5] Mercury monitoring shall be conducted bi-monthly in the months of February, April, June, August, October, and December of each year for the term of the permit using EPA Test Method 1631, Revision E. After six (6) samples have been completed over the course of the first year of monitoring, the permittee may submit a request for review of all mercury monitoring data for the consideration of a reduction of mercury monitoring. Bi-monthly (6 X Yearly) monitoring shall continue until a permit modification is approved.

[6] The monthly average water quality based effluent limit (WQBEL) for total residual chlorine is less than the limit of quantitation (LOQ) as specified above. Compliance with the monthly average limit will be demonstrated if the monthly average effluent level is less than or equal to the monthly average WQBEL. Daily effluent values that are less than the LOQ, used to determine the monthly average effluent levels less than the LOQ, may be assigned a value of zero (0), unless, after considering the number of monitoring results that are greater than the limit of detection (LOD), and applying appropriate statistical techniques, a value other than zero (0) is warranted.

[7] The daily maximum WQBEL for chlorine is greater than or equal to the LOD but less than the LOQ as specified above. Compliance with the daily maximum limit will be demonstrated if the observed effluent concentrations are less than the LOQ. Compliance with the daily maximum mass value will be demonstrated if the calculated mass value is less than 35.0 lbs/day.

[8] Monitoring for TRC shall be 1 X Daily during Zebra or Quagga mussel intake chlorination, and continue for three additional days after Zebra or Quagga mussel treatment has been completed.

[9] See Part I.G for the Pollutant Minimization Program requirements.

[10] The permittee shall initiate a biomonitoring program for Outfall 012 using the procedures contained under Part I.H. of this permit.

[11] The Storm Water Monitoring and Non Numeric Effluent Limits and the Storm Water Pollution Prevention Plan (SWP3) requirements can be found in Part I.D. and I.E of this permit

9. The permittee is authorized to discharge from the outfall listed below in accordance with the terms and conditions of this permit. The permittee is authorized to discharge from Internal Outfall 111. The discharge is limited to treated process wastewaters from the Hot Strip Mill. Samples taken in compliance with the monitoring requirements below shall be taken at a point representative of the discharge but prior to mixing with other wastestreams contributing to Outfall 012. Such discharge shall be limited and monitored by the permittee as specified below:

DISCHARGE LIMITATIONS

Table 1

	Quantity or Loading			Quality or Concentration			Monitoring Requirements	
Parameter	Monthly Average	Daily Maximum	Units	Monthly Average	Daily Maximum	Units	Measurement Frequency[1]	Sample Type
Flow	Report	Report	MGD	-------	-------	-----	2 X Weekly	24 Hour Total
TSS	Report	Report	lbs/day	Report	Report	mg/l	2 X Weekly	24-Hr. Comp.
O+G	Report	Report	lbs/day	Report	Report	mg/l	2 X Weekly	Grab

[1] Samples taken for Internal Outfalls 111 and 211 must be collected on the same day.

10. The permittee is authorized to discharge from the outfall listed below in accordance with the terms and conditions of this permit. The permittee is authorized to discharge from Internal Outfall 211. The discharge is limited to treated process wastewater from the pickling and cold rolling operations and wastewater from the Hot Strip Mill oily-waste sumps. Samples taken in compliance with the monitoring requirements below shall be taken at a point representative of the oily waste treatment plant (OWTP) discharge but prior to mixing with other wastestreams contributing to Outfall 012. Such discharge shall be limited and monitored by the permittee as specified below:

DISCHARGE LIMITATIONS

Table 1

	Quantity or Loading			Quality or Concentration			Monitoring	Requirements
Parameter	Monthly Average	Daily Maximum	Units	Monthly Average	Daily Maximum	Units	Measurement Frequency[1]	Sample Type
Flow	Report	Report	MGD	-------	-------	-----	2 X Weekly	24 Hour Total
TSS	Report	Report	lbs/day	Report	Report	mg/l	2 X Weekly	24-Hr. Comp.
O+G	Report	Report	lbs/day	Report	Report	mg/l	2 X Weekly	Grab
Zinc[2]	3.22	9.65	lbs/day	Report	Report	ug/l	2 X Weekly	24-Hr. Comp.
Lead[2]	3.25	9.3	lbs/day	Report	Report	ug/l	2 X Weekly	24-Hr. Comp.
Naphthalene	--------	1.11	lbs/day	-------	Report	mg/l	2 X Weekly	Grab
TCE	--------	1.68	lbs/day	-------	Report	mg/l	2 X Weekly	Grab

[1] Samples taken for Internal Outfalls 111 and 211 must be collected on the same day.

[2] The permittee shall measure and report the identified metals as total recoverable metals.

11. The permittee is authorized to discharge from Internal Outfalls 111 and 211 and report (combined total) as Internal Outfall 411. The discharge is limited to treated process wastewater from Internal Outfalls 111 and 211. Such discharge shall be limited and monitored by the permittee as specified below:

DISCHARGE LIMITATIONS

Table 1

	Quantity or Loading			Quality or Concentration			Monitoring	Requirements
Parameter	Monthly Average	Daily Maximum	Units	Monthly Average	Daily Maximum	Units	Measurement Frequency[1]	Sample Type
Flow	Report	Report	MGD	-------	-------	-----	2 X Weekly	24 Hour Total
TSS	4381	11365	lbs/day	Report	Report	mg/l	2 X Weekly	24-Hr. Comp.
O+G	1048	3089	lbs/day	Report	Report	mg/l	2 X Weekly	Grab

[1] Samples taken for Internal Outfalls 111 and 211 must be collected on the same day.

B. NARRATIVE WATER QUALITY STANDARDS

At all times the discharge from any and all point sources specified within this permit shall not cause receiving waters:

1. including the mixing zone, to contain substances, materials, floating debris, oil, scum, or other pollutants:

   a. that will settle to form putrescent or otherwise objectionable deposits;

   b. that are in amounts sufficient to be unsightly or deleterious;

   c. that produce color, visible oil sheen, odor, or other conditions in such degree as to create a nuisance;

   d. which are in amounts sufficient to be acutely toxic to , or to otherwise severely injure or kill aquatic life, other animals, plants, or humans;

   e. which are in concentrations or combinations that will cause or contribute to the growth of aquatic plants or algae to such a degree as to create a nuisance, be unsightly, or otherwise impair the designated uses.

2. outside the mixing zone, to contain substances in concentrations which on the basis of available scientific data are believed to be sufficient to injure, be chronically toxic to, or be carcinogenic, mutagenic, or teratogenic to humans, animals, aquatic life, or plants.

C. MONITORING AND REPORTING

1. Representative Sampling

Samples and measurements taken as required herein shall be representative of the volume and nature of the discharge.

2. Discharge Monitoring Reports

a. For parameters with monthly average water quality based effluent limitations (WQBELs) below the LOQ, daily effluent values that are less than the limit of quantitation (LOQ) may be assigned a value of zero (0).

b. For all other parameters for which the monthly average WQBEL is equal to or greater than the LOQ, calculations that require averaging of measurements of daily values (both concentration and mass) shall use an arithmetic mean. When a daily discharge value is below the LOQ, a value of zero (0) shall be used for that value in the calculation to determine the monthly average unless otherwise specified or approved by the Commissioner.

c. Effluent concentrations less than the LOD shall be reported on the Discharge Monitoring Report (DMR) forms as < (less than) the value of the LOD. For example, if a substance is not detected at a concentration of 0.1 μg/l, report the value as <0.1 μg/l.

d. Effluent concentrations greater than or equal to the LOD and less than the LOQ that are reported on a DMR shall be reported as the actual value and annotated on the DMR to indicate that the value is not quantifiable.

e. Mass discharge values which are calculated from concentrations reported as less than the value of the limit of detection shall be reported as less than the corresponding mass discharge value.

f. Mass discharge values that are calculated from effluent concentrations greater than the limit of detection shall be reported as the calculated value.

The permittee shall submit federal and state discharge monitoring reports to the Indiana Department of Environmental Management containing results obtained during the previous month which shall be postmarked no later than the 28th day of the month following each completed monitoring period. The first report shall be submitted by the 28th day of the month following the month in which the permit becomes effective.

The Regional Administrator may request the permittee to submit monitoring reports to the Environmental Protection Agency if it is deemed necessary to assure compliance with the permit.

3. Definitions

a. Monthly Average

(1) Mass Basis - The "monthly average" discharge means the total mass discharge during a calendar month divided by the number of days in the month that the production or commercial facility was discharging. Where less than daily samples is required by this permit, the monthly average discharge shall be determined by the summation of the measured daily mass discharges divided by the number of days during the calendar month when the measurements were made.

(2) Concentration Basis - The "monthly average" concentration means the arithmetic average of all daily determinations of concentration made during a calendar month. When grab samples are used, the daily determination of concentration shall be the arithmetic average (weighted by flow value) of all the samples collected during the calendar day.

b. "Daily Discharge"

(1) Mass Basis – The "daily discharge" means the total mass discharge by weight during any calendar day.

(2) Concentration Basis – The "daily discharge" means the average concentration over the calendar day or any twenty-four (24) hour period that reasonably represents the calendar day for the purposes of sampling.

c. "Daily Maximum"

(1) Mass Basis – The "daily maximum" means the maximum daily discharge mass value for any calendar day.

(2) Concentration Basis – The "daily maximum" means the maximum daily discharge value for any calendar day.

(3) Temperature Basis – The "daily maximum" means the highest temperature value measured for any calendar day.

d. A 24-hour composite sample consists of at least 3 individual flow-proportioned samples of wastewater, taken by the grab sample method or by an automatic sampler, which are taken at approximately either equally spaced time intervals or time intervals between samples proportional to stream flow for the duration of the discharge within a 24-hour period and which are combined prior to analysis. A flow-proportioned composite sample may be obtained by:

(1) recording the discharge flow rate at the time each individual sample is taken,

(2) adding together the discharge flow rates recorded from each individuals sampling time to formulate the "total flow" value,

(3) the discharge flow rate of each individual sampling time is divided by the total flow value to determine its percentage of the total flow value,

(4) then multiply the volume of the total composite sample by each individual sample's percentage to determine the volume of that individual sample which will be included in the total composite sample.

e. Concentration -The weight of any given material present in a unit volume of liquid. Unless otherwise indicated in this permit, concentration values shall be expressed in milligrams per liter (mg/l).

f. The "Regional Administrator" is defined as the Region V Administrator, U.S. EPA, located at 77 West Jackson Boulevard, Chicago, Illinois 60604.

g. The "Commissioner" is defined as the Commissioner of the Indiana Department of Environmental Management, which is located at the following address: 100 North Senate Avenue, Indianapolis, Indiana 46204.

h. "Limit of Detection" or "LOD" means a measurement of the concentration of a substance that can be measured and reported with ninety-nine percent (99%) confidence that the analyte concentration is greater than zero (0) for a particular analytical method and sample matrix. The LOD is equivalent to the method detection level or MDL.

i. "Limit of Quantitation" or "LOQ" means a measurement of the concentration of a contaminant obtained by using a specified laboratory procedure calibrated at a specified concentration above the method detection level. It is considered the lowest concentration at which a particular contaminant can be quantitatively measured using a specified laboratory procedure for monitoring of the contaminant. This term is also sometimes called limit quantification or quantification level.

j. "Method Detection Level" or "MDL" means the minimum concentration of an analyte (substance) that can be measured and reported with a ninety-nine percent (99%) confidence that the analyte concentration is greater than zero (0) as determined by procedure set forth in 40 CFR 136, Appendix B. The method detection level or MDL is equivalent to the LOD.

4. Test Procedures

The analytical and sampling methods used shall conform to the current version of 40 CFR 136. Multiple editions of Standard Methods for the Examination of Water and Wastewater are currently approved for most methods, however, 40 CFR Part 136 should be checked to ascertain if a particular method is approved for a particular analyte. The approved methods may be included in the texts listed below. However, different but equivalent methods are allowable if they receive the prior written approval of the Commissioner and the U.S. Environmental Protection Agency.

a. Standard Methods for the Examination of Water and Wastewater 18th, 19th, or 20th Editions, 1992, 1995, or 1998, American Public Health Association, Washington, D.C. 20005.

b. A.S.T.M. Standards, Parts 23, Water; Atmosphere Analysis
1972 American Society for Testing and Materials, Philadelphia, PA 19103.

c. Methods for Chemical Analysis of Water and Wastes
June 1974, Revised, March 1983, Environmental Protection Agency, Water Quality Office, Analytical Quality Control Laboratory, 1014 Broadway, Cincinnati, OH 45202.

5. Recording of Results

For each measurement or sample taken pursuant to the requirements of this permit, the permittee shall record and maintain records of all monitoring information and monitoring activities under this permit, including the following information:

a. The exact place, date, and time of sampling;

b. The person(s) who performed the sampling or measurements;

c. The dates the analyses were performed;

d The person(s) who performed the analyses;

e. The analytical techniques or methods used; and

f. The results of all required analyses and measurements.

6. Additional Monitoring by Permittee

If the permittee monitors any pollutant at the location(s) designated herein more frequently than required by this permit, using approved analytical methods as specified above, the results of this monitoring shall be included in the calculation and reporting of the values required in the monthly Discharge Monitoring Report (DMR). Such increased frequency shall also be indicated. Other monitoring data not specifically required in this permit (such as internal process or internal waste stream data) which is collected by or for the permittee need not be submitted unless requested by the Commissioner.

7. Records Retention

All records and information resulting from the monitoring activities required by this permit, including all records of analyses performed and

calibration and maintenance of instrumentation and recording from continuous monitoring instrumentation, shall be retained for a minimum of three (3) years. In cases where the original records are kept at another location, a copy of all such records shall be kept at the permitted facility. The three years shall be extended:

a. automatically during the course of any unresolved litigation regarding the discharge of pollutants by the permittee or regarding promulgated effluent guidelines applicable to the permittee; or

b. as requested by the Regional Administrator or the Indiana Department of Environmental Management.

D. STORM WATER MONITORING AND NON-NUMERIC CONDITIONS

1. Within eighteen (18) months of the effective date of this permit ArcelorMittal shall implement the non-numeric permit conditions in Part I.D. of this permit for the entire site as it relates to storm water associated with industrial activity regardless which outfall the storm water is discharged from.

2. Control Measures and Effluent Limits

In the technology-based limits included in Part I.D.3-5., the term "minimize" means reduce and/or eliminate to the extent achievable using control measures (including best management practices) that are technologically available and economically practicable and achievable in light of best industry practice.

3. Control Measures

Select, design, install, and implement control measures (including best management practices) to address the selection and design considerations in Part I.D.4 to meet the non-numeric effluent limits in Part I.D.5. The selection, design, installation, and implementation of these control measures must be in accordance with good engineering practices and manufacturer's specifications. Any deviation from the manufacturer's specifications shall be documented. If the control measures are not achieving their intended effect in minimizing pollutant discharges, the control measures must be modified as expeditiously as practicable. Regulated storm water discharges from the facility include storm water run-on that commingles with storm water discharges associated with industrial activity at the facility.

4. Control Measure Selection and Design Considerations

When selecting and designing control measures consider the following:

a. preventing storm water from coming into contact with polluting materials is generally more effective, and cost-effective, than trying to remove pollutants from storm water;

b. use of control measures in combination is more effective than use of control measures in isolation for minimizing pollutants in storm water discharge;

c. assessing the type and quantity of pollutants, including their potential to impact receiving water quality, is critical to designing effective control measures that will achieve the limits in this permit;

d. minimizing impervious areas at your facility and infiltrating runoff onsite (including bioretention cells, green roofs, and pervious pavement, among other approaches), can reduce runoff and improve ground water recharge and stream base flows in local streams, although care must be taken to avoid ground water contamination;

e. flow can be attenuated by use of open vegetated swales and natural depressions;

f. conservation and/or restoration of riparian buffers will help protect streams from storm water runoff and improve water quality; and

g. use of treatment interceptors (e.g., swirl separators and sand filters) may be appropriate in some instances to minimize the discharge of pollutants.

5. Technology-Based Effluent Limits (BPT/BAT/BCT): Non-Numeric Effluent Limits

a. <u>Minimize Exposure</u>

Minimize the exposure of raw, final, or waste materials to rain, snow, snowmelt, and runoff. To the extent technologically available and economically practicable and achievable, either locate industrial materials and activities inside or protect them with storm resistant coverings in order to minimize exposure to rain, snow, snowmelt, and runoff (although significant enlargement of

impervious surface area is not recommended). In minimizing exposure, pay particular attention to the following areas:

Loading and unloading areas: locate in roofed or covered areas where feasible; use grading, berming, or curbing around the loading area to divert run-on; locate the loading and unloading equipment and vehicles so that leaks are contained in existing containment and flow diversion systems.

Material storage areas: locate indoors, or in roofed or covered areas where feasible; install berms/dikes around these areas; use dry cleanup methods.

Note: Industrial materials do not need to be enclosed or covered if storm water runoff from affected areas will not be discharged to receiving waters.

b. Good Housekeeping

Keep clean all exposed areas that are potential sources of pollutants, using such measures as sweeping at regular intervals, keeping materials orderly and labeled, and stowing materials in appropriate containers.

As part of the developed good housekeeping program, include a cleaning and maintenance program for all impervious areas of the facility where particulate matter, dust, or debris may accumulate, especially areas where material loading and unloading, storage, handling, and processing occur; and where practicable, the paving of areas where vehicle traffic or material storage occur but where vegetative or other stabilization methods are not practicable (institute a sweeping program in these areas too). For unstabilized areas where sweeping is not practicable, consider using stormwater management devices such as sediment traps, vegetative buffer strips, filter fabric fence, sediment filtering boom, gravel outlet protection, or other equivalent measures that effectively trap or remove sediment.

c. Maintenance

Maintain all control measures which are used to achieve the effluent limits required by this permit in effective operating condition. Nonstructural control measures must also be diligently maintained (e.g., spill response supplies available, personnel

appropriately trained). If control measures need to be replaced or repaired, make the necessary repairs or modifications as expeditiously as practicable.

d. Spill Prevention and Response Procedures

You must minimize the potential for leaks, spills and other releases that may be exposed to storm water and develop plans for effective response to such spills if or when they occur. At a minimum, you must implement:

(1) Procedures for plainly labeling containers (e.g., "Used Oil", "Spent Solvents", "Fertilizers and Pesticides", etc.) that could be susceptible to spillage or leakage to encourage proper handling and facilitate rapid response if spills or leaks occur;

(2) Preventive measures such as barriers between material storage and traffic areas, secondary containment provisions, and procedures for material storage and handling;

(3) Procedures for expeditiously stopping, containing, and cleaning up leaks, spills, and other releases. Employees who may cause, detect or respond to a spill or leak must be trained in these procedures and have necessary spill response equipment available. If possible, one of these individuals should be a member of your storm water pollution prevention team; and

(4) Procedures for notification of appropriate facility personnel, emergency response agencies, and regulatory agencies. State or local requirements may necessitate reporting spills or discharges to local emergency response, public health, or drinking water supply agencies. Contact information must be in locations that are readily accessible and available.

(5) Procedures for documenting where potential spills and leaks could occur that could contribute pollutants to storm water discharges, and the corresponding outfalls that would be affected by such spills and leaks.

(6) A procedure for documenting all significant spills and leaks of oil or toxic or hazardous pollutants that actually occurred

at exposed areas, or that drained to a storm water conveyance.

e. Erosion and Sediment Controls

Through the use of structural and/or non-structural control measures stabilize, and contain runoff from, exposed areas to minimize onsite erosion and sedimentation, and the resulting discharge of pollutants. Among other actions to meet this limit, place flow velocity dissipation devices at discharge locations and within outfall channels where necessary to reduce erosion and/or settle out pollutants. In selecting, designing, installing, and implementing appropriate control measures, you are encouraged to check out information from both the State and EPA websites. The following two websites are given as information sources: http://www.in.gov/idem/4899.htm and http://cfpub.epa.gov/npdes/stormwater/menuofbmps/index.cfm

f. Management of Runoff

Divert, infiltrate, reuse, contain or otherwise reduce storm water runoff, to minimize pollutants in the discharge.

g. Salt Storage Piles or Piles Containing Salt

Enclose or cover storage piles of salt, or piles containing salt, used for deicing or other commercial or industrial purposes, including maintenance of paved surfaces. You must implement appropriate measures (e.g., good housekeeping, diversions, containment) to minimize exposure resulting from adding to or removing materials from the pile. Piles do not need to be enclosed or covered if storm water runoff from the piles is not discharged.

h. Waste, Garbage, and Floatable Debris

Ensure that waste, garbage, and floatable debris are not discharge to receiving waters by keeping exposed areas free of such materials or by intercepting them before they are discharged.

i. Employee Training

Train all employees who work in areas where industrial material or activities are exposed to storm water, or who are responsible for implementing activities necessary to meet the conditions of this permit (e.g., inspectors, maintenance personnel), including all

members of your Pollution Prevention Team. Training must cover the specific control measures used to achieve the effluent limits in this part, and monitoring, inspection, planning, reporting, and documentation requirements in other parts of this permit

j. Non-Storm Water Discharges

You must determine if any non-storm water discharges not authorized by an NPDES permit exist. Any non-storm water discharges discovered must either be eliminated or modified into this permit.

The following non-storm water discharges are authorized and should be documented when they occur in accordance with Part I.E.2.c. of the permit:

Discharges from fire-fighting activities;
Fire Hydrant flushings;
Potable water, including water line flushings;
Uncontaminated condensate from air conditioners, coolers, and other compressors and from the outside storage of refrigerated gases or liquids;
Irrigation drainage;
Landscape watering provided all pesticides, herbicides, and fertilizer have been applied in accordance with the approved labeling;
Pavement wash water where no detergents are used and no spills or leaks of toxic or hazardous material have occurred (unless all spilled material has been removed);
Routine external building washdown that does not use detergents;
Uncontaminated ground water or spring water;

k. Dust Generation and Vehicle Tracking of Industrial Materials

You must minimize generation of dust and off-site tracking of raw, final, or waste materials.

6. Annual Review

At least once every 12 months, you must review the selection, design, installation, and implementation of your control measures to determine if modifications are necessary to meet the effluent limitations in this permit. You must document the results of your review in a report that shall be

retained within the SWPPP. You must also submit the report to the Industrial NPDES Permit Section on an annual basis.

7. Corrective Actions – Conditions Requiring Review

a. If any of the following conditions occur, you must review and revise the selection, design, installation, and implementation of your control measures to ensure that the condition is eliminated and will not be repeated:

(1) an unauthorized release or discharge (e.g., spill, leak, or discharge of non-storm water not authorized by this NPDES permit) occurs at this facility;

(2) it is determined that your control measures are not stringent enough for the discharge to meet applicable water quality standards;

(3) it is determined in your routine facility inspection, an inspection by EPA or IDEM, comprehensive site evaluation, or the Annual Review required in Part D.6 that modifications to the control measures are necessary to meet the effluent limits in this permit or that your control measures are not being properly operated and maintained; or

(4) Upon written notice by the Commissioner that the control measures prove to be ineffective in controlling pollutants in storm water discharges exposed to industrial activity.

b. If any of the following conditions occur, you must review and revise the selection, design, installation, and implementation of your control measures to determine if modifications are necessary to meet the effluent limits in this permit:

(1) construction or a change in design, operation, or maintenance at your facility that significantly changes the nature of pollutants discharged in storm water from your facility, or significantly increases the quantity of pollutants discharge.

8. Corrective Action Deadlines

You must document your discovery of any of the conditions listed in Part I.D.7 within thirty (30) days of making such discovery. Subsequently,

within one-hundred and twenty (120) days of such discovery, you must document any corrective action(s) to be taken to eliminate or further investigate the deficiency or if no corrective action is needed, the basis for that determination. Specific documentation required within 30 and 120 days is detailed below. If you determine that changes to your control measures are necessary following your review, any modifications to your control measures must be made before the next storm event if possible, or as soon as practicable following that storm event. These time intervals are not grace periods, but schedules considered reasonable for the documenting of your findings and for making repairs and improvements. They are included in this permit to ensure that the conditions prompting the need for these repairs and improvements are not allowed to persist indefinitely.

9. Corrective Action Report

Within 30 days of a discovery of any condition listed in Part I.D.7, you must document the following information:

a. Brief description of the condition triggering corrective action;

b. Date condition identified; and

c. How deficiency identified.

Within 120 days of discovery of any condition listed in Part I.D.7, you must document the following information:

a. Summary of corrective action taken or to be taken (or, for triggering events identified in Part I.D.7.b.1, where you determine that corrective action is not necessary, the basis for this determination)

b. Notice of whether SWPPP modifications are required as a result of this discovery or corrective action;

c. Date corrective action initiated; and

d. Date corrective action completed or expected to be completed.

10. Inspections

The inspections in this part must be conducted at this facility.

a. At a minimum, quarterly inspections of the storm water management measures and storm water run-off conveyances. The

routine inspections must be performed by qualified personnel with at least one member of your storm water pollution prevention team. Inspections must be documented and either contained in, or have the on-site record keeping location referenced in, the SWPPP.

b. Routine Facility Inspection Documentation – You must document the findings of each routine facility inspection performed and maintain this documentation with your SWPPP or have the on-site record keeping location referenced in the SWPPP. At a minimum, your documentation must include:

(1) The inspection date and time;

(2) The name(s) and signature(s) of the inspectors;

(3) Weather information and a description of any discharges occurring at the time of the inspection;

(4) Any previously unidentified discharges of pollutants from the site;

(5) Any control measures needing maintenance or repairs;

(6) Any failed control measures that need replacement;

(7) Any incidents of noncompliance observed; and

(8) Any additional control measures needed to comply with the permit requirements.

Any corrective action required as a result of a routine facility inspection must be performed consistent with Part I.D.7 of this permit.

c. Comprehensive Site Compliance Evaluation – Qualified personnel shall conduct a comprehensive site compliance evaluation, at least once per year, to confirm the accuracy of the description of potential pollution sources contained in the plan, determine the effectiveness of the plan, and assess compliance with the permit. Such evaluations shall provide:

(1) Areas contributing to a storm water discharge associated with industrial activity shall be visually inspected for evidence of, or the potential for, pollutants entering the drainage system. Measures to reduce pollutant loadings

shall be evaluated to determine whether they are adequate and properly implemented in accordance with the terms of the permit or whether additional control measures are needed. Structural storm water management measure, sediment and erosion control measures, and other structural pollution prevention measures identified in the plan shall be observed to ensure that they are operating correctly. A visual inspection of equipment needed to implement the plan, such as spill response equipment, shall be made.

As part of the routine inspections, address all potential sources of pollutants, including (if applicable) air pollution control equipment (e.g., baghouses, electrostatic precipitator, scrubbers, and cyclones), for any signs of degradation (e.g., leaks, corrosion, or improper operation) that could limit their efficiency and lead to excessive emissions. Considering monitoring air flow at inlets and outlets (or use equivalent measures) to check for leaks (e.g., particulate deposition) or blockage in ducts. Also inspect all process and material handling equipment (e.g., conveyors, cranes, and vehicles) for leaks, drips, or the potential loss of material; and material storage areas (e.g., piles, bins, or hoppers for storing coke, coal, scrap, or slag, as well as chemicals stored in tanks and drums) for signs of material loss due to wind or storm water runoff.

(2) Based on the results of the evaluation, the description of potential pollutant sources identified in the plan in accordance with Part I.E.2.b of this permit and pollution prevention measures and controls identified in the plan in accordance with Part I.D.5. of this permit shall be revised as appropriate within the timeframes contained in Part I.D.9 of this permit.

(3) A report summarizing the scope of the evaluation, personnel making the evaluation, the date(s) of the evaluation, major observations relating to the implementation of the storm water pollution prevention plan, and actions taken in accordance with the above paragraph must be documented and either contained in, or have on-site record keeping location referenced in, the SWPPP at least 3 years after the date of the evaluation. The report shall identify any incidents of noncompliance. Where a report does not identify any incidents of noncompliance, the report shall contain a certification that

the facility is in compliance with the storm water pollution prevention plan and this permit. The report shall be signed in accordance with the signatory requirements of Part II.C.6 of this permit.

(4) Where compliance evaluation schedules overlap the inspections required under Part I.D.10(a), the compliance evaluation may be conducted in place of one such inspection.

E. STORM WATER POLLUTION PREVENTION PLAN

1. Development of Plan

Within 18 months from the effective date of this permit, the permittee is required to develop and implement a Storm Water Pollution Prevention Plan (SWPPP) for the permitted facility. The plan shall at a minimum include the following:

a. Identify potential sources of pollution, which may reasonably be expected to affect the quality of storm water discharges associated with industrial activity from the facility. Storm water associated with industrial activity (defined in 40 CFR 122.26(b)) includes, but is not limited to, the discharge from any conveyance which is used for collecting and conveying storm water and which is directly related to manufacturing, processing or materials storage areas at an industrial plant;

b. Describe practices and measure to be used in reducing the potential for pollutants to be exposed to storm water; and

c. Assure compliance with the terms and conditions of this permit.

2. Contents

The plan shall include, at a minimum, the following items:

a. Pollution Prevention Team -The plan shall list, by position title, the member or members of the facility organization as members of a storm water Pollution Prevention Team who are responsible for developing the storm water pollution prevention plan (SWPPP) and assisting the facility or plant manager in its implementation, maintenance, and revision. The plan shall clearly identify the responsibilities of each storm water pollution prevention team

member. Each member of the storm water pollution prevention team must have ready access to either an electronic or paper copy of applicable portions of this permit and your SWPPP.

b. Description of Potential Pollutant Sources – The plan shall provide a description of areas at the site exposed to industrial activity and have a reasonable potential for storm water to be exposed to pollutants. The plan shall identify all activities and significant materials (defined in 40 CFR 122.26(b)), which may potentially be significant pollutant sources. As a minimum, the plan shall contain the following:

(1) A soils map indicating the types of soils found on the facility property and showing the boundaries of the facility property.

(2) A graphical representation, such as an aerial photograph or site layout maps, drawn to an appropriate scale, which contains a legend and compass coordinates, indicating, at a minimum, the following:

(A) All on-site storm water drainage and discharge conveyances, which may include pipes, ditches, swales, and erosion channels, related to a storm water discharge.

(B) Known adjacent property drainage and discharge conveyances, if directly associated with run-off from the facility.

(C) All on-site and known adjacent property water bodies, including wetlands and springs.

(D) An outline of the drainage area for each outfall.

(E) An outline of the facility property, indicating directional flows, via arrows, of surface drainage patterns.

(F) An outline of impervious surfaces, which includes pavement and buildings, and an estimate of the impervious and pervious surface square footage for each drainage area placed in a map legend.

(G) On-site injection wells, as applicable.

(H) On-site wells used as potable water sources, as applicable.

(I) All existing major structural control measures to reduce pollutants in storm water run-off.

(J) All existing and historical underground or aboveground storage tank locations, as applicable.

(K) All permanently designated plowed or dumped snow storage locations.

(L) All loading and unloading areas for solid and liquid bulk materials.

(M) All existing and historical outdoor storage areas for raw materials, intermediary products, final products, and waste materials. Include materials handled at the site that potentially may be exposed to precipitation or runoff, areas where deposition of particulate matter from process air emissions or losses during material-handling activities.

(N) All existing or historical outdoor storage areas for fuels, processing equipment, and other containerized materials, for example, in drums and totes.

(O) Outdoor processing areas.

(P) Dust or particulate generating process areas.

(Q) Outdoor assigned waste storage or disposal areas.

(R) Pesticide or herbicide application areas.

(S) Vehicular access roads.

(T) Identify any storage or disposal of wastes such as spent solvents and baths, sand, slag and dross; liquid storage tanks and drums; processing areas including pollution control equipment (e.g., baghouses); and storage areas of raw material such as coal, coke, scrap, sand, fluxes, refractories, or

metal in any form. In addition, indicate where an accumulation of significant amounts of particulate matter could occur from such sources as furnace or oven emissions, losses from coal and coke handling operation, etc., and could result in a discharge of pollutants.

The mapping of historical locations is only required if the historical locations have a reasonable potential for stormwater exposure to historical pollutants.

(3) An area site map that indicates:

(A) The topographic relief or similar elevations to determine surface drainage patterns;

(B) The facility boundaries;

(C) All receiving waters; and

(D) All known drinking water wells; and

Includes at a minimum, the features in clauses (A), (C), and (D) within a one-fourth (1/4) mile radius beyond the property boundaries of the facility. This map must be to scale and include a legend and compass coordinates.

(4) A narrative description of areas that generate storm water discharges exposed to industrial activity including descriptions for any existing or historical areas listed in subdivision 2.b.(2)(J) through (S) of this Part, and any other areas thought to generate storm water discharges exposed to industrial activity. The narrative descriptions for each identified area must include the following:

(A) Type and typical quantity of materials present in the area.

(B) Methods of storage, including presence of any secondary containment measures.

(C) Any remedial actions undertaken in the area to eliminate pollutant sources or exposure of storm water to those sources. If a corrective action plan was developed, the type of remedial action and plan

date shall be referenced.

(D) Any significant release or spill history dating back a period of three (3) years from the effective date of this permit, in the identified area, for materials spilled outside of secondary containment structures and impervious surfaces in excess of their reportable quantity, including the following:

i. The date and type of material released or spilled.

ii. The estimated volume released or spilled.

iii. A description of the remedial actions undertaken, including disposal or treatment.

Depending on the adequacy or completeness of the remedial actions, the spill history shall be used to determine additional pollutant sources that may be exposed to storm water. In subsequent permit terms, the history shall date back for a period of five (5) years from the date of the permit renewal application.

(E) Where the chemicals or materials have the potential to be exposed to storm water discharges, the descriptions for each identified area must include a risk identification analysis of chemicals or materials stored or used within the area. The analysis must include the following:

i. Toxicity data of chemicals or materials used within the area, referencing appropriate material safety data sheet information locations.

ii. The frequency and typical quantity of listed chemicals or materials to be stored within the area.

iii. Potential ways in which storm water discharges may be exposed to listed chemicals and materials.

iv. The likelihood of the listed chemicals and materials to come into contact with water.

(5) A narrative description of existing and planned management practices and measures to improve the quality of storm water run-off entering a water of the state. Descriptions must be created for existing or historical areas listed in subdivision 2.b.(2)(J) through (S) and any other areas thought to generate storm water discharges exposed to industrial activity. The description must include the following:

(A) Any existing or planned structural and nonstructural control practices and measures.

(B) Any treatment the storm water receives prior to leaving the facility property or entering a water of the state.

(C) The ultimate disposal of any solid or fluid wastes collected in structural control measures other than by discharge.

(D) Describe areas that due to topography, activities, or other factors have a high potential for significant soil erosion.

(E) Document the location of any storage piles containing salt used for deicing.

(F) Information or other documentation required under subsection (d) of this plan.

(6) The results of storm water monitoring. The monitoring data must include completed field data sheets, chain-of-custody forms, and laboratory results. If the monitoring data are not placed into the facility's SWPPP, the on-site location for storage of the information must be reference in the SWPPP.

c. Non-Stormwater Discharges – You must document that you have evaluated for the presence of non-storm water discharges not authorized by an NPDES. Any non-storm water discharges have either been eliminated or incorporated into this permit.

Documentation of non-storm water discharges shall include a written non-storm water assessment, including the following:

(1) A certification letter stating that storm water discharges entering a water of the state have been evaluated for the presence of illicit discharges and non-storm water contributions.

(2) Detergent or solvent-based washing of equipment or vehicles that would allow washwater additives to enter any storm water only drainage system shall not be allowed at this facility unless appropriately permitted under this NPDES permit.

(3) All interior maintenance area floor drains with the potential for maintenance fluids or other materials to enter storm water only storm sewers must be either sealed, connected to a sanitary sewer with prior authorization, or appropriately permitted under this NPDES permit. The sealing, sanitary sewer connecting, or permitting of drains under this item must be documented in the written non-storm water assessment program.

(4) The certification shall include a description of the method used, the date of any testing, and the on-site drainage points that were directly observed during the test.

d. General Requirements – The SWPPP must meet the following general requirements:

(1) The plan shall be certified by a qualified professional. The term qualified professional means an individual who is trained and experienced in water treatment techniques and related fields as may be demonstrated by state registration, professional certification, or completion of course work that enable the individual to make sound, professional judgments regarding storm water control/treatment and monitoring, pollutant fate and transport, and drainage planning.

(2) The plan shall be retained at the facility and be available for review by a representative of the Commissioner upon request. IDEM may provide access to portions of your SWPPP to the public.

(3) The plan must be revised and updated as required. Revised and updated versions of the plan must be implemented on or before three hundred sixty-five (365) days from the effective date of this permit. The Commissioner may grant an extension of this time frame based on a request by the person showing reasonable cause.

(4) If the permittee has other written plans, required under applicable federal or state law, such as operation and maintenance, spill prevention control and countermeasures (SPCC), or risk contingency plans, which fulfill certain requirements of an SWPPP, these plans may be referenced, at the permittee's discretion, in the appropriate sections of the SWPPP to meet those section requirements.

(5) The permittee may combine the requirements of the SWPPP with another written plan if:

(A) The plan is retained at the facility and available for review;

(B) All the requirements of the SWPPP are contained within the plan; and

(C) A separate, labeled section is utilized in the plan for the SWPPP requirements.

F. SCHEDULE OF COMPLIANCE – Outfalls 002, 009, 010, and 011 for Mercury

The permittee shall achieve compliance with the effluent limitations specified for Mercury at Outfalls 002, 009, 010, and 011 as soon as possible but no later than fifty-four (54) months from the effective date of this permit in accordance with the following schedule:

1. The permittee shall submit a written Quality Assurance Project Plan (QAPP) to identify the sources of Mercury to the Compliance Data Section of the Office of Water Quality (OWQ) no later than three (3) months from the effective date of this permit. IDEM will provide any comments within 30 days of receipt of the QAPP. If comments are made, IDEM will provide the permittee with the opportunity to discuss any comments prior to implementation of the QAPP. If IDEM does not comment within 30 days of its receipt of the QAPP, the permittee may proceed with implementation as set forth in the QAPP. The QAPP shall

include a description of the method(s) selected for identifying the sources of Mercury in addition to any other relevant information. The QAPP shall include a specific time line specifying when each of the steps will be taken. The new effluent limits for Mercury are deferred for the term of this compliance schedule, unless the effluent limits can be met at an earlier date. The permittee shall notify the Compliance Data Section of OWQ as soon as the effluent limits for Mercury can be met at each outfall identified above. Upon receipt of such notification by OWQ, the final limits for Mercury will become effective, but no later than Fifty-four (54) months from the effective date of this permit. Monitoring and reporting of the effluent at Outfalls 002, 009, 010, and 011 for this parameter is required during the interim period. The QAPP shall address, at a minimum, the following:

a. Identification of the sampling locations that will be utilized to evaluate potential sources of Mercury to Outfalls 002, 009, 010, and 011 (current and historic).

b. Development of a sampling plan to identify sources of Mercury.

c. Assessment of the potential pollution prevention activities for Mercury at the facility. The assessment should include a methodology for determining the feasibility of eliminating or reducing Mercury from the internal wastestreams identified for inclusion in the sampling plan.

2. The permittee shall submit a report to the Compliance Data Section of OWQ no later than Fifteen (15) months from the effective date of this permit. This report shall include detailed information on:

a. All sampling conducted during the previous 12 months for Mercury including all analytical results obtained up to the time of the report.

b. A description of any pollution prevention activities implemented as a result of the sampling results (such as replacement of raw or intermediate products containing excessive quantities of Mercury) that reduce or eliminate the addition of Mercury into Outfalls 002, 009, 010, and 011.

3. The permittee shall submit a QAPP report to the Compliance Data Section of OWQ no later than 27 months from the effective date of this permit. This report shall include detailed information on:

a. The results of all sampling performed during the previous 24 months to evaluate potential sources of Mercury to Outfalls 002, 009, 010, and 011.
b. The evaluation of short-term and long-term control measures, including, but not limited to, best management practices, pollution prevention activities and treatment technologies that will reduce the concentration of Mercury in the effluent from Outfalls 002, 009, 010, and 011.
c. A description of any control measures that were identified and implemented during the previous 24 months.
d. Any proposed or actual construction of additional treatment technology to reduce the concentration of Mercury in the effluent from Outfalls 002, 009, 010, and 011.
e. The anticipated date when the permittee will submit the Final Plan for Compliance (FPC) for the final effluent limits for Mercury.

4. The permittee shall submit a proposed Final Plan for Compliance (FPC) containing the source identification report for Mercury and the plan for implementing pollution prevent or installing treatment where feasible to achieve compliance with the final limits for Mercury no later than thirty (30) months after the effective date of this permit. IDEM will provide any comments within 30 days of receipt of the FPC. If comments are made, IDEM will provide the permittee with the opportunity to discuss the comments prior to implementation. If IDEM does not comment within 30 days of its receipt of the FPC, the permittee may proceed with implementation as set forth in the FPC.

5. The permittee shall submit a report to the Compliance Data Section of OWQ no later than Thirty-Nine (39) months from the effective date of this permit. This report shall include detailed information on:

   a. The implementation of pollution prevention activities such as replacement of raw or intermediate products containing excessive quantities of Mercury; or production practices that reduce or eliminate the addition of Mercury into the wastewater.
   b. The construction of treatment technology identified in the FPC for the reduction of Mercury in the effluent from Outfalls 002, 009, 010, and 011.
   c. the achievement of milestones identified in the FPC.
   d. the anticipated date when the discharge from Outfalls 002, 009, 010, and 011 can achieve compliance with the final effluent limits for Mercury.

6. The permittee shall submit a progress report to the Compliance Data Section of OWQ no later than Forty-Eight (48) months from the effective date of this permit. This report shall include detailed information on:

    a. The implementation of pollution prevention activities such as replacement of raw or intermediate products containing excessive quantities of Mercury; or production practices that reduce or eliminate the addition of Mercury into the wastewater.
    b. The construction of treatment technology identified in the FPC for the reduction of Mercury in the effluent from Outfalls 002, 009, 010, and 011.
    c. the achievement of milestones identified in the FPC.
    d. the anticipated date when the discharge from Outfalls 002, 009, 010, and 011 can achieve compliance with the final effluent limits for Mercury.

7. Within thirty (30) days of completion of any additional pollutant control equipment, the permittee shall file with the Industrial NPDES Permits Section of OWQ a notice of installation for the additional pollutant control equipment and a design summary of any modifications.

8. The permittee shall comply with the final effluent limitations for Mercury at Outfalls 002, 009, 010, and 011 no later than Fifty-four (54) months from the effective date of this permit.

9. If the permittee fails to comply with any deadline contained in the foregoing schedule, the permittee shall, within fourteen (14) days following the missed deadline, submit a written notice of noncompliance to the OWQ stating the cause of noncompliance, and remedial action taken or planned, and the probability of meeting the date fixed for compliance with final effluent limitations.

G. POLLUTANT MINIMIZATION PROGRAM

This permit contains water quality-based effluent limits (WQBEL) for total residual chlorine at Outfalls 002, 009, 010, and 011 that are less than the LOQ, therefore the permittee is required to develop and conduct a pollutant minimization program (PMP).

a. The goal of the pollutant minimization program shall be to maintain the effluent at or below the WQBEL. The pollutant minimization program shall include, but is not limited to, the following:

(1) Submit a control strategy designed to proceed toward the goal within 180 days of the effective date of this permit.

(2) Implementation of appropriate cost-effective control measures, consistent with the control strategy within 365 days of the effective date of this permit.

(3) Monitor as necessary to record the progress toward the goal.

(4) Submit an annual status to the Commissioner at the address listed in Part I.C.3.g. to the attention of the Office of Water Quality, Compliance Data Section, by January 31 of each year that includes the following information:

(i) All minimization program monitoring results for the previous year.

(ii) A list of potential sources of the pollutant.

(iii) A summary of all actions taken to reduce or eliminate the identified sources of the pollutant.

(5) A pollutant minimization program may include the submittal of pollution prevention strategies that use changes in production process technology, materials, processes, operations, or procedures to reduce or eliminate the source of the pollutant.

b. No pollutant minimization program is required if the permittee demonstrates that the discharge of a pollutant with a WQBEL below the LOQ is reasonably expected to be in compliance with the WQBEL at the point of discharge into the receiving water. This demonstration may include, but is not limited to, the following:

(1) Treatment information, including information derived from modeling the destruction of removal of the pollutant in the treatment process.

(2) Mass balance information.

(3) Fish tissue studies or other biological studies.

c. In determining appropriate cost-effective control measures to be implemented in a pollutant minimization program, the following factors may be considered:

(1) Significance of sources.

(2) Economic and technical feasibility.

(3) Treatability.

H. CHRONIC BIOMONITORING PROGRAM REQUIREMENTS

The 1977 Clean Water Act explicitly states, in Section 101(3) that it is the national policy that the discharge of toxic pollutants in toxic amounts be prohibited. In support of this policy the U.S. EPA in 1995 amended 40 CFR 136.3 (Tables IA and II) by adding testing method for measuring acute and short-term chronic toxicity of whole effluents and receiving waters. To adequately assess the character of the effluent, and the effects of the effluent on aquatic life, the permittee shall conduct Whole Effluent Toxicity Testing. Part I.H.1 describes the testing procedures, Part I.H.2 describes the Toxicity Reduction Evaluation which is only required if the effluent demonstrated toxicity, as described in Part I.H.1.f.

1. Whole Effluent Toxicity Tests

Within 90 days of the effective date of the permit, the permittee shall initiate the series of bioassay tests described below to monitor the toxicity of the discharge from Outfalls 009, 011, and 012. If toxicity is demonstrated at either outfall, as defined under Part I.H.1.f. below, the permittee is required to conduct a toxicity reduction evaluation (TRE).

a. Bioassay Test Procedures and Data Analysis

(1) All test organisms, test procedures and quality assurance criteria used shall be in accordance with the Short-term Methods for Estimating the Chronic Toxicity of Effluents and Receiving Water to Freshwater Organisms; Fourth Edition Section 13, Cladoceran (*Ceriodaphnia dubia*) Survival and Reproduction Test Method 1002.0; and Section 11, Fathead Minnow (*Pimephales promelas*) Larval Survival and Growth Test Method, (1000.0) EPA 821-R-02-013, October 2002, or most recent update.

(2) Any circumstances not covered by the above methods, or that required deviation from the specified methods shall first be approved by the IDEM's NPDES Permits Branch.

(3) The determination of effluent toxicity shall be made in accordance with the Data Analysis general procedures for chronic toxicity endpoints as outlined in Section 9, and in Sections 11 and 13 of the respective Test Method (1000.0 and 1002.0) of Short-term Methods of Estimating the Chronic Toxicity of Effluent and Receiving Water to Freshwater Organisms (EPA-821-R-02-013), Fourth Edition, October 2002, or most recent update.

b. Types of Bioassay Tests

The permittee shall conduct 7-day Daphnid (*Ceriodaphnia dubia*) Survival and Reproduction Test and a 7-day Fathead Minnow (*Pimephales promelas*) Larval Survival and Growth Test on samples of final effluent. All tests will be conducted on 24-hour composite samples of final effluent. All test solutions shall be renewed daily. On days three and five fresh 24-hour composite samples of the effluent collected on alternate days shall be used to renew the test solutions.

If, in any control, more than 10% of the test organisms die in 96 hours, or more than 20% of the test organisms die in 7 days, that test shall be repeated. In addition, if in the *Ceriodaphnia* test control the number of newborns produced per surviving female is less than 15, or if 60% of surviving control females have less than three broods; and in the fathead minnow test if the mean dry weight of 7-day old surviving fish in the control group is less than 0.25 mg, that test shall also be repeated. Such testing will determine whether the effluent affects the survival, reproduction, and/or growth of the test organisms. Results of all tests regardless of completion must be reported to IDEM.

c. Effluent Sample Collection and Chemical Analysis

(1) Samples taken for the purposes of Whole Effluent Toxicity Testing will be taken at a point that is representative of the discharge, but prior to discharge. The maximum holding time for whole effluent is 36 hours for a 24 hour composite sample. Bioassay tests must be started within 36 hours after termination of the 24 hour composite sample collection. Bioassay of effluent sampling may be coordinated with other permit sampling requirements as appropriate to avoid duplication.

(2) Chemical analysis must accompany each effluent sample taken for bioassay test, especially the sample taken for the repeat or confirmation test as outlined in Part I.H.1.f.3. below. The analysis detailed under Part I.A.2 for Outfall 009, Part I.A.5 for Outfall 011, and PartI.A.8 for Outfall 012 should be conducted for the effluent sample. Chemical analysis must comply with approved EPA test methods.

d. Testing Frequency and Duration

The chronic toxicity test specified in Part I.H.1.b. above shall be conducted monthly for three (3) months initially and thereafter at least once every quarter for the duration of the permit. After three tests have been completed, that indicate no toxicity as defined in section f. below, the permittee may reduce the number of species tested to only include the most sensitive to the toxicity in the effluent. In the absence of toxicity with either species in the monthly testing for three (3) months in the current tests, sensitive species will be selected based on frequency and failure of whole effluent toxicity tests with one or the other species in the immediate past.

If toxicity is demonstrated as defined under Part I.H.1.f., the permittee is required to conduct a toxicity reduction evaluation (TRE) as specified in Part I.H.2.

e. Reporting

(1) Results shall be reported according to EPA 821-R-02-013, October 2002, Section 10 (Report Preparation). Two copies of the completed report for each test shall be submitted to the Compliance Data Section, Office of Water Quality of the IDEM no later than sixty days after completion of the test.

(2) For quality control, the report shall include the results of appropriate standard reference toxic pollutant tests for chronic endpoints and historical reference toxic pollutant data with mean values and appropriate ranges for the respective test species *Ceriodaphnia dubia* and *Pimephales promelas*. Biomonitoring reports must also include copies of Chain-of-Custody Records and Laboratory raw data sheets.

(3) Statistical procedures used to analyze and interpret toxicity data including critical values of significance to evaluate each point of toxicity should be described and included as part of the biomonitoring report.

f. Demonstration of Toxicity

(1) Acute toxicity will be demonstrated if the effluent is observed to have exceeded 1.0 TU_a (acute toxic units) based on 100% effluent for the test organism in 48 and 96 hours for *Ceriodaphnia dubia* or *Pimephales promelas*, respectively.

(2) Chronic toxicity will be demonstrated if the effluent is observed to have exceeded the levels specified below for *Ceriodaphnia dubia* or *Pimephales promelas*:

Outfall	Chronic Toxicity Level	Units
009	2.2	TUc
011	5.8	TUc
012	1.0	TUc

(3) If toxicity is found in any of the tests as specified above, a confirmation toxicity test using the specified methodology and same test species shall be conducted within two weeks of the completion of the failed test to confirm results. During the sampling for any confirmation test the permittee shall also collect and preserve sufficient effluent samples for use in any Toxicity Identification Evaluation (TIE) and/or Toxicity Reduction Evaluation (TRE), if necessary. If any two (2) consecutive tests, including any and all confirmation tests, indicate the presence of toxicity, the permittee must begin the implementation of a Toxicity Reduction Evaluation (TRE) as described below. The whole effluent toxicity tests required above may be suspended (upon approval from IDEM) while the TRE/TIE are being conducted.

g. Definitions

(1) TU_c is defined as 100/NOEC or $100/IC_{25}$, where the NOEC or IC_{25} are expressed as a percent effluent in the test medium.

(2) TU_a is defined as $100/LC_{50}$ where the LC_{50} is expressed as a percent effluent in the test medium of an acute whole

effluent toxicity (WET) test that is statistically or graphically estimated to be lethal to fifty percent (50%) of the test organisms.

(3) "Inhibition concentration 25" or "IC_{25}" means the toxicant (effluent) concentration that would cause a twenty-five percent (25%) reduction in a nonquantal biological measurement for the test population. For example, the IC_{25} is the concentration of toxicant (effluent) that would cause a twenty-five percent (25%) reduction in mean young per female or in growth for the test population.

(4) "No observed effect concentration" or "NOEC" is the highest concentration of toxicant (effluent) to which organisms are exposed in a full life cycle or partial life cycle (short term) test, that causes no observable adverse effects on the test organisms, that is, the highest concentration of toxicant (effluent) in which the values for the observed responses are not statistically significantly different from the controls.

2. Toxicity Reduction Evaluation (TRE) Schedule of Compliance

The development and implementation of a TRE (including any post-TRE biomonitoring requirements) is only required if toxicity is demonstrated as defined in Part I.H.1.f, above.

a. Development of TRE Plan

Within 90 days of determination of toxicity, the permittee shall submit plans for an effluent toxicity reduction evaluation (TRE) to the Compliance Data Section, Office of Water Quality of the IDEM. The TRE plan shall include appropriate measures to characterize the causative toxicants and the variability associated with these compounds. Guidance on conducting effluent toxicity reduction evaluations is available from EPA and from the EPA publications list below:

(1) Methods for Aquatic Toxicity Identification Evaluations:

Phase I Toxicity Characteristics Procedures, Second Edition (EPA/600/6-91/003, February 1991.

Phase II Toxicity Identification Procedures (EPA 600/R-92/080), September 1993.

Phase III Toxicity Confirmation Procedures (EPA 600/R-92/081), September 1993.

(2) Toxicity Identification Evaluation: Characterization of Chronically Toxic Effluents, Phase I. EPA/600/6-91/005F, May 1992.

(3) Generalized Methodology for Conducting Industrial Toxicity Reduction Evaluations (TREs), (EPA/600/2-88/070), April 1989.

(4) Toxicity Reduction Evaluation Protocol for Municipal Wastewater Treatments Plants (EPA/833-B-99-022) August 1999.

b. Conduct the Plan

Within 30 days after the submission of the TRE plan to IDEM, the permittee must initiate an effluent TRE consistent with the TRE plan. Progress reports shall be submitted every 90 days to the Compliance Data Section, Office of Water Quality of the IDEM beginning 90 days after initiation of the TRE study.

c. Reporting

Within 90 days of the TRE study completion, the permittee shall submit to the Compliance Data Section, Office of Water Quality of the IDEM, the final study results and a schedule for reducing the toxicity to acceptable levels through control of the toxicant source or treatment of whole effluent.

d. Compliance Date

The permittee shall complete items a, b, and c from Section 2 above and reduce the toxicity to acceptable levels as soon as possible, but <u>no later than three years after the date of determination of toxicity</u>.

e. Post-TRE Biomonitoring Requirements (Only Required After Completion of a TRE)

After the TRE, the permittee shall conduct monthly toxicity tests with 2 or more species for a period of three months. Should three consecutive monthly tests demonstrate no toxicity, the permittee

may reduce the number of species tested to only include the species demonstrated to be most sensitive to the toxicity in the effluent, (see Part I.H.1.d. above for more specifics on this topic), and conduct chronic tests quarterly for the duration of the permit.

If toxicity is demonstrated, as defined in Part I.H.1.f. above, after the initial three month period, testing must revert to a TRE as described in Part I.H.2 (TRE) above.

I. ADDITIONAL REPORTING OF PARAMETERS

The permittee shall establish a monitoring program to establish a data base for the parameters listed below at Outfalls 002, 009[2], 010[2], and 011[2]. The information gathered from the monitoring program will aid in the next NPDES permit renewal and shall be submitted to IDEM with the next renewal application. The monitoring program will consist of twelve (12) consecutive months of data. The monitoring program will begin no later than the thirty-sixth (36) months from the effective date of the permit and will last for twelve (12) consecutive months.

	Quantity or Loading			Quality or Concentration			Monitoring	Requirements
Parameter	Monthly Average	Daily Maximum	Units	Monthly Average	Daily Maximum	Units	Measurement Frequency	Sample Type
Cyanide, Free[1]	Report	Report	lbs/day	Report	Report	mg/l	2 X Month	Grab
Fluoride	Report	Report	lbs/day	Report	Report	mg/l	2 X Month	24 Hr. Composite

[1] Sample preservation procedures and maximum allowable holding times for total cyanide, or available (free) cyanide are prescribed in Table II of 40 CFR Part 136. Note the footnotes specific to cyanide. Preservation and holding time information in Table II takes precedence over information in specific methods or elsewhere.

Parameter	Test Method	LOD	LOQ
Cyanide, Free	4500-CN-G	5 ug/l	16 ug/l
Cyanide, Free	1677	0.5 ug/l	1.6 ug/l

[2] The gross ammonia values used to determine the net limits at Outfalls 009, 010, and 011 should be submitted with the next renewal application. The data should be provided via a spreadsheet in electronic form.

J. REOPENING CLAUSES

This permit may be modified, or alternately, revoked and reissued, after public notice and opportunity for hearing:

1. to comply with any applicable effluent limitation or standard issued or approved under 301(b)(2)(C),(D) and (E), 304 (b)(2), and 307(a)(2) of the Clean Water Act, if the effluent limitation or standard so issued or approved:

   a. contains different conditions or is otherwise more stringent than any effluent limitation in the permit; or

   b. controls any pollutant not limited in the permit.

2. to incorporate any of the reopening clause provisions cited at 327 IAC 5-2-16.

3. to include whole effluent toxicity limitations or to include limitations for specific toxicants if the results of the biomonitoring and/or the TRE study indicate that such limitations are necessary to meet Indiana Water Quality Standards.

4. to include a case-specific Limit of Detection (LOD) and/or Limit of Quantitation (LOQ). The permittee must demonstrate that such action is warranted in accordance with the procedures specified under Appendix B, 40 CFR Part 136, using the most sensitive analytical methods approved by EPA under 40 CFR Part 136, or approved by the Commissioner.

5. this permit may be modified or revoked and reissued after public notice and opportunity for hearing to revise or remove the requirements of the pollutant minimization program, if supported by information generated as a result of the program.

6. to reduce the mercury monitoring frequency if twelve (12) months (six (6) consecutive samples) of monitoring data at Outfall 012 demonstrate there is not a reasonable potential for mercury to exceed Indiana water quality standards; or to include effluent limitations for mercury, if mercury is found to be discharged at a level that will cause, have the reasonable potential to cause, or contribute to an excursion above the mercury water quality criterion.

7. to specify the use of a different analytical method if a more sensitive analytical method has been specified in or approved under 40 CFR 136 or approved by the Commissioner to monitor for the presence and amount in the effluent of the pollutant for which the WQBEL is established. The permit shall specify, in accordance with 327 IAC 5-2-11.6(h)(2)(B), the LOD and LOQ that can be achieved by use of the specified analytical method.

8. to review the monitoring requirements pursuant to 40 CFR 122.44(a)(2). The permittee may request, in writing, a review of categorical monitoring requirements. Upon review by IDEM, the permit may be modified, to reduce or delete the monitoring requirements.

9. to modify the 301(g) effluent limitations for ammonia-N and total phenols. At any time during the term of this NPDES permit, the permittee may request modification of Section 301(g) effluent limits. Such modified limits may be applied at Outfalls 509, 009, 010 and 011, or any combination thereof.

PART II

STANDARD CONDITIONS FOR NPDES PERMITS

A. GENERAL CONDITIONS

1. Duty to Comply

The permittee shall comply with all terms and conditions of this permit in accordance with 327 IAC 5-2-8(1) and all other requirements of 327 IAC 5-2-8. Any permit noncompliance constitutes a violation of the Clean Water Act and IC 13 and is grounds for enforcement action or permit termination, revocation and reissuance, modification, or denial of a permit renewal application.

It shall not be a defense for a permittee in an enforcement action that it would have been necessary to halt or reduce the permitted activity in order to maintain compliance with the conditions of the permit.

2. Duty to Mitigate

In accordance with 327 IAC 5-2-8(3), the permittee shall take all reasonable steps to minimize or correct any adverse impact to the environment resulting from noncompliance with this permit. During periods of noncompliance, the permittee shall conduct such accelerated or additional monitoring for the affected parameters, as appropriate or as requested by IDEM, to determine the nature and impact of the noncompliance.

3. Duty to Reapply

If the permittee wishes to continue an activity regulated by this permit after the expiration date of this permit, the permittee must obtain and submit an application for renewal of this permit in accordance with 327 IAC 5-2-8(2). It is the permittee's responsibility to obtain and submit the application. In accordance with 327 IAC 5-2-3(c), the owner of the facility or operation from which a discharge of pollutants occurs is responsible for applying for and obtaining the NPDES permit, except where the facility or operation is operated by a person other than an employee of the owner in which case it is the operator's responsibility to apply for and obtain the permit. Pursuant to 327 IAC 5-3-2(a)(2), the application must be submitted at least 180 days before the expiration date of this permit. This deadline may be extended if:

a. permission is requested in writing before such deadline;

b. IDEM grants permission to submit the application after the deadline; and

c. the application is received no later than the permit expiration date.

4. Permit Transfers

In accordance with 327 IAC 5-2-8(4)(D), this permit is nontransferable to any person except in accordance with 327 IAC 5-2-6(c). This permit may be transferred to another person by the permittee, without modification or revocation and reissuance being required under 327 IAC 5-2-16(c)(1) or 16(e)(4), if the following occurs:

a. the current permittee notified the Commissioner at least thirty (30) days in advance of the proposed transfer date.

b. a written agreement containing a specific date of transfer of permit responsibility and coverage between the current permittee and the transferee (including acknowledgment that the existing permittee is liable for violations up to that date, and the transferee is liable for violations from that date on) is submitted to the Commissioner.

c. the transferee certifies in writing to the Commissioner their intent to operate the facility without making such material and substantial alterations or additions to the facility as would significantly change the nature or quantities of pollutants discharged and thus constitute cause for permit modification under 327 IAC 5-2-16(d). However, the Commissioner may allow a temporary transfer of the permit without permit modification for good cause, e.g., to enable the transferee to purge and empty the facility's treatment system prior to making alterations, despite the transferee's intent to make such material and substantial alterations or additions to the facility.

d. the Commissioner, within thirty (30) days, does not notify the current permittee and the transferee of the intent to modify, revoke and reissue, or terminate the permit and to require that a new application be filed rather than agreeing to the transfer of the permit.

The Commissioner may require modification or revocation and reissuance of the permit to identify the new permittee and incorporate such other requirements as may be necessary under the Clean Water Act or state law.

5. Permit Actions

In accordance with 327 IAC 5-2-16(b) and 327 IAC 5-2-8(4), this permit may be modified, revoked and reissued, or terminated for cause, including, but not limited to, the following:

a. Violation of any terms or conditions of this permit;

b. Failure of the permittee to disclose fully all relevant facts or misrepresentation of any relevant facts in the application, or during the permit issuance process; or

c. A change in any condition that requires either a temporary or a permanent reduction or elimination of any discharge controlled by the permit, e.g., plant closure, termination of discharge by connection to a POTW, a change in state law that requires the reduction or elimination of the discharge, or information indicating that the permitted discharge poses a substantial threat to human health or welfare.

Filing of either of the following items does not stay or suspend any permit condition: (1) a request by the permittee for a permit modification, revocation and reissuance, or termination, or (2) submittal of information specified in Part II.A.3 of the permit including planned changes or anticipated noncompliance.

The permittee shall submit any information that the permittee knows or has reason to believe would constitute cause for modification or revocation and reissuance of the permit at the earliest time such information becomes available, such as plans for physical alterations or additions to the permitted facility that:

1. could significantly change the nature of, or increase the quantity of pollutants discharged; or
2. the commissioner may request to evaluate whether such cause exists.

In accordance with 327 IAC 5-1-3(a)(5), the permittee must also provide any information reasonably requested by the Commissioner.

6. Property Rights

Pursuant to 327 IAC 5-2-8(6) and 327 IAC 5-2-5(b), the issuance of this permit does not convey any property rights of any sort or any exclusive privileges, nor does it authorize any injury to persons or private property or invasion of other private rights, any infringement of federal, state, or local laws or regulations. The issuance of the permit also does not preempt any duty to obtain any other state, or local assent required by law for the discharge or for the construction or operation of the facility from which a discharge is made.

7. Severability

In accordance with 327 IAC 1-1-3, the provisions of this permit are severable and, if any provision of this permit or the application of any provision of this permit to any person or circumstance is held invalid, the invalidity shall not affect any other

provisions or applications of the permit which can be given effect without the invalid provision or application.

8. Oil and Hazardous Substance Liability

Nothing in this permit shall be construed to relieve the permittee from any responsibilities, liabilities, or penalties to which the permittee is or may be subject to under Section 311 of the Clean Water Act.

9. State Laws

Nothing in this permit shall be construed to preclude the institution of any legal action or relieve the permittee from any responsibilities, liabilities, or penalties established pursuant to any applicable state law or regulation under authority preserved by Section 510 of the Clean Water Act or state law.

10. Penalties for Violation of Permit Conditions

Pursuant to IC 13-30-4, a person who violates any provision of this permit, the water pollution control laws; environmental management laws; or a rule or standard adopted by the Water Pollution Control Board is liable for a civil penalty not to exceed twenty-five thousand dollars ($25,000) per day of any violation.

Pursuant to IC 13-30-5, a person who obstructs, delays, resists, prevents, or interferes with (1) the department; or (2) the department's personnel or designated agent in the performance of an inspection or investigation performed under IC 13-14-2-2 commits a class C infraction.

Pursuant to IC 13-30-10-1.5(k), a person who willfully or recklessly violates any NPDES permit condition or filing requirement, any applicable standards or limitations of IC 13-18-3-2.4, IC 13-18-4-5, IC 13-18-8, IC 13-18-9, IC 13-18-10, IC 13-18-12, IC 13-18-14, IC 13-18-15, or IC 13-18-16, or who knowingly makes any false material statement, representation, or certification in any NPDES form, notice, or report commits a Class C misdemeanor.

Pursuant to IC 13-30-10-1.5(l), an offense under IC 13-30-10-1.5(k) is a Class D felony if the offense results in damage to the environment that renders the environment unfit for human or vertebrate animal life. An offense under IC 13-30-10-1.5(k) is a Class C felony if the offense results in the death of another person.

11. Penalties for Tampering or Falsification

In accordance with 327 IAC 5-2-8(9), the permittee shall comply with monitoring, recording, and reporting requirements of this permit. The Clean

Water Act, as well as IC 13-30-10-1, provides that any person who knowingly or intentionally (a) destroys, alters, conceals, or falsely certifies a record that is required to be maintained under the terms of a permit issued by the department; and may be used to determine the status of compliance, (b) renders inaccurate or inoperative a recording device or a monitoring device required to be maintained by a permit issued by the department, or (c) falsifies testing or monitoring data required by a permit issued by the department commits a Class B misdemeanor.

12. Toxic Pollutants

If any applicable effluent standard or prohibition (including any schedule of compliance specified in such effluent standard or prohibition) is established under Section 307(a) of the Clean Water Act for a toxic pollutant injurious to human health, and that standard or prohibition is more stringent than any limitation for such pollutant in this permit, this permit shall be modified or revoked and reissued to conform to the toxic effluent standard or prohibition in accordance with 327 IAC 5-2-8(5). Effluent standards or prohibitions established under Section 307(a) of the Clean Water Act for toxic pollutants injurious to human health are effective and must be complied with, if applicable to the permittee, within the time provided in the implementing regulations, even absent permit modification.

13. Wastewater treatment plant and certified operators

The permittee shall have the wastewater treatment facilities under the responsible charge of an operator certified by the Commissioner in a classification corresponding to the classification of the wastewater treatment plant as required by IC 13-18-11-11 and 327 IAC 5-22. In order to operate a wastewater treatment plant the operator shall have qualifications as established in 327 IAC 5-22-7.

327 IAC 5-22-10.5(a) provides that a certified operator may be designated as being in responsible charge of more than one (1) wastewater treatment plant, if it can be shown that he will give adequate supervision to all units involved. Adequate supervision means that sufficient time is spent at the plant on a regular basis to assure that the certified operator is knowledgeable of the actual operations and that test reports and results are representative of the actual operations conditions. In accordance with 327 IAC 5-22-3(11), "responsible charge operator" means the person responsible for the overall daily operation, supervision, or management of a wastewater facility.

Pursuant to 327 IAC 5-22-10(4), the permittee shall notify IDEM when there is a change of the person serving as the certified operator in responsible charge of the wastewater treatment facility. The notification shall be made no later than thirty (30) days after a change in the operator.

14. Construction Permit

In accordance with IC 13-14-8-11.6, a discharger is not required to obtain a state permit for the modification or construction of a water pollution treatment or control facility if the discharger has an effective NPDES permit.

If the discharger modifies their existing water pollution treatment or control facility or constructs a new water pollution treatment or control facility for the treatment or control of any new influent pollutant or increased levels of any existing pollutant, then, within thirty (30) days after commencement of operation, the discharger shall file with the Department of Environment Management a notice of installation for the additional pollutant control equipment and a design summary of any modifications.

The notice and design summary shall be sent to the Office of Water Quality - Mail Code 65-42, Industrial NPDES Permits Section, 100 North Senate Avenue, Indianapolis, IN 46204-2251.

15. Inspection and Entry

In accordance with 327 IAC 5-2-8(7), the permittee shall allow the Commissioner, or an authorized representative, (including an authorized contractor acting as a representative of the Commissioner) upon the presentation of credentials and other documents as may be required by law, to:

a. Enter upon the permittee's premises where a point source, regulated facility, or activity is located or conducted, or where records must be kept pursuant to the conditions of this permit;

b. Have access to and copy, at reasonable times, any records that must be kept under the terms and conditions of this permit;

c. Inspect at reasonable times any facilities, equipment or methods (including monitoring and control equipment), practices, or operations regulated or required pursuant to this permit; and

d. Sample or monitor at reasonable times, any discharge of pollutants or internal wastestreams for the purposes of evaluating compliance with the permit or as otherwise authorized.

16. New or Increased Discharge of Pollutants

This permit prohibits the permittee from undertaking any deliberate action that would result in a new or increased discharge of a bioaccumulative chemical of concern (BCC) or a new or increased permit limit for a pollutant parameter that is

not a BCC unless one of the following is completed prior to the commencement of the action:

a. Information is submitted to the Commissioner demonstrating that the proposed new or increased discharges will not cause a significant lowering of water quality as defined under 327 IAC 5-2-11.3(b)(1). Upon review of this information, the Commissioner may request additional information or may determine that the proposed increase is a significant lowering of water quality and require the submittal of an antidegradation demonstration.

b. An antidegradation demonstration is submitted to and approved by the Commissioner in accordance with 327 IAC 5-2-11.3(b)(3) through (6).

B. MANAGEMENT REQUIREMENTS

1. Proper Operation and Maintenance

The permittee shall at all times maintain in good working order and efficiently operate all facilities and systems (and related appurtenances) for the collection and treatment which are installed or used by the permittee and which are necessary for achieving compliance with the terms and conditions of this permit in accordance with 327 IAC 5-2-8(8).

Neither 327 IAC 5-2-8(8), nor this provision, shall be construed to require the operation of installed treatment facilities that are unnecessary for achieving compliance with the terms and conditions of the permit.

2. Bypass of Treatment Facilities

Pursuant to 327 IAC 5-2-8(11):

a. Terms as defined in 327 IAC 5-2-8(11)(A):

(1) "Bypass" means the intentional diversion of a waste stream from any portion of a treatment facility.

(2) "Severe property damage" means substantial physical damage to property, damage to the treatment facilities which would cause them to become inoperable, or substantial and permanent loss of natural resources which can reasonably be expected to occur in the absence of a

bypass. Severe property damage does not mean economic loss caused by delays in production.

b. The permittee may allow a bypass to occur that does not cause a violation of the effluent limitations in the permit, but only if it is also for essential maintenance to assure efficient operation. These bypasses are not subject to the provisions of Part II.B.2.c., e, and f of this permit.

c. Bypasses, as defined in (a) above, are prohibited, and the Commissioner may take enforcement action against a permittee for bypass, unless the following occur:

(1) The bypass was unavoidable to prevent loss of life, personal injury, or severe property damage, as defined above;

(2) There were no feasible alternatives to the bypass, such as the use of auxiliary treatment facilities, retention of untreated wastes, or maintenance during normal periods of equipment downtime. This condition is not satisfied if adequate back-up equipment should have been installed in the exercise of reasonable engineering judgment to prevent a bypass that occurred during normal periods of equipment downtime or preventive maintenance; and

(3) The permittee submitted notices as required under Part II.B.2.e; or

(4) The condition under Part II.B.2.b above is met.

d. Bypasses that result in death or acute injury or illness to animals or humans must be reported in accordance with the "Spill Response and Reporting Requirements" in 327 IAC 2-6.1, including calling 888/233-7745 as soon as possible, but within two (2) hours of discovery.

e. The permittee must provide the Commissioner with the following notice:

(1) If the permittee knows or should have known in advance of the need for a bypass (anticipated bypass), it shall submit prior written notice. If possible, such notice shall be provided at least ten (10) days before the date of the bypass for approval by the Commissioner.

(2) The permittee shall orally report an unanticipated bypass that exceeds any effluent limitations in the permit within 24 hours of becoming aware of the bypass noncompliance. The permittee must also provide a written report within five (5) days of the time the permittee becomes aware of the bypass event. The written report must contain a description of the noncompliance and its cause; the period of noncompliance, including exact dates and times; if the cause of noncompliance has not been corrected, the anticipated time it is expected to continue; and steps taken or planned to reduce, eliminate and prevent recurrence of the bypass event.

f. The Commissioner may approve an anticipated bypass, after considering its adverse effects, if the Commissioner determines that it will meet the conditions listed above in Part II.B.2.c. The Commissioner may impose any conditions determined to be necessary to minimize any adverse effects.

3. Upset Conditions

Pursuant to 327 IAC 5-2-8(12):

a. "Upset" means an exceptional incident in which there is unintentional and temporary noncompliance with technology-based permit effluent limitations because of factors beyond the reasonable control of the permittee. An upset does not include noncompliance to the extent caused by operational error, improperly designed treatment facilities, inadequate treatment facilities, lack of preventive maintenance, or careless or improper operation.

b. An upset shall constitute an affirmative defense to an action brought for noncompliance with such technology-based permit effluent limitations if the requirements of Paragraph c of this section, are met.

c. A permittee who wishes to establish the affirmative defense of upset shall demonstrate, through properly signed, contemporaneous operating logs or other relevant evidence, that:

(1) An upset occurred and the permittee has identified the specific cause(s) of the upset, if possible;

(2) The permitted facility was at the time being operated in compliance with proper operation and maintenance procedures;

(3) The permittee complied with any remedial measures required under Part II.A.2; and

(4) The permittee submitted notice of the upset as required in the "Twenty-Four Hour Reporting Requirements," Part II.C.3, or 327 IAC 2-6.1, whichever is applicable.

4. Removed Substances

Solids, sludges, filter backwash, or other pollutants removed from or resulting from treatment or control of wastewaters shall be disposed of in a manner such as to prevent any pollutant from such materials from entering waters of the State and to be in compliance with all Indiana statutes and regulations relative to liquid and/or solid waste disposal. The discharge of pollutants in treated wastewater is allowed in compliance with the applicable effluent limitations in Part I. of this permit.

C. REPORTING REQUIREMENTS

1. Planned Changes in Facility or Discharge

Pursuant to 327 IAC 5-2-8(10)(F), the permittee shall give notice to the Commissioner as soon as possible of any planned physical alterations or additions to the permitted facility. In this context, permitted facility refers to a point source discharge, not a wastewater treatment facility. Notice is required only when either of the following applies:

a. The alteration or addition may meet one of the criteria for determining whether the facility is a new source as defined in 327 IAC 5-1.5.

b. The alteration or addition could significantly change the nature of, or increase the quantity of, pollutants discharged. This notification applies to pollutants that are subject neither to effluent limitations in Part I.A. nor to notification requirements in Part II.C.9. of this permit.

Following such notice, the permit may be modified to revise existing pollutant limitations and/or to specify and limit any pollutants not previously limited.

2. Monitoring Reports

Pursuant to 327 IAC 5-2-8(9) and 327 IAC 5-2-13 through 15, monitoring results shall be reported at the intervals and in the form specified in "Monitoring Reports", Part I.C.2.

3. Twenty-Four Hour Reporting Requirements

Pursuant to 327 IAC 5-2-8(10)(C), the permittee shall orally report to the Commissioner information on the following types of noncompliance within 24 hours from the time permittee becomes aware of such noncompliance. If the noncompliance meets the requirements of item b (Part II.C.3.b) or 327 IAC 2-6.1, then the report shall be made within those prescribed time frames.

a. Any unanticipated bypass which exceeds any effluent limitation in the permit;

b. Any noncompliance which may pose a significant danger to human health or the environment. Reports under this item shall be made as soon as the permittee becomes aware of the noncomplying circumstances;

c. Any upset (as defined in Part II.B.3 above) that causes an exceedance of any effluent limitation in the permit;

The permittee can make the oral reports by calling (317)232-8670 during regular business hours or by calling (317) 233-7745 ((888)233-7745 toll free in Indiana) during non-business hours. A written submission shall also be provided within 5 days of the time the permittee becomes aware of the circumstances. The written submission shall contain a description of the noncompliance and its cause; the period of noncompliance, including exact dates and times, and, if the noncompliance has not been corrected, the anticipated time it is expected to continue; and steps taken or planned to reduce and eliminate the noncompliance and prevent its recurrence. The Commissioner may waive the written report on a case-by-case basis if the oral report has been received within 24 hours. Alternatively the permittee may submit a "Bypass Fax Report" or a "Noncompliance Notification Report", whichever is appropriate, to IDEM at (317) 232-8637. If a complete fax submittal is sent within 24 hours of the time that the permittee became aware of the occurrence, then the fax report will satisfy both the oral and written reporting requirements.

4. Other Noncompliance

Pursuant to 327 IAC 5-2-8(10)(D), the permittee shall report any instance of noncompliance not reported under the "Twenty-Four Hour Reporting Requirements" in Part II.C.3, or any compliance schedules at the time the pertinent Discharge Monitoring Report is submitted. The report shall contain the information specified in Part II.C.3.

5. Other Information

Pursuant to 327 IAC 5-2-8(10)(E), where the permittee becomes aware of a failure to submit any relevant facts or submitted incorrect information in a permit application or in any report, the permittee shall promptly submit such facts or corrected information to the Commissioner.

6. Signatory Requirements

Pursuant to 327 IAC 5-2-22 and 327 IAC 5-2-8(14):

a. All reports required by the permit and other information requested by the Commissioner shall be signed and certified by a person described below or by a duly authorized representative of that person:

(1) For a corporation: by a responsible corporate officer defined as a president, secretary, treasurer, any vice-president of the corporation in charge of a principal business function, or any other person who performs similar policymaking or decision making functions for the corporation or the manager of one or more manufacturing, production or operating facilities employing more than two hundred fifty (250) persons or having the gross annual sales or expenditures exceeding twenty-five million dollars ($25,000,000) (in second quarter 1980 dollars), if authority to sign documents has been assigned or delegated to the manager in accordance with corporate procedures.

(2) For a partnership or sole proprietorship: by a general partner or the proprietor, respectively; or

(3) For a Federal, State, or local government body or any agency or political subdivision thereof: by either a principal executive officer or ranking elected official.

b. A person is a duly authorized representative only if:

(1) The authorization is made in writing by a person described above.

(2) The authorization specifies either an individual or a position having responsibility for the overall operation of the regulated facility or activity, such as the position of plant manager, operator of a well or a well field, superintendent, or a position of equivalent responsibility. (A duly authorized representative may thus be either a named individual or any individual occupying a named position.); and

(3) The authorization is submitted to the Commissioner.

c. Certification. Any person signing a document identified under Part II.C.6. shall make the following certification:

"I certify under penalty of law that this document and all attachments were prepared under my direction or supervision in accordance with a system designed to assure that qualified personnel properly gather and evaluate the information submitted. Based on my inquiry of the person or persons who manage the system, or those persons directly responsible for gathering the information, the information submitted is, to the best of my knowledge and belief, true, accurate, and complete. I am aware that there are significant penalties for submitting false information, including the possibility of fine and imprisonment for knowing violations."

7. Availability of Reports

Except for data determined to be confidential under 327 IAC 12.1, all reports prepared in accordance with the terms of this permit shall be available for public inspection at the offices of the Indiana Department of Environmental Management and the Regional Administrator. As required by the Clean Water Act, permit applications, permits, and effluent data shall not be considered confidential.

8. Penalties for Falsification of Reports

IC 13-30 and 327 IAC 5-2-8(14) provides that any person who knowingly makes any false statement, representation, or certification in any record or

other document submitted or required to be maintained under this permit, including monitoring reports or reports of compliance, shall, upon conviction, be punished by a fine of not more than $10,000 per violation, or by imprisonment for not more than 180 days per violation, or by both.

9. Changes in Discharge of Toxic Substances

Pursuant to 327 IAC 5-2-9, the permittee shall notify the Commissioner as soon as it knows or has reason to believe:

a. That any activity has occurred or will occur which would result in the discharge of any pollutant identified as toxic, pursuant to Section 307(a) of the Clean Water Act which is not limited in the permit, if that discharge will exceed the highest of the following "notification levels."

(1) One hundred micrograms per liter (100μg/l);

(2) Two hundred micrograms per liter (200 μg/l) for acrolein and acrylonitrile; five hundred micrograms per liter (500μg/l) for 2,4-dinitrophenol and 2-methyl-4,6-dinitophenol; and one milligram per liter (1mg/l) for antimony;

(3) Five (5) times the maximum concentration value reported for that pollutant in the permit application in accordance with 40 CFR 122.21(g)(7); or

(4) A notification level established by the Commissioner on a case-by-case basis, either at his own initiative or upon a petition by the permittee. This notification level may exceed the level specified in subdivisions (1), (2), or (3) but may not exceed the level which can be achieved by the technology-based treatment requirements applicable to the permittee under the CWA (see 327 IAC 5-5-2).

b. That any activity has occurred or will occur which would result in any discharge, on a non-routine or infrequent basis, of a toxic pollutant which is not limited in the permit, if that discharge will exceed the highest of the following "notification levels":

(1) Five hundred micrograms per liter (500 μg/l);

(2) One milligram per liter (1 mg/l) for antimony;

(3) Ten (10) times the maximum concentration value reported for that pollutant in the permit application in accordance with Sec. 122.21(g)(7).

(4) A notification level established by the Commissioner on a case-by-case basis, either at his own initiative or upon a petition by the permittee. This notification level may exceed the level specified in subdivisions (1), (2), or (3) but may not exceed the level which can be achieved by the technology-based treatment requirements applicable to the permittee under the CWA (see 327 IAC 5-5-2).

c. That it has begun or expects to begin to use or manufacture, as an intermediate or final product or byproduct, any toxic pollutant which was not reported in the permit application under 40 CFR 122.21(g)(9).

PART III
Other Requirements

A. Thermal Effluent Requirements

The thermal discharge shall be calculated for Outfalls 002, 009, 010, and 011. Such discharge shall be limited and monitored by the permittee as specified below.

a. Flow and temperature values used in thermal discharge calculations shall be taken from the same day of monitoring.

b. The thermal discharge shall be computed as follows:

Thermal Discharge (MBTU/Hr.) = Q x (To – Ti) x 0.3477

where,

-MBTU/Hr. = million Btu/Hr.
Q = 24 hour discharge flow, MGD
To = effluent temperature, °F
Ti = influent temperature, °F
0.3477 = conversion factor

c. Temperature shall be monitored as follows at Outfalls 002, 009, 010, and 011:

DISCHARGE LIMITATIONS

	Quantity or Loading			Quality or Concentration			Monitoring Requirements	
Parameter	Monthly Average	Daily Maximum	Units	Monthly Average	Daily Maximum	Units	Measurement Frequency	Sample Type
Temperature								
Intake [2]	----	----	----	Report	Report	°F	2 X Week	Grab
Outfall[1]	----	----	----	Report	Report	°F	2 X Week	Grab

[1] Temperature at Outfalls 002, 009, 010, and 011 shall be sampled between the hours of 12 pm and 4 pm. As an alternative to direct grab measurements during this time period the facility may install a more permanent temperature measuring device that will retain the highest temperature value during any given 24 hour period.

[2] On days when temperature is sampled at the outfall, temperature shall also be sampled at the intake supplying the most significant source of water to the outfall.

B. Biocides Concentration

The permittee must receive written permission from the IDEM if they desire to use any biocide or molluscicide other than chlorine. ArcelorMittal currently uses Sodium Hypochlorite (bleach/chlorine) for the control of zebra mussels. ArcelorMittal removes chlorine prior to discharge by using Sodium Bisulfate. Total Residual Chlorine (TRC) is limited at each of the affected final outfalls during periods of chlorination. The use of any biocide containing tributyl tin oxide in any closed or open cooling system is prohibited.

C. Polychlorinated Biphenyl

There shall be no discharge of polychlorinated biphenyl (PCBs) compounds such as those commonly used for transformer fluid.

PART IV

COOLING WATER INTAKE STRUCTURES-BEST TECHNOLOGY AVAILABLE (BTA) EVALUATION

1. Section 316(b) of the federal Clean Water Act (33 U.S.C. section 1326) requires that facilities minimize adverse environmental impact resulting from the operation of cooling water intake structures (CWIS) by using the "best technology available" (BTA). The only applicable federal regulation for implementing Section 316(b) at the ArcelorMittal Indiana Harbor West facility is 40 C.F.R. §125.90(b). This regulation requires that the BTA be determined using Best Professional Judgment (BPJ). The cooling water intake structures operated by ArcelorMittal Indiana Harbor West have been evaluated under BPJ and utilizing all available information to reach the following BTA determination. A discussion of the BPJ evaluation and a summary of the documentation submitted by ArcelorMittal can be found in the Fact Sheet.

   At this time IDEM has determined that the existing cooling water intake structures represent best technology available to minimize adverse environmental impact in accordance with Section 316(b) of the federal Clean Water Act (33 U.S.C. section 1326). This determination will be reassessed at the next permit reissuance to ensure that the CWISs continue to meet the requirements of Section 316(b) of the federal Clean Water Act (33 U.S.C. section 1326).

   ArcelorMittal Indiana Harbor West shall at all times properly operate and maintain the cooling water intake structure and associated equipment to minimize adverse environmental impact.

2. MONITORING REQUIREMENTS

   The purpose of the monitoring studies under this section shall be to further characterize the nature and extent of the environmental impacts, if any, from the CWISs in a scientifically valid manner. Impingement and entrainment have been determined to be appropriate measures for determining whether adverse environmental impacts have been minimized.

   a. Entrainment

      (i) Within one year of the effective date of the permit, ArcelorMittal will submit to IDEM a proposal for conducting a two-year entrainment study consistent with

this Paragraph a.(i) during the second and third year of the permit term at the Centralized Screen House serving the No. 2, Low Head, and Power House Pumping Stations. The proposal should be provided to IDEM at least 90 (ninety) days prior to the start of the proposed study.

The proposal should include appropriate sampling periods for the study based upon the expected spawning period for the species of interest. Sampling techniques should be appropriate for the water body and ensure that sufficient data are developed to allow for a scientifically valid estimate of potential entrainment impacts. Appropriate quality assurance/quality control procedures should be utilized.

(ii) Beginning in year two of the permit's term, ArcelorMittal will conduct the two-year entrainment study (described above) at the Centralized Screen House serving the No. 2, Low Head, and Power House Pumping Stations in accordance with the proposal submitted to IDEM under (a)(i) above.

(iii) Results of the entrainment study will be submitted to IDEM as soon after the completion of the study as possible but no later than one year after its completion.

(iv) Following the initial two-year study described in (a)(i)-(iii) above, ArcelorMittal will submit to IDEM every five years thereafter during the permit's effectiveness a proposal for conducting a one-year supplemental entrainment study that takes into account information developed during the prior studies and any material changes at the CWISs. Supplemental studies may be limited to the extent no material changes have occurred at the CWISs. These proposals shall be submitted to IDEM at least 90 (ninety) days prior to the start of the proposed study.

(v) ArcelorMittal will conduct the supplemental entrainment study described in (a)(iv)in accordance with its proposal.

(vi) Results of the supplemental entrainment study will be submitted to IDEM as soon after the completion of the study as possible but no later than one year after its completion.

b. Impingement

(i) Within one year of the effective date of the permit, ArcelorMittal will submit to IDEM a proposal for conducting a two-year impingement study consistent with this Paragraph b.(i) during the second and third year of the permit term at the Centralized Screen House serving the No. 2, Low Head, and Power House Pumping Stations. The proposal should be provided to IDEM at least 90 (ninety) days prior to the start of the proposed study.

The proposal should include appropriate sampling periods for the study based upon the availability of the species of interest to be impinged. Sampling techniques should be appropriate for the water body and ensure that sufficient data are developed to allow for a scientifically valid estimate of potential impingement impacts. Appropriate quality assurance/quality control procedures should be utilized.

(ii) Beginning in year two of the permit's term, ArcelorMittal will conduct the two-year impingement study (described above) at the Centralized Screen House serving the No. 2, Low Head, and Power House Pumping Stations in accordance with the proposal submitted to IDEM under (b)(i) above.

(iii) Results of the impingement study will be submitted to IDEM as soon after the completion of the study as possible but not later than one year after its completion.

(iv) Following the initial two-year study described in (b)(i)-(iii) above, ArcelorMittal will submit to IDEM every five years thereafter during the permit's effectiveness a proposal for conducting a one year supplemental impingement study that takes into account information developed during the prior years' studies and any material changes at the CWISs. Supplemental studies may be limited to the extent no material changes have occurred at the CWISs. These proposals shall be submitted to IDEM, at least 90 (ninety) days prior to the start of the proposed study.

(v) ArcelorMittal will conduct the supplemental impingement study described in (b)(iv) above in accordance with its proposal.

(vi) Results of each supplemental study will be submitted to IDEM as soon after the completion of each study as possible but no later than one year after its completion.

3. CHANGES DURING TERM OF PERMIT

ArcelorMittal shall provide advance notice to IDEM of any proposed changes to the CWISs or proposed changes to operations at the facility that affect the information taken into account in the current BTA evaluation.

4. INTAKE SCREEN WASH

The discharge of any Intake Screen Backwash shall meet the Narrative Water Quality Standards contained in Part I.B. of the permit.

5. FISH RETURN EVALUATION

Fish returns shall be evaluated for all intakes to determine if they minimize fish mortality. The permittee shall submit to IDEM an evaluation of options to minimize fish mortality within one year from the effective date of the permit. This evaluation should include time frames to implement these measures. The permittee will implement any options that IDEM identifies as BTA after the information becomes available.

STATE OF INDIANA
DEPARTMENT OF ENVIRONMENTAL MANAGEMENT

PUBLIC NOTICE NO: 2011 – 10G- F

DATE OF NOTICE: OCTOBER 26, 2011

The Office of Water Quality is issuing the NPDES permit renewal for ArcelorMittal Indiana Harbor, LLC – Indiana Harbor West, Permit No. IN0000205, and is issuing a new permit for the ArcelorMittal Indiana Harbor LLC-Central Wastewater Treatment Plant, Permit No. IN0063711. The Indiana Harbor West permit has been administratively extended since the permit's expiration date of September 29, 1991. During the renewal process ArcelorMittal requested that IDEM split the permit into two separate permits.

MAJOR – RENEWAL

ARCELORMITTAL INDIANA HARBOR, LLC –INDIANA HARBOR WEST, Permit No. IN0000205, LAKE COUNTY, 3001 Dickey Rd, East Chicago, IN. This industrial facility is a large integrated steel mill. Intermediate and final products include sinter, iron, raw steel, cast steel, hot strip, cold rolled strip, hot dip galvanized strip, and chromium and tin plated strip. Outfalls 002, 009, 010, 011, and 012 discharge directly to waters of the State and internal Outfalls 509, 701, 702, 111, and 211 discharge via one of the above outfalls. Outfalls 002, 009, 010 and 011 discharge directly to the Indiana Harbor Ship Canal. Outfall 012 is considered a direct discharge to Lake Michigan.

Variance from Technology Based Effluent Limitations (301(g)) for the West Facility

In March 1986, the owner and operator of the ArcelorMittal Indiana Harbor West facility, LTV Steel applied for and received a "waiver" from the BAT limitations contained in the ironmaking and sintering subcategories of 40 CFR 420. The US EPA granted a variance from the BAT requirements provided for by the federal NPDES permit requirements of the Clean Water Act pursuant to section 301(g). Through its NPDES permit renewal application, ArcelorMittal Indiana Harbor West has requested the PMELs based on the 301(g) variance be continued.
The Indiana Department of Environmental Management, Office of Water Quality, has approved the PMELs for Ammonia (as N) and Phenols (4AAP), because the PMELs will result in compliance with Indiana water quality standards and because all Section 301(g) conditions will be met. Permit Writer: Richard Hamblin, 317/232-8696, Rhamblin@idem.in.gov.

APPEAL PROCEDURES FOR FINAL PERMITS

The Final Permits are available for review & copies at IDEM, Indiana Government Center, North Bldg, 100 N Senate Ave, Indianapolis, IN, Room 1203, Office of Water Quality/NPDES Permit Section, from 9 – 4, M - F (copies 10¢ per page). Copies of the Final Permits are also available at the IDEM Northwest Regional Office, the Lake County Health Department, and on IDEM's website at http://www.in.gov/idem/5338.htm. Please tell others you think would be interested in this matter. Regarding your rights and responsibilities pertaining to the Public Notice process and timeframes, please refer to IDEM websites: http://www.in.gov/idem/5474.htm and IDEM Permit Guide (Public Participation): http://www.in.gov/idem/4172.htm.

Appeal Procedure: Any person affected by the issuance of the Final Permit may appeal by filing a Petition for Administrative Review with the Office of Environmental Adjudication **within** eighteen (18) days of the date of this Public Notice. Any appeal request must be filed in accordance with IC 4-21.5-3-7 and must include facts demonstrating that the party requesting appeal is the applicant; a person aggrieved or adversely affected or is otherwise entitled to review by law.

Timely filing: The Petition for Administrative Review must be received by the Office of Environmental Adjudication (OEA) **within** 18 days of the date of this Public Notice; either by U.S. Mail postmark or by private carrier with dated receipt. This Petition for Administrative Review represents a request for an Adjudicatory Hearing, therefore must:

- state the name and address of the person making the request;
- identify the interest of the person making the request;
- identify any persons represented by the person making the request;
- state specifically the reasons for the request;
- state specifically the issues proposed for consideration at the hearing;
- identify the Final Permit terms and conditions which, in the judgment of the person making the request, would be appropriate to satisfy the requirements of the law governing the NPDES Permit(s).

If the person filing the Petition for Administrative Review desires any part of the NPDES Final Permit(s) to be stayed pending the outcome of the appeal, a Petition for Stay must be included in the appeal request, identifying those parts to be stayed. Both Petitions shall be mailed or delivered to the address here:

Environmental Law Judge
Office of Environmental Adjudication
IGC – North Building- Room 501
100 N. Senate Avenue
Indianapolis, IN 46204
Phone: 317/232-8591.

Stay Time frame: If the Petition (s) is filed **within** eighteen (18) days of the mailing of this Public Notice, the effective date of any part of the permit, within the scope of the Petition for Stay is suspended for fifteen (15) days. The Permit will become effective again upon expiration of the fifteen (15) days, unless or until an Environmental Law Judge stays the permit action in whole or in part.

Hearing Notification: Pursuant to Indiana Code, when a written request is submitted, the OEA will provide the petitioner or any person wanting notification, with the Notice of pre-hearing conferences, preliminary hearings, hearing stays or orders disposing of the Petition for Administrative Review. Petition for Administrative Review must be filed in compliance with the procedures and time frames outlined above. Procedural or scheduling questions should be directed to the OEA at the phone listed above.

National Pollutant Discharge Elimination System
FACT SHEET
for
ArcelorMittal Indiana Harbor, LLC – Indiana Harbor West
October 2011

Indiana Department of Environmental Management

100 North Senate Avenue
Indianapolis, Indiana 46204
(317) 232-8603
Toll Free (800) 451-6027
www.idem.IN.gov

Permittee:	ArcelorMittal Indiana Harbor, LLC – Indiana Harbor West 3001 Dickey Road East Chicago, Indiana 46312
Existing Permit Information:	Permit Number: IN0000205 Administratively Extended Since: 9/29/91
Source Contact:	Wendell Carter (219)391-2834
Source Location:	Indiana Harbor West 3001 Dickey Road East Chicago, Indiana Lake County
Receiving Stream:	Indiana Harbor Ship Canal Indiana Harbor Lake Michigan
Proposed Action:	Renew Permit: IN0000205 Date Application Received: March 29, 2001
Source Category	NPDES Major – Industrial
Permit Writer:	Richard Hamblin (317)232-8696 or rhamblin@idem.in.gov

ED_002857_00000137-00085

Table of Contents

1.0 Introduction **3**
2.0 Facility description **3**
2.1 General 3
2.2 Outfall Locations 4
2.3 Wastewater Treatment 5
2.4 Changes in Operation 12
2.5 Facility Storm Water 13
3.0 Permit History **13**
3.1 Compliance history 13
4.0 Receiving Water **13**
4.1 Receiving Stream Water Quality 13
5.0 Permit limitations **14**
5.1 Existing Permit Limits 14
5.2 Technology-Based Effluent Limits 17
5.3 Water Quality-Based Effluent Limits 17
5.4 Whole Effluent Toxicity 35
5.5 Antibacksliding 35
5.6 Antidegradation 35
5.7 Stormwater 357
5.8 Water Treatment Additives 37
6.0 Permit Draft Discussion **40**
6.1 Discharge Limitations 40
6.2 Monitoring Conditions and Rationale 43
6.3 Schedule of Compliance 47
6.4 Special Conditions 47
6.5 Spill Response and Reporting Requirement 52
6.6 Permit Processing/Public Comment 53

ED_002857_00000137-00086

1.0 INTRODUCTION

The Indiana Department of Environmental Management (IDEM) received a National Pollutant Discharge Elimination System (NPDES) Permit application from ArcelorMittal on March 29, 1991. The current permit was issued on September 30, 1986, and was subsequently modified on June 21, 1990, and September 26, 1991. The permit expired on September 29, 1991. Since the facility filed a timely renewal application, the permit is considered to be administratively extended in accordance with 327 IAC 5-2-6(b). The application was last updated in June 2009. A five year permit is proposed in accordance with 327 IAC 5-2-6(a).

The Federal Water Pollution Control Act of 1972 and subsequent amendments require a NPDES permit for the discharge of wastewater to surface waters. Furthermore, Indiana Statute 13-15-1-2 requires a permit to control or limit the discharge of any contaminants into state waters or into a publicly owned treatment works. This proposed permit action by IDEM complies with both federal and state requirements.

In accordance with Title 40 of the Code of Federal Regulations (CFR) Sections 124.8 and 124.6, as well is Indiana Administrative Code (IAC) 327 Section 5, development of a Fact Sheet is required for NPDES permits. This document fulfills the requirements established in those regulations.

This Fact Sheet was prepared in order to document the factors considered in the development of NPDES Permit effluent limitations. The technical basis for the Fact Sheet may consist of evaluations of promulgated effluent guidelines, existing effluent quality, receiving water conditions, and wasteload allocations to meet Indiana Water Quality Standards. Decisions to award variances to Water Quality Standards or promulgated effluent guidelines are justified in the Fact Sheet where necessary.

2.0 FACILITY DESCRIPTION

2.1 General

ArcelorMittal – Indiana Harbor West is classified under Standard Industrial Classification (SIC) Code 3312 – Steel Mill. The permittee is a large integrated steel mill. Intermediate and final products include sinter, iron, raw steel, cast steel, hot strip, cold rolled strip, hot dip galvanized strip, and chromium and tin plated strip.

ArcelorMittal – Indiana Harbor West (AM West) has requested that Outfall 001 and Internal Outfall 101 be removed from this permit. Discharges associated with these outfalls are now covered under NPDES Permit No. IN0063711. In addition, the facility has identified several changes regarding wastestreams and monitoring points, such as newly constructed wastewater treatment processes. This NPDES permit reflects current operations and flow characterizations at the facility.

A map showing the location of the facility has been included as Figure 1.

ED_002857_00000137-00087

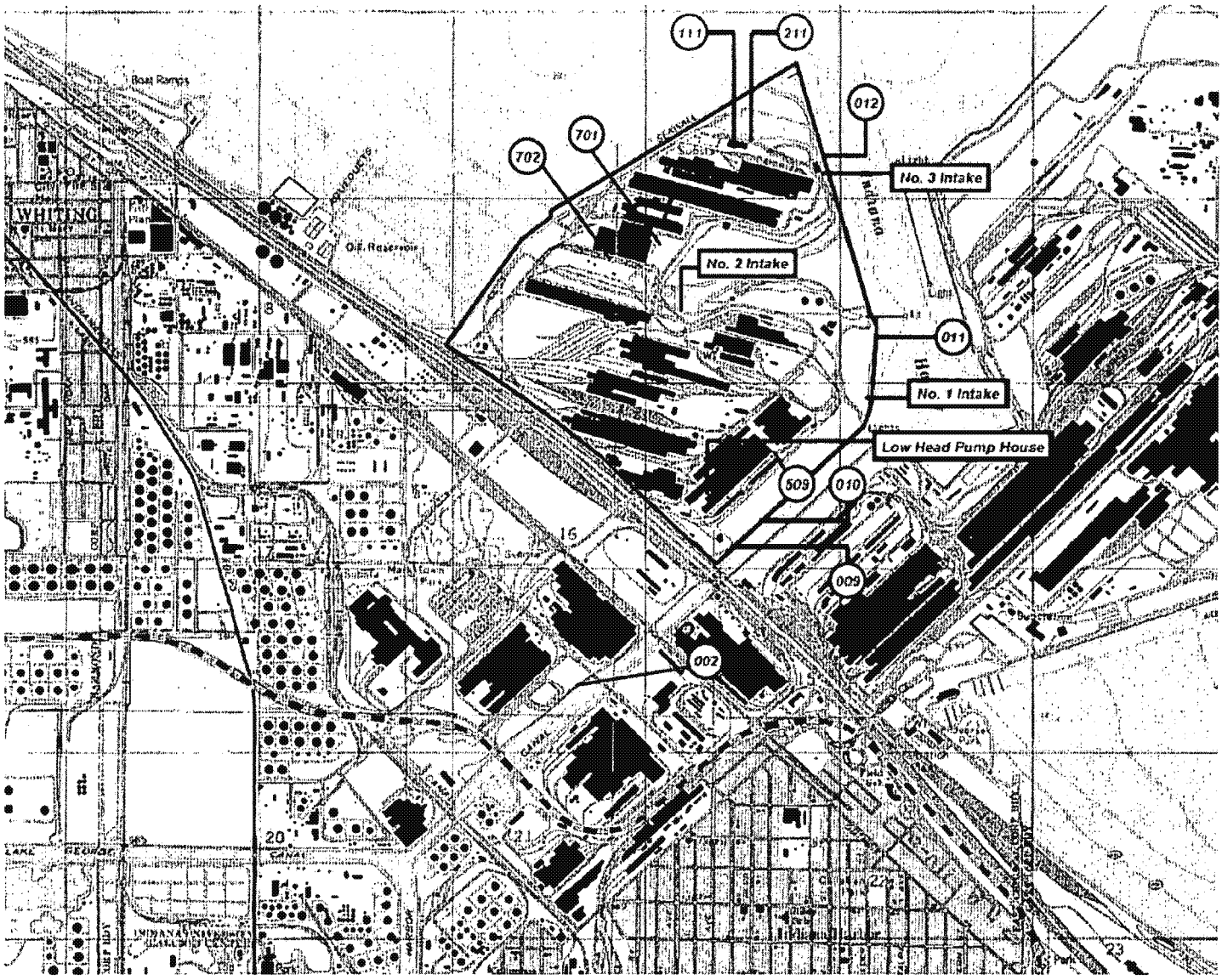

Figure 1: Facility Location

LAKE COUNTY

2.2 Outfall Locations

OUTFALL 002	Latitude:	41° 39' 20"
	Longitude:	87° 21' 35"
OUTFALL 009	Latitude:	41° 39' 40"
	Longitude:	87° 27' 10"
OUTFALL 010	Latitude:	41° 39' 40"
	Longitude:	87° 27' 05"
OUTFALL 011	Latitude:	41° 40' 20"
	Longitude:	87° 26' 35"
OUTFALL 012	Latitude:	41° 40' 52"
	Longitude:	87° 26' 45"

2.3 Wastewater Treatment

ArcelorMittal – Indiana Harbor West (AM West) has requested that the discharge from the Central Treatment Plant (Outfalls 001 and 101) be removed from this permit. Therefore, this permit will not incorporate flows or a wastewater treatment plant classification for the Central Treatment Plant. Please refer to NPDES Permit IN0063711 for information regarding that system.

A flow diagram of the current configuration at the facility has been included as Figure 2.

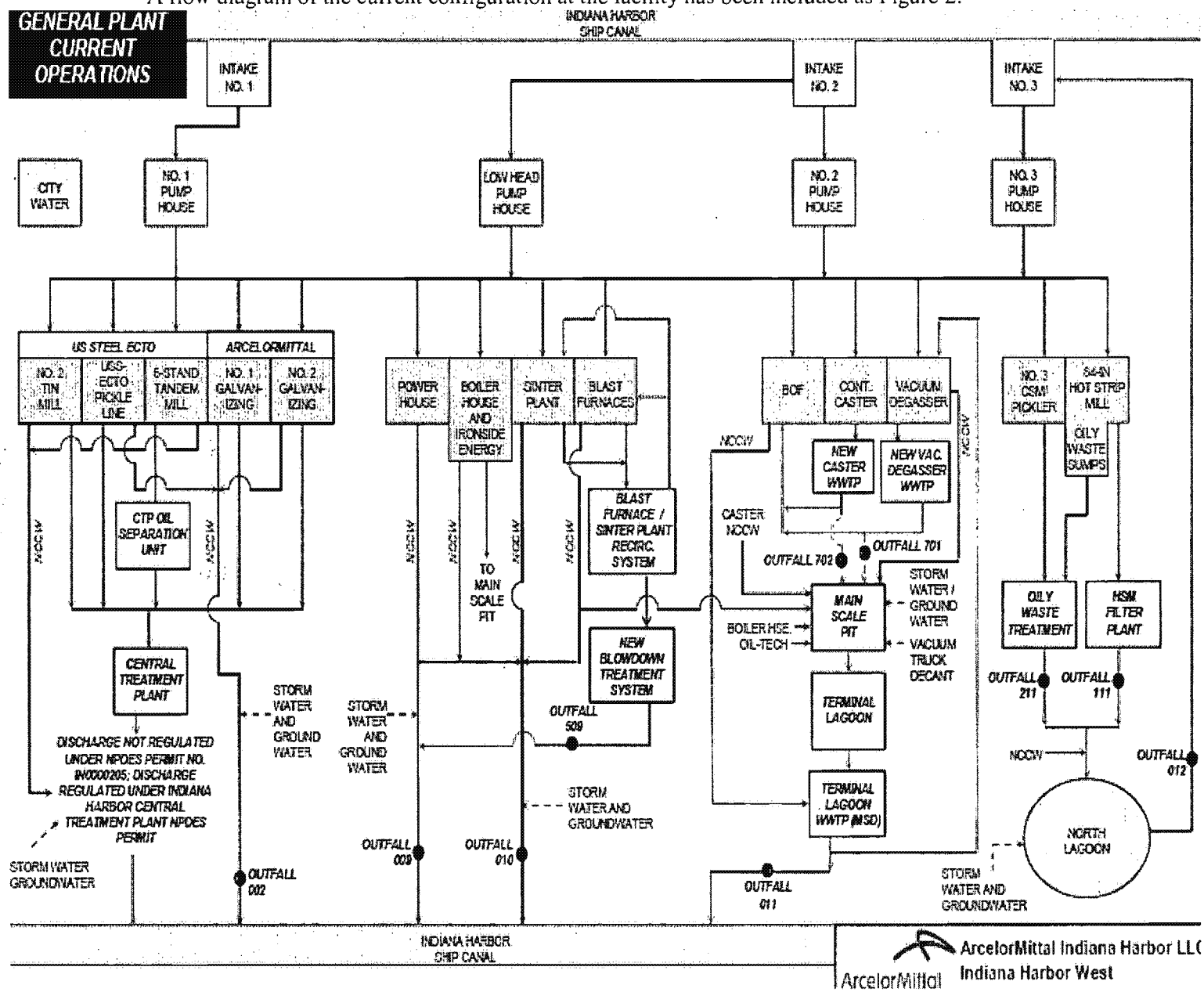

Figure 2: Current Conditions Flow Diagram

Outfall 002 currently consists of storm water, ground water from basement sumps, and non-contact cooling wastewater from the pickling and hot-dip galvanizing lines. The non-contact cooling water is chlorinated and dechlorinated for zebra mussel control prior to discharge. Outfall 002 has an average discharge of approximately 11.2 MGD.

ED_002857_00000137-00089

The facility has proposed changes to Outfall 002 by incorporating a new treatment system for process wastewaters from the galvanizing lines (Internal Outfall 201). However, it was decided that those changes will be made at a later date and addressed in a permit modification. Internal Outfall 201 is not currently covered in this NPDES permit.

A flow diagram showing the current discharges from Outfall 002 is included as Figure 3.

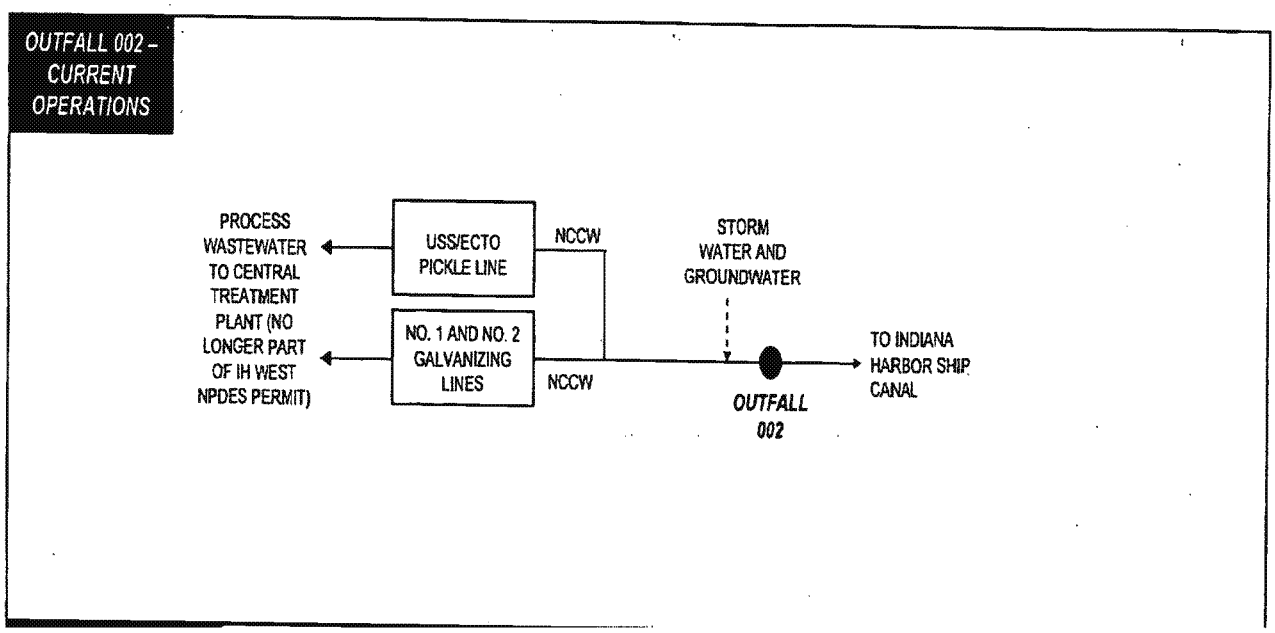

Figure 3:. Current Operations at Outfall 002

Outfalls 003, 004, 005, 006, 007, and 008, storm water outfalls from the previous permit, have been eliminated.

Outfall 009 historically consisted of storm water, ground water from basement sumps, and non-contact cooling wastewater from the powerhouse area. During the previous permit renewal cycle, the facility has incorporated a new treatment system for the blast furnace and sinter plant blowdown that previously discharged via Outfall 011. An internal monitoring point will be included as Internal Outfall 509 to regulate the discharge of the blast furnace and sinter plant blowdown. The non-contact cooling water is chlorinated and dechlorinated for Zebra and Quagga mussel control prior to discharge. The wastewater treatment system is expected to have an average discharge of approximately 1.08 MGD. Outfall 009 has an average discharge of approximately 55.3 MGD.

A flow diagram showing the current discharges from Outfall 009 is included as Figure 4.

ED_002857_00000137-00090

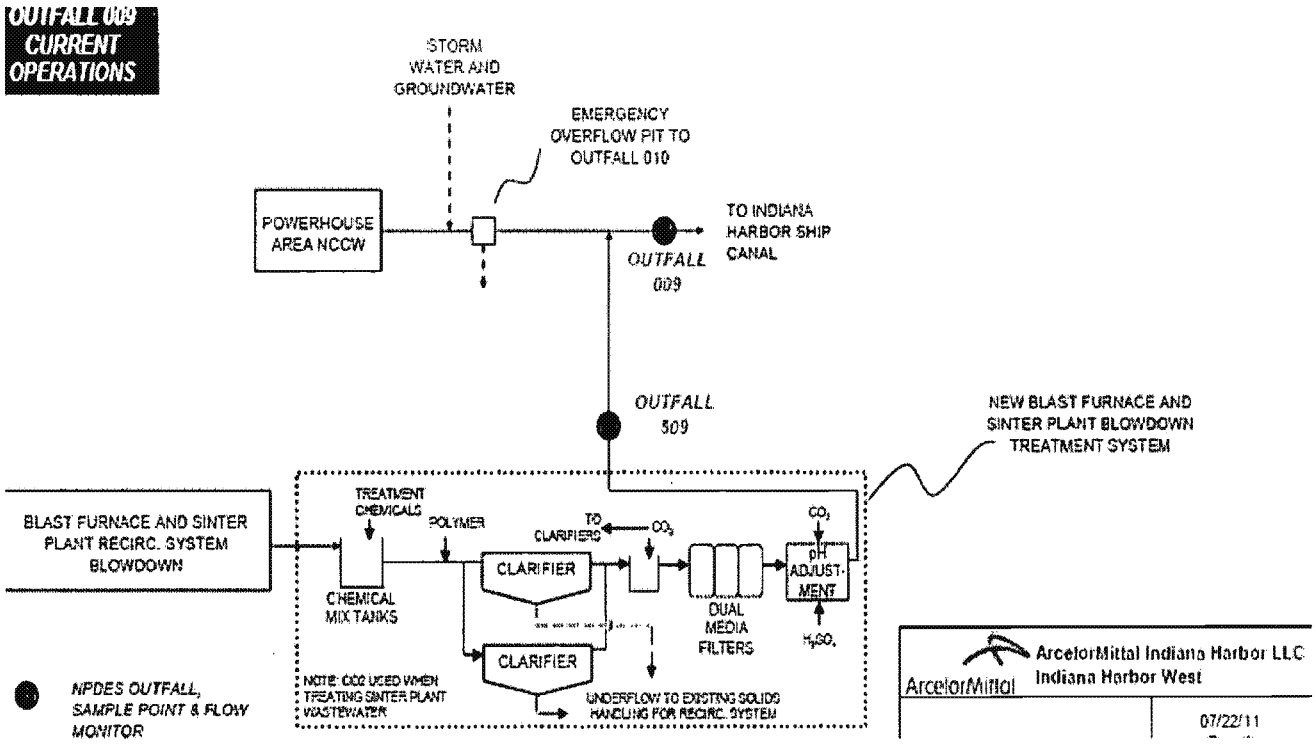

Figure 4: Current Operations at Outfall 009

Outfall 010 currently consists of storm water, ground water from basement sumps, and non-contact cooling wastewater from the blast furnace, sinter plant, powerhouse and boiler house. Outfall 010 also collects overflow from the non-contact cooling water at the sinter plant and powerhouse area. The non-contact cooling water is chlorinated and dechlorinated for zebra mussel control prior to discharge. Outfall 010 has an average discharge of approximately 36.6 MGD. A flow diagram showing discharges from Outfall 010 is included as Figure 5.

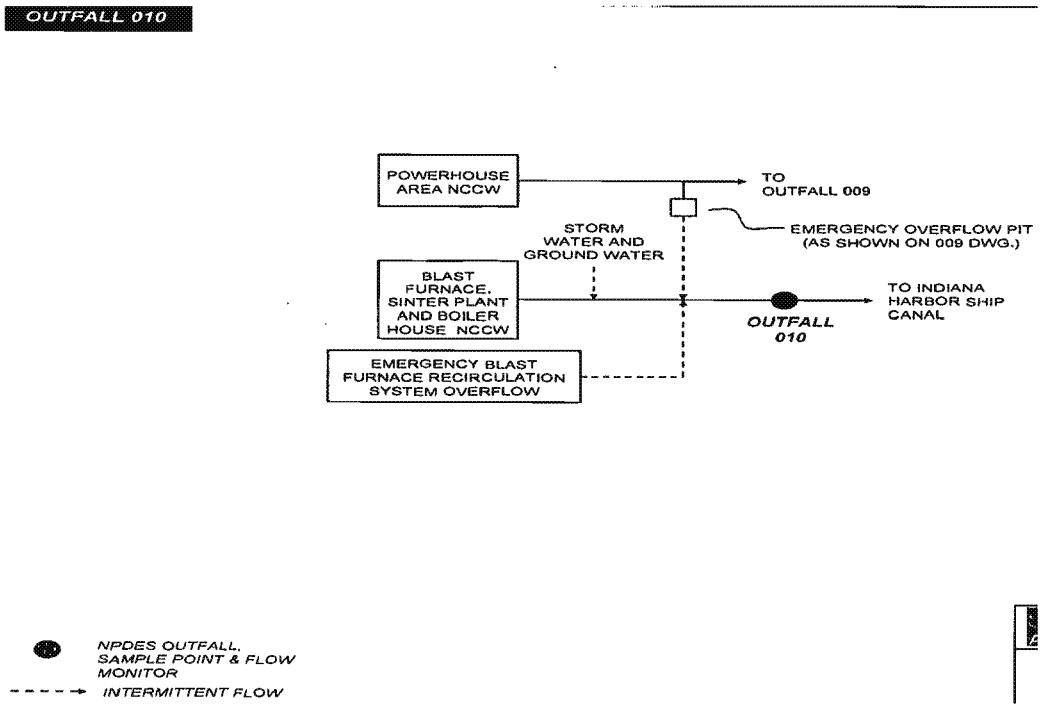

Figure 5: Flow Diagram of Outfall 010

Outfall 011 currently consists of storm water, ground water from basement sumps, vacuum degassing, continuous casting, and on-site oil processing facility process wastewaters, boiler house wastewater, vacuum truck decant as well as non-contact cooling water serving the Basic Oxygen Furnace (BOF), vacuum degasser, and continuous caster. During the previous permit renewal cycle, the facility has incorporated two new treatment systems for the vacuum degasser process wastewater and continuous casting process wastewaters, respectively. Internal monitoring points will be included in this permit to regulate the discharge of the vacuum degasser (Internal Outfall 701) and continuous casting process wastewaters (Internal Outfall 702). Treated wastewater from the above mentioned treatment systems have to potential to be evaporated in the BOF gas cleaning system. As a result, the discharges to waters of the state from Internal Outfalls 701 and 702 are intermittent.

The permittee requested during the application process that another monitoring point be established that included the summation of mass loadings for 701 and 702 because they may be comingled and evaporated in the BOF. Since technology-based effluent limitations are applicable to address the degree of treatability for individual wastestreams, this agency feels that the limits should apply at each categorical wastestream respectively. However, those limitations should only apply when the fate of the discharge is expected to reach the receiving stream. Therefore, monitoring requirements are applicable when the discharge from 701 or 702 are discharged to the main scale pit.

Outfall 011 is expected to have an average discharge of approximately 23.4 MGD. A flow diagram showing the current discharges contributing to Outfall 011 is included as Figure 6.

A flow diagram showing the current discharges contributing to Internal Outfalls 701 and 702 is included as figure 7.

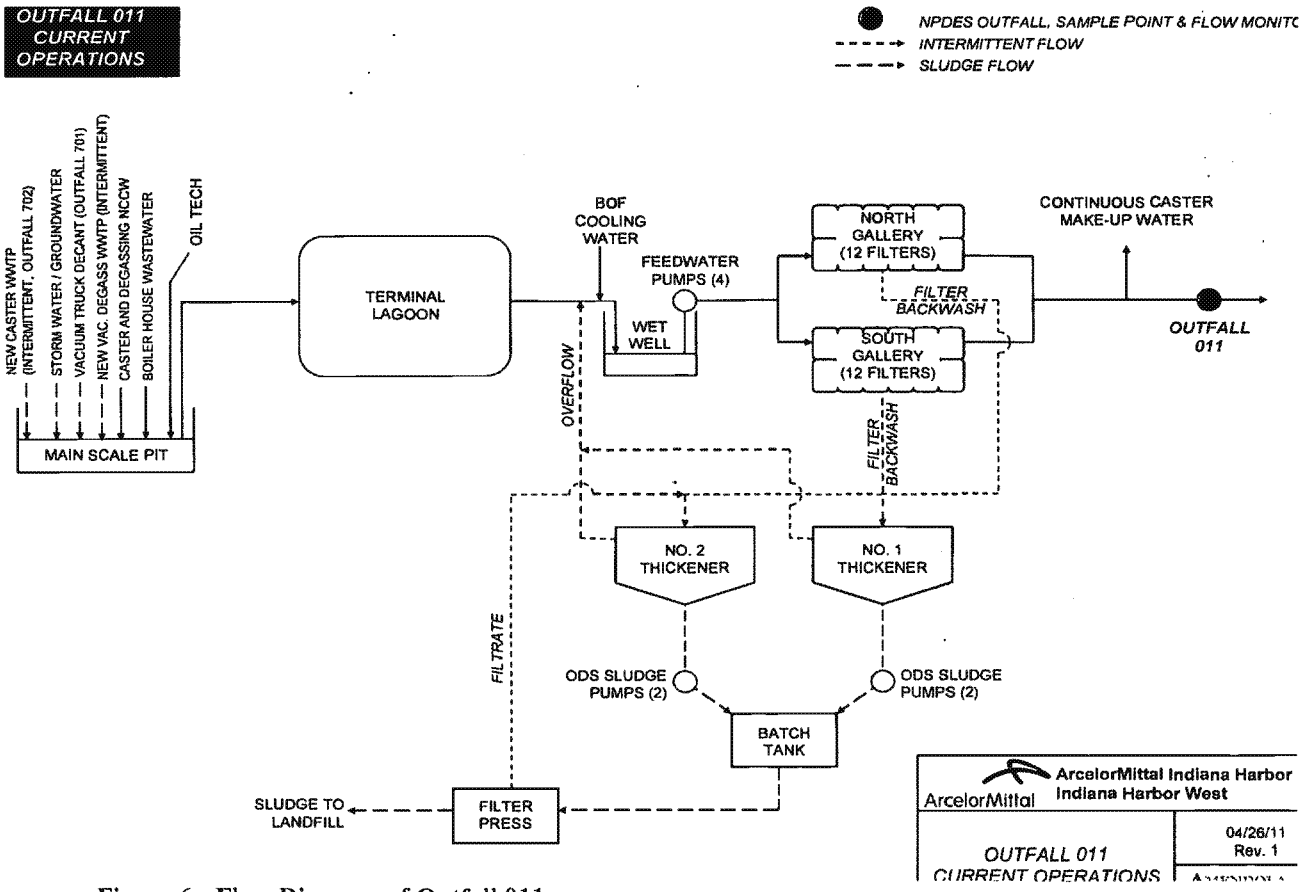

Figure 6: Flow Diagram of Outfall 011

OUTFALLS 701 AND 702 – VACUUM DEGASSING AND CONTINUOUS CASTING

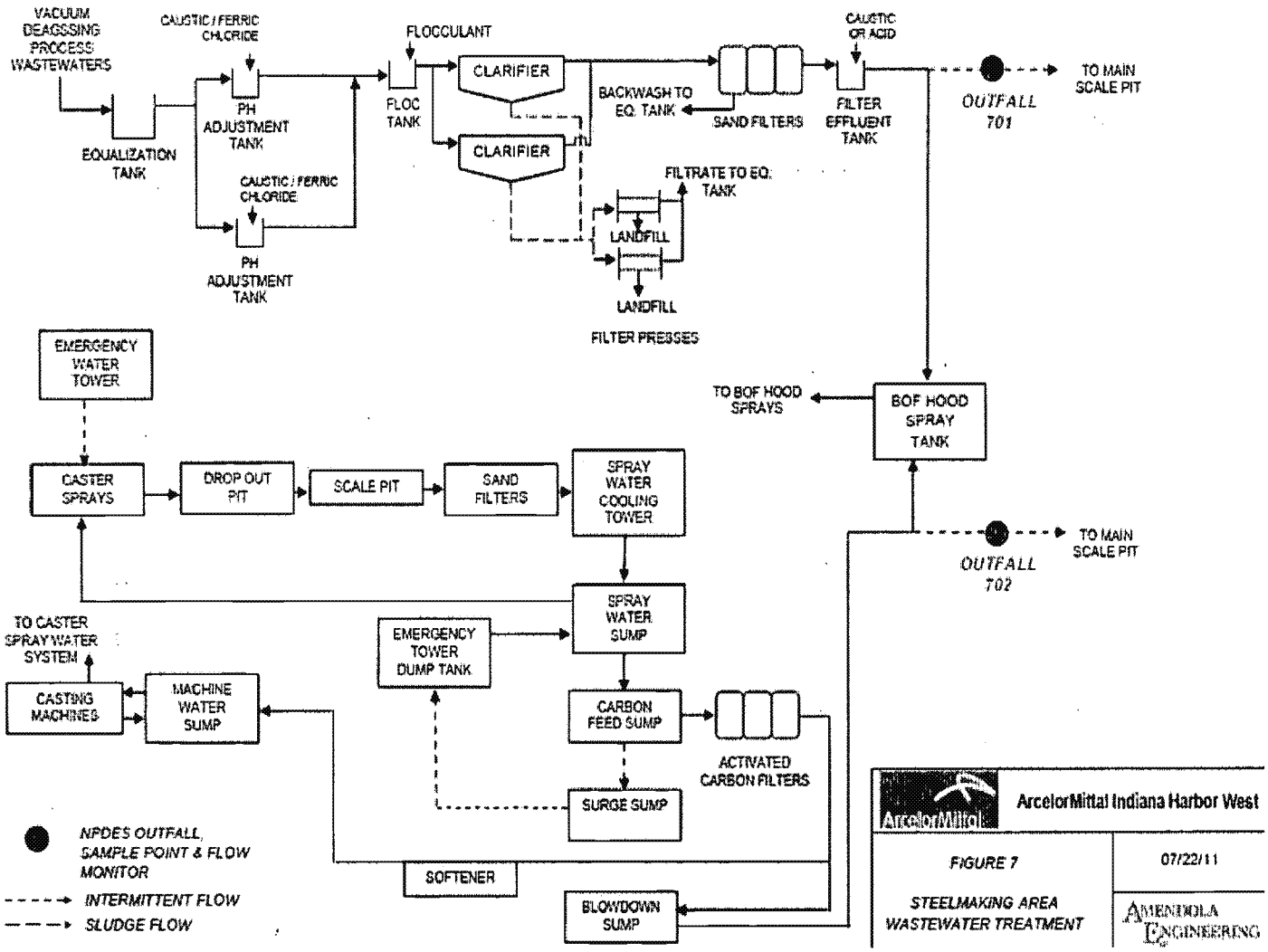

Figure 7: Flow Diagram of Internal Outfalls 701 and 702

Outfall 012 has been incorporated into the permit to monitor discharges of process wastewaters from the Hot Strip Mill Filter Plant (Internal Outfall 111); the Oily Waste Treatment Plant (OWTP) for the Pickling and Cold Rolling operations and Hot Strip Mill oily-waste sumps (Internal Outfall 211); non-contact cooling water; storm water and groundwater to the No. 3 Intake forebay. The Hot Strip Mill Filter Plant and the rolling operations are existing wastestreams. Therefore, Outfall 012 is not considered a new source discharge. Further discussion of the wastewater and treatment for Internal Outfalls 111 and 211 are detailed below.

Outfall 012 has an average discharge of approximately 70 MGD. However, a substantial amount of the discharge from Outfall 012 is recycled through the No. 3 Intake and the No. 3 Cold Mill Complex. The average daily flow from the North Lagoon (Outfall 012) is approximately 34 MGD when the Hot Strip Mill is not operating. A recent dye study, presented in a report dated January 21, 2011, found that all but approximately 10% of the discharge from Outfall 012 is reintegrated into the facility when the Hot Strip Mill is operating. 100% is recycled when the Hot Strip Mill is not operating.

ED_002857_00000137-00093

A flow diagram showing the discharges from Outfall 012 is included as Figure 8.

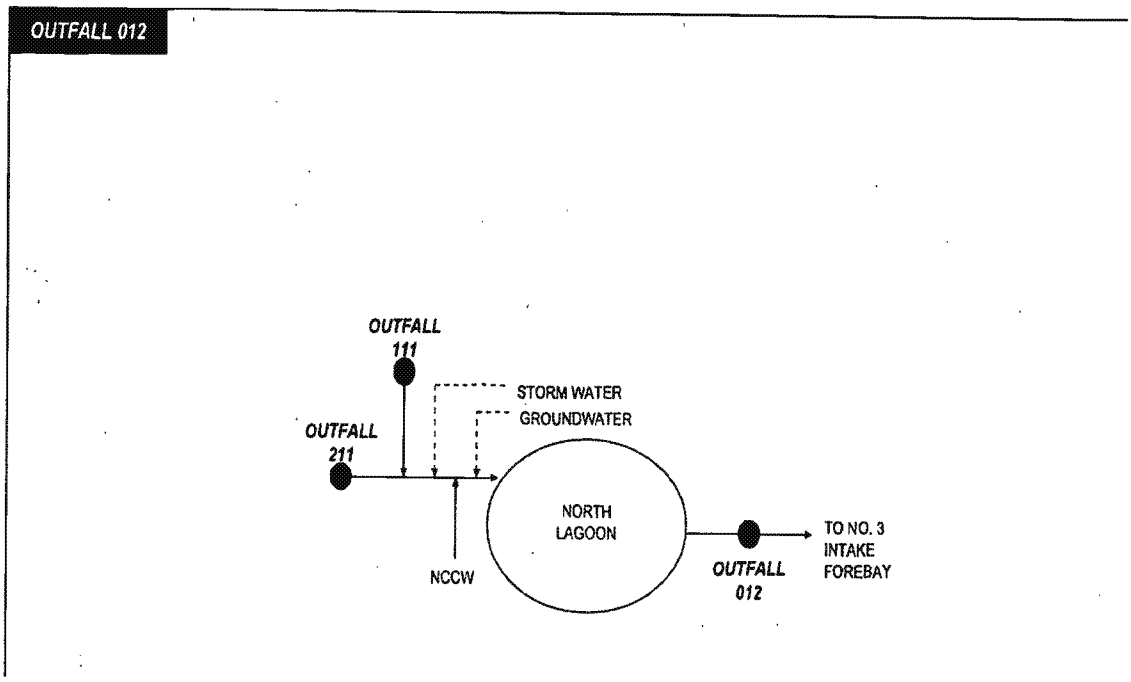

Figure 8: Flow Diagram of Outfall 012

Internal Outfall 111 is the discharge monitoring station for the 84" Hot Strip Mill (HSM) wastewater treatment system. At the HSM, slabs from the continuous caster are heated to rolling temperature by reheat furnaces. As part of the rolling process, high-pressure water is used to remove scale from the reheated slabs and to cool the work rolls. The slabs are reduced in thickness as they are processed through the roughing stands, intermediate rolling stands, and finishing stands. The strip is then coiled and transported to subsequent finishing operations at AM West or sold as "hot bands". Process wastewater from the HSM is treated initially through one of two scale pits.

The No. 1 Scale Pit has three cells and handles wastewater from the furnace run out tables, vertical edger, No. 1 & 2 roughing mills, and the No. 1 descaler. The No. 2 Scale Pit has five cells and handles water from the main mill flumes, delay table, finishing stands, entry and exit descalers at the finishing mill, run out table, and direct contact cooling water from the coilers.

Wastewater from both scale pits is pumped to a filtration plant that consists of 42 large sand filters. The effluent from the filter plant is directed to the North Lagoon via Internal Outfall 111. Filter backwash is directed to a sludge thickener and dewatered. Solids are disposed at an off-site landfill. Overflow from the sludge thickener is directed back to the influent of the filter plant. The filter plant has an average discharge of approximately 38.3 MGD to the North Lagoon.

A flow diagram showing the discharges from Internal Outfall 111 is included as Figure 9.

ED_002857_00000137-00094

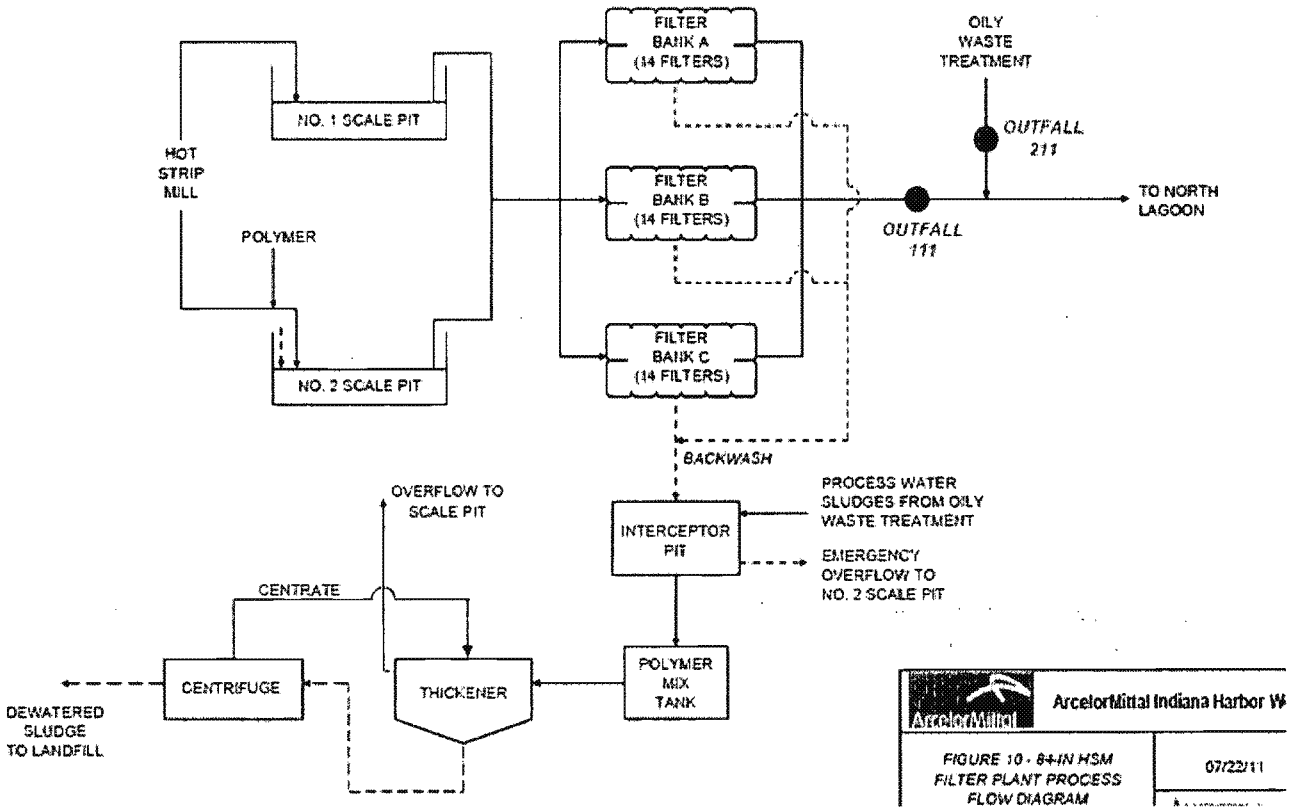

Figure 9: Flow Diagram of Internal Outfall 111

The North Lagoon also accepts wastewater from Internal Outfall 211, non-contact cooling water, storm water, and groundwater from basement sumps before discharging out Outfall 012.

Internal Outfall 211 is the discharge monitoring location for the Oily Wastewater Treatment Plant (OWTP), which serves the No. 3 Cold Mill Complex. The No. 3 Cold Mill Complex includes the No. 3 hydrochloric acid pickling line, the No. 3 five-stand tandem cold reduced sheet mill (CRSM) and the No. 3 direct application temper cold rolling mill. The OWTP is located adjacent to the HSM filter plant. The OWTP consists of a clarifier for gravity separation of free oil and suspended solids, a flash mix tank for aeration of acid rinse water and addition of ferric chloride, caustic neutralization for pH control, a flocculation tank, and two dissolved air flotation (DAF) units for final separation of oil, suspended solids, and metals. The effluent from the DAF units is discharged to the North Lagoon via Internal Outfall 211 and has an average discharge of approximately 2.24 MGD. A flow diagram showing the discharges from Internal Outfall 211 is included as Figure 10.

The permittee requested during the application process that another monitoring point be established that included the summation of mass loadings at Internal Outfalls 111 and 211. Because the wastestreams from each treatment system has the ability to comingle, Internal Outfall 411 is incorporated as the summation of 111 and 211. Please refer to Section 5.2 of this Fact Sheet for more information.

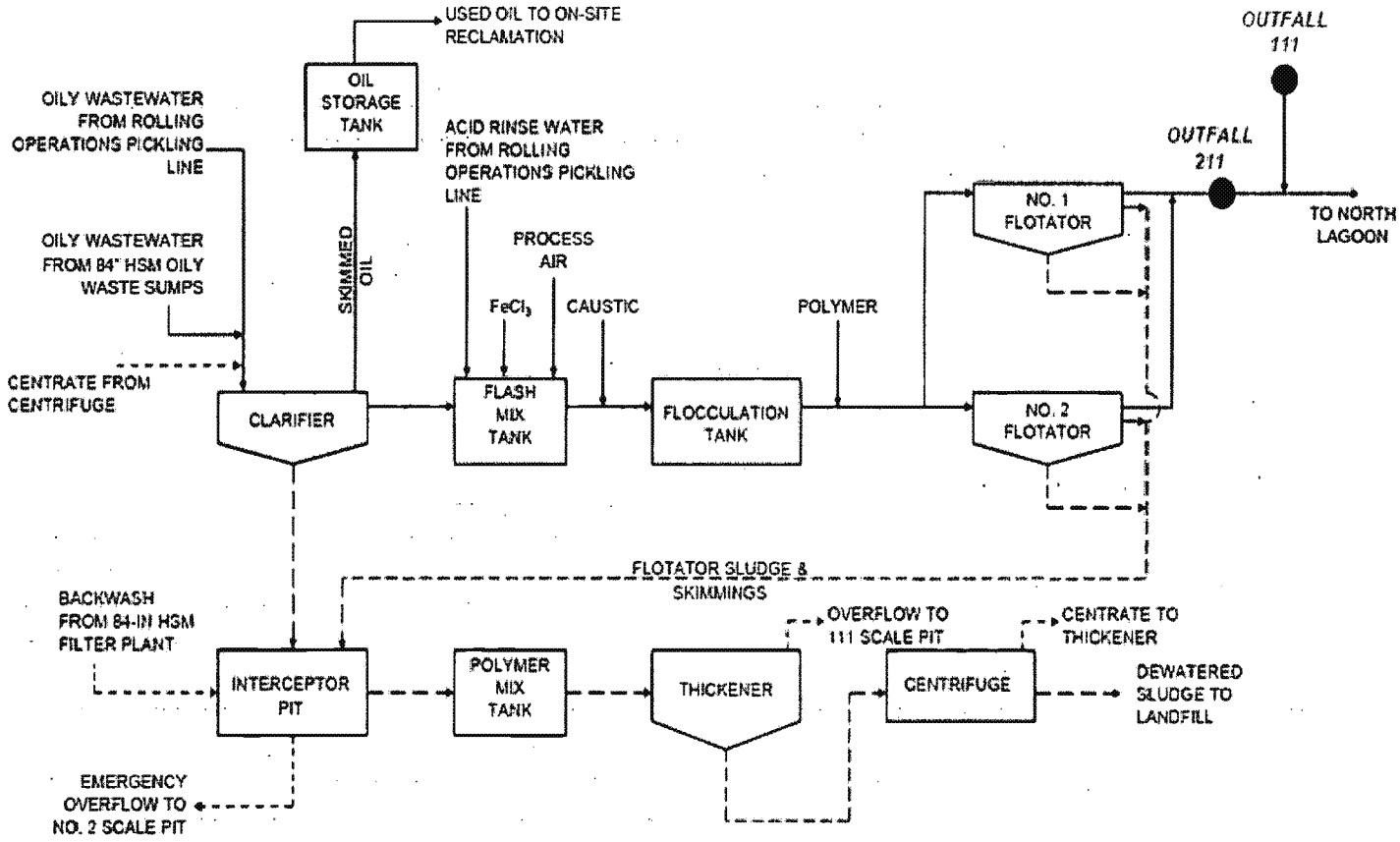

Figure 10: Flow Diagram of Internal Outfall 211

The permittee shall have all the wastewater treatment facilities under the responsible charge of an operator certified by the Commissioner in a classification corresponding to the classification of the wastewater treatment plant as required by IC 13-18-11-11 and 327 IAC 5-22-5. In order to operate a wastewater treatment plant the operator shall have qualifications as established in 327 IAC 5-22-7. The facility has been previously given a Class D industrial wastewater treatment plant classification and will remain a Class D classification.

2.4 Changes in Operation

This NPDES permit contains operations that have been incorporated at the facility since the previous permit cycle. These changes entail the moving of certain wastestreams to different outfalls and the addition of wastewater treatment plants with Internal Outfalls to monitor as such. Below is a summary of the additional wastestreams to each outfall.

- Outfalls 003, 004, 005, 006, 007, and 008 have been eliminated.
- Outfall 009 will include the effluent from a new wastewater treatment plant for the Blast Furnace/Sinter Plant Blowdown (adding Internal Outfall 509) that previously discharged via Outfall 011.
- Outfall 010 will remain unchanged
- Outfall 011 will include two new wastewater treatment facilities for the existing effluents from the vacuum degasser wastestream (adding Internal Outfall 701),

and for the continuous caster wastestream (adding Internal Outfall 702), and redirecting the Blast Furnace/Sinter Plant Blowdown to Outfall 009 via Internal Outfall 509.

- Outfall 012 has been incorporated into the permit to monitor discharges of process wastewaters from the Hot Strip Mill Filter Plant (Internal Outfall 111); the Oily Waste Treatment Plant for the Pickling and Cold Rolling operations and Hot Strip Mill oily-waste sumps (Internal Outfall 211).

2.5 Facility Storm Water

Site storm water is discharged at each outfall without treatment. Storm water monitoring requirements can be found in Section 5.7 of this Fact Sheet.

3.0 PERMIT HISTORY

3.1 Compliance history

A review of the computerized database for tracking permit compliance found effluent violations for zinc [12/07; 1/08; 2/08; 3/08; 11/08] and lead [4/08] at Outfall 011 for the previous three years [12/07-12/10]. There are no current or pending enforcement actions regarding NPDES permits at this facility.

4.0 RECEIVING WATER

The Indiana Harbor Ship Canal originates at the confluence of the East and West Branches of the Grand Calumet River. It runs north for two miles where it is joined by the Lake George Canal. The Indiana Harbor Ship Canal then runs two miles northeast to the Indiana Harbor. The Indiana Harbor runs one mile to the north before emptying into the open waters of Lake Michigan. The receiving streams for this facility are the Indiana Harbor Ship Canal downstream of the Lake George Canal, the Indiana Harbor, and Lake Michigan. The $Q_{7,10}$ low flow value of the Indiana Harbor Ship Canal is 352 cfs and shall be capable of supporting a well balanced, warm water aquatic community and full body contact recreation in accordance with 327 IAC 2-1.5-5.

The permittee discharges to a waterbody that has been identified as a high quality water of the state within the Great Lakes system. The Indiana Harbor Ship Canal is a tributary to the Indiana portion of the open waters of Lake Michigan. The Indiana portion of the open waters of Lake Michigan is designated in 327 IAC 2-1.5-19(b)(2) as an Outstanding State Resource Water (OSRW). Discharges to tributaries of OSRWs are subject to the antidegradation implementation procedure for OSRWs in 327 IAC 5-2-11.7(a)(2).

In addition to OSRW antidegradation implementation procedures, the Indiana Harbor Ship Canal is subject to other NPDES requirements specific to Great Lakes system dischargers under 327 IAC 2-1.5 and 327 IAC 5-2-11.2 through 327 IAC 5-2-11.6. These rules address water quality standards applicable to dischargers within the Great Lakes system and reasonable potential to exceed water quality standards procedures.

As required by 327 IAC 5-2-11.3(b)(2), language in this renewed permit specifically prohibits the permittee from undertaking deliberate actions that would result in new or increased discharges of BCC's or new or increased permit limits for non-BCC's, or from allowing a new or increased discharge of a BCC from an existing or proposed industrial user, without first proving that the new or increased discharge would not result in a significant lowering of water quality, or by submission and approval of an antidegradation demonstration to the IDEM.

ED_002857_00000137-00097

4.1 Receiving Stream Water Quality

The Indiana Harbor and Ship Canal is listed on Indiana's 2010 303(d) List of Impaired Waters for *E. coli*, oil and grease, impaired biotic communities, and PCB's in fish tissue. The Lake Michigan shoreline east and west of the Indiana Harbor Canal is listed for mercury and PCB's in fish tissue. A TMDL report has not been completed for the Indiana Harbor Ship Canal.

5.0 PERMIT LIMITATIONS

Two categories of effluent limitations exist for NPDES permits: 1) Technology based effluent limits, and 2) Water quality based effluent limits.

Technology based effluent limits are developed by applying the national effluent limitation guidelines (ELGs) established by EPA for specific industrial categories. Technology based effluent limits were established to require a minimum level of treatment for industrial or municipal sources using available technology. In the absence of federally promulgated guidelines effluent limits can also be based upon BPJ. Technology based limits are the primary mechanism of control and enforcement of water pollution under the CWA. Technology based treatment requirements under section 301(b) of the CWA represent the minimum level of control that must be imposed in a section 402 permit [40 CFR 125.3(a)]. Accordingly, every individual member of a discharge class or category is required to operate their water pollution control technologies according to industry-wide standards and accepted engineering practices. This means that technology-based effluent limits based upon a BPJ determination are applied at end-of-pipe and mixing zones are not allowed [40 CFR 125.3(a)]. Similarly, since the statutory deadlines for BPT, BAT and BCT have all passed, compliance schedules are also not allowed.

Water quality based effluent limits are designed to be protective of the beneficial uses of the receiving water and are independent of the available treatment technology. The need for WQBELs is determined by application of the reasonable potential procedures contained in 327 IAC 5-2-11.5. WQBELs are developed using the water quality criteria in 327 IAC 2-1.5, the wasteload allocation procedures in 327 IAC 5-2-11.4 and the procedures for converting wasteload allocations into WQBELs in 327 IAC 5-2-11.6. In addition to numeric WQBELs, the narrative water quality criteria contained in 327 IAC 2-1.5-8 have been included in this permit to ensure that the narrative water quality criteria are met.

According to 40 CFR 122.44 and 327 IAC 5, NPDES permit limits are based on either technology-based limitations, where applicable, best professional judgment (BPJ), or Indiana Water Quality-Based Effluent Limitations, whichever is most stringent.

5.1 Existing Permit Limits

Outfall 002

Parameter	Monthly Average	Daily Maximum	Units
Flow	Report	Report	MGD
Oil and Grease	Report	Report	mg/l
Total Suspended Solids	Report	Report	lbs/day & mg/l
Total Residual Oxidants	Report	0.05	mg/l
Total Residual Chlorine	0.02	0.04	mg/l

Parameter	Daily Minimum	Daily Maximum	Units
pH	6.0	9.0	Std Units

ED_002857_00000137-00098

Outfalls 003, 004, and 005

Parameter	Monthly Average	Daily Maximum	Units
Flow	Report	Report	MGD
Oil and Grease	Report	Report	lbs/day & mg/l
Total Suspended Solids	Report	Report	lbs/day & mg/l
Tin	Report	Report	lbs/day & mg/l
Ammonia, as N	Report	Report	lbs/day & mg/l
Cyanide	Report	Report	lbs/day & mg/l
Phenols (4AAP)	Report	Report	lbs/day & mg/l
Lead	Report	Report	lbs/day & mg/l
Zinc	Report	Report	lbs/day & mg/l

Parameter	Daily Minimum	Daily Maximum	Units
pH	Report	Report	Std Units

Outfall 008

Parameter	Monthly Average	Daily Maximum	Units
Flow	Report	Report	MGD
Oil and Grease	Report	Report	lbs/day & mg/l
Total Suspended Solids	Report	Report	lbs/day & mg/l
Ammonia, as N	Report	Report	lbs/day & mg/l
Cyanide	Report	Report	lbs/day & mg/l
Phenols (4AAP)	Report	Report	lbs/day & mg/l
Benzene	Report	Report	lbs/day & mg/l
Naphthalene	Report	Report	lbs/day & mg/l
Benzo(a)pyrene	Report	Report	lbs/day & mg/l

Parameter	Daily Minimum	Daily Maximum	Units
pH	Report	Report	Std Units

Outfall 009

Parameter	Monthly Average	Daily Maximum	Units
Flow	Report	Report	MGD
Oil and Grease	Report	Report	mg/l
Total Suspended Solids	Report	Report	lbs/day & mg/l
Total Residual Oxidants	Report	0.05	mg/l
Total Residual Chlorine	0.02	0.04	mg/l
Ammonia, as N	84	236	lbs/day
Phenols (4AAP)	Report	4.4	lbs/day
Cyanide	Report	Report	lbs/day & mg/l
Chlorides	Report	Report	mg/l
Sulfates	Report	Report	mg/l
Fluorides	Report	Report	mg/l
Iron	Report	Report	mg/l

Parameter	Daily Minimum	Daily Maximum	Units
pH	6.0	9.0	Std Units

ED_002857_00000137-00099

Outfall 010

Parameter	Monthly Average	Daily Maximum	Units
Flow	Report	Report	MGD
Oil and Grease	Report	Report	mg/l
Total Suspended Solids	Report	Report	lbs/day & mg/l
Total Residual Oxidants	Report	0.05	mg/l
Total Residual Chlorine	0.02	0.04	mg/l
Ammonia, as N	180	402	lbs/day
Phenols (4AAP)	Report	6.6	lbs/day
Cyanide	Report	Report	lbs/day & mg/l
Chlorides	Report	Report	mg/l
Sulfates	Report	Report	mg/l
Fluorides	Report	Report	mg/l
Iron	Report	Report	mg/l

Parameter	Daily Minimum	Daily Maximum	Units
pH	6.0	9.0	Std Units

Outfall 011

Parameter	Monthly Average	Daily Maximum	Units
Flow	Report	Report	MGD
Oil and Grease	Report	1,500	lbs/day
Total Suspended Solids	3,425	9,111	lbs/day
Total Residual Oxidants	Report	0.05	mg/l
Total Residual Chlorine	0.02	0.04	mg/l
Ammonia, as N	336	812	lbs/day
Phenols (4AAP)	Report	10.0	lbs/day
Cyanide	31.38	62.70	lbs/day & mg/l
Lead	10.19	30.58	lbs/day
Zinc	24.7	62.0	lbs/day
Chlorides	Report	Report	mg/l
Sulfates	Report	Report	mg/l
Fluorides	Report	Report	mg/l
Iron	Report	Report	mg/l

Parameter	Daily Minimum	Daily Maximum	Units
pH	6.0	9.0	Std Units

Internal Outfalls 111 and 211

Parameter	Monthly Average	Daily Maximum	Units
Flow	Report	Report	MGD
Oil and Grease	Report	5,344	lbs/day
Total Suspended Solids	5,663	14,576	lbs/day
Lead	5.28	15.83	lbs/day
Zinc	5.25	15.70	lbs/day
Iron	Report	Report	lbs/day & mg/l

Parameter	Daily Minimum	Daily Maximum	Units
pH	6.0	9.0	Std Units

ED_002857_00000137-00100

5.2 Technology-Based Effluent Limits

The applicable technology based standards for the wastestreams contributing to the discharges from AM West are contained in 40 CFR 420 – Iron and Steel Manufacturing Point Source Category. Technology-Based Effluent limits apply at end-of-process and apply at internal monitoring points. The following table identifies the applicable standards.

Applicable ELG Subparts

Subpart	Description
40 CFR 420.20 Subpart B – Sintering Subcategory	Discharges from sintering operations by the heating of iron bearing wastes together with fine iron ore, limestone, and coke fines in an ignition furnace to produce an agglomerate
40 CFR 420.30 Subpart C – Ironmaking Subcategory	Discharges from ironmaking operations in which iron ore is molten in a blast furnace
40 CFR 420.50 Subpart E – Vacuum Degassing Subcategory	Discharges from vacuum degassing operations conducted by applying a vacuum to molten steel
40 CFR 420.60 Subpart F – Continuous Casting Subcategory	Discharges from the continuous casting of molten steel into intermediate or semi-finished steel products through water cooled molds
40 CFR 420.70 Subpart G – Hot Forming Subcategory	Discharges from hot forming operations in primary, section, flat, and pipe and tube mills
40 CFR 420.90 Subpart I – Acid Pickling Subcategory	Discharges from sulfuric acid, hydrochloric acid, or combination acid pickling operations
40 CFR 420.100 Subpart J – Cold Forming Subcategory	Discharges from cold rolling in which unheated steel is passed through rolls or otherwise processed
40 CFR 420.120 Subpart L – Hot Coating Subcategory	Discharges from operations in which steel is coated by the hot dip process

The following tables contain the applicable ELGs from the federal regulations identified above and the calculated permit limits for each outfall as the facility is currently configured in regards to wastestream discharge points.

Outfall 002

Outfall 002 contains storm water, ground water from basement sumps, and non-contact cooling wastewater from the pickling and hot-dip galvanizing lines. No applicable categorical limits apply.

Outfall 009

Outfall 009 contains storm water, ground water from basement sumps, and non-contact cooling wastewater from the powerhouse area. No applicable categorical limits apply. However, the facility has incorporated a new treatment system for the blast furnace and sinter plant blowdown. Categorical limits will apply at Internal Outfall 509.

ED_002857_00000137-00101

Internal Outfall 509

Internal Outfall 509 will consist of the effluent from a wastewater treatment plant for the blast furnace and sinter plant process wastewaters (40 CFR 420.20 and 40 CFR 420.30) prior to discharging via Outfall 009.

Typically, TBELs are established for the discharge from each individual wastestream. However, many steel mills have wastewater treatment facilities designed to treat any combination of wastewaters. The TBELs for Internal Outfall 509 are established by adding all applicable pollutant loads for each wastestream, by parameter, contained in 40 CFR Part 420.20 and 420.30.

Total Suspended Solids					
40 CFR	**Production**	**Monthly Average**		**Daily Maximum**	
		Categorical Limitation	**Subtotal (lbs/day)**	**Categorical Limitation**	**Subtotal (lbs/day)**
420.22 (BPT)	3,800 Tons/Day	0.0250 lbs/1000lbs	190[1]	0.0751 lbs/1000lbs	571
420.23 (BAT)		-------	---------	--------	--------
420.32(a) (BPT)	10,500 Tons/Day	0.0260 lbs/1000lbs	546	0.0782 lbs/1000lbs	1,642
420.33(a) (BAT)		-------	---------	--------	--------
Total TSS Limitation		736 lbs/day		2,213 lbs/day	

[1] Below is an example TSS calculation for Sintering Subcategory; Operations with Wet Air Pollution Control System:

$$\text{TSS Average Monthly Limit} = 3{,}800\frac{tons}{day} \times 2000\frac{lb}{ton} \times 0.0250\frac{lb}{1000lb} = 190\frac{lb}{day}$$

Oil and Grease					
40 CFR	**Production**	**Monthly Average**		**Daily Maximum**	
		Categorical Limitation	**Subtotal (lbs/day)**	**Categorical Limitation**	**Subtotal (lbs/day)**
420.22 (BPT)	3,800 Tons/Day	0.00501 lbs/1000lbs	38.1	0.0150 lbs/1000lbs	114
420.23 (BAT)		-------	---------	--------	--------
420.32(a) (BPT)	10,500 Tons/Day	PARAMETER NOT IDENTIFIED IN THIS CATEGORY			
420.33(a) (BAT)					
Total O+G Limitation		38.1 lbs/day		114 lbs/day	

ED_002857_00000137-00102

Lead					
40 CFR	Production	Monthly Average		Daily Maximum	
		Categorical Limitation	Subtotal (lbs/day)	Categorical Limitation	Subtotal (lbs/day)
420.22 (BPT)	3,800 Tons/Day	----------	---------	---------	--------
420.23 (BAT)		0.000150 lbs/1000lbs	1.14	0.000451 lbs/1000lbs	3.43
420.32(a) (BPT)	10,500 Tons/Day	----------	---------	---------	--------
420.33(a) (BAT)		0.0000876 lbs/1000lbs	1.84	0.000263 lbs/1000lbs	5.52
Total Lead Limitation		2.98 lbs/day		8.95 lbs/day	

Zinc					
40 CFR	Production	Monthly Average		Daily Maximum	
		Categorical Limitation	Subtotal (lbs/day)	Categorical Limitation	Subtotal (lbs/day)
420.22 (BPT)	3,800 Tons/Day	----------	---------	---------	--------
420.23 (BAT)		0.000225 lbs/1000lbs	1.71	0.000676 lbs/1000lbs	5.14
420.32(a) (BPT)	10,500 Tons/Day	----------	---------	---------	--------
420.33(a) (BAT)		0.000131 lbs/1000lbs	2.75	0.000394 lbs/1000lbs	8.27
Total Zinc Limitation		4.46 lbs/day		13.4 lbs/day	

Total Cyanide					
40 CFR	Production	Monthly Average		Daily Maximum	
		Categorical Limitation	Subtotal (lbs/day)	Categorical Limitation	Subtotal (lbs/day)
420.22 (BPT)	3,800 Tons/Day	----------	---------	---------	--------
420.23 (BAT)		0.00150 lbs/1000lbs	11.4	0.00300 lbs/1000lbs	22.8
420.32(a) (BPT)	10,500 Tons/Day	0.00782 lbs/1000lbs	164	0.0234 lbs/1000lbs	491
420.33(a) (BAT)		0.000876 lbs/1000lbs	18.4	0.00175 lbs/1000lbs	36.8
Total Cyanide Limitation		29.8 lbs/day		59.6 lbs/day	

Ammonia, as N					
40 CFR	Production	Monthly Average		Daily Maximum	
		Categorical Limitation	Subtotal (lbs/day)	Categorical Limitation	Subtotal (lbs/day)
420.22 (BPT)	3,800 Tons/Day	----------	---------	---------	--------
420.23 (BAT)		0.00501 lbs/1000lbs	38.1	0.0150 lbs/1000lbs	114
420.32(a) (BPT)	10,500 Tons/Day	0.0537 lbs/1000lbs	1,128	0.161 lbs/1000lbs	3,478
420.33(a) (BAT)		0.00292 lbs/1000lbs	61.3	0.00876 lbs/1000lbs	184
Total Ammonia, as N Limitation		99.4 lbs/day		298 lbs/day	

ED_002857_00000137-00103

2,3,7,8-Tetrachlorodibenzofuran					
40 CFR	Production	Monthly Average		Daily Maximum	
		Categorical Limitation	Subtotal (pg/l)	Categorical Limitation	Subtotal (pg/l)
420.22 (BPT)	3,800 Tons/Day	----------	---------	---------	--------
420.23 (BAT)		----------	---------	<ML	<10[1]
420.32(a) (BPT)	10,500 Tons/Day	PARAMETER NOT IDENTIFIED IN THIS CATEGORY			
420.33(a) (BAT)					
Total 2,3,7,8-TCDF Limitation		----------		<10 pg/l	

[1] The limitation and standard for 2,3,7,8 – tetrachlorodibenzofuran (2,3,7,8 – TCDF) is expressed as less than the Minimum Level ("<ML"). The term Minimum Level (ML) means the level at which the analytical system gives recognizable signals and an acceptable calibration point. For 2,3,7,8 – TCDF, the minimum level is 10 pg/l per EPA Method 1613B for water and wastewater samples. The term pg/L means picograms per liter (ppt = 1.0×10^{-12} gram/L).

Total Residual Chlorine					
40 CFR	Production	Monthly Average		Daily Maximum	
		Categorical Limitation	Subtotal (lbs/day)	Categorical Limitation	Subtotal (lbs/day)
420.22 (BPT)	3,800 Tons/Day	FACILITY DOES NOT CHLORINATE SINTERING PROCESS WASTEWATER. THEREFORE, TRC LIMITATIONS ARE NOT APPLICABLE FROM THIS CATEGORY			
420.23 (BAT)					
420.32(a) (BPT)	10,500 Tons/Day	FACILITY DOES NOT CHLORINATE IRONMAKING WASTEWATER. THEREFORE, TRC LIMITATIONS ARE NOT APPLICABLE FROM THIS CATEGORY			
420.33(a) (BAT)					
Total Residual Chlorine Limitation		NOT APPLICABLE		NOT APPLICABLE	

Phenols (4AAP)					
40 CFR	Production	Monthly Average		Daily Maximum	
		Categorical Limitation	Subtotal (lbs/day)	Categorical Limitation	Subtotal (lbs/day)
420.22 (BPT)	3,800 Tons/Day	----------	---------	---------	--------
420.23 (BAT)		0.0000501 lbs/1000lbs	0.381	0.000100 lbs/1000lbs	0.760
420.32(a) (BPT)	10,500 Tons/Day	0.00210 lbs/1000lbs	44.1	0.00626 lbs/1000lbs	131
420.33(a) (BAT)		0.0000292 lbs/1000lbs	0.613	0.0000584 lbs/1000lbs	1.23
Total Phenols (4AAP) Limitation		0.994 lbs/day		1.99 lbs/day	

The categorical limitations included at Internal Outfall 509 are:

- TSS, O+G, Lead, Zinc, and Total Cyanide

  The above mentioned parameters have TBELs that are more stringent than the Water Quality-Based Effluent Limitations (WQBELs). Therefore, the TBELs for monthly average and daily maximums, identified in the tables above, are included at Internal Outfall 509.

- 2,3,7,8-TCDF

40 CFR 420.23(a) contains a BAT effluent limitation guideline for 2,3,7,8-tetrachlorodibenzofuran (2,3,7,8-TCDF), which is a toxic pollutant associated with sinter plant process wastewaters. 40 CFR 420.29(a) requires that compliance with 2,3,7,8-TCDF effluent limitations contained in the NPDES permit effluent limitations be determined at the discharge from the sinter plant wastewater treatment; or, if sinter plant and blast furnace wastewaters are combined for treatment, at the effluent of the combined wastewater treatment system prior to mixing with more than 5% by volume of other process or non-process wastewaters. Therefore, the technology based effluent limitation for 2,3,7,8-TCDF will be applied at internal monitoring location 509; the discharge of process wastewater from the sintering operations.

- Ammonia-N and Phenols

Section 301(g) of the Clean Water Act provides variances to BAT limitations. The facility has a previously approved 301(g) variance for ammonia and phenols. That variance approved net limitations for ammonia and phenols for Outfalls 009, 010, and 011. The facility has submitted a request for a continuance of the 301(g) variance for ammonia and phenols (4AAP). This request proposes a gross ammonia-N limitation of 600 lbs/day monthly average and 1,450 lbs/day daily maximum and a phenol daily maximum limitation of 21 lbs/day at Internal Outfall 509. IDEM has reviewed the submittal from ArcelorMittal and, as a result of that review, determined that the net limit requirements for the three outfalls shall remain in the permit. The variance will assign specific net limits for ammonia (as N) and phenols (4AAP) as before but since the sinter plant and blast furnace systems were removed from the Outfall 011 discharge and redirected to Outfall 009, the ammonia and phenol allocations have been rearranged but the total net limits will still apply across the three outfalls as before.

Outfall 010

Outfall 010 consists of storm water, ground water from basement sumps, and non-contact cooling wastewater from the blast furnace, sinter plant, powerhouse and boiler house. Outfall 010 also collects overflow from Outfall 009 and from the blast furnace recirculation system in the event of an emergency. Categorical limits will apply at Internal Outfall 509.

Outfall 011

Outfall 011 previously consisted of sinter plant (40 CFR 420.20), blast furnace (40 CFR 420.30), vacuum degassing (40 CFR 420.50), and continuous casting (40 CFR 420.60) process wastewaters. However, the facility directed the sinter plant and blast furnace wastewaters to Outfall 009 via Internal Outfall 509 and has incorporated two new treatment systems for the vacuum degasser and continuous casting process wastewaters, respectively. Internal Outfall 701 will be included to regulate the vacuum degasser operations (40 CFR 420.50) while Internal Outfall 702 will be included to regulate the continuous casting operations (40 CFR 420.60).

Internal Outfall 701

The new treatment system for the vacuum degasser process wastewater is incorporated into this NPDES permit. Internal monitoring point 701 will be included to regulate the discharge with categorical effluent limits for the vacuum degasser operations (40 CFR 420.50). As indicated in the previous permit, New Source Performance Standards (NSPS) are included for the vacuum degassing and are more stringent than the BAT/BPT limitations.

ED_002857_00000137-00105

The facility has indicated that it is feasible to direct the treated effluent from the vacuum degasser treatment system to the BOF and evaporated. Therefore, TBELs at Internal Outfall 701 will only apply when wastewater from 701 is expected to be discharged to the receiving stream. Flow at Internal Outfall 701 will be monitored regardless of the wastestream's fate.

Total Suspended Solids					
40 CFR	Production	Monthly Average		Daily Maximum	
		Categorical Limitation	Subtotal (lbs/day)	Categorical Limitation	Subtotal (lbs/day)
420.54 (NSPS)	4,069.1 Tons/Day	0.00261 lbs/1000lbs	21.2	0.00730 lbs/1000lbs	59.4
Total TSS Limitation		21.2 lbs/day		59.4 lbs/day	

Lead					
40 CFR	Production	Monthly Average		Daily Maximum	
		Categorical Limitation	Subtotal (lbs/day)	Categorical Limitation	Subtotal (lbs/day)
420.54 (NSPS)	4,069.1 Tons/Day	0.0000313 lbs/1000lbs	0.255	0.0000939 lbs/1000lbs	0.764
Total Lead Limitation		0.255 lbs/day		0.764 lbs/day	

Zinc					
40 CFR	Production	Monthly Average		Daily Maximum	
		Categorical Limitation	Subtotal (lbs/day)	Categorical Limitation	Subtotal (lbs/day)
420.54 (NSPS)	4,069.1 Tons/Day	0.0000469 lbs/1000lbs	0.382	0.000141 lbs/1000lbs	1.15
Total Zinc Limitation		0.382 lbs/day		1.15 lbs/day	

The categorical limitations included at Internal Outfall 701 are:

- TSS, Lead, and Zinc

  The above mentioned parameters have TBELs that are more stringent than the Water Quality-Based Effluent Limitations (WQBELs). Therefore, the TBELs for monthly average and daily maximums, identified in the tables above, are included at Internal Outfall 701.

Internal Outfall 702

The new treatment system for the continuous casting process wastewaters is incorporated into this NPDES permit. Internal monitoring point 702 will be included to regulate the discharge in regards to applicable categorical effluent limits for the continuous casting operations (40 CFR 420.60). As indicated in the previous permit, New Source Performance Standards (NSPS) are included for the continuous casting operations and are more stringent than the BAT/BPT limitations.

ED_002857_00000137-00106

The facility has indicated that it is feasible to direct the treated effluent from the continuous casting treatment system to the BOF and evaporated. Therefore, TBELs at Internal Outfall 702 will only apply when wastewater from 702 is expected to be discharged to the receiving stream. Flow at Internal Outfall 702 will be monitored regardless of the wastestream's fate.

Total Suspended Solids					
40 CFR	Production	Monthly Average		Daily Maximum	
		Categorical Limitation	Subtotal (lbs/day)	Categorical Limitation	Subtotal (lbs/day)
420.64 (NSPS)	11,558.7 Tons/Day	0.00261 lbs/1000lbs	60.3	0.00730 lbs/1000lbs	169
Total TSS Limitation		60.3 lbs/day		169 lbs/day	

Oil and Grease					
40 CFR	Production	Monthly Average		Daily Maximum	
		Categorical Limitation	Subtotal (lbs/day)	Categorical Limitation	Subtotal (lbs/day)
420.64 (NSPS)	11,558.7 Tons/Day	0.00104 lbs/1000lbs	24.0	0.00313 lbs/1000lbs	72.4
Total O+G Limitation		24.0 lbs/day		72.4 lbs/day	

Lead					
40 CFR	Production	Monthly Average		Daily Maximum	
		Categorical Limitation	Subtotal (lbs/day)	Categorical Limitation	Subtotal (lbs/day)
420.64 (NSPS)	11,558.7 Tons/Day	0.0000313 lbs/1000lbs	0.724	0.0000939 lbs/1000lbs	2.17
Total Lead Limitation		0.724 lbs/day		2.17 lbs/day	

Zinc					
40 CFR	Production	Monthly Average		Daily Maximum	
		Categorical Limitation	Subtotal (lbs/day)	Categorical Limitation	Subtotal (lbs/day)
420.64 (NSPS)	11,558.7 Tons/Day	0.0000469 lbs/1000lbs	1.08	0.000141 lbs/1000lbs	3.26
Total Zinc Limitation		1.08 lbs/day		3.26 lbs/day	

The categorical limitations included at Internal Outfall 702 are:

- TSS, O+G, Lead, and Zinc

  The above mentioned parameters have TBELs that are more stringent than the Water Quality-Based Effluent Limitations (WQBELs). Therefore, the TBELs for

monthly average and daily maximums, identified in the tables above, are included at Internal Outfall 702.

Outfall 012

Outfall 012 currently consists of storm water, ground water from basement sumps, non-contact cooling water and discharges from Internal Outfalls 111 and 211. No categorical limits apply at this point.

Internal Outfall 111

Internal Outfall 111 consists of process wastewaters from the Hot Strip Mill (40 CFR 420.70). Internal Outfall 111 is designated as immediately after the filter plant but prior to entry into the North Lagoon.

Total Suspended Solids					
40 CFR	Production	Monthly Average		Daily Maximum	
		Categorical Limitation	Subtotal (lbs/day)	Categorical Limitation	Subtotal (lbs/day)
420.72(c)(1) (BPT)	11,664 Tons/Day	0.160 lbs/1000lbs	3,732	0.427 lbs/1000lbs	9,961
420.73 (BAT)		-------	---------	--------	--------
Total TSS Limitation		3,732 lbs/day		9,961 lbs/day	

Oil and Grease					
40 CFR	Production	Monthly Average		Daily Maximum	
		Categorical Limitation	Subtotal (lbs/day)	Categorical Limitation	Subtotal (lbs/day)
420.72(c)(1) (BPT)	11,664 Tons/Day	1/3 x 0.107 lbs/1000lbs*	832*	0.107 lbs/1000lbs	2,496
420.73 (BAT)		-------	---------	--------	--------
Total O+G Limitation		832* lbs/day		2,496 lbs/day	

The categorical limitations included at Internal Outfall 111 are:

- TSS and O+G

The above mentioned parameters have TBELs that are more stringent than the Water Quality-Based Effluent Limitations (WQBELs). Therefore, the TBELs for monthly average and daily maximums, identified in the tables above, are included for Internal Outfall 111. However, the wastewaters from Internal Outfall 111 and 211 have the potential to comingle. Therefore, reporting requirements will be incorporated at Internal Outfall 111 and the summation of mass loading for 111 and 211 will be incorporated at Internal Outfall 411.

* There are no categorical monthly average limitations for oil and grease at Internal Outfall 111. Since there is an inherent contribution of oil and grease, that must be considered for calculation at Internal Outfall 411. IDEM has determined ,under authority of BPJ, that 1/3 of the daily

ED_002857_00000137-00108

maximum limitations will be used to calculate the summation of oil and grease monthly limitations at Internal Outfall 411.

Internal Outfall 211

Internal Outfall 211 consists of pickling (40 CFR 420.90) and cold rolling process wastewaters (40 CFR 420.100). Internal Outfall 211 is designated as immediately after the Oily Wastewater Treatment Plant but prior to comingling with any other wastestreams.

Total Suspended Solids					
40 CFR	Production	Monthly Average		Daily Maximum	
		Categorical Limitation	Subtotal (lbs/day)	Categorical Limitation	Subtotal (lbs/day)
420.92(b)(2) (BPT)	4,335.6 Tons/Day	0.0350 lbs/1000lbs	303	0.0818 lbs/1000lbs	709
420.93(b)(2) (BAT)		-------	---------	--------	--------
420.92(b)(4) (BPT)	2 Scrubbers	2.45 kg/day	10.8	5.72 kg/day	25.2
420.93(b)(4) (BAT)		-------	---------	--------	--------
420.102(a)(2) (BPT)	4,961.5 Tons/Day	0.00313 lbs/1000lbs	31.1	0.00626 lbs/1000lbs	62.1
420.103(a)(2) (BAT)		-------	---------	---------	--------
420.102(a)(5) (BPT)	3,038.6 Tons/Day	0.0501 lbs/1000lbs	304	0.100 lbs/1000lbs	608
420.103(a)(5) (BAT)		-------	---------	---------	--------
Total TSS Limitation		649 lbs/day		1,404 lbs/day	

[1] Below is an example TSS calculation for Hydrochloric Acid Pickling; Fume Scrubbers:

$$\text{TSS Average Monthly Limit} = 2.45\frac{kg}{day} \times 2.20\frac{lb}{kg} \times 2Scrubbers = 10.8\frac{lb}{day}$$

Oil and Grease					
40 CFR	Production	Monthly Average		Daily Maximum	
		Categorical Limitation	Subtotal (lbs/day)	Categorical Limitation	Subtotal (lbs/day)
420.92(b)(2) (BPT)	4,335.6 Tons/Day	0.0117 lbs/1000lbs	101	0.0350 lbs/1000lbs	303
420.93(b)(2) (BAT)		-------	---------	--------	--------
420.92(b)(4) (BPT)	2 Scrubbers	0.819 kg/day	3.60	2.45 kg/day	10.8
420.93(b)(4) (BAT)		-------	---------	--------	--------
420.102(a)(2) (BPT)	4,961.5 Tons/Day	0.00104 lbs/1000lbs	10.3	0.00261 lbs/1000lbs	25.9
420.103(a)(2) (BAT)		-------	---------	---------	--------
420.102(a)(5) (BPT)	3,038.6 Tons/Day	0.0167 lbs/1000lbs	101	0.0417 lbs/1000lbs	253
420.103(a)(5) (BAT)		-------	---------	---------	--------
Total O+G Limitation		216 lbs/day		593 lbs/day	

ED_002857_00000137-00109

Lead					
40 CFR	Production	Monthly Average		Daily Maximum	
		Categorical Limitation	Subtotal (lbs/day)	Categorical Limitation	Subtotal (lbs/day)
420.92(b)(2) (BPT)	4,335.6 Tons/Day	0.000175 lbs/1000lbs	1.52	0.000526 lbs/1000lbs	4.56
420.93(b)(2) (BAT)		0.000175 lbs/1000lbs	1.52	0.000526 lbs/1000lbs	4.56
420.92(b)(4) (BPT)	2 Scrubbers	0.0123 kg/day	0.0541	0.0368 kg/day	0.162
420.93(b)(4) (BAT)		0.0123 kg/day	0.0541	0.0368 kg/day	0.162
420.102(a)(2) (BPT)	4,961.5 Tons/Day	0.0000156 lbs/1000lbs	0.155	0.0000469 lbs/1000lbs	0.465
420.103(a)(2) (BAT)		0.0000156 lbs/1000lbs	0.155	0.0000469 lbs/1000lbs	0.465
420.102(a)(5) (BPT)	3,038.6 Tons/Day	0.000250 lbs/1000lbs	1.52	0.000751 lbs/1000lbs	4.56
420.103(a)(5) (BAT)		0.000250 lbs/1000lbs	1.52	0.000751 lbs/1000lbs	4.56
Total Lead Limitation		3.25 lbs/day		9.75 lbs/day	

Zinc					
40 CFR	Production	Monthly Average		Daily Maximum	
		Categorical Limitation	Subtotal (lbs/day)	Categorical Limitation	Subtotal (lbs/day)
420.92(b)(2) (BPT)	4,335.6 Tons/Day	0.000234 lbs/1000lbs	2.03	0.000701 lbs/1000lbs	6.08
420.93(b)(2) (BAT)		0.000234 lbs/1000lbs	2.03	0.000701 lbs/1000lbs	6.08
420.92(b)(4) (BPT)	2 Scrubbers	0.0164 kg/day	0.0722	0.0491 kg/day	0.216
420.93(b)(4) (BAT)		0.0164 kg/day	0.0722	0.0491 kg/day	0.216
420.102(a)(2) (BPT)	4,961.5 Tons/Day	0.0000104 lbs/1000lbs	0.103	0.0000313 lbs/1000lbs	0.311
420.103(a)(2) (BAT)		0.0000104 lbs/1000lbs	0.103	0.0000313 lbs/1000lbs	0.311
420.102(a)(5) (BPT)	3,038.6 Tons/Day	0.000167 lbs/1000lbs	1.01	0.000501 lbs/1000lbs	3.04
420.103(a)(5) (BAT)		0.000167 lbs/1000lbs	1.01	0.000501 lbs/1000lbs	3.04
Total Zinc Limitation		3.22 lbs/day		9.65 lbs/day	

ED_002857_00000137-00110

Chromium					
40 CFR	Production	Monthly Average		Daily Maximum	
		Categorical Limitation	Subtotal (lbs/day)	Categorical Limitation	Subtotal (lbs/day)
420.92(b)(2) (BPT) **420.93(b)(2)** (BAT)	4,335.6 Tons/Day	PARAMETER NOT IDENTIFIED IN THIS CATEGORY			
420.92(b)(4) (BPT) **420.93(b)(4)** (BAT)	2 Scrubbers	PARAMETER NOT IDENTIFIED IN THIS CATEGORY			
420.102(a)(2) (BPT) **420.103(a)(2)** (BAT)	4,961.5 Tons/Day	COLD ROLLING WASTEWATERS ARE NOT TREATED WITH DESCALING OR COMBINATION ACID PICKLING WASTEWATERS. THEREFORE, CHROMIUM LIMITATIONS ARE NOT APPLICABLE FROM THIS CATEGORY.			
420.102(a)(5) (BPT) **420.103(a)(5)** (BAT)	3,038.6 Tons/Day	COLD ROLLING WASTEWATERS ARE NOT TREATED WITH DESCALING OR COMBINATION ACID PICKLING WASTEWATERS. THEREFORE, CHROMIUM LIMITATIONS ARE NOT APPLICABLE FROM THIS CATEGORY.			
Total Chromium Limitation		NOT APPLICABLE		NOT APPLICABLE	

Nickel					
40 CFR	Production	Monthly Average		Daily Maximum	
		Categorical Limitation	Subtotal (lbs/day)	Categorical Limitation	Subtotal (lbs/day)
420.92(b)(2) (BPT) **420.93(b)(2)** (BAT)	4,335.6 Tons/Day	PARAMETER NOT IDENTIFIED IN THIS CATEGORY			
420.92(b)(4) (BPT) **420.93(b)(4)** (BAT)	2 Scrubbers	PARAMETER NOT IDENTIFIED IN THIS CATEGORY			
420.102(a)(2) (BPT) **420.103(a)(2)** (BAT)	4,961.5 Tons/Day	COLD ROLLING WASTEWATERS ARE NOT TREATED WITH DESCALING OR COMBINATION ACID PICKLING WASTEWATERS. THEREFORE, CHROMIUM LIMITATIONS ARE NOT APPLICABLE FROM THIS CATEGORY.			
420.102(a)(5) (BPT) **420.103(a)(5)** (BAT)	3,038.6 Tons/Day	COLD ROLLING WASTEWATERS ARE NOT TREATED WITH DESCALING OR COMBINATION ACID PICKLING WASTEWATERS. THEREFORE, CHROMIUM LIMITATIONS ARE NOT APPLICABLE FROM THIS CATEGORY.			
Total Nickel Limitation		NOT APPLICABLE		NOT APPLICABLE	

ED_002857_00000137-00111

Naphthalene					
40 CFR	Production	Monthly Average		Daily Maximum	
		Categorical Limitation	Subtotal (lbs/day)	Categorical Limitation	Subtotal (lbs/day)
420.92(b)(2) (BPT)	4,335.6 Tons/Day	PARAMETER NOT IDENTIFIED IN THIS CATEGORY			
420.93(b)(2) (BAT)					
420.92(b)(4) (BPT)	2 Scrubbers	PARAMETER NOT IDENTIFIED IN THIS CATEGORY			
420.93(b)(4) (BAT)					
420.102(a)(2) (BPT)	4,961.5 Tons/Day	----------	--------	0.0000104 lbs/1000lbs	0.103
420.103(a)(2) (BAT)		----------	--------	0.0000104 lbs/1000lbs	0.103
420.102(a)(5) (BPT)	3,038.6 Tons/Day	----------	--------	0.000167 lbs/1000lbs	1.01
420.103(a)(5) (BAT)		----------	--------	0.000167 lbs/1000lbs	1.01
Total Naphthalene Limitation		----------		1.11 lbs/day	

Tetrachloroethylene					
40 CFR	Production	Monthly Average		Daily Maximum	
		Categorical Limitation	Subtotal (lbs/day)	Categorical Limitation	Subtotal (lbs/day)
420.92(b)(2) (BPT)	4,335.6 Tons/Day	PARAMETER NOT IDENTIFIED IN THIS CATEGORY			
420.93(b)(2) (BAT)					
420.92(b)(4) (BPT)	2 Scrubbers	PARAMETER NOT IDENTIFIED IN THIS CATEGORY			
420.93(b)(4) (BAT)					
420.102(a)(2) (BPT)	4,961.5 Tons/Day	----------	--------	0.0000156 lbs/1000lbs	0.155
420.103(a)(2) (BAT)		----------	--------	0.0000156 lbs/1000lbs	0.155
420.102(a)(5) (BPT)	3,038.6 Tons/Day	----------	--------	0.000250 lbs/1000lbs	1.52
420.103(a)(5) (BAT)		----------	--------	0.000250 lbs/1000lbs	1.52
Total TCE Limitation		----------		1.68 lbs/day	

The categorical limitations included at Internal Outfall 211 are:

- TSS and O+G,

  The above mentioned parameters have TBELs that are more stringent than the Water Quality-Based Effluent Limitations (WQBELs). Therefore, the TBELs for monthly average and daily maximums, identified in the tables above, are included for Internal Outfall 211. However, reporting requirements will be incorporated at Internal Outfall 211 and the summation of mass loading for 111 and 211 will be incorporated at Internal Outfall 411 because wastewater from the oily waste sumps and the rolling operations have the potential to commingle with wastewater from Internal Outfall 111.

- Lead and Zinc

  The calculated daily maximum WQBEL for lead is more stringent than the TBELs calculated in the table above. Therefore, the daily maximum WQBEL for this parameter has have been included at Internal Outfall 211 to ensure Indiana's Water Quality Standards are not violated. The calculated monthly average TBEL

for lead, however, is more stringent than the WQBEL and, since it is specific to Internal Outfall 211, is enforced at Internal Outfall 211; not Internal Outfall 411.

The TBEL for zinc is more stringent than the calculated WQBEL. Therefore, daily maximum and monthly average TBELS for zinc is included at Internal Outfall 211. Since zinc is specific to Internal Outfall 211, limitations will apply there; not at Internal Outfall 411.

- Naphthalene and Tetrachloroethylene (TCE)

  The daily maximum TBELs identified in the table above for naphthalene and TCE are more stringent than the WQBELs for those parameters and have been included at Internal Outfall 211. The above identified parameters are specific to Internal Outfall 211 and will apply there; not at Internal Outfall 411.

Internal Outfall 411

The permittee requested during the application process that an additional monitoring point be established that included the summation of mass loadings at Internal Outfalls 111 and 211. Due to the fact that the wastestreams from each treatment system has the ability to comingle, Internal Outfall 411 is incorporated as the summation of TBELs at Internal Outfalls 111 and 211 for TSS and Oil and Grease. Zinc, lead, naphthalene, and TCE are specific to Internal Outfall 211 and TBELs will be enforced there.

5.3 Water Quality-Based Effluent Limits

The water quality-based effluent limitations for this facility are based on water quality criteria in 327 IAC 2-1.5-8 or under the procedures described in 327 IAC 2-1.5-11 through 327 IAC 2-1.5-16 and implementation procedures in 327 IAC 5. Further discussion concerning water-quality based effluent derivation has been included as Attachment A of this Fact Sheet.

- Flow

  The permittee's flow at each outfall is to be monitored in accordance with 327 IAC 5-2-13(a)2.

- pH

  Limitations for pH for each outfall in the proposed permit are taken from 327 IAC 2-1.5-8(c)(2).

Outfall 002

Outfall 002 contains storm water, ground water from basement sumps, and non-contact cooling wastewater from the pickling and hot-dip galvanizing lines. The following parameters have been included at Outfall 002.

- Oil and Grease (O+G) and Total Suspended Solids (TSS

  The above mentioned parameters are carried over from the previous permit. Reporting requirements will be included for the above mentioned parameters at Outfall 002.

- Temperature and Thermal Discharge Report

  Based on the results of instream sampling and a multi-discharger thermal model, the discharges from AM West do not have a reasonable potential to exceed a water quality criterion for temperature. However, in accordance with 327 IAC 5-2-11.5(e), the commissioner may require monitoring for a pollutant of concern even if it is determined that a WQBEL is not required based on a reasonable

ED_002857_00000137-00113

potential determination. Therefore, monitoring for temperature and thermal discharge is added to this outfall.

- Total Residual Chlorine (TRC)

  The TRC effluent limit was calculated in the WLA and is 1.5 lbs/day (0.016 mg/l) for monthly average and 3.5 lbs/day (0.038 mg/l) for the daily maximum. The limit is included because the facility chlorinates/dechloronates water. The daily maximum WQBEL for TRC is greater than the Level of Detection (LOD) but less than the Level of Quantization (LOQ). Compliance with the daily maximum concentration limit will be demonstrated if the observed effluent concentrations are less than the LOQ (0.06 mg/l). Compliance with the daily maximum mass value will be demonstrated if the calculated mass value is less than 19.7 lbs/day. This is calculated by multiplying the LOQ by the discharge flow in MGD and by a conversion factor of 8.345. Monitoring for TRC shall be performed during Zebra or Quagga mussel intake chlorination, and continue for three additional days after Zebra or Quagga mussel treatment has been completed.

- Mercury

  Mercury was identified in the permittee's application in quantities that showed a Reasonable Potential to Exceed (RPE) Indiana's Water Quality Criteria. Therefore, WQBELs for mercury were calculated in the WLA report and identify the monthly average as 0.00012 lbs/day (1.3 ng/l) and the daily maximum as 0.00030 lbs/day (3.2 ng/l) at Outfall 002. A fifty-four (54) month schedule of compliance has been incorporated into this permit for this parameter.

- Free Cyanide and Fluoride

  Monitoring requirements for the above mentioned parameters is included to determine if a Reasonable Potential to Exceed (RPE) Indiana WQBELs exists. The monitoring of these parameters will begin no later than the thirty-sixth (36) months from the effective date of the permit and will last for twelve (12) consecutive months. The information gathered from the monitoring program will be used for RPE calculations in the next NPDES permit renewal and shall be submitted to IDEM with the next renewal application.

Outfall 009

Outfall 009 contains storm water, ground water from basement sumps, and non-contact cooling wastewater from the powerhouse area. The discharges to Outfall 009 will incorporate a new treatment system for the blast furnace and sinter plant blowdown. Categorical limits will apply at Internal Outfall 509.

- O+G, TSS, Lead, and Zinc

  The above mentioned parameters are identified in the federally promulgated guidelines for this facility. The WQBELs for the above mentioned parameters is less stringent than the TBELs. TBELs will be monitored at Internal Outfall 509. However, reporting requirements will be included for the above mentioned parameters at Outfall 009.

- Temperature and Thermal Discharge Report

  Based on the results of instream sampling and a multi-discharger thermal model, the discharges from AM West do not have a reasonable potential to exceed a water quality criterion for temperature. However, in accordance with 327 IAC 5-

2-11.5(e), the commissioner may require monitoring for a pollutant of concern even if it is determined that a WQBEL is not required based on a reasonable potential determination. Therefore, monitoring for temperature and thermal discharge is added to this outfall.

- Total Residual Chlorine (TRC)

The TRC effluent limit was calculated in the WLA and is 5.5 lbs/day (0.012 mg/l) for monthly average and 13 lbs/day (0.028 mg/l) for the daily maximum. The limit is included because the facility chlorinates/dechloronates water. The daily maximum WQBEL for TRC is greater than the Level of Detection (LOD) but less than the Level of Quantization (LOQ). Compliance with the daily maximum concentration limit will be demonstrated if the observed effluent concentrations are less than the LOQ (0.06 mg/l). Compliance with the daily maximum mass value will be demonstrated if the calculated mass value is less than 27.7 lbs/day. This is calculated by multiplying the LOQ by the discharge flow in MGD and by a conversion factor of 8.345. Monitoring for TRC shall be performed during Zebra or Quagga mussel intake chlorination, and continue for three additional days after Zebra or Quagga mussel treatment has been completed.

- Free Cyanide and Fluoride

Monitoring requirements for the above mentioned parameters is included to determine if a Reasonable Potential to Exceed (RPE) Indiana WQBELs exists. The monitoring of these parameters will begin no later than the thirty-sixth (36) months from the effective date of the permit and will last for twelve (12) consecutive months. The information gathered from the monitoring program will be used for RPE calculations in the next NPDES permit renewal and shall be submitted to IDEM with the next renewal application.

- Ammonia-N and Phenols

Section 301(g) of the Clean Water Act provides variances to BAT limitations. The facility has a previously approved 301(g) variance for ammonia and phenols. That variance approved net limitations for ammonia and phenols for Outfalls 009, 010, and 011. The facility has submitted a request for a continuance of the 301(g) variance for ammonia and phenols (4AAP). This request proposes a gross ammonia-N limitation of 600 lbs/day monthly average and 1,450 lbs/day daily maximum and a phenol daily maximum limitation of 21 lbs/day at Internal Outfall 509. IDEM has reviewed the submittal from ArcelorMittal and, as a result of that review, determined that the net limit requirements for the three outfalls shall remain in the permit. The variance will assign specific net limits for ammonia (as N) and phenols (4AAP) as before but since the sinter plant and blast furnace systems were removed from the Outfall 011 discharge and redirected to Outfall 009, the ammonia and phenol allocations have been rearranged but the total net limits will still apply across the three outfalls as before.

- Mercury

Mercury was identified in the permittee's application in quantities that showed a Reasonable Potential to Exceed (RPE) Indiana's Water Quality Criteria. Therefore, WQBELs for mercury were calculated in the WLA report and identify the monthly average as 0.00060 lbs/day (1.3 ng/l) and the daily maximum as

ED_002857_00000137-00115

0.0015 lbs/day (3.2 ng/l). A fifty-four (54) month schedule of compliance has been incorporated into this permit for this parameter.

Outfall 010

Outfall 010 consists of storm water, ground water from basement sumps, and non-contact cooling wastewater from the blast furnace, sinter plant, powerhouse and boiler house. Outfall 010 also collects overflow from Outfall 009 and from the blast furnace recirculation system in the event of an emergency.

- O+G, TSS, Lead, and Zinc

  The above mentioned parameters are identified in the federally promulgated guidelines for this facility at Outfall 009. Since Outfall 010 accepts an overflow from 009, TBELs are still applicable at Internal Outfall 509. In addition, reporting requirements for the above mentioned parameters will be included at Outfall 010.

- Total Residual Chlorine (TRC)

  The TRC effluent limit was calculated in the WLA and is 3.7 lbs/day (0.012 mg/l) for monthly average and 8.6 lbs/day (0.028 mg/l) for the daily maximum. The limit is included because the facility chlorinates/dechloronates water. The daily maximum WQBEL for TRC is greater than the Level of Detection (LOD) but less than the Level of Quantization (LOQ). Compliance with the daily maximum concentration limit will be demonstrated if the observed effluent concentrations are less than the LOQ (0.06 mg/l). Compliance with the daily maximum mass value will be demonstrated if the calculated mass value is less than 18.3 lbs/day. This is calculated by multiplying the LOQ by the discharge flow in MGD and by a conversion factor of 8.345. Monitoring for TRC shall be performed during Zebra or Quagga mussel intake chlorination, and continue for three additional days after Zebra or Quagga mussel treatment has been completed.

- Temperature and Thermal Discharge Report

  Based on the results of instream sampling and a multi-discharger thermal model, the discharges from AM West do not have a reasonable potential to exceed a water quality criterion for temperature. However, in accordance with 327 IAC 5-2-11.5(e), the commissioner may require monitoring for a pollutant of concern even if it is determined that a WQBEL is not required based on a reasonable potential determination. Therefore, monitoring for temperature and thermal discharge is added to this outfall.

- Free Cyanide and Fluoride

  Monitoring requirements for the above mentioned parameters is included to determine if a Reasonable Potential to Exceed (RPE) Indiana WQBELs exists. The monitoring of these parameters will begin no later than the thirty-sixth (36) months from the effective date of the permit and will last for twelve (12) consecutive months. The information gathered from the monitoring program will be used for RPE calculations in the next NPDES permit renewal and shall be submitted to IDEM with the next renewal application.

- Ammonia and Phenols

  Section 301(g) of the Clean Water Act provides variances to BAT limitations. The facility has a previously approved 301(g) variance for ammonia and phenols.

ED_002857_00000137-00116

That variance approved net limitations for ammonia and phenols for Outfalls 009, 010, and 011. The facility has submitted a request for a continuance of the 301(g) variance for ammonia and phenols (4AAP). This request proposes a gross ammonia-N limitation of 600 lbs/day monthly average and 1,450 lbs/day daily maximum and a phenol daily maximum limitation of 21 lbs/day at Internal Outfall 509. IDEM has reviewed the submittal from ArcelorMittal and, as a result of that review, determined that the net limit requirements for the three outfalls shall remain in the permit. The variance will assign specific net limits for ammonia (as N) and phenols (4AAP) as before but since the sinter plant and blast furnace systems were removed from the Outfall 011 discharge and redirected to Outfall 009, the ammonia and phenol allocations have been rearranged but the total net limits will still apply across the three outfalls as before.

- Mercury

Mercury was identified in the permittee's application in quantities that showed a Reasonable Potential to Exceed (RPE) Indiana's Water Quality Criteria. Therefore, WQBELs for mercury were calculated in the WLA report and identify the monthly average as 0.00040 lbs/day (1.3 ng/l) and the daily maximum as 0.00098 lbs/day (3.2 ng/l). A fifty-four (54) month schedule of compliance has been incorporated into this permit for this parameter.

Outfall 011

Outfall 011 currently consists of storm water, ground water, vacuum degassing, continuous casting, and on-site oil processing facility process wastewaters, boiler house wastewater, vacuum truck decant as well as non-contact cooling water serving the BOF, vacuum degasser and continuous caster. The proposed changes contributing to Outfall 011 will incorporate a new treatment system for the vacuum degasser process wastewater and continuous casting process wastewaters.

- TSS, O+G, Lead and Zinc

The above mentioned parameters are identified in the federally promulgated guidelines for this facility. The WQBELs for the above mentioned parameters is less stringent than the TBELs. TBELs will be monitored at Internal Outfalls 701 and 702. However, reporting requirements will be included for the above mentioned parameters at Outfall 011.

- Ammonia, and Phenols

Section 301(g) of the Clean Water Act provides variances to BAT limitations. The facility has a previously approved 301(g) variance for ammonia and phenols. That variance approved net limitations for ammonia and phenols for Outfalls 009, 010, and 011. The facility has submitted a request for a continuance of the 301(g) variance for ammonia and phenols (4AAP). This request proposes a gross ammonia-N limitation of 600 lbs/day monthly average and 1,450 lbs/day daily maximum and a phenol daily maximum limitation of 21 lbs/day at Internal Outfall 509. IDEM has reviewed the submittal from ArcelorMittal and, as a result of that review, determined that the net limit requirements for the three outfalls shall remain in the permit. The variance will assign specific net limits for ammonia (as N) and phenols (4AAP) as before but since the sinter plant and blast furnace systems were removed from the Outfall 011 discharge and redirected to Outfall 009, the ammonia and phenol allocations have been rearranged but the total net limits will still apply across the three outfalls as before.

ED_002857_00000137-00117

- Free Cyanide and Fluoride

Monitoring requirements for the above mentioned parameters is included to determine if a Reasonable Potential to Exceed (RPE) Indiana WQBELs exists. The monitoring of these parameters will begin no later than the thirty-sixth (36) months from the effective date of the permit and will last for twelve (12) consecutive months. The information gathered from the monitoring program will be used for RPE calculations in the next NPDES permit renewal and shall be submitted to IDEM with the next renewal application.

- Temperature and Thermal Discharge Report

Based on the results of instream sampling and a multi-discharger thermal model, the discharges from AM West do not have a reasonable potential to exceed a water quality criterion for temperature. However, in accordance with 327 IAC 5-2-11.5(e), the commissioner may require monitoring for a pollutant of concern even if it is determined that a WQBEL is not required based on a reasonable potential determination. Therefore, monitoring for temperature and thermal discharge is added to this outfall.

- Total Residual Chlorine (TRC)

The TRC effluent limit was calculated in the WLA and is 2.5 lbs/day (0.013 mg/l) for monthly average and 5.9 lbs/day (0.030 mg/l) for the daily maximum. The limit is included because the facility chlorinates/dechloronates water. The daily maximum WQBEL for TRC is greater than the Level of Detection (LOD) but less than the Level of Quantization (LOQ). Compliance with the daily maximum concentration limit will be demonstrated if the observed effluent concentrations are less than the LOQ (0.06 mg/l). Compliance with the daily maximum mass value will be demonstrated if the calculated mass value is less than 11.7 lbs/day. This is calculated by multiplying the LOQ by the discharge flow in MGD and by a conversion factor of 8.345. Monitoring for TRC shall be performed during Zebra or Quagga mussel intake chlorination, and continue for three additional days after Zebra or Quagga mussel treatment has been completed.

- Mercury

Mercury was identified in the permittee's application in quantities that showed a Reasonable Potential to Exceed (RPE) Indiana's Water Quality Criteria. Therefore, WQBELs for mercury were calculated in the WLA report and identify the monthly average as 0.00040 lbs/day (1.3 ng/l) and the daily maximum as 0.00098 lbs/day (3.2 ng/l). A fifty-four (54) month schedule of compliance has been incorporated into this permit for this parameter.

Outfall 012

Outfall 012 consists of storm water, ground water from basement sumps, and discharges from Internal Outfalls 111 and 211.

- Ammonia and Mercury

Monitoring requirements for the above mentioned parameters is included to determine if a Reasonable Potential to Exceed (RPE) Indiana WQBELs exists.

- Vanadium and Zinc

Vanadium and zinc were identified in the permittee's application in quantities that showed a Reasonable Potential to Exceed (RPE) Indiana's Water Quality

ED_002857_00000137-00118

Criteria. Therefore, WQBELs for vanadium and zinc were calculated in the Attachment A report and identify the monthly average as 13 lbs/day (0.022mg/l) and the daily maximum as 26 lbs/day (0.044mg/l) for vanadium and 76 lbs/day (0.13mg/l) monthly average and 150 lbs/day (0.26mg/l) daily maximum for zinc.

- Lead

The daily maximum WQBEL for lead is more stringent than the daily maximum TBEL. Therefore, the daily maximum WQBEL for lead is included at Internal Outfall 211 in lieu of the less stringent TBEL.

- Total Residual Chlorine (TRC)

The TRC effluent limit was calculated in the WLA and is 5.8 lbs/day (0.010 mg/l) for monthly average and 12 lbs/day (0.020 mg/l) for the daily maximum. The limit is included because the facility chlorinates/dechloronates water. The daily maximum WQBEL for TRC is greater than the Level of Detection (LOD) but less than the Level of Quantization (LOQ). Compliance with the daily maximum concentration limit will be demonstrated if the observed effluent concentrations are less than the LOQ (0.06 mg/l). Compliance with the daily maximum mass value will be demonstrated if the calculated mass value is less than 35.0 lbs/day. This is calculated by multiplying the LOQ by the discharge flow in MGD and by a conversion factor of 8.345. Monitoring for TRC shall be performed during Zebra or Quagga mussel intake chlorination, and continue for three additional days after Zebra or Quagga mussel treatment has been completed.

5.4 Whole Effluent Toxicity

The Indiana Water Quality Standards require that a discharge shall not cause acute toxicity, as measured by Whole Effluent Toxicity Tests (WETT), at any point in the water body and that a discharge shall not cause chronic toxicity, as measured by whole effluent toxicity tests, outside of the applicable mixing zone. Per Indiana Rule 327 IAC 5-2-11 .5(c)(2), the commissioner may include, in the NPDES permit, WETT requirements to generate the data needed to adequately characterized the toxicity of the effluent to aquatic life.

Therefore, the permittee is required to conduct WETT at Outfalls 009, 011, and 012 based upon the combination of process wastestreams and the use of several water treatment additives. This does not negate the necessity to submit Water Treatment Additive (WTA) approval worksheets for additives used at this site.

5.5 Antibacksliding

Pursuant to 327 IAC 5-2-10(11) a permit may not be renewed, reissued or modified which contain effluent limitations that are less stringent than the comparable effluent limitation in the previous permit. Antibacksliding is not an issue in this NPDES permit.

5.6 Antidegradation

The Indiana Harbor and Ship Canal is a high quality water of the Great Lakes Basin, as defined in 327 IAC 2-1.5-4. The Indiana Harbor and Ship Canal is also a tributary to Lake Michigan, which is designated as an Outstanding State Resource Water (OSRW). According to 327 IAC 5-2-11.7(a)(2), for a new or increased discharge of a pollutant or pollutant parameter from a new or existing Great Lakes discharger into a tributary of an OSRW for which a new or increased permit limit would be required, the following apply:

ED_002857_00000137-00119

(1) 5-2-11.3(a) and 5-2-11.3(b) apply to the new or increased discharge; and

(2) the discharge shall not cause a significant lowering of water quality in the OSRW.

A complete antidegradation review of the proposed ArcelorMittal permit is included in Attachment A of this Fact Sheet. Based on the antidegradation review, the Department has determined that the proposed permit complies with the antidegradation policy found in 2-1.5-4 and an antidegradation demonstration is not required.

New mass limits for Total Residual Chlorine are required at Outfalls 002, 009, 010 and 011. The current permit only has concentration limits at these outfalls and they are less stringent than the proposed concentration limits. The existing effluent flow was used to calculate the WQBELs for the proposed permit so the new mass limits will not result in a concentration increase outside of the mixing zone. Therefore, the new mass limits will not cause a significant lowering of water quality and antidegradation under 5-2-11.3(b) is satisfied.

New limits for Mercury are required at Outfalls 002, 009, 010 and 011 based on a reasonable potential analysis using data collected in 1999. Since the permit was last renewed in 1986, more stringent water quality criteria for Mercury have become effective and a new analytical method has become available that allows Mercury in the discharge to be quantified. The new limits for Mercury are a result of the following items in the antidegradation exemption in 5-2-11.3(b)(1)(C)(ii):

(AA) New or improved monitoring data.
(BB) New or improved analytical methods.
(CC) New or modified water quality criteria or values.

The new limits for Mercury are not a result of changes in pollutant loading and will not allow an increase in pollutant loading since the projected effluent quality is greater than the proposed effluent limits and the existing discharge flow was used to calculate the proposed mass limits. Therefore, the new limits for Mercury at Outfall 011 do not cause a lowering of water quality for Mercury and antidegradation under 5-2-11.3(a) is satisfied, and the new limits for Mercury at Outfalls 002, 009 and 010 do not cause a significant lowering of water quality for Mercury and antidegradation under 5-2-11.3(b) is satisfied.

A new concentration TBEL for 2,3,7,8-Tetrachlorodibenzofuran (2,3,7,8-TCDF) is required at Internal Outfall 509. A TBEL for this pollutant was added to the sintering subcategory under 40 CFR Part 420.23(a) during the 2002 revision of the Federal Effluent Limitations Guidelines for the Iron and Steel Manufacturing Point Source Category. Therefore, a TBEL for this pollutant was not applicable when the 1986 permit was issued. The new TBEL is a result of the application of a new Federal Effluent Limitation Guideline and falls under the antidegradation exemption in 5-2-11.3(b)(1)(C)(ii)(DD) so it does not cause a significant lowering of water quality and antidegradation under 5-2-11.3(b) is satisfied.

New TBELs for Naphthalene and Tetrachloroethylene are required at Internal Outfall 211 as a result of the new application of TBELs at this outfall and are a new application of Federal Effluent Limitations Guidelines. Therefore, the new TBELs fall under the antidegradation exemption in 5-2-11.7(b)(2)(D) and antidegradation under 5-2-11.7 is satisfied.

A new monthly average TBEL for Oil and Grease is required at Internal Outfall 411 which is a mathematical combination of the discharges from Internal Outfalls 111 and 211. Monthly average and daily maximum TBELs for Oil and Grease were authorized for the combination of

ED_002857_00000137-00120

Internal Outfalls 111 and 211 under the current permit, but only a daily maximum limit was applied. The Fact Sheet of the 1986 permit includes the calculation of monthly average and daily maximum TBELs for Oil and Grease at Internal Outfalls 111 and 211. The TBELs were a combination of the monthly average and daily maximum mass allowed for several process operations with separate TBELs. Monthly average TBELs were not provided for the Hot Strip Mill under 40 CFR 420.72(c)(1). A portion of the calculated daily maximum TBELs for other process operations at the facility were also bubbled to Internal Outfalls 111 and 211. Through application of BPJ, IDEM has calculated for the permit renewal, based on current production, monthly average mass limits for the 84-inch Hot Strip Mill at one-third of the daily maximum. In the Fact Sheet of the 1986 permit, the combined monthly average allowance for the process operations contributing to Internal Outfalls 111 and 211 that had monthly average TBELs was 321.31 lbs/day and the daily maximum TBEL for the Hot Strip Mill was 3142.2 lbs/day. The amount of daily maximum mass that was bubbled to Internal Outfalls 111 and 211 was 1154 lbs/day. The monthly average mass for the Hot Strip Mill calculated as one-third of the daily maximum is 1047.4 lbs/day. The monthly average mass bubbled calculated through BPJ as one-third of the daily maximum is 385 lbs/day. The monthly average Oil and Grease limit for Internal Outfalls 111 and 211 that was authorized, but not applied in the 1986 permit is 1754 lbs/day. The proposed monthly average TBEL for Oil and Grease at Internal Outfall 411 in the renewal permit is 1048 lbs/day. Therefore, the new monthly average limit does not allow an increase above what was authorized, but not applied in the current permit. The new TBEL is a new application of Federal Effluent Limitations Guidelines and falls under the antidegradation exemption in 5-2-11.7(b)(2)(D) so it is allowed and antidegradation under 5-2-11.7 is satisfied.

New limits for Vanadium and Zinc are required at Outfall 012 based on a reasonable potential analysis using data collected for the permit renewal. The new limits are a result of the following item in the antidegradation exemption in 5-2-11.7(b)(2):

(A) New or improved monitoring data.

The new limits for Vanadium and Zinc at Outfall 012 are not a result of changes in pollutant loading and will not allow an increase in pollutant loading since the projected effluent quality is greater than the proposed effluent limits and the existing discharge flow was used to calculate the proposed mass limits. The new limits fall under the antidegradation exemption in 5-2-11.7(b)(2)(A) so they are allowed and antidegradation under 5-2-11.7 is satisfied.

In accordance with 327 IAC 2.2-11.7(a)(2)(B), a new or increased discharge to a tributary of an OSRW may not cause a significant lowering of water quality in the downstream OSRW. The permittee is prohibited from undertaking any deliberate action that would result in a new or increased discharge of a Bioaccumulative Chemical of Concern (BCC) or a new or increased permit limit for a pollutant or pollutant parameter that is not a BCC unless one of the following is completed prior to the commencement of the action; (i) Information is submitted to the commissioner demonstrating that the proposed new or increased discharge will not cause a significant lowering of water quality; (ii) An antidegradation demonstration submitted and approved in accordance 327 IAC 5-2-11.3.

5.7 Stormwater

According to 40 CFR 122.26(b)(14)(ii) and 327 IAC 5-4-6(b)(1) facilities classified under Industrial Classification (SIC) Code 3312 – Steel Mill, are considered to be engaging in "industrial activity" for purposes of 40 CFR 122.26(b). Therefore the permittee is required to have all storm water discharges associated with industrial activity permitted. Treatment for storm water discharges associated with industrial activities is required to meet, at a minimum, best available technology economically achievable/best conventional pollutant control technology

(BAT/BCT) requirements. EPA has determined that non-numeric technology-based effluent limits have been determined to be equal to BPT/BAT/BCT for storm water associated with industrial activity.

Storm water associated with industrial activity must be assessed to determine compliance with all water quality standards. The non-numeric storm water conditions and effluent limits contain the technology-based effluent limitations. Effluent limitations, as defined in the CWA, are restrictions on quantities, rates, and concentrations of constituents which are discharged. Effective implementation of these requirements should meet the applicable water quality based effluent limitations. Violation of any of these effluent limitations constitutes a violation of the permit.

The technology-based effluent limitations require the permittee to minimize exposure of raw, final, or waste materials to rain, snow, snowmelt, and runoff. In doing so, the permittee is required, to the extent technologically available and economically practicable and achievable, to either locate industrial materials and activities inside or to protect them with storm resistant coverings. In addition, the permittee is required to: (1) use good housekeeping practices to keep exposed areas clean, (2) regularly inspect, test, maintain and repair all industrial equipment and systems to avoid situations that may result in leaks, spills, and other releases of pollutants in storm water discharges, (3) minimize the potential for leaks, spills and other releases that may be exposed to storm water and develop plans for effective response to such spills if or when they occur, (4) stabilize exposed area and contain runoff using structural and/or non-structural control measures to minimize onsite erosion and sedimentation, and the resulting discharge of pollutants, (5) divert, infiltrate, reuse, contain or otherwise reduce storm water runoff, to minimize pollutants in your discharges, (6) enclose or cover storage piles of salt or piles containing salt used for deicing or other commercial or industrial purposes, including maintenance of paved surfaces, (7) train all employees who work in areas where industrial materials or activities are exposed to storm water, or who are responsible for implementing activities necessary to meet the conditions of this permit (e.g., inspectors, maintenance personnel), including all members of your Pollution Prevention Team, (8) ensure that waste, garbage and floatable debris are not discharged to receiving waters by keeping exposed areas free of such materials or by intercepting them before they are discharged, and (9) minimize generation of dust and off-site tracking of raw, final or waste materials.

To meet the non-numeric effluent limitations in Part I.D.4, the permit requires ArcelorMittal West to select control measures (including best management practices) to address the selection and design considerations in Part I.D.3.

The permittee must control its discharge as necessary to meet applicable water quality standards. It is expected that compliance with the non-numeric effluent limitations and other terms and conditions in this permit will meet this effluent limitation. However, if at any time the permittee, or IDEM, determines that the discharge causes or contributes to an exceedance of applicable water quality standards, the permittee must take corrective actions, and conduct follow-up monitoring.

"Term and Condition" to Provide Information in a SWPPP

Distinct from the effluent limitation provisions in the permit, the permit requires the discharger to prepare a Storm water Pollution Prevention Plan (SWPPP) for its facility. The SWPPP is intended to document the selection, design, installation, and implementation (including inspection, maintenance, monitoring, and corrective action) of control measures being used to comply with the effluent limits set forth in Part I.D. of the permit. In general, the SWPPP must be kept up-to-date, and modified whenever necessary to reflect any changes in control measures that were found to be necessary to meet the effluent limitations in this permit.

The requirement to prepare a SWPPP is not an effluent limitation, rather it documents what practices the discharger is implementing to meet the effluent limitations in Part I.D. of the permit. The SWPPP is not an effluent limitation because it does not restrict quantities, rates, and concentrations of constituents which are discharged. Instead, the requirement to develop a SWPPP is a permit "term or condition" authorized under sections 402(a)(2) and 308 of the Act. Section 402(a)(2) states, "[t]he Administrator shall prescribe conditions for [NPDES] permits to assure compliance with the requirements of paragraph (1) of this subsection, including conditions on data and information collection, reporting, and such other requirements as he deems appropriate." The SWPPP requirements set forth in this permit are terms or conditions under the CWA because the discharger is documenting information on how it intends to comply with the effluent limitations (and inspection and evaluation requirements) contained elsewhere in the permit. Thus, the requirement to develop a SWPPP and keep it updated is no different than other information collection conditions, as authorized by section 402(a)(2), in other permits.

IDEM's Non-Numeric Effluent Limitations and SWPPP language was modeled from and is consistent with the EPA's Multi-Sector General Permit for Storm Water Discharges Associated with Industrial Activity, issued on September 29, 2008. It should be noted that EPA has developed a guidance document, "Storm Water Management for Industrial Activities: Developing Pollution Prevention Plans and Best Management Practices", 1992 to assist facilities in developing a SWPPP. The guidance contains worksheets, checklists, and model forms that should assist a facility in developing a SWPPP.

Public availability of documents

Part I.E.2.d(2) of the permit requires that the permittee retain a copy of the current SWPPP at the facility and it must be immediately available, at the time of an onsite inspection or upon request, to IDEM. Additionally, interested persons can request a copy of the SWPPP through IDEM. By requiring members of the public to request a copy of the SWPPP through IDEM, the Agency is able to provide the permittees with assurance that any Confidential Business Information contained within its SWPPP is not released to the public.

5.8 Water Treatment Additives

In the event that changes are to be made in the use of water treatment additives including dosage rates and concentrations contributing to Outfalls 002, 009, 010, 011, and 012, the permittee shall notify the Indiana Department of Environmental Management as required by Part II.C. 1. of this permit. The permittee must provide the acute and chronic aquatic toxicity information on any new or changed water treatment additives. The following water treatment additives, by outfall, have been approved for use:

<u>002</u>
7408, Bleach

<u>009</u>
7766, 1392, 8187, 1393, 3DT195, Bleach

<u>011</u>
71301, 7290E, ELIMINOX, N2, 22300, 1720, 1800, 750, Caustic, Hydrated Lime, 3DT195, 8103P, Bleach

<u>012</u>
Bleach, Caustic, 8356D

ED_002857_00000137-00123

During the public notice period, the facility requested the use of freeze protection agents. Due to the variability of which waters would be treated and discharged, toxicity information could not be identified at this time. This fact sheet hereby identifies the use freeze protection agents at the facility. However, it should be noted that the facility must submit the toxicological information, and receive approval from IDEM, prior to discharge of such waters.

6.0 PERMIT DRAFT DISCUSSION

6.1 Discharge Limitations

The permittee discharges to a waterbody that has been identified as a water of the state within the Great Lakes system. In addition to OSRW antidegradation implementation procedures, it is subject to other NPDES requirements specific to Great Lakes system dischargers under 327 IAC 2-1.5 and 327 IAC 5-2-11.2 through 327 IAC 5-2-11.6. These rules address water quality standards applicable to dischargers within the Great Lakes system and reasonable potential to exceed water quality standards procedures.

As required by 327 IAC 5-2-11.3(b)(2), Part II.A.16. of the renewal permit specifically prohibits the permittee from undertaking deliberate actions that would result in new or increased discharges of BCC's or new or increased permit limits for non-BCC's, or from allowing a new or increased discharge of a BCC from an existing or proposed industrial user, without first proving that the new or increased discharge would not result in a significant lowering of water quality, or by submission and approval of an antidegradation demonstration to the IDEM.

The tables below contain the proposed effluent limitations.

Outfall 002

Parameter	Monthly Average	Daily Maximum	Units
Flow	Report	Report	MGD
Oil and Grease	Report	Report	lbs/day (mg/l)
Total Suspended Solids	Report	Report	lbs/day (mg/l)
Total Residual Chlorine	1.5 (0.016)	3.5 (0.037)	lbs/day (mg/l)
Mercury			
Interim	Report	Report	lbs/day (ng/l)
Final	0.00012 (1.3)	0.00030 (3.2)	lbs/day (ng/l)
Temperature	Report	Report	°F
Thermal Discharge	Report	Report	MBTU/Hr.

Parameter	Daily Minimum	Daily Maximum	Units
pH	6.0	9.0	Std Units

ED_002857_00000137-00124

Outfall 009

Parameter	Monthly Average	Daily Maximum	Units
Flow	Report	Report	MGD
Oil and Grease	Report	Report	lbs/day (mg/l)
Total Suspended Solids	Report	Report	lbs/day (mg/l)
Ammonia	425	1000	lbs/day
Phenols	Report	11	lbs/day
Total Residual Chlorine	5.5 (0.012)	13 (0.028)	lbs/day (mg/l)
Zinc	Report	Report	lbs/day (ug/l)
Lead	Report	Report	lbs/day (ug/l)
Mercury			
Interim	Report	Report	lbs/day (ng/l)
Final	0.00060 (1.3)	0.0015 (3.2)	lbs/day (ng/l)
Temperature	Report	Report	°F
Thermal Discharge	Report	Report	MBTU/Hr.
Whole Effluent Toxicity Testing			See Part I.H

Parameter	Daily Minimum	Daily Maximum	Units
pH	6.0	9.0	Std Units

Internal Outfall 509

Parameter	Monthly Average	Daily Maximum	Units
Flow	Report	Report	MGD
Oil and Grease	38.1	114	lbs/day
Total Suspended Solids	736	2,213	lbs/day
Zinc	4.46	13.4	lbs/day
Lead	2.98	8.95	lbs/day
T. Cyanide	29.8	59.6	lbs/day
Ammonia, as N	Report	Report	lbs/day
2,3,7,8-TCDF	Report	<ML	lbs/day
Phenols	Report	Report	lbs/day

Outfall 010

Parameter	Monthly Average	Daily Maximum	Units
Flow	Report	Report	MGD
Oil and Grease	Report	Report	lbs/day (mg/l)
Total Suspended Solids	Report	Report	lbs/day (mg/l)
Ammonia	100	300	lbs/day
Phenols	Report	5	lbs/day
Total Residual Chlorine	3.7 (0.012)	8.6 (0.028)	lbs/day (mg/l)
Zinc	Report	Report	lbs/day (ug/l)
Lead	Report	Report	lbs/day (ug/l)
Mercury			
Interim	Report	Report	lbs/day (ng/l)
Final	0.00040 (1.3)	0.00098 (3.2)	lbs/day (ng/l)
Temperature	Report	Report	°F
Thermal Discharge	Report	Report	MBTU/Hr.

Parameter	Daily Minimum	Daily Maximum	Units
pH	6.0	9.0	Std Units

Outfall 011

Parameter	Monthly Average	Daily Maximum	Units
Flow	Report	Report	MGD
Oil and Grease	Report	Report	lbs/day (mg/l)
Total Suspended Solids	Report	Report	lbs/day (mg/l)
Ammonia	75	150	lbs/day
Phenols	Report	5	lbs/day
Total Residual Chlorine	2.5 (0.013)	5.9 (0.030)	lbs/day (mg/l)
Zinc	Report	Report	lbs/day (ug/l)
Lead	Report	Report	lbs/day (ug/l)
Mercury			
Interim	Report	Report	lbs/day (ng/l)
Final	0.00025 (1.3)	0.00062 (3.2)	lbs/day (ng/l)
Temperature	Report	Report	°F
Thermal Discharge	Report	Report	MBTU/Hr.
Whole Effluent Toxicity Testing			See Part I.H

Parameter	Daily Minimum	Daily Maximum	Units
pH	6.0	9.0	Std Units

Internal Outfall 701

Parameter	Monthly Average	Daily Maximum	Units
Flow	Report	Report	MGD
Total Suspended Solids	21.2[1]	59.4[1]	lbs/day
Zinc	0.382[1]	1.15[1]	lbs/day
Lead	0.255[1]	0.764[1]	lbs/day

[1] Effluent limitations are only applicable when the discharge does not get directed to the BOF and discharges through Internal Outfall 701.

Internal Outfall 702

Parameter	Monthly Average	Daily Maximum	Units
Flow	Report	Report	MGD
Total Suspended Solids	60.3[1]	169[1]	lbs/day
Oil and Grease	24.0[1]	72.4[1]	lbs/day
Zinc	1.08[1]	3.26[1]	lbs/day
Lead	0.724[1]	2.17[1]	lbs/day

[1] Effluent limitations are only applicable when the discharge does not get directed to the BOF and discharges through Internal Outfall 702.

ED_002857_00000137-00126

Outfall 012

Parameter	Monthly Average	Daily Maximum	Units
Flow	Report	Report	MGD
Oil and Grease	Report	Report	lbs/day (mg/l)
Total Suspended Solids	Report	Report	lbs/day (mg/l)
Lead	Report	Report	lbs/day (ug/l)
Zinc	76 (130)	150 (260)	lbs/day (ug/l)
Vanadium	13 (0.022)	26 (0.044)	lbs/day (mg/l)
Mercury	Report	Report	lbs/day (ng/l)
Ammonia, as N	Report	Report	lbs/day (mg/l)
Total Residual Chlorine	5.8 (0.010)	12 (0.020)	lbs/day (mg/l)
Whole Effluent Toxicity Testing			See Part I.H

Parameter	Daily Minimum	Daily Maximum	Units
pH	6.0	9.0	Std Units

Internal Outfall 111

Parameter	Monthly Average	Daily Maximum	Units
Flow	Report	Report	MGD
Total Suspended Solids	Report	Report	lbs/day
Oil and Grease	Report	Report	lbs/day

Internal Outfall 211

Parameter	Monthly Average	Daily Maximum	Units
Flow	Report	Report	MGD
Total Suspended Solids	Report	Report	lbs/day
Oil and Grease	Report	Report	lbs/day
Zinc	3.22	9.65	lbs/day
Lead	3.25	9.3	lbs/day
Naphthalene	-------	1.11	lbs/day
TCE	-------	1.68	lbs/day

Internal Outfall 411

Parameter	Monthly Average	Daily Maximum	Units
Flow	Report	Report	MGD
Total Suspended Solids	4381	11365	lbs/day
Oil and Grease	1048	3089	lbs/day

Parameter	Daily Minimum	Daily Maximum	Units
pH	6.0	9.0	Std Units

ED_002857_00000137-00127

6.2 Monitoring Conditions and Rationale

Outfall 002

Parameter	Minimum Frequency	Type of Sample
Flow	1/Week	24-hour total
Oil and Grease	1/Week	Grab
Total Suspended Solids	1/Week	24-hour composite
Total Residual Chlorine	5/Week	Grab
Free Cyanide	2/Month	Grab
Fluoride	2/Month	24-hour composite
Mercury	6/Year	Grab
Temperature	2/Week	Grab
Thermal Discharge	2/Week	Report
pH	1/Week	Grab

Outfall 009

Parameter	Minimum Frequency	Type of Sample
Flow	1/Week	24-hour total
Oil and Grease	1/Week	Grab
Total Suspended Solids	1/Week	24-hour composite
Free Cyanide	2/Month	Grab
Ammonia, as N	1/Week	24-hour composite
Phenols	1/Week	Grab
Total Residual Chlorine	5/Week	Grab
Zinc	1/Week	24-hour composite
Lead	1/Week	24-hour composite
Fluoride	2/Month	24-hour composite
Mercury	6/Year	Grab
Temperature	2/Week	Grab
Thermal Discharge	2/Week	Report
Whole Effluent Toxicity		See Part I.H
pH	1/Week	Grab

Internal Outfall 509

Parameter	Minimum Frequency	Type of Sample
Flow	2/Week	24-hour total
Oil and Grease	2/Week	Grab
Total Suspended Solids	2/Week	24-hour composite
Zinc	2/Week	24-hour composite
Lead	2/Week	24-hour composite
T. Cyanide	2/Week	Grab
Ammonia, as N	1/Week	24-hour composite
2,3,7,8-TCDF	1/Month	24-hour composite
Phenols	1/Week	Grab

ED_002857_00000137-00128

Outfall 010

Parameter	Minimum Frequency	Type of Sample
Flow	1/Week	24-hour total
Oil and Grease	1/Week	Grab
Total Suspended Solids	1/Week	24-hour composite
Free Cyanide	2/Month	Grab
Ammonia, as N	1/Week	24-hour composite
Phenols	1/Week	Grab
Total Residual Chlorine	5/Week	Grab
Zinc	1/Week	24-hour composite
Lead	1/Week	24-hour composite
Fluoride	2/Month	24-hour composite
Mercury	6/Year	Grab
Temperature	2/Week	Grab
Thermal Discharge	2/Week	Report
pH	1/Week	Grab

Outfall 011

Parameter	Minimum Frequency	Type of Sample
Flow	1/Week	24-hour total
Oil and Grease	1/Week	Grab
Total Suspended Solids	1/Week	24-hour composite
Free Cyanide	2/Month	Grab
Ammonia, as N	1/Week	24-hour composite
Phenols	1/Week	Grab
Total Residual Chlorine	5/Week	Grab
Zinc	1/Month	24-hour composite
Lead	1/Week	24-hour composite
Fluoride	2/Month	24-hour composite
Mercury	6/Year	Grab
Temperature	2/Week	Grab
Thermal Discharge	2/Week	Report
Whole Effluent Toxicity		See Part I.H
pH	1/Week	Grab

Internal Outfall 701

Parameter	Minimum Frequency[1]	Type of Sample
Flow	2/Week	24-hour total
Total Suspended Solids	2/Week	24-hour composite
Zinc	2/Week	24-hour composite
Lead	2/Week	24-hour composite

[1] Effluent monitoring is only applicable when the discharge does not get directed to the BOF and discharges through Internal Outfall 701.

Internal Outfall 702

Parameter	Minimum Frequency[1]	Type of Sample
Flow	2/Week	24-hour total
Oil and Grease	2/Week	Grab
Total Suspended Solids	2/Week	24-hour composite
Zinc	2/Week	24-hour composite
Lead	2/Week	24-hour composite

[1] Effluent monitoring is only applicable when the discharge does not get directed to the BOF and discharges through Internal Outfall 702.

Outfall 012

Parameter	Minimum Frequency	Type of Sample
Flow	1/Week	24-hour total
Oil and Grease	1/Week	Grab
Total Suspended Solids	1/Week	24-hour composite
Lead	1/Week	24-hour composite
Zinc	1/Week	24-hour composite
Vanadium	1/Week	24-hour composite
Ammonia, as N	1/Week	24-hour composite
Mercury	6/Year	Grab
Total Residual Chlorine	1/Day	Grab
Whole Effluent Toxicity		See Part I.H
pH	1/Week	Grab

Internal Outfall 111

Parameter	Minimum Frequency[1]	Type of Sample
Flow	2/Week	24-hour total
Oil and Grease	2/Week	Grab
Total Suspended Solids	2/Week	24-hour composite

[1] Samples taken for Outfalls 111 and 211 must be collected on the same day.

Internal Outfall 211

Parameter	Minimum Frequency[1]	Type of Sample
Flow	2/Week	24-hour total
Total Suspended Solids	2/Week	24-hour composite
Oil and Grease	2/Week	Grab
Zinc	2/Week	24-hour composite
Lead	2/Week	24-hour composite
Naphthalene	2/Week	Grab
TCE	2/Week	Grab

[1] Samples taken for Outfalls 111 and 211 must be collected on the same day.

ED_002857_00000137-00130

Internal Outfall 411

Parameter	Minimum Frequency[1]	Type of Sample
Flow	2/Week	24-hour total
Oil and Grease	2/Week	Grab
Total Suspended Solids	2/Week	24-hour composite

[1] Samples taken for Outfalls 111 and 211 must be collected on the same day.

6.3 Schedule of Compliance

A fifty-four (54) month Schedule of Compliance has been incorporated into this NPDES Permit for mercury.

6.4 Special Conditions

- 301(g) Variance Request

Section 301(g) of the Clean Water Act and 327 IAC 5-3-4(b)(2) allow for a variance from the applicable BAT requirements through the development of Proposed Modified Effluent Limitations (PMELs) for the non-conventional pollutants of ammonia, chlorine, color, iron, and total phenols (4AAP) provided the following conditions are met:

1. The proposed modified effluent limits (PMELs) will meet the categorical BPT effluent limits (Technology Based Effluent Limits) or applicable water quality based effluent limits (WQBEL), whichever are more stringent;

2. The PMELs will not result in any additional requirements on other point or non-point sources;

3. The PMELs will not interfere with the attainment or maintenance of water quality which will protect public water supplies, aquatic life, and recreational activities; and,

4. The PMELs will not result in the discharge of pollutants in quantities which may reasonably be anticipated to pose an unacceptable risk to human health or the environment because of bioaccumulation, persistency in the environment, acute toxicity, chronic toxicity (including carcinogenicity, mutagenicity, or teratogenicity, or synergistic properties).

During the previous permit cycle, this agency granted Section 301(g) variances for ammonia (as N) and phenols (4AAP) in the ironmaking and sintering process wastewaters. This request was identified as approved by U.S.EPA to this agency in a letter dated March 3, 1986. Therefore, the previous permit included net limits for ammonia (as N) and phenols (4AAP) at Outfalls 009, 010, and 011 since such wastewaters were discharged through each of those outfalls. The permittee was required to sample intake water at pumping stations 1 and 2 for ammonia and phenols at the same frequency as the discharge waters. Net values were calculated by subtracting the measured intake values from the measured effluent values.

In a letter dated August 24, 2007, the permittee identified the reconfiguration of wastestreams and, more specifically, the redirection of blast furnace/sinter plant wastestreams. The permittee stated that the Section 301(g) variance limits for ammonia and phenols should apply at the blast furnace/sinter plant internal outfall (proposed Internal Outfall 510 at the time) as gross limitations. This request was updated in a June 15, 2009, letter identifying PMELs for ammonia of 400 lbs/day monthly average and 1,000 lbs/day daily maximum and 10 lbs/day daily maximum for phenols at the internal outfall.

ED_002857_00000137-00131

Furthermore, in a letter dated December 20, 2010, the internal outfall was changed from Internal Outfall 510 to 509. Internal Outfall 509 is now the NPDES permit compliance monitoring station for process water discharges from the blast furnace and sinter plant. Outfall 509 discharges to Outfall 009 to the Indiana Harbor Ship Canal. After the new treatment plant for the blast furnaces and sinter plant was constructed and placed into operation, the ammonia limits initially requested in 2009 were not sufficient so an updated request was submitted dated May 10, 2011 requesting the entire 301 (g) limits as gross limits at internal outfall 509.

IDEM has reviewed the submittal from ArcelorMittal and, as a result of that review, determined that the net limit requirements for the three outfalls shall remain in the permit. The variance will assign specific net limits for ammonia (as N) and Phenols (4AAP) as before but since the sinter plant and blast furnace systems were removed from the Outfall 011 discharge and redirected to Outfall 009 the ammonia and phenol allocations have been rearranged but the total net limits will still apply across the three outfalls as before.

The categorical effluent limitation guidelines for ammonia (as N) and phenols (4AAP) which form the basis for the BPT and BAT effluent limits for discharges from Internal Outfall 509 are found at 40 CFR 420.32(a) and 420.33(a), respectively. The generally applicable BAT and BPT limits have been calculated and are presented in Table 1-301(g).

Table 1-301(g)
Nos. 5 & 6 Blast Furnaces
BPT, PMELs, BAT

	Ammonia-N (lbs/day)		Phenols (4AAP) (lbs/day)	
Limits (Outfall)	Monthly Avg	Daily Max	Monthly Avg	Daily Max
BPT	1128	3381	44	131
Current Variance Limits (net) Outfalls 009, 010, 011	600	1450	NA	21
PMELs (net) Outfalls 009, 010, 011	600	1450	NA	21
BAT	99	298	0.99	1.99

IDEM has reviewed ArcelorMittal Indiana Harbor West's request for the PMELs for ammonia (as N) and phenols (4AAP) based on the 301(g) variance continuance request dated June 15, 2009, and revised on May 10, 2011 in the context of Indiana's currently applicable water quality standards and IDEM's procedures for conducting wasteload allocations.

- Mercury

New mercury analytical and sampling methodology provide for limits of detection and quantification at levels below the water quality criterion, and the IDEM is requiring major NPDES dischargers to utilize these methodologies to determine if their discharges have reasonable potential to exceed the water quality criterion.

The NPDES permit requires that mercury sampling be conducted bi-monthly in the months of February, April, June, August, October, and December of each year for the term of the permit. This shall be achieved by either installing appropriate analytical facilities or by obtaining the services of a commercial laboratory.

- Pollutant Minimization Program

The permittee is required to develop and conduct a Pollutant Minimization Program (PMP) for TRC since the WQBEL is below the LOQ. The requirements for the PMP can be found in Part I.G of the permit.

- Thermal Requirements

Based on the results of instream sampling and a multi-discharger thermal model, the discharges from ArcelorMittal Indiana Harbor West Outfalls 002, 009, 010 and 011 do not have a reasonable potential to exceed a water quality criterion for temperature. Under 5-2-11.5(e), the commissioner may require monitoring for a pollutant of concern even if it is determined that a WQBEL is not required based on a reasonable potential determination. Thermal effluent requirements are being included in this permit to maintain compliance with Indiana Water Quality Standards.

The thermal discharge shall be calculated for Outfalls 002, 009, 010, and 011. Such discharge shall be limited and monitored by the permittee as specified below.

a. Flow and temperature values used in thermal discharge calculations shall be taken from the same day of monitoring.

b. The thermal discharge shall be computed as follows:

Thermal Discharge (MBTU/Hr.) = Q x (To – Ti) x 0.3477

where,

-MBTU/Hr. = million Btu/Hr.
Q = 24 hour discharge flow, MGD
To = effluent temperature, °F
Ti = influent temperature, °F
0.3477 = conversion factor

c. Temperature shall be monitored as follows at Outfalls 002, 009, 010, and 011:

DISCHARGE LIMITATIONS

	Quantity or Loading			Quality or Concentration			Monitoring Requirements	
Parameter	Monthly Average	Daily Maximum	Units	Monthly Average	Daily Maximum	Units	Measurement Frequency	Sample Type
Temperature								
Intake[2]	----	----	----	Report	Report	°F	2 X Week	Grab
Outfall[1]	----	----	----	Report	Report	°F	2 X Week	Grab

[1] Temperature at Outfalls 002, 009, 010, and 011 shall be sampled between the hours of 12 pm and 4 pm. As an alternative to direct grab measurements during this time period the facility may install a more permanent temperature measuring device that will retain the highest temperature value during any given 24 hour period.

ED_002857_00000137-00133

[2] On days when temperature is sampled at an outfall, temperature shall also be sampled at the intake supplying the most significant source of water to the outfall.

- 316(b)

Section 316(b) of the federal Clean Water Act requires that facilities minimize adverse environmental impact resulting from the operation of cooling water intake structures (CWIS) by using the "best technology available" (BTA). U.S. EPA has promulgated rules to implement these requirements for new facilities (Phase I rules), large, existing power plants (Phase II rules) which are currently remanded, and offshore oil and gas extraction facilities (Phase III rules), and that implementation must take place through the issuance of NPDES permits. However, there is a large universe of facilities which are not specifically addressed by the rules, including:

- New facilities with a CWIS design flow less than 2 MGD;
- Existing power plants with a CWIS design flow less than 50 MGD; and
- Manufacturing facilities such as existing steel mills, paper mills, etc. with a surface water intake that use at least a portion of their intake flow for cooling purposes.

U.S. EPA has recently emphasized that all of these facilities, including those not specifically addressed by rules must be evaluated for 316(b) compliance. 40 C.F.R. §125.90(b) directs permitting authorities to establish 316(b) requirements on a best professional judgment (BPJ) basis for existing facilities not subject to categorical section 316(b) regulations (Phase I, II (currently remanded) or III rules. IDEM is required to make a BTA determination using BPJ so the permit will comply with the federal regulation.

ArcelorMittal submitted documentation on the design and operation of the CWISs at the Indiana Harbor West facility in November 2008 and updated in February 2011. ArcelorMittal West has five (5) active pumping stations. The intake structures for Indiana Harbor West are identified as the No. 1 Pump House, the No.2 Pump House, Low Head Pump House, Power House Pump House, and the No. 3 Pump House.

The following is a summary of information regarding the CWISs submitted by the permittee for this facility.

<u>No. 1 Pump House</u>

- Indiana Harbor and Ship Canal is the source water.
- The No. 1 Pump House is located in the interior of the Plant at the terminus of a narrow intake canal approximately 1,000 ft long and 7 ft wide. The pump house was constructed in 1939 to provide cooling water and process make-up water to the No. 3 and 4 Blast Furnaces. The pump house was initially designed to contain six service pumps of various capacities. Since then the pumps have been replaced and two removed entirely.
- Currently, only two pumps are operational.
- 49 MGD effective design intake capacity.
- Four vertical traveling screens (single entry/exit) in a common wet well. Two screens have been retrofitted to function in a fixed panel mode utilizing No. 0.51 diamond-shaped, flattened-expanded aluminum mesh. Of the remaining two vertical traveling screens, one has been removed and screen opening blocked. The other is fitted with 0.50" stainless steel square-mesh screening.
- 0.42 ft/s velocity under normal operating conditions as calculated by the permittee.

- 0.86 ft/s total rated capacity velocity as calculated by the permittee.
- Fixed screens are manually removed and washed as needed. The traveling screen includes a wash system used to remove impinged debris and/or fish, which are washed into one of two collection baskets. Collection basket contents are returned manually discarded.

No. 2 Pump House

- Lake Michigan is the source water.
- The No. 2 Pump House is located at the terminus of an intake canal approximately 1.2 miles long and 70 feet wide, opening to 300 feet at the entrance to the pump house forebay. The No. 2 Pump House was originally designed with three circulating pumps and two service pumps.
- Currently, only two circulating pumps and one service pump is in operation.
- 87 MGD flow based on current and fixed pump configuration and operation.
- Centralized Screen House that serves the No. 2 Pump House, Low Head Pump House, and Power House Pump House. The only potential for entrainment and/or impingement as a result of operation of the No. 2 Pump House is at the Centralized Screen House.
- Three vertical traveling screens (single entry/exit) in a common wet well with 0.35" stainless steel square-mesh screening and two fixed panel screens utilizing No. 0.51 diamond-shaped, flattened-expanded aluminum mesh.
- 1.66 ft/s velocity under normal operating conditions as calculated by the permittee.
- 2.66 ft/s total rated capacity velocity as calculated by the permittee.
- Fixed screens are manually removed and washed as needed. Traveling screens include a wash system used to remove impinged debris and/or fish, which are washed into a common collection basket. The collection basket contents are returned manually discarded.

Low Head Pump House

- After passing through screens in the Common Screen House, water is directed via vertical shaft to a deep tunnel approximately 3,137 feet to the Low Head Pump Station. The only potential for entrainment and/or impingement as a result of operation of the Low Head Pump House is at the Centralized Screen House.
- Currently, there are two operable pumps.
- Approximately 101 MGD flow based on current pump configuration and operation.

Power House Pump House

- After passing through screens in the Common Screen House, non-contact cooling water for the Power House is drawn directly from the deep tunnel. The only potential for entrainment and/or impingement as a result of operation of the Power House Pump House is at the Centralized Screen House.
- Currently, there are ten operable pumps.
- Approximately 117 MGD flow based on current pump configuration and operation.

ED_002857_00000137-00135

No. 3 Pump House

- Lake Michigan is the source water.
- The No. 3 Pump House is located in the northeast portion of the facility and withdrawals water from the same intake canal as the No. 2 Pump House. The No. 3 Pump House was originally designed for eight pumps but only four were installed and provides cooling water to the No. 3 Cold Strip Mill and the 84-inch Hot Strip Mill via four pumps.
- Currently, there are operable pumps but only two are used during normal operations.
- 144 MGD flow based on current pump configuration during normal operations.
- Six vertical traveling screens (single entry/exit) in a common wet well with most utilizing a 1/8" stainless steel woven-mesh screening and the rest with standard 3/8" mesh. Four of the six screens are currently operated.
- 0.30 ft/s velocity under normal operating conditions as calculated by the permittee.
- 1.33 ft/s total rated capacity velocity as calculated by the permittee.
- The traveling screens are designed with individual wash systems used to remove impinged debris and/or fish, which are washed into a common collection trough.

Based on an evaluation of the documents and information provided by the ArcelorMittal Indiana Harbor West facility, IDEM has made a BTA determination that the existing CWIS is BTA based on BPJ for the following reasons:

a. There has been a substantial reduction in water intake demand;
b. Fewer pumps are currently used; and
c. An effective increase in screen surface area due to the use of fewer pumps.

ArcelorMittal West is being required to conduct studies during this permit cycle to further characterize the nature and extent of the environmental impacts, if any, from the CWISs in a scientifically valid manner. Impingement and entrainment have been determined to be appropriate measures for determining whether adverse environmental impacts have been minimized. The permit contains monitoring conditions and reporting requirements to ensure operation of all intakes in a manner that will minimize adverse environmental impact as outlined in Part IV of the permit.

The centralized screen house is the point at which water drawn by the No. 2, Low Head, and Power House Pump Houses passes through screens and is the potential point of impingement for the three pump houses. It is also the location of highest through-screen velocity at the facility. Therefore, the studies required in Part IV of the permit will be performed at the centralized screen house. This approach will analyze a 'worst-case' scenario in relationship to intake velocity and fish entrainment/impingement. It should be noted that any changes required as a result of a study's finding must be applied to *all* CWISs at the facility. This determination will be reassessed at the next permit reissuance to ensure that the CWIS continues to meet the requirements of Section 316(b) of the federal Clean Water Act (33 U.S.C. section 1326).

In accordance with 327 IAC 2-1.5-8 the permit proposes that the ArcelorMittal West CWISs must be designed and located to minimize entrainment and damage to desirable organisms. In general, the intake structure shall have minimum water velocity and shall not be located in spawning or nursery areas of important fishes. Water velocity at screens and other exclusion

devices shall also be at a minimum. The specific requirements pertaining to the intake structures are contained in Part IV of the proposed NPDES Permit.

The following are additional requirements pertaining to CWISs:

a. CHANGES DURING TERM OF PERMIT

ArcelorMittal shall provide advance notice to IDEM of any proposed changes to the CWISs or proposed changes to operations at the facility that affect the information taken into account in the current BTA evaluation.

b. INTAKE SCREEN WASH

The discharge of Intake Screen Backwash shall meet the Narrative Water Quality Standards contained in Part I.B. of the permit.

c. FISH RETURN EVALUATION

Fish returns shall be evaluated for all intakes to determine if they minimize fish mortality. The permittee shall submit to IDEM an evaluation of options to minimize fish mortality within one year from the effective date of the permit. This evaluation should include time frames to implement these measures. The permittee will implement any options that IDEM identifies as BTA after the information becomes available.

6.5 Spill Response and Reporting Requirement

Reporting requirements associated with the Spill Reporting, Containment, and Response requirements of 327 IAC 2-6.1 are included in Part II.B.2.c. and Part II.C.3. of the NPDES permit. Spills from the permitted facility meeting the definition of a spill under 327 IAC 2-6.1-4(15), the applicability requirements of 327 IAC 2-6.1-1, and the Reportable Spills requirements of 327 IAC 2-6.1-5 (other than those meeting an exclusion under 327 IAC 2-6.1-3 or the criteria outlined below) are subject to the Reporting Responsibilities of 327 IAC 2-6.1-7.

It should be noted that the reporting requirements of 327 IAC 2-6.1 do not apply to those discharges or exceedances that are under the jurisdiction of an applicable permit when the substance in question is covered by the permit and death or acute injury or illness to animals or humans does not occur. In order for a discharge or exceedance to be under the jurisdiction of this NPDES permit, the substance in question (a) must have been discharged in the normal course of operation from an outfall listed in this permit, and (b) must have been discharged from an outfall for which the permittee has authorization to discharge that substance.

6.6 Permit Processing/Public Comment

Pursuant to IC 13-15-5-1, the draft NPDES permit for the ArcelorMittal Indiana Harbor, LLC – Indiana Harbor West was made available for public comment from August 15, 2011, through September 30, 2011, as part of Public Notice No. 2011-8F-RD/PH. In addition, a public hearing was held in Gary, Indiana, on September 15, 2011. During the comment period and at the public hearing, comments were received concerning the draft permit. Comments received at the hearing and/or submitted via email, and this Office's corresponding responses, are summarized below. Any changes to the permit and/or fact sheet are so noted below.

Mr. Kevin Doyle, Environmental Manager, ArcelorMittal USA LLC submitted the following comments

ED_002857_00000137-00137

Comment 1: **WATER QUALITY-BASED EFFLUENT LIMITS (WQBELs)**
ArcelorMittal understands that IDEM used the procedures at 327 IAC 5-2-11.4 and 11.6 to calculate Water Quality Based Effluent Limits for ArcelorMittal outfalls discharging to the Indiana Harbor Ship Canal (IHSC) and constructed a multi-discharger Waste Load Allocation model to ensure that water quality standards are maintained throughout the IHSC and as the IHSC meets Lake Michigan.

IDEM failed to use readily available, reliable site-specific data as part of the Waste Load Allocation model development and this can significantly impact calculation of the WQBELs. Specifically, IDEM failed to use background water-quality data at Dickey Road, and site-specific dissolved and total metals data for calculation of site-specific dissolved metals translators (DMTs). All of these data have historically been collected by IDEM and the failure to use current, scientifically sound site-specific data is unexplainable. Further discussion is presented below.

Background Water Quality
In its water quality assessment and development of WQBELs, IDEM determined background water quality using the cumulative allocated loadings from the upstream outfalls in the applicable study area. This is an overly conservative approach that ignores more than ten years of actual in-stream data. Those data reflect the cumulative and collective discharges of all dischargers upstream of Dickey Road. Actual in-stream data for the IHSC were developed by IDEM and are available for the IHC-2 monitoring station at Dickey Road. These data can be used to re-establish background water quality for the ArcelorMittal Indiana Harbor permits based on actual conditions. These data were summarized by ArcelorMittal and previously presented to IDEM.[1] Unexplainably, IDEM did not use these data to establish background water quality for the draft Indiana Harbor permits. Instead, IDEM used the cumulative allocated loadings upstream of this location to determine background water quality for the stream segment downstream of Dickey Road. This approach is impractical because it is not realistic to presume that all upstream dischargers would be discharging at or near their permitted mass loadings simultaneously. Using the actual in-stream data is more appropriate because the data represent actual conditions instead of projected concentrations based upon the presumption of discharges at allocated loadings. IDEM's choice not to use Dickey Road data to establish background concentrations is confusing in light of its comments contained in the supplemental documentation supporting the WLA analysis for the ArcelorMittal Indiana Harbor permits:

> *"Developing background concentrations based on actual instream data is consistent with the regulations and accounts for the wastewater treatment that is occurring upstream of the subwatershed. Otherwise, overly conservative requirements can be placed on downstream dischargers." (pg 17)*

These comments appear to demonstrate that IDEM not only supports, but prefers, the use of actual instream data to establish background water quality, where available. Accordingly, the Dickey Road data must be used to 're-establish' background water quality at the appropriate location in the IHSC for IDEM's water quality assessment and calculation of WQBELs. A comparison of the

concentrations used by IDEM at Dickey Road and the actual IHSC concentrations at Dickey Road are presented below for fluoride, lead and zinc.

Comparison of IDEM Predicted Concentrations at Dickey Road to Actual Concentrations		
	IDEM Predicted Concentration at Dickey Road	Actual Concentration at Dickey Road*
Fluoride, mg/l	0.63	0.49
Lead, Total, ug/l	8.5	4.0
Zinc, Total, ug/l	36	25
* Geometric mean of IHC-2 fixed monitoring station data January 2005 to December 2009		

Using Dickey Road data as background concentrations leads to significantly less stringent preliminary WQBELs for lead and zinc. ArcelorMittal's requested effluent limits based on the Dickey Road background data, and other factors, are presented throughout these comments.

Dissolved Metals Translators

Total and dissolved data for copper, lead and zinc collected by IDEM from the Indiana Harbor Ship Canal at fixed monitoring stations IHC-2 (Dickey Road) and IHC-0 should be used to calculate site-specific dissolved metals translators (DMTs). These DMTs should be used in the calculation of preliminary water-quality based effluent limits for the Central Treatment Plant (CTP) Outfall 001, and Indiana Harbor East Outfall 014. Data collected by IDEM over a period of several years for these metals demonstrate that the majority of the copper, lead and zinc present is associated with particulate in the water column and is not in the dissolved form. Dissolved metals more closely approximate the bioavailable fraction in the water column than do total or total recoverable metals. Consequently, use of site-specific DMTs is well suited for the IHSC. The Dickey Road fixed monitoring station, located downstream of CTP Outfall 001, serves as an appropriate data set for calculating DMTs for development of WQBELs for CTP Outfall 001. IDEM should consider the Dickey Road data representative of conditions in the IHSC and reliable because IDEM used the lead and zinc data collected at Dickey Road for another purpose in the NPDES permit renewal process for the ArcelorMittal facilities (*i.e.,* Dickey Road data were use to project the effluent quality from Indiana Harbor West Outfall 007 in IDEM's multi-discharger WLA). The IHC-0 fixed monitoring station is located downstream of Indiana Harbor East Outfall 014.

Per EPA guidance[2], DMTs can be calculated as the dissolved to total metal fraction, and can be calculated from a correlation of the dissolved fraction to receiving stream TSS concentration. Following that guidance, DMTs for copper, lead and zinc were calculated from the Dickey Road and IHC-0 data and are summarized below. The dissolved and total metals data used in the DMT calculations are attached (see Attachment IHC-1). For comparison, IDEM's default translators that were used in the development of the proposed permit limits, and DMT's calculated from data collected by IDEM at fixed Station IHC-3S are also shown.

Comparison of Indiana Harbor Ship Canal Dissolved Metal Fractions to IDEM Default Translators

	IHC-3S (Columbus Drive)	IDEM Default Translators for IHLC and CTP	IHC-2 (Dickey Road)	IDEM Default Translators for IH East 014 and 018	IHC-0
	1/04 to 6/09	NA	1/04 to 1/08	NA	1/04 to 10/06
Copper					
N	47	0	37	0	30
Geometric Mean	0.358		0.457		0.499
DMT by TSS Regression (TSS = 4 mg/l)	0.493	0.960	NA	0.960	0.574
95th Percentile	0.716		0.629		0.743
Lead					
N	48	0	38	0	31
Geometric Mean	0.176		0.228		0.374
DMT by TSS Regression (TSS = 4 mg/l)	0.268	0.686	NA	0.707	0.447
95th Percentile	0.472		0.415		0.645
Zinc					
N	47	0	37	0	30
Geometric Mean	0.332		0.375		0.462
DMT by TSS Regression (TSS = 4 mg/l)	0.432	0.978	NA	0.978	0.544
95th Percentile	0.635		0.574		0.774

IDEM's default DMTs, which rely on no data specific to the IHSC, are clearly inaccurate for the ArcelorMittal permits and overestimate the dissolved copper, lead and zinc fractions in the IHSC by significant amounts. For example, the default translators are 2.1, 3.0 and 2.6 times greater than the calculated geometric mean of the dissolved fractions for copper, lead and zinc, respectively, at IHC-2. Even the 95th percentiles of the dissolved fractions for all metals at all locations are significantly below IDEM's default translators. As shown, the DMTs calculated at IHC-3S, IHC-2 and IHC-0 are considerably lower than IDEM's default DMTs used in the calculation of WQBELs. Graphs of the geometric mean dissolved fractions, TSS-regression developed DMTs, and IDEMs default DMTs are presented below.

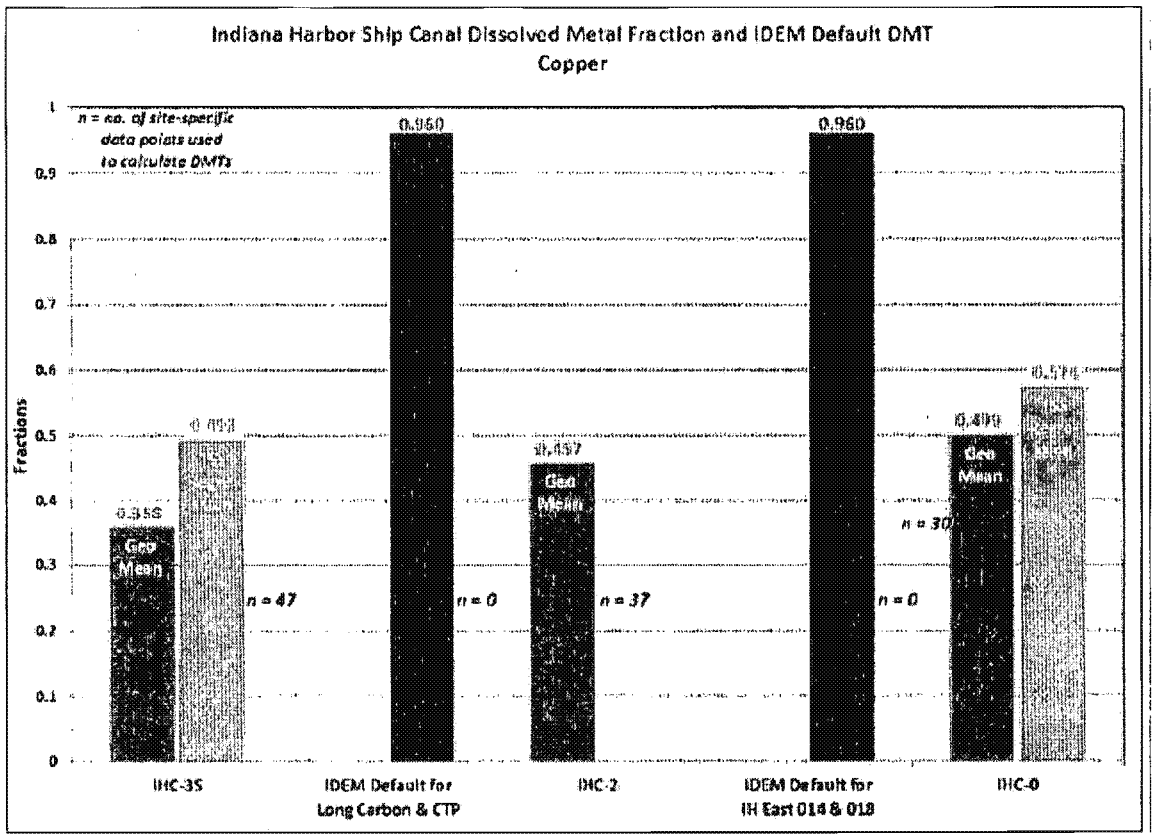
Indiana Harbor Ship Canal Dissolved Metal Fraction and IDEM Default DMT
Copper
n = no. of site-specific data points used to calculate DMTs
Fractions
0.960
0.960
0.457
0.499
0.576
Geo Mean
Geo Mean
Geo Mean
n = 47
n = 0
n = 37
n = 0
n = 30
IHC-3S
IDEM Default for Long Carbon & CTP
IHC-2
IDEM Default for IH East 014 & 018
IHC-0

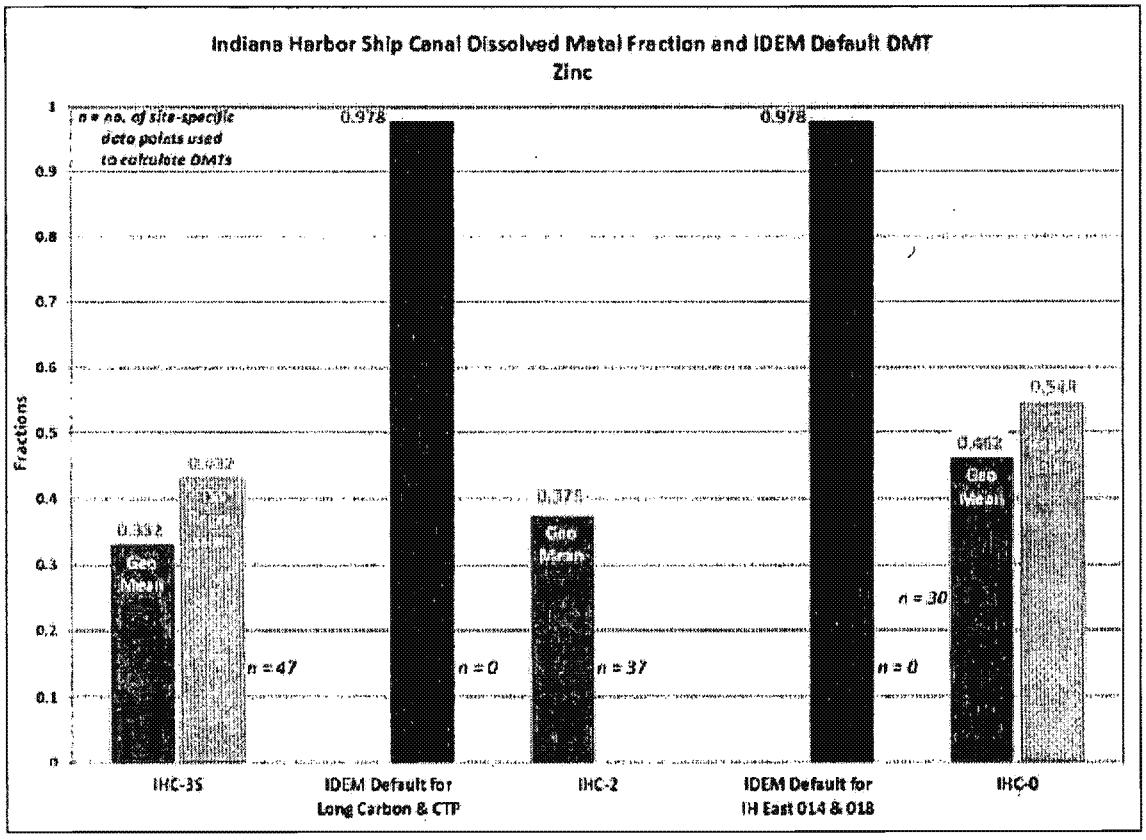
Indiana Harbor Ship Canal Dissolved Metal Fraction and IDEM Default DMT
Zinc
n = no. of site-specific data points used to calculate DMTs
Fractions
0.978
0.978
0.332
0.432
0.375
0.462
0.548
Geo Mean
Geo Mean
Geo Mean
n = 47
n = 0
n = 37
n = 0
n = 30
IHC-3S
IDEM Default for Long Carbon & CTP
IHC-2
IDEM Default for IH East 014 & 018
IHC-0

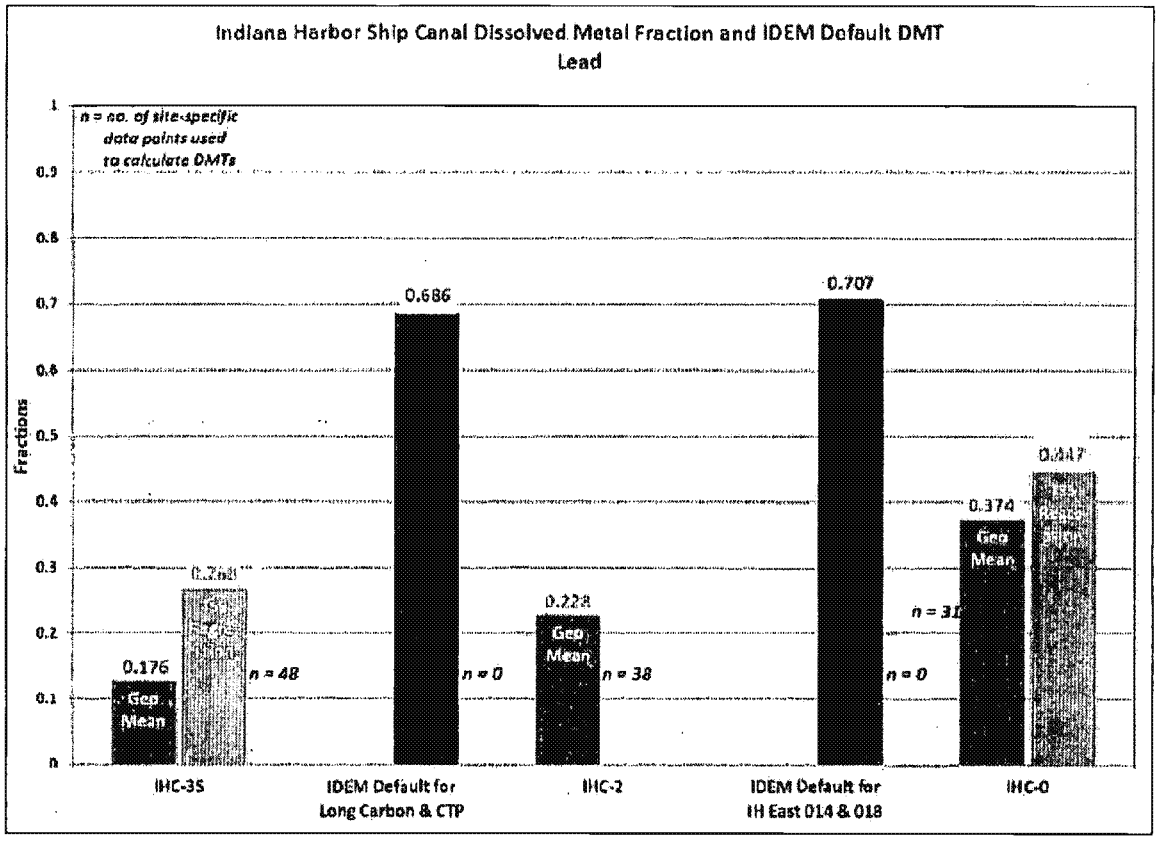

Given the data presented in the table and graphs above, it is not reasonable to assume, as IDEM has done through use of the default DMTs, that the dissolved metal fraction in the water column somehow increases dramatically in between the fixed monitoring stations. ArcelorMittal's requested effluent limits, based upon site-specific DMTs derived from the IDEM fixed monitoring station data and other factors, are presented below.

ArcelorMittal Requested Effluent Limits for IH Central Treatment Plant (Copper, Lead and Zinc)								
	Requested Outfall 001 Permit Limits				Requested Outfall 101 Permit Limits			
	Concentration (ug/l)		Mass (lbs/day)		Concentration (ug/l)		Mass (lbs/day)	
Pollutant	Monthly Average	Daily Max.	Monthly Average	Daily Max.	Monthly Average	Daily Max.	Monthly Average	Daily Max.
Copper	47	81	2.5	4.4	Report only	Report Only	Report Only	Report Only
Lead	Report Only	Report Only	Report Only	Report Only	Report Only	Report Only	9.4	19
Zinc	360	720	20	39	Report Only	Report Only	Report Only	Report Only

ArcelorMittal Requested Effluent Limits for IH East Outfall 014 (Lead and Zinc)				
	Requested Outfall 014 Permit Limits			
	Concentration (ug/l)		Mass (lbs/day)	
Pollutant	Monthly Average	Daily Max.	Monthly Average	Daily Max.
Lead	120	240	11.5	23
Zinc	Report only	Report Only	14.91	44.69

Comments on Multi-discharger Wasteload Allocation Model

IDEM constructed a multi-discharger wasteload allocation model for ammonia, total residual chlorine, fluoride, sulfate, lead and zinc to ensure that water quality standards are maintained throughout the IHSC and as the IHSC meets Lake Michigan. Comments specific to lead, zinc and fluoride are presented below.

Lead and Zinc

At the 'end' of IDEM's multi-discharger WLA model (i.e., the end of the IHSC and the beginning of Lake Michigan) IDEM shows a lead concentration of 9.9 ug/l, which is essentially equivalent to the chronic aquatic life water quality criterion. This 'end-result' creates the false impression that essentially all assimilative capacity in the IHSC has been consumed. Using more reasonable projected loadings from outfalls at which no WQBELs are warranted in conjunction with "re-establishing" background water quality at Dickey Road and accounting for the requested effluent limits throughout these comments shows that assimilative capacity remains in the IHSC, even when making the unrealistic assumption that all dischargers downstream of Dickey Road are simultaneously discharging at their maximum permitted levels. It is important that IDEM recognize this fact going forward, to avoid the false impression that essentially all assimilative capacity for lead in the IHSC has been consumed. This position could make future permitting of new discharges or expansion at existing dischargers a more difficult task than necessary.

In addition, IDEM significantly overestimated the pollutant loadings from certain ArcelorMittal outfalls in its multi-discharger WLA model. We understand that a WLA for an outfall derived from preliminary effluent limits serves as the input to the model to ensure that water quality standards are maintained. However, where no WQBEL exists, or where none is warranted, IDEM has overestimated pollutant loadings.

For Indiana Harbor Long Carbon, where the draft permit contains no WQBELs for lead and zinc, IDEM estimated discharges of 1.68 lbs/day of lead and 2.94 lbs/day of zinc based upon its default projected effluent quality (PEQ) procedure. However, implementing the projected effluent quality (PEQ) procedures at 327 IAC 5-2-11.5(b)(1)(B)(V), and considering the technology-based effluent limits at Outfall 602, allows for model input wasteload allocation discharges of 0.42

ED_002857_00000137-00143

lbs/day lead and 1.38 lbs/day zinc. These wasteload allocations result in preliminary effluent limits which are greater than the PEQs derived from 327 IAC 5-2-11.5(b)(1)(B)(V), and the Outfall 602 TBELs, and therefore adequately characterize the discharge from Indiana Harbor Long Carbon Outfall 001.

For Indiana Harbor East Outfall 018, IDEM estimated discharges of 6.24 lbs/day of lead based upon WQBELs derived pursuant to 327 IAC 5-2-11.4 and 11.6. However, as stated elsewhere in these comments, there is no reasonable potential to exceed these limits, and they should not be included in the renewal NPDES permit. Implementing the projected effluent quality (PEQ) procedures at 327 IAC 5-2-11.5(b)(1)(B)(V), and considering the technology-based effluent limits at Outfalls 518 and 618, allows a model input discharge of 5.31 lbs/day lead. This wasteload allocation results in preliminary effluent limits of 4.3 lbs/day (monthly average) and 9.0 lbs/day (daily maximum) lead. These values are greater than the PEQs derived from 327 IAC 5-2-11.5(b)(1)(B)(V) and the sum of the Outfall 518 and 618 TBELs, and therefore adequately characterize the discharge from Indiana Harbor East Outfall 018.

Printouts of IDEM's multi-discharger WLA model for lead and zinc that was modified to include Dickey Road data as background, the more accurate discharges from Indiana Harbor Long Carbon Outfall 001 and Indiana Harbor East Outfall 018, and ArcelorMittal's requested effluent limits are attached (see Attachment IHC-2). The results show remaining assimilative capacity throughout the IHSC and at Lake Michigan for lead and zinc.

Fluoride
IDEM made the same general errors for fluoride in its multi-discharger WLA model, as it did for lead and zinc. Namely, the discharges from certain ArcelorMittal outfalls are overestimated and IDEM did not 'reestablish" background fluoride concentrations at Dickey Road. A simplified mass balance accounting for Dickey Road data and discharges from Indiana Harbor East and West is presented in other comments. The results show minimal effect on the concentration of fluoride where the IHSC meets Lake Michigan.

[1] *Grand Calumet River, Indiana Harbor Water Quality Assessment, Lake Michigan Potable Intake Water Quality and Potential Impacts of ArcelorMittal Indiana Harbor East and West Plants.* Prepared for ArcelorMittal USA, Environmental Affairs, Richfield, Ohio, prepared by Amendola Engineering, Inc., Lakewood, Ohio. June 6, 2008, Water Quality Update April 2, 2009.
[2] *The Metals Translator: Guidance for Calculating a Total Recoverable Permit Limit From a Dissolved Criterion, USEPA, June 1996*

Response 1: **Water Quality-Based Effluent Limitations**

Background Water Quality

An explanation of the development of wasteload allocations including the calculation of background concentrations is included in the Fact Sheet of each permit. IDEM has historically developed wasteload allocations in the Grand Calumet River watershed by assigning wasteload allocations to point source discharges and using these wasteload allocations in the calculation of background concentrations for downstream dischargers. In the current modeling effort, IDEM decided to divide the Grand Calumet River watershed into three subwatersheds for the development of wasteload allocations. The ArcelorMittal

discharges are located in the Indiana Harbor Canal/Lake George Canal/Indiana Harbor subwatershed which has as its headwaters the combined flow of the East Branch and West Branch subwatersheds. The background concentrations for the Indiana Harbor Canal/Lake George Canal/Indiana Harbor subwatershed were not based on the accumulated wasteload allocations of the East Branch and West Branch subwatershed discharges, but were re-established using data collected at IDEM fixed station IHC-3S on the Indiana Harbor Canal at Columbus Avenue which is upstream of all point source discharges in the subwatershed. The Indiana Harbor Canal is subject to reverse flows as documented by U.S. Geological Survey (USGS) stream flow gage 04092750 at Canal Street. IDEM fixed station IHC-2 at Dickey Road is located about 0.6 miles downstream of the USGS gage at Canal Street and is more susceptible to reverse flows and dilution by Lake Michigan waters than IDEM fixed station IHC-3S which is located about 0.7 miles upstream of Canal Street. Under 327 IAC 5-2-11.4(a)(8), IDEM is required to use best professional judgment when determining what available data are acceptable for determining background. IDEM does not believe that it is acceptable to use data collected at fixed station IHC-2 to re-establish the background concentration at Dickey Road due to the documented reverse flows at Canal Street and the potential for samples collected at fixed station IHC-2 to be of downstream waters flowing upstream.

Dissolved Metals Translators

Indiana regulation under 327 IAC 5-2-11.4(c)(8) specifies the procedure for calculating wasteload allocations for metals with aquatic life criteria expressed in the form of dissolved metal. Under this regulation, unless a site-specific metals translator is developed, the metals translator is set equal to the default metals translator listed in the rule which is the criteria conversion factor used to derive the dissolved metal criterion. Default metals translators are established in this regulation for copper and zinc which also have aquatic life criteria established under 327 IAC 2-1.5-8. Default metals translators for lead are not established under 5-2-11.4(a)(8) because aquatic life criteria for lead were derived using the methodologies under 2-1.5-11 after 2-1.5-8 was promulgated. To be consistent with 5-2-11.4(c)(8), IDEM also applied the criteria conversion factor as the default metals translator for lead. Under 5-2-11.4(c)(8), a discharger may request the use of an alternate metals translator using site-specific data. The discharger must conduct a site-specific study to identify the ratio of the dissolved fraction to the total recoverable fraction outside the mixing zone and submit the study to IDEM to determine if it is acceptable. ArcelorMittal did request in letters dated June 6, 2011 and June 28, 2011 that IDEM use dissolved and total recoverable data collected by IDEM at Dickey Road (fixed station IHC-2) to develop metals translators for lead and zinc. However, a site-specific study conducted by ArcelorMittal was not submitted prior to the public notice of the draft permit. In their comments on the draft permit, ArcelorMittal submitted summarized total recoverable and dissolved metal data collected at IDEM fixed stations IHC-2 and IHC-0 for copper, lead and zinc along with metals translators calculated using the data. IDEM fixed station IHC-0 is in the vicinity of ArcelorMittal West Outfall 011 and may be within the mixing zone of this outfall which would make data collected at this location unacceptable for developing a metals translator under 5-2-11.4(c)(8). IDEM data collected at fixed station IHC-2 may be acceptable for developing metals translators and could be utilized as part of a site-specific study. Regardless, IDEM did not receive a site-specific study from ArcelorMittal

and proceeded to calculate wasteload allocations for copper, lead and zinc using default metals translators as required under 5-2-11.4(a)(8).

Multi-discharger Wasteload Allocation Model:

Lead and Zinc

Lake Michigan water quality criteria must be met at the interface of the Indiana Harbor and Lake Michigan. Therefore, wasteload allocations for discharges in the Indiana Harbor Canal/Lake George Canal/ Indiana Harbor subwatershed must be allocated in a manner to ensure that Lake Michigan criteria are met at the end of the subwatershed. The multi-discharger model provides a means to ensure that Lake Michigan criteria are met during critical stream conditions for conservative pollutants. The model can be refined in the future based on revised outfall allocations, discharge flows and background concentrations. If a site-specific metals translator study is conducted and approved, it may be possible to increase the water quality targets (the applicable dissolved metal criteria divided by the metals translator) for lead and zinc in the subwatershed and in Lake Michigan, providing more assimilative capacity.

As noted in a prior response, IDEM does not believe it is acceptable to re-establish background at Dickey Road and has not received a site-specific metals translator study so the current multi-discharger model was not revised. IDEM did look at the impact of lowering the ArcelorMittal Long Carbon allocation, as requested, and did not find a significant impact on the calculation of downstream WQBELs. For future wasteload allocation considerations, a site-specific metals translator along with more refined effluent concentration characteristics will provide the greatest means of showing that more assimilative capacity is available than currently modeled.

Comment 2: **COMPLIANCE SCHEDULES FOR NEW WATER QUALITY-BASED EFFLUENT LIMITS**

The draft NPDES permits for each of ArcelorMittal's Indiana Harbor plants contain new water quality based effluent limits for mercury and other pollutants. There are only limited available intake and effluent data that suggest the intake and effluent concentrations at each facility are within the same range, meaning process wastewater and non-cooling water discharges may not be sources or not significant sources of these pollutants. In addition, additional monitoring in all cases is required in order to capture the variability in discharges of these pollutants in order to evaluate compliance with the proposed limits. As a result, ArcelorMittal requests 54-month compliance schedules for every new WQBEL in each permit. This will provide sufficient time to develop statistically significant databases, determine if there are any controllable sources and implement best management practices or other control strategies. ArcelorMittal requests that the 54-month compliance schedule provisions included in the ArcelorMittal Burns Harbor NPDES Permit (No. IN0000175) be used as a guide. We believe the limited available intake and effluent data for these facilities are not sufficient to establish WQBELs, to determine that the Indiana Harbor facilities are actual sources, or to advise facility management on whether the proposed new WQBELs can be achieved on a consistent basis. If one or more outfalls are determined to not be in compliance with one or more of the new WQBELs, then a 54-month compliance schedule will be necessary to evaluate potential options to address the source(s).

ED_002857_00000137-00146

Response 2: For each pollutant receiving TBELs at an internal outfall, and for which water quality criteria or values exist or can be developed, concentration and corresponding mass-based WQBELs were calculated at the corresponding final outfall. The WQBELs were set equal to the applicable PELs from the multi-discharger model or the outfall specific spreadsheet. The mass-based WQBELs were then compared to the calculated mass-based TBELs. If the mass-based TBELs exceed the mass-based WQBELs at the final outfall, the pollutant may be discharged at a level that will cause an excursion above a numeric water quality criterion or value under 2-1.5 and WQBELs are required for that pollutant at the final outfall. Except for mercury, this was the case for each WQBEL applied at a final outfall. Therefore, WQBELs are required for these pollutants regardless of the results of the reasonable potential statistical procedure. However, the results of the reasonable potential statistical procedure were used to help establish the monitoring frequency.

Using the EPA memo dated May 10, 2007 on Compliance Schedules for Water Quality Based Effluent Limits in NPDES Permits as guidance, in order to grant a compliance schedule in an NPDES permit, the permitting authority has to make a reasonable finding, adequately supported by the administrative record, that the discharger cannot immediately comply with the WQBEL upon the effective date of the permit [40 CFR § 122.47, 122.47(a)(1)]. In considering ArcelorMittal's request, IDEM reviewed previously submitted data for the new water quality based effluent limits, RPE analyses, and internal technology based effluent limits as noted above. Based on that review, it was determined that in instances where the permittee appears to be capable of meeting new water quality based effluent limits upon permit issuance, the permittee is not eligible for schedules of compliance for those parameters at that outfall.

Comment 3: **MONITORING WAIVERS NAPHTHALENE AND TETRACHLOROETHYLENE**

The draft NPDES permits for Indiana Harbor West (Outfall 211, p. 19 of 77) and Indiana Harbor Central Treatment Plant (Outfall 101, p. 6 of 59) contain the following footnote regarding ArcelorMittal's request for monitoring waivers for naphthalene and tetrachloroethylene under 40 CFR §122.44(a)(2):

> *At the end of a twelve month sampling period, the permittee may request in writing, a review of these monitoring requirements. Upon review by IDEM, the permit may be modified, after public notice and for hearing, to reduce or delete the monitoring requirements.*

ArcelorMittal requests the respective footnotes for Indiana Harbor West and Indiana Central Treatment Plant be modified as follows, and that the following footnote be added for the proposed naphthalene and tetrachloroethylene monitoring requirements for Outfall 014 at Indiana Harbor East:

> *At the end of a twelve month sampling period, the permittee may request in writing, a review of these monitoring requirements pursuant to 40 CFR §122.44(a)(2). Upon review by IDEM, the permit may be modified, after public notice and for hearing, to reduce or delete the monitoring requirements.*

ED_002857_00000137-00147

Response 3: IDEM agrees to the above request. However, this provision is being moved to the reopening provisions identified in Part I.J.8 of the permit. The additional reference to 40 CFR 122.44(a)(2) has been added in the Indiana Harbor West and Indiana Harbor Central Treatment Plant. The reopening provisions now states:

> ...to review the monitoring requirements pursuant to 40 CFR 122.44(a)(2). The permittee may request, in writing, a review of categorical monitoring requirements. Upon review by IDEM, the permit may be modified, to reduce or delete the monitoring requirements.

Comment 4: **TEMPERATURE AND THERMAL LOAD MONITORING AND REPORTING**

The draft NPDES permits for ArcelorMittal's Indiana Harbor plants: IH East, IH Long Carbon, IH West and IH Central Treatment Plant, contain twice per week temperature monitoring requirements and associated net thermal discharge loading reporting requirements for external outfalls discharging to the Indiana Harbor Ship Canal and Indiana Harbor. In the Fact Sheets for the NPDES permits, IDEM acknowledges that thermal discharges from the Indiana Harbor Plants do not pose a reasonable potential to exceed water quality standards for temperature. The reasonable potential evaluation is based on the results of instream sampling and a multi-discharger thermal model (see, for example, p. 32 of the Fact Sheet and pages 14 and 15 of Appendix A of the Fact Sheet for the draft IH West permit). The model results have been confirmed by studies that were conducted by Inland Steel and Ispat-Inland during 1997 and 1998 (see Attachment A below). Nonetheless, IDEM has determined that temperature and thermal loadings are pollutants of concern and has proposed the above-mentioned monitoring requirements, citing 327 IAC 5-2-11.5(e). ArcelorMittal disagrees with that determination.

In light of IDEM's finding that there is no reasonable potential to exceed the water quality standards for temperature within the Indiana Harbor Ship Canal and Indiana Harbor, the proposed temperature monitoring requirements and thermal discharge loading reporting requirements pose an unnecessary burden on these four facilities. While there is no particular Commissioner substantiation or rationale required by 327 IAC 5-2-11.5(e), that language was originally placed in the rule to allow monitoring based on situations where there is limited data and some evidence that there may be environmental harm. In this instance, there are sufficient data and historical documentation that the thermal discharges from these four facilities have neither caused exceedances of the temperature water criteria nor adversely impacted any biological species. These monitoring and reporting requirements are only monitoring for the sake of monitoring that will provide no useful direct information or data to assess compliance with ambient water quality standards. Therefore, these thermal monitoring and reporting requirements should be removed from the permits.

ArcelorMittal is willing to offer a periodic study approach that will provide definitive data to determine thermal discharge loadings from the Indiana Harbor Plants and definitive data to assess compliance with ambient Indiana water quality standards for temperature in the Indiana Harbor Ship Canal and Indiana Harbor. Following is the suggested language to be included in the permits as a replacement for the thermal monitoring and reporting requirements.

"Not later than 90 days after issuance of this permit, the permittee shall submit to IDEM a quality assurance project plan (QAPP) for thermal load and in-stream temperature monitoring studies to be conducted during warm weather months twice during the term of the NPDES permit (second and fourth years). The studies shall include thermal load determinations for all ArcelorMittal facilities discharging to the Indiana Harbor Ship Canal and Indiana Harbor, and sufficient concurrent in-stream temperature measurements to assess compliance with Indiana water quality standards for temperature. IDEM will provide comments within 45 days of receipt of the proposed studies. If IDEM does not provide comments within 45 days, the permittee shall conduct the studies as proposed."

This special condition should be included in each NPDES permit for ArcelorMittal's Indiana Harbor NPDES permits and the outfall and intake temperature monitoring requirements and the associated thermal discharge reporting requirements should be removed.

Finally, as discussed previously with IDEM, ArcelorMittal routinely measures intake and effluent temperatures early in the morning of each monitoring day, typically before 8:00 AM when 24-hour composite samplers are serviced. Sample collection and temperature measurements are conducted using contract resources. Any requirement for conducting temperature measurements during the midafternoon would require dispatching sampling crews for additional hours at additional expense, for no perceived environmental benefit.

Response 4: A discussion of the thermal analysis is included in the Fact Sheet of each permit. Indiana has water quality criteria for temperature that apply each month of the year and monitoring requirements for thermal discharges must be designed to protect the receiving stream on a year round basis. IDEM developed a conservative, dilution only model to determine if any ArcelorMittal outfall has a reasonable potential to exceed for temperature for any month of the year. While long-term data are available for ArcelorMittal East and ArcelorMittal Long Carbon, limited data are available for ArcelorMittal Central WWTP and ArcelorMittal West. ArcelorMittal Central WWTP and ArcelorMittal West have not been required to conduct routine temperature monitoring since the permit was renewed in 1986. Data from July 1999 and April 2000 are available from Grand Calumet River TMDL sampling and permit application data are also available. The available data show that ArcelorMittal West Outfall 009 is the warmest of all the ArcelorMittal outfalls and discharge flow from Outfall 009 can increase significantly during summer months. As noted in the Fact Sheet of the ArcelorMittal West permit, actual effluent data for January and February are required to make a reasonable potential determination for Outfalls 009, 010 and 011 due to the absence of effluent data for these months. The thermal load and instream temperature monitoring studies requested by ArcelorMittal in place of routine outfall monitoring do not include winter months. The requested studies may also not capture worst case summer conditions since only two studies are proposed over five years. Therefore, IDEM believes that a conservative model and long-term seasonal outfall monitoring provide a reasonable means to screen the ArcelorMittal discharges for potential water quality impacts. The frequency

ED_002857_00000137-00149

of sampling and the requirement for only grab samples were also established to be consistent with the collection of other required outfall data.

In regards to the footnote dictating at what time temperature samples must be collected, additional language has been added. The facility now has the option of either sampling for temperature at the intakes and outfalls between 12pm and 4pm or installing equipment that will measure the highest temperature reading in a 24-hr. period.

Comment 5: **WHOLE EFFLUENT TOXICITY (WET) MONITORING FREQUENCY**

Biomonitoring Frequencies
The above-referenced draft NPDES permits contain proposed biomonitoring requirements as follows:

Plant	Outfalls (TUc Thresholds)	Initial Biomonitoring Frequency	Follow-Up Biomonitoring Frequency if No Toxicity Demonstrated with Initial Testing
Indiana Harbor East	014 (10.0) 018 (7.7)	3 consecutive months, 2 species	Quarterly, life of permit; most sensitive species after 3 months with no toxicity
Indiana Harbor Long Carbon	001 (17.3)	3 consecutive months, 2 species	Quarterly, life of permit; most sensitive species after 3 months with no toxicity
Indiana Harbor West	009 (2.2) 011 (5.8) 012 (1.0)	None specified	Quarterly, life of permit; most sensitive species after 3 tests with no toxicity
Indiana Harbor Central Treatment Plant	001 (9.8)	None specified	Quarterly, life of permit; most sensitive species after 3 tests with no toxicity

ArcelorMittal finds the proposed biomonitoring frequencies are inconsistent across the plants and are excessive. In the alternative, ArcelorMittal requests the biomonitoring frequencies be made uniform across the four permits as follows: two species, monthly for three months. If no toxicity is demonstrated, annual monitoring using most sensitive species determined as noted below.

Most Sensitive Species
The Indiana Harbor East and Long Carbon permits contain the following requirement:

> *In the absence of toxicity with either species in the monthly testing for three months in the current tests, sensitive species will be selected based on frequency and failure of whole effluent toxicity tests with one or the other species in the immediate past.*

The Indiana Harbor West and Central Treatment Plant permits contain the following requirement:

> *In the absence of toxicity with either species in the initial three (3) tests, sensitive species will be selected based on frequency and failure of whole*

effluent toxicity tests with one or the other species in the previous toxicity tests.

ArcelorMittal finds these statements to be somewhat confusing with respect to determining the most sensitive species for subsequent testing after the initial three monthly tests, assuming no toxicity is demonstrated:

> *In the absence of toxicity with either species in the initial three (3) monthly tests, the permittee will select the most sensitive species for subsequent testing based on evaluation of the toxicity response from the three (3) monthly tests, or from any prior toxicity tests conducted by the permittee.*

Indiana Harbor West – Outfall (Monitoring Station 012)
As noted in the above table, and as specified in the draft NPDES permit for Indiana Harbor West at Part I.H.f.(2), (p. 52 of 77), the threshold chronic toxicity level for triggering a toxicity reduction evaluation (TRE) is 1.0 TUc. This threshold level is based on IDEM's erroneous determination that Indiana Harbor West No. 2 and 3 water intakes withdraw water directly from Lake Michigan and Outfall 012 discharges directly to the "open waters of Lake Michigan". Reference is made to ArcelorMittal's comments regarding IDEM's erroneous determination that monitoring station 012 discharges to the "open waters of Lake Michigan" and the related proposed water quality based effluent limits for monitoring station 012, which are not warranted based on *reasonable potential to exceed* assessments. Likewise, the proposed chronic toxicity threshold level of 1.0 TUc is not warranted for monitoring station 012. Given the discharge circumstances and high rate recycle for monitoring station 012, ArcelorMittal requests that the renewal NPDES permit not contain any biomonitoring requirements for monitoring station 012, if limited and monitored at all.

Response 5: For clarity, the Testing Frequency and Duration section (d.) has been modified to read *"The chronic toxicity test specified in Part I.I.1.b. above shall be conducted monthly for three (3) months initially and thereafter at least once every quarter for the duration of the permit. After three tests have been completed, that indicate no toxicity as defined in section f. below, the permittee may reduce the number of species tested to only include the most sensitive to the toxicity in the effluent. In the absence of toxicity with either species in the monthly testing for three (3) months in the current tests, sensitive species will be selected based on frequency and failure of whole effluent toxicity tests with one or the other species in the immediate past."*

In regards to Outfall 012 of Indiana Harbor West and the determination of a discharge to the open waters of Lake Michigan, please refer to Response #14. Based in part on that response and the use of several water treatment additives that may be discharged at that outfall, biomonitoring requirements will remain in this permit.

Comment 6: **FREEZE PROECTION**
ArcelorMittal requests that the discharge authorization statements for each internal and external Outfall in each of the Indiana Harbor permits contain freeze protection agents within the list of the authorized discharges. Seasonal use of

antifreeze in process and cooling water systems is essential to protect such systems from freeze damage when idled or taken out of service during cold weather periods. Upon start-up, service water is added to these systems and the antifreeze is diluted and becomes a component of the discharges. ArcelorMittal previously provided IDEM with estimates of possible concentrations of antifreeze for Outfall 011 at Indiana Harbor East and Outfall 001 at Indiana Harbor Long Carbon, and proposed to do so as follows for other outfalls at the Indiana Harbor plants where freeze protection agents may be used.

To ensure such discharges are authorized and regulated in an appropriate fashion, ArcelorMittal requests the following footnote be added in the NPDES permits for each internal and external outfall at the four ArcelorMittal Indiana Harbor plants:

> [x] The permittee is authorized to provide freeze protection for its process water, process wastewater and non-contact cooling water systems as necessary. Prior to discharge of the freeze protected water, the permittee shall provide IDEM estimates of discharge concentrations of the freeze protection agents.

Response 6: 'Freeze protection agents' are considered water treatment additives and are subject to IDEMs approval procedures prior to discharge. No changes to the discharge authorization statements will be made at this time. Additional language has been added to Section 5.8 of this Fact Sheet acknowledging the anticipated use of freeze protection agents.

Comment 7: **MONITORING REQUIREMENTS FOR FREE CYANIDE, FLUORIDE AND SELENIUM**

The above draft NPDES permits contain proposed routine monitoring requirements as set out below for free cyanide, fluoride and selenium. Water quality based effluent limits have not been proposed. Reportedly, the data will be used to determine whether the discharges pose a *reasonable potential* to cause or contribute to exceedances of water quality standards for the next renewal NPDES permits.

Indiana Harbor Central Treatment Plant (p.41 of 60)

	Monitoring Period During Permit Term	Monitoring Frequency	Sample Type
Outfall 001			
Fluoride	Life of permit	2 x month	24-hr composite
Free cyanide	Life of permit	2 x month	Grab

ED_002857_00000137-00152

	Monitoring Period During Permit Term	Monitoring Frequency	Sample Type
Outfall 002			
Fluoride	36 to 47 months	2 x month	24-hr composite
Free cyanide	36 to 47 months	2 x month	Grab
Outfall 009			
Fluoride	36 to 47 months	2 x month	24-hr composite
Free cyanide	36 to 47 months	2 x month	Grab
Outfall 010			
Fluoride	36 to 47 months	2 x month	24-hr composite
Free cyanide	36 to 47 months	2 x month	Grab
Outfall 011			
Fluoride	36 to 47 months	2 x month	24-hr composite
Free cyanide	36 to 47 months	2 x month	Grab

The Fact Sheets for the draft Indiana Harbor permits state that a review of Indiana's Section 303(d) list shows there are no pollutants on the list that have the potential to impact waste load allocation analyses for the renewal of NPDES permits on a whole watershed basis (see Attachment A – Water Quality Assessment, p. 3). As shown below, available information and data, as well as Indiana's Section 302(d) list, demonstrate there is no reasonable basis for the proposed monitoring requirements.

Free Cyanide

The Indiana water quality standards for cyanide are for free cyanide as follows:

	ug/L	mg/L
Criteria Maximum Concentration	22	0.022
Criteria Continuous Concentration (4-Day Average)	5.2	0.0052

Indiana's 2008 Section 303(d) list included the Grand Calumet River as impaired for free cyanide, but not the Indiana Harbor Ship Canal or Indiana Harbor. The draft 2010 Section 303(d) list is the same. The Fact Sheet for Indiana Harbor East (p. 26 of 111) and Fact Sheets for the other ArcelorMittal Indiana Harbor permits state there is a new Section 303(d) listing for free cyanide in Indiana Harbor. However, the "new listing" is not reported in the Indiana 2008 Section 303(d) list or the draft 2010 list.

The Fact Sheets further state the proposed monitoring requirements for free cyanide are based on data collected at the IHC-0 monitoring station in Indiana Harbor during 2000 and 2001. These data are at least 10 years old and, as shown below, do not reflect current conditions in Indiana Harbor. Attachment A to this comment is a compilation of available IDEM data for cyanide amenable to chlorination (CATC), free cyanide (F. CN) and total cyanide (T. CN) collected at monitoring station IHC-0 (Indiana Harbor) from January 1990 to March 2008 and at monitoring station IHC-2 (Indiana Harbor Ship Canal at Dickey Road) for the period January 1990 to February 2010. The Dickey Road monitoring station IHC-2 is downstream of Indiana Harbor Central Treatment Plant and Indiana Harbor Long Carbon and upstream of all Indiana Harbor East and West outfalls. The Indiana Harbor IHC-0 monitoring station is located downstream of all

Indiana Harbor East outfalls and downstream of Indiana Harbor West Outfalls 002, 009 and 010, and in the immediate vicinity of where the discharge channel for Indiana Harbor West Outfall 011 empties into Indiana Harbor. Thus, the data collected at the IHC-0 monitoring station can be affected by the discharge from Outfall 011. Until recently, the discharge from Outfall 011 included treated process wastewaters from the blast furnaces and the sinter plant. These wastewaters can contain cyanide compounds. Unlike IHC-0, data obtained at the IHC-2 Dickey Road monitoring station provides a good representation of water quality in the upstream end of the Indiana Harbor Ship Canal.

The data for station IHC-2 show nearly all non-detect results at concentrations of < 0.005 mg/L for all three forms of cyanide for the entire period of record from 1990-2010. During 2000 and 2001 there were a few detect values of only total cyanide in the 0.007 to 0.008 mg/L range. For the period 2002 to 2010, there were three detect values at 0.006 mg/L (Dec. 2002, Dec. 2003, Jan. 2005), all well below the CMC water quality standard of 0.022 mg/L. These data do not indicate impairment for free cyanide at and upstream of Dickey Road.

The data for IHC-0 show detections of all forms of cyanide during 2000 and 2001; however, all reported analytical results were < 0.005 mg/L from 2002 through March 2008, when IDEM apparently suspended monitoring for total cyanide at station IHC-0. Thus, the data show CMC and CCC water quality standards for free cyanide have been attained at that location for at least six consecutive years, and at station IHC-2 for at least eight consecutive years. ArcelorMittal believes it is not appropriate to base considerations of impairment for free cyanide and NPDES permit monitoring requirements on data that are more than 10 years old.

Furthermore, available monitoring data for total cyanide at Indiana Harbor East and Indiana Harbor West external outfalls (July 2005 to June 2010) show most measurements of total cyanide are not present at levels above 0.005 mg/L, with average total cyanide discharge concentrations in the range of 0.005 mg/L to 0.013 mg/L on an outfall-by outfall basis (non-detect concentrations counted as present at 0.005 mg/L).

Given available monitoring data at stations IHC-0 and IHC-2 for the last several years and recent ArcelorMittal monitoring data for total cyanide, there is no basis to conclude the Indiana Harbor Ship Canal or Indiana Harbor are impaired for free cyanide, and no basis to include free cyanide monitoring requirements in the renewal NPDES permits for these four facilities. Thus, ArcelorMittal requests that free cyanide monitoring requirements be deleted from the NPDES permits for Indiana Harbor East, Indiana Harbor Long Carbon, Indiana Harbor West and Indiana Harbor Central Treatment Plant.

Fluoride

The Indiana water quality standards for fluoride are 1.0 mg/L applicable to Lake Michigan and 3.4 mg/l applicable to the IHSC. The water quality standard for Lake Michigan was established to minimize or prevent increased levels of fluoride in Lake Michigan (see 327 IAC 2-1.5-8, Table 8-9 of the water quality standards – Additional Criteria for Lake Michigan). The standard applicable to the IHSC is a chronic aquatic life criterion. Available monitoring data for fluoride at the IHC-2 Dickey Road monitoring station (January 2005 to

December 2009) show the geometric mean concentration of fluoride at that location is 0.49 mg/L, approximately one-half of the Lake Michigan water quality standard, and approximately one seventh of the IHSC aquatic life criterion.

Recent monitoring data (July 2005 to June 2010) for ArcelorMittal Indiana Harbor East and West facility outfalls are as follows:

Plant/Outfall	LTA Discharge Flow (mgd)	Average Fluoride Concentration (mg/L); (Number of data)	Gross Mass Loading (lbs/day)
Indiana Harbor East			
Outfall 011	84.7	0.27 (8)	191
Outfall 014	11.5	1.4 (2)	134
Outfall 018	15.9	0.9 (2)	119
Total IH East	112.1		444
Indiana Harbor West			
Outfall 002	11.2	0.41 (1)	38
Outfall 009	55.3	0.45 (20)	208
Outfall 010	36.6	0.45 (20)	137
Outfall 011	23.4	1.4 (19)	273
Total IH West	126.5		656
Total IH East and West	238.6		1,100
IDEM WQ Design Flow @ Canal Road (352 cfs)	227.5	0.49 (geometric mean)	930
Total Indiana Harbor (WQ Design Flow does not Include IDEM Lake Michigan Intrusion Flow)	466.1	0.52 (calculated)	2,030
IDEM Lake Michigan Intrusion Flow (132 cfs)	85.3	0.07 (IDEM model data)	50
Total Indiana Harbor and Lake Michigan Intrusion Flow	551.4	0.45 (calculated)	2,080

This simplified mass balance approach to estimating fluoride concentrations in Indiana Harbor shows that when considering the net addition of flow from ArcelorMittal Indiana Harbor East and West and gross mass discharges of fluoride, the calculated concentration of fluoride in Indiana Harbor is 0.52 mg/L, again approximately one-half the Lake Michigan water quality standard of 1.0 mg/L. These calculations indicate that the ArcelorMittal Indiana Harbor East and West gross discharges of fluoride add only 0.03 mg/L of fluoride to the background concentration measured at monitoring station IHC-2 (Dickey Road), which is downstream of Indiana Harbor Central Treatment Plant and Indiana Harbor Long Carbon. The above monitoring data do not reflect the zero discharge wastewater treatment system installed at Indiana Harbor West, which will reduce the above-listed mass discharge from Outfall 011. When accounting for the Lake Michigan intrusion flow, the calculated fluoride concentration at the mouth of Indiana Harbor is 0.45 mg/L, well below the 1.0 mg/L Lake Michigan water quality standard. Furthermore, IDEM's multi-discharger WLA model

overestimates discharges from the ArcelorMittal Indiana Harbor mills and fails to account properly for background fluoride monitoring data at Dickey Road.

The data presented in the table above demonstrate that discharges of fluoride from Indiana Harbor East, Indiana Harbor West, Indiana Harbor Long Carbon and Indiana Harbor Central Treatment Plant do not pose a *reasonable potential* to cause or contribute to exceedances of the water quality standards for fluoride in Lake Michigan and in the IHSC. Accordingly, ArcelorMittal requests the proposed monitoring requirements for fluoride be deleted from each of the four Indiana Harbor NPDES permits.

Response 7: Free Cyanide

The Indiana Harbor is included on the final 2010 303(d) list submitted by IDEM to U.S. EPA for free cyanide based on data collected in 2000 and 2001 at IDEM fixed water quality monitoring station IHC-0. The chronic aquatic criterion for free cyanide of 5.2 ug/l is near the reporting level of 5 ug/l used by IDEM for fixed station free cyanide data. Data reported as less than the reporting level may still be near the criterion as shown in TMDL sampling data collected in the Indiana Harbor Canal and Indiana Harbor in July 1999 and April 2000 using a more sensitive test method. Total cyanide is currently monitored at many of the ArcelorMittal internal and final outfalls, but little data for free cyanide are available. The total cyanide data include values reported above the chronic aquatic criterion for free cyanide. Since total cyanide is present at many of the ArcelorMittal outfalls and free cyanide has been shown to be present in the Indiana Harbor Canal and Indiana Harbor, a multi-discharger model for free cyanide is appropriate for the subwatershed. The monitoring requirements will allow the collection of long-term free cyanide data at final outfalls with known internal sources of total cyanide and provide a year of data at other final outfalls to provide sufficient information to characterize the variability of the discharges and conduct a multi-discharger model for free cyanide in the next permit renewal.

Fluoride

A multi-discharger model for fluoride was conducted based on known sources of fluoride in the ArcelorMittal discharges and known sources in the East Branch Grand Calumet River and West Branch Grand Calumet River that contribute to the background concentration. Limited data were available for some ArcelorMittal final outfalls that contain sources of fluoride at internal outfalls resulting in projected instream concentrations in the Indiana Harbor near the Lake Michigan criterion. Monitoring is being required to provide sufficient information to better characterize the variability of fluoride in the discharges and to conduct a multi-discharger model for free fluoride in the next permit renewal.

Comment 8: **MONITORING FREQUENCY FOR TOTAL RESIDUAL CHLORINE (TRC)**

Each of the draft NPDES permits for the Indiana Harbor plants contains proposed effluent limits and monitoring requirements for total residual chlorine (TRC) at external outfalls. The proposed monitoring frequencies are as follows:

ED_002857_00000137-00156

Plant, External Outfalls	Proposed Monitoring Frequencies
Indiana Harbor East 011, 014, 018 019 518 008 (only during emergency overflow)	 5 x week 1 x month 2 x week 1 x daily
Indiana Harbor Long Carbon 001	 5 x week
Indiana Harbor West 002, 009, 010, 011, 012	 1 x daily
Indiana Harbor Central Treatment Plant 001	 1 x daily

As discussed previously with IDEM, ArcelorMittal conducts TRC monitoring at each plant using contract sampling and analytical resources. Monitoring frequencies of daily would require weekend monitoring at high cost. Given that historical TRC monitoring data for each plant do not indicate significant or frequent problems with TRC monitoring, ArcelorMittal requests that, except for Outfall 019 at Indiana Harbor East, the TRC monitoring frequencies for all external outfalls at each plant be set at no more than 5 x week. IDEM addressed this issue for the Indiana Harbor East and Indiana Harbor Long Carbon draft permits, but did not for Indiana Harbor West and Indiana Harbor Central Treatment Plant. ArcelorMittal believes this was an oversight and requests that IDEM set the TRC monitoring frequencies at Indiana Harbor West and Indiana Harbor Central Treatment Plant at no more than 5 x week.

Additional Comments Regarding TRC

1. Indiana Harbor East Outfall 019, Footnote 6 (p. 19 of 84). The footnote needs to be expanded to include the standard TRC provisions for discharges between the LOD and LOQ for both the proposed monthly average and daily maximum effluent limits.

2. Indiana Harbor East Outfall 518, (p. 16 of 84). A footnote needs to be added to include the standard TRC provisions for discharges between the LOD and LOQ for both the proposed monthly average and daily maximum effluent limits.

3. Indiana Harbor West Outfalls 002, 009, 010, 011 and 012, (pp. 3, 6, 10, 13, 19 of 77). For Outfalls 002 and 009, footnote (5) should also refer to the monthly average mass limit. For Outfalls 010 and 011, footnote (4) should apply to the average mass limit. For Outfall 012, footnote (6) should apply to the monthly average mass. In addition, only footnote 9 for Outfall 012 refers to Section I.G, when all of the other outfalls with TRC limits are referenced in that section.

Response 8: IDEM agrees that the IH West and IH CTP permits will be changed to reflect a TRC monitoring frequency of 5 X Week for each final outfall. In addition, the footnote corresponding to TRC monitoring frequency has been changed from:

ED_002857_00000137-00157

Monitoring for TRC shall be 1 X Daily during Zebra or Quagga mussel intake chlorination, and continue for three additional days after Zebra or Quagga mussel treatment has been completed.

To:

Monitoring for TRC shall be performed, at a minimum, during Zebra or Quagga mussel intake chlorination, and continue for three additional days after Zebra or Quagga mussel treatment has been completed.

The footnote mentioned in item #3 in the comment above will not be added as suggested. IDEM does not recognize the need for this footnote. Part I.C.3.a.(1) of the permit explains how mass based monthly average limitations are to be calculated.

Comment 9: **ANALYTICAL METHODS, SAMPLE TYPES, WATER TREATMENT ADDITIVES, LOW VOLUME WASTES**

ArcelorMittal requests the following comments regarding monitoring requirements, analytical methods, water treatment additives and low volume wastes be addressed in each of the Indiana Harbor NPDES permits, as appropriate:

1. Analytical Method for Total Cyanide and Free Cyanide Monitoring Requirements

The most recent revision to 40 CFR Part 136 lists ASTM D 2036-98(A) as an approved analytical method for total cyanide, in addition to those listed in the draft permits. The permits should clearly specify that any method approved by EPA and published at 40 CFR Part 136 can be used for NPDES permit compliance monitoring. In addition, where monitoring for both total cyanide and free cyanide is required (i.e., Outfall 014 at Indiana Harbor East), ArcelorMittal requests that if the total cyanide analytical result is non-detect, the corresponding analysis for free cyanide can be waived.

2. Sample type for Total Phenols (Phenols (4AAP))

ArcelorMittal requests the sample type of total phenols be specified as "24-hour composite" instead of "grab" to correspond to current monitoring requirements and current monitoring practices. This would allow continued collection of ammonia-N and total phenols samples in one container and separation of samples in the laboratory. Otherwise, additional samples would have to be collected to meet the "grab" sample requirement for total phenols.

3. Water Treatment Additives

Footnotes regarding water treatment additives for each outfall in each permit require reporting of changes in dosage rates in accordance with Part II.C. 1. of the standard conditions. As part of the NPDES permit renewal process, ArcelorMittal provided IDEM lists of currently used water treatment additives for each Indiana Harbor facility and the respective estimated maximum dosage

ED_002857_00000137-00158

rates of each additive. Part II.C.1.b. of the standard conditions states notice to IDEM is required only when:

> *"The alteration or addition could significantly change the nature of, or increase the quantity of pollutants discharged. This notification applies to pollutants that are subject neither to effluent limitations in Part I.A. nor to notification requirements in Part II.C.9 of this permit."*

ArcelorMittal's interpretation of Part II.C.1.B. is that water treatment additives fall under the above reporting requirement. Because ArcelorMittal has reported to IDEM estimated maximum dosage rates of the water treatment additives, we believe this reporting requirement would not come into effect unless the previously reported maximum dosage rates were exceeded. Otherwise, taken literally, the reporting requirement would be virtually impossible to meet. For example, many non-contact cooling water and process water outfalls have effluent limits for total residual chlorine (TRC). Effluent dechlorination with sodium bisulfite is practiced to maintain compliance with the TRC effluent limits. The rates of application of sodium bisulfite are variable and are based on the amounts of TRC present. It would not be possible or reasonable to record changes in sodium bisulfite addition over the course of a day for each outfall. The same issue pertains to use of water treatment chemicals at process wastewater treatment facilities, but to a lesser extent.

To address this issue, ArcelorMittal requests the footnotes in each of the Indiana Harbor facility NPDES permits be modified as follows:

> *"In the event that changes are to be made in the use of water treatment additives including dosage rates to Outfall 00x <u>beyond previously reported estimated maximum dosage rates</u>, the permittee shall notify the Indiana Department of Environmental Management as required by Part II.C.1. of this permit."* <u>emphasis added</u>

4. Low volume wastes

For purposes of defining "low volume wastes" that may be discharged from boiler house and power station operations, ArcelorMittal requests that reverse osmosis reject water be considered "low volume waste". We believe this is consistent with the specialized definition at 40 CFR §423.11(b) of the Steam Electric Power Generating effluent limitations guidelines which includes ion exchange water treatment system wastewaters as low volume waste. Reverse osmosis systems are now being used to replace many of the conventional ion exchange and water softening operations at large boiler house and power generating stations for boiler water make-up treatment.

Response 9: <u>Analytical Method for Total Cyanide and Free Cyanide Monitoring Requirements</u>

IDEM establishes which analytical methods should be used in the NPDES permits, in part, to ensure that the data collected can be used adequately. Parameters identified in 40 CFR Part 136 often have many approved analytical methods at varying levels of detection (LOD) and quantitation (LOQ). Allowing a permittee to select any of those approved methods may not provide data at the factor of concentration needed. For example, if the permittee provided analytical

data for a Reasonable Potential to Exceed analysis, a data set with values of <1 mg/l could not determine if a reasonable potential existed if the water quality criterion was at 0.5 mg/l. Therefore, IDEM determines which analytical method(s) can be used. The permittee may request to use another analytical method, however, and that request must be approved by IDEM prior to use for data collection.

Sample type for Total Phenols (Phenols (4AAP))
Grab samples should be used as the collection method for parameters that are: (i) relatively constant in the discharge; (ii) likely to change with storage such as temperature, residual chlorine, cyanides, phenols, pH, etc.; or (iii) likely affected by compositing such as oil and grease and volatiles. As the total phenols concentration in this permit is expected to be relatively constant, identified above as likely to change with storage, and is considered a volatile compound, the 'grab' sample method will remain.

Water Treatment Additives
IDEM agrees, in part, with the comment above regarding the footnotes directed at water treatment additives. However, IDEM proposes to incorporate the following statement in lieu of the one provided:

> *"In the event that changes are to be made in the use of water treatment additives that could significantly change the nature of, or increase the discharge concentration of the additive, the permittee shall notify the Indiana Department of Environmental Management as required by Part II.C.1. of this permit."*

It is important to note that the dosage rate is not the only deciding factor when calculating the discharge concentration of a pollutant from a water treatment additive. Other factors that need be considered when determining the discharge concentration are, but not limited to, discharge flow, equipment used, physical conditions, etc.

Low Volume Wastes
The comment above regarding the classification of RO reject water as 'Low Volume Waste' does not appear to be applicable to Indiana Harbor West or Indiana Harbor Central Treatment Plant nor would such a change necessitate a revision to the effluent limitations at either Internal or Final Outfalls. No changes are necessary at this time.

Comment 10: **CHANGES IN DISCHARGES OF TOXIC SUBSTANCES**
The draft NPDES permit for the Indiana Harbor Central Treatment Plant includes a Standard Condition at Part II.A.16 (p. 48 of 59) titled "New or Increased Discharges of Pollutants." The other three draft Indiana Harbor permits contain the same Standard Condition in Part II.A.16, but the titles are "Changes in Discharges of Toxic Substances." ArcelorMittal requests the titles be made consistent in all four NPDES permits so that the title reads "New or Increased Discharges of Pollutants."

In addition, page 48 of the draft NPDES permit for the Indiana Harbor Central Treatment Plant contains the following statement:

"This permit prohibits the permittee from taking any deliberate action that would result in a new or increased discharge of a bioaccumulative chemical of concern (BCC) or a new or increased permit limit for a pollutant parameter that is not a BCC unless one of the following is completed prior to commencement of the action: ... " (emphasis added.)

The word "deliberate" is missing from the statement in the draft NPDES permits for Indiana Harbor East, Indiana Harbor Long Carbon and Indiana Harbor West. ArcelorMittal requests that the word "deliberate" be added to the NPDES permits issued for Indiana Harbor East (p. 70 of 84), Indiana Harbor Long Carbon (p. 50 of 60), Indiana Harbor West (p. 62 of 72), as well as Indiana Harbor Central Treatment Plant (p. 48 of 59).

Response 10: The title of Part II.A.16 will be modified from "Changes in Discharges of Toxic Substances" to "New or Increased Discharges of Pollutants" for consistency. Additionally, the word "deliberate" has been added to the NPDES permit.

Comment 11: **STORM WATER NON-NUMERIC CONDITIONS**

Each of the Indiana Harbor draft NPDES permits includes special conditions under Storm Water Non Numeric Conditions that are conditions of applicable Title V air permits. For example, paragraph 5.b. that references good housekeeping, is covered under the applicable requirements in the facility's Fugitive Dust Control Plan. Also, paragraph 10.c. references regular inspections of air pollution control equipment as well as monitoring inlets and outlets of air flow ducts to check for particulate deposition. These requirements are duplicative of requirements in the applicable Title V air permits. Accordingly, ArcelorMittal requests that IDEM remove these requirements from the draft NPDES permits for the Indiana Harbor facilities, specifically every action, inspection or reporting requirement related to air pollution control equipment and fugitive dust controls.

Response 11: The storm water non-numeric conditions are the same as those in other similarly issued Individual NPDES permits. As a delegated state program, the IDEM modeled its storm water permitting approach after the US EPA's storm water program. For duplicative conditions, in instances where actions taken to comply the Title V air permits also satisfy the storm water non-numeric conditions, the action can be documented in the SWPPP for compliance purposes.

Comment 12: **PCB DISCHARGE PROHIBITION**

Part III of Each Draft NPDES Permit

ArcelorMittal has implemented programs to eliminate transformers and capacitors containing PCBs from its Indiana Harbor facilities and has essentially eliminated PCB-containing transformers from electrical service. PCBs are not used in any process, water treatment or wastewater treatment operations. The draft Indiana Harbor NPDES permits contains provisions that prohibit discharges of PCBs. These conditions were first included in NPDES permits issued in the 1980's and earlier. Since that time, there have been significant advances in analytical science such that PCBs can now be detected in the low ng/L range and lower. Consequently, it may be possible to detect PCBs in discharges where the

source is the intake water. Accordingly, ArcelorMittal requests the phrase "... attributable to facility operations" be added to the PCB discharge prohibition statement in each Indiana Harbor permit. Without this requested change, ArcelorMittal could be put in the untenable position of being required to treat large volume process wastewater and non-contact cooling water discharges for PCBs that are beyond its control and at levels that may be untreatable.

Response 12: The source of the prohibition says specifically: *"There shall be no discharge of polychlorinated biphenyl (PCBs) compounds such as those commonly used for transformer fluid."* In essence, this is a prohibition on using compounds containing PCB compounds at these facilities. Should PCBs be detected in the discharge, the facility should take action to determine if the source is indeed the source water.

Comment 13: **POLLUTANT MINIMIZATION PROGRAMS**

Part I.B of each draft NPDES Permit contains requirements for Pollutant Minimization Programs (PMPs) for outfalls where total residual chlorine (TRC) is limited. A PMP program is also required for silver at Outfall 001 at Indiana Harbor Central Treatment Plant. Paragraphs (3) of the PMP requirements for the draft NPDES permits for Indiana Harbor East (p. 55 of 84) and Indiana Harbor Long Carbon (p. 37 of 60) require only *"Monitoring as necessary to record progress toward the goal."*, whereas Paragraphs (3) contained in the draft NPDES permits for Indiana Harbor West (p. 48 of 77) and Central Treatment Plant (p. 34 of 59) prescribes more extensive set of monitoring programs. Also paragraphs (4) of the proposed PMPs require submission of an annual status report. Because monitoring data will be submitted as part of the monthly discharge monitoring reports, the requirement to submit an annual summary report is redundant and should be eliminated.

Consistent with the manner in which PMP requirements were addressed in the recently issued Burns Harbor NPDES permit, ArcelorMittal requests that the monitoring requirements for paragraphs (3) in the Indiana Harbor West and Indiana Harbor Central Treatment Plant NPDES permit be made consistent with those for Indiana Harbor East and Indiana Harbor Long Carbon, and that the paragraphs (4) annual reporting requirements be eliminated.

Response 13: For Indiana Harbor West and Indiana Harbor Central Treatment Plant, paragraph (3) will be made consistent with those for Indiana Harbor East and Indiana Harbor Long Carbon. However, the annual report is required in accordance with 327 IAC 5-2-11.6(h)(7)(A)(iv). The annual reporting requirements will not be removed.

Comment 14: **NEW PROPOSED OUTFALL 012 (MONITORING STATION 012)**

Outfall 012 is a new internal compliance monitoring station that IDEM proposes to add to the renewal NPDES permit for Indiana Harbor West. Monitoring station 012 is the overflow from the North Lagoon that is routed directly to the forebay of the No. 3 Pumphouse intake (No. 3 intake). The North Lagoon overflow contains fully treated process water from internal Outfalls 111 (84" hot strip mill) and 211 (No. 3 cold mill complex), non-contact cooling water and storm water. The current NPDES permit and the draft renewal NPDES permit

contain technology-based effluent limits at internal Outfalls 111 and 211 that were derived from 40 CFR Part 420. Thus, process water discharges from the 84" hot strip mill and the No. 3 cold mill complex are regulated and fully treated prior to mixing with non-contact cooling water and storm water in the North Lagoon and prior to recycle through the No. 3 intake.

The Fact Sheet for the draft Indiana Harbor West NPDES permit raises a number of issues associated with monitoring station 012:

1. IDEM considers the intake channel for the Nos. 2 and 3 intakes at IH West as "open waters of Lake Michigan". However, the regulatory definition of the "open waters of Lake Michigan" clearly excludes nearly all of the intake channel because the channel is within the "northern most point of the LTV Steel property" established by that definition (see below).

2. Lack of proper consideration of the high rate recycle of fully treated process wastewaters from the 84" hot strip mill and the No. 3 cold strip mill complex provided by the No. 3 intake.

3. Improper water quality based effluent limits for vanadium and zinc.

Open Waters of Lake Michigan

The definition of the "open waters of Lake Michigan" is set out in the Indiana water quality standards at 327 IAC 2-1.5-2(64):

> *"'Open waters of Lake Michigan" means all of the waters within Lake Michigan lakeward from a line drawn across the mouth of tributaries to the lake, including all waters enclosed by constructed breakwaters. For the Indiana Harbor Ship Canal, the boundary of the open waters of Lake Michigan is delineated by a line drawn across the mouth of the harbor from the East Breakwater Light (1995 United States Coast Guard Light List No. 19675) to the northernmost point of the LTV Steel Property along the west side of the harbor."*

IDEM states in Attachment A of the Fact Sheet (p. 5), that Indiana Harbor West has two water intakes in Lake Michigan; and, that IDEM considers the intake channel for the Nos. 2 and 3 intakes as "open waters of Lake Michigan" (p. 12). Figure IHW-1 is an aerial photograph showing the Nos. 2 and 3 intakes, the intake channel and the northern section of the Indiana Harbor Ship canal that borders the open waters of Lake Michigan. A line depicting the boundary described in the above definition of "open waters of Lake Michigan" is shown on the aerial photograph. It is evident from a simple reading of the regulatory definition of "open waters of Lake Michigan" and review of the aerial photograph that the Indiana Harbor West intake channel and the Nos. 2 and 3 intakes are not within open waters of Lake Michigan. They are not lakeward of the line between the East Breakwater Light and the northernmost point of LTV Steel property (now ArcelorMittal Indiana Harbor LLC property). In fact, the No. 3 Intake is approximately 0.21 miles south of the northernmost point of ArcelorMittal property and the No. 2 intake is approximately 1.0 miles south and southwest of the northernmost point of ArcelorMittal property. Thus, IDEM's assertion that the intake channel for the Nos. 2 and 3 intakes are within the open waters of Lake Michigan is wrong, and any applications of Indiana water quality

ED_002857_00000137-00163

standards and water quality standards implementation procedures based on that premise are unreasonable and unlawful.

As can clearly be seen in the aerial photo, monitoring station 012 does not discharge directly into the intake channel. Instead, this discharge is directly into the No. 3 Pumphouse forebay. Therefore, it is a moot point if IDEM chooses to disagree with ArcelorMittal's interpretation of the "open waters of Lake Michigan" because the monitoring station 012 discharge does not discharge directly to the intake channel. As a result, monitoring station 012 should not be regulated at all because it does not discharge directly to waters of the State.

High-Rate Recycle of North Lagoon Overflow and Outfall 111 and Outfall 211 Compliance Assessments

During January 2011, ArcelorMittal submitted a report of field studies conducted during November 2010 that demonstrated the water discharged from Outfall 012 is recycled to the plant. The great majority, if not all, of the recycled water is returned to the 84" hot strip mill and the No. 3 cold mill complex. This is a high-rate process water recycle system that does not discharge directly to waters of the State.

The draft NPDES permit requires that measured discharge flows at internal Outfalls 111 and 211 be used to calculate mass discharge of limited pollutants at those internal compliance monitoring stations. Because the fully treated process waters discharged from Outfalls 111 and 211 are recycled back to the processes that generated the process wastewaters and are not discharged to waters of the state, calculations of mass discharges of limited pollutants at Outfalls 111 and 211 as required by the draft NPDES permit overstate actual discharges by a considerable amount. In effect, ArcelorMittal is not receiving full credit for the technology it installed to comply with the technology-based effluent limits. For purposes of assessing compliance with technology-based effluent limits at internal Outfalls 111 and 211, ArcelorMittal requests that the NPDES permit authorize a nominal and constant 75% reduction in calculated mass loadings to account for the high rate recycle of treated process water through the No. 3 intake.

Improper Water Quality-Based Effluent Limits for Vanadium and Zinc at Monitoring Station 012

As demonstrated above, IDEM wrongly assumed the discharge from Outfall 012 is to the open waters of Lake Michigan and based its water quality assessment on that incorrect premise. In so doing, IDEM also used an incorrect monitoring station 012 discharge flow of 70 million gallons per day (mgd) for its reasonable potential assessments. At most, any reasonable potential assessment should be based on a flow of not more than 7 mgd because of the recycle noted above; and, any discharge should be considered to the Indiana Harbor Ship Canal (Outfalls 009, 010) or to Indiana Harbor (Outfall 011).

Furthermore, reasonable potential assessments for Outfalls 009, 010 and 011 conducted by IDEM implicitly consider any discharges resulting from recycle of the North Lagoon overflow to the Nos. 2 and 3 intakes. Those reasonable potential assessments did not yield any proposed WQBELs for any pollutants contained in the North Lagoon overflow.

ED_002857_00000137-00164

In addition, for vanadium, one datum that is clearly an outlier should be discounted from the RPE considerations in accordance with IDEM water quality assessment policies. Table 3 of the November 2010 ArcelorMittal Outfall 012 flow recycle study presents estimates of possible discharges to the IHSC and Indiana Harbor. Those estimates show that only minimal amounts of discharge are possible and that these discharges, if occurring, would not impact water quality in the Indiana Harbor Ship Canal or Indiana Harbor to any appreciable extent considering water quality design flows developed by IDEM.

As noted above, ArcelorMittal requests that a 75% recycle rate credit be allowed for compliance determinations for internal Outfalls 111, 211 and 411. Given this credit, there should be no reasonable potential for the discharges from Outfalls 111 or 211 to cause or contribute to any exceedances of water quality standards in the Indiana Harbor Ship Canal and Indiana Harbor, and no WQBELs should be established for Outfalls 111, 211 or monitoring station 012.

ArcelorMittal would agree to periodically demonstrate recycle rates at monitoring station 012 and the No. 3 water intake during the term of the renewal NPDES permit. For example, the study could be repeated once during the second year of the NPDES permit and once just prior to the next renewal permit application.

Monitoring Station 012, Reduction in Proposed Mercury Monitoring Frequency
Footnote [5] on page 18 of 77 of the draft NPDES permit would allow a modification of the permit to reduce the mercury monitoring frequency at monitoring station 012. ArcelorMittal requests that this same provision also be added for Outfalls 002, 009, 010 and 011.

Response 14: **New Proposed Outfall 012 (Monitoring Station 012)**

Open Waters of Lake Michigan
Based on the facility map submitted with the permit renewal application, the northern most point of the ArcelorMittal property is the breakwall on the west side of the Indiana Harbor. ArcelorMittal did not provide any information as part of their comments on the draft permit that indicates that their property boundary does not include the breakwall. Therefore, based on the definition of Open Waters of Lake Michigan under 327 IAC 2-1.5-2(64), for the Indiana Harbor Ship Canal, the boundary of the open waters of Lake Michigan is delineated by a line drawn across the mouth of the harbor from the East Breakwater Light to the northernmost point of the breakwall along the west side of the harbor. Therefore, the channel behind the breakwall used to convey water to the No. 2 and No. 3 intakes is considered to be the open waters of Lake Michigan. While Outfall 012 does not discharge directly to the intake channel, the discharge does enter the No. 3 intake forebay and is either recycled through the No. 3 intake or flows into the intake channel and enters waters of the state.

High-Rate Recycle of North Lagoon Overflow and Outfall 111 and Outfall 211 Compliance Assessments
Internal Outfalls 111 and 211 will remain in their entirety. Technology-based effluent limitations were derived using flow and production values from those sources, respectively.

Improper WQBELs for Vanadium and Zinc at Monitoring Station 012
Discharges to the open waters of Lake Michigan are not granted mixing zones by default so using a lower effluent flow would not increase the concentration-based preliminary effluent limitations used in the reasonable potential analysis. As noted in the permit application for ArcelorMittal West, vanadium is present in steel processed at the 84" Hot Strip Mill so it is a pollutant of concern at Outfall 012. ArcelorMittal has not provided a rationale for the high vanadium sample so there is no reason to discount it as not being representative of the discharge through Outfall 012. The January 2011 report that provides the results of the November 2010 Outfall 012 flow recycle study and estimates of possible discharges from Outfall 012 does not include additional monitoring data for Outfall 012 collected by ArcelorMittal after the report was finalized. This additional data contained the high effluent sample for vanadium so the estimates for vanadium in the report do not fully characterize the discharge. Since the discharge from Outfall 012 does enter waters of the state, a reasonable potential analysis based on a discharge to the intake channel is appropriate.

Monitoring Station 012, Reduction in Proposed Mercury Monitoring Frequency
The above mentioned footnote was included only at Outfall 012 because the data for mercury at that outfall was insufficient to determine if a Reasonable Potential to Exceed water quality criterion existed. Therefore, monitoring requirements are included for a minimum of one year's time in order to gather the data needed. The permittee may, after such a period, request a review of the data for RPE analysis.

On the contrary, mercury limitations exist at the other identified outfalls because the historical data was sufficient to determine that an RPE did exist at those location. The permittee is able, however, to request a modification any time they think data collected from any of the above mentioned outfalls indicates otherwise.

Comment 15: **OUTFALLS 701 & 702 – ZERO DISCHARGE**
In anticipation of the renewal NPDES permit for Indiana Harbor West, new and upgraded process water treatment and recycle systems at the Steel Producing Department vacuum degasser and continuous slab caster were recently installed and placed into operation. The investment cost for these upgrades was approximately $12,000,000. These upgraded systems were installed primarily to achieve the generally applicable technology-based effluent limits for those operations set out at 40 CFR Part 420 rather than have the limits apply at Outfall 011 as in the current NPDES permit. An innovative feature of the upgraded design was the potential for zero discharge from one or both of these systems. In order to achieve zero discharge, the fully treated process water system blowdowns can be utilized in the gas cleaning systems for the basic oxygen furnaces (BOFs). This feature was viewed as an innovative approach to achieving one of the overarching goals of the Clean Water Act – zero discharge of pollutants (see 33 U.S.C. §§ 1251(a)(1)).

ArcelorMittal's operating experience since these systems were put into operation in mid-2010 has been that zero discharge has been sustained on a continuous basis. As of this writing, there has only been one day of discharge from the continuous caster system and none from the vacuum degasser system. The draft

NPDES permit establishes new internal NPDES compliance monitoring stations at the discharge from each system: Outfall 701 – vacuum degasser; Outfall 702 – continuous caster. Each treatment system is equipped with an NPDES permit compliance monitoring station comprising primary and secondary flow monitoring devices and an automatic 24-hour composite sampler. The draft permit specifies twice per week monitoring at Outfalls 701 and 702 (see pp. 15 and 16 of 77). Also, the draft permit contains the following footnote for Outfall 701, and the same footnote for Outfall 702:

> *"[1] The above identified effluent limitations are only applicable when the discharge does not get directed to the BOF and discharges through Internal Outfall 701."*

In effect, this footnote means that for compliance determinations ArcelorMittal can only consider monitoring data for days of discharge through Outfalls 701 or 702. It is possible that ArcelorMittal could have a discharge on only one day of a month that is less than an applicable daily maximum effluent limit, but greater than the corresponding monthly average limit. This would put ArcelorMittal in jeopardy of being charged with violating the 30-day average effluent limit, when in fact the actual monthly average discharge would have been far less than the respective monthly average effluent limit owing to the days with zero discharge. There is no regulatory basis for this provision and it would be counterproductive to include it in the renewal NPDES permit for Indiana Harbor West Outfalls 701 and 702.

To remedy this situation, ArcelorMittal requests that the above footnote be deleted from the final NPDES permit for Outfalls 701 and 702, and that ArcelorMittal be authorized to count scheduled monitoring days with zero discharge as "zero" for purposes of calculating the monthly average discharge to evaluate compliance with the applicable monthly average effluent limits. This is consistent with the definition of *average monthly discharge limitation* contained in the NPDES permit regulations at 40 CFR §122.2:

> *"Average monthly discharge limitation means the highest allowable average of "daily discharges" measured during a calendar month, calculated as the sum of all "daily discharges" measured during a calendar month divided by the number of "daily discharges" measured during that month."*

For the example cited above, there would be one day of discharge during a month and no discharges on the other seven days that month when monitoring would be required with a twice per week monitoring frequency. The *sum of the daily discharges* would be the sum of the monitoring result measured on the day of actual discharge and seven zeros. The *number of daily discharges measured during that month* would be eight (i.e., the measurement for the actual discharge day and seven measurements of zero). This approach is clearly within the NPDES permit regulations.

Furthermore, the federal effluent limitations guidelines at 40 CFR Part 420 are based on the premise that the discharger is free to install any technology of its choosing to comply with NPDES permit effluent limits derived from the effluent limitations guidelines.[1] In this case, ArcelorMittal elected to go beyond minimum

ED_002857_00000137-00167

national standards and achieve zero discharge. The technologies and operating practices ArcelorMittal employs to achieve zero discharge clearly fall within the construct of the effluent limitations guidelines program and are entirely consistent with one of the principal goals of the Clean Water Act. The footnotes noted above for Outfalls 701 and 702 must be removed from the NPDES permit and ArcelorMittal must be allowed to consider monitoring days with zero discharge as zero for determining compliance with monthly average effluent limits.

In the alternative, IDEM could remove the footnotes and the monthly average limits for Outfalls 701 and 702 from the permit on the basis that ArcelorMittal has demonstrated that there is no routine discharge. The flow monitoring requirement could remain to demonstrate that there is no discharge flow and, if things would unexpectedly change, provide IDEM with the data to modify the permit at a later date to include the monthly average limits.

The continued imposition of monthly average limits at Outfalls 701 and 702 is truly a form of command and control that demonstrates a lack of ingenuity and belies the stated goals of the Clean Water Act. Rather than rewarding a facility for achieving the goal of "zero discharge" to protect the environment, the proposed footnote and the monthly average limits would actually encourage ArcelorMittal to create a low-volume discharge each monitoring day so that analytical measurements can be made and low mass discharges can be calculated to demonstrate compliance with effluent limits for each limited pollutant. In effect, IDEM would be encouraging discharges of pollutants that would otherwise not occur. ArcelorMittal requests that IDEM delete the proposed footnote cited above for Outfalls 701 and 702 and specifically authorize using zero for monitoring days with no discharge for calculation of monthly average discharges; or, delete the monthly average effluent limits at Outfalls 701 and 702. We believe IDEM should encourage innovative approaches to achieve "zero discharge".

[1] See Development Document for Effluent limitations Guidelines and Standards for the Iron and Steel Manufacturing Point Source Category, Vol. I (EPA 440/1-82/024, May 1982), p. 87.

> *"The limitations neither require the installation of any specific control technology nor the attainment of any specific flow rate or effluent concentration. Various treatment alternatives or water conservation practices can be employed to achieve a particular effluent limitation and standard. The model treatment systems presented in the development document illustrate one means available to achieve the limitations and standards. In most cases, other technologies or operating practices are available to achieve the limitations and standards."*

Response 15: IDEM commends ArcelorMittal for installing treatment systems in the spirit of going above and beyond the minimum national standards. The development document citation footnoted above allows openness for the design of treatment technologies to "achieve the limitations and standards" for the corresponding wastestreams. Therefore, the system installed by the facility should meet the applicable limitations and standards. It should be noted that the above mentioned comment would not be an issue if this system was truly a "zero discharge" system. If this was a zero discharge system, the limitations and standards would

not be applicable as there would not be a discharge of those wastestreams to waters of the state.

In addition, the definition identified above from 40 CFR 122.2 implies that the use of zeros on days of no discharge is not an acceptable method of calculating the monthly average value. As noted above, the monthly average is "*...calculated as the sum of all "daily discharges" measured during a calendar month divided by the number of "daily discharges" measured during that month.*" In this definition, the use of the word "measured" appears to negate the assumption that alternate values can or should be used.

No changes are necessary at this time.

Comment 16: **SECTION 301(g) EFFLUENT LIMITS: OUTFALLS 509, 009, 010 AND, 011**

ArcelorMittal request that the following condition to allow modification of Section 301(g) effluent limits for ammonia-N and total phenols be included in the Indiana Harbor West NPDES permit for Outfalls 509, 009, 010 and 011:

> *"At any time during the term of this NPDES permit, the permittee may request modification of Section 301(g) effluent limits for ammonia-N and total phenols. Such modified limits may be applied at Outfalls 509, 009, 010 and 011, or any combination thereof."*

The above condition is similar to one included in the NPDES permit for ArcelorMittal Burns Harbor LLC that IDEM recently renewed.

Response 16: The above mentioned changes have been incorporated as one of the reopening provisions found in Part I.J of the permit.

Comment 17: **MINIMUM LEVEL (ML) for 2,3,7,8-TCDF**

The description of the Minimum Level (ML) for 2,3,7,8-TCDF in footnote [3] on page 8 of the permit correctly states the ML concentration as 10 picograms per liter (pg/L). However, the parenthetical clause at the end of this footnote identifies pg/L as parts per trillion (ppt) instead of parts per quadrillion (ppq). ArcelorMittal requests the NPDES permit be corrected as noted above.

Response 17: The above mentioned changes have been made.

Ms. Jeanette Neagu, President, Save the Dunes and Mr. Lyman C. Welch, Water Quality Program Manager, Alliance for the Great Lakes submitted the following comments. Mr. Jesse Kharbanda, Executive Director, Hoosier Environmental Council, submitted a letter supporting the joint comments submitted by Save the Dunes and the Alliance for the Great Lakes.

Comment 18: **Chromium Issues**

Health effects that can result from exposure to hexavalent chromium (also known as hex chromium or chromium-VI) include damage to the nose; anemia; intestinal and stomach damage; and cancer. The State of California is so

concerned about this parameter that it has set a very low detection limit of 0.02 µg/L.

In 2010, ArcelorMittal West (TRI ID 46312LTVST3001D) reported through the Toxic Release Inventory (TRI) that 890 pounds of chromium compounds were discharged to the water, one of the highest amounts of chromium discharges reported in the Great Lakes Basin. IDEM has indicated that this chromium is removed from the wastewater in the Central Wastewater Plant and taken offsite for disposal, as might be evidenced by the 23,000 pounds of chromium compounds reported in the 2010 TRI as removed through this method. As a result of it being removed in the Central Plant, a specific provision was included in all of the permits that prohibits the discharge of chromium at any of the outfalls.

We don't know if it was an oversight or intentional, but there is nothing in these permits that requires monitoring to make sure this prohibition is being followed, making enforcement more difficult. This is particularly important since they have reported discharging 890 pounds of chromium compounds directly to the water as late as 2010.

A continuous monitoring system for chromium compounds should be required in all the permits where chromium discharges are prohibited. Recent studies and media coverage of detections of chromium-6 in tap water, in addition to EPA's current efforts to conduct human health risk assessments, also support the need for monitoring protocols for chromium in this permit. This is especially important because hexavalent chromium is more soluble and more mobile than the more naturally occurring chromium III, and also enters the water through airborne sources in the plant.

Response 18: While many facilities base their TRI data on monitoring data, others report estimated data to TRI, as the TRI program does not mandate monitoring. Various estimation techniques can be used when monitoring data are not available, and EPA has published estimation guidance for the regulated community. Variations between facilities can result from the use of different estimation methodologies. These factors should be taken into account when considering data accuracy and comparability. It is also incorrect to equate the chromium compounds listed in the TRI as hexavalent chromium.

However, IDEM acknowledges the importance of verifying that hexavalent chromium is not being discharged from these facilities. Where required by federal effluent guidelines, total chromium limitations have been included in the proposed permits. Additionally, a prohibition against discharging wastewaters containing hexavalent chromium has been included in the proposed permit at potentially affected outfalls. IDEM will add hexavalent chromium monitoring at the potentially affected outfalls (Central Wastewater Treatment Plant) at a reasonable frequency in order to confirm that hexavalent chromium is not being discharged. IDEM doesn't require monitoring for "chromium compounds" as there are no water quality standards upon which to establish effluent limitations for "chromium compounds".

ED_002857_00000137-00170

Comment 19: **Some Parameters May be Missing**

With respect to toxic pollutants, Clean Water Act Section 301 requires that NPDES permits "shall require application of "Best Available Technology" (BAT) to reduce pollutant discharges to the maximum extent "technologically and economically achievable," including "elimination of discharges of all pollutants" if it is achievable. Federal regulations promulgated by USEPA also require that "technology-based treatment requirements under Section 301(b) of the CWA represent the minimum level of control that must be imposed" in a NPDES permit. BAT is a stringent treatment standard that has been held to represent "a commitment of the maximum resources economically possible with the ultimate goal of eliminating all polluting discharges."

Technology-based effluent limitations (TBELs) are a necessary minimum requirement for a permit "regardless of a discharge's effect on water quality." Federal regulations require state permitting authorities to establish BAT effluent limits in individual NPDES permits on a case-by-case basis, using Best Professional Judgment (BPJ), "to the extent that EPA-promulgated effluent limitations are inapplicable." The use of the word "shall" in both the federal statute and regulations does not leave IDEM with any discretion as to whether TBELs should be established. Instead, TBELs must be established for every parameter reported in the TRI data. It is our contention that IDEM must set TBELs for all pollutants by determining BAT. Even if the ArcelorMittal facility is not discharging these pollutants in amounts that would implicate the applicable water quality standard or require a WQBEL, the Clean Water Act still requires that they be subject to TBELs.

The Clean Water Act requires that "the discharge of any pollutant by any person shall be unlawful" except, in pertinent part, if it is authorized by a NPDES permit. The Act further defines "discharge of a pollutant" to mean "any addition of any pollutant to navigable waters from any point source." Requiring effluent limitations for even small discharges of pollutants is consistent with the Clean Water Act's statutory goal of "elimination of discharges of all pollutants."

Accordingly, although some pollutants reported in ArcelorMittal's TRI reports may only be discharged in small amounts, they still constitute "discharges of a pollutant" that are illegal under the Clean Water Act unless subject to appropriate TBELs. IDEM needs to review the TRI and revise the draft permit to incorporate such missing TBELs before ArcelorMittal's NPDES permits can be lawfully renewed.

Response 19: For the reasons outlined in Response #18, the TRI is not appropriate data source for establishing permit effluent limitations.

Development of limitations for every possible pollutant which could potentially be present in the discharge is not feasible. Technology based effluent guidelines are not always established for every pollutant present in a point source discharge. In many instances, EPA promulgates effluent guidelines for an *indicator* pollutant or pollutants. Industrial facilities that comply with the effluent guidelines for the indicator pollutant(s) will also control other pollutants (e.g., pollutants with a similar chemical structure). For example, EPA may choose to regulate only one of several metals present in the effluent from an industrial category, and compliance with the effluent guidelines will ensure that similar

metals present in the discharge are adequately controlled. Additionally, for each industry sector EPA typically considers whether a pollutant is present in the process wastewater at treatable concentrations and whether the model technology for effluent guidelines effectively treats the pollutant.

Comment 20: **Mercury Issues**

One of the most serious concerns we have with this permit is the schedule of compliance proposed for this facility to meet new effluent limitations for mercury. Mercury is an especially dangerous parameter of concern since it bioaccumulates in fish tissue, and can adhere to sediments in all the affected water bodies. Lake Michigan, in particular, does not have a ready ability to heal itself as it takes more than 90 years for its waters to recycle and turn over. In addition, more than adequate studies have been done that prove that sediments in this area contain conditions that are sufficient to alter the chemical composition of fish tissues to the extent that the human uses of fishery resources in that area are adversely affected. (http://www.fws.gov/midwest/GrandCalumetRiverNRDA/documents/Volume1.pdf)

While the Great Lakes Initiative (GLI) allows Indiana to provide flexibility on compliance schedules, the key words are "shall not exceed five years or the term of the NPDES permit, whichever is less." That does not automatically mean that 54 months (4.5 years) is the standard amount of time granted. The effluent limitations should come as no surprise to ArcelorMittal, and we just don't see why it should take 54 months to ramp up to meet the standards.

It is our understanding that, as soon as the permit is approved, ArcelorMittal must in order of sequence:

1. Develop a Quality Assurance Project Plan (QAPP) within three months that identifies sources of mercury in the wastewater being treated.
    - It is our belief that this QAPP should take into account a mass balance study of all sources of mercury including air, water and solid waste such as secondary wastewater sludge.
    - Once the QAPP is approved by IDEM, how much time will then be allotted to identify those sources? Is it possible to negotiate this timeline within the permit?
    - Will the QAPP be made available for comment by the public?

2. Then develop a Final Plan for Compliance (FPC) to achieve compliance with the final effluent limits.
    - Will there be an opportunity for public comment on the FPC?

3. Implement the FPC within 24 months.
    - 24 months seems too long. We request that the FPC be implemented in 12 months.

We also want to have some assurances that there is a high degree of certainty that all these plans and schedules are realistic and achievable.

ED_002857_00000137-00172

Response 20: Part I.F of the permit outlines the procedure for achieving compliance with the final effluent limitations for mercury. That section dictates that the permittee submit a QAPP report to IDEM no later than 3 months from the effective date of this permit outlining, among other things, the methods with which the permittee will identify sources of mercury. Another report is due no later than 15 months of the effective date of this permit that includes the previous 12 months sampling data for mercury and any pollution prevention activities implemented. A second QAPP report is due no later than 27 months from the effective date of this permit that includes the previous 24 months sampling data for mercury, an evaluation of the pollution prevention activities and treatment technologies, any additional control measures put in place since the last report, and the anticipated date when the permittee will submit the FPC.

The proposed FPC will contain the source identification report and a plan for implementing any pollution prevention or treatment technologies to achieve compliance with the final effluent limitation for mercury no later than 30 months from the effective date of this permit. Follow-up reports are due no later than 39 and 48 months, respectively, identifying progress and milestones contained in the FPC. The permittee shall comply with the final effluent limitations for mercury as soon as possible, but no later than 54 months from the effective date of this permit.

The QAPP and FPC will become public documents. However, they will not be placed on Public Notice for review and comment by the public.

IDEM believes that implementing the FPC in 12 months is not a reasonable expectation due to the comprehensive analysis and critical examination required to be performed as part of the Schedule of Compliance and associated reports.

Comment 21: **Missing Total Maximum Daily Loads (TMDLs)**
It is amazing to Save the Dunes and the Alliance for the Great Lakes that IDEM reportedly spent $1 million to complete TMDL assessments on the Grand Calumet in 2001, and then never developed the TMDLs. Wasteload allocations used throughout all the permits are not sufficient because they are looking at parameters on a case-by-case basis and not the whole stream. You are not considering the other sources that might be contributing to impairments in the entire AOC.

We request that the necessary TMDLs be developed prior to the next renewal for these permits; and we invite IDEM and USEPA to work with Save the Dunes to make sure this happens, just as we are working together to develop TMDLs for the Salt Creek Watershed. TMDLs are a critical step to resolving impairments in the AOC; impairments that have far-reaching consequences beyond the AOC into Lake Michigan – and also impact a visitor's ability to enjoy the Indiana Dunes National Lakeshore.

Response 21: The IDEM Permitting Branch agrees that TMDLs are a critical step to resolving impairments in the AOC. There are many extenuating circumstances to be taken into consideration for TMDL approval. The Permitting Branch has no control over if and when TMDLs are developed and approved and must work with the most recent and applicable resources at their disposal.

ED_002857_00000137-00173

In the event TMDLs have been developed and approved for the waterbodies which receive discharges from these ArcelorMittal facilities during the next permit renewal cycle, the information will be taken into consideration during the development of water quality based effluent limits and completion of RPE analyses. IDEM encourages Save the Dunes and other organizations to keep working with IDEM and EPA on projects such as the development of TMDLs.

Comment 22: **Thermal Concerns**
While we appreciate the in-stream sampling and modeling that has been done to prove that ArcelorMittal does not have a reasonable potential to exceed a water-quality criterion for temperature, it is our contention that continuous in-stream monitoring should be required as opposed to grab sampling. Grab samples are only as good as the sample. This is especially important since the Clean Water Act requires the permittee to demonstrate that the balanced indigenous community of aquatic organism is protected and maintained. We also need to know if US Fish and Wildlife, DNR and other staff were consulted during this study because thermal concerns have a major impact on impairments in the AOC.

Response 22: Based on multi-discharger thermal model, the discharges from these ArcelorMittal facilities do not have a reasonable potential to exceed a water quality criterion for temperature. Therefore, continuous monitoring is not justifiable. Under 5-2-11.5(e), the commissioner may require monitoring for a pollutant of concern even if it is determined that a WQBEL is not required based on a reasonable potential determination, therefore monitoring for temperature and thermal discharge was included in this permit. IDEM believes that sampling twice weekly at the selected outfalls and intakes is sufficient to provide representative data of the temperature output from the outfalls.

Comment 23: **Typographical Error**
On page 43, item #4, line #3 of the West permit, it should say "prevention," not "prevent."

Response 23: The above mentioned changes have been made.

Comment 24: **Procedure for Whole Effluent Toxicity**
An overall goal of the GLI is to have consistency among the Great Lake States. We understand that USEPA disapproved Indiana's WET procedure in 2000 and therefore WET testing procedures in this permit must conform to EPA guidance and national standards in 40 C.F.R. 122.44(d)(1). IDEM must ensure that the WET procedures described in the permit comply with these federal standards to USEPA's satisfaction.

Response 24: IDEM's current WETT requirements have been reviewed and approved by IDEM's Toxicologist. US EPA has reviewed the WETT requirement as well and has no objections. Therefore, IDEM is confident that the program complies with federal standards to USEPA's satisfaction.

ED_002857_00000137-00174

Comment 25: **Discharges to Lagoons and Ponds**
In the West unit permit Citizen's Summary (and also the Fact Sheet), there is discussion of Internal Outfall 111 and 211 discharging to the North Lagoon (see p. 9). Are these unlined "treatment facilities" or wetlands? Also, it is not clear what the North Pond on page 9 is referring to under Outfall 012 of the Citizen's Summary. Should this have said instead "North Lagoon?"

Response 25: The North Lagoon is considered a treatment facility. Page 9 of the Citizen's Summary mentioned above should have identified it as such, not the North Pond.

Comment 26: **Impact of New Treatment Systems**
On Citizen's Summary on the West facility permit (p. 8) it is noted that two new treatment systems have been installed for treatment of wastewaters from the vacuum degasser and continuous casting operations. Have these treatment systems led to improved water quality through more stringent pollution controls, which will be regulated at Outfalls 701 and 702?

Response 26: The new treatment systems at Internal Outfalls 701 and 702 were installed to specifically treat those respective wastestreams. The permittee installed these treatment systems to meet the BAT limitations from the federal effluent guidelines. It can be assumed that the installation of these facilities will aid in achieving the objectives of the CWA. Furthermore, the facility designed the treatment systems to achieve 'zero discharge'. This means that during normal conditions, there will be no discharge from these sources. However, stating that the use of these systems has definitively led to improved water quality lacks some qualifying statements (i.e. at the effective outfall, in the receiving water, in the general region, etc.).

Comment 27: **Bypasses**
On page 9 of the Citizen's Summary for the West facility it mentions that potentially 12% of Outfall 012 bypasses the No. 3 intake and directly enters the waters of the state. Please explain how this particular, daily, ongoing bypass is lawful.

Response 27: The of the use of the word 'bypass', as identified in the above mentioned comment, was poorly chosen. It should be noted that this does not imply a bypass as defined by NPDES standards. What was attempted to be conveyed in the Citizen's Summary was that approximately 12% of the effluent from Outfall 012 could potentially enter the waters of the state as opposed to being re-circulated through the facility via the No. 3 intake. The permittee is required to comply with the bypass conditions as outlined in Part II.B.2 of the permit.

Comment 28: **Phenols**
Save the Dunes and the Alliance for the Great Lakes would like to applaud IDEM for proposing that the variance request for phenol (4AAP) not be renewed in the West facility permit as stated in the Citizen's Summary and at the IDEM presentations. It does not appear that this same denial was in the other permits, however. Please clarify that for us.

ED_002857_00000137-00175

Response 28: This comment incorrectly states that the phenols variance wasn't renewed in the West permit. The 301(g) variance request for phenols was renewed in the Indiana Harbor West permit. The variance for phenols was ***not*** renewed in the Indiana Harbor East permit. The variance renewal for the West facility was approved based on a review of the data available and the other qualifying factors identified in section 301(g) of the CWA.

Comment 29: In addition, we are wondering if any consideration might be given to using carbon filters in all the control technologies to reduce phenol pollution. For example, in the East Facility Permit, it is our understanding phenols are controlled using carbon filters that the blow down from Nos. 5 & 6 blast furnace recycled system is treated through clarifiers for solids remove and carbon filtration to control phenols and is then discharged to the Main Plant Recycle System through internal Outfall 613.

Response 29: The facility requested a 301(g) variance which is allowed under the CWA. This variance was previously granted and ArcelorMittal requested it to be renewed as part of this permit renewal. The appropriate documentation was submitted and reviewed by IDEM and based upon the federal requirements IDEM has incorporated the existing 301(g) variance in the West permit. This has been tentatively approved by EPA.

Mr. Jim Sweeney, President, Izaak Walton League, PCC (Porter County Chapter), submitted the following comments.

Comment 30: **Chromium**

ArcelorMittal reported through the Toxic Release Inventory (TRI) that 890 pounds of chromium compounds were discharged to the water of Lake Michigan. Reportedly it is removed from the wastewater and a provision was included in each of the permits that prohibit the discharge of chromium at any of the outfalls.

This is welcome but we have found no requirement that calls for monitoring to make sure this happens. A monitoring system should be required in all the permits where chromium discharges are prohibited.

Response 30: Please refer to responses #18 and #19 above to comments submitted by Save the Dunes and the Alliance for the Great Lakes.

Comment 31: **Mercury**

Mercury is an especially dangerous toxin because it bioaccumulates in fish tissue and can adhere to sediments in water bodies. One of the most serious concerns we have with this permit is the schedule of compliance for these facilities to meet new effluent limitations for mercury.

We request that these new permits include a Final Plan for Compliance that will be implemented in 24 months that addresses all sources of mercury pollution.

Response 31: Please refer to response #20 above comments submitted by Save the Dunes and the Alliance for the Great Lakes.

Comment 32: **Total Maximum Daily Loads (TMDLs)**
IDEM reportedly spent $1 million to complete TMDL assessments on the Grand Calumet in 2001, and then did not develop the TMDLs. Waste load allocations used in these permits are not sufficient because they are looking at individual parameters on a case-by-case basis and not the whole stream. Refer to the definition of TMDL. All sources must be considered.

TMDLs need to be developed prior to the next renewal for these permits. They are a critical step to resolving impairments in the AOC.

Response 32: Please refer to response #21 above comments submitted by Save the Dunes and the Alliance for the Great Lakes.

Comment 33: **Other Concerns**
The permits should require constant monitoring of all outfalls due to the potential for serious discharges for the entire range of pollutants and chemicals used at Arcelor Mittal. The Clean Water Act requires the permittee to show the ecology of the receiving waterway is protected.

Any impact of thermal discharge needs to be documented and corrected.

Section 301 of the Clean Water Act requires that NPDES permits "shall require application of "Best Available Technology" to reduce discharges to the extent "technologically and economically achievable," including "elimination of discharges of all pollutants" if it is achievable.

The Clean Water Act requires that "the discharge of any pollutant by any person shall be unlawful" except if authorized by a NPDES permit. The Act further defines "discharge of a pollutant" to mean "any addition of any pollutant to navigable waters from any point source." Requiring effluent limitations for even small discharges of pollutants is consistent with the Clean Water Act's statutory goal of "elimination of discharges of all pollutants."

Arcelor Mittal and the other factories have come a long way but still have a long way to go. Lake Michigan does not belong to them, it belongs to the public and your job is to make sure this incredible resource is protected for our use and for future generations.

Response 33: Constant monitoring for all outfalls for all pollutant and all chemicals is not feasible. In addition, the permittee demonstrates compliance with the CWA by taking representative samples of the discharge on a routine basis.

Mr. Ted Oberc, Concerned Citizen, submitted a written statement on the issuance of the permit. IDEM hereby acknowledges receipt of Mr. Oberc's written statement, and is appreciative of his participation. IDEM made no to changes to either the permit or fact sheet in response, but took all comments into consideration.

ED_002857_00000137-00177

During the public hearing, held in Gary, Indiana, on September 15, 2011, statements were read by Mr. Kevin Doyle, Environmental Manager, ArcelorMittal and Mr. Patrick Gorman, Indiana Steel Environmental Group Facilitator. Transcripts of the statements can be found at http://www.in.gov/idem/5338.htm

ED_002857_00000137-00178

Attachment A

Water Quality Assessment

Use Classifications

The Indiana Harbor Canal and Indiana Harbor are designated for full-body contact recreation and shall be capable of supporting a well-balanced, warm water aquatic community. The Indiana Harbor is designated as an industrial water supply. Indiana regulation at 327 IAC 2-1.5-2(64) defines the open waters of Lake Michigan as the following:

"...all of the waters within Lake Michigan lakeward from a line drawn across the mouth of tributaries to the lake, including all waters enclosed by constructed breakwaters. For the Indiana Harbor Ship Canal, the boundary of the open waters of Lake Michigan is delineated by a line drawn across the mouth of the harbor from the East Breakwater Light (1995 United States Coast Guard Light List No. 19675) to the northernmost point of the LTV Steel property along the west side of the harbor."

The northernmost point of the LTV Steel (now ArcelorMittal Indiana Harbor West) property is the breakwall along the west side of the harbor. On the west side of the northernmost point of this breakwall is the inlet of a mile long channel that serves as the source of water for the ArcelorMittal Indiana Harbor West No. 2 and No. 3 water intakes. Based on the above definition, this channel was considered the open waters of Lake Michigan. The Indiana portion of the open waters of Lake Michigan is designated for full-body contact recreation; shall be capable of supporting a well-balanced, warm water aquatic community; is designated as salmonid waters and shall be capable of supporting a salmonid fishery; is designated as a public water supply; is designated as an industrial water supply; and, is designated as an outstanding state resource water. These waterbodies are identified as waters of the state within the Great Lakes system. As such, they are subject to the water quality standards and associated implementation procedures specific to Great Lakes system dischargers as found in 327 IAC 2-1.5, 327 IAC 5-1.5, and 327 IAC 5-2.

Section 303(d) of the Clean Water Act requires states to identify waters, through their Section 305(b) water quality assessments, that do not or are not expected to meet applicable water quality standards with federal technology based standards alone. States are also required to develop a priority ranking for these waters taking into account the severity of the pollution and the designated uses of the waters. Once this listing and ranking of impaired waters is completed, the states are required to develop Total Maximum Daily Loads (TMDLs) for these waters in order to achieve compliance with the water quality standards. Indiana's 2010 303(d) List of Impaired Waters was developed in accordance with Indiana's Water Quality Assessment and 303(d) Listing Methodology for Waterbody Impairments and Total Maximum Daily Load Development for the 2010 Cycle. As of the 2010 303(d) List of Impaired Waters, the following impairments were listed for waters to which the permittee discharges:

ED_002857_00000137-00180

Table 1

Assessment Unit	Waterbody	Impairments	ArcelorMittal West Outfalls
INC0163_T1001	Indiana Harbor Canal	Impaired Biotic Communities, Oil and Grease, *E. coli* and PCBs in Fish Tissue	002, 009 and 010
INC0163G_G1078	Indiana Harbor	Free Cyanide, Mercury in Fish Tissue and PCBs in Fish Tissue	011
INM00G1000_00	Lake Michigan	Mercury in Fish Tissue and PCBs in Fish Tissue	012

Water Quality Based Effluent Limitations

The NPDES permit for ArcelorMittal Indiana Harbor West was last renewed in 1986 and expired in 1991. Water quality-based effluent limitations (WQBELs) were not applied to any outfall in the 1986 permit, but WQBELs for Total Residual Chlorine were included in a 1991 permit modification at Outfalls 002, 009, 010 and 011. The WQBELs for Total Residual Chlorine were calculated using water quality criteria that became effective in 1990. The 1986 permit did include limits for Ammonia-N and Phenols (4AAP) at Outfalls 009, 010 and 011 based on a 301(g) variance. The limits based on the variance were more stringent than the WQBELs that would apply to each outfall. The WQBELs for Ammonia-N and Phenols (4AAP) that applied to Outfalls 009, 010 and 011 were included in the October 1984 HydroQual report "Grand Calumet River Wasteload Allocation Study." This wasteload allocation study included a multi-discharger model for the Indiana Harbor Watershed (Grand Calumet River (East and West Branches), Indiana Harbor Canal and Indiana Harbor).

The 1992 Grand Calumet River – Indiana Harbor Ship Canal Wasteload Allocation Study was completed after the NPDES permit for ArcelorMittal Indiana Harbor West expired in 1991. The 1992 wasteload allocation was based on the 1990 Indiana water quality standards (new water quality criteria and an upgraded use designation for the Grand Calumet River and Indiana Harbor Canal) and a multi-discharger model that included the Indiana Harbor Watershed and portions of Lake Michigan around the Indiana Harbor. Pollutants selected for the wasteload allocation were based on water quality concerns at the time. Specific allocations for Total Cyanide and Phenols (4AAP) were assigned to Outfalls 009 and 010 and specific allocations for Ammonia-N, Total Cyanide, Fluoride, Sulfate, Phenols (4AAP), Lead and Zinc were assigned to Outfall 011 as part of the wasteload allocation. The results of the 1992 wasteload allocation were not incorporated in a permit renewal for ArcelorMittal Indiana Harbor West.

New regulations in Indiana governing the development of water quality-based effluent limitations for discharges to waters within the Great Lakes system became effective in 1997. The regulations were developed in accordance with the Water Quality Guidance for the Great

Lakes System at 40 CFR Part 132. The regulations included new water quality criteria and methodologies for developing water quality criteria (327 IAC 2-1.5), and procedures for calculating wasteload allocations (WLAs) (327 IAC 5-2-11.4), making reasonable potential to exceed determinations (5-2-11.5) and developing water quality-based effluent limitations (WQBELs) (5-2-11.6). These regulations are applicable to individual pollutants and to whole effluent toxicity. The application of whole effluent toxicity requirements to ArcelorMittal is included in a later section. Due to the new regulations, a different approach was warranted in determining the need for and establishing WQBELs in the Grand Calumet River, Indiana Harbor Canal and Indiana Harbor.

The 1992 multi-discharger model included a hydrodynamic component and a water quality component and was able to simulate instream dissolved oxygen concentrations. The model also accounted for flow stratification in the Indiana Harbor Canal and Indiana Harbor and the intrusion of lake water into the Indiana Harbor Canal. The model did not restrict any point source discharges based on mixing zones. The development of a hydrodynamic model for the whole watershed is a resource intensive effort that still requires IDEM to develop wasteload allocations for each outfall to be used as inputs into the model. The 1997 Great Lakes rules added additional requirements for the development of wasteload allocations that were not required in previous modeling efforts. The antidegradation implementation provisions included in the 1997 Great Lakes rules also added an additional level of scrutiny to the incorporation of wasteload allocations developed through the new regulations into NPDES permits.

A review of the 2010 303(d) list shows that there are no pollutants on the list that have the potential to impact wasteload allocation analyses conducted for the renewal of NPDES permits for dischargers on a whole watershed basis. The new listing for Free Cyanide in the Indiana Harbor could potentially impact discharges to the Indiana Harbor Canal and Indiana Harbor. The listing is based on Free Cyanide data collected during the years 2000 and 2001 at IDEM fixed station IHC-0 in the Indiana Harbor. The aquatic life criteria for cyanide were changed from Total Cyanide to Free Cyanide in the 1997 Great Lakes rulemaking. It is IDEM current practice to monitor for Total Cyanide at fixed stations and analyze samples for Free Cyanide only when Total Cyanide data show a reportable concentration (> 5 ug/l). After 2001, data collected at fixed station IHC-0 no longer showed any reportable values for Total Cyanide so Free Cyanide data were not collected. Based on the 2010 listing methodology, the Total Cyanide data could not be used to assess the Indiana Harbor for Free Cyanide. The Indiana Harbor Canal was not listed for Free Cyanide on the 2010 303(d) list due to the two IDEM fixed stations in the Indiana Harbor Canal (located upstream of fixed station IHC-0 at Columbus Avenue and Dickey Road) not showing impairment for Free Cyanide. Total Cyanide is reported at many of the steel mill outfalls in the Indiana Harbor Canal and Indiana Harbor due to technology-based effluent limits (TBELs) for this parameter, but little data for Free Cyanide are available. Therefore, in the NPDES permit renewals, monitoring for Free Cyanide will be required at steel mill outfalls that have process wastewater for use in an assessment of reasonable potential. These data can also be used along with Total Cyanide data at fixed station IHC-0 and data collected in the Indiana Harbor Canal to reassess the impairment for Free Cyanide.

Therefore, a whole watershed model is not required at this time to develop permit requirements to address any TMDL related issues. There is currently not a need to develop WLAs for

ED_002857_00000137-00182

pollutants that impact the instream dissolved oxygen so a whole watershed hydrodynamic model is not needed for this purpose. There are several items that have occurred in the Indiana Harbor watershed since the 1992 model was developed that can be used to help establish a reasonable approach, other than a whole watershed model, to develop WLAs for discharges in the watershed. The number of dischargers to the Indiana Harbor watershed has decreased, the number of steel mill outfalls has decreased and the discharge volume at many of the remaining steel mill outfalls has decreased. U.S. Steel Gary Works dredged the five mile stretch of the East Branch Grand Calumet River along their property in 2003. Dredging of portions of the West Branch Grand Calumet River west of Indianapolis Boulevard began in December 2009. Data for a variety of parameters have been collected on a monthly basis by IDEM at several fixed water quality monitoring stations in the watershed. Three stations are located on the East Branch Grand Calumet River, one on the West Branch Grand Calumet River, two on the Indiana Harbor Canal, one on Lake George Canal and one on the Indiana Harbor. The U.S. Geological Survey (USGS) installed a stream gage in the Indiana Harbor Canal in 1991 that can be used to determine the Q7,10 and other stream flow statistics of the Indiana Harbor Canal. An intensive instream sampling effort along with effluent sampling of major dischargers occurred in July 1999 and April 2000 as part of the Grand Calumet River TMDL Study.

Taking into consideration the above information, it was decided to divide the Indiana Harbor watershed into three subwatersheds and determine the need for and establish water quality-based effluent limitations on a subwatershed basis. In this approach, the background concentration for each subwatershed is determined using instream water quality data instead of concentrations determined through whole watershed modeling. During the development of the wasteload allocation for the U.S. Steel Gary Works (IN0000281) NPDES permit that was renewed January 22, 2010, the Indiana Harbor watershed was divided into the following three subwatersheds: East Branch Grand Calumet River, West Branch Grand Calumet River (the portion that flows east into the Indiana Harbor Canal) and the Indiana Harbor Canal/Lake George Canal/Indiana Harbor. The analysis for the East Branch Grand Calumet River is included in the Fact Sheet of the U.S. Steel Gary Works 2010 permit. The analysis for the West Branch Grand Calumet River will be conducted as part of the NPDES permit renewals for the Hammond Sanitary District (IN0023060) and the East Chicago Sanitary District (IN0022829).

The subwatershed model for the Indiana Harbor Canal/Lake George Canal/Indiana Harbor included ArcelorMittal Indiana Harbor – Indiana Harbor West which has three active outfalls to the Indiana Harbor Canal, one active outfall to the Indiana Harbor, and one water intake in the Indiana Harbor near the mouth of the Indiana Harbor Canal. The other major dischargers included in the subwatershed model are as follows in relation to the ArcelorMittal Indiana Harbor West facility: ArcelorMittal USA - Indiana Harbor Long Carbon (IN0063355) which has one active outfall upstream to the Indiana Harbor Canal; ArcelorMittal Indiana Harbor East which has one active outfall, consisting of groundwater and stormwater, that discharges directly to the Indiana Harbor Canal, and three active outfalls that discharge directly to the Indiana Harbor; and, ArcelorMittal Indiana Harbor – Central Wastewater Treatment Plant (IN0063711) which has one active outfall upstream to the Indiana Harbor Canal. The discharges from all these facilities were taken into consideration in determining the need for and establishing WQBELs for the discharges from the ArcelorMittal Indiana Harbor West outfalls.

ED_002857_00000137-00183

The procedures under 5-2-11.4 may be used to establish TMDLs, wasteload allocations in the absence of TMDLs and preliminary wasteload allocations. These procedures apply to the discharges to the Indiana Harbor Canal/Lake George Canal/Indiana Harbor. A TMDL has not been completed for the Assessment Units for the Indiana Harbor Canal and Indiana Harbor receiving the discharges from ArcelorMittal and a TMDL is not required for any of the pollutants of concern being considered in the wasteload allocation analysis. Therefore, the procedures under 5-2-11.4 were used to develop preliminary wasteload allocations and wasteload allocations in the absence of a TMDL.

Wasteload allocations in the absence of TMDLs are developed to establish water quality-based effluent limitations under 5-2-11.6 and preliminary wasteload allocations are developed to make reasonable potential determinations under 5-2-11.5. The reasonable potential procedures under 5-2-11.5 include provisions for making reasonable potential determinations using best professional judgment (5-2-11.5(a)) and using a statistical procedure (5-2-11.5(b)). The statistical procedure is a screening process in which a projected effluent quality (PEQ) based on effluent data is calculated and compared to a preliminary effluent limitation (PEL) based on the preliminary wasteload allocation. Both the best professional judgment and statistical procedures were used to establish the need for water quality-based effluent limitations to protect the designated uses of the Indiana Harbor Canal, Indiana Harbor, and Lake Michigan.

A separate provision for making reasonable potential determinations is included under 5-2-11.5(g) for discharges consisting solely of once-through noncontact cooling water (NCCW) whose intake and outfall points for the NCCW are located on the same body of water. This provision may also be applied to discharges consisting of mixed wastestreams (e.g. NCCW, stormwater and process wastewater) if each component is considered separately. The discharges from ArcelorMittal West Outfalls 002, 009 and 010 consist mostly of NCCW with smaller amounts of stormwater and groundwater. Outfall 009 will contain a new internal Outfall 509 in the renewal permit. One condition for determining whether the intake and outfall points are located on the same body of water is that, "there be a direct hydrological connection between the intake and discharge points (the water at the point of intake naturally flows toward the water at the point of discharge)" (5-2-11.5(b)(4)(B)(i)(BB)). In addition, an intake pollutant shall be considered to be from the same body of water as the discharge if the intake point is located on Lake Michigan and the outfall point is located on a tributary of Lake Michigan and specific conditions listed in the rules are met (5-2-11.5(b)(4)(B)(iv)). For ArcelorMittal West, the cooling water system, which includes two intakes in Lake Michigan and one in the Indiana Harbor, is interconnected. The intake in the Indiana Harbor is downstream of Outfalls 002, 009 and 010. Therefore, although reverse flows do occur in the Indiana Harbor Canal, water at the point of intake does not naturally flow toward the water at the point of discharge so 5-2-11.5(g) is not applicable to Outfalls 002, 009 and 010. Therefore, 5-2-11.5(g) was not applied to any ArcelorMittal outfall.

To develop wasteload allocations and conduct reasonable potential to exceed analyses, IDEM utilized the following effluent data collected and submitted by ArcelorMittal: data collected during the period July 2005 through June 2010 in accordance with the current permit and reported on monthly monitoring reports (MMRs); data collected in 1999 and 2000 as part of the Grand Calumet River TMDL study; and, data collected for the 2005 and 2009 permit renewal

ED_002857_00000137-00184

application updates. In response to an IDEM enforcement action for violations of effluent limitations for Zinc at Outfall 011, the facility began using an additional treatment chemical to assist in the removal of zinc from the wastewater. Therefore, effluent data for Zinc collected prior to January 2009 at Outfall 011 were not considered to be representative and were not used in the reasonable potential analysis.

To develop wasteload allocations, IDEM utilized the following sources of water quality data for the Indiana Harbor Canal and Indiana Harbor: IDEM fixed water quality monitoring station IHC-3S at Columbus Drive (Indiana Harbor Canal upstream of Lake George Canal and all ArcelorMittal outfalls); IDEM fixed station IHC-2 at Dickey Road (Indiana Harbor Canal); IDEM fixed station IHC-0 at the mouth of the Indiana Harbor just upstream of Outfall 011; data collected in the Indiana Harbor Canal and Indiana Harbor in 1999 and 2000 as part of the Grand Calumet River TMDL study; data collected by ArcelorMittal USA – Indiana Harbor East at two locations in the Indiana Harbor Canal and one location in the Indiana Harbor during their six week monitoring period in 1996; and, Mercury data collected by USGS in 2001 and 2002.

After a review of effluent and instream data for the Indiana Harbor Canal/Lake George Canal/Indiana Harbor subwatershed, it was decided to conduct a multi-discharger WLA for Ammonia-N, Chloride, Fluoride, Sulfate, Lead, Zinc and Total Residual Chlorine. Indiana currently only has a Great Lakes water quality criterion for Sulfate that applies to public water supply intakes and to Lake Michigan. A screening value based on the Indiana criterion for waters outside the Great Lakes system at 2-1-6(a)(5) was used for the Indiana Harbor Canal and Indiana Harbor. An industrial water supply criterion for Total Dissolved Solids of 750 mg/l applies in the Indiana Harbor at the ArcelorMittal Indiana Harbor West intake. This also limits the amount of Sulfate that can be discharged due its contribution to dissolved solids. Other pollutants of concern, including Mercury, were considered on an outfall by outfall basis for the dischargers in the subwatershed. Effluent data for ArcelorMittal Indiana Harbor West Outfalls 002, 009 and 010 from the 1999 Grand Calumet River TMDL Study showed Total Chromium concentrations of less than 2 ug/l. Effluent data for Outfall 011 collected in 1999 for the TMDL study showed a Total Chromium concentration of less than 2 ug/l and effluent data collected for the 2005 permit renewal application update showed a Total Chromium concentration of less than 0.6 ug/l. Based on these data points being much less than the most stringent, applicable water quality criteria (120 ug/l dissolved Chromium (III) and 11 ug/l dissolved Hexavalent Chromium), Total Chromium and Hexavalent Chromium were not considered pollutants of concern for Outfalls 002, 009, 010 and 011.

In the 1992 model, the Indiana Harbor Canal was divided into sixteen complete mix segments, the Lake George Canal into five complete mix segments and the Indiana Harbor into five complete mix segments. Each of these segments included surface and bottom layers to account for stratification resulting from the warmer canal water inducing an underflow of cooler lake water. The intrusion of lake water was accounted for in the model by adding a portion of the total lake intrusion flow to the surface layer of each of nine affected segments in the Indiana Harbor and Indiana Harbor Canal. A total lake intrusion flow of 1000 cfs was used in the 1992 model. The lake intrusion flow was reevaluated in 2002 by the U.S. Army Corps of Engineers (USACE) as part of the Grand Calumet River TMDL Study. The USACE determined that the lake intrusion flow used in the 1992 model was based on measurements collected during a high

ED_002857_00000137-00185

lake level. The USGS measured a lake intrusion flow of 138 cfs in October 2002 during a normal lake level condition. The lake intrusion flow measured during the normal lake level condition was determined to be more appropriate for modeling purposes. A new multi-discharger model was developed using a spreadsheet to conduct the multi-discharger WLA for the Indiana Harbor Canal/Lake George Canal/Indiana Harbor. The segmentation used in the 1992 model was maintained in the new spreadsheet model, but only the surface layer was modeled since it will have the higher pollutant concentrations.

In the development of wasteload allocation inputs for the 1992 model, the final acute value (FAV) was applied to individual outfalls and chronic criteria were applied to the end of each segment allowing up to one hundred percent (100%) of the stream flow for mixing. The procedures in 5-2-11.4 require the more stringent of the FAV or the acute WLA calculated using up to a one-to-one dilution to be applied to individual outfalls. They also limit the dilution available for each outfall (the mixing zone) to twenty-five percent (25%) of the stream design flow. Because of the potential for overlapping mixing zones within a segment, the combined discharges in a segment were also limited collectively to twenty-five percent (25%) of the stream design flow. This was done in accordance with 5-2-11.4(b)(3)(D) which requires the combined effect of overlapping mixing zones to be evaluated to ensure that applicable criteria and values are met in the area where the mixing zones overlap.

Based on the reasonable potential statistical procedure at 5-2-11.5(b)(1)(iii) and (iv), the procedures under 5-2-11.4(c) are used as the basis for determining preliminary WLAs and the preliminary WLAs are then used to develop monthly and daily PELs in accordance with the procedure for converting WLAs into WQBELs under 5-2-11.6. Three critical inputs to the procedure under 5-2-11.4(c) include the background concentration, the effluent flow and the stream flow. The background concentration is determined under 5-2-11.4(a)(8). Under this rule, background concentrations can be determined using actual instream data or instream concentrations estimated using actual or projected pollutant loading data. In the multi-discharger WLA, instream data were used to establish the background concentration for the first segment of the model and then either actual or projected pollutant loading data were used. For pollutants not included in the multi-discharger WLA, instream data were used.

In the 1992 model, the flow assigned to each outfall was the long-term average flow. This was continued in the current analysis using data from January 2006 through December 2007. For Outfall 009, the new Internal Outfall 509 flow (1.1 mgd) was added to the current long-term average flow (54.2 mgd) to obtain a new Outfall 009 flow of 55.3 mgd for the permit renewal. The stream design flow used to develop wasteload allocations is determined under 5-2-11.4(b)(3). For the pollutants considered in this analysis, the aquatic life criteria are limiting and the stream design flow for chronic aquatic life criteria is the Q7,10. The flow entering the Indiana Harbor Canal consists mostly of treated effluent flow. It has been historical practice to carry the long-term average discharge flow through the watershed to be used to determine discharge requirements for downstream dischargers. Since three distinct subwatersheds are now being modeled and the background concentration is being reset using actual instream data, it was also necessary to reset the stream flow. Since the Q7,10 is the appropriate flow for the water quality criteria being considered, the Q7,10 was used as the upstream flow for the Indiana Harbor Canal/Lake George Canal/Indiana Harbor WLA. Therefore, the stream design flow was

ED_002857_00000137-00186

set equal to the Q7,10 flow in the first segment of the multi-discharger model and then the long-term average flow of each discharger was added to become the stream design flow for downstream dischargers. The lake intrusion flow was added to the stream design flow at the end of each applicable segment. The Q7,10 was calculated using data from USGS gaging station 04092750 which is located in the Indiana Harbor Canal at Canal Street. The data used in the calculation consisted of continuous daily mean flow data approved by the USGS for the period 10-1-1994 through 9-30-2009. The Q7,10 based on the climatic year (April 1 through March 31) is 352 cfs.

At each applicable outfall, PELs were calculated for each pollutant of concern using an outfall specific spreadsheet that calculates PELs using the procedures under 5-2-11.4(c) to calculate WLAs and the procedures under 5-2-11.6 to convert WLAs into PELs. The spreadsheet considers all water quality criteria (acute and chronic aquatic life, human health and wildlife) and associated stream design flows and mixing zones. The stream design flow for each water quality criterion was set equal to the same value in the outfall specific spreadsheet. This value was the Q7,10 flow plus the accumulation of long term average effluent flow and any lake intrusion flow, minus any intake flow. For Mercury, which is a bioaccumulative chemical of concern (BCC), a mixing zone was not allowed in the development of PELs for any outfall in accordance with 5-2-11.4(b)(1). For those pollutants included in a multi-discharger WLA, the multi-discharger model was used to ensure that the most stringent water quality criterion is met at the edge of the mixing zone for each segment. This was the 4-day average chronic criterion. The multi-discharger model was also used to ensure that Lake Michigan criteria are met at the end of the last segment in the Indiana Harbor. The preliminary WLA was included as an input in the multi-discharger model and PELs were calculated from the preliminary WLA.

In the multi-discharger model, preliminary WLAs for each outfall were established, if possible, so that the monthly and daily PEQs did not exceed the PELs calculated from the preliminary WLAs. If TBELs were included for the parameter at a final outfall or an internal outfall, then the preliminary WLA was increased to the extent possible to allow the mass-based PELs to exceed the TBELs. In the case of Outfall 009, this included establishing PELs for ammonia-N that were higher than limits requested by the facility for new Internal Outfall 509 as part of a 301(g) variance. The preliminary WLAs were adjusted as necessary so that the calculated PELs did not exceed the PELs calculated using the outfall specific spreadsheets and so that the water quality criterion was not exceeded at the edge of the mixing zone for each segment as determined using the multi-discharger model. For some outfalls, the discharge of one or more pollutants for which a multi-discharger WLA was conducted was not considered significant, so a preliminary WLA was established based on the reported effluent concentration, or if sufficient data were available, reported effluent loading data, but PELs were not calculated as allowed under 5-2-11.5(b)(1).

After assigning a preliminary WLA to each outfall in a segment and entering the WLA into the multi-discharger model, the model calculates the PELs for each outfall, the concentration at the edge of the mixing zone for the segment and the concentration at the end of each segment after complete mixing. The concentration after complete mixing then becomes the background concentration for the next segment. To calculate PELs using the outfall specific spreadsheets, the background concentration for each outfall was calculated assuming complete mixing between outfalls. This was done by entering the WLAs for each outfall into a separate spreadsheet that

calculated the background concentration upstream of each outfall. By conducting a multi-discharger WLA in this manner, the background concentration for each outfall was based on the accumulated WLAs for the prior outfalls. Since the WLAs were based in some cases on projected effluent quality, the background concentrations were based on projected loading data. This provided a conservative means of determining the cumulative impact of the outfalls. For those pollutants not included in a multi-discharger WLA, the background concentration for each outfall was based on instream data.

The results of the reasonable potential statistical procedure are included in Tables 2-5. The results show that the discharges from ArcelorMittal Indiana Harbor West Outfalls 002, 009, 010 and 011 have a reasonable potential to exceed a water quality criterion for Mercury.

In addition to establishing WQBELs based on the reasonable potential statistical procedure, IDEM is also required to establish WQBELs under 5-2-11.5(a) "If the commissioner determines that a pollutant or pollutant parameter (either conventional, nonconventional, a toxic substance, or whole effluent toxicity (WET)) is or may be discharged into the Great Lakes system at a level that will cause, have the reasonable potential to cause, or contribute to an excursion above any applicable narrative criterion or numeric water quality criterion or value under 327 IAC 2-1.5." Chlorine is added to the intake water for zebra and quagga mussel control at concentrations exceeding water quality criteria. Therefore, Chlorine may be discharged from Outfalls 002, 009, 010, and 011 at a level that will cause an excursion above the numeric water quality criterion for Total Residual Chlorine under 2-1.5 and WQBELs for Total Residual Chlorine are required at Outfalls 002, 009, 010, and 011.

For each pollutant receiving TBELs at an internal outfall, and for which water quality criteria or values exist or can be developed, concentration and corresponding mass-based WQBELs were calculated at the final outfall. The WQBELs were set equal to the applicable PELs from the multi-discharger model or the outfall specific spreadsheet. This was done for Outfall 009 (Ammonia-N, Lead and Zinc at new internal Outfall 509) and Outfall 011 (Lead and Zinc at new internal Outfalls 701 and 702). The mass-based WQBELs at the final outfall were compared to the mass-based TBELs. Since the facility is authorized to discharge up to the mass-based TBELs, if the mass-based TBELs exceed the mass-based WQBELs at the final outfall, the pollutant may be discharged at a level that will cause an excursion above a numeric water quality criterion or value under 2-1.5 and WQBELs are required for the pollutant at the final outfall. This was not the case for any pollutant at Outfall 009 or Outfall 011.

Once a determination is made using the reasonable potential provisions under 5-2-11.5 that WQBELs must be included in the permit, the WQBELs are calculated in accordance with 5-2-11.5(d). Under this provision, in the absence of an EPA-approved TMDL, WLAs are calculated for the protection of acute and chronic aquatic life, wildlife, and human health in accordance with the WLA provisions under 5-2-11.4. The WLAs are then converted into WQBELs in accordance with the WQBEL provisions under 5-2-11.6. The WQBELs are included in Table 7 and were set equal to the PELs calculated for each pollutant.

A wasteload allocation was not conducted for Free Cyanide due to the absence of effluent data for this pollutant of concern. Under 5-2-11.5(b)(2), when effluent data for a pollutant of concern

ED_002857_00000137-00188

are not available for an existing discharger, the commissioner shall exercise best professional judgment, taking into account the source and nature of the discharge, existing controls on point and nonpoint sources of pollution, and, where appropriate, the dilution of the effluent in the receiving water to determine whether it is necessary to require the discharger to collect the data required to make a reasonable potential determination. Based on the presence of Free Cyanide on the 2010 303(d) list for the Indiana Harbor, monitoring for Free Cyanide is being included at all ArcelorMittal outfalls containing process wastewater. Under 5-2-11.5(e), the commissioner may require monitoring for a pollutant of concern even if it is determined that a WQBEL is not required based on a reasonable potential determination. Monitoring was continued or added for Fluoride due to the inclusion of this pollutant in the multi-discharger wasteload allocation.

In addition to the outfalls on the Indiana Harbor Canal and Indiana Harbor, ArcelorMittal Indiana Harbor West Outfall 012 discharges to the forebay of the No. 3 water intake. The No. 3 intake is located on a channel that runs along the west side of the Indiana Harbor breakwall from Lake Michigan, past the No. 3 intake, and to the Indiana Harbor West No. 2 intake. As noted above, this channel is considered the open waters of Lake Michigan. The discharge from Outfall 012 consists of flow from the North Lagoon. The North Lagoon receives treated wastewater from Internal Outfalls 111 (84-inch hot strip mill) and 211 (No. 3 cold mill), noncontact cooling water and stormwater. The facility conducted a dye dilution study in November 2010 to determine the amount of discharge flow from Outfall 012 that is recycled through and how much bypasses the No. 3 intake. The flow that bypasses the No. 3 intake is likely taken into the facility at the No. 2 intake. The study was done for two days with the 84-inch hot strip mill operating and for two days with it not operating. When the 84-inch hot strip mill was operating, the daily average percentage of flow recycled was 89.8% the first day and 88.0% the second day. When the 84-inch hot strip mill was not operating, the daily average percentage of flow recycled was 100% the first day and 99.2% the second day. Based on this study, it would be reasonable to consider that 12% of the Outfall 012 flow bypasses the No. 3 intake and directly enters waters of the state.

ArcelorMittal conducted a special sampling of effluent from Outfall 012 for the renewal of the NPDES permit. Data were collected from June 2004 through December 2004 and additional data were collected from November 2010 through February 2011 to obtain ten months of data. The effluent flow used in the wasteload allocation analysis was determined in accordance with 327 IAC 5-2-11.4(a)(9). Under this provision, the effluent flow used to develop WLAs for industrial dischargers is the highest monthly average flow from the previous two years of monitoring. An alternate effluent flow value may be used if the discharger provides flow data that supports the alternate value. Limited effluent flow data are available for Outfall 012 as data are only available from the special sampling effort. Based on information presented in the November 2010 dye study, the average discharge flow through Outfall 012, prior to recycle through the No. 3 intake, is 70.0 mgd when both the 84-inch hot strip mill and No. 3 cold mill are operating. Therefore, an effluent flow of 70.0 mgd was used in the wasteload allocation analysis although, based on the dye study, it should be recognized that only 12% of this flow bypasses the No. 3 intake and is discharged directly to waters of the state.

In addition to the aquatic life, human health and wildlife criteria that apply to all waters within the Great Lakes system, there are specific criteria that apply to Lake Michigan. These criteria

ED_002857_00000137-00189

are included in 327 IAC 2-1.5-8(j). For the pollutants of concern, Lake Michigan criteria are available for Chloride, Fluoride, Dissolved Iron, Sulfate and Total Dissolved Solids. The criteria for Chloride are the same as the aquatic life criteria that apply to all waters within the Great Lakes system. The criteria for Fluoride and Sulfate are more stringent and there are currently no criteria for Dissolved Iron that apply to all waters within the Great Lakes system. The PELs calculated using Lake Michigan criteria were compared to the PELs calculated using the criteria that apply to all waters within the Great Lakes system and the more stringent PELs were used as the applicable PELs.

According to 327 IAC 5-2-11.4(b)(2)(A)(ii)(AA), for discharges to Lake Michigan, a WLA based on a chronic criterion or value shall be set equal to the criterion or value unless an alternate mixing zone demonstration is conducted and approved under 327 IAC 5-2-11.4(b)(4). Therefore, the stream design flows for chronic aquatic life (Q7,10), human health (harmonic mean flow) and wildlife (Q90,10) criteria were set equal to zero. According to 327 IAC 5-2-11.4(b)(2)(A)(i)(AA), for discharges to Lake Michigan, the acute aquatic life criterion or value shall not be exceeded outside the zone of initial dilution and the final acute value shall not be exceeded in the undiluted discharge unless a mixing zone demonstration is conducted and approved under 327 IAC 5-2-11.4(b)(4). There is no Q1,10 for Lake Michigan, therefore, the Q1,10 was set equal to the discharge flow in order to allow for a zone of initial dilution.

To develop wasteload allocations, IDEM utilized the following sources of water quality data for Lake Michigan: IDEM fixed water quality monitoring station LM-W (Lake Michigan at Whiting Waterworks; hardness and pollutant background data) and fixed station LM-DSP (Lake Michigan at Dunes State Park; pH and temperature data).

The results of the reasonable potential statistical procedure are included in Table 6. The results show that the discharge from ArcelorMittal Indiana Harbor East Outfall 012 has a reasonable potential to exceed a water quality criterion for Vanadium and Zinc. The WQBELs are included in Table 7 and were set equal to the PELs calculated for each pollutant.

Chlorine is added to the intake water for zebra and quagga mussel control at concentrations exceeding water quality criteria. Therefore, Chlorine may be discharged from Outfall 012 at a level that will cause an excursion above the numeric water quality criterion for Total Residual Chlorine under 2-1.5 and WQBELs for Total Residual Chlorine are required at Outfall 012. Internal Outfall 211 has TBELs for Lead, Zinc, Naphthalene and Tetrachloroethylene. Therefore, as was done for Outfalls 009 and 011, mass-based WQBELs were calculated at Outfall 012 for these pollutants. The mass-based WQBELs at the final outfall were compared to the mass-based TBELs. Since the facility is authorized to discharge up to the mass-based TBELs, if the mass-based TBELs exceed the mass-based WQBELs at the final outfall, the pollutant may be discharged at a level that will cause an excursion above a numeric water quality criterion or value under 2-1.5 and WQBELs are required for the pollutant at the final outfall. This was not the case for any pollutant at Outfall 012.

ED_002857_00000137-00190

Whole Effluent Toxicity Requirements

The 1997 Indiana Great Lakes regulations included narrative criteria with numeric interpretations for acute (2-1.5-8(b)(1)(E)(ii)) and chronic (2-1.5-8(b)(2)(A)(iv)) whole effluent toxicity (WET) and a procedure for conducting reasonable potential for WET (5-2-11.5(c)(1)). U.S. EPA did not approve the reasonable potential procedure for WET so Indiana is now required under 40 CFR Part 132.6(c) to use the reasonable potential procedure in Paragraphs C.1 and D of Procedure 6 in Appendix F of 40 CFR Part 132.

A 1990 permit modification required ArcelorMittal to conduct chronic whole effluent toxicity (WET) testing using *Ceriodaphnia dubia* and Fathead Minnow monthly for a period of three months at Outfall 011. If toxicity, defined in the permit as 1.0 TUc (i.e. an NOEC of less than 100% effluent), was not demonstrated in any two tests, no further WET testing was required. The value of 1.0 TUc used to define toxicity was based on meeting chronic WET requirements in the undiluted discharge. The facility did demonstrate toxicity (2.0 TUc) to Fathead Minnow in one WET test. Since toxicity was only demonstrated in one WET test, the facility discontinued monitoring for WET.

The characteristics of the treated wastewater from Outfall 011 have changed since the WET tests were conducted in 1990. Blast furnace and sinter plant wastewater once treated and discharged through Outfall 011 is now treated and discharged through Internal Outfall 509 to Outfall 009. New wastewater treatment plants have also been installed to treat process wastewaters from vacuum degassing (Internal Outfall 701) and continuous casting (Internal Outfall 702) operations prior to discharge through Outfall 011. Therefore, the results of the 1990 WET tests are not considered to be representative of the current discharge from Outfall 011 and were not used in a reasonable potential analysis for WET.

The permittee will be required to conduct whole effluent toxicity testing of its effluent discharge from Outfall 009, Outfall 011 and Outfall 012 using *Ceriodaphnia dubia* and Fathead Minnow. The terms and conditions of the WET testing are contained in Part I.H. of the NPDES permit. Part I.H.1.c.(2) of the permit states that chemical analysis must accompany each effluent sample taken for bioassay test. The analysis detailed under Part I.A. should be conducted for each effluent sample. The effluent should be sampled using the sample type requirements specified in Part I.A. Questions regarding the WET testing procedures should be addressed to the Office of Water Quality, NPDES Permits Branch.

Acute and chronic toxicity testing is required at Outfall 009, Outfall 011 and Outfall 012. Acute toxicity is to be derived from chronic toxicity tests and toxicity is to be reported in terms of acute and chronic toxic units and compared to calculated toxicity reduction evaluation (TRE) triggers. The TRE triggers are set equal to the acute and chronic WLAs for WET in accordance with 327 IAC 5-2-11.6(d). If either an acute or chronic TRE trigger is exceeded, another chronic WET test must be conducted within two weeks. If the results of any two consecutive tests exceed the applicable TRE trigger, ArcelorMittal must conduct a TRE. For each outfall, after the completion of three toxicity tests that do not exceed the acute and chronic TRE triggers, ArcelorMittal may reduce the number of species tested to only include the most sensitive to the toxicity in the effluent. The TRE triggers are shown in Table 7.

ED_002857_00000137-00191

Thermal Requirements

The Indiana Harbor Canal and Indiana Harbor shall be capable of supporting a well-balanced, warm water aquatic community. The water quality criteria for temperature applicable to these waterbodies are included in 327 IAC 2-1.5-8(c). Temperature was not a pollutant of initial focus in the Water Quality Guidance for the Great Lakes system under 40 CFR Part 132. Therefore, Indiana was allowed to apply its own temperature criteria to waters within the Great Lakes system when the rules were last revised in 1997 as part of the Great Lakes rulemaking. During this rulemaking, the monthly maximum temperature criteria that were updated in 1990 were retained. Indiana regulations state that the temperature criteria apply outside a mixing zone, but the allowable mixing zone is not established in the rules. IDEM current practice is to allow fifty percent (50%) of the stream flow for mixing to meet temperature criteria.

The implementation procedures under 327 IAC 5-2-11.4 for developing wasteload allocations for point source discharges address temperature under 5-2-11.4(d)(3). This provision states that temperature shall be addressed using a model, approved by the commissioner, that ensures compliance with the water quality criteria for temperature. There is also no specific procedure in the rules for determining whether a discharger is required to have water quality-based effluent limits (WQBELs) for temperature. Therefore, the general provision for making reasonable potential determinations in 5-2-11.5(a) is applicable. This provision establishes that if the commissioner determines that a pollutant or pollutant parameter is or may be discharged into the Great Lakes system at a level that will cause, have the reasonable potential to cause, or contribute to an excursion above any applicable narrative or numeric water quality criterion under 2-1.5, the commissioner shall incorporate WQBELs in an NPDES permit that will ensure compliance with the criterion. In making this determination, the commissioner shall exercise best professional judgment, taking into account the source and nature of the discharge, existing controls on point and nonpoint sources of pollution, the variability of the pollutant or pollutant parameter in the effluent, and, where appropriate, the dilution of the effluent in the receiving water. The commissioner shall use any valid, relevant, representative information pertaining to the discharge of the pollutant.

The multi-discharger model for the Indiana Harbor Canal/Lake George Canal/Indiana Harbor subwatershed discussed above included five active outfalls discharging to the Indiana Harbor Canal and four active outfalls discharging to the Indiana Harbor that contain a thermal component such as noncontact cooling water or boiler blowdown as a source of wastewater. ArcelorMittal Indiana Harbor – Indiana Harbor West Outfall 002 has a flow of 11.2 mgd consisting mostly of noncontact cooling water; Outfall 009 has a flow of 55.3 mgd with Internal Outfall 509 having a flow of 1.1 mgd and the remaining consisting mostly of noncontact cooling water; Outfall 010 has a flow of 36.6 mgd consisting mostly of noncontact cooling water; Outfall 011 has a flow of 23.4 mgd with new Internal Outfalls 701 and 702 having combined flows of less than 1 mgd and the remaining consisting mostly of noncontact cooling water. The 1986 permit does not include a requirement for the monitoring of effluent temperature. The permit does include a requirement that sets the allowable net plant thermal discharge for Outfalls 001, 002, 009, 010 and 011 at 2.24×10^9 BTU/Hr. Based on the Post Public Notice Addendum included in the Fact Sheet of the 1986 permit, temperature monitoring was removed from the permit because the production at that time did not approach the limitation for thermal output.

ED_002857_00000137-00192

The main source of cooling water for ArcelorMittal West Outfall 002 is the No. 1 Intake on the Indiana Harbor. The main source of cooling water for ArcelorMittal West Outfalls 009, 010 and 011 is the No. 2 Intake on Lake Michigan. Since the facility is not required to report effluent temperature, limited data are available. Effluent temperature data were collected in July 1999 and April 2000 as part of the Grand Calumet River TMDL study. Effluent temperature data are also available from the 2009 permit renewal application update and are reported as winter values. The maximum reported temperatures were measured during the 1999 TMDL sampling and were 86 °F at Outfall 002, 97 °F at Outfall 009, 84 °F at Outfall 010 and 82 °F at Outfall 011.

The multi-discharger model accounted for the intrusion of lake water into the Indiana Harbor and Indiana Harbor Canal. The intrusion of lake water produces thermal stratification that ends at the railroad bridge about 0.7 miles upstream of the mouth of the Indiana Harbor Canal. The ArcelorMittal Indiana Harbor Long Carbon (IN0063355) Outfall 001 on the east side of the canal and ArcelorMittal Indiana Harbor – Central WWTP (IN0063711) Outfall 001 and ArcelorMittal West Outfall 002 on the west side of the canal are upstream of the railroad bridge. ArcelorMittal West Outfalls 009 and 010, which are two large sources of non-contact cooling water, are the first two discharges downstream of the railroad bridge. As part of a special condition in the ArcelorMittal Indiana Harbor East (IN0000094) 1996 permit, the facility was required to conduct sampling in the Indiana Harbor Canal downstream of ArcelorMittal Indiana Harbor Long Carbon Outfall 001 and between ArcelorMittal East Outfalls 008 and 011 and in the Indiana Harbor at a point equal distant from ArcelorMittal East Outfalls 011, 014 and 018. Sampling was to be conducted from April through November for two years and at three river depths (one foot below the surface, mid-depth and one foot above the bottom). The facility conducted the sampling in 1997 and 1998 and submitted a summary of the results of this sampling along with an analysis of the thermal impact of the ArcelorMittal discharges to the Indiana Harbor Canal and Indiana Harbor based on the sampling results in a November 19, 2010 report. The report concluded the following: ArcelorMittal East (IN0000094) and ArcelorMittal West (IN0000205) were both operating at reasonably high production rates in 1997 and 1998 as measured by raw steel production; ambient air temperatures were within normal ranges; there have been no significant changes in the flow regimes in the Indiana Harbor Canal since the study was done; and, the study results demonstrate compliance with applicable temperature criteria.

Additional temperature monitoring at multiple depths was conducted in the Indiana Harbor Canal and Indiana Harbor as part of the July 1999 and April 2000 sampling conducted for the Grand Calumet River TMDL study. The sampling included two locations in the Indiana Harbor (just beyond the lighthouse at the outer edge of the Indiana Harbor and in the middle of the Indiana Harbor, just downstream of ArcelorMittal West Outfall 011, the last outfall on the Indiana Harbor), two locations in the Indiana Harbor Canal downstream of the railroad bridge (about 0.6 miles downstream of ArcelorMittal West Outfalls 009 and 010 at the mouth of the Indiana Harbor Canal and about 0.3 miles downstream of ArcelorMittal West Outfalls 009 and 010), one location just downstream from Dickey Road and downstream of the three thermal discharges upstream of the railroad bridge and one location just upstream of ArcelorMittal Indiana Harbor – Central WWTP Outfall 001 which is the ArcelorMittal thermal discharge that is furthest upstream of the railroad bridge. The data showed temperature stratification downstream of the railroad bridge and a decreasing trend in temperature from upstream to downstream. The Indiana Harbor Canal and Indiana Harbor were in compliance with the water quality criteria for

temperature. Effluent temperature and flow data were collected during the July 1999 sampling and effluent temperature data were collected during the April 2000 sampling. The TMDL studies were done after the shutdown of the No. 4 AC power station that discharged through ArcelorMittal East Outfall 018 until about May 1999. A review of historical instream temperature data at IDEM fixed stations on the Indiana Harbor Canal and Indiana Harbor from January 1990 through December 2010 and the fixed station on Lake Michigan from January 1997 through December 2010 shows that the maximum temperature values were recorded in July 1999. The average stream flow during the July 1999 temperature monitoring as recorded at USGS gaging station 04092750 in the Indiana Harbor Canal at Canal Street was 485 cfs which is close to the Q7,10 of 352 cfs. Therefore, the July 1999 temperature monitoring was done during a period that is very close to critical stream conditions.

In addition to the instream sampling, a multi-discharger model was used to assist in the reasonable potential analysis. The multi-discharger model for toxics discussed above was modified to account for temperature. The mixing zone was set at fifty percent (50%) of the stream flow to be consistent with current IDEM practice for mixing zones for temperature. The model does not account for heat dissipation so it represents a conservative, dilution only analysis. The effluent and instream data collected in July 1999 and April 2000 as part of the Grand Calumet River TMDL study were used as inputs to the model to determine if the model could predict the measured instream temperatures. The model predicts an increase in temperature downstream of the railroad bridge beginning with ArcelorMittal West Outfalls 009 and 010 and no exceedance at the edge of any mixing zones for both July 1999 and April 2000. The July 1999 TMDL data show a large decrease in temperature (about 7 °F) from Dickey Road to downstream of ArcelorMittal West Outfalls 009 and 010 in the upper one-half depth of the temperature stratified river with an even larger decrease in the lower one-half depth. There was essentially no further decrease in temperature in the Indiana Harbor during the sampling. The April 2000 TMDL data show a small decrease (about 0.5 °F) from Dickey Road to downstream of Outfalls 009 and 010. However, the temperature did decrease to a larger extent in the Indiana Harbor (about 4 °F). The multi-discharger model is therefore a conservative means of determining the impact of the thermal discharges.

A Q7,10 flow of 352 cfs, long-term average effluent flows, except as noted below, and background temperatures from fixed station IHC-3S were used in the multi-discharger thermal model as were used in the multi-discharger toxics model. The critical peak temperature months of June through September were included as one period since the same maximum criterion of 90 °F applies each month. The effluent temperature input to the model for ArcelorMittal Indiana Harbor Long Carbon and ArcelorMittal East was set equal to the maximum temperature reported for the month during the period January 1998 through December 2010 if it was considered representative data. The effluent temperature for ArcelorMittal Indiana Harbor – Central WWTP and ArcelorMittal West was set equal to the July 1999 TMDL data for the June through September period and the greater of the 2009 permit renewal application data or the April 2000 TMDL data for the other months since the permit renewal application data were reported as winter values. The effluent flow for ArcelorMittal West Outfall 009 for the June through September period was set equal to the daily maximum flow due to this outfall having the highest effluent temperature and a significant increase in discharge flow during this period.

The results of the conservative, dilution only modeling show that the discharge from ArcelorMittal Indiana Harbor West Outfall 002 does not have a reasonable potential to cause or contribute to an excursion of the water quality criterion for temperature in the Indiana Harbor Canal or Indiana Harbor from January through December. The results of the modeling also show that the discharges from ArcelorMittal Indiana Harbor West Outfalls 009, 010 and 011 do not have a reasonable potential to cause or contribute to an excursion of the water quality criterion for temperature in the Indiana Harbor Canal or Indiana Harbor from March through December. Therefore, based on the results of the instream sampling and multi-discharger thermal model, the discharge from ArcelorMittal Indiana Harbor West Outfall 002 does not have a reasonable potential to exceed a water quality criterion for temperature during the months January through December and the discharges from Outfalls 009, 010 and 011 do not have a reasonable potential to exceed a water quality criterion for temperature during the months March through December. Under 5-2-11.5(e), the commissioner may require monitoring for a pollutant of concern even if it is determined that a WQBEL is not required based on a reasonable potential determination. Monitoring for temperature and thermal discharge was added to Outfalls 002, 009, 010 and 011 in the renewal permit. Actual effluent temperature data for January and February are needed to determine whether the discharges from ArcelorMittal Indiana Harbor West Outfalls 009, 010 and 011 have a reasonable potential to cause or contribute to an excursion of the water quality criterion for temperature in January and February using the model. Based on the main source of intake water for Outfalls 009, 010 and 011 being Lake Michigan, the available temperature data for these outfalls during winter months other than January and February, the available dilution, the heat dissipation that occurs in the Indiana Harbor Canal and Indiana Harbor as shown by the April 2000 TMDL data, and the temperature stratification in the Indiana Harbor Canal and Indiana Harbor downstream of the railroad bridge, IDEM believes that it is sufficient to collect effluent temperature data for Outfalls 009, 010 and 011 during the months of January and February for the term of the permit renewal for use in conducting temperature modeling during the next permit renewal.

Antidegradation

New regulations in Indiana governing implementation of antidegradation for discharges to waters within the Great Lakes system became effective in 1997. The regulations were developed in accordance with the Water Quality Guidance for the Great Lakes System at 40 CFR Part 132. The regulations included an antidegradation policy (327 IAC 2-1.5-4), antidegradation implementation procedures for High Quality Waters that are not Outstanding State Resource Waters (OSRWs) (327 IAC 5-2-11.3(b)) and antidegradation implementation procedures for OSRWs (5-2-11.7). The implementation procedures for High Quality Waters and OSRWs distinguish between pollutants that are bioaccumulative chemicals of concern (BCCs) and pollutants that are not BCCs. For waters that are not considered High Quality Waters, the regulations do not allow a lowering of water quality (5-2-11.3(a)).

The Indiana portion of the open waters of Lake Michigan is designated in 2-1.5-19(b)(2) as an OSRW. Therefore, ArcelorMittal Indiana Harbor West Outfall 012, which discharges to Lake Michigan, is subject to the antidegradation implementation procedures for OSRWs in 327 IAC 5-2-11.7. The antidegradation implementation procedures for OSRWs include provisions for

discharges to tributaries of OSRWs in 5-2-11.7(a)(2). Since the Indiana Harbor Canal and Indiana Harbor are tributaries to Lake Michigan, the discharges from ArcelorMittal Indiana Harbor West Outfalls 002, 009, 010 and 011 are subject to the antidegradation implementation procedures in 5-2-11.7(a)(2) in addition to those in 5-2-11.3. The procedures in 5-2-11.7(a)(2) are supplemented by Non-Rule Policy Document Water-002-NRD, "Antidegradation Requirements for Outstanding State Resource Waters Inside the Great Lakes Basin."

The Indiana Harbor Canal is considered a High Quality Water for all of the pollutants limited in the ArcelorMittal permit except Oil and Grease since it is included on the 2010 303(d) List for this parameter. The Indiana Harbor is considered a High Quality Water for all of the pollutants limited in the ArcelorMittal permit except Free Cyanide and Mercury since it is included on the 2010 303(d) List for Free Cyanide and for Mercury in fish tissue. Lake Michigan is considered a High Quality Water for all of the pollutants limited in the ArcelorMittal permit except Mercury since it is included on the 2010 303(d) List for Mercury in fish tissue. Mercury is the only pollutant of concern in the ArcelorMittal permit that is a BCC.

After the effluent limitations were established for the proposed permit, a review was done to determine if the permit satisfies the antidegradation requirements in 5-2-11.3 and 5-2-11.7. The Indiana Harbor Canal is not a High Quality Water for Oil and Grease, so discharges of Oil and Grease are not allowed to cause a lowering of water quality in accordance with 5-2-11.3(a). The Indiana Harbor is not a High Quality Water for Free Cyanide and Mercury, so discharges of Free Cyanide and Mercury are not allowed to cause a lowering of water quality in accordance with 5-2-11.3(a). The Indiana Harbor Canal and Indiana Harbor are High Quality Waters for the other pollutants of concern in the ArcelorMittal permit so in accordance with 5-2-11.3(b), for High Quality Waters that are not designated as an OSRW, no action resulting in a significant lowering of water quality can occur unless an antidegradation demonstration has been completed and approved. Since the Indiana Harbor Canal and Indiana Harbor are tributaries of an OSRW, in accordance with 5-2-11.7(a)(2)(B), the discharges shall not cause a significant lowering of water quality in the OSRW. If a discharge to a tributary of an OSRW causes a significant lowering of water quality in the OSRW, it would not be allowed, regardless of an approvable antidegradation demonstration under 5-2-11.3.

According to 5-2-11.3(b)(1)(A), a significant lowering of water quality occurs if there is a new or increased loading of a BCC from a point source for which a new permit or permit modification would be required. According to 5-2-11.3(b)(1)(B), a significant lowering of water quality occurs if there is a new or increased permit limit for a non-BCC from a point source and the new or increased permit limit will result in both of the following:

(i) A calculated increase in the concentration of the substance outside of the mixing zone, and;

(ii) A lowering of water quality that is greater than a de minimis lowering of water quality.

According to 5-2-11.7(a)(2), for a new or increased discharge of a pollutant or pollutant parameter from a new or existing Great Lakes discharger into a tributary of an OSRW for which a new or increased permit limit would be required, the following apply:

(1) 327 IAC 5-2-11.3(a) and 327 IAC 5-2-11.3(b) apply to the new or increased discharge; and

(2) the discharge shall not cause a significant lowering of water quality in the OSRW.

According to nonrule policy document Water-002-NPD, a new or increased discharge into a tributary of Lake Michigan will not cause a significant lowering of water quality in Lake Michigan if any of several provisions are met, including the following:

> The new or increased discharge into a tributary of Lake Michigan does not cause a significant lowering of water quality in the tributary, as determined under 327 IAC 5-2-11.3(b)(1)(A) or 327 IAC 5-2-11.3(b)(1)(B).

In addition to the antidegradation provisions in 5-2-11.3(b)(1)(A) and 5-2-11.3(b)(1)(B), exemptions and exceptions to antidegradation apply in 5-2-11.3(b)(1)(C). For example, in accordance with 5-2-11.3(b)(1)(C)(ii), the following does not constitute a significant lowering of water quality:

New limits for an existing permitted discharger that are not a result of changes in pollutant loading, and will not allow an increase in pollutant loading, including new limits that are a result of the following:

(AA) New or improved monitoring data.
(BB) New or improved analytical methods.
(CC) New or modified water quality criteria or values.
(DD) New or modified effluent limitations guidelines, pretreatment standards, or control requirements for POTWs.

Similarly, in addition to the antidegradation implementation provisions in 5-2-11.7(a)(2)(A) and 5-2-11.7(a)(2)(B), exemptions and exceptions apply in 5-2-11.7(a)(2)(C). For example, in accordance with 5-2-11.7(a)(2)(C)(i), the requirements of 5-2-11.7(a)(2) will be considered to have been met when one or more of the items listed in 5-2-11.3(b)(1)(C)(ii) apply.

The antidegradation procedures used in this review apply to point source discharges. The definition of "point source" in 5-1.5-40 applies to the discharge of a pollutant and the definition of "discharge of a pollutant" in 5-1.5-11 includes discharges through pipes that do not lead to treatment works. Therefore, the antidegradation procedures were applied to all final outfalls and to internal outfalls that do not lead to treatment works. Internal Outfalls 701 and 702 discharge to the main scale pit and receive further treatment prior to discharge through Outfall 011. Internal Outfalls 111 and 211 discharge to the North Lagoon prior to discharge through Outfall 012. Therefore, Internal Outfalls 701, 702, 111 and 211 were not considered point source discharges subject to the antidegradation implementation procedures. However, for information

purposes, they were included in the antidegradation review. Internal Outfall 509 does not pass through a treatment system prior to discharge through Outfall 009 and was therefore considered a point source discharge subject to the antidegradation implementation procedures.

Tables 8-10 were developed to compare the existing effective limitations to the proposed limitations for each outfall. As noted above, the Indiana Harbor Canal is not a High Quality Water for Oil and Grease and the Indiana Harbor is not a High Quality Water for Mercury so discharges of Oil and Grease to the Indiana Harbor Canal and discharges of Mercury to the Indiana Harbor are not allowed to cause a lowering of water quality in accordance with 5-2-11.3(a). For High Quality Waters, if the permit authorizes a new or increased loading of a BCC (Mercury) or new or increased limits for non-BCCs, further analysis was required to determine if the discharge would cause a significant lowering of water quality under 5-2-11.3. If the permit authorizes a new or increased discharge of a pollutant into a tributary of an OSRW for which a new or increased permit limit would be required, further analysis was also required to determine if the discharge would cause a significant lowering of water quality in the OSRW under 5-2-11.7(a)(2)(B).

A Side Table at the bottom of Table 9 provides an explanation of apparent new permit limits at Internal Outfalls 509, 701 and 702 and apparent increased permit limits at Outfall 009 that are actually due to a change in the way the limits are being applied in the proposed permit as compared to the current permit. For example, in the current permit, technology-based effluent limitations (TBELs) for the operations with wastewater discharges through Outfalls 009, 010 and 011 were applied at the final outfalls. In the proposed permit, TBELs modified through a 301(g) variance will be applied at final outfalls and all other TBELs will be applied at internal outfalls. In the current permit, the facility had a 301(g) variance for discharges of Ammonia-N and Phenols (4AAP) and TBELs for Total Cyanide from the blast furnace and sinter plant operations that applied to Outfalls 009, 010 and 011. A new treatment process for the blast furnace and sinter plant operations will discharge through Internal Outfall 509 and then through Outfall 009. Effluent limitations for blast furnace and sinter plant operations will apply to Internal Outfall 509 in the proposed permit for all parameters except Ammonia-N and Phenols (4AAP). For these parameters, the 301(g) variance from the current permit that was allocated between Outfalls 009, 010 and 011 has been continued, but the limits for Ammonia-N and Phenols (4AAP) have been reallocated between Outfalls 009, 010 and 011. In the current permit, at Outfall 011, effluent limitations for Lead, Zinc, Total Suspended Solids and Oil and Grease were also included based on plant operations including, and in addition to, blast furnace and sinter plant operations. A new treatment process for vacuum degassing operations will discharge through Internal Outfall 701 and a new treatment process for continuous casting operations will discharge through Internal Outfall 702. Both of these internal outfalls will discharge through Outfall 011. To determine if there are new or increased permit limits at Internal Outfalls 509, 701 and 702 and final Outfalls 009, 010 and 011, the limits at these outfalls in the proposed permit were combined and then compared to the combined limits at Outfalls 009, 010 and 011 in the current permit. This comparison was done in the Side Table at the bottom of Table 9.

Footnotes at the bottom of Table 10 provide an explanation of the following: (1) the comparison conducted in the Side Table at the bottom of Table 9; (2) whether the new or increased permit limit for a discharge of Oil and Grease to the Indiana Harbor Canal or the new or increased

ED_002857_00000137-00198

permit limit for a discharge of Mercury to the Indiana Harbor would cause a lowering of water quality in accordance with 5-2-11.3(a); (3) whether the new or increased loading for a BCC (mercury) or new or increased permit limits for non-BCCs would cause a significant lowering of water quality under 5-2-11.3(b) or a significant lowering of water quality in the OSRW under 5-2-11.7(a)(2)(B); and, (4) whether the new or increased discharge into an OSRW is allowed under 5-2-11.7. The following is a summary of the results of the antidegradation review in Tables 8-10.

As shown in the Side Table at the bottom of Table 9, the combined daily maximum mass TBEL for Oil and Grease is decreasing, but a new combined monthly average TBEL is required in the renewal permit. This is due to new monthly average TBELs for Oil and Grease being required at Internal Outfall 509 and Internal Outfall 702. Monthly average and daily maximum TBELs for Oil and Grease were authorized at Outfall 011 under the current permit, but only a daily maximum limit was applied. The Fact Sheet of the 1986 permit includes the calculation of monthly average and daily maximum TBELs for Oil and Grease at Outfall 011. The TBELs were a combination of the monthly average and daily maximum mass allowed for a number of process operations with separate TBELs. Monthly average TBELs were not provided for several of the operations so only a combined daily maximum TBEL was applied at Outfall 011. A portion of the calculated daily maximum TBEL for Outfall 011 was bubbled to Internal Outfalls 111 and 211. For those operations with monthly average and daily maximum TBELs for Oil and Grease, the monthly average was approximately one-third of the daily maximum. Through application of BPJ, IDEM has determined that for the process operations included under Outfall 011 in the 1986 permit that did not have monthly average TBELs, the monthly average mass limits that were authorized, but not applied, should be calculated using one-third of the daily maximum TBEL. Since a portion of the daily maximum TBELs was bubbled resulting in lower limits at Outfall 011 than calculated based on the process operations, the monthly average limit that was authorized, but not applied at Outfall 011 was determined to be 500 lbs/day and was calculated as one-third of the existing daily maximum limit of 1,500 lbs/day. The new combined monthly average TBEL does not allow an increase above what was authorized, but not applied in the current permit. The new TBELs at Internal Outfalls 509 and 702 are a new application of Federal Effluent Limitations Guidelines and fall under the antidegradation exemption in 5-2-11.3(b)(1)(C)(ii)(DD). Therefore, the new limits do not cause a significant lowering of water quality and antidegradation under 5-2-11.3(b) is satisfied. This exemption applies to 5-2-11.7(a)(2) so the new limits do not cause a significant lowering of water quality in the OSRW.

The Indiana Harbor Canal is not a High Quality Water for Oil and Grease, so antidegradation for the discharge of Oil and Grease from Internal Outfall 509 was implemented under 5-2-11.3(a). This provision does not allow a lowering of water quality for Oil and Grease that prevents the attainment of the water quality criterion. Indiana does not currently have a numeric water quality criterion for Oil and Grease that applies to the Indiana Harbor Canal. When NPDES permit number IN0000205 was last renewed in 1986, a numeric water quality criterion for Total Oils of 10 mg/l applied to the Indiana Harbor Canal. This criterion was not retained when the water quality standards applicable to the Indiana Harbor Canal were revised in 1990 and a water quality criterion for Oil and Grease was not included in the 1997 Great Lakes system rulemaking. The narrative water quality criteria that apply to the Indiana Harbor Canal do establish a water quality condition at 2-1.5-8(b)(1)(C) of being free from oil or other substances

ED_002857_00000137-00199

that produce a visible oil sheen in such degree as to create a nuisance. IDEM has used an Oil and Grease concentration of 10 mg/l to interpret this narrative criterion. A new monthly average TBEL for Oil and Grease is required at Internal Outfall 509. The monthly average TBEL does not result in a monthly average Oil and Grease concentration of greater than 10 mg/l at final Outfall 009 to meet the narrative criterion. This will ensure that the new limit does not result in a lowering of water quality for Oil and Grease in the Indiana Harbor Canal and antidegradation under 5-2-11.3(a) is satisfied.

New limits for Mercury are required at Outfalls 002, 009, 010 and 011 based on a reasonable potential analysis using data collected in 1999. Since the permit was last renewed in 1986, more stringent water quality criteria for Mercury have become effective and a new analytical method has become available that allows Mercury in the discharge to be quantified. The new limits for Mercury are a result of the following items in the antidegradation exemption in 5-2-11.3(b)(1)(C)(ii):

(AA) New or improved monitoring data.
(BB) New or improved analytical methods.
(CC) New or modified water quality criteria or values.

The new limits for Mercury are not a result of changes in pollutant loading and will not allow an increase in pollutant loading since the projected effluent quality is greater than the proposed effluent limits and the existing discharge flow was used to calculate the proposed mass limits. Therefore, the new limits for Mercury at Outfall 011 do not cause a lowering of water quality for Mercury and antidegradation under 5-2-11.3(a) is satisfied, and the new limits for Mercury at Outfalls 002, 009 and 010 do not cause a significant lowering of water quality for Mercury and antidegradation under 5-2-11.3(b) is satisfied. Since this same exemption applies to 5-2-11.7(a)(2), the new limits for Mercury at Outfalls 002, 009, 010 and 011 do not cause a significant lowering of water quality in the OSRW.

New mass limits for Total Residual Chlorine are required at Outfalls 002, 009, 010 and 011. The current permit only has concentration limits at these outfalls and they are less stringent than the proposed concentration limits. The existing effluent flow was used to calculate the WQBELs for the proposed permit so the new mass limits will not result in a calculated concentration increase outside of the mixing zone under 5-2-11.3(b)(1)(B)(i). Therefore, the new mass limits will not cause a significant lowering of water quality and antidegradation under 5-2-11.3(b) is satisfied. Since the new limits do not cause a significant lowering of water quality under 5-2-11.3(b)(1)(B), they do not cause a significant lowering of water quality in the OSRW in accordance with Non-Rule Policy Document Water-002-NPD.

A new concentration TBEL for 2,3,7,8-Tetrachlorodibenzofuran (2,3,7,8-TCDF) is required at Internal Outfall 509. Water quality criteria are not available for this pollutant and the concentration TBEL is set at less than the minimum level. A TBEL for this pollutant was added to the sintering subcategory under 40 CFR Part 420.23(a) during the 2002 revision of the Federal Effluent Limitations Guidelines for the Iron and Steel Manufacturing Point Source Category. Therefore, a TBEL for this pollutant was not applicable when the 1986 permit was issued. The production related to sintering listed in the Fact Sheet of the 1986 permit is 3,829 tons/day

whereas the production related to sintering used to calculate TBELs in the permit renewal is 3,800 tons/day. The new limit is not a result of changes in pollutant loading and, since the production has not increased, will not allow an increase in pollutant loading because the limit is set at less than the minimum level and the facility has installed treatment to meet the new TBEL. The new TBEL is a result of the application of a new Federal Effluent Limitation Guideline and falls under the antidegradation exemption in 5-2-11.3(b)(1)(C)(ii)(DD) so it does not cause a significant lowering of water quality and antidegradation under 5-2-11.3(b) is satisfied. This exemption also applies to 5-2-11.7(a)(2) so the new limit does not cause a significant lowering of water quality in the OSRW.

New TBELs for Naphthalene and Tetrachloroethylene are required at Internal Outfall 211 as a result of the new application of TBELs at this outfall. The TBELs for these pollutants were deferred under the 1986 permit pending a toxic organic pollutant study at Internal Outfall 211 to determine if limits were needed. The Fact Sheet of the 1990 permit modification states that the study was submitted in February 1988 and the results indicated that it was not appropriate to include limits for toxic organic pollutants at that time. The Fact Sheet of the 1986 permit does not include the calculation of daily maximum TBELs for Naphthalene and Tetrachloroethylene. Using the production numbers in the 1986 permit (4365 tons/day 40 CFR 420.103(a)(3), 1774 kkg/day 40 CFR 103(a)(4) and 2406.5 kkg/day 40 CFR 103(a)(5)) the daily maximum TBELs would have been 2.12 lbs/day for Naphthalene and 3.18 lbs/day for Tetrachloroethylene. Therefore, the new limits do not allow an increase above what was authorized, but not applied in the current permit. The new TBELs are a new application of Federal Effluent Limitations Guidelines and fall under the antidegradation exemption in 5-2-11.7(b)(2)(D) so they are allowed and antidegradation under 5-2-11.7 is satisfied.

A new monthly average TBEL for Oil and Grease is required at Internal Outfall 411 which is a mathematical combination of the discharges from Internal Outfalls 111 and 211. Monthly average and daily maximum TBELs for Oil and Grease were authorized for the combination of Internal Outfalls 111 and 211 under the current permit, but only a daily maximum limit was applied. The Fact Sheet of the 1986 permit includes the calculation of monthly average and daily maximum TBELs for Oil and Grease at Internal Outfalls 111 and 211. The TBELs were a combination of the monthly average and daily maximum mass allowed for several process operations with separate TBELs. Monthly average TBELs were not provided for the Hot Strip Mill under 40 CFR 420.72(c)(1). A portion of the calculated daily maximum TBELs for other process operations at the facility were also bubbled to Internal Outfalls 111 and 211. Through application of BPJ, IDEM has calculated for the permit renewal, based on current production, monthly average mass limits for the 84-inch Hot Strip Mill at one-third of the daily maximum. In the Fact Sheet of the 1986 permit, the combined monthly average allowance for the process operations contributing to Internal Outfalls 111 and 211 that had monthly average TBELs was 321.31 lbs/day and the daily maximum TBEL for the Hot Strip Mill was 3142.2 lbs/day. The amount of daily maximum mass that was bubbled to Internal Outfalls 111 and 211 was 1154 lbs/day. The monthly average mass for the Hot Strip Mill calculated as one-third of the daily maximum is 1047.4 lbs/day. The monthly average mass bubbled calculated through BPJ as one-third of the daily maximum is 385 lbs/day. The monthly average Oil and Grease limit for Internal Outfalls 111 and 211 that was authorized, but not applied in the 1986 permit is 1754 lbs/day. The proposed monthly average TBEL for Oil and Grease at Internal Outfall 411 in the

renewal permit is 1048 lbs/day. Therefore, the new monthly average limit does not allow an increase above what was authorized, but not applied in the current permit. The new TBEL is a new application of Federal Effluent Limitations Guidelines and falls under the antidegradation exemption in 5-2-11.7(b)(2)(D) so it is allowed and antidegradation under 5-2-11.7 is satisfied. New limits for Total Residual Chlorine, Vanadium and Zinc are required at Outfall 012 based on a reasonable potential analysis using data collected for the permit renewal and, additionally for Total Residual Chlorine, the fact that Chlorine is added to the intake water. The new limits are a result of the following item in the antidegradation exemption in 5-2-11.7(b)(2):

(A) New or improved monitoring data.

The new limits for Total Residual Chlorine, Vanadium and Zinc at Outfall 012 are not a result of changes in pollutant loading and will not allow an increase in pollutant loading since the projected effluent quality is greater than the proposed effluent limits and the existing discharge flow was used to calculate the proposed mass limits. The new limits fall under the antidegradation exemption in 5-2-11.7(b)(2)(A) so they are allowed and antidegradation under 5-2-11.7 is satisfied.

A complete antidegradation review of the proposed ArcelorMittal permit is included in Tables 8-10. Based on the antidegradation review, the Department has determined that the proposed permit complies with the antidegradation policy found in 2-1.5-4 and an antidegradation demonstration is not required.

The permittee is prohibited from undertaking any deliberate action that would result in a new or increased discharge of a BCC or a new or increased permit limit for a pollutant or pollutant parameter that is not a BCC unless one (1) of the following is completed prior to the commencement of the action; (i) Information is submitted to the commissioner demonstrating that the proposed new or increased discharge will not cause a significant lowering of water quality; (ii) An antidegradation demonstration submitted and approved in accordance with 5-2-11.3.

ED_002857_00000137-00202

TABLE 2 REASONABLE POTENTIAL TO EXCEED

ARCELORMITTAL INDIANA HARBOR
INDIANA HARBOR WEST
OUTFALL 002 (11.2 mgd)

PARAMETER	MONTHLY AVERAGE					DAILY MAXIMUM					PEL		PEQ > PEL	
	Maximum Effluent Value	Count	C.V.	M.F.	PEQ	Maximum Effluent Value	Count	C.V.	M.F.	PEQ	Monthly Average@	Daily Maximum	Monthly Average	Daily Maximum
Mercury (ng/l) #					**9.1**	1.46	1	0.6	6.2	**9.1**	**1.3**	**3.2**	Yes	Yes
Chloride (mg/l) $					**150**	39.6	2	0.6	3.8	**150**	**160**	**310**	No	No
Sulfate (mg/l) $					**140**	45.4	3	0.6	3.0	**140**	**150**	**300**	No	No
Ammonia-N (mg/l) ** :														
Summer %,!					**0.19**	0.05	2	0.6	3.8	**0.19**	**0.41**	**0.82**	No	No
Winter %,!					**0.19**	0.05	2	0.6	3.8	**0.19**	**0.41**	**0.82**	No	No

** Effluent data were obtained from the July 1999 TMDL study and from the June 2009 Form 2C.

Effluent data were obtained from the July 1999 TMDL study.

$ Effluent data were obtained from the July 1999 and April 2000 TMDL studies and, except for chloride, from the June 2009 Form 2C.

% Summer months are July through September, and winter months are October through June.

! Seasonal PEQs were not developed since less than one year of data are available.

@ Monthly average PELs were calculated based on the applicable sampling frequency in a month.

8/2/2011

TABLE 3 REASONABLE POTENTIAL TO EXCEED

ARCELORMITTAL INDIANA HARBOR
INDIANA HARBOR WEST
OUTFALL 009 (55.3 mgd)

PARAMETER	MONTHLY AVERAGE					DAILY MAXIMUM					PEL		PEQ > PEL	
	Maximum Effluent Value	Count	C.V.	M.F.	PEQ	Maximum Effluent Value	Count	C.V.	M.F.	PEQ	Monthly Average@	Daily Maximum	Monthly Average	Daily Maximum
Lead (ug/l) **					8.4					21	11	21	No	No
Mercury (ng/l) #					10	1.61	1	0.6	6.2	10	1.3	3.2	Yes	Yes
Zinc (ug/l) **					36					56	37	74	No	No
Chloride (mg/l) *					120	96	20	0.5	1.3	120	130	260	No	No
Fluoride (mg/l) *					1.6	1.2	20	0.5	1.3	1.6	1.6	3.1	No	No
Sulfate (mg/l) *					120	96	20	0.3	1.2	120	130	260	No	No
Ammonia-N (mg/l) $:														
Summer %					1.3					2.7	1.6	3.1	No	No
Winter %					1.3					2.7	1.6	3.1	No	No

* Effluent data were obtained from MMRs for the period July 2005 through June 2010.

** The monthly and daily PEQs are estimated values due to the addition of Internal Outfall 509. The estimated values are based on July 1999 TMDL study data for the existing discharge and the monthly and daily TBELs for Internal Outfall 509.

\# Effluent data were obtained from the July 1999 TMDL study.

$ The monthly and daily PEQs are estimated values due to the addition of Internal Outfall 509. The estimated values are based on the maximum of seasonal PEQs (0.38 mg/l monthly average and 0.58 daily maximum) developed using total ammonia-N MMR data for the existing discharge for the period July 2005 through June 2010 and the monthly and daily TBELs for net ammonia-N for Outfall 009 developed based on the addition of Internal Outfall 509 (425 lbs/day monthly average and 1000 lbs/day daily maximum).

% Summer months are July through September, and winter months are October through June.

@ Monthly average PELs were calculated based on the applicable sampling frequency in a month.

8/2/2011

TABLE 4 **REASONABLE POTENTIAL TO EXCEED**

ARCELORMITTAL INDIANA HARBOR
INDIANA HARBOR WEST
OUTFALL 010 (36.6 mgd)

PARAMETER	MONTHLY AVERAGE					DAILY MAXIMUM					PEL		PEQ > PEL	
	Maximum Effluent Value	Count	C.V.	M.F.	PEQ	Maximum Effluent Value	Count	C.V.	M.F.	PEQ	Monthly Average@	Daily Maximum	Monthly Average	Daily Maximum
Mercury (ng/l) #					**16**	2.57	1	0.6	6.2	**16**	**1.3**	**3.2**	Yes	Yes
Chloride (mg/l) *					**120**	96	20	0.5	1.3	**120**	**130**	**260**	No	No
Fluoride (mg/l) *					**1.4**	1.1	20	0.5	1.3	**1.4**	**1.4**	**2.8**	No	No
Sulfate (mg/l) *					**100**	86	20	0.3	1.2	**100**	**110**	**230**	No	No
Ammonia-N (mg/l) * :														
Summer %	0.26	15	0.4	1.3	**0.34**	0.51	66	0.5	1.0	**0.51**	**0.57**	**1.1**	No	No
Winter %	0.42	45	0.4	1.0	**0.42**	0.65	193	0.6	0.9	**0.59**	**0.57**	**1.1**	No	No

* Effluent data were obtained from MMRs for the period July 2005 through June 2010.

\# Effluent data were obtained from the July 1999 TMDL study.

% Summer months are July through September, and winter months are October through June.

@ Monthly average PELs were calculated based on the applicable sampling frequency in a month.

8/2/2011

TABLE 5 **REASONABLE POTENTIAL TO EXCEED**

ARCELORMITTAL INDIANA HARBOR
INDIANA HARBOR WEST
OUTFALL 011 (23.4 mgd)

PARAMETER	MONTHLY AVERAGE					DAILY MAXIMUM					PEL		PEQ > PEL	
	Maximum Effluent Value	Count	C.V.	M.F.	PEQ	Maximum Effluent Value	Count	C.V.	M.F.	PEQ	Monthly Average@	Daily Maximum	Monthly Average	Daily Maximum
Lead (ug/l) *	13	41	0.8	1.1	**14**	36	176	1.1	0.8	**29**	**26**	**52**	No	No
Mercury (ng/l) #					**3.5**	0.56	1	0.6	6.2	**3.5**	**1.3**	**3.2**	Yes	Yes
Zinc (ug/l) **	110	18	0.6	1.4	**150**	240	77	0.9	0.9	**220**	**180**	**350**	No	No
Chloride (mg/l) *					**110**	96	19	0.2	1.1	**110**	**120**	**250**	No	No
Fluoride (mg/l) *					**3.1**	2.4	19	0.5	1.3	**3.1**	**3.1**	**6.2**	No	No
Sulfate (mg/l) *					**97**	88	19	0.2	1.1	**97**	**110**	**230**	No	No
Ammonia-N (mg/l) * :														
Summer %	0.66	15	0.9	1.8	**1.2**	1.4	66	1.2	0.9	**1.3**	**1.6**	**3.1**	No	No
Winter %	1.4	45	1.2	1.1	**1.5**	3.2	194	1.7	0.8	**2.6**	**1.6**	**3.1**	No	No

* Effluent data were obtained from MMRs for the period July 2005 through June 2010.

** Effluent data were obtained from MMRs for the period January 2009 through June 2010.

Effluent data were obtained from the July 1999 TMDL study.

% Summer months are July through September, and winter months are October through June.

@ Monthly average PELs were calculated based on the applicable sampling frequency in a month.

8/2/2011

TABLE 6 **REASONABLE POTENTIAL TO EXCEED**

ARCELORMITTAL INDIANA HARBOR
INDIANA HARBOR WEST
OUTFALL 012 (70.0 mgd)

PARAMETER*	MONTHLY AVERAGE					DAILY MAXIMUM					PEL		PEQ > PEL	
	Maximum Effluent Value	Couut	C.V.	M.F.	PEQ	Maximum Effluent Value	Count	C.V.	M.F.	PEQ	Monthly Average@	Daily Maximum	Monthly Average	Daily Maximum
Cadmium (ug/l)	2	11	0.0	1.0	**2**	2	48	0.0	1.0	**2.0**	**2.6**	**5.3**	No	No
Total Chromium (ug/l)	5.8	11	0.3	1.3	**7.5**	12	49	0.4	1.0	**12**	**100**	**200**	No	No
Copper (ug/l)	10	11	0.05	1.0	**10**	10	49	0.05	1.0	**10**	**10**	**20**	No	No
Dissolved Iron (ug/l)	74	10	0.1	1.1	**81**	98	41	0.2	1.0	**98**	**250**	**490**	No	No
Lead (ug/l)	7.5	11	0.0	1.0	**7.5**	7.5	49	0.0	1.0	**7.5**	**8.1**	**16**	No	No
Nickel (ug/l)	22	11	0.3	1.3	**29**	52	49	0.5	1.0	**52**	**57**	**110**	No	No
Vanadium (ug/l)	46	10	1.0	2.3	**110**	160	41	2.0	1.2	**190**	**22**	**44**	Yes	Yes
Zinc (ug/l)	99	11	0.8	1.9	**190**	330	49	1.6	1.1	**360**	**130**	**260**	Yes	Yes
Total Dissolved Solids (mg/l)	257	10	0.1	1.1	**280**	300	41	0.2	1.0	**300**	**610**	**1200**	No	No
Chloride (mg/l)	42	11	0.1	1.1	**46**	58	48	0.2	1.0	**58**	**190**	**380**	No	No
Fluoride (mg/l)	0.53	10	0.2	1.2	**0.64**	0.56	42	0.3	1.0	**0.56**	**0.82**	**1.6**	No	No
Sulfate (mg/l)	79	10	0.4	1.5	**120**	170	42	0.6	1.1	**190**	**200**	**410**	No	No
Ammonia-N (mg/l) :														
Summer %,!	0.31	10	0.5	1.6	**0.50**	0.82	42	0.9	1.1	**0.90**	**0.54**	**1.1**	No	No
Winter %,!	0.31	10	0.5	1.6	**0.50**	0.82	42	0.9	1.1	**0.90**	**0.55**	**1.1**	No	No

* Effluent data were obtained from the June 2009 permit renewal application update and additional information submitted in January 2011 and April 2011.

% Summer months are July through September, and winter months are October through June.

! Seasonal PEQs were not developed since less than one year of data are available.

@ Monthly average PELs were calculated based on the applicable sampling frequency in a month.

8/2/2011

TABLE 7
WATER QUALITY-BASED EFFLUENT LIMITATIONS
FOR ARCELORMITTAL INDIANA HARBOR - INDIANA HARBOR WEST

Parameter	Quantity or Loading			Quality or Concentration		
	Monthly Average	Daily Maximum	Units	Monthly Average @	Daily Maximum	Units
Outfall 002 (11.2 mgd)						
Mercury	0.00012	0.00030	lbs/day	1.3	3.2	ng/l
Total Residual Chlorine	1.5	3.5	lbs/day	16	37	ug/l
Outfall 009 (55.3 mgd)						
Lead	5.1	9.7	lbs/day	11	21	ug/l
Mercury	0.00060	0.0015	lbs/day	1.3	3.2	ng/l
Zinc	17	34	lbs/day	37	74	ug/l
Ammonia (as N)						
Summer +	740	1,400	lbs/day	1,600	3,100	ug/l
Winter +	740	1,400	lbs/day	1,600	3,100	ug/l
Total Residual Chlorine	5.5	13	lbs/day	12	28	ug/l
Whole Effluent Toxicity (WET)						
Acute #					1.0	TUa
Chronic &				2.2		TUc
Outfall 010 (36.6 mgd)						
Mercury	0.00040	0.00098	lbs/day	1.3	3.2	ng/l
Total Residual Chlorine	3.7	8.6	lbs/day	12	28	ug/l
Outfall 011 (23.4 mgd)						
Lead	5.1	10	lbs/day	26	52	ug/l
Mercury	0.00025	0.00062	lbs/day	1.3	3.2	ng/l
Zinc	35	68	lbs/day	180	350	ug/l
Total Residual Chlorine	2.5	5.9	lbs/day	13	30	ug/l
Whole Effluent Toxicity (WET)						
Acute #					1.0	TUa
Chronic &				5.8		TUc
Outfall 012 (70.0 mgd)						
Lead	4.7	9.3	lbs/day	8.1	16	ug/l
Zinc	76	150	lbs/day	130	260	ug/l
Vanadium	13	26	lbs/day	22	44	ug/l
Naphthalene	12	25	lbs/day	21	43	ug/l
Tetrachloroethylene	29	58	lbs/day	49	99	ug/l
Total Residual Chlorine	5.8	12	lbs/day	10	20	ug/l
Whole Effluent Toxicity (WET)						
Acute #					1.0	TUa
Chronic &				1.0		TUc

@ Monthly average WQBELs were calculated based on the applicable sampling frequency in a month, except for WET.
+ Summer months are July through September, and Winter months are October through June.
# This value is the Toxicity Reduction Evaluation (TRE) trigger for acute WET testing.
& This value is the Toxicity Reduction Evaluation (TRE) trigger for chronic WET testing.

8/2/2011

TABLE 8
ANTIDEGRADATION
FOR ARCELORMITTAL INDIANA HARBOR - INDIANA HARBOR WEST

Parameter	Existing Permit Limits				Proposed Permit Limits				New or Increased Permit Limit for a Non-BCC or New or Increased Loading of a BCC?			
	Loading (lbs/day)		Concentration (ug/l)		Loading (lbs/day)		Concentration (ug/l)		Loading (lbs/day)		Concentration (ug/l)	
	Monthly Average	Daily Maximum	Monthly Average	Daily Maximum	Monthly Average	Daily Maximum	Monthly Average	Daily Maximum	Monthly Average	Daily Maximum	Monthly Average	Daily Maximum
Outfall 002 (11.2 mgd)												
Total Suspended Solids	Report	Report	Report	Report	Report	Report	Report	Report				
Oil & Grease	--	--	Report	Report	Report	Report	Report	Report				
Mercury	--	--	--	--	0.00012	0.00030	0.0013	0.0032	New (1)	New (1)	New (1)	New (1)
Fluoride	--	--	--	--	Report	Report	Report	Report				
Free Cyanide	--	--	--	--	Report	Report	Report	Report				
Total Residual Oxidants	--	--	--	50	--	--	--	--				
Total Residual Chlorine	--	--	20	40	1.5	3.5	16	37	New (2)	New (2)	No	No
Temperature (°F)	--	--	--	--	--	--	Report	Report				
Thermal Discharge (BTU/Hr.)	--	--	--	--	Report	Report	--	--				
pH (s.u.)	--	--	6.0 - 9.5		--	--	6.0 - 9.0				No	
Outfalls 003, 004, 005 (Emergency Overflow)												
Total Suspended Solids	Report	Report	Report	Report	Outfalls 003, 004 and 005 Removed from Permit							
Oil & Grease	--	--	Report	Report								
Lead	Report	Report	Report	Report								
Tin	Report	Report	Report	Report								
Zinc	Report	Report	Report	Report								
Ammonia (as N)	Report	Report	Report	Report								
Total Cyanide	Report	Report	Report	Report								
Phenols (4AAP)	Report	Report	Report	Report								
pH (s.u.)	--	--	Report	Report								
Outfall 008 (Emergency Overflow)												
Total Suspended Solids	Report	Report	Report	Report	Outfall 008 Removed from Permit							
Oil & Grease	Report	Report	Report	Report								
Ammonia (as N)	Report	Report	Report	Report								
Total Cyanide	Report	Report	Report	Report								
Phenols (4AAP)	Report	Report	Report	Report								
Benzene	Report	Report	Report	Report								
Benzo(a)pyrene	Report	Report	Report	Report								
Naphthalene	Report	Report	Report	Report								
pH (s.u.)	--	--	Report	Report								
Outfall 009 (55.3 mgd)												
Total Suspended Solids	Report	Report	Report	Report	Report	Report	Report	Report				
Oil & Grease	--	--	Report	Report	Report	Report	Report	Report				
Iron	--	--	Report	Report	--	--	--	--				
Lead	--	--	--	--	Report	Report	Report	Report				
Mercury	--	--	--	--	0.00060	0.0015	0.0013	0.0032	New (1)	New (1)	New (1)	New (1)
Zinc	--	--	--	--	Report	Report	Report	Report				
Chloride	--	--	Report	Report	--	--	--	--				
Fluoride	--	--	Report	Report	Report	Report	Report	Report				
Sulfate	--	--	Report	Report	--	--	--	--				
Ammonia (as N)	84 (Net)	236 (Net)	Report	Report	425 (Net)	1,000 (Net)	Report	Report	No	No		
Free Cyanide	--	--	--	--	Report	Report	Report	Report				
Total Cyanide	Report*	Report*	Report	Report	--	--	--	--				
Phenols (4AAP)	--	4.4 (Net)	Report	Report	Report	11 (Net)	Report	Report		No		
Total Residual Oxidants	--	--	--	50	--	--	--	--				
Total Residual Chlorine	--	--	20	40	5.5	13	12	28	New (2)	New (2)	No	No
Temperature (°F)	--	--	--	--	--	--	Report	Report				
Thermal Discharge (BTU/Hr.)	--	--	--	--	Report	Report	--	--				
pH (s.u.)	--	--	6.0 - 9.0		--	--	6.0 - 9.0				No	
Internal Outfall 509												
Total Suspended Solids	New Outfall				736	2,213	Report	Report	No	No		
Oil & Grease					38.1	114	Report	Report	New (3)	No		
Lead					2.98	8.95	Report	Report	No	No		
Zinc					4.46	13.4	Report	Report	No	No		
Ammonia (as N)					Report	Report	Report	Report				
Total Cyanide					29.8	59.6	Report	Report	No	No		
Phenols (4AAP)					Report	Report	Report	Report				
2,3,7,8 - TCDF					--	--	--	$<10 \times 10^{-6}$		New (4)		

8/2/2011

TABLE 9
ANTIDEGRADATION
FOR ARCELORMITTAL INDIANA HARBOR - INDIANA HARBOR WEST

Parameter	Existing Permit Limits				Proposed Permit Limits				New or Increased Permit Limit for a Non-BCC or New or Increased Loading of a BCC?			
	Loading (lbs/day)		Concentration (ug/l)		Loading (lbs/day)		Concentration (ug/l)		Loading (lbs/day)		Concentration (ug/l)	
	Monthly Average	Daily Maximum	Monthly Average	Daily Maximum	Monthly Average	Daily Maximum	Monthly Average	Daily Maximum	Monthly Average	Daily Maximum	Monthly Average	Daily Maximum
Outfall 010 (36.6 mgd)												
Total Suspended Solids	Report	Report	Report	Report	Report	Report	Report	Report				
Oil & Grease	--	--	Report	Report	Report	Report	Report	Report				
Iron	--	--	Report	Report	--	--	--	--				
Lead	--	--	--	--	Report	Report	Report	Report				
Mercury	--	--	--	--	0.00040	0.00098	0.0013	0.0032	New (1)	New (1)	New (1)	New (1)
Zinc	--	--	--	--	Report	Report	Report	Report				
Chloride	--	--	Report	Report	--	--	--	--				
Fluoride	--	--	Report	Report	Report	Report	Report	Report				
Sulfate	--	--	Report	Report	--	--	--	--				
Ammonia (as N)	180 (Net)	402 (Net)	Report	Report	100 (Net)	300 (Net)	Report	Report	No	No		
Free Cyanide	--	--	--	--	Report	Report	Report	Report				
Total Cyanide	Report*	Report*	Report	Report	--	--	--	--				
Phenols (4AAP)	--	6.6 (Net)	Report	Report	Report	5 (Net)	Report	Report		No		
Total Residual Oxidants	--	--	--	50	--	--	--	--				
Total Residual Chlorine	--	--	20	40	3.7	8.6	12	28	New (2)	New (2)	No	No
Temperature (°F)	--	--	--	--	--	--	Report	Report				
Thermal Discharge (BTU/Hr.)	--	--	--	--	Report	Report	--	--				
pH (s.u.)	--	--	6.0 - 9.0		--	--	6.0 - 9.0				No	
Outfall 011 (23.4 mgd)												
Total Suspended Solids	3,425	9,111	Report	Report	Report	Report	Report	Report				
Oil & Grease	--	1,500	Report	Report	Report	Report	Report	Report				
Iron	--	--	Report	Report	--	--	--	--				
Lead	10.19	30.58	Report	Report	Report	Report	Report	Report				
Mercury	--	--	--	--	0.00025	0.00062	0.0013	0.0032	New (5)	New (5)	New (5)	New (5)
Zinc	24.70	62.00	Report	Report	Report	Report	Report	Report				
Chloride	--	--	Report	Report	--	--	--	--				
Fluoride	--	--	Report	Report	Report	Report	Report	Report				
Sulfate	--	--	Report	Report	--	--	--	--				
Ammonia (as N)	336 (Net)	812 (Net)	Report	Report	75 (Net)	150 (Net)	Report	Report	No	No		
Free Cyanide					Report	Report	Report	Report				
Total Cyanide	31.38*	62.70*	Report	Report	--	--	--	--				
Phenols (4AAP)	--	10.0 (Net)	Report	Report	Report	5 (Net)	Report	Report		No		
Total Residual Oxidants	--	--	--	50	--	--	--	--				
Total Residual Chlorine	--	--	20	40	2.5	5.9	13	30	New (2)	New (2)	No	No
Temperature (°F)	--	--	--	--	--	--	Report	Report				
Thermal Discharge (BTU/Hr.)	--	--	--	--	Report	Report	--	--				
pH (s.u.)	--	--	6.0 - 9.0		--	--	6.0 - 9.0				No	
Internal Outfall 701	New Outfall											
Total Suspended Solids					21.2	59.4	Report	Report	No	No		
Lead					0.255	0.764	Report	Report	No	No		
Zinc					0.382	1.15	Report	Report	No	No		
Internal Outfall 702	New Outfall											
Total Suspended Solids					60.3	169	Report	Report	No	No		
Oil & Grease					24.0	72.4	Report	Report	New (6)	No		
Lead					0.724	2.17	Report	Report	No	No		
Zinc					1.08	3.26	Report	Report	No	No		
Side Table [a] Combined Outfalls 009, 010 and 011	Existing Permit Limits				Combination of Proposed 009 (or 509), 010 and 011 (or 701 and 702)				New or Increased Permit Limit for a Non-BCC or New or Increased Loading of a BCC?			
Total Suspended Solids	3,425	9,111	Report	Report	817.5	2,441.4	Report	Report	No	No		
Oil & Grease	--	1,500	Report	Report	62.1	186.4	Report	Report	New (b)	No		
Lead	10.19	30.58	Report	Report	3.959	11.884	Report	Report	No	No		
Zinc	24.70	62.00	Report	Report	5.922	17.81	Report	Report	No	No		
Ammonia (as N)	600 (Net)	1450 (Net)	Report	Report	600 (Net)	1,450 (Net)	Report	Report	No	No		
Total Cyanide	31.38	62.70	Report	Report	29.8	59.6	Report	Report	No	No		
Phenols (4AAP)	--	21 (Net)	Report	Report	Report	21 (Net)	Report	Report		No		
pH (s.u.)	--	--	6.0 - 9.0		--	--	6.0 - 9.0				No	

8/2/2011

TABLE 10
ANTIDEGRADATION
FOR ARCELORMITTAL INDIANA HARBOR - INDIANA HARBOR WEST

Parameter	Existing Permit Limits				Proposed Permit Limits				New or Increased Permit Limit for a Non-BCC or New or Increased Loading of a BCC?			
	Loading (lbs/day)		Concentration (ug/l)		Loading (lbs/day)		Concentration (ug/l)		Loading (lbs/day)		Concentration (ug/l)	
	Monthly Average	Daily Maximum	Monthly Average	Daily Maximum	Monthly Average	Daily Maximum	Monthly Average	Daily Maximum	Monthly Average	Daily Maximum	Monthly Average	Daily Maximum
Outfall 012 (70.0 mgd)												
Total Suspended Solids	New Outfall				Report	Report	Report	Report				
Oil & Grease					Report	Report	Report	Report				
Lead					Report	Report	Report	Report				
Mercury					Report	Report	Report	Report				
Vanadium					13	26	22	44	New (7)	New (7)	New (7)	New (7)
Zinc					76	150	130	260	New (7)	New (7)	New (7)	New (7)
Ammonia (as N)					Report	Report	Report	Report				
Total Residual Chlorine					5.8	12	10	20	New (7)	New (7)	New (7)	New (7)
pH (s.u.)					--	--	6.0 - 9.0				New (8)	
Internal Outfall 111												
Total Suspended Solids	5,663	14,576	Report	Report	Report	Report	Report	Report				
Oil & Grease	Report	5,344	Report	Report	Report	Report	Report	Report				
Iron	Report	Report	Report	Report	--	--	--	--				
pH (s.u.)	--	--	6.0 - 9.0		--	--	--	--				
Internal Outfall 211												
Total Suspended Solids	Report	Report	Report	Report	Report	Report	Report	Report				
Oil & Grease	Report	Report	Report	Report	Report	Report	Report	Report				
Lead	5.28	15.83	Report	Report	3.25	9.3	Report	Report	No	No		
Zinc	5.25	15.70	Report	Report	3.22	9.65	Report	Report	No	No		
Naphthalene	--	--	--	--	--	1.11	--	Report		New (9)		
Tetrachloroethylene	--	--	--	--	--	1.68	--	Report		New (9)		
pH (s.u.)	--	--	6.0 - 9.5		--	--	--	--				
Internal Outfall 411+ (Combined 111/211)												
Total Suspended Solids	5,663	14,576	Report	Report	4,381	11,365	Report	Report	No	No		
Oil & Grease	Report	5,344	Report	Report	1,048	3,089	Report	Report	New (10)	No		

Footnotes:

* The sum of the monthly average total cyanide mass values at Outfalls 009, 010 and 011 shall not exceed the monthly average mass limits at Outfall 011 and the sum of the daily maximum total cyanide mass values at Outfalls 009, 010 and 011 shall not exceed the daily maximum mass limits at Outfall 011.

\+ Outfall 411 is not mentioned in the existing permit, but is an administrative construct to track compliance with the combined discharges of oil & grease and TSS from Outfalls 111 and 211. In the existing permit, when Outfall 211 is not discharging through Outfall 111, oil & grease and TSS are measured concurrently at Outfalls 111 and 211 and the sum of the mass loadings is compared to the limits. Outfall 211 actually does not discharge through Outfall 111, but oily wastewater from the 84-inch hot strip mill is treated at the oily waste treatment plant prior to discharge through Outfall 211. Therefore, in the renewal permit, oil & grease and TSS will be monitored at Outfalls 111 and 211 and always combined and limited at new Outfall 411.

New or Increased Permit Limit?

(a) For those parameters that are limited through TBELs in the current permit at Outfall 009, 010 or 011, the determination of whether there is a new or increased permit limit was made by combining the proposed limits for Outfalls 009 (or 509), 010 and 011 (or 701 and 702) and comparing them to the combined existing limits at Outfalls 009, 010 and 011. The comparison is included in this Side Table.

(b) The new combined monthly average TBEL is due to new monthly average TBELs for oil & grease at Internal Outfalls 509 and 702. Monthly average and daily maximum TBELs for oil & grease were authorized at Outfall 011 under the current permit, but only a daily maximum limit was applied. The Fact Sheet of the 1986 permit includes the calculation of monthly average and daily maximum TBELs for oil & grease. The TBELs were a combination of the monthly average and daily maximum mass allowed for a number of process operations with separate TBELs. Monthly average TBELs were not provided for several of the operations so only a combined daily maximum TBEL was applied at Outfall 011. A portion of the calculated daily maximum TBEL for Outfall 011 was bubbled to Internal Outfalls 111 and 211. For those operations with monthly average and daily maximum TBELs for oil & grease, the monthly average was approximately one-third of the daily maximum. Through application of BPJ, IDEM has determined that for the process operations included under Outfall 011 in the 1986 permit that did not have monthly average TBELs, the monthly average mass limits that were authorized, but not applied, should be calculated using one-third of the daily maximum TBEL. Since a portion of the daily maximum TBELs was bubbled resulting in lower limits at Outfall 011 than calculated based on the process operations, the monthly average limit that was authorized, but not applied at Outfall 011 was determined to be 500 lbs/day and was calculated as one-third of the existing daily maximum limit of 1,500 lbs/day. The new combined monthly average TBEL does not allow an increase above what was authorized, but not applied in the current permit.

Significant Lowering of Water Quality?

(1) The new limits for mercury are based on a reasonable potential analysis using effluent monitoring data. The new limits fall under the antidegradation exemption in 327 IAC 5-2-11.3(b)(1)(C)(ii) so they do not cause a significant lowering of water quality and antidegradation under 327 IAC 5-2-11.3(b) is satisfied. This exemption also applies to 327 IAC 5-2-11.7(a)(2) so the new limits do not cause a significant lowering of water quality in the OSRW.

(2) The current permit has a concentration limit for this parameter that is less stringent than a WQBEL in the proposed permit. The existing effluent flow was used to calculate the WQBELs for the proposed permit so the new limit will not result in a calculated concentration increase outside of the mixing zone under 327 IAC 5-2-11.3(b)(1)(B)(i) and antidegradation under 327 IAC 5-2-11.3(b) is satisfied. Since the new limit does not cause a significant lowering under 327 IAC 5-2-11.3(b)(1)(B), it does not cause a significant lowering in the OSRW

in accordance with Non-Rule Policy Document Water-002-NPD.

(3) As discussed in Footnote (b), the new monthly average mass limit for oil & grease at Internal Outfall 509 does not allow an increase above what was authorized, but not applied in the current permit. The monthly average TBEL does not result in a monthly average oil & grease concentration of greater than 10 mg/l at final Outfall 009 to meet the narrative criterion. This will ensure that the new limit does not result in a lowering of water quality for oil & grease in the Indiana Harbor Canal and antidegradation under 327 IAC 5-2-11.3(a) is satisfied. The new TBEL is a new application of Federal Effluent Limitations Guidelines and falls under the antidegradation exemption in 327 IAC 5-2-11.3(b)(1)(C)(ii)(DD). This exemption applies to 327 IAC 5-2-11.7(a)(2) so the new limit does not cause a significant lowering of water quality in the OSRW.

(4) A new concentration TBEL for 2,3,7,8-TCDF is required due to the addition of a TBEL for this parameter in the 2002 revision of the Effluent Limitations Guidelines for the Iron and Steel Manufacturing Point Source Category. Therefore, a TBEL for this pollutant was not applicable when the 1986 permit was issued. The production related to sintering listed in the Fact Sheet of the 1986 permit is 3,829 tons/day whereas the production related to sintering used to calculate TBELs in the permit renewal is 3,800 tons/day. The new limit is not a result of changes in pollutant loading and, since the production has not increased, will not allow an increase in pollutant loading because the limit is set at less than the minimum level and the facility has installed treatment to meet the new TBEL. The new TBEL is a result of the application of a new Federal Effluent Limitation Guideline and falls under the antidegradation exemption in 327 IAC 5-2-11.3(b)(1)(C)(ii)(DD) so it does not cause a significant lowering of water quality and antidegradation under 327 IAC 5-2-11.3(b) is satisfied. This exemption also applies to 327 IAC 5-2-11.7(a)(2) so the new limit does not cause a significant lowering of water quality in the OSRW.

(5) The new limits for mercury are based on a reasonable potential analysis using effluent monitoring data. The new limits are not a result of changes in pollutant loading and will not allow an increase in pollutant loading since the projected effluent quality is greater than the proposed effluent limits and the existing discharge flow was used to calculate the proposed mass limits. Therefore, the new limits do not cause a lowering of water quality for mercury and antidegradation under 327 IAC 5-2-11.3(a) is satisfied. The new limits fall under the antidegradation exemption in 327 IAC 5-2-11.3(b)(1)(C)(ii). This exemption applies to 327 IAC 5-2-11.7(a)(2) so the new limits do not cause a significant lowering of water quality in the OSRW.

(6) As discussed in Footnote (b), the new monthly average mass limit for oil & grease at Internal Outfall 702 does not allow an increase above what was authorized, but not applied in the current permit. The new TBEL is a new application of Federal Effluent Limitations Guidelines and falls under the antidegradation exemption in 327 IAC 5-2-11.3(b)(1)(C)(ii)(DD). Therefore, the new limit does not cause a significant lowering of water quality and antidegradation under 327 IAC 5-2-11.3(b) is satisfied. This exemption applies to 327 IAC 5-2-11.7(a)(2) so the new limit does not cause a significant lowering of water quality in the OSRW.

(7) The new limits for this parameter are based on a reasonable potential analysis using effluent monitoring data. The new limits fall under the antidegradation exemption in 327 IAC 5-2-11.7(b)(2)(A) so they are allowed and antidegradation under 327 IAC 5-2-11.7 is satisfied.

(8) The new limits for pH fall under the antidegradation exemption in 327 IAC 5-2-11.7(b)(2)(A) so they are allowed and antidegradation under 327 IAC 5-2-11.7 is satisfied.

(9) New TBELs for naphthalene and tetrachloroethylene are being applied in the proposed permit. TBELs for these parameters were authorized under the current permit, but were not applied. Based on the production numbers in the Fact Sheet of the 1986 permit, the daily maximum TBELs would have been 2.12 lbs/day for naphthalene and 3.18 lbs/day for tetrachloroethylene, so the new limits do not allow an increase above what was authorized, but not applied in the current permit. The new TBELs fall under the antidegradation exemption in 327 IAC 5-2-11.7(b)(2)(D) so they are allowed and antidegradation under 327 IAC 5-2-11.7 is satisfied.

(10) A new monthly average TBEL for oil & grease is being applied in the proposed permit at Internal Outfall 411 which is a mathematical combination of the discharges from Internal Outfalls 111 and 211. Monthly average and daily maximum TBELs for oil & grease were authorized for the combination of Internal Outfalls 111 and 211 under the current permit, but only a daily maximum limit was applied. The Fact Sheet of the 1986 permit includes the calculation of monthly average and daily maximum TBELs for oil & grease. The TBELs were a combination of the monthly average and daily maximum mass allowed for several process operations with separate TBELs. Monthly average TBELs were not provided for the Hot Strip Mill under 40 CFR 420.72(c)(1). A portion of the calculated daily maximum TBELs for other process operations at the facility were also bubbled to Internal Outfalls 111 and 211. Through application of BPJ, IDEM has calculated monthly average mass limits for the 84-inch Hot Strip Mill at one-third of the daily maximum for the permit renewal. In the Fact Sheet of the 1986 permit, the combined monthly average allowance for the process operations contributing to Internal Outfalls 111 and 211 that had monthly average TBELs was 321.31 lbs/day and the daily maximum TBEL for the Hot Strip Mill was 3142.2 lbs/day. The amount of daily maximum mass that was bubbled to Internal Outfalls 111 and 211 was 1154 lbs/day. The monthly average mass for the Hot Strip Mill calculated as one-third of the daily maximum is 1047.4 lbs/day. The monthly average mass bubbled calculated through BPJ as one-third of the daily maximum is 385 lbs/day. The monthly average oil & grease limit for Internal Outfalls 111 and 211 that was authorized, but not applied in the 1986 permit is 1754 lbs/day. Therefore, the new monthly average limit does not allow an increase above what was authorized, but not applied in the current permit. The new TBEL is a new application of Federal Effluent Limitations Guidelines and falls under the antidegradation exemption in 327 IAC 5-2-11.7(b)(2)(D) so it is allowed and antidegradation under 327 IAC 5-2-11.7 is satisfied.

8/2/2011

Attachment B

Non-Objection Letter

UNITED STATES ENVIRONMENTAL PROTECTION AGENCY
REGION 5
77 WEST JACKSON BOULEVARD
CHICAGO, IL 60604-3590

IDEM
OFFICE OF
WATER QUALITY

AUG 9 2011

2011 AUG 15 A 11:06

WN-16J

REPLY TO THE ATTENTION OF:

Bruno Pigott, Assistant Commissioner
Office of Water Quality
Indiana Department of Environmental Management
100 North Senate Avenue
Indianapolis, Indiana 46204

Re: ArcelorMittal – Indiana Harbor West
East Chicago, Indiana
NPDES Permit No: IN0000205

Dear Mr. Pigott:

The U.S. Environmental Protection Agency has reviewed the draft National Pollutant Discharge Elimination System (NPDES) permit and fact sheet for the ArcelorMittal – Indiana Harbor West facility. The draft permit has been discussed with your staff and we have not identified any issues that would cause the Agency to object to issuance of the permit as drafted. We also concur with your tentative decision to grant the renewal of the Clean Water Act Section 301(g) variance for Ammonia as N and Phenols in the wastewater discharges from the facility. Should meaningful changes occur after the public comment period, the U.S. Environmental Protection Agency reserves the right to object to the proposed permit.

Indiana DEM must resubmit the draft permit to EPA for review if:

a. Prior to the actual date of issuance, an effluent guideline or standard is promulgated which is applicable to the permit and would require revision or modification of a limitation or condition found in the draft permit.

b. A variance is granted and permit conditions are modified to incorporate the variance.

c. There are additional revisions to be incorporated into the final permit which have not been reviewed by this Agency.

When the final permit is issued, please forward one copy and significant comments received during the public comment period to this office at the above address, attention NPDES Programs Branch.

Sincerely,

Kevin M. Pierard, Chief
NPDES Programs Branch

cc: Richard Hamblin, IDEM

Recycled/Recyclable • Printed with Vegetable Oil Based Inks on 100% Recycled Paper (50% Postconsumer)

Attachment C

ArcelorMittal Comment Attachments
IHC-1 Data, IHC-2 Data, 1997/1998 In-Stream Temperature Monitoring Studies, IDEM Fixed Station Monitoring Data for Cyanide, and Open Waters of Lake Michigan Map

ATTACHMENT IHC-1

Calculation of Dissolved Metals Translators from IDEM fixed station monitoring data

IHC-2 Dickey Road

Copper

Date	Copper (Dissolved) (ug/L)	Copper (Dissolved) for DMT (ug/L)	Copper (Total) (ug/L)	Dissolved Fraction
1/8/2004	1.19	1.19	3.44	0.35
2/18/2004	1.3	1.3	2.39	0.54
3/30/2004	< 1	1	3.72	0.27
4/21/2004	1.24	1.24	3.45	0.36
5/26/2004	1.21	1.21	2.62	0.46
6/16/2004	1.13	1.13	2.42	0.47
7/19/2004	1.37	1.37	2.34	0.59
8/16/2004	1.25	1.25	2.59	0.48
9/20/2004	1.41	1.41	2.81	0.50
10/25/2004	1.29 (EDJ)		2.45	
11/29/2004	1.04	1.04	2.54	0.41
12/20/2004	1.09	1.09	2.46	0.44
1/12/2005	1.1	1.1	2.74	0.40
2/23/2005	1.03	1.03	2.14	0.48
3/21/2005	1.12	1.12	2.43	0.46
4/27/2005	1.19	1.19	2.63	0.45
6/27/2005	1.1	1.1	1.91	0.58
7/27/2005	1.04	1.04	2.16	0.48
8/22/2005	1.23	1.23	2.5	0.49
9/26/2005	1.19	1.19	2.34	0.51
10/26/2005	1.15	1.15	2.42	0.48
11/28/2005	< 1	1	2.7	0.37
12/14/2005	< 1	1	4.28	0.23
1/12/2006	1.08	1.08	3.11	0.35
2/6/2006	1.21	1.21	2.63	0.46
3/15/2006	1.38	1.38	2.8	0.49
4/26/2006	1.52	1.52	2.83	0.54
5/22/2006	1.53	1.53	3.34	0.46
6/21/2006	1.67	1.67	2.67	0.63
7/11/2006	1.62	1.62	2.51	0.65
8/14/2006	1.58	1.58	3.54	0.45
9/25/2006	1.59	1.59	3.3	0.48
10/18/2006			3	
11/27/2006			2.61	
12/18/2006			2.55	
1/22/2007			2.73	
2/19/2007			2.68	
3/28/2007			3.73	
4/25/2007			5.04	
5/30/2007			2.61	
6/20/2007			3.26	
7/30/2007			2.16	
8/27/2007	1.98	1.98	2.68	0.74
9/24/2007	1.57	1.57	2.51	0.63
10/29/2007	1.48	1.48	4.52	0.33
11/19/2007	1.59	1.59	4.33	0.37
12/17/2007	1.34	1.34	2.52	0.53
1/9/2008	1.54	1.54	3.43	0.45

Lead

Date	Lead (Dissolved) (ug/L)	Lead (Dissolved) for DMT (ug/L)	Lead (Total) (ug/L)	Dissolved Fraction
1/8/2004	< 1	1	8.47	0.118
2/18/2004	< 1	1	3.06	0.327
3/30/2004	< 1	1	7.65	0.131
4/21/2004	< 1	1	7.97	0.125
5/26/2004	< 1	1	4.77	0.210
6/16/2004	< 1	1	4.95	0.202
7/19/2004	< 1	1	3.25	0.308
8/16/2004	< 1	1	4.77	0.210
9/20/2004	< 1	1	4.85	0.206
10/25/2004	< 1	1	3.26	0.307
11/29/2004	< 1	1	3.71	0.270
12/20/2004	< 1	1	3.11	0.322
1/12/2005	< 1	1	3.57	0.280
2/23/2005	< 1	1	2.42	0.413
3/21/2005	< 1	1	3.09	0.324
4/27/2005	< 1	1	5.12	0.195
6/27/2005	< 1	1	3.51	0.285
7/27/2005	< 1	1	4.08	0.246
8/22/2005	< 1	1	4.87	0.205
9/26/2005	< 1	1	7	0.143
10/26/2005	< 1	1	3.19	0.313
11/28/2005	< 1	1	3.8	0.263
12/14/2005	< 1	1	9.88	0.101
1/12/2006	< 1	1	5.86	0.171
2/6/2006	< 1	1	2.73	0.366
3/15/2006	< 1	1	4.26	0.235
4/26/2006	< 1	1	4.78	0.209
5/22/2006	< 1	1	5.19	0.193
6/21/2006	1.06	1.06	4.2	0.252
7/11/2006	< 1	1	2.86	0.350
8/14/2006	< 1	1	5.93	0.169
9/25/2006	< 1	1	5.7	0.175
10/18/2006			3.11	
11/27/2006			2.82	
12/18/2006			2.94	
1/22/2007			2.91	
2/19/2007			2.72	
3/28/2007			6.26	
4/25/2007			7.89	
5/30/2007			3.35	
6/20/2007			4.59	
7/30/2007			1.66	
8/27/2007	< 1	1	2.08	0.481
9/24/2007	< 1	1	3.24	0.309
10/29/2007	< 1	1	7.86	0.127
11/19/2007	< 1	1	7.7	0.130
12/17/2007	< 1	1	2.35	0.426
1/9/2008	< 1	1	4.53	0.221

Zinc

Date	Zinc (Dissolved) (ug/L)	Zinc (Dissolved) for DMT (ug/L)	Zinc (Total) (ug/L)	Dissolved Fraction
1/8/2004	8.1	8.1	43.7	0.185
2/18/2004	8.67	8.67	21	0.413
3/30/2004	9.42	9.42	37.6	0.251
4/21/2004	11.2	11.2	37.4	0.299
5/26/2004	13.6	13.6	29.1	0.467
6/16/2004	4.13	4.13	24.6	0.168
7/19/2004	7.66	7.66	17.8	0.430
8/16/2004	5.94	5.94	24.7	0.240
9/20/2004				
10/25/2004	6.95	6.95	18.4	0.378
11/29/2004	15.4	15.4	31.6	0.487
12/20/2004	8.93	8.93	25.5	0.350
1/12/2005	13.1	13.1	31.8	0.412
2/23/2005	10.2	10.2	20.6	0.459
3/21/2005	9.6	9.6	22.4	0.429
4/27/2005	7.86	7.86	44.4	0.177
6/27/2005	9.62	9.62	19.1	0.504
7/27/2005	9	9	18.4	0.489
8/22/2005	8.87	8.87	23.4	0.379
9/26/2005	9.65	9.65	21.6	0.447
10/26/2005	14.2	14.2	25.5	0.557
11/28/2005	11.5	11.5	25.2	0.456
12/14/2005	11.8	11.8	50.1	0.236
1/12/2006	11.4	11.4	35.5	0.321
2/6/2006	11.1	11.1	22.7	0.489
3/15/2006	13.5	13.5	30.9	0.437
4/26/2006	10.1	10.1	27.4	0.369
5/22/2006	11.9	11.9	28.6	0.416
6/21/2006	9.96	9.96	22.2	0.449
7/11/2006	7.34	7.34	20.6	0.356
8/14/2006	9.02	9.02	29.3	0.308
9/25/2006	10.5	10.5	29	0.362
10/18/2006			23.1	
11/27/2006			21.5	
12/18/2006			25.6	
1/22/2007			23.7	
2/19/2007			34.2	
3/28/2007			33.2	
4/25/2007			42.2	
5/30/2007			18.1	
6/20/2007			23.6	
7/30/2007			13.8	
8/27/2007	10.9	10.9	16.9	0.645
9/24/2007	9.38	9.38	18.2	0.515
10/29/2007	11.9	11.9	37.2	0.320
11/19/2007	9.24	9.24	38.9	0.238
12/17/2007	14.5	14.5	22.5	0.644
1/9/2008	17.5	17.5	35.4	0.494

Copper (January 2004 to January 2008)

No. of Samples	37
Geometric mean of dissolved fractions	0.457
95th percentile of dissolved fractions	0.629

Lead (January 2004 to January 2008)

No. of Samples	38
Geometric mean of dissolved fractions	0.228
95th percentile of dissolved fractions	0.415

Zinc (January 2004 to January 2008)

No. of Samples	37
Geometric mean of dissolved fractions	0.375
95th percentile of dissolved fractions	0.574

ATTACHMENT IHC-1

Calculation of Dissolved Metals Translators from IDEM fixed station monitoring data

IHC-3S Columubus Drive Fixed Station Monitoring Data (Station IHC-3S)

Copper

Date	Copper (Dissolved) (ug/L)	Copper (Dissolved) for DMT (ug/L)	Copper (Total) (ug/L)	Dissolved Fraction
1/7/2004	1.19	1.19	4.3	0.277
2/18/2004	1.13	1.13	4.26	0.265
3/30/2004	1.03	1.03	3.56	0.289
4/21/2004	1.36	1.36	4.99	0.273
5/26/2004	1.28	1.28	3.12	0.410
6/16/2004	1.17	1.17	2.54	0.461
7/19/2004	1.23	1.23	1.55	0.794
8/16/2004	1.26	1.26	2.33	0.541
9/20/2004	1.33	1.33	2.62	0.508
10/25/2004	1.87 (fDJ)		3.1	
11/29/2004	1.08	1.08	2.69	0.401
12/20/2004	< 1	1	6.52	0.153
1/12/2005	1.1	1.1	5.64	0.195
2/23/2005	1.21	1.21	2.54	0.476
3/22/2005	1.07	1.07	3.21	0.333
4/27/2005	1.23	1.23	3.66	0.336
5/24/2005	1.17	1.17	3.33	0.351
6/27/2005	< 1	1	1.63	0.613
7/27/2005	1.06	1.06	1.85	0.573
8/22/2005	1.22	1.22	2.04	0.598
9/26/2005	1.55	1.55	2.41	0.643
10/26/2005	1.28	1.28	2.68	0.478
11/28/2005	< 1	1	24.2	0.041
12/15/2005	< 1	1	2.33	0.429
1/11/2006	1.09	1.09	4.6	0.235
2/6/2006	1.05	1.05	3.69	0.285
3/15/2006	1.55	1.55	4.88	0.318
4/26/2006	1.5	1.5	6.84	0.219
5/22/2006	1.58	1.58	3.9	0.405
6/21/2006	1.49	1.49	2.67	0.558
7/10/2006	1.65	1.65	2.22	0.743
8/14/2006	1.61	1.61	2.51	0.641
9/25/2006	1.78	1.78	4.86	0.366
10/18/2006			3.76	
11/27/2006			3.36	
12/18/2006			3	
1/22/2007			3.23	
2/20/2007			3.16	
3/28/2007			3.59	
4/25/2007			9.49	
5/30/2007			3.24	

Lead

Date	Lead (Dissolved) (ug/L)	Lead (Dissolved) for DMT (ug/L)	Lead (Total) (ug/L)	Dissolved Fraction
1/7/2004	< 1	1	10.9	0.092
2/18/2004	< 1	1	11	0.091
3/30/2004	< 1	1	9.46	0.106
4/21/2004	< 1	1	13.5	0.074
5/26/2004	< 1	1	6.43	0.156
6/16/2004	< 1	1	5.96	0.168
7/19/2004	< 1	1	1.49	0.671
8/16/2004	< 1	1	3.88	0.258
9/20/2004	< 1	1	4.23	0.236
10/25/2004	< 1	1	6.04	0.166
11/29/2004	< 1	1	3.99	0.251
12/20/2004	< 1	1	15.2	0.066
1/12/2005	< 1	1	9.98	0.100
2/23/2005	< 1	1	2.37	0.422
3/22/2005	< 1	1	5.24	0.191
4/27/2005	< 1	1	7.06	0.142
5/24/2005	< 1	1	6.57	0.152
6/27/2005	< 1	1	2.76	0.362
7/27/2005	< 1	1	2.98	0.336
8/22/2005	< 1	1	2.15	0.465
9/26/2005	< 1	1	2.68	0.373
10/26/2005	< 1	1	3.07	0.326
11/28/2005	< 1	1	58.3	0.017
12/15/2005	< 1	1	3.66	0.273
1/11/2006	< 1	1	8.04	0.124
2/6/2006	< 1	1	5.33	0.188
3/15/2006	< 1	1	7.73	0.129
4/26/2006	< 1	1	15.3	0.065
5/22/2006	< 1	1	6.3	0.159
6/21/2006	< 1	1	3.14	0.318
7/10/2006	< 1	1	1.96	0.510
8/14/2006	< 1	1	3.06	0.327
9/25/2006	< 1	1	8.57	0.117
10/18/2006			4.44	
11/27/2006			4.16	
12/18/2006			3.39	
1/22/2007			3.72	
2/20/2007			4.17	
3/28/2007			5.85	
4/25/2007			16.1	
5/30/2007			5.04	

Zinc

Date	Zinc (Dissolved) (ug/L)	Zinc (Dissolved) for DMT (ug/L)	Zinc (Total) (ug/L)	Dissolved Fraction
1/7/2004	7.06	7.06	47.2	0.150
2/18/2004	7.45	7.45	45.1	0.165
3/30/2004	10.3	10.3	45	0.229
4/21/2004	12.7	12.7	57.3	0.220
5/26/2004	14.1	14.1	36.2	0.390
6/16/2004	5.81	5.81	34.7	0.167
7/19/2004	8.86	8.86	12.1	0.732
8/16/2004	4.96	4.96	22.2	0.223
9/20/2004			17.9	
10/25/2004	4.78	4.78	27.1	0.176
11/29/2004	12.6	12.6	26.6	0.474
12/20/2004	8.85	8.85	69.1	0.128
1/12/2005	18.9	18.9	55.3	0.342
2/23/2005	12.7	12.7	21.6	0.588
3/22/2005	9.15	9.15	29.5	0.310
4/27/2005	10.5	10.5	39.9	0.263
5/24/2005	8.98	8.98	33.9	0.266
6/27/2005	9.36	9.36	16.7	0.560
7/27/2005	11.2	11.2	17.9	0.626
8/22/2005	8.33	8.33	12.4	0.672
9/26/2005	8.38	8.38	15.2	0.551
10/26/2005	11.4	11.4	19.9	0.573
11/28/2005	11	11	193	0.057
12/15/2005	13	13	26.8	0.485
1/11/2006	12.9	12.9	43.5	0.297
2/6/2006	11.4	11.4	30.3	0.376
3/15/2006	15.7	15.7	45.8	0.343
4/26/2006	12.1	12.1	69.4	0.174
5/22/2006	11.1	11.1	29.2	0.380
6/21/2006	11	11	20.3	0.542
7/10/2006	8.14	8.14	14.6	0.558
8/14/2006	7.66	7.66	15.8	0.485
9/25/2006	12.4	12.4	40.4	0.307
10/18/2006			33.9	
11/27/2006			26.4	
12/18/2006			27.6	
1/22/2007			25.3	
2/20/2007			27.5	
3/28/2007			33.3	
4/25/2007			71.3	
5/30/2007			25.2	

ATTACHMENT IHC-1

Calculation of Dissolved Metals Translators from IDEM fixed station monitoring data

6/20/2007			2.52	
7/30/2007			1.91	
8/27/2007	1.92	1.92	4.3	0.447
9/24/2007	1.51	1.51	2.13	0.709
10/29/2007	1.32	1.32	3.38	0.391
11/19/2007	1.36	1.36	3.81	0.357
12/17/2007	1.25	1.25	5.58	0.224
1/9/2008	1.56	1.56	6.92	0.225
2/20/2008	1.31	1.31	3.07	0.427
3/18/2008	1.36	1.36	4.03	0.337
4/21/2008			4	
5/28/2008			2.71	
6/10/2008			2.68	
7/28/2008			1.93	
8/26/2008			2.15	
9/23/2008			4.42	
10/28/2008			3.79	
11/19/2008			6.28	
12/15/2008	1.14	1.14	5.54	0.206
1/22/2009	1.24	1.24	3.87	0.320
2/10/2009	< 1	1	5.09	0.196
3/5/2009	1.28	1.28	4.43	0.289
4/21/2009	1.49	1.49	2.61	0.571
5/18/2009	1.09	1.09	2.88	0.378
6/11/2009	1.42	1.42	3.95	0.359
7/27/2009			2.59	
8/19/2009			2.17	
9/22/2009			3.37	
10/8/2009			5.66	
11/5/2009			4.08	
12/14/2009			4.25	
1/19/2010			2.19	
2/15/2010			2.36	

6/20/2007			2.65	
7/30/2007			1.37	
8/27/2007	< 1	1	5.59	0.179
9/24/2007	< 1	1	2.21	0.452
10/29/2007	< 1	1	4.99	0.201
11/19/2007	< 1	1	5.37	0.186
12/17/2007	< 1	1	13.1	0.076
1/9/2008	< 1	1	11.3	0.088
2/20/2008	< 1	1	3.8	0.263
3/18/2008	< 1	1	6.57	0.152
4/21/2008			7.2	
5/28/2008			3.74	
6/10/2008			4.75	
7/28/2008			2	
8/26/2008			2.01	
9/23/2008			5.76	
10/28/2008			5.98	
11/19/2008			12.5	
12/15/2008	< 1	1	10.7	0.093
1/22/2009	< 1	1	6	0.167
2/10/2009	< 1	1	8.68	0.115
3/5/2009	< 1	1	5.99	0.167
4/21/2009	< 1	1	2.81	0.356
5/18/2009	< 1	1	4.81	0.208
6/11/2009	< 1	1	6.97	0.143
7/27/2009			3.03	
8/19/2009			2.25	
9/22/2009			5.23	
10/8/2009			10.6	
11/5/2009			6.66	
12/14/2009			6.4	
1/19/2010			1.77	
2/15/2010			2.33	

6/20/2007			19.8	
7/30/2007			12.1	
8/27/2007	12.7	12.7	30.9	0.411
9/24/2007	8.21	8.21	13.5	0.609
10/29/2007	10.8	10.8	24.4	0.443
11/19/2007	7.52	7.52	27.5	0.273
12/17/2007	11.1	11.1	48.9	0.227
1/9/2008	17.8	17.8	62.6	0.284
2/20/2008	15.6	15.6	31.3	0.498
3/18/2008	13	13	34.6	0.376
4/21/2008			38.8	
5/28/2008			24.1	
6/10/2008			25.5	
7/28/2008			14.6	
8/26/2008			12.4	
9/23/2008			32.4	
10/28/2008			27.3	
11/19/2008			53.4	
12/15/2008	10.1	10.1	53	0.191
1/22/2009	10.2	10.2	31.8	0.321
2/10/2009	14	14	43.5	0.322
3/5/2009	13.7	13.7	35.1	0.390
4/21/2009	15.7	15.7	26.9	0.584
5/18/2009	13.9	13.9	31.3	0.444
6/11/2009	9.5	9.5	33.1	0.287
7/27/2009			15.1	
8/19/2009			10.6	
9/22/2009			20.3	
10/8/2009			38.2	
11/5/2009			31.2	
12/14/2009			30.8	
1/19/2010			16.2	
2/15/2010			17.7	

Copper (January 2004 to June 2009)	
No. of Samples	47
Geometric mean of dissolved fractions	0.353
TSS regression DMT (TSS = 4 mg/l)	0.493
95th percentile of dissolved fractions	0.718

Lead (January 2004 to June 2009)	
No. of Samples	48
Geometric mean of dissolved fractions	0.176
TSS regression DMT (TSS = 4 mg/l)	0.269
95th percentile of dissolved fractions	0.472

Zinc (January 2004 to June 2009)	
No. of Samples	47
Geometric mean of dissolved fractions	0.332
TSS regression DMT (TSS = 4 mg/l)	0.432
95th percentile of dissolved fractions	0.835

ATTACHMENT IHC-1

Calculation of Dissolved Metals Translators from IDEM fixed station monitoring data

IHC-0 Fixed Station Monitoring Data

Copper

Date	Copper (Dissolved) (ug/L)	Copper (Dissolved) for DMT (ug/L)	Copper (Total) (ug/L)	Dissolved Fraction
1/7/2004	1.42	1.42	2.53	0.561
2/19/2004	1.25	1.25	2.08	0.601
3/30/2004	1.14	1.14	2.78	0.410
4/21/2004	< 1	1	32.7	0.031
5/26/2004	1.41	1.41	2.42	0.583
6/16/2004	1.42	1.42	2.36	0.602
7/19/2004	1.65	1.65	2.5	0.660
8/16/2004	1.42	1.42	2.53	0.561
9/21/2004	1.47	1.47	2.65	0.555
10/26/2004	1.34 (JDJ)		2.71	
11/30/2004	1.05	1.05	1.76	0.597
12/20/2004	< 1	1	5.34	0.187
1/12/2005	1.2	1.2	2.85	0.421
2/24/2005	1.32	1.32	2	0.660
3/21/2005	1.48	1.48	2.72	0.544
4/27/2005	1.3	1.3	3.11	0.418
5/24/2005	1.48	1.48	2.92	0.507
6/27/2005	1.42	1.42	2.03	0.700
7/28/2005	1.25	1.25	2.1	0.595
8/22/2005	1.32	1.32	2.12	0.623
9/26/2005	1.09	1.09	1.89	0.577
11/28/2005	1.59	1.59	2.49	0.639
12/14/2005	1.15	1.15	3.12	0.369
2/6/2006	1.36	1.36	2.75	0.495
3/15/2006	1.58	1.58	2.8	0.564
4/26/2006	1.94	1.94	2.47	0.785
5/22/2006	1.59	1.59	2.64	0.602
6/21/2006	1.48	1.48	1.9	0.779
7/10/2006	1.42	1.42	3.04	0.467
8/14/2006	1.5	1.5	2.17	0.691
9/26/2006	1.48	1.48	2.18	0.679

Lead

Date	Lead (Dissolved) (ug/L)	Lead (Dissolved) for DMT (ug/L)	Lead (Total) (ug/L)	Dissolved Fraction
1/7/2004	< 1	1	2.71	0.369
2/19/2004	< 1	1	1.72	0.581
3/30/2004	< 1	1	3.82	0.262
4/21/2004	< 1	1	83.4	0.012
5/26/2004	< 1	1	2.1	0.476
6/16/2004	< 1	1	3.17	0.315
7/19/2004	< 1	1	1.63	0.613
8/16/2004	< 1	1	1.85	0.541
9/21/2004	< 1	1	2.42	0.413
10/26/2004	< 1	1	2.79	0.358
11/30/2004	< 1	1	1.68	0.595
12/20/2004	< 1	1	9.59	0.104
1/12/2005	< 1	1	3.29	0.304
2/24/2005	< 1	1	1.71	0.585
3/21/2005	< 1	1	2.52	0.397
4/27/2005	< 1	1	3.66	0.273
5/24/2005	< 1	1	2.67	0.375
6/27/2005	< 1	1	1.76	0.568
7/28/2005	< 1	1	1.94	0.515
8/22/2005	< 1	1	1.72	0.581
9/26/2005	< 1	1	1.96	0.510
11/28/2005	< 1	1	1.58	0.633
12/14/2005	< 1	1	3.58	0.279
2/6/2006	< 1	1	2.35	0.426
3/15/2006	< 1	1	3.21	0.312
4/26/2006	< 1	1	2.26	0.442
5/22/2006	< 1	1	2.77	0.361
6/21/2006	< 1	1	1.85	0.541
7/10/2006	< 1	1	3.19	0.313
8/14/2006	< 1	1	1.43	0.699
9/26/2006	< 1	1	1.52	0.658

Zinc

Date	Zinc (Dissolved) (ug/L)	Zinc (Dissolved) for DMT (ug/L)	Zinc (Total) (ug/L)	Dissolved Fraction
1/7/2004	11.1	11.1	24.4	0.455
2/19/2004	10.6	10.6	19.4	0.546
3/30/2004	10.1	10.1	29.9	0.338
4/21/2004	7.38	7.38	414	0.018
5/26/2004	13.3	13.3	24.3	0.547
6/16/2004	24	24	45.8	0.524
7/19/2004	9.9	9.9	19.2	0.516
8/16/2004	17.5	17.5	37	0.473
9/21/2004				
10/26/2004	9.13	9.13	23.1	0.395
11/30/2004	13.8	13.8	21.3	0.648
12/20/2004	7.7	7.7	59.2	0.130
1/12/2005	10.8	10.8	32	0.338
2/24/2005	36.3	36.3	50.9	0.713
3/21/2005	12.6	12.6	25.9	0.486
4/27/2005	31.3	31.3	65.9	0.475
5/24/2005	47	47	74.5	0.631
6/27/2005	20.9	20.9	33	0.633
7/28/2005	14.8	14.8	34.5	0.604
8/22/2005	17	17	24.9	0.683
9/26/2005	17.3	17.3	26.4	0.655
11/28/2005	45.6	45.6	52.9	0.862
12/14/2005	10.9	10.9	35	0.436
2/6/2006	25.1	25.1	37.8	0.664
3/15/2006	24.4	24.4	35.2	0.693
4/26/2006	14.6	14.6	26.9	0.543
5/22/2006	14.4	14.4	27.4	0.526
6/21/2006	14.1	14.1	29.1	0.485
7/10/2006	14.4	14.4	38.2	0.377
8/14/2006	8.29	8.29	14.8	0.560
9/26/2006	43.9	43.9	53.3	0.824

Copper (January 2004 to October 2006)	
No. of Samples	30
Geometric mean of dissolved fractions	0.499
TSS regression DMT (TSS = 4 mg/l)	0.574
95th percentile of dissolved fractions	0.743

Lead (January 2004 to October 2006)	
No. of Samples	31
Geometric mean of dissolved fractions	0.374
TSS regression DMT (TSS = 4 mg/l)	0.447
95th percentile of dissolved fractions	0.645

Zinc (January 2004 to October 2006)	
No. of Samples	30
Geometric mean of dissolved fractions	0.462
TSS regression DMT (TSS = 4 mg/l)	0.544
95th percentile of dissolved fractions	0.774

ATTACHMENT IHC-1
Calculation of Dissolved Metals Translators from IDEM fixed station monitoring data

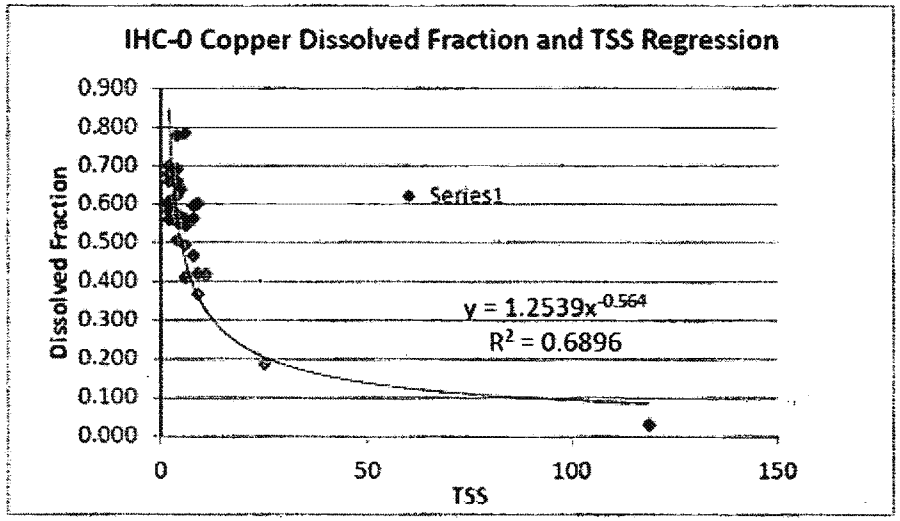

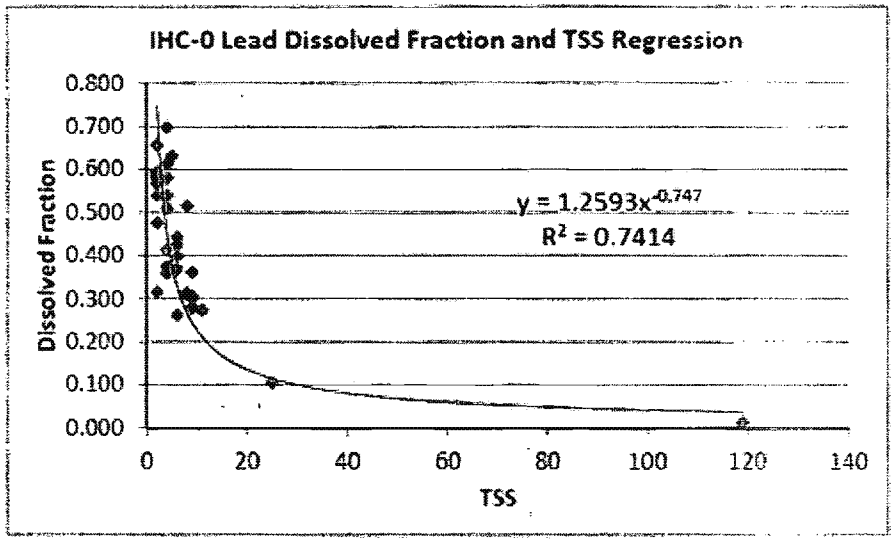

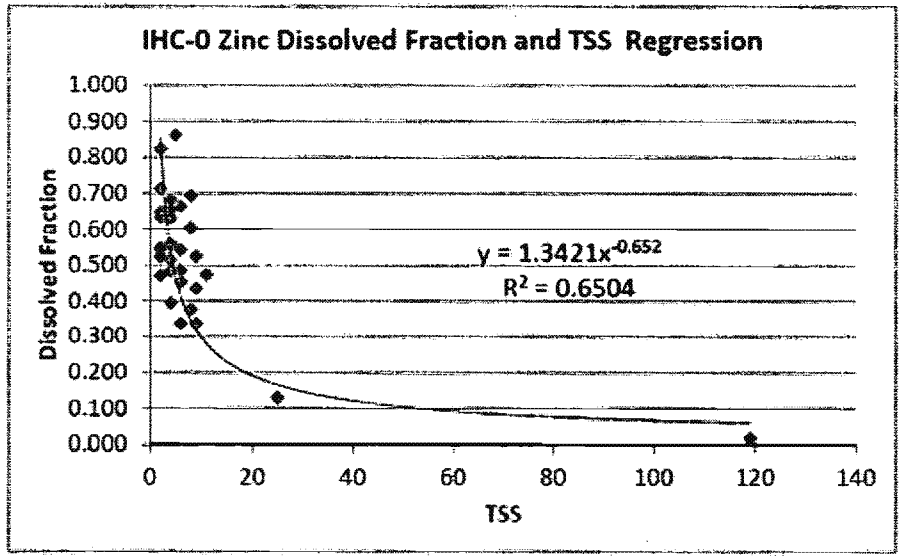

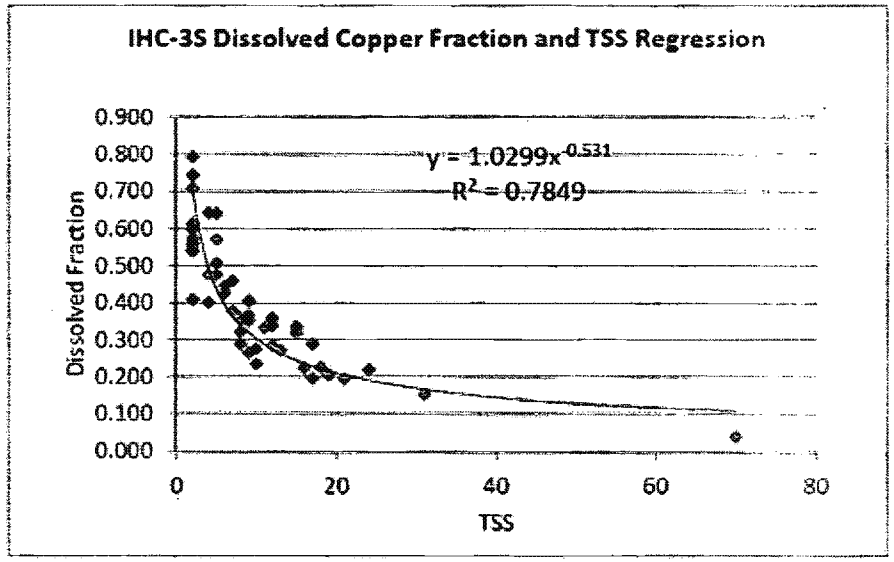

ATTACHMENT IHC-1

Calculation of Dissolved Metals Translators from IDEM fixed station monitoring data

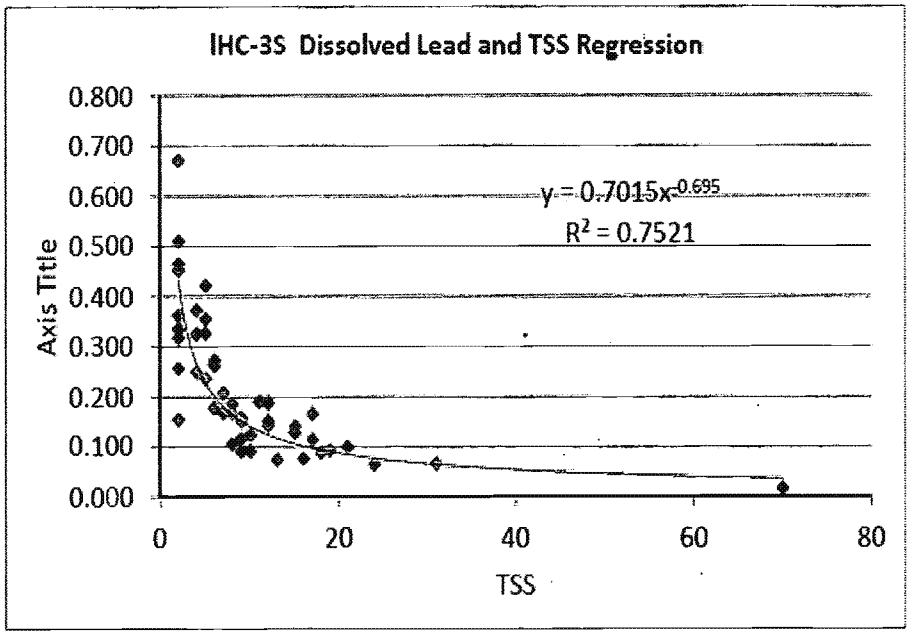

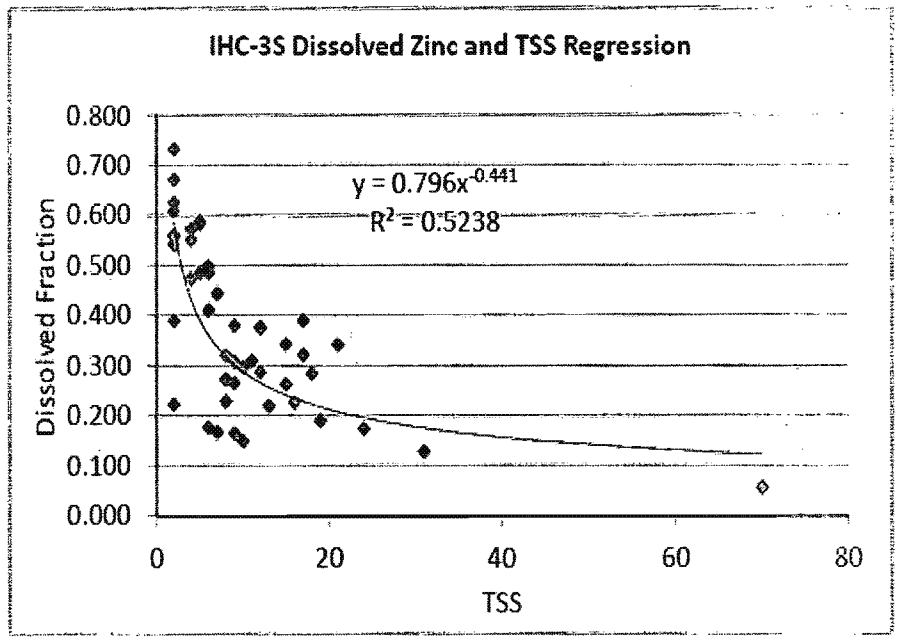

ATTACHMENT IHC-2
MODIFIED INDIANA HARBOR CANAL WASTELOAD ALLOCATION - MODIFICATIONS HIGHLIGHTED

PARAMETER: LEAD (TOTAL RECOVERABLE)

SECTION 1 - MODEL INPUTS

SEGMENT	OUTFALL	DISCHARGE FLOW (mgd)	4-DAY AVERAGE DISCHARGE CONC. (µg/L)	4-DAY AVERAGE DISCHARGE LOAD (lbs/day)	MONTHLY SAMPLING FREQUENCY	PRELIMINARY EFFLUENT LIMITATIONS			
						MONTHLY AVERAGE		DAILY MAXIMUM	
						CONC. (µg/L)	LOAD (lbs/day)	CONC. (µg/L)	LOAD (lbs/day)
27	SUC001	0.55	25	0.11	4	20	0.092	41	0.19
29	AMC001	6.5	215	11.66	4	176	9.5	360	19
30	AMLC001	3.8	14	0.42	4	11	0.30	23	0.70
31	AMW002	11.2	2.0	0.19					
33	AME007	0.0037	4.0	0.00012					
34	AMW009	55.3	13	6.00	4	11	5.1	21	9.7
34	AMW010	38.6	3.0	0.92					
37	AME011	84.7	–	1.1					
37	AME014	11.5	146	14.01	4	120	11.5	240	23
37	AME018	15.9	40	5.31	4	33	4.3	66	9.0
39	AMW011	23.4	32	6.25	4	26	5.1	53	10
124	CDF001	0.33	16	0.04	4	13	0.038	26	0.072
123	EM001	0.33	16	0.04	4	13	0.038	26	0.072
37	AMW Intake	-49	(Withdrawal)						

Lake Michigan Conc. (µg/l) = 0.57 (for lake intrusion flow) 8/18/2011

ATTACHMENT IHC-2

MODIFIED INDIANA HARBOR CANAL WASTELOAD ALLOCATION - MODIFICATIONS HIGHLIGHTED

PARAMETER: LEAD (TOTAL RECOVERABLE)

SECTION 2 - MODEL OUTPUT

SURFACE SEGMENT	DISCHARGE FLOW TO THE SEGMENT (mgd)	DISCHARGE LOAD TO THE SEGMENT (lbs/day)	25% FLOW OF PRECEDING SEGMENT (mgd)	25% LOAD OF PRECEDING SEGMENT (lbs/day)	TOTAL MIXING ZONE FLOW IN THE SEGMENT (mgd)	TOTAL MIXING ZONE LOAD IN THE SEGMENT (lbs/day)	STREAM CONCENTRATION AT EDGE OF MIXING ZONE[1] (µg/L)	FLOW OUT OF SEGMENT (mgd)	LOAD OUT OF SEGMENT (lbs/day)	CONC. OUT OF SEGMENT[1] (µg/L)
20/133								227.54	9.68	5.1
21	0	0	56.89	2.42	56.89	2.42	**5.1**	227.54	9.68	5.1
22	0	0	56.89	2.42	56.89	2.42	**5.1**	227.54	9.68	5.1
23	0	0	56.89	2.42	56.89	2.42	**5.1**	227.54	9.68	5.1
24	0	0	56.89	2.42	56.89	2.42	**5.1**	227.54	9.68	5.1
25	0	0	56.89	2.42	56.89	2.42	**5.1**	227.54	9.68	5.1
26	0	0	56.89	2.42	56.89	2.42	**5.1**	227.54	9.68	5.1
27	0.55	0.11	56.89	2.42	57.44	2.54	**5.3**	228.09	9.80	5.1
28	0	0	57.02	2.45	57.02	2.45	**5.1**	228.09	9.80	5.1
LGC	0.66	0.09	–	–	–	–	–	228.75	9.89	5.2
29	6.5	11.7	57.19	2.47	63.69	14.13	**26.6**	235.25	21.55	11.0
30	3.6	0.42	58.81	5.39	62.41	5.81	**11.2**	238.85	21.97	11.0
31	11.2	0.19	59.71	5.49	70.91	5.68	**9.6**	250.05	8.35	4.0
32	0	0	62.51	2.09	62.51	2.09	**4.0**	250.05	8.35	4.0
33	9.05	0.04	62.51	2.09	71.57	2.13	**3.6**	259.10	8.39	3.9
34	101.60	6.96	64.78	2.10	166.37	9.06	**6.5**	360.70	15.35	5.1
35	9.70	0.05	90.17	3.84	99.87	3.88	**4.7**	370.40	15.40	5.0
36	9.70	0.05	92.60	3.85	102.30	3.90	**4.6**	380.09	15.44	4.9
Intake	-49	-1.99	–	–	–	–	–	331.09	13.45	4.9
37	121.50	20.46	82.77	3.38	204.57	23.83	**14.0**	452.89	33.92	9.0
38	33.74	6.30	113.22	8.48	146.96	14.78	**12.0**	486.63	40.22	9.9
39	-10.34	0.05	121.66	10.05	132.00	10.10	**9.2**	496.97	40.26	9.7
40	10.34	0.05	124.24	10.07	134.59	10.12	**9.0**	507.32	40.31	9.5
41	10.34	0.05	126.83	10.08	137.17	10.13	**8.8**	517.66	40.36	9.3

[1]Segments 21-26: Lead $C_{instream}$ (CCC/DMT) = 16 µg/L (Hardness = 208 mg/L and DMT = 0.684)

Segments 27-31: Lead $C_{instream}$ (CCC/DMT) = 26.6 µg/L (Hardness = 206 mg/L and DMT = 0.415)

Segments 32-41: Lead $C_{instream}$ (CCC/DMT) = 25.3 µg/L (Hardness = 178 mg/L and DMT = 0.374)

Lake Michigan (Out of Segment 41): Lead $C_{instream}$ (CCC/DMT) = 9.9 µg/L (Hardness = 140 mg/L and DMT = 0.742)

8/18/2011

ATTACHMENT IHC-2
MODIFIED INDIANA HARBOR CANAL WASTELOAD ALLOCATION - MODIFICATIONS HIGHLIGHTED

PARAMETER: LEAD (TOTAL RECOVERABLE)

SECTION 3 - RATIONALE FOR MODEL INPUTS	
OUTFALL	**RATIONALE FOR WASTELOAD ALLOCATION**
BUC001	The 4-day average WLA for this outfall was set equal to 25 ug/l in the March 19, 2009 WLA (WLA001600). Only one discharge event has occured at this facility (March 11, 2010) and the lead concentration was 0.4 ug/l which is less than the estimated daily maximum PEQ of 38 ug/l in the 2009 WLA. Therefore, it was set equal to the value used in the 2009 WLA. The sampling frequency was set equal to the default of 1/week.
AMC001	Set equal to value that equates to limits based on site-specific DMT
AMLC001	Set equal to value that results in limits which are greater than PEQs calculated under 327 IAC 5-2-11.5(b)(1)(B)(V) and greater than the concentrations equivalent to Outfall 602 TBELs.
AMW002	1999 TMDL data less than background concentration calculated at IDEM fixed station IHC-3S and comparable to background concentration at IHC-0 which is the fixed station most representative of the intake source. This outfall consists of noncontact cooling water, stormwater and groundwater. Preliminary effluent limitations not developed based on source and nature of discharge (intake from Indiana Harbor Canal and Lake Michigan; primarily noncontact cooling water; effluent concentration small compared to the criterion; and, no internal outfalls), downstream fixed station IHC-2 showing instream concentration less than upstream concentration at fixed station IHC-3S and the available dilution. Set equal to effluent concentration which is the same as the background concentration at fixed station IHC-0.
AME007	Only stormwater data available. Preliminary effluent limitations not developed based on source and nature of the discharge. Set equal to background concentration calculated at IDEM fixed station IHC-2.
AMW009	1999 TMDL data less than background concentration calculated at IDEM fixed station IHC-2 which is upstream of the outfall and less than background concentration at IHC-0 which is the fixed station most representative of the intake source. This outfall currently consists of noncontact cooling water, stormwater and groundwater. It is proposed to add internal Outfall 509 which will have TBELs for lead of monthly average 2.98 lbs/day and daily maximum 8.95 lbs/day and an effluent flow of 1.1 mgd. Estimated monthly average (8.4 ug/l) and daily maximum (21 ug/l) PEQs were developed based on the sum of the TBELs at internal Outfall 509 and the mass calculated using a current effluent concentration of 2 ug/l (background concentration at fixed station IHC-0) and flow of 54.2 mgd. Set so that monthly and daily PEQs do not exceed PELs. The sampling frequency was set equal to the default of 1/week.
AMW010	1999 TMDL data less than background concentration calculated at IDEM fixed station IHC-2 which is upstream of the outfall and less than background concentration at IHC-0 which is the fixed station most representative of the intake source. This outfall consists of noncontact cooling water, stormwater and groundwater. Preliminary effluent limitations not developed based on source and nature of discharge (intake from Indiana Harbor Canal and Lake Michigan; primarily noncontact cooling water; effluent concentration small compared to the criterion; and, no internal outfalls), downstream fixed station IHC-0 showing instream concentration less than upstream concentration at fixed station IHC-2 and the available dilution. Set based on the effluent concentration which is the same as the background concentration at fixed station IHC-0. Also, set so that the combined mass for Outfalls 009 and 010 does not exceed the PELs in the PEL spreadsheet for the combined outfalls.
AME011	MMR data comparable to Lake Michigan data collected at IDEM fixed station LM-EC Lake Michigan at East Chicago Waterworks which is located in the vicinity of the ArcelorMittal Indiana Harbor East intakes. This outfall consists of noncontact cooling water, boiler blowdown, zeolite rinse water and stormwater. Preliminary effluent limitations not developed based on source and nature of discharge (intake from Lake Michigan; primarily noncontact cooling water; effluent concentration small compared to criterion; and, no internal outfalls) and the available dilution. Set equal to the geometric mean of effluent loading data due to the availability of a large, representative effluent data set.
AME014	Set equal to value that equates to existing Outfall 014 monthly average limit and that reserves some capacity at Lake Michigan. Resulting daily max PEL is more stringent than existing daily max limit and preliminary daily max WQBEL calculated using TSS regression or geometric mean DMTs.
AME018	Set equal to value that results in PELs greater than the sum of the 518 and 618 TBELs.
AMW011	The monthly PEQ is 14 ug/l and the daily PEQ is 29 ug/l. This outfall currently has TBELs for lead, but it is proposed to move part of the source of lead and part of the TBELs to internal Outfall 509. It is also proposed to create internal Outfalls 701 and 702 that will have TBELs for lead and discharge through Outfall 011. The proposed internal Outfall 701 monthly average/daily maximum TBELs are 0.25/0.78 lbs/day. The proposed internal Outfall 702 monthly average/daily maximum TBELs are 0.72/2.17 lbs/day. Set to meet the PELs in the PEL spreadsheet. This value allows the PEQs and the proposed TBELs to be met. The sampling frequency was set equal to the default of 1/week.
CDF001	No effluent data available. Set equal to the chronic criterion based on potential future discharge. The sampling frequency was set equal to 1/week based on potential future permit limit.
EM001	Limited effluent data available from 1997 and 1998. Data from 1997 provided in April 1, 1998 WLA Report (WLA000307). Set equal to the chronic criterion based on the available data. The sampling frequency was set equal to 1/week based on potential future permit limit.
	8/18/2011

ATTACHMENT IHC-2
MODIFIED INDIANA HARBOR CANAL WASTELOAD ALLOCATION - MODIFICATIONS HIGHLIGHTED

PARAMETER: ZINC (TOTAL RECOVERABLE)

SECTION 1 - MODEL INPUTS

SEGMENT	OUTFALL	DISCHARGE FLOW (mgd)	4-DAY AVERAGE DISCHARGE CONC. (µg/L)	4-DAY AVERAGE DISCHARGE LOAD (lbs/day)	MONTHLY SAMPLING FREQUENCY	PRELIMINARY EFFLUENT LIMITATIONS			
						MONTHLY AVERAGE		DAILY MAXIMUM	
						CONC. (µg/L)	LOAD (lbs/day)	CONC. (µg/L)	LOAD (lbs/day)
27	BUC001	0.55	29	0.13					
29	AMC001	6.5	440	23.87	4	360	20	720	39
30	AMLC001	3.6	46	1.38	4	39	1.1	80	2.4
31	AMW002	11.2	27	2.52					
33	AME007	0.0037	25	0.00077					
34	AMW009	56.3	45	20.77	4	37	17	74	34
34	AMW010	38.6	27	8.25					
37	AME011	84.7	–	7.2					
37	AME014	11.5	295	28.31	4	240	23	480	46
37	AME018	15.9	217	28.79	4	180	24	360	48
38	AMW011	23.4	214	41.79	4	180	35	350	68
124	CDF001	0.33	134	0.37	4	110	0.30	220	0.61
123	EMD01	0.33	134	0.37	4	110	0.30	220	0.61
37	AMW Intake	-49	(Withdrawal)						
Lake Michigan Conc. (µg/l) =		3.5	(for lake intrusion flow)						8/18/2011

ATTACHMENT IHC-2

MODIFIED INDIANA HARBOR CANAL WASTELOAD ALLOCATION - MODIFICATIONS HIGHLIGHTED

PARAMETER: ZINC (TOTAL RECOVERABLE)

SECTION 2 - MODEL OUTPUT

SURFACE SEGMENT	DISCHARGE FLOW TO THE SEGMENT (mgd)	DISCHARGE LOAD TO THE SEGMENT (lbs/day)	25% FLOW OF PRECEDING SEGMENT (mgd)	25% LOAD OF PRECEDING SEGMENT (lbs/day)	TOTAL MIXING ZONE FLOW IN THE SEGMENT (mgd)	TOTAL MIXING ZONE LOAD IN THE SEGMENT (lbs/day)	STREAM CONCENTRATION AT EDGE OF MIXING ZONE[1] (µg/L)	FLOW OUT OF SEGMENT (mgd)	LOAD OUT OF SEGMENT (lbs/day)	CONC. OUT OF SEGMENT[1] (µg/L)
20/133								227.54	55.07	29
21	0	0	56.89	13.77	56.89	13.77	29	227.54	55.07	29
22	0	0	56.89	13.77	56.89	13.77	29	227.54	55.07	29
23	0	0	56.89	13.77	56.89	13.77	29	227.54	55.07	29
24	0	0	56.89	13.77	56.89	13.77	29	227.54	55.07	29
25	0	0	56.89	13.77	56.89	13.77	29	227.54	55.07	29
26	0	0	56.89	13.77	56.89	13.77	29	227.54	55.07	29
27	0.55	0.13	56.89	13.77	57.44	13.90	29	228.09	55.20	29
28	0	0	57.02	13.80	57.02	13.80	29	228.09	55.20	29
LGC	0.66	0.74	–	–	–	–	–	228.75	55.94	29
29	6.5	23.9	57.19	13.98	63.69	37.85	71	235.25	79.80	41
30	3.6	1.38	58.81	19.85	62.41	21.33	41	238.85	81.19	41
31	11.2	2.52	59.71	20.30	70.91	22.82	39	250.05	52.17	25
32	0	0	62.51	13.04	62.51	13.04	25	250.05	52.17	25
33	9.05	0.27	62.51	13.04	71.57	13.31	22	259.10	52.43	24
34	101.60	29.30	64.78	13.11	166.37	42.40	31	360.70	81.73	27
35	9.70	0.28	90.17	20.43	99.87	20.72	25	370.40	82.01	27
36	9.70	0.28	92.60	20.50	102.30	20.79	24	380.09	82.29	26
Intake	-49	-10.61	–	–	–	–	–	331.09	71.69	26
37	121.80	84.59	82.77	17.92	204.57	82.51	48	452.89	138.27	36
38	33.74	42.09	113.22	34.07	146.96	76.16	62	486.63	178.36	44
39	10.34	0.30	121.68	44.59	132.00	44.89	41	496.97	178.66	43
40	10.34	0.30	124.24	44.67	134.59	44.97	40	507.32	178.97	42
41	10.34	0.30	126.83	44.74	137.17	45.04	39	517.66	179.27	41

[1]Segments 21-26: Zinc $C_{instream}$ (CCC/DMT) = 220 µg/L (Hardness = 208 mg/L and DMT = 0.986)

Segments 27-31: Zinc $C_{instream}$ (CCC/DMT) = 582 µg/L (Hardness = 206 mg/L and DMT = 0.375)

Segments 32-41: Zinc $C_{instream}$ (CCC/DMT) = 417 µg/L (Hardness = 178 mg/L and DMT = 0.462)

Lake Michigan (Out of Segment 41): Zinc $C_{instream}$ (CCC/DMT) = 160 µg/L (Hardness = 140 mg/L and DMT = 0.986)

8/18/2011

ATTACHMENT IHC-2

MODIFIED INDIANA HARBOR CANAL WASTELOAD ALLOCATION - MODIFICATIONS HIGHLIGHTED

PARAMETER: ZINC (TOTAL RECOVERABLE)

SECTION 3 - RATIONALE FOR MODEL INPUTS	
OUTFALL	**RATIONALE FOR WASTELOAD ALLOCATION**
BUC001	No effluent data available. Set equal to the background concentration calculated at fixed station IHC-3S based on industrial user (to East Chicago WWTP) data submitted with January 2008 permit application. Preliminary effluent limitations not developed based on source and nature of the discharge.
AMC001	WLA value equates to limits calculated with site-specific DMT
AMLC001	Set equal to value that results in limits which are greater than PEQs calculated under 327 IAC 5-2-11.5(b)(1)(B)(V) and greater than the concentrations equivalent to Outfall 602 TBELs.
AMW002	1999 TMDL data less than background concentration calculated at IDEM fixed station IHC-3S and less than background concentration at IHC-0 which is the fixed station most representative of the intake source. This outfall consists of noncontact cooling water, stormwater and groundwater. Preliminary effluent limitations not developed based on source and nature of discharge (intake from Indiana Harbor Canal and Lake Michigan; primarily noncontact cooling water; effluent concentration small compared to criterion; and, no internal outfalls), downstream fixed station IHC-2 showing instream concentration less than upstream concentration at fixed station IHC-3S and the available dilution. Set equal to background concentration at fixed station IHC-0.
AME007	Only stormwater data available. Set equal to background concentration calculated at IDEM fixed station IHC-2. Preliminary effluent limitations not developed based on source and nature of the discharge.
AMW009	1999 TMDL data less than background concentration calculated at IDEM fixed station IHC-2 which is upstream of the outfall and less than background concentration at IHC-0 which is the fixed station most representative of the intake source. This outfall currently consists of noncontact cooling water, stormwater and groundwater. It is proposed to add internal Outfall 509 which will have TBELs for zinc of monthly average 4.46 lbs/day and daily maximum 13.41 lbs/day and an effluent flow of 1.1 mgd. Estimated monthly average (38 ug/l) and daily maximum (58 ug/l) PEQs were developed based on the sum of the TBELs at internal Outfall 509 and the mass calculated using a current effluent concentration of 27 ug/l (estimated based on available effluent data and intake source data) and flow of 54.2 mgd. Set so that monthly and daily PEQs do not exceed PELs. The sampling frequency was set equal to the default of 1/week.
AMW010	1999 TMDL data less than background concentration calculated at IDEM fixed station IHC-2 which is upstream of the outfall and less than background concentration at IHC-0 which is the fixed station most representative of the intake source. This outfall consists of noncontact cooling water, stormwater and groundwater. Preliminary effluent limitations not developed based on source and nature of discharge (intake from Indiana Harbor Canal and Lake Michigan; effluent concentration small compared to the criterion; and, no internal outfalls), and the available dilution. Set based on available effluent data and intake source data. Also, set so that the combined mass for Outfalls 009 and 010 does not exceed the PELs in the PEL spreadsheet for the combined outfalls.
AME011	MMR data elevated above Lake Michigan data collected at IDEM fixed station LM-EC Lake Michigan at East Chicago Waterworks which is located in the vicinity of the ArcelorMittal Indiana Harbor East intakes. However, it is less than upstream data collected at IDEM fixed station IHC-2. This outfall consists of noncontact cooling water, boiler blowdown, zeolite rinse water and stormwater. Preliminary effluent limitations not developed based on source and nature of discharge (intake from Lake Michigan; primarily noncontact cooling water; effluent concentration less than background concentration; effluent concentration small compared to criterion; and, no internal outfalls) and the available dilution. Set equal to the geometric mean of effluent loading data due to the availability of a large, representative effluent data set.
AME014	WLA value equates to limits calculated with site-specific DMT
AME018	The monthly PEQ is 260 ug/l and the daily PEQ is 1700 ug/l. The internal Outfall 518 current monthly average/daily maximum TBELs are 2.73/8.21 lbs/day and the new calculated TBELs are 3.25/9.79 lbs/day. The internal Outfall 618 current monthly average/daily maximum TBELs are 3.50/10.50 lbs/day and the new calculated TBELs are 5.55/16.63 lbs/day. Set to meet the PELs in the PEL spreadsheet to allow the maximum possible limits due to the high PEQs and internal mass limits. This value does not allow the PEQs to be met, but it does allow the current TBELs to be met. The sampling frequency was set equal to the default of 1/week.
AMW011	The monthly PEQ is 260 ug/l and the daily PEQ is 590 ug/l. This outfall currently has TBELs for zinc, but it is proposed to move part of the source of zinc and part of the TBELs to internal Outfall 509. It is also proposed to create internal Outfalls 701 and 702 that will have TBELs for zinc and discharge through Outfall 011. The proposed internal Outfall 701 monthly average/daily maximum TBELs are 0.38/1.15 lbs/day. The proposed internal Outfall 702 monthly average/daily maximum TBELs are 1.03/3.28 lbs/day. Set to meet the PELs in the PEL spreadsheet to allow the maximum possible limits due to the high PEQs. This value does not allow the PEQs to be met, but it does allow the proposed TBELs to be met. The sampling frequency was set equal to the default of 1/week.
CDF001	No effluent data available. Set based on the PELs in the PEL spreadsheet due to potential future discharge. The PELs in the PEL spreadsheet are based on the acute (1-hour average) WLA. The 4-day average WLA was set equal to the concentration that would allow the PELs in the PEL spreadsheet to be met. The sampling frequency was set equal to 1/week based on potential future permit limit.
EM001	Historical monitoring data are available and indicate the presence of zinc. Set based on the PELs in the PEL spreadsheet due to available monitoring data. The PELs in the PEL spreadsheet are based on the acute (1-hour average) WLA. The 4-day average WLA was set equal to the concentration that would allow the PELs in the PEL spreadsheet to be met. The sampling frequency was set equal to 1/week based on potential future permit limit.

6/13/2011

Indiana Harbor and Indiana Harbor Ship Canal
1997, 1998 In-stream Temperature Monitoring Studies
(Data Previously Submitted to IDEM by Inland Steel and Ispat-Inland)

Introduction

The Indiana Department of Environmental Management (IDEM) has requested that ArcelorMittal provide information regarding thermal discharges from the Indiana Harbor West facility. We understand the purpose of the data request is to assess compliance with Indiana water quality standards for temperature in the Indiana Harbor Ship Canal and Indiana Harbor. The current NPDES permit for Indiana Harbor West does not contain monitoring requirements that would generate the necessary data to calculate historic thermal discharge loadings. Intake and effluent temperature monitoring under current relatively low production rates at Indiana Harbor West would not yield useful data in that regard.

To address the question of compliance with Indiana water quality standards for temperature in the Indiana Harbor Ship Canal and Indiana Harbor, ArcelorMittal requests that IDEM evaluate ambient temperature monitoring data collected by Inland Steel during 1997 and Ispat-Inland in 1998. These studies were conducted pursuant to Inland Steel's (now Indiana Harbor East) NPDES permit. The scope of the studies included ambient temperature measurements at key locations in the Indiana Harbor Ship Canal and Indiana Harbor from April to November of each year. Measurements were made approximately once per week during the summer months and less frequent in the spring and fall. Instream temperature measurements were made near the water surface, at mid-depth and near the bottom of the Canal and Harbor. The study results show compliance with applicable Indiana water quality standards during a period of relatively high production and relatively high thermal loads.

At the time these studies were conducted both LTV Steel (Indiana Harbor West) and Inland and Ispat-Inland (Indiana Harbor East) were operating at reasonably high production rates as measured by raw steel production. Ambient air temperatures were within normal ranges and there have been no significant changes in the flow regimes in the Indiana Harbor Ship Canal between then and now. Consequently, the results of those studies can be used to assess compliance with applicable Indiana water quality standards for temperature under current discharge and production conditions and under prospective future high production conditions.

Results of 1997 and 1998 Temperature Monitoring Studies

In 1997 and 1998, in-stream temperature was measured from April through November of each year at two locations in the Indiana Harbor Ship Canal and at one location in Indiana Harbor. Temperature in the Indiana Harbor Ship Canal was measured in the center of the canal at the now Indiana Harbor Long Carbon Outfall 001, and at the center of the canal between now Indiana Harbor East Outfalls 008 and 011. Temperature in Indiana Harbor was measured in the center of the Harbor, between now Indiana Harbor East Outfalls 011, 014, and 018. At each location, temperature was measured one-foot below the water surface, at mid-depth, and one-foot above the bottom. This temperature measuring protocol is consistent with ambient temperature monitoring protocols established at 327 IAC 2-1.5-8(6)(c)(4)(D)(i).

The final two monitoring events conducted on October 26 and November 24, 1998 included temperature measurements at additional locations across the Canal at Outfall 001 and between Outfalls 008 and 011. At each location, temperatures were monitored near the east bank and the west bank in addition to the center of the canal. Aerial maps of all monitoring locations are included as Exhibit A.

Exhibit B presents the in-stream temperature monitoring data. For each monitoring event, the maximum recorded temperature was compared to the Indiana maximum water quality standards for Indiana streams within the Great Lakes basin (327 IAC 2-1.5-8(6)(c)(4)(C)). Both the Indiana Harbor Ship Canal and Indiana Harbor are streams within the Great Lakes basin and are not within the open waters of Lake Michigan (327 IAC 2-15-2(64)).

The in-stream temperature monitoring data show maximum temperature water quality standards were met at all locations monitored in 1997 and 1998. The results are shown graphically in Figures 1 and 2.

Historical Ambient Air Temperature Data Analysis

Monthly average ambient air temperatures for 1997 and 1998 were compared to historic monthly average ambient air temperatures from 1970 to 2009 to determine whether air temperatures observed in 1997 and 1998 were typical of air temperatures historically measured and thus consistent with typical conditions. A summary of the summer monthly average data is presented below (all temperatures in Deg. F):

	July	August	September
1997	74.2	71.8	70.3
1998	74.3	74.5	73.2
1970-2009 Avg.	72.4	72.7	70.3
1970-2009 Max.	77.1	76.9	74.1

These data show ambient air temperatures in 1997 and 1998 were typical of historic conditions and suggest in-stream temperatures for 1997 and 1998 are representative of thermal discharges at the time and typical summer air temperatures. Monthly average data for January through December are included as Exhibit C and are shown graphically in Figure 3.

1997 and 1998 Steel Production at LTV Steel and Inland Steel, Ispat-Inland

Presented below is comparison of raw steel production for 1997 and 1998 and current steelmaking capacity (2010 joint capacity of Indiana Harbor East and West). Raw steel production is a good indicator of overall mill activity and thermal discharges. The 1997 and 1998, raw steel production was calculated as the sum of annual raw steel tonnages from the two basic oxygen furnace) BOF shops and the one electric arc furnace (EAF) shop at Inland Steel and Ispat-Inland, and the single BOF shop at LTV Steel.

1997 Production	9,816,000 tons 98.2 % of 2010 Nominal Capacity
1998 Production	9,282,000 tons 92.8 % of 2010 Nominal Capacity
2010 Nominal Capacity	10,000,000 tons (estimated)

Raw steel production during each year was in the immediate range of the current nominal steel capacity at Indiana Harbor. Furthermore, the following thermal load sources that were operating at Inland Steel or Ispat-Inland in 1997 and 1998 are no longer operating:

- No. 4 AC Power Station (Outfall 018)
- No. 2A Blooming Mill/21" Bar Mill (Outfall 014)
- Plant 1 Galvanizing Line (Outfall 014)

Thus, today's thermal loading at comparable steel production rates are expected to be less than observed in 1997 and 1998. Consequently, thermal discharges and impacts on ambient water temperatures in the Indiana Harbor Ship Canal and Indiana Harbor at future high production rates are expected to be less than those observed in 1997 and 1998.

EXHIBIT A (page 1 of 4)

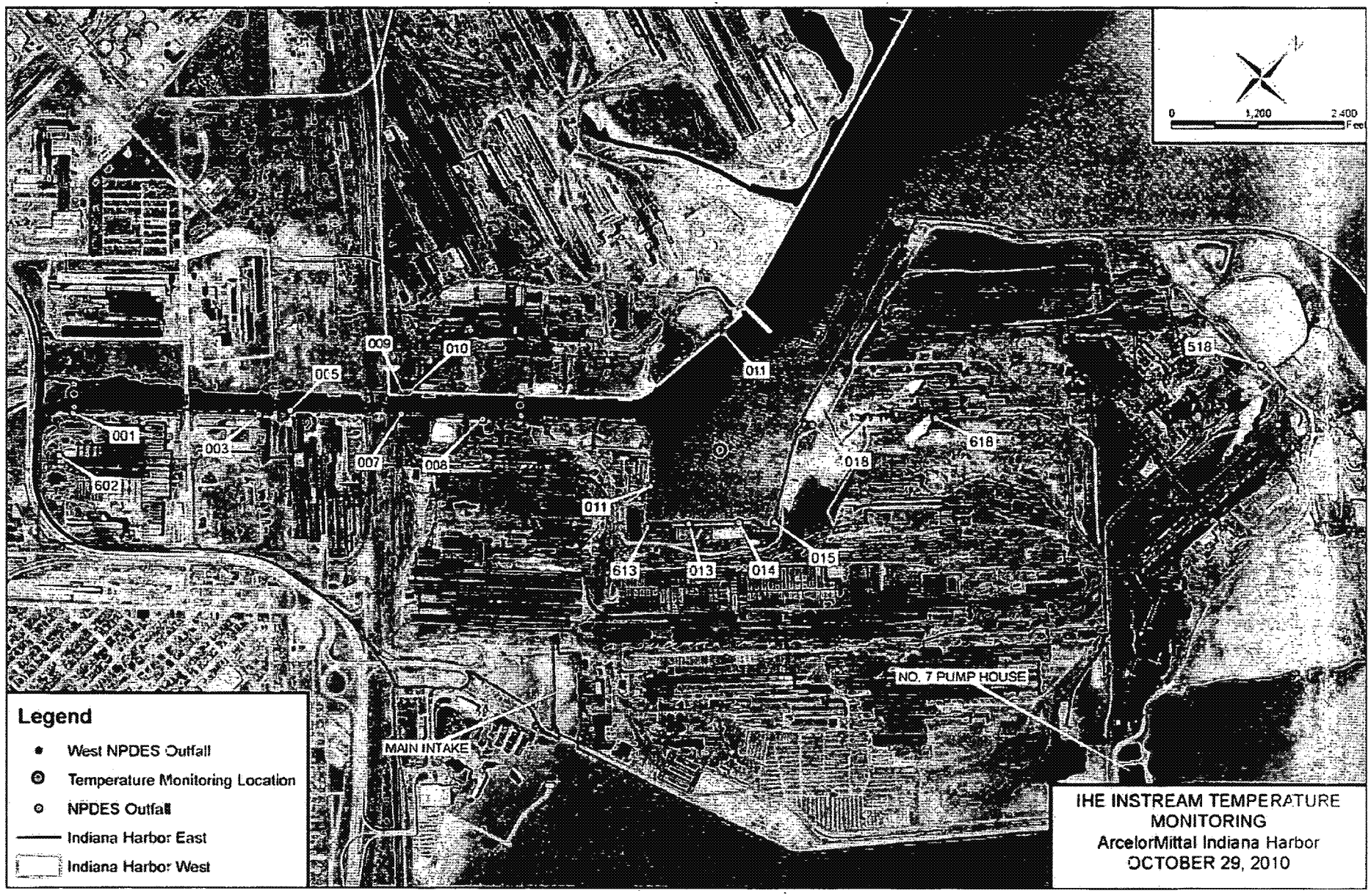

EXHIBIT A (page 2 of 4)

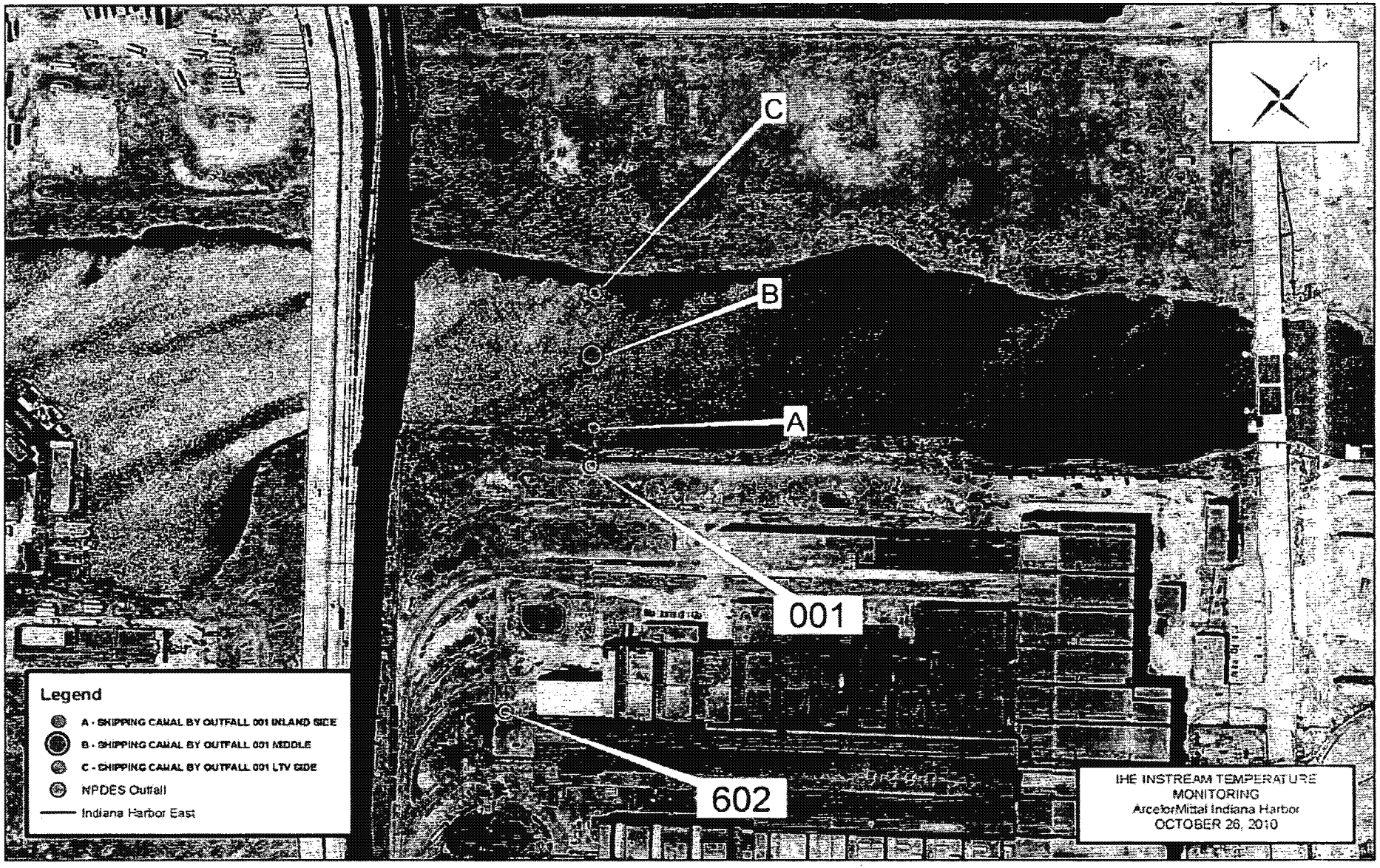

EXHIBIT A (page 3 of 4)

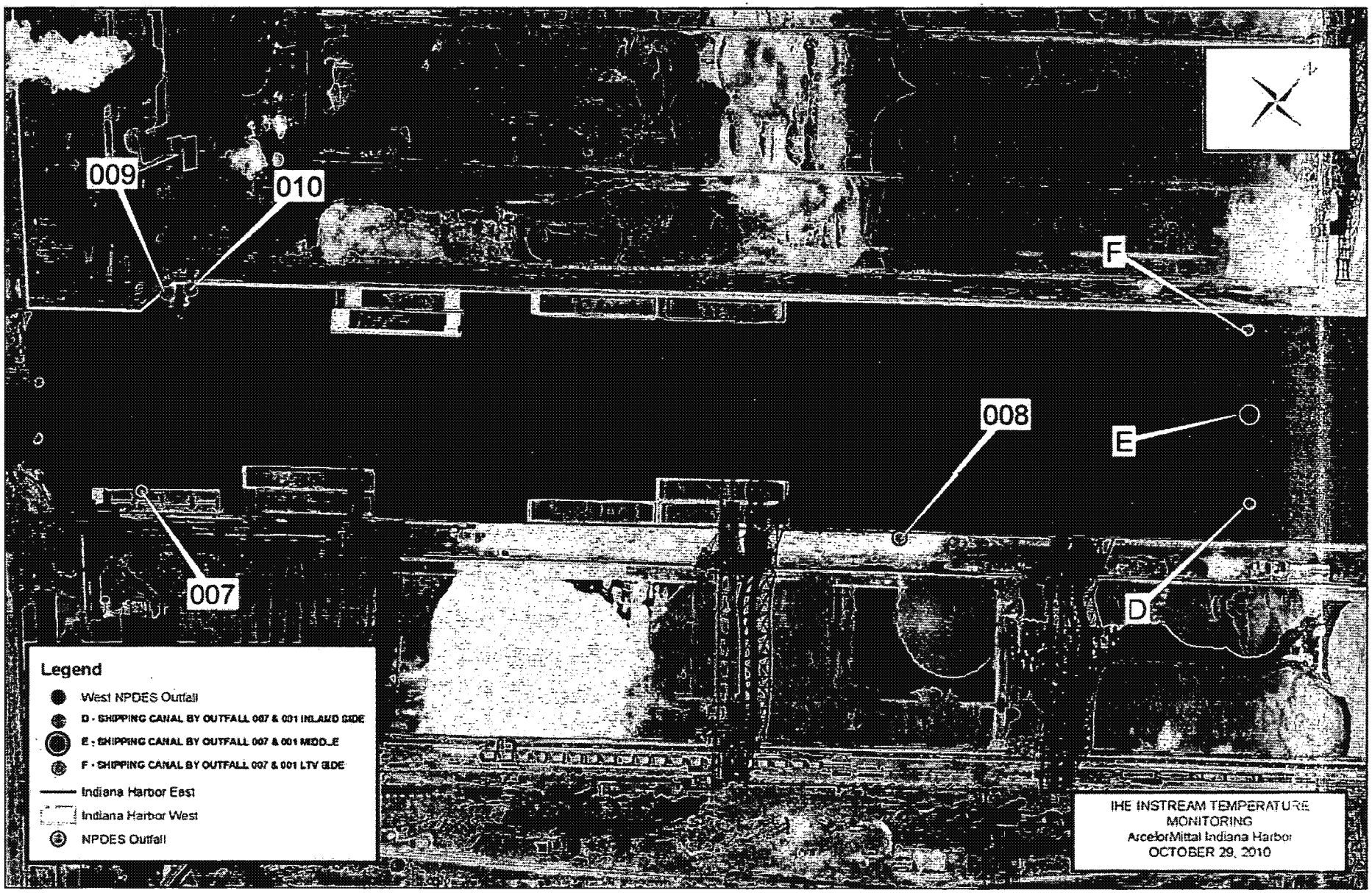

EXHIBIT A (page 4 of 4)

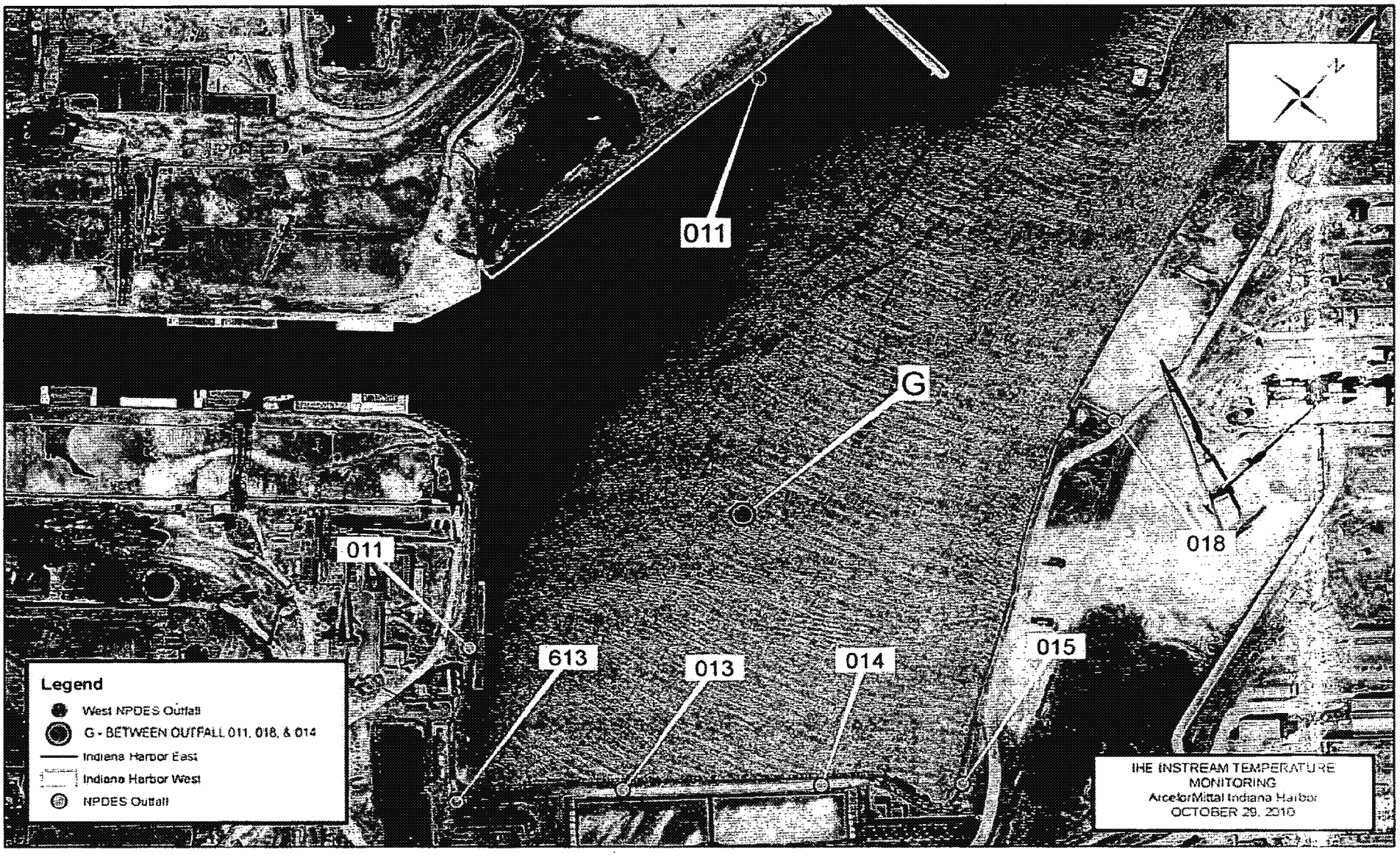

EXHIBIT B

Instream Temperature Monitoring Study

Indiana Harbor and Indiana Harbor Ship Canal

Data Collected in 1997 and 1998 (all temperatures in deg F)

11/15/2010

Date	ONE FOOT BELOW SURFACE			MID-DEPTH			ONE FOOT FROM BOTTOM			MAXIMUM	Indiana Water Quality Standard
	Ship Canal near Outfall 001	Between Outfalls 007 & 011	Between Outfalls 011, 018 & 014	Ship Canal near Outfall 001	Between Outfalls 007 & 011	Between Outfalls 011, 018 & 014	Ship Canal near Outfall 001	Between Outfalls 007 & 011	Between Outfalls 011, 018 & 014	of Recorded Temperatures	(Lake Michigan)
04/29/97 (center)	64	55	57	63	53	51	63	52	50	64	70
05/21/97 (center)	67	67	65	66	63	63	65	65	55	67	90
06/04/97 (center)	71	67	68	70	61	66	64	55	58	71	90
06/11/97 (center)	73	71	70	72	60	58	72	59	58	73	90
06/16/97 (center)	74	71	70	73	67	64	73	62	62	74	90
06/27/97 (center)	79	75	75	78	65	63	77	63	62	79	90
07/03/97 (center)	77	70	70	75	61	64	73	59	60	77	90
07/07/97 (center)	76	75	74	74	69	62	70	62	62	76	90
07/16/97 (center)	82	77	75	80	70	68	73	66	66	82	90
07/24/97 (center)	82	82	81	81	74	72	80	70	70	82	90
08/01/97 (center)	84	80	81	83	76	75	82	73	73	84	90
08/04/97 (center)	84	82	82	82	80	78	81	72	72	84	90
08/14/97 (center)	80	79	77	80	76	74	80	73	72	80	90
08/21/97 (center)	79	78	77	79	76	78	78	72	72	79	90
08/26/97 (center)	81	77	79	80	75	77	80	70	71	81	90
09/03/97 (center)	78	80	78	78	78	77	77	73	73	80	90
09/13/97 (center)	78	76	75	78	71	71	77	69	69	78	90
09/18/97 (center)	79	76	76	79	72	74	79	71	70	79	90
09/25/97 (center)	76	73	74	75	73	73	75	68	68	76	90
10/01/97 (center)	72	74	74	72	71	70	72	67	66	74	78
10/23/97 (center)	63	63	62	63	59	60	63	58	57	63	78
11/25/97 (center)	58	53	50	58	50	46	57	44	43	58	70

EXHIBIT B

Instream Temperature Monitoring Study

11/16/2010

Indiana Harbor and Indiana Harbor Ship Canal

Data Collected in 1997 and 1998 (all temperatures in deg F)

Date		ONE FOOT BELOW SURFACE			MID-DEPTH			ONE FOOT FROM BOTTOM			MAXIMUM	Indiana Water Quality Standard
		Ship Canal near Outfall 001	Between Outfalls 007 & 011	Between Outfalls 011, 018 & 014	Ship Canal near Outfall 001	Between Outfalls 007 & 011	Between Outfalls 011, 018 & 014	Ship Canal near Outfall 001	Between Outfalls 007 & 011	Between Outfalls 011, 018 & 014	of Recorded Temperatures	(Lake Michigan)
04/24/98	(center)	65	51	60	61	58	56	61	55	52	65	70
05/14/98	(center)	73	66	67	71	60	61	70	55	55	73	90
06/16/98	(center)	75	70	74	74	69	66	72	67	65	75	90
06/03/98	(center)	74	73	71	73	68	69	73	66	66	74	90
06/10/98	(center)	72	70	71	70	67	66	69	63	63	72	90
06/23/98	(center)	79	75	77	78	70	71	76	66	67	79	90
07/07/98	(center)	81	79	81	81	74	78	80	71	72	81	90
07/17/98	(center)	85	84	85	83	78	77	82	73	75	85	90
07/23/98	(center)	83	84	83	83	78	77	82	74	75	84	90
08/07/98	(center)	81	79	77	81	76	74	80	73	70	81	90
08/04/98	(center)	83	82	81	83	78	78	82	75	75	83	90
08/14/98	(center)	84	81	81	82	76	76	82	72	72	84	90
08/20/98	(center)	83	79	82	82	78	76	82	75	75	83	90
08/28/98	(center)	84	80	81	84	76	75	84	73	73	84	90
09/04/98	(center)	82	81	81	82	78	77	81	75	74	82	90
09/10/98	(center)	80	76	77	80	79	74	79	72	72	80	90
09/17/98	(center)	82	80	80	81	77	75	81	72	72	82	90
09/23/98	(center)	79	78	78	74	73	74	78	70	70	79	90
09/30/98	(center)	76	75	76	76	70	71	75	67	67	76	90
10/26/98	(center)	69	66	64	69	60	61	68	57	55	69	78
10/26/98	(east bank)	69	66		69	60		68	57			78
10/26/98	(west bank)	68	66		69	61		68	56			78
11/24/98	(center)	58	57	56	58	54	53	57	51	51	58	70
11/24/98	(east bank)	58	58		58	55		57	52			70
11/24/98	(west bank)	58	56		57	54		57	51			70

EXHIBIT C

ArcelorMittal Indiana Harbor West
Instream Temperature Monitoring Study
Monthly Average Air Temperature Statistics at Ogden Dunes, IN
1970 to 2009

Amendola Engineering, Inc.
11/16/2010

		JAN	FEB	MAR	APR	MAY	JUN	JUL	AUG	SEP	OCT	NOV	DEC
Temperature Study	1997	43.4	51.6	54.4	58.3	62.9	72.6	74.2	71.8	70.3	62.6	54.9	50.8
Temperature Study	1998	49.4	56.1	54.6	62.0	68.7	73.3	74.3	74.5	73.2	64.1	59.1	53.0
AVG Monthly Average Temperature		46.0	50.1	53.7	61.2	64.7	71.2	72.4	72.7	70.3	61.6	56.5	48.9
MAX Monthly Average Temperature		52.8	56.1	58.4	64.9	71.3	76.3	77.1	76.9	74.1	68.2	61.4	54.5

Temperature Data Sources

1970-1989 - Station No. 12654299999

1990-2009 - Station No. 12424499999

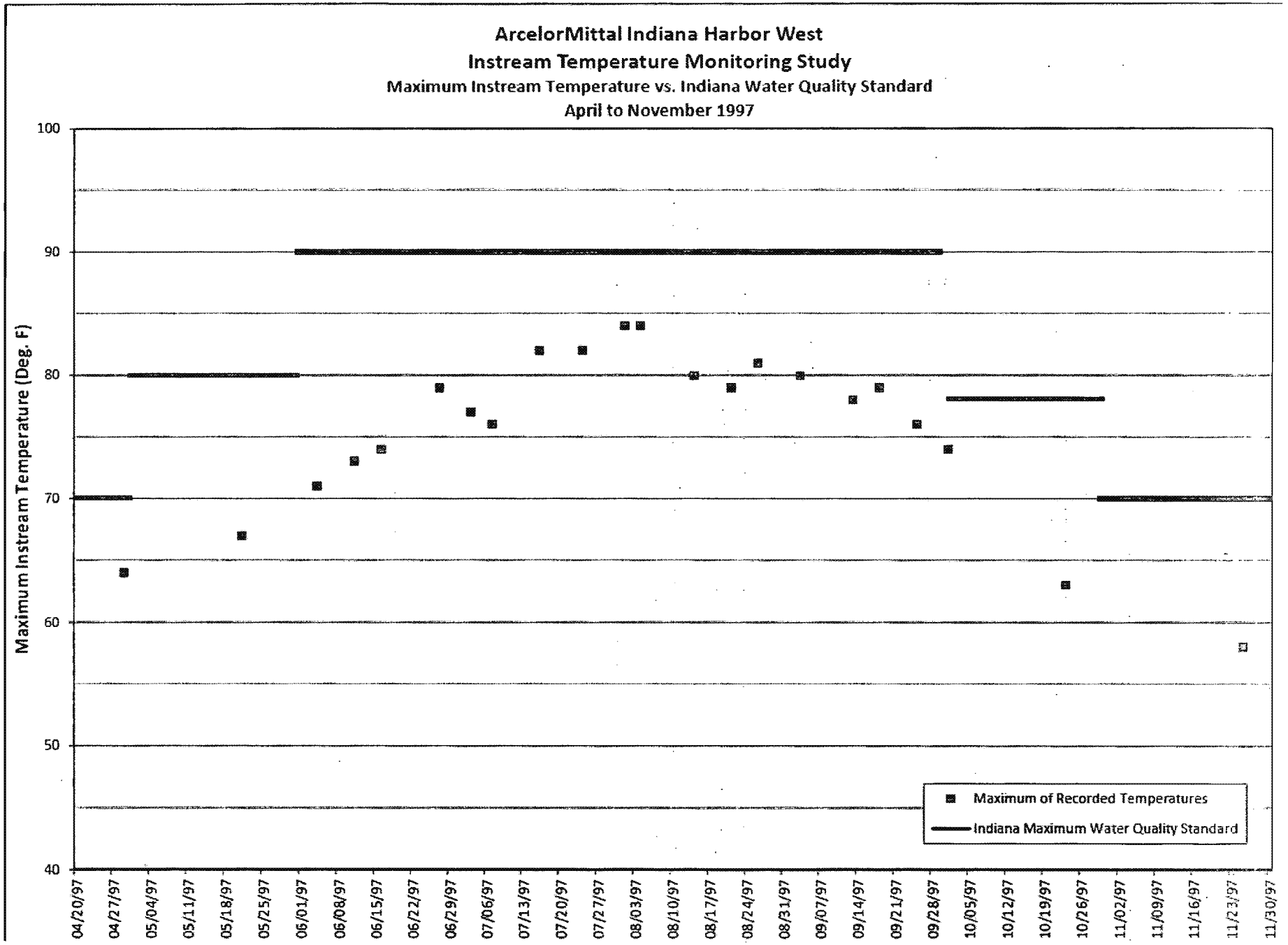

ED_002857_00000137-00238

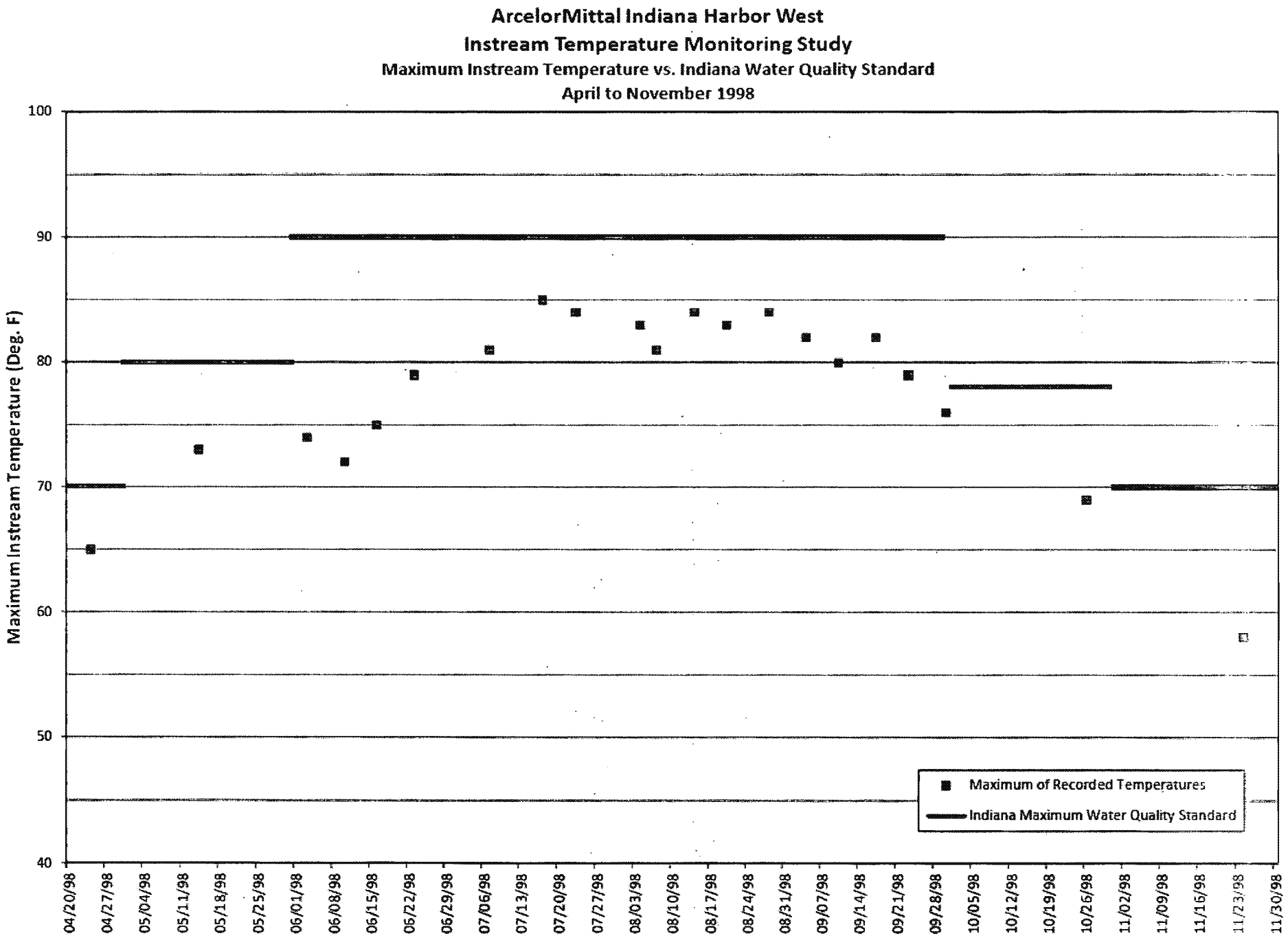

ED_002857_00000137-00239

ArcelorMittal Indiana Harbor West
Instream Temperature Monitoring Study
1997 and 1998 Monthly Average Air Temperatures at Ogden Dunes, IN
Compared to 1970-2009 Average Monthly Air Temperatures

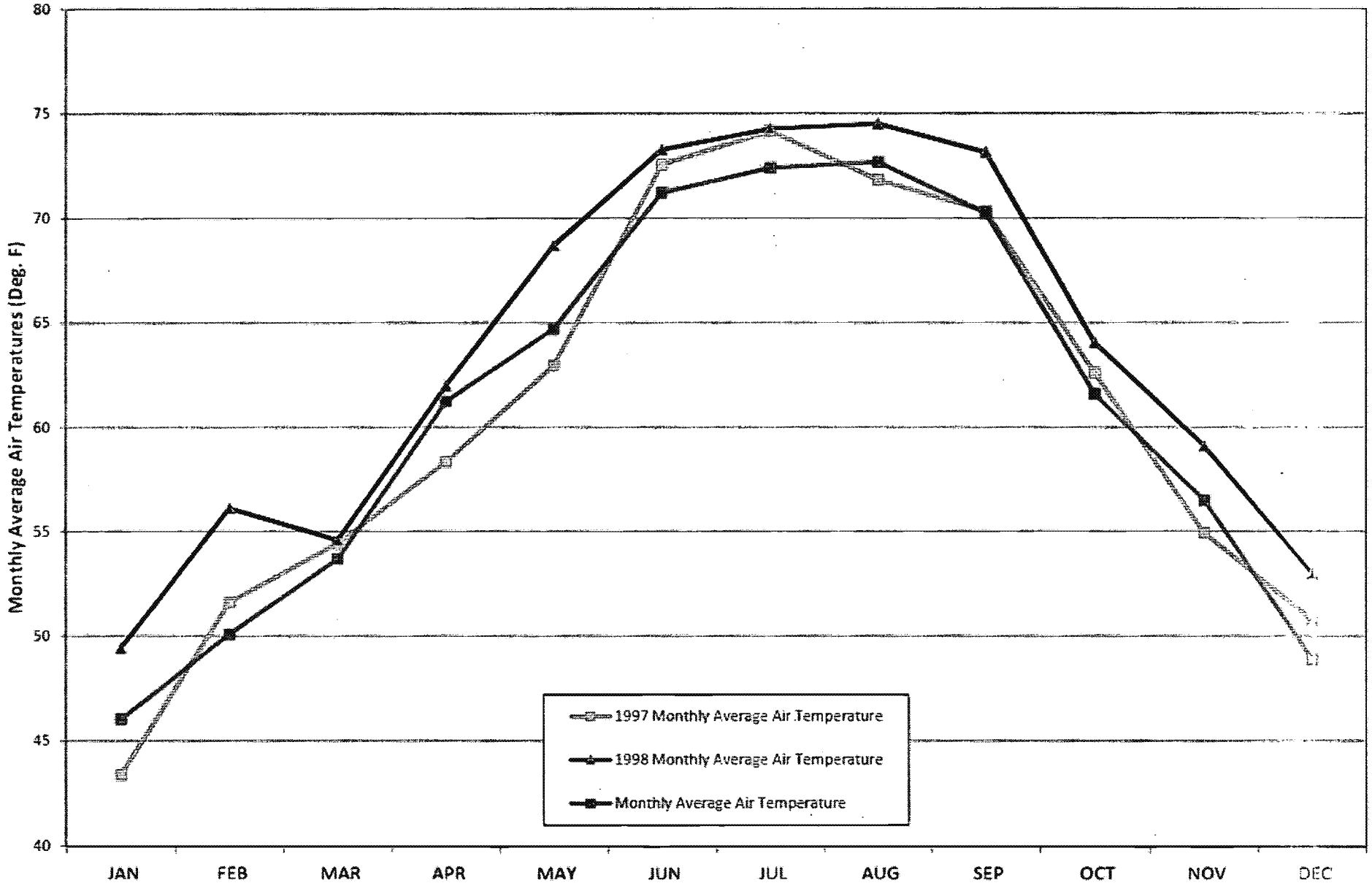

IDEM Fixed Station Monitoring Data for Cyanide (Stations IHC - 0 and IHC - 2)

IHC - 0 (IHSC near ArcelorMittal West Outfall 011) (mg/l)			
Date	CATC	F. CN	T. CN
1/23/1990			0.007
2/27/1990			0.008
3/27/1990			< 0.005
4/24/1990			< 0.005
6/5/1990			< 0.005
8/7/1990			< 0.005
9/18/1990			< 0.005
10/2/1990			< 0.005
11/27/1990			< 0.005
1/16/1991			0.006
2/12/1991			0.009
4/17/1991			0.007
5/22/1991			< 0.005
7/24/1991			< 0.005
8/14/1991			< 0.005
10/22/1991			< 0.005
11/20/1991			< 0.005
2/25/1992			0.007
3/25/1992			< 0.005
4/21/1992			< 0.005
5/19/1992			< 0.005
6/23/1992			< 0.005
9/22/1992			< 0.005
10/20/1992			< 0.005
11/17/1992			< 0.005
3/16/1993			< 0.005
4/26/1993			0.006
5/11/1993			< 0.005
8/2/1993			< 0.005
9/8/1993			0.011
9/29/1993			0.006
10/27/1993			< 0.005
11/16/1993			< 0.005
12/28/1993			0.01
2/1/1994			0.007
3/2/1994			< 0.005
3/15/1994			< 0.005
4/26/1994			< 0.005
6/1/1994			
8/1/1994			0.009
8/31/1994			0.006
10/3/1994			< 0.005
11/9/1994			0.008
1/18/1995			0.012
3/7/1995			0.005
4/27/1995			< 0.005

IHC-2 (IHSC at Dickey Road) (mg/l)			
Date	CATC	F. CN	T. CN
1/23/1990			< 0.005
2/27/1990			0.008
3/27/1990			< 0.005
4/24/1990			0.005
5/15/1990			0.007
6/5/1990			0.008
4/26/1993			< 0.005
5/11/1993			< 0.005
8/2/1993			< 0.005
9/8/1993			< 0.005
9/29/1993			0.006
10/27/1993			0.007
11/17/1993			< 0.005
12/23/1993			0.006
2/1/1994			< 0.005
3/2/1994			0.005
3/15/1994			0.006
4/26/1994			0.005
6/1/1994			
8/1/1994			0.005
8/31/1994			< 0.005
10/3/1994			< 0.005
11/9/1994			0.006
1/17/1995			0.01
3/7/1995			< 0.005
4/26/1995			< 0.005
5/18/1995			< 0.005
6/15/1995			0.007
7/26/1995			0.007
8/29/1995			< 0.005
9/26/1995			< 0.005
10/24/1995			< 0.005
11/14/1995			0.005
12/20/1995			< 0.005
1/22/1996			0.006
2/27/1996			< 0.005
3/25/1996			0.005
4/23/1996			0.008
5/21/1996			0.006
6/18/1996			0.009
7/16/1996			0.006
8/20/1996			0.007
9/17/1996			< 0.005
10/22/1996			0.006
11/12/1996			0.007
12/10/1996			0.009

IDEM Fixed Station Monitoring Data for Cyanide (Stations IHC - 0 and IHC - 2)

IHC - 0 (IHSC near ArcelorMittal West Outfall 011) (mg/l)			
Date	CATC	F. CN	T. CN
5/19/1995			< 0.005
6/15/1995			< 0.005
7/26/1995			< 0.005
8/29/1995			< 0.005
9/26/1995			< 0.005
10/24/1995			< 0.005
11/14/1995			0.006
12/20/1995			< 0.005
1/22/1996			0.008
2/27/1996			0.007
3/25/1996			0.005
4/23/1996			< 0.005
5/21/1996			0.006
6/18/1996			0.008
7/16/1996			0.006
8/20/1996			< 0.005
9/17/1996			0.029
10/22/1996			0.005
11/12/1996			0.006
12/10/1996			< 0.005
2/4/1997			0.006
2/25/1997			0.007
4/1/1997			< 0.005
4/29/1997			< 0.005
5/27/1997			< 0.005
6/17/1997			0.005
7/22/1997			< 0.005
8/19/1997			< 0.005
9/23/1997			< 0.005
10/20/1997			< 0.005
11/17/1997			< 0.005
12/8/1997			< 0.005
2/3/1998			< 0.005
3/3/1998	0.005		0.006
3/31/1998			< 0.005
4/27/1998			< 0.005
6/2/1998			< 0.005
6/29/1998			< 0.005
7/27/1998			< 0.005
8/31/1998			< 0.005
9/28/1998			< 0.005
10/26/1998			< 0.005
11/16/1998			< 0.005
12/14/1998			< 0.005
1/25/1999	0.005		0.009
2/22/1999			< 0.005

IHC-2 (IHSC at Dickey Road) (mg/l)			
Date	CATC	F. CN	T. CN
2/4/1997			0.009
2/25/1997			0.013
4/1/1997			0.01
4/29/1997			0.008
5/27/1997			< 0.005
6/17/1997			0.005
7/22/1997			< 0.005
8/19/1997			< 0.005
9/23/1997			< 0.005
10/20/1997			0.005
11/17/1997			0.006
12/8/1997			0.006
2/3/1998	0.005		0.007
3/3/1998	0.005		0.005
3/31/1998	0.005		0.005
4/27/1998			< 0.005
6/2/1998			< 0.005
6/29/1998			< 0.005
7/27/1998			< 0.005
8/31/1998			< 0.005
9/28/1998	0.005		0.005
10/26/1998			0.01
11/16/1998			< 0.005
12/14/1998			< 0.005
1/25/1999	0.005		0.006
2/22/1999	0.005		0.007
3/23/1999			< 0.005
4/28/1999	0.007		0.007
5/25/1999			< 0.005
6/22/1999			< 0.005
7/27/1999	0.005	< 0.005	0.005
8/25/1999		< 0.005	< 0.005
9/28/1999	< 0.005	< 0.005	0.006
10/27/1999		< 0.005	< 0.005
11/23/1999	0.005	< 0.005	0.005
12/14/1999	0.005	< 0.005	0.005
1/31/2000		< 0.005	< 0.005
2/28/2000		< 0.005	< 0.005
3/29/2000		< 0.005	< 0.005
4/26/2000		< 0.005	< 0.005
5/31/2000		< 0.005	< 0.005
6/27/2000		< 0.005	< 0.005
7/25/2000			< 0.005
8/30/2000			< 0.005
9/27/2000			< 0.005
10/30/2000			< 0.005

IDEM Fixed Station Monitoring Data for Cyanide (Stations IHC - 0 and IHC - 2)

IHC - 0 (IHSC near ArcelorMittal West Outfall 011) (mg/l)			
Date	CATC	F. CN	T. CN
3/23/1999			< 0.005
4/28/1999			< 0.005
5/25/1999			< 0.005
6/22/1999			< 0.005
7/28/1999		< 0.005	< 0.005
8/25/1999		< 0.005	< 0.005
9/28/1999	0.006	< 0.005	0.006
10/27/1999		< 0.005	< 0.005
11/23/1999		< 0.005	< 0.005
12/29/1999	0.005	< 0.005	0.007
1/31/2000	0.005	0.014	0.017
2/28/2000	0.005	0.015	0.021
3/29/2000	0.011	0.006	0.011
4/27/2000	0.45	0.545	0.521
5/31/2000	0.005	0.005	0.008
6/27/2000	0.005	< 0.005	0.007
7/25/2000			0.009
8/30/2000			0.014
9/27/2000			0.008
10/31/2000			0.008
11/28/2000			0.03
12/18/2000			0.005
1/30/2001		< 0.005	< 0.005
2/26/2001		< 0.005	
3/20/2001		< 0.005	< 0.005
4/18/2001		< 0.005 (QJ)	< 0.005
5/29/2001			< 0.005
6/25/2001			< 0.005
7/23/2001	0.005	< 0.005	0.005
8/22/2001			< 0.005 (QJ)
9/24/2001	0.017	0.014	0.034
10/16/2001	< 0.005	< 0.005	0.008
11/26/2001	0.007	0.032	0.079
12/17/2001	< 0.005	0.006	0.012
1/23/2002			< 0.005
2/25/2002			< 0.005
3/27/2002			< 0.005
4/22/2002			< 0.005
5/13/2002			< 0.005 (QJ)
6/24/2002			< 0.005
7/24/2002			< 0.005
9/23/2002			< 0.005
10/30/2002			< 0.005
11/20/2002			< 0.005
12/18/2002			< 0.005
1/15/2003			< 0.005

IHC-2 (IHSC at Dickey Road) (mg/l)			
Date	CATC	F. CN	T. CN
11/28/2000			0.008
12/18/2000			0.007
10/30/2000			< 0.005
1/30/2001	< 0.005	< 0.005	0.007
2/26/2001		< 0.005	
3/20/2001		< 0.005	< 0.005
4/18/2001		< 0.005 (QJ)	< 0.005
5/29/2001			< 0.005
6/25/2001			< 0.005
7/23/2001			< 0.005
8/22/2001			< 0.005 (QJ)
9/24/2001			< 0.005
10/16/2001			< 0.005
11/26/2001	0.005	< 0.005	0.005
12/17/2001	0.005	< 0.005	0.005
1/23/2002			< 0.005
2/25/2002			< 0.005
3/27/2002			< 0.005
4/22/2002			< 0.005
5/13/2002			< 0.005 (QJ)
6/24/2002			< 0.005
7/24/2002			< 0.005
8/26/2002			< 0.005
9/23/2002			< 0.005
10/30/2002			< 0.005
11/20/2002			< 0.005
12/18/2002	0.006	< 0.005	0.006
1/15/2003			< 0.005
2/19/2003			< 0.005
3/19/2003			< 0.005
4/23/2003			< 0.005
5/12/2003			< 0.005
6/11/2003			< 0.005
7/7/2003			< 0.005
8/11/2003			< 0.005
9/10/2003			< 0.005
10/22/2003			< 0.005
11/19/2003			< 0.005
12/17/2003	0.005 (UJ)	< 0.005	0.006
1/8/2004			< 0.005
2/18/2004			< 0.005
3/30/2004			
4/21/2004			< 0.005
5/26/2004			< 0.005
6/16/2004			< 0.005
7/19/2004			< 0.005

IDEM Fixed Station Monitoring Data for Cyanide (Stations IHC - 0 and IHC - 2)

IHC - 0 (IHSC near ArcelorMittal West Outfall 011) (mg/l)			
Date	CATC	F. CN	T. CN
2/19/2003			< 0.005
3/19/2003			< 0.005
4/23/2003			< 0.005
5/12/2003			< 0.005
6/11/2003			< 0.005
7/7/2003			< 0.005
8/11/2003			< 0.005
9/10/2003			< 0.005
10/22/2003			< 0.005
11/20/2003			< 0.005
12/17/2003			< 0.005
1/7/2004			< 0.005
2/19/2004			< 0.005
3/30/2004			
4/21/2004			< 0.005
5/26/2004			< 0.005
6/16/2004			< 0.005
7/19/2004			< 0.005
8/16/2004			< 0.005
9/21/2004			< 0.005
10/26/2004			< 0.005
11/30/2004			< 0.005
12/20/2004			< 0.005
1/12/2005			< 0.005
2/24/2005			< 0.005
3/21/2005			< 0.005
4/27/2005			< 0.005
5/24/2005			< 0.005
6/27/2005			< 0.005
7/28/2005			< 0.005
8/22/2005			< 0.005
9/26/2005			< 0.005
11/28/2005			< 0.005
12/14/2005			< 0.005
2/6/2006			< 0.005
3/15/2006			< 0.005
4/26/2006			< 0.005
5/22/2006			< 0.005
6/21/2006			< 0.005
7/10/2006			< 0.005
8/14/2006			< 0.005
9/26/2006			< 0.005
10/19/2006			< 0.005
11/28/2006			< 0.005
12/18/2006			< 0.005
1/22/2007			< 0.005

IHC-2 (IHSC at Dickey Road) (mg/l)			
Date	CATC	F. CN	T. CN
8/16/2004			< 0.005
9/20/2004			< 0.005
10/25/2004			< 0.005
11/29/2004			< 0.005
12/20/2004			< 0.005
1/12/2005	0.006	< 0.005	0.006
2/23/2005	0.005	< 0.005	0.005
3/21/2005			< 0.005
4/27/2005			< 0.005
6/27/2005			< 0.005
7/27/2005			< 0.005
8/22/2005			< 0.005
9/26/2005			< 0.005
10/26/2005			< 0.005
11/28/2005			< 0.005
12/14/2005			< 0.005
1/12/2006			< 0.005 (QJ)
2/6/2006			< 0.005
3/15/2006			< 0.005
4/26/2006			< 0.005
5/22/2006			< 0.005
6/21/2006			< 0.005
7/11/2006			< 0.005
8/14/2006			< 0.005
9/25/2006			< 0.005
10/18/2006			< 0.005
11/27/2006			< 0.005
12/18/2006	0.005	< 0.005	0.005
1/22/2007			< 0.005
2/19/2007			< 0.005
3/28/2007			< 0.005
4/25/2007			< 0.005
5/30/2007			< 0.005
6/20/2007			< 0.005
7/30/2007			< 0.005
8/27/2007	0.005	< 0.005	0.005
9/24/2007			< 0.005
10/29/2007			< 0.005
11/19/2007			< 0.005
12/17/2007			< 0.005
1/9/2008			< 0.005
2/20/2008			< 0.005
3/18/2008			< 0.005
4/21/2008			< 0.005
5/28/2008			< 0.005
6/10/2008			< 0.005

IDEM Fixed Station Monitoring Data for Cyanide (Stations IHC - 0 and IHC - 2)

IHC - 0 (IHSC near ArcelorMittal West Outfall 011) (mg/l)			
Date	CATC	F. CN	T. CN
2/19/2007			< 0.005
3/28/2007			< 0.005
4/26/2007			< 0.005
5/30/2007			< 0.005
6/21/2007			< 0.005
7/30/2007			< 0.005
8/27/2007			< 0.005
9/24/2007			< 0.005
10/29/2007			< 0.005
11/19/2007			< 0.005
12/17/2007			
1/9/2008			
2/20/2008			
3/18/2008			< 0.005
4/21/2008			
5/28/2008			
6/10/2008			
7/28/2008			
8/26/2008			
9/23/2008			
10/27/2008			
11/19/2008			
12/15/2008			
1/21/2009			
2/9/2009			
3/4/2009			
4/21/2009			
5/18/2009			
6/10/2009			
7/27/2009			
8/19/2009			
9/21/2009			
10/7/2009			
11/4/2009			
12/14/2009			
1/19/2010			
2/15/2010			

IHC-2 (IHSC at Dickey Road) (mg/l)			
Date	CATC	F. CN	T. CN
7/28/2008			< 0.005
8/26/2008			< 0.005
9/23/2008			< 0.005
10/27/2008			< 0.005
11/19/2008			< 0.005
12/15/2008			< 0.005
1/21/2009			< 0.005
2/9/2009			< 0.005
3/4/2009			< 0.005
4/21/2009			< 0.005
5/18/2009			< 0.005
6/10/2009			< 0.005
7/27/2009			< 0.005
8/19/2009			< 0.005
9/21/2009			< 0.005
10/7/2009			< 0.005
11/4/2009			< 0.005
12/14/2009			< 0.005
1/19/2010			< 0.005
2/15/2010			< 0.005

327 IAC 2-1.5-2 (64)

"Open waters of Lake Michigan" means all of the waters within Lake Michigan lakeward from a line drawn across the mouth of tributaries to the lake, including all waters enclosed by constructed breakwaters. For the Indiana Harbor Ship Canal, the boundary of the open waters of Lake Michigan is delineated by a line drawn across the mouth of the harbor from the East Breakwater Light (1995 United States Coast Guard Light List No. 19675) to the northernmost point of the LTV Steel property along the west side of the harbor.

ArcelorMittal Indiana Harbor West Intake No. 3 to the open waters of Lake Michigan:	~1,100 feet (~0.21 miles)
ArcelorMittal Indiana Harbor West Intake No. 2 to the open waters of Lake Michigan:	~5,300 feet (~1.0 miles)

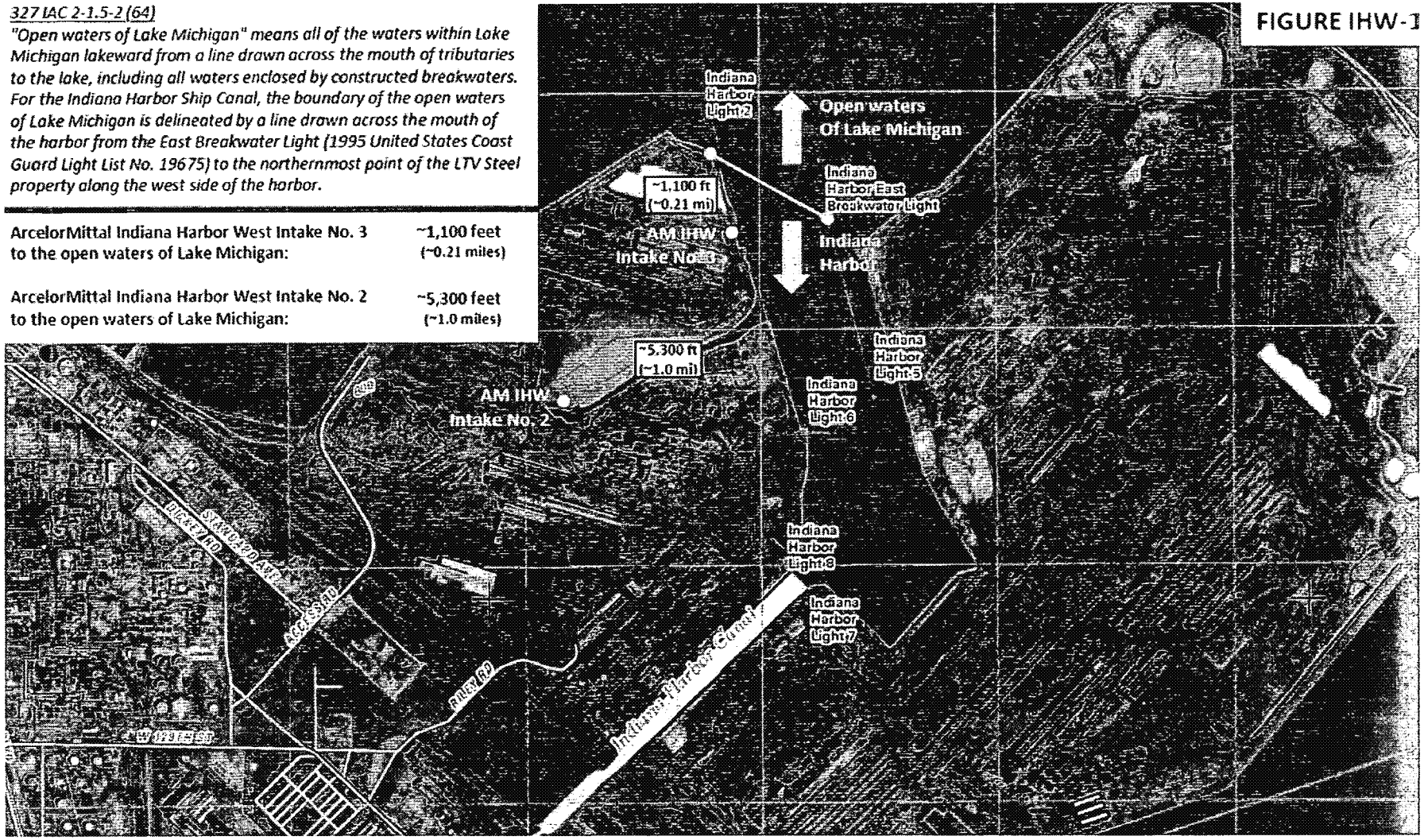

SCALE 1:24 000

1 0.5 0 KILOMETERS 1 2

1000 500 0 METERS 1000 2000

1 0.5 0 1

MILES

1000 0 1000 2000 3000 4000 5000 6000 7000 8000 9000 10000

FEET

Produced by the United States Geological Survey
North American Datum of 1983 (NAD83)
World Geodetic System of 1984 (WGS84). Projection and 1 000-meter grid: Universal Transverse Mercator, Zone 16T
10 000-foot ticks: Indiana Coordinate System of 1983
(west zone)
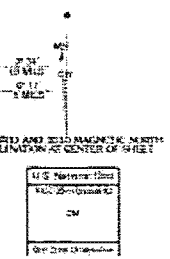
Imagery.....NAIP, August 2008
Roads.....US Census Bureau TIGER data with limited USGS updates, 2008
Names.....GNIS, 2008
Hydrography.....National Hydrography Dataset, 2008
Contours.....National Elevation Dataset, 2003