DEPARTMENT OF THE NAVY
BASE REALIGNMENT AND CLOSURE
PROGRAM MANAGEMENT OFFICE WEST
1455 FRAZEE RD, SUITE 900
SAN DIEGO, CA 92108-4310

5090
Ser BPMOW.hgk/0740
DEC 12 2012

Craig Cooper
U.S. Environmental Protection Agency, Region IX
75 Hawthorne Street (SFD-8-3)
San Francisco, CA 94105-3901

Ryan Miya
Department of Toxic Substances Control
700 Heinz Avenue, Bldg. F, Suite 200
Berkeley, CA 94710-2737

Ross Steenson
San Francisco Bay Regional Water Quality Control Board
1515 Clay Street, Suite 1400
Oakland, CA 94612

Dear BCT members:

Enclosure (1) is the Final Remedial Action Work Plan for Parcel G, Hunters Point Naval Shipyard, San Francisco, California, December 12, 2012.

If you have any concerns with this matter, please contact Hamide Kayaci at (619) 532-0930, or me at (619) 532-0913.

Sincerely,

KEITH FORMAN
BRAC Environmental Coordinator
By direction of the Director

Enclosure: 1. Final Remedial Action Work Plan for Parcel G, Hunters Point Naval Shipyard San Francisco, California, December 12, 2012.

Copy to: (Hard Copy and CD)

Dorinda Shipman
Treadwell & Rollo
555 Montgomery Street
Suite 1300
San Francisco, CA 94111

Diane Silva
(3 hard copies + 1 CD)
NAVFAC SWDIV Code EV33
Naval Base San Diego
2965 Mole Rd, Bldg 3519
San Diego, CA 92136

Karla Brasaemle
Tech Law, Inc.
90 New Montgomery Street
Suite 710
San Francisco, CA 94105

Leslie Lundgren
Senior Project Manager
CH2M Hill
150 Spear St., Suite 750
San Francisco, CA 94105

Copy to: (CD only)

Amy Brownell
Department of Public Health
1390 Market Street, Suite 210
San Francisco, CA 94102

Steven Proud
Lennar BVHP
1 California Street, Suite 1700
San Francisco, CA 94111

Copy to: (CD only)

Michael Sharpless
Paul Hastings
55 2nd Street, 24th Floor
San Francisco, CA 94104

Randy Brandt
Geosyntec Consultants
475 14th Street, Suite 400
Oakland, CA 94612

Martha Walters
Arc Ecology
1907 Fifth Avenue
San Rafael, CA 94124

Elaine Warren
Office of City Attorney
City Hall, Room 234
1 Dr. Carlton B. Goodlett Place
San Francisco, CA 94102

Copy to: (Hardcopy Only)

Mitzy Kanbara
City of San Francisco
Public Library
Gov. Information Center
100 Larkin Street, 5th floor
San Francisco, CA 94102

Sharae Brown
1971 Quint Street
San Francisco, CA 94124
(hand delivered)

Department of the Navy
Base Realignment and Closure Program
Management Office West

FINAL
Remedial Action Work Plan for Parcel G, Hunters Point Naval Shipyard, San Francisco, California

Contract: N62473-11-D-2226, PTO 0002

December 2012

DCN#: ARCA-2226-0002-0003

ARCADIS

FINAL
Remedial Action Work Plan for Parcel G, Hunters Point Naval Shipyard, San Francisco, California

DCN: ARCA-2226-0002-0003

Scott Morris, PE
Principal Civil Engineer, Project Manager

Ron Goloubow, PG
Principal Geologist

William Beaman, PE
Principal Civil Engineer

Prepared for:
Department of the Navy
Base Realignment and Closure Program
Management Office West

Prepared by:
ARCADIS U.S., Inc.
9095 Rio San Diego Drive
#240
San Diego
California 92108
Tel 619 291 7800
Fax 619 291 5400

Our Ref.:
CA000776.0002.00002

Date:
December 2012

This document is intended only for the use of the individual or entity for which it was prepared and may contain information that is privileged, confidential and exempt from disclosure under applicable law. Any dissemination, distribution or copying of this document is strictly prohibited.

Acronyms and Abbreviations **vi**

1. Introduction and Background Information **1**

1.1 Site Location 2

1.2 History 2

1.3 Geology and Hydrogeology 2

1.4 Nature and Extent of Contamination 4

1.4.1 Soil 4

1.4.2 Radionuclides 5

1.4.3 Groundwater 5

1.4.4 Soil Vapor 6

1.4.5 Institutional and Land Use Controls 6

2. Project Description **7**

2.1 Project Overview 7

2.1.1 Reuse of Existing Materials Available at Parcel G 7

2.2 Project Organization 9

2.3 Project Schedule 10

3. Existing Site Conditions **10**

4. Existing Surface Conditions and Proposed Approach **12**

4.1 Existing AC Pavement 12

4.2 Existing Clean Crushed Drain Rock Material in Swales 12

4.3 Existing Imported Road Base Material 13

4.4 Existing Exposed Soil 13

4.5 Existing Exterior Concrete/Hardscape 14

4.6 Existing Interior Concrete Building Foundations 16

5. Construction Activities **16**

5.1 Pre-Construction Activities 17

5.1.1 Pre-Construction Conference and Meetings 17

5.1.2 Permitting 18

5.1.3 Above Ground and Underground Utility Clearance 18

5.1.4 Field Observations, Photo Documentation, and Site Topographic Survey 18

5.1.5 Grading, Drainage, and Paving Plan Preparation 19

5.2 Construction Activities 20

5.2.1 Mobilization and Site Preparation 20

5.2.1.1 Site Access, Security, and Working Hours 20

5.2.1.2 Equipment Mobilization 21

5.2.1.3 Traffic Control 22

5.2.1.4 Temporary Utilities 23

5.2.1.5 Surveying 23

5.2.1.6 Delineation of Work and Support Zones 23

5.2.1.7 Establishment of Environmental Controls 24

5.2.1.8 Site Preparation - Clearing & Grubbing 26

5.2.2 Durable Cover Installation 27

5.2.2.1 Overall Durable Cover Construction 27

5.2.2.2 Existing Road Base Material and Subgrade Preparation 30

5.2.2.3 Aggregate Base Material Placement 31

5.2.2.4 Asphaltic Concrete Placement 31

5.2.2.5 Asphalt Seal 32

5.2.2.6 North - South Streets 32

5.2.2.7 East-West Spaces between Buildings 33

5.2.2.8 Building Foundation Repair and Securing Crawl Spaces 34

5.2.2.9 Drainage Improvements 34

5.2.3 Site Cleanup and Demobilization 35

5.3 Post-Construction Activities 36

5.3.1 Completion Inspections 36

5.3.2 As-Built Survey 37

6. Project Requirements 37

6.1 Contractor Quality Control Plan 37

6.2 Health and Safety Plan 38

6.2.1 Accident Prevention Plan and Site Safety and Health Plan 38

6.3 Environmental Protection Plan 39

6.3.1 CERCLA Stormwater Plan 39

6.3.2 Dust Control Plan 39

6.4 Waste Management Plan 40

6.5 Traffic Control Plan 41

6.6 Remedial Action Completion Report 41

6.7 Remedial Action Fact Sheet 42

6.8 State Historic Preservation Office Letter 42

6.9 Operation and Maintenance Plan 42

7. References 43

Tables

Table 1 Existing Groundwater Monitoring Wells at Parcel G

Figures

Figure 1 Location Map

Figure 2 Hunters Point Map

Figure 3 Historical Parcel G Aerial (2005)

Figure 4 Parcel G Map

Figure 5 Finished Durable Cover Plan

Figure 6A/B Conceptual Cover Cross Sections

Figure 7 Project Schedule

Figure 8 Support Zone Layout

Figure 9 Predominant Pavement Sections on the North-South Roadways

Figure 10 Morrell Street Typical Cross Section

Figure 11 Cochrane Street Typical Cross Section

Figure 12 Hussey Street Typical Cross Section

Figure 13 H Street Typical Cross Section

Figure 14 Grading Scheme for Excess Material Grading Area

Appendices

A Grading, Drainage, and Paving Plan

B Contractor Quality Control Plan

C Traffic Control Plan

D Environmental Protection Plan Part 1 – Dust Control Plan

E Environmental Protection Plan Part 2 – CERCLA Stormwater Plan

F Waste Management Plan

G Existing Conditions Field Observations

H Response to Comments

Acronyms and Abbreviations

AB	aggregate base
AC	asphaltic concrete
APP	Accident Prevention Plan
ARAR	Applicable or Relevant and Appropriate Requirement
ARCADIS	ARCADIS U.S., Inc.
ARIC	area requiring institutional controls
BMP	best management practice
BRAC	Base Realignment and Closure
Caltrans	California Department of Transportation
CERCLA	Comprehensive Environmental Response, Compensation, and Liability Act
COC	constituent of concern
CQC	Contractor Quality Control
CSO	Caretaker Site Office
DCP	Dust Control Plan
ERRG	Engineering/Remediation Resources Group, Inc.
FS	Feasibility Study
FSP	Field Sampling Plan
HPNS	Hunters Point Naval Shipyard
HSP	Health and Safety Plan
KO	Contracting Officer
msl	mean sea level
NAD	North American Datum
NAVFAC	Naval Facilities Engineering Command
Navy	United States Department of the Navy
NGVD	National Geodetic Vertical Datum
O&M	operation and maintenance
PAH	polycyclic aromatic hydrocarbon
PCE	tetrachloroethene
PM10	particulate matter less than 10 microns in diameter
PPE	personal protective equipment
QAPP	Quality Assurance Project Plan
QC	quality control
RA	Remedial Action
RACR	Remedial Action Completion Report
RAWP	Remedial Action Work Plan
RD	Remedial Design

ROD	Record of Decision
ROICC	Resident Officer In Charge of Construction
RPM	Remedial Project Manager
SFRA	San Francisco Redevelopment Agency
SHPO	State Historic Preservation Office
SSHO	Site Safety and Health Officer
SSHP	Site Safety and Health Plan
SWP	Stormwater Plan
TCE	trichloroethene
TCP	Traffic Control Plan
TCRA	Time-Critical Removal Action
Tetra Tech	Tetra Tech EC, Inc.
TSP	total suspended particles
UFC	Unified Facilities Criteria
USACE	U.S. Army Corps of Engineers
USEPA	U.S. Environmental Protection Agency
USFT	U.S. survey feet

1. Introduction and Background Information

ARCADIS U.S., Inc. (ARCADIS) has prepared this Remedial Action Work Plan (RAWP) for the Department of the Navy (Navy) Base Realignment and Closure (BRAC) Program to discuss the implementation of the Remedial Action (RA) at Parcel G, Hunters Point Naval Shipyard (HPNS), San Francisco, California (site). This RAWP and the proposed implementation discussed herein have been developed in accordance with the Remedial Design (RD) package (ChaduxTt 2010). The RD was developed to provide a final soil remedy design which is compliant with the Parcel G Record of Decision (ROD; Navy, 2009). This document describes the implementation of the durable cover component of the approved ROD at Parcel G and developed in the RD, which is the final component of the overall RA at Parcel G. A summary of the other actions that have been completed in order to address the ROD are described in Section 1.4.

The purpose of the durable cover is to address the Remedial Action Objective (RAO) for soil referenced in the ROD, which specifically is to;

- "Prevent exposure to organic and inorganic chemicals in soil at concentration above remediation goals developed in the [Human Health Risk Assessment] for the following exposure pathways:

    (a) Ingestion of, outdoor inhalation of, and dermal exposure to surface and subsurface soil..."

For the preparation of this RAWP, an investigation of existing conditions was carried out and the findings were synthesized, leading to an optimal design for the site. The work commenced with field observations and research of previous completion reports that have been conducted to develop an understanding of the existing surface conditions at the site, which promoted the development of the proposed design for construction of a durable cover. By incorporating existing hardscape surfaces and imported road base materials observed at the site, the proposed durable cover design meets the requirements of a durable cover across the entire site. Optimizing the use of existing materials at the site as well as eliminating the need to export soil or demolished pavement reduces waste and potential impacts on the community. This approach leads to reductions in noise, emissions, and truck traffic on local streets. In addition, the proposed design places sustainability and the environment at the forefront by appropriately using existing road base materials in place with approval from the regulators. In addition, the conscious decision was made to use imported 100 percent

recycled concrete AB material to supplement the existing road base material for the construction of the durable cover with approval from the regulators.

1.1 Site Location

HPNS is located in San Francisco, California (Figure 1). The overall HPNS property encompasses approximately 866 acres on a peninsula that extends into San Francisco Bay in the southeastern portion of San Francisco. HPNS is divided into 10 parcels: B, C, D-1, D-2, E, E-2, F, G, UC-1, and UC-2 (Figure 2). Parcel G occupies approximately 40 acres in the center of HPNS and does not border San Francisco Bay. This entire parcel was originally paved, except for its southeast corner (Figure 3).

Parcel G is bounded on the north and south by Spear Avenue and Manseau Street, respectively; and on the east and west by Morrell and H Streets, respectively. Parcel G is crossed by four streets in the north-south direction; from east to west they are Morrell, Cochrane, Hussey, and H Streets (Figure 4).

1.2 History

Naval shipbuilding, repair, and maintenance activities occurred at HPNS between 1939 and the 1960s. After World War II, HPNS was used for the decontamination of ships used for atomic weapons testing in the South Pacific and as the location of the Naval Radiological Defense Laboratory from 1946 to 1969. HPNS was made inactive in 1974 and most of the property was leased to Triple A Machine Shop, Inc., a private ship repair company, between 1976 and 1986. The Navy reoccupied HPNS in 1987. Parcel G was formerly used for industrial support that included office and commercial activities such as shipping and ship repair.

1.3 Geology and Hydrogeology

This section summarizes the geologic and hydrogeologic conditions at HPNS and Parcel G. The information presented in this section was adapted from the RD (ChaduxTt 2010).

The peninsula that forms HPNS is within a northwest-trending belt of Franciscan Complex bedrock known as the Hunters Point Shear Zone. HPNS is underlain by five geologic units: the youngest of Quaternary age, and the oldest, the Franciscan Complex bedrock, of Jurassic-Cretaceous age. In general, the stratigraphic sequence of these geologic units, from youngest (shallowest) to oldest (deepest), is as follows:

Artificial Fill, Undifferentiated Upper Sand Deposits, Bay Mud Deposits, Undifferentiated Sedimentary Deposits, and Franciscan Complex Bedrock.

Artificial Fill covers the entire surface at Parcel G. The Bay Mud separates the Undifferentiated Upper Sands and the Artificial Fill from the lower Undifferentiated Sedimentary Deposits throughout Parcel G.

The Franciscan Complex contains a variety of rock types, including basalt, chert, sandstone, shale, and serpentinite. Some of these rock types contain wide-ranging concentrations of naturally occurring metals; serpentinite also contains naturally occurring asbestos minerals.

Parcel G consists of flat lowlands with surface elevations between 7 and 11 feet above mean sea level (msl). The parcel was constructed in the 1940s by placing borrowed fill material from various sources, including crushed serpentinite bedrock from the adjacent highlands as well as dredged sediments.

The hydrostratigraphic units at Parcel G include the A-aquifer, the aquitard, the B-aquifer, and the deep bedrock water-bearing zone. The A-aquifer consists mainly of unconsolidated Artificial Fill that overlies the aquitard and bedrock and forms a continuous zone of unconfined groundwater across the parcel. Undifferentiated Upper Sand Deposits and shallow bedrock also are part of the A-aquifer at various locations across Parcel G. The A-aquifer extends to about 15 feet below msl over most of Parcel G with depths to groundwater ranging from 2 to 10 feet below ground surface. The B-aquifer consists mainly of discontinuous lenses of Undifferentiated Sedimentary Deposits that overlie bedrock or are contained within the Bay Mud Deposits at a few locations. Bay Mud Deposits act as an aquitard that separates the A- and B-aquifers throughout Parcel G. The aquitard zone varies in thickness but extends from about 15 to about 45 feet below msl and is thickest in the southern sections of the parcel. The B-aquifer is found at depths ranging from about 10 feet below msl in the central part of Parcel G to around 40 feet below msl in the southern portion (depth to groundwater of approximately 17 feet below ground surface). The bedrock water-bearing zone is not considered an aquifer because of its low capacity for water production (primarily from fractures). The bedrock surface dips eastward toward the bay from about 5 feet below msl in northern Parcel G to about 90 feet below msl at the southern parcel boundary.

Groundwater elevations in the A-aquifer at Parcel G range from about 5 feet above msl in inland (northern) areas to near msl in southern areas closer to the shoreline. In general, groundwater flows to the southeast and southwest, away from a slight

groundwater divide along the central, long axis of the parcel and follows the topographic gradient toward San Francisco Bay (ChaduxTt 2010).

1.4 Nature and Extent of Contamination

The Navy identified activities associated with known or potential chemical releases at Parcel G and environmental investigations were conducted to identify and assess the nature and extent of contaminants in soil and groundwater. The following subsections summarize the nature and extent of contamination, and the remedies implemented to address the contamination where applicable. The ROD (Navy 2009) and the Final Revised Feasibility Study Report (FS) for Parcel D (SulTech 2007) present more details on the nature and extent of contamination. The selected remedies described in the ROD for Parcel G that together comprise the RA are: Alternative S-5 for soil, which includes excavation of contaminated soil follow by off-site disposal, covers, and institutional controls; Alternative GW-4A&G for groundwater, which involves treatment of groundwater impacted by VOCs and metals with organic compounds or ZVI followed by monitoring and institutional controls; and Alternative R-2 for radiologically impacted structures, which includes surveying existing structures, followed by excavation and off-site disposal of contaminated materials and soil. The selected remedies that comprise the RA have been fully implemented as described in the following sections except for ongoing groundwater monitoring, the durable cover portion of the selected remedy for soil, and final implementation of institutional controls. This RAWP addresses the durable cover portion of the soil remedy for Parcel G and constitutes the final component of the overall RA at Parcel G.

1.4.1 Soil

Naturally occurring metals (arsenic and manganese) are present in the imported bedrock fill upon which portions of HPNS was built. Lead and polycyclic aromatic hydrocarbons (PAH) resulting from industrial activities were the COCs present in the soil at Parcel G that posed a potential risk to human health based on current and reasonably anticipated future land uses. The Alternative remedy selected in the ROD (Alternative S-5) involved the excavation of contaminated soils and off-site disposal, installation of durable covers, and implementation of institutional controls (ROD; Navy 2009; ChaduxTt, 2010). To address the contaminated soil removal component of the selected remedy, in 2010 and 2011, the Navy excavated residual lead and PAH that was not removed in prior soil removal activities that began in 1991. Excavations were in areas where concentrations of lead and PAH exceeded remediation goals (ERRG, 2011). A separate Removal Action Completion Report was prepared for that

component of Alternative S-5. This RAWP is designed to address the remaining metals found in the imported bedrock fill material in soil to meet the requirements of Alternative S-5 in the ROD.

The bedrock fill from Parcel A and dredge spoils that were used to build the Parcel G area in the 1940s is presumed to be the source of metals other than lead, such as arsenic and manganese with concentrations above the project action level (PAL).

1.4.2 Radionuclides

In 2004, the Navy identified radiologically impacted sites, including buildings, equipment, and infrastructure at Parcel G associated with the former use of general radioactive materials and decontamination of ships used during atomic weapons testing in the South Pacific (Naval Sea Systems Command 2004). The Navy conducted a time-critical removal action (TCRA) to address potential radioactive contamination in buildings, fill areas, former building sites, storm drains, and sanitary sewers at Parcel G (see Tetra Tech 2011 for Remedial Action Completion Report for additional information on this TCRA). As a result, all areas on Parcel G have been remedied for radionuclides and have received approval for free release by the regulatory agencies.

1.4.3 Groundwater

The COCs in groundwater at Parcel G that pose a potential risk to human health based on current and potential future land uses, include volatile organic compounds (VOCs). The Navy conducted a treatability study at Parcels G and D-1 in 2008 to evaluate technologies to address VOCs in groundwater (Alliance Compliance Group, 2010), which concluded that Parcel G contained two plumes that required treatment. After the remedy was implemented, concentrations of VOCs in groundwater were measured below the remediation goals established in the ROD except for one area in the deeper part of the A-aquifer (Alliance Compliance Group, 2010). The Navy decided with concurrence from the Base Realignment and Closure Cleanup Team (BCT) not to continue to treat the deeper portions of the A-aquifer because the risk related to VOCs in groundwater was based on migration of volatile chemicals to indoor air, and the treatability study concluded that the associated risk to a commercial/industrial worker in this scenario was less than the target risk threshold. Therefore, additional treatment for VOCs was deemed unnecessary based on the results of the treatability study. The selected groundwater remediation alternative GW-4A&B in the ROD involved: in-situ pilot tests to confirm performance and support the design and layout of the

groundwater treatment system, in-situ injection of an organic compound or zero-valent iron (ZVI) to create conditions where VOCs and metals are reduced to concentrations below remedial goals, monitor VOCs and metals, and impose institutional controls until remedial goals are achieved (ROD; Navy, 2009). Therefore the groundwater Remedial Action Monitoring Plan as part of the approved RD (ChaduxTt, 2010) and revised in the Technical Memorandum for Monitoring Program Optimization (CE2-Kleinfelder, 2012) in conjunction with the treatability study and institutional controls is the final remedy for groundwater at Parcel G. This RAWP does not address groundwater monitoring.

1.4.4 Soil Vapor

The primary volatile COCs at Parcel G, based on their presence in groundwater, include carbon tetrachloride, chloroform, PCE, and TCE. In 2010, the Navy implemented a focused soil gas survey to identify locations where concentrations of COCs in soil gas may exceed action levels and to evaluate the extent of VOC areas requiring institutional controls or remediation (ChaduxTt, 2010; Sealaska, 2012). This investigation concluded that any proposed construction of enclosed structures must be approved in accordance with the "Covenant(s) to Restrict Use of the Property," Quitclaim Deed(s), and the Risk Management Plan for each parcel prior to the conduct of such activity within the Area Requiring Institutional Controls (ARIC) to ensure that the risks of potential exposure to VOC vapors are reduced to acceptable levels adequately protective of human health (Sealaska, 2012).

1.4.5 Institutional and Land Use Controls

As part of the RA for Parcel G, land use controls will be implemented to limit exposure of future landowners or users of the property to hazardous substances and to maintain the integrity of the remedy. The land use control referenced in this RAWP includes securing access to crawl spaces beneath the foundation slabs to minimize contact with soil.

In addition, various institutional and/or engineering controls will be implemented once future reuse of the site has been determined. These controls include prohibitions against growing edible items in native soil for human consumption, and use of groundwater on site. Various land uses and activities will require written approval granted by the Federal facility agreement signatories prior to their implementation. These institutional controls will be implemented and enforced through various legal mechanisms to ensure compliance (ChaduxTt, 2010).

2. Project Description

2.1 Project Overview

The Navy ROD for Parcel G selected a durable cover as the RA to be implemented to prevent human exposure with the naturally occurring metals present in the fill used to construct HPNS (ROD; Navy 2009). The durable cover at Parcel G will provide a physical barrier over the entire site to minimize potential exposure to the underlying soil. The durable cover for the areas outside of the site buildings will consist of a combination of the existing asphalt and concrete surfaces (repaired as necessary) and new asphalt pavement. The existing asphalt pavement and hardscape (curbing, utility chases, concrete pads, railroad tracks) will be repaired, left in place, or incorporated into the durable cover in accordance with the provisions of the RD. The entire exterior area of the site requiring construction of a new cover will receive a minimum of 2 inches of AC and varying thicknesses of underlying AB, which will ultimately provide a minimum of 6 inches of separation between the soil potentially impacted with COCs and the final surface. A California Licensed Professional Engineer will determine the specified treatment for areas of existing pavement with the guidance of criteria outlined in Section 32 01 17.16 of the RD Specifications (ChaduxTt, 2010). The existing building foundations also meet the requirements of the durable cover by minimizing human exposure with the underlying soil. The building foundations will be inspected and repaired as needed to meet the requirements of the durable cover. The determination of hardscape repairs will be guided by Unified Facilities Criteria Concrete Crack and Partial-Depth Spall Repair (UFC 3-270-03; U.S. Department of Defense 2001). Building crawl spaces will be secured to prevent unauthorized access.

Details regarding the existing surface conditions at the site are presented in Sections 3 and 4, and details concerning the durable cover construction are contained in Section 5. Figures 6A and 6B show conceptual cross sections of the types of completed durable cover at Parcel G.

2.1.1 Reuse of Existing Materials Available at Parcel G

Significant volumes of road base material have been deposited and spread over portions of the site and are available and suitable for reuse in the construction of the durable cover. The aggregate road base was used as fill material as part of the extensive removal actions and storm drain removals that were previously completed at the site (Removal Action Completion Reports on the Remedy for Radionuclides [RACR; Tetra Tech 2011] and for Soil Hotspot and Stockpile Removal [ERRG 2011]).

Excess material was spread over the areas to provide a complete and level surface. Materials placed as part of the remedy for radionuclides were required to satisfy the specifications set forth in the Hunter Point Shipyard Project Backfill Review and Acceptance Procedure HPO-Tt-0270 (TetraTech, 2006) while materials used in the soil hotspot and stockpile removal remedy met the requirements of the California Department of Toxic Substances Control (DTSC) Information Advisory, Clean Imported Fill Material (DTSC, 2001). This material, in locations where it was observed, was noted to be a minimum of 2 inches in thickness and as much as 6 inches or greater based on extensive field observations recorded during the condition assessment surveys that were completed in June 2012 that explored the surface conditions at targeted locations on Parcel G to a depth of 6 inches. The road base material was imported from clean off site sources (RACR; TetraTech 2011) and generally overlies the historical AC surface that had originally covered the site (Figure 3). In some of the observation locations, AC was not observed in the top 6 inches of road base material, where it can be concluded that these areas coincide with previous removal actions that removed the existing AC pavement (see Section 3 for additional details regarding the source of imported road base material). According to the RACR for the soil hotspot and stockpile removal action at Parcel G, excavations were backfilled with clean, imported backfill soil and in paved areas were topped with 6 inches of compacted imported Class II AB (ERRG, 2011).

The road base material available at the site will be reused in place to the extent possible to meet the requirements of the ROD and RD in accordance with Section 2.9.2 of the ROD (Navy, 2009) and Section 3.2.1.2 of the RD (ChaduxTt, 2010). The primary cover criterion as specified in the ROD is to minimize human exposure with the potentially contaminated soil beneath. The RD proposes a minimum 6-inch total thickness as the durable cover. The 6-inch total thickness from the RD will be maintained over all areas where new asphalt pavement surfacing is required. The newly constructed asphalt pavement surface will include a minimum 2-inch layer of AC paving as the surface course. Additional details on the existing conditions observed at the site and the reuse of the road base material in the remedy construction are provided in Sections 3 and 4 of this report.

Reuse of the road base material available at the site will reduce the amount of imported material necessary to meet the requirements of the ROD and the RD without compromising the integrity or protectiveness of the final completed remedy.

2.2 Project Organization

The project organization includes Navy representatives and the prime contractor and its subcontractors. The responsibilities of each organization are discussed below and an organizational chart that identifies the relationships between key project personnel can be found in Appendices B, and in the APP/SSHP.

Key Navy personnel include the Lead Remedial Project Manager (LRPM), the Remedial Project Manager (RPM), the Resident Officer in Charge of Construction (ROICC), the Caretaker Site Office (CSO), and the Contracting Officer (KO). The RPM will provide oversight of technical issues for the project and interface with the Base Realignment and Closure Cleanup Team, community representatives, and the prime contractor to ensure that the project objectives are met. The ROICC will coordinate remedial construction activities, including reviewing contractor submittals, verifying personnel qualifications, and overseeing construction. The CSO will oversee and coordinate site access and resolve site logistics issues. The KO will administer and verify compliance with the contract. In addition, ChaduxTt, the RD contractor, may be involved in technical review and oversight during RA implementation.

The prime contractor for this project will be responsible for all construction activities. The prime contractor will execute the remedial construction and procure additional subcontractors needed for implementation of the RA. The prime contractor will oversee a variety of subcontractors that offer specialized services, including surveying, trucking, geotechnical testing, analytical testing, air monitoring, grading and paving. All construction work performed by the prime contractor and its subcontractors will be overseen by a California-licensed Professional Engineer.

Key personnel include the Project Manager, Corporate Health and Safety Manager, Construction Manager, Project Superintendent, Chemical Data Quality Control (QC) Manager, Contractor Quality Control (CQC) Manager, Site Safety and Health Officer (SSHO), and Technical Field Team Lead. The Project Manager will oversee the entire project on behalf of the prime contractor and will work the Navy RPM to resolve technical issues that arise during the RA. The other key personnel will support the Project Manager, as needed, to implement the RA in accordance with the project plans and specifications (ChaduxTt 2010).

2.3 Project Schedule

The project schedule and sequence for completion of the project are provided on Figure 7. As detailed in the project schedule, durable cover construction is expected to begin in January 2013 and will continue through June 2013.

3. Existing Site Conditions

The contractor conducted field visits to assess the surface conditions of the site between June 18 and June 22, 2012. Inspections included assessments of the site buildings' foundations and the areas of the site between the buildings. The following summarizes the findings of the assessment (Appendix G).

Previous site reporting and research along with the field observations indicate that approximately 35 percent of the site is covered with concrete building foundations. The building foundations were generally observed to be in good intact condition with minor areas requiring repairs to meet the durable cover requirements. False floors were observed in Buildings 411 and 363 and crawl spaces or gaps in the foundation were observed in Buildings 351, 420, 424, and D-A, all of which will require access closure to meet the durable cover requirements.

The remainder of the site, approximately 65 percent of the area, is the exterior portions of the site. To facilitate the inspections of these areas, the site was divided into approximately 200-foot by 200-foot gridded areas where the various surface and below-surface conditions within each grid were characterized. The characterization was based on manual removal of the top 6 inches of the surface material at up to four locations within each grid (a total of 95 locations) using hand tools (see Figure 4). The various material types, thicknesses, and conditions of the surface material were identified. The AC layer that covered Parcel G throughout its operational history was observed extensively over the site during the conditions assessment at varying depths underlying the upper layer of imported material.

The following conditions were observed over the site and outside of the buildings.

- AC pavement that meets the requirements of the durable cover with minor repair.
- Hardscape or monolithic features that meet the requirements of the durable cover such as concrete pads, concrete utility chases, and building aprons.

- Areas of imported road base material overlying the historical AC and overlying areas where prior RAs for the removal of utilities were conducted, as documented in the Removal Action Completion Reports on the Remedy for Radionuclides and Soil Hotspot Removal (RACR; Tetra Tech 2011; ERRG 2011).Clean crushed drain rock overlying the four north south drainage swales is identified as suitable for incorporation into the durable cover in the RACR of the Remedy for Radionuclides (Tetra Tech 2011).

- Areas of exposed soil without the underlying historical AC pavement.

- In addition, various soil stockpiles from previous components of the RA at the site were observed throughout Parcel G. The Navy has removed these stockpiles from Parcel G in accordance with the document entitled: *Final RACR for Soil Hotspot Locations at Parcels B, D-1, and G and Soil Stockpiles at Parcels D-1 and G* (ERRG, 2011).

Imported road base material was observed over the surface and in varying thickness across much of the site. According to the RACR (RACR; Tetra Tech 2011), following the removal of subsurface storm drain and sewer utilities across Parcel G, the bottom portion of the trenches "were backfilled with the excavated trench material, soil imported from the Mills Peninsula Hospital construction project, and then capped with imported road base material". The road base material was placed over the excavation and across the area surrounding the trenches to provide a continuous level surface condition. Similarly, the RACR for Soil Hotspot Removal (ERRG, 2011) noted that excavations were backfilled with clean imported soil and were covered in paved areas with 6 inches of Class II AB.

The presence and extensive application of the road base material was confirmed through correspondence with Tetra Tech, contractor for the previous TCRA conducted on Parcel G. It was observed and supported by Tetra Tech that excess imported road base material that was not used to cap the backfilled trenches was spread over the adjacent AC pavement, leveled to uniform grade and thickness and compacted. Field observations and measurements confirmed that the thickness of AB material over existing AC varies by street but is generally uniform for each individual street (see Pre-Construction Photo Log in Appendix G and Figure 4). In areas where the import road base was observed, the thicknesses were generally less than 4 inches.

The following sections discuss the procedures for surface preparation and durable cover installation based on the current site conditions. Previous site reporting along

with the aforementioned data collected for this project indicates that approximately 35 percent of the Site is covered with existing concrete building foundations (when repaired meet the requirements of the durable cover) and 65 percent of the Site is exterior areas that had previously been paved. Given the large percentage of the site that is covered by concrete building foundations or existing AC that currently meet the durable cover requirements with minor repairs, discussions regarding the durable cover sections are centered primarily on the preparation and use of existing AC pavement.

4. Existing Surface Conditions and Proposed Approach

The following sections discuss the main types of surface conditions that were encountered at the site and the proposed approach for constructing the durable cover for each type of existing surface condition based on the previously discussed research and field observations. Details related to the construction of the durable cover may be found in Section 5.2.2.

4.1 Existing AC Pavement

Historically, all exterior surfaces of Parcel G, except the southeast corner, were paved with AC over compacted AB (see Figure 3). Weathering and subsequent remedial actions have damaged portions of the AC cover. Based on the surface condition survey, some portions of the historical AC cover remain intact at the ground surface with minor cracking (less than 0.25 inches wide). The areas of the site where these conditions exist are the open areas between the existing buildings and along the portions of the roads that extend north and south that have not been subject to the removal of the subsurface storm drains and sewer pipes. Many of these areas meet the requirements of the durable cover with repair, application of seal coat, or through incorporation of a new AB and 2-inch minimum AC sections to allow the areas to meet the requirements of the durable cover.

4.2 Existing Clean Crushed Drain Rock Material in Swales

Portions of Parcel G are covered with clean crushed drain rock, particularly in and adjacent to the existing drainage swales.

Each of the four drainage channels where existing clean crushed drain rock is present on the ground surface will be stripped of vegetation, minimally graded, and covered with a new 2-inch thick section of AC. The total 6-inch separation between the AC surface and the underlying impacted soil will be provided by the existing 4-inch

minimum clean crushed drain rock (as observed in the field) and 2 inches of AC. The new 2-inch AC section will be placed in accordance with Section 5 of this RAWP.

4.3 Existing Imported Road Base Material

As previously discussed, much of the Parcel G roadway areas between the buildings are covered with imported road base material. The existing road base material was observed to be between 2 and 4 inches thick where present. The surface of these areas will receive a minimum of 2 to 4 inches of imported AB. The amount of imported AB will be dependent on the thickness of the existing AB and grading requirements, but a minimum thickness of 4 inches will be achieved. A minimum of 2 inches of AC will be applied in order to establish a minimum of 6 inches of separation between the finish surface and underlying impacted soils.

In instances where the surface road base material is underlain by existing AC or other hardscape (i.e., railroad tracks, concrete, utility chases), the AB section may be reduced from 4 inches to 2 inches since imported materials already overlay an existing hardscape section. This approach will maximize the efficient use of existing suitable non-impacted materials on the site that are known to have been imported and are underlain with existing AC pavement based on research and field observations, thereby reducing the amount of imported AB needed for the project.

Where imported road base material was not observed to be underlain by existing AC (Morrell Street and Cochrane Street), 4 inches minimum of AB and 2 inches of AC will be applied in order to establish the 6-inch minimum durable cover.

Where imported road base material is underlain by railroad tracks, utility chases, utility appurtenances, or existing AC, 2 to 4 inches of AB leveling course and 2 inches of AC will be applied for a total durable cover of over 6 inches. This total thickness will be composed of: (1) the existing historical AC, (2) the overlying 2 to 4 inches of existing imported road base, (3) the addition of a minimum 2 inches of imported AB, and (4) the application of a minimum 2 inches of AC.

4.4 Existing Exposed Soil

Localized areas characterized as having exposed soil, such as the southeast corner of Parcel G, will be cleared of vegetation during site preparation activities and will receive a durable cover consisting of a minimum of 4 inches of imported AB and 2 inches of

AC. The following procedures will be employed to install the durable cover in areas where soil is exposed at the ground surface:

1. The existing ground surface will be compacted to prevent differential settlement from occurring after completion of the durable cover. Compaction testing will be conducted before application of the AB course material per Section 5 of this RAWP.

    a. The existing grade will be utilized as much as possible to create the foundation for the new AB and AC section as part of the durable cover. For areas where the elevation of the existing grade is too high, grading will be completed to allow for installation of the AB and AC course to match target grade elevation. Soil that is excavated to establish grade will be incorporated into the support zone 2 (see Figure 8) and ultimately covered with a 4 inches of AB and 2 inches of AC for a 6-inch durable cover section.

    b. If the existing grade is too high such that the durable cover would rise above existing doorway thresholds, the ground surface will be graded so the completed cover does not block access to the buildings.

2. Installation of the pavement section will be completed in accordance with Section 5 of this RAWP.

4.5 Existing Exterior Concrete/Hardscape

Some exterior surfaces at the site are concrete slabs that cover the ground surface and thus function as a durable cover. Field observations have noted that existing exterior concrete slabs are in overall good condition with some areas requiring minor repairs. Existing concrete slabs that are in good condition with cracks that are less than a ¼ inch meet the requirements of the durable cover. Slabs with cracks greater than ¼ inch will be repaired as follows.

1. Exterior slab cracks larger than ¼ inch will be filled with mortar (unreinforced Portland cement) and tamped at the surface into the surrounding foundation.

    a. If the cracks are observed to penetrate to the subgrade, the subgrade will be filled with clean imported fill prior to patching with mortar.

b. Cracks smaller than ¼ inch will be monitored as part of the post-construction Operation and Maintenance (O&M) program and repaired in the future if expansion is observed.

c. Crawl space access points for Buildings 351, 420, and 424 will be secured with galvanized wire mesh secured to the foundation concrete installed per Design Specifications Section 32 31 26, Security (ChaduxTt 2010).

2. Utility corridors, trenches, chases, or conduits that are exposed at the existing ground surface will be inspected for cracking and damage.

   a. Cracks greater than ¼ inch will be sealed with mortar.

   b. Following repair, the utility corridors, trenches, chases and conduits will either be covered by a layer of AC or incorporated into the surrounding durable cover depending on the grade requirements.

   c. The completed section of utility chases and exterior concrete that meets the requirement of the durable cover may have an asphalt seal coat applied for additional protection.

   d. Existing utility structures will be left in place and incorporated into the durable cover.

   e. Flush mounted monitoring wells and the concrete surface completion aprons across the site will be protected in place and modified to meet the final cover grade.

   f. AB will be reused on site or imported as needed to meet the grade requirements. Imported AB will meet Specifications Section 32 10 00 Part 2.2 (ChaduxTt, 2010) that specifies Class II AB, which will be certified by the AB supplier.

3. Grading and asphalt paving activities will be completed in accordance with the Dust Control Plan (DCP; Appendix D). All stockpiles will be covered and managed per the CERCLA Stormwater Plan (CERCLA SWP; Appendix E).

4.6 Existing Interior Concrete Building Foundations

The majority of the existing concrete on the site consists of building foundations and slabs. Field observations conducted by ARCADIS noted that the interior existing concrete is in good condition and will require generally minimal patching and repair to meet the conditions of the durable cover (Appendix G). Building foundations with cracks smaller than ¼ inch will be considered acceptable as durable cover. Building foundation cracks larger than ¼ inch will be considered acceptable once cracks are filled with mortar (unreinforced Portland cement) and troweled smooth at the surface. Cracks smaller than ¼ inch will be monitored as part of the post-construction O&M program and repaired in the future if expansion is observed.

Buildings 411, 363, 366, 351, and D-A may require patching and/or filling of foundation cracks, and previously cut or removed concrete. Refer to Section 5.2.2.8 for discussion related to securing existing crawl spaces below buildings.

5. Construction Activities

This section summarizes the construction activities associated with implementation of the RA at Parcel G and the construction of the various covers described in the previous sections. The RA includes the following work elements:

- Pre-Construction Activities

    1. RAWP and supporting plans preparation and approval
    2. Pre-construction meeting
    3. Permitting and access coordination
    4. Above ground and underground utility clearance
    5. Field observations, photo documentation, and site topographic survey
    6. Grading, Drainage, and Paving Plan preparation

- Construction Activities

    1. Mobilization and site preparation
    2. Temporary construction fence installation
    3. Durable cover installation
    4. AC and concrete cover repair
    5. Building foundation repair and documentation
    6. Dust control and monitoring

7. Air monitoring and analysis
8. Securing building access and crawl spaces and documentation
9. Installation of two survey monuments
10. Site cleanup and demobilization

- Post-Construction Activities

1. Completion inspections
2. Post-construction O&M
3. Final (as-built) site survey
4. RACR preparation

The following subsections describe the specific pre-construction, construction, and post-construction activities associated with this RA.

5.1 Pre-Construction Activities

5.1.1 Pre-Construction Conference and Meetings

Prior to starting the project, the contractor will host a pre-construction meeting that will be attended by the Navy LRPM, RPM, ROICC, CSO representative, KO, and contractor along with the entire construction management team (including major subcontractors). During the meeting, the contractor will establish with the CSO representative and ROICC the final locations or alignments for construction laydown areas, equipment staging areas, and haul routes. It is possible that through the course of the project these areas and routes may be modified. The contractor will inform the representatives of the Navy of the modifications as they become necessary. The prime contractor will also review the project Accident Prevention Plan (APP) and Site Safety and Health Plan (SSHP; ARCADIS 2012), CQC Plan (Appendix B), and Grading, Drainage, and Paving Plan (Appendix A), and discuss their implementation.

Prior to mobilization, the prime contractor will host a subcontractor and vendor kickoff meeting to discuss communication and coordination logistics; project goals and quality standards; and safety requirements, protocols, and procedures. The Navy ROICC and CSO will also attend the meeting.

5.1.2 Permitting

The RA at Parcel G is a Comprehensive Environmental Response, Compensation, and Liability Act (CERCLA) response action; therefore, per the National Contingency Plan NCP, the Navy is exempt from administrative permit requirements, such as permit application processes and fees. However, the Navy will fulfill the substantive provisions of all Applicable or Relevant and Appropriate Requirements (ARARs) specified in the ROD (Navy 2009).

5.1.3 Above Ground and Underground Utility Clearance

Underground Service Alert North will be contacted at least 72 hours prior to initiating subsurface soil activities to locate potential underground utilities in the areas where soil grading may occur.

Any utility lines encountered will be assumed to be active, unless specifically determined to be inactive through consultation with the subject utility company and with the CSO representative, ROICC, and RPM

Active underground and aboveground utilities will be marked and flagged clearly and protected in place. The majority of the work described in this RAWP will be conducted at the existing ground surface and above with very little subsurface excavation. Subsurface intrusion will be limited to activates associated with site grading and are not anticipated to extend to appreciable depths below the existing grade. Given the shallow depth of work required to implement this RA, it is not anticipated that subsurface utilities will be encountered. Inactive or unused utility structures or other monolithic structures will be left in place and incorporated into the durable cover. It will be confirmed that the existing underground water lines, except those on the perimeter of Parcel G, that service active fire hydrants, were either abandoned or removed.

5.1.4 Field Observations, Photo Documentation, and Site Topographic Survey

Prior to the commencement of construction, field visits were conducted to identify the current condition of the Parcel G surface as referenced in Sections 3 and 4. As part of field observations, a photographic log of the existing conditions was prepared to document the pre-construction condition and facilitate the approval process for the completed durable cover (see Photographic Log in Appendix G). This photographic log demonstrates the main types of existing conditions that have guided the proposed durable cover implementation approach.

Photos will be taken of each building foundation, crawl space, and opening to the soil beneath the buildings that is required to be secured in order to satisfy the requirements of the durable cover to minimize access to the underlying soil at the site. Similarly, photos will be taken of cracks smaller than ¼ inch in width to be monitored in addition to the completed repairs and access closures for documentation purposes. These photos will be used not only to document the repair work performed, but will also be used as part of the O&M Plan, to be inspected on a quarterly basis to ensure they remain a functioning part of the durable cover.

In addition, a pre-construction survey was performed to document existing site topographic conditions, and aid in the development of the grading and paving plans to ensure adequate drainage. The pre-construction surveying was performed by a California-licensed land surveyor in June 2012 to establish ground control throughout the project area and to identify the planned locations and elevations of key features, such as the target elevations of the AC. The pre-construction survey included the creation of a scaled map detailing existing site conditions, including topography, property boundaries, drainage features, utilities, and monitoring wells that was the basis for the Grading, Paving and Drainage Plans included as Appendix A.

Pre-construction surveying was conducted to an accuracy of 0.1 foot horizontally and 0.01 foot vertically. All horizontal coordinates will be based on the following surveying control datum: (basis of bearings) North American Datum (NAD) 27 Zone-III (Hunters Point West 1 PID HT0613) U.S. Survey Feet (USFT). All vertical elevations will be based on the following surveying control datum: (benchmark) National Geodetic Vertical Datum (NGVD) 29 (corrected).

5.1.5 Grading, Drainage, and Paving Plan Preparation

A construction level Grading, Drainage, and Paving Plan (Appendix A) has been prepared using the findings from field observations and the existing conditions topographic survey. The Grading, Drainage, and Paving Plan will govern the construction of the durable cover in conjunction with this RAWP and will provide for a detailed, construction level implementation plan for constructing the durable cover. The plan will create site drainage in accordance with the remedial design and will provide further definition of the construction aspects (surface condition, reuse, grading, aggregate base requirements and paving) of the project (see Section 5.2). The Grading, Drainage, and Paving Plan will address durable cover installation with respect to various constraints and surface conditions that exist on the site.

5.2 Construction Activities

This section summarizes the construction activities to be performed during the RA, including mobilization, site preparation, construction of the durable cover, and demobilization. All field personnel, including subcontractors, will maintain a clean worksite throughout the construction period to prevent injuries and accidents in accordance with the APP and SSHP (ARCADIS, 2012).

5.2.1 Mobilization and Site Preparation

Mobilization and site preparation activities will be performed prior to the start of the RA and include setup of site security, equipment mobilization, traffic routing and control, setup of temporary utilities, surveying, installation of perimeter fence, delineation of work and support zones, and establishment of environmental controls. These activities are discussed below.

5.2.1.1 Site Access, Security, and Working Hours

Prior to mobilization, the prime contractor will request HPNS security passes for all anticipated site workers and visitors from the CSO who will contact the SFRA. All field personnel, including subcontractors, will check in daily before starting work at the guard station when entering HPNS.

Regular working hours will fall between 7:00 AM and 5:00 PM Monday through Saturday, excluding federal holidays. If work outside of regular working hours or on federal holidays is required, the CSO representative, ROICC, and RPM will be consulted for approval. To minimize disruption to the community, no heavy equipment or trucks will be permitted to operate, idle, or make deliveries before 8:00 AM and after 4:30 PM to minimize traffic congestion in the neighborhood unless approved by the KO.

Air sampling stations will be installed at the site and positioned upwind and downwind of Parcel G and will be relocated based on the current prevailing wind direction in accordance with the project Dust Control Plan (Appendix D).

A temporary construction perimeter fence will be placed around Parcel G and will remain in place during construction activities to prevent unauthorized access to the site (Figure 8). Field personnel will inspect the site daily to verify the integrity of the fence.

The gates will be secured during non-work hours. During work hours, site access will be monitored and the gates will remain closed to prevent unauthorized access.

During mobilization, a project identification sign will be erected at a location indicated by the ROICC. The sign will be constructed in accordance with the project sign details included in the contract specifications. The project sign will be maintained throughout the life of the RA and removed upon completion of the RA. All project and safety signs will be erected in accordance with Naval Engineering Training and Operating Procedure and Standard #6 Construction Signage.

All field personnel, including subcontractors, will keep within the limits of the support areas, work area, and avenues of ingress and egress. They will not enter active construction areas until required to do so or until cleared for entry.

5.2.1.2 Equipment Mobilization

Equipment and materials will be mobilized to Parcel G as they are needed for performance of the RA. The following equipment will be mobilized to the parcels as needed:

- Field office
- Storage box
- Support equipment
- Air monitoring equipment
- Portable toilets and hand wash stations
- Heavy equipment (e.g., grading, excavation, and paving related equipment)
- Traffic control devices (e.g., flags, barricades, traffic delineators, and signs)
- Personal protective equipment (PPE)
- Decontamination supplies
- Spill response kits

- Hand tools
- Safety equipment (e.g., eyewash stations, first-aid kits, photoionization detector, and dust monitors)
- Sampling and testing equipment (e.g., sampling supplies, testing devices, etc.)

5.2.1.3 Traffic Control

Traffic volume and circulation at HPNS fall under the purview of the ROICC and CSO. On-site and off-site roads will be used for mobilization and demobilization of heavy equipment and transportation of materials and equipment to and from the site. The locations of the employee parking area, the equipment laydown area, major ingress and egress routes for this project and proposed traffic routes are discussed in more detail in the Traffic Control Plan (TCP; Appendix C). Traffic routes and controls were selected to maximize safety and convenience of motorists, pedestrians, and workers during construction activities associated with implementation of the RA.

The project team will work closely with the ROICC and CSO representative to coordinate all construction activities that may generate traffic to avoid conflicts with other activities on the base. Traffic routes will be reviewed and modified, as necessary, throughout the period of construction. If a traffic route must be changed during construction, the ROICC, CSO representative, and RPM will be consulted prior to implementation of the reroute.

Traffic controls will be used to efficiently complete work activities in a safe working environment, while minimizing the impact on normal traffic flow. Traffic controls may include, but are not limited to:

- Loading and transporting materials, equipment, waste, or debris during times when other contractors are not importing or exporting materials to minimize facility traffic;
- Encouraging workers to car pool; and
- Using traffic cones, flags, signs, and other measures to facilitate loading and unloading of materials, as necessary.

5.2.1.4 Temporary Utilities

Uninterrupted access to water, primarily for dust control and soil moisture conditioning, will be required throughout the duration of the project. Depending on use by other contractors at HPNS, the prime contractor will connect to one of the two fire hydrants near Parcel G for water supply (Figure 8). Potable water will be acquired from off-site sources (i.e., bottled water). Electrical power needs will be satisfied either through fuel powered generators or temporary power service provided by Pacific Gas & Electric (PG&E).

5.2.1.5 Surveying

Site surveying will be conducted at various times as construction progresses. Surveying during construction of the durable cover will be performed to maintain elevation control throughout the project area. The construction progress and final completion topographic surveys will be performed by a California-licensed land surveyor. The initial site survey and a photographic log will establish the conditions prior to construction and be used to measure the progress of the RA throughout Parcel G remedy implementation and will assist the ROICC and RD contractor in evaluating the durable cover RA as it is constructed.

As discussed in Section 5.1.4, an initial topographic survey was conducted between June 18, 2012 and June 21, 2012 to create a detailed map of the existing surface within Parcel G. Throughout and following restoration of pavement, grade checking and as-built surveys will be performed to ensure that proposed grades are being maintained. Grade checking will be performed throughout the construction process, to confirm target elevations for placement of the durable cover.

Construction surveying will be conducted to an accuracy of 0.1 foot horizontally and 0.01 foot vertically. All horizontal coordinates will be based on the following surveying control datum: (basis of bearings) NAD 27 Zone-III (Hunters Point West 1 PID HT0613) USFT. All vertical elevations will be based on the following surveying control datum: (benchmark) NGVD 29 (corrected).

5.2.1.6 Delineation of Work and Support Zones

To control unauthorized access to the work areas, access to Parcel G will be restricted for the duration of the construction project. All precautions, practices, and Level D PPE to ensure health and safety of workers and site visitors are specified in the APP and SSHP (ARCADIS 2012).

Two support zones (1 and 2) will be set up for this RA (Figure 8) the locations of the support zones may be modified over the course of the project to accommodate access. Support Zone 1 will be located in the lot between Buildings D-A and 411 and will consist of:

- A field office;
- A lockable storage box for small equipment, materials, and samples;
- Sanitary facilities (i.e. portable restroom and sink); and
- A protected employee parking area isolated from construction vehicles.

The temporary field office will be used to maintain all construction records, including redlined design drawings, contractor production, and CQC and health and safety documentation, throughout the period of construction. The field office will also be used to charge instruments and as the primary gathering location for project meetings. If permitted by the Navy and deemed adequately secure, Building 439 may serve as the field office.

Support Zone 2 will be used as a staging area for heavy equipment and materials. Dumpsters for small construction waste and recycling will also be located in Support Zone 2. Additional sanitary facilities will be located in this area. Support Zone 2 will be used for storage of clean imported AB and debris or soil to be removed or reused on site. All stockpiled material will be managed in accordance with the SWPPP (Appendix E).

5.2.1.7 Establishment of Environmental Controls

During mobilization, environmental controls, including storm water best management practices (BMPs), will be established in accordance with the project SWPPP (Appendix E). Environmental controls will be maintained throughout the duration of the project. All equipment and vehicles will be cleaned by dry methods within the contamination reduction zones (both of which may be used by all equipment and vehicles) shown on Figure 8 prior to leaving the work zone to prevent the trackout of soil. All site access points will have rumble strips to prevent transport of site soils to outside the Parcel G boundary.

Perimeter dust monitoring stations, including stationary high-volume sampling and real-time dust monitoring, will be set up during mobilization and operated throughout the entire period of construction.

In accordance with the base-wide air monitoring plan, stationary high-volume sampling will include upwind and downwind monitoring for the following analytes: total suspended particulates (TSP), arsenic, lead, manganese, asbestos, and particulate matter less than 10 microns in diameter (PM10), as described in the DCP (Appendix D). Monitoring data will be compared to the threshold concentration levels presented in Table 1 of the DCP (Appendix D). If the mass concentration of particulates is less than the action level defined for the project, then the dust control measures in place are adequate. If an exceedance of the threshold concentrations is detected, the upwind and downwind results will be compared to determine if the exceedance was caused by on-site activities. If the mass concentration of particulates is at or above the action level defined for the project, the SSHO will immediately implement corrective actions to enhance the dust control measures being implemented. Dust control measures and corrective methods are described and shown in the DCP (Appendix D).

Engineering controls, such as selection of PPE, are described in the APP (ARCADIS, 2012).

Personal air monitoring will be conducted to assess worker exposure to site COCs for each type of work, as described in the APP (ARCADIS 2012) and summarized in the DCP (Appendix D). Samples will be collected throughout the workday (8 hours or more) and will be analyzed for total dust COCs per the DCP within 24 hours. Personal air monitoring shall continue until COCs and other chemical hazards are less than the AL for a minimum of 1 day of work. Personal air monitoring will be completed to assess worker exposure to site COCs and to determine the appropriate level of PPE protection. Exposure assessments to be completed as part of this RA are further discussed in the APP (ARCADIS 2012).

It is expected that modified level D PPE will be worn by all site workers. PPE upgrade action levels and procedures will be described in the APP. Engineering controls, such as dust suppression, may be prescribed by the SSHO to achieve the site action levels and regulatory threshold limits. If on-site activities are found to be the cause of an exceedance, the SSHO will immediately implement corrective actions to enhance the dust control measures being implemented. Dust control methods are described in the DCP (Appendix D). These include, but are not limited to, applying water and/or soil

stabilizers, reducing driving speeds on unpaved roads, and modifying the equipment and/or approach used to perform the work activities.

Real-time air monitoring will be conducted in each active work zone, as well as upwind and downwind of the work zone, using a real-time particulate monitor. Real-time air monitoring allows for the measurement of mass concentrations of particulates or dust.

5.2.1.8 Site Preparation - Clearing & Grubbing

The existing stock piles of soil, concrete, and brick currently located at Parcel G will be removed by other contractors prior to the commencement of this RA. However, existing debris such as traffic bollards, loose debris, debris inside the buildings and structures, large rocks, loose concrete and other materials will remain on the site. These materials may need to be relocated prior to installation of the durable cover in various locations as needed to facilitate the construction of the durable cover, primarily to locations of existing concrete that may already qualify as durable cover. The following list summarizes the expected site preparation tasks:

1. Vegetation will be cleared and native soil or existing AB surface will be scarified as needed to establish the subgrade for construction of the durable cover.

2. Vegetation in the four drainage channels will be cleared to make the areas suitable for grading and receiving AB and AC as needed to complete the durable cover.

3. Portions of the site with varying existing paving materials (i.e., intact AC with overlying AB layers of varying thickness) will be prepared as needed to support to final constructed durable cover.

4. Areas of soil with no existing AC or AB will be prepared for the durable cover section.

5. Areas of existing AC that meet the requirements of the durable cover will be repaired as needed and prepared for application of a surface sealing coat.

Prior to the commencement of the RA, the excess material that is present inside the buildings will be consolidated and stored at an area within the building that is acceptable to the Navy and meets the criteria of the durable cover. The perimeter of the storage area will be inspected for cracking as part of the O&M requirements for the durable cover. If the inspections indicate that the perimeter area is not meeting the

criteria of the durable cover, the material may be moved to allow for further visual inspection of the durable cover.

5.2.2 Durable Cover Installation

This subsection, in conjunction with the Grading, Drainage, and Paving Plan (Appendix A) provides the details regarding the installation of the AC durable cover under various existing surface conditions present at the site and the overall phasing of its implementation. Approximately 35 percent of the site is covered by existing concrete building foundations, and a majority of the remaining exterior surfaces are covered with AC or concrete pavement with varying degrees of damage. Localized portions of the site are comprised of soil with no remnants of previous asphalt pavement materials or existing hardscape features (e.g., concrete pads, utility chases, etc.). Existing concrete building foundations will be repaired where existing cracks require patching to meet the durable cover criteria and all existing crawl space access points and false floors will be secured as discussed in Section 5.2.2.8.

5.2.2.1 Overall Durable Cover Construction

The durable cover will be constructed to prevent exposure to the subsurface soil at Parcel G. The durable cover will meet the requirements of the ROD to minimize human exposure with the underlying soil and will be able to withstand the applied forces that could potentially degrade the cover. Existing AC surfaces and imported road base material present at the site will be reused to the extent possible in the construction of the durable cover. The following describes the primary durable cover construction elements.

After site preparation activities are complete, the prime contractor will implement the Grading, Drainage, and Paving Plan (Appendix A) to establish elevation controls across the site. The Grading, Drainage, and Paving Plan will incorporate existing fixed grade constraints such as building door thresholds, boundary conditions, and features such as existing hardscape (e.g., concrete utility chases, as well as the large exterior concrete slabs, railroad tracks and other intact site features).

Equipment that may be used for construction of the durable cover includes dump trucks for hauling AB; front-end loaders, motor graders, backhoes, Compacting equipment, asphalt pavers, and steel drum rollers.

The following sections describe the durable cover construction specific to the existing surface conditions observed.

Existing AB Overlying the Historical AC

Areas within the north-south roadways consist of an existing underlying AC surface area overlain by approximately 2 to 4 inches of imported road base material as described in the RACRs for Radionuclides and Soil Hotspot Removal (RACR; Tetra Tech 2011; ERRG 2011) and observed during the condition assessment. Based on observations made at the site in June 2012, this imported road base material has been highly compacted. This AB overlies the asphalt pavement historically covering the entire site. In these areas where 2 to 6 inches of imported road base material currently exists, the durable cover will be achieved by placing an additional leveling course of imported AB of between 2 and 4 inches to achieve the necessary grade elevations and meet the drainage and durable cover requirements. The overall thickness of the AB layer will be a minimum of 4 inches. This surface will be covered with a minimum 2-inch thick layer of AC (see Figures 6a and 6b and Figure 9). The final total thickness of the durable cover including the existing AB, imported AB, and the AC will be a minimum of 6 inches.

Existing Exposed AC in Good Condition

The portions of the site in the north-south roadways composed of existing exposed AC surfaces with no overlying AB cover will remain in place. The AC will be repaired and a sealing pavement patching may be applied as needed before an asphalt seal coat is applied (see Figures 9 though 13). Where existing AC in good condition is adjacent to new AC, the perimeter of the existing AC in good condition shall be saw cut to ensure a smooth joint. In such situations, the existing AC to remain will be cold ground a width of 12 inches and overlaid with the new AC to provide a cohesive joint. AC in good condition adjacent to new AC overlay does not require saw cutting.

Existing Exposed AC in Poor Condition

Areas of existing exposed AC that cannot meet the durable cover requirements with simple crack repairs and patching may be removed. If grades permit, however, the area may be designated for AC overlay repair where additional AC layers would be added over the existing surface. In instances of AC overlay, a pavement fabric will be applied to the existing AC surface before placement of the new AC (see Figures 6a and 6b).

1. Where the existing AC surface is too high and does not allow for proper transition with the proposed top of AB grade from the adjacent areas, it may be removed and replaced as needed to achieve the necessary grade in accordance with the Grading, Drainage, and Paving Plan (Appendix A). Under this condition the subgrade surface would be prepared and 4 inches of imported AB and 2 inches of AC would be used to create the durable cover.

2. In cases where the existing AC surface is too low, a leveling course of AB or additional layer of AC will be added to bring the grade up in order to meet with the adjacent AC surface elevation.

3. AC that is to be demolished will be jack-hammered and graded in the southeast corner of Parcel G prior to that area receiving 2 inches of AC on 4 inches of AB.

Existing Exposed Soil

Where soil is encountered, the surface these areas will be graded to establish proper subgrade as appropriate to accommodate a minimum of 4 inches of imported AB and a minimum of 2 inches of AC (see Figures 6a and 6b).

1. Excess soils generated as part of the durable cover construction will be placed in the southeast quadrant in the roughly 400 by 400 foot square area south of Building 351, in accordance with the grades shown on the Grading, Drainage, and Paving Plan (Figure 14; Appendix A).

2. Once the subgrade has been prepared, import AB will be placed and prepared to appropriate elevations for receiving the 2 inch AC pavement section.

Existing Drainage Swales (Crushed Drain Rock)

AB berms adjacent to and within the existing drainage swales will be graded as necessary to meet the proposed top of AB grades within the roadway to receive the 2-inch AC cover section over the swale and roadway (See Figure 9 through 13). Existing high density polyethylene culverts within the swales will be removed and the drain rock graded to conform with the rest of the swale. The paved surface will facilitate storm water flow from the roadway areas to the swales. Approximate flow capacities of the AC swales will vary in each swale from approximately 6.5 cubic feet per second at the upstream (north) end of the swale to approximately 25 cubic feet per second at the

downstream (south) end of the swale. Calculated flows are based on the typical proposed design for the swales with a longitudinal slope of 0.001 with a depth of 0.65 feet at the upstream end and 1.5 feet at the downstream end.

Exiting Groundwater Monitoring Wells and Other Monolithic Items

All existing groundwater monitoring wells will be documented and inspected prior to construction and protected during the construction of the cover (see Table 1 for a list of monitoring wells and Figure 8 for their locations). Monitoring wells will be repaired and elevated as necessary to meet the final cover grade (RD Specifications Section 33 24 13; ChaduxTt, 2010).

Other monolithic items over the site such as concrete pads, concrete building aprons, and utility features and chases will be incorporated into the final cover as practical and the area sloped appropriately to achieve positive drainage. Monolithic concrete items will be repaired in a similar manner to the building slabs whereby cracks greater than a quarter inch in width would be repaired per guidance in the Unified Facilities Criteria Section 3-270-03 using a multipurpose concrete repair grout. Voids in utility structures will be backed at an elevation equal to the bottom of adjacent concrete and filled with concrete. In areas with railroad tracks such as on Morrell Street, the AB leveling course will be placed over the railroad ties and adjacent to rails to prepare the surface for AC. New AC pavement will then be applied adjacent to both sides and between the rails which can then be leveled with a screed.

The final surface of the exterior portions of the site after construction will be a layer of AC extending over the entire site area incorporating the existing monitoring wells, monolithic items, and other surfaces that meet the cover durability requirements. The final asphalt layer will be a minimum of 2 inches, where newly constructed, or consist of the existing AC repaired as needed. All newly constructed AC will have an underlying minimum 4 inches of AB including the existing imported road base material found over the site and new imported material.

5.2.2.2 Existing Road Base Material and Subgrade Preparation

1. An established subgrade in areas of native soil shall be a minimum of 6 inches below proposed finish grade.

2. All AC, AB, and subgrade removal activities will be in accordance with the DCP (Appendix D) and temporary stockpiles (if necessary) will be managed per the SWPPP (Appendix E).

3. Existing subgrade material and AB will either be kept in place and incorporated into the durable cover section, if it is existing imported road base material, or sourced from temporary stockpiles deemed suitable for reuse or imported and hauled to each excavation location via dump truck.

4. Subgrade and AB materials will be installed per the Design Specifications Earthwork Section 31 00 00 (ChaduxTt 2010). Subgrade soil material will be placed to the design subgrade elevation (6 inches below design grade) and compacted to a minimum of 95 percent of the maximum dry density at +/- 3 percent of the optimum moisture content.

5.2.2.3 Aggregate Base Material Placement

1. Imported AB will consist of recycled 100 percent concrete or virgin aggregate that meets the requirements of the RD (ChaduxTt 2010) and California Department of Transportation (Caltrans) specification Class II AB consistent with project Specifications Section 32 10 00 Part 2.2.

2. AB will be placed over the native soil and existing AB material where present and compacted up to approximately 2 inches below proposed finished grade.

3. A smooth drum compactor will be used to compact the AB to 90 percent of the Modified Proctor compaction and create a smooth working surface over all AB material.

4. Grade checkers in coordination with the project surveyor to verify proper benchmark and survey control will confirm that the aggregate base has been installed in accordance with the design and that the AB surface has been installed to within 2 inches below proposed final grade to accommodate placement of AC using a laser level and rod.

5.2.2.4 Asphaltic Concrete Placement

1. AC will be placed on a smooth working surface of AB or directly on the existing AC or hardscape that has been prepared.

2. AC will be imported from a local hot mix plant to Parcel G via truck.

3. A paving machine direct loaded by AC trucks will apply a 2-inch section of AC over the prepared base material. The AC surface will be compacted with a smooth drum roller until the AC is 2 inches thick. The paving contractor will verify the thickness of each AC lift, which is typically placed 2 inches at a time, by observing and measuring the thickness at the edge of the lift.

4. AC mixing and installation will be per Design Specification Section 32 10 00, Bituminous Concrete Pavement (ChaduxTt 2010).

5.2.2.5 Asphalt Seal

The asphalt crack seal will be applied to areas of exposed AC surfaces that meet the requirements of the durable cover with repair. The seal is a blend of asphaltic emulsion mineral fibers and polymers formulated into a slurry to fill voids and cracks. Asphalt seals will be used to preserve and restore existing intact asphalt and create a continuous durable cover at the site.

1. Before applying asphalt seal to a location, the AC will be swept clean and power blown with compressed air (or pressure washed, if necessary).

2. Asphalt seal will be applied by a sealing machine and broom-finished manually.

3. The sealant materials will meet the requirements of Section 32 01 17.16 Sealing of Cracks and Potholes in Bituminous Pavements of the RD specifications (ChaduxTt 2010).

5.2.2.6 North - South Streets

Given the importance of the north-south streets to the overall design, drainage, and success of the project, particular emphasis has been placed on the durable cover in these areas. Figures 9 through 13 are cross sections that provide details regarding the durable cover installation approach for the four north and south streets at Parcel G. The small area of the site, within H Street and Hussey Street, where existing AB is planned to be reused, represents approximately 15 percent of the pavement portion of the durable cover. The areas outside of the north south roadways have many similarities and thus allow for use of typical sections and details in order to construct the durable cover requirements and facilitate positive drainage.

The durable cover for these streets will incorporate the existing materials and site features where appropriate. Specifically the existing railroad tracks and the concrete covered utility chases will be incorporated into the durable cover. A leveling course of at least 4 inches of imported AB in areas where native soil is identified will be placed to establish the grade condition that will allow for positive drainage toward the swales (see Figures 9 through13 and Appendix A).

The areas of existing AC that meet the requirements of the durable cover and the drainage requirements will be repaired as needed and covered with an asphalt seal coat. Areas that have existing AC will receive an overlay pavement reinforcing fabric and will be covered with new AC paved to meet the drainage requirements specified in the Grading, Drainage, and Paving Plan (Appendix A). The pavement reinforcing fabric may be omitted in cases where the existing AC is in a condition that does not require it in order to construct a durable over.

H Street, unlike the other North-South streets, is bisected by the Parcel G-Parcel E boundary along its length. To address this, the durable cover will terminate at an angle along the boundary to establish a smooth, durable edge of AC. If a durable cover is to be installed on Parcel E, this angled portion may be removed with grades of the possible Parcel E durable cover matching grades of the Parcel G durable cover. The 2 inches of AC of the Parcel G durable cover may be cold ground along an approximately 12-inch wide strip along the boundary in which new AC would be placed as part of the possible Parcel E durable cover paving operations. This procedure would create a durable pavement seam along the Parcel E-Parcel G boundary.

5.2.2.7 East-West Spaces between Buildings

Based on field observations, the majority of the areas between buildings on Parcel G are covered with AC or concrete pavement. These surfaces will be incorporated into the durable cover through repair or application of an additional AC layer. In the areas between the buildings where the surface conditions do not meet the requirements of the durable cover AB will be imported to establish grades for positive release of run-off to the adjacent swales and will be paved with 2 inches of AC (see Figures 6a, 6b, and Appendix A), The surfaces will be graded to allow for positive drainage toward the existing swales present on the site.

As required for grade control, surfaces covered with existing AC or concrete will receive a pavement reinforcing fabric and AC. In locations where the existing AC or concrete be in competent condition able to receive direct AC overlay in order to

construct the durable cover, the pavement reinforcing fabric may be omitted. In cases where the areas are covered with bare soil, a 4 inch thick interval of imported AB will be applied followed by a 2 inch thick interval of AC. The largest of these areas has been observed in the area south of Buildings 402 and 351. These areas will be designed and graded to accommodate spoils from site grading activities and covered with 2 inches of AC on 4 inches of AB as discussed above.

5.2.2.8 Building Foundation Repair and Securing Crawl Spaces

Cracks in existing building foundations larger than ¼ inch will be patched with cement mortar and left in place. Cracks smaller than ¼ inch will be monitored as part of the post-construction O&M at the site. Holes and damaged cavities in the existing concrete slab will be patched with mortar. Large existing concrete-lined pits will be left in place once concrete repairs are complete to maintain a barrier from the underlying soil and the buildings will be secured.

In limited cases where access into existing crawl spaces is present within Buildings 351, 351A, 450, and 424, they will be secured with galvanized woven wire mesh with maximum 1-inch square openings secured to the foundation concrete installed per Design Specifications Section 32 31 26, Security (ChaduxTt 2010). The wire mesh will prevent humans from accessing lower portions of building foundations where contact with native soil may be possible. Existing concrete pits were found to be in sound structural condition during field observation and will be left in place and repaired as needed in order to meet the conditions for the durable cover.

In addition to securing the buildings from access to the interior and crawl spaces, existing false floors of large steel grates with 1-inch openings that were observed to be at least 18 inches above the exposed soil, such as those found in Building 411 (Photographic Log in Appendix G), will be left in place. Large gaps in the floors that were observed will be covered with 1-inch steel plates overlapping the gaps and welded to the existing steel grates to minimize access and exposure to the underlying soil.

5.2.2.9 Drainage Improvements

Pavement restoration and subgrade preparation will be conducted in a manner that improves site drainage and directs runoff to the existing swales that run through Parcel G as specified in the Grading, Drainage, and Paving Plan (Appendix A). This improvement will be achieved by establishing proper pavement grades and slopes that will allow for positive drainage away from buildings and into the swales. The grade

within the drainage channels will be improved as needed to achieve positive drainage and prevent accumulation of storm water. The northern portion of Parcel G will be graded to receive sheet flow run-off from Parcel UC-1 and divert it to the upstream ends of the various swales on Parcel G.

During field visits, it was observed that the existing drainage swales terminate prior to reaching the northerly stubouts of the existing receiving channel immediately south of the southern boundary of Parcel G. To address this and maintain continuity of drainage, a proposed 24-inch corrugated metal pipe culvert will be placed at a minimum slope of 2 percent at the downstream end of each swale to collect and convey flow to the existing stubouts of the receiving channel while simultaneously maintaining vehicular access along all of Manseau Street. The top of pipe will be set under a minimum of 3 feet of cover and the flowline will be protected with riprap on its upstream and downstream ends. Because the existing rock-lined channel does not extend to H Street, a large catch basin will be installed at the base of the H Street swale that will collect flow and convey it to the channel via a new pipe and manhole (see Figures 5 and 8 and Appendix A).

To address possible ponding on the east edge of Parcel E, a minor swale feature will be constructed to collect runoff from Parcel E at the parcel boundary and convey it to a new small catch basin. The flow will be conveyed underneath H Street via a pipe to a new large catch basin feature where it will continue to the existing rock-lined channel in the same manner as flow from H Street.

5.2.3 Site Cleanup and Demobilization

A final site cleanup will need to be performed after construction and demobilization from the site are completed. All materials and rubbish from construction activities will be removed; however, existing garbage debris piles present prior to commencement of the RA will be left on site as indicated in Section 5.2.1.8. Upon finishing site cleanup and completing a site inspection with the RPM, CSO representative, and ROICC, all equipment, personnel, facilities, temporary fencing, and equipment will be demobilized from the worksite in an orderly manner.

5.3 Post-Construction Activities

5.3.1 Completion Inspections

Completion inspections will include a Punch-Out Inspection, a Pre-Final Inspection, and a Final Acceptance Inspection. The inspections will be performed in accordance with the CQC Plan (Appendix B) and as described below.

Existing garbage debris piles that may be placed on existing concrete slabs during the durable cover installation will be shifted as necessary to expose completed durable cover spaces for photographic documentation of the completed condition to be submitted as part of the completion inspection. Existing garbage debris piles will ultimately be positioned on approved completed durable cover spaces to allow for documentation for inspection of other portions of the site.

The CQC Manager, or his representative, will perform the Punch-Out Inspection near completion of the RA. The CQC Manager, or his representative, will develop the punch list of items that do not conform to the approved drawings and plans and specifications or submittals. The punch list will include any items remaining on the rework items list that have not been corrected. A copy of the punch list will be provided to the RPM, ROICC, and KO. The CQC Manager, or his representative, will perform follow-up inspections to confirm that all deficiencies have been corrected. When inspections are completed, the CQC Manager, or his representative, will notify the RPM, ROICC, and KO that the RA is ready for their inspection.

The LRPM, RPM, ROICC, and KO will perform the Pre-Final Inspection to verify that the RA has been constructed satisfactorily. A pre-final punch list may be developed as a result of this inspection. The CQC Manager, or his representative, will ensure that all items on this list are corrected in a timely manner and prior to notification to the Navy that a final inspection can be scheduled. The LRPM, RPM, ROICC, and KO will be notified when the pre-final punch list items and any other rework items have been completed, along with all remaining work performed under the contract. Effort will be made to schedule the Pre-final Inspection to follow a rain event in order to observe the drainage performance of the newly constructed durable cover.

The Final Acceptance Inspection will be scheduled by the LRPM, RPM, ROICC, and KO based on the results of the Pre-Final Inspection. At that time, the RPM will invite regulatory agency representatives to attend the Final Acceptance Inspection.

5.3.2 As-Built Survey

As-built surveying will be performed by a California-licensed land surveyor to document actual installation locations and elevations of key features. The results of the as-built survey will be used to generate record as-built drawings. The as-built survey will be conducted to an accuracy of 0.1 foot horizontally and 0.01 foot vertically. All horizontal coordinates will be based on the following surveying control datum: (basis of bearings) NAD 27 Zone-III (Hunters Point West 1 PID HT0613) USFT. All vertical elevations will be based on the following surveying control datum: (benchmark) NGVD 29 (corrected).

Two permanent survey monuments will be installed on the final cover (Figure 5). Surveyors will record monument locations after placement. Monuments will be protected by bollards. The final elevation will be used for monitoring movement of the cover during the post-closure period. The prime contractor will conduct O&M of the remedy for the first half year following completion of the remedy.

6. Project Requirements

6.1 Contractor Quality Control Plan

The CQC Plan (Appendix B) was prepared in accordance with Navy quality control (QC) guidance (Unified Facilities Guide Specification 01 45 02). The plan includes:

- A description of the QC organization, including a chart showing lines of authority;
- The name, qualifications, duties, authorities, and responsibilities of each person assigned a QC function;
- A schedule for managing submittals, testing, inspections, and any other QC function that involves ensuring quality workmanship, verifying compliance with the plans and specifications, or any other QC objectives;
- A schedule of inspections required to verify compliance with contract specifications;
- Reporting procedures and reporting format for quality assurance and QC activities, including such items as daily summary reports, schedule of data submissions, inspection data sheets, problem identification and corrective measures reports, evaluation reports, acceptance reports, and final documentation; and

- A list of definable features of the work to be performed.

All construction activities specified in this RAWP will be implemented under the QC measures specified in the project CQC Plan. CQC measures will ensure compliance with design specifications, and that the construction practices achieve the design objectives. CQC documentation, including but not limited to daily CQC inspections, daily photographic logs, product and material submittals, preparatory documentation, weekly CQC meeting agendas and minutes, and CQC testing information, will be submitted to the ROICC, RPM, and KO as specified in the CQC Plan (Appendix B). The daily CQC documentation will be submitted with the daily contractor production reports and the daily health and safety tailgate attendance forms.

6.2 Health and Safety Plan

6.2.1 Accident Prevention Plan and Site Safety and Health Plan

The Health and Safety Plan (HSP; ARCADIS 2012) is comprised of the APP and the SSHP, which were prepared in the format required by the U.S. Army Corps of Engineers' (USACE) Consolidated Engineer Manual 385-1-1 (USACE 2008), and comply with the requirements of the Unified Facilities Guide Specifications 01 35 26 (USACE/NAVFAC 2012). Compliance with the APP and SSHP will provide a safe and healthy environment for all personnel involved, as well as personnel working near the jobsites. All work shall be in accordance with the HSP.

The prime contractor will certify to the Navy RPM that the Final APP and SSHP are reviewed with each contractor and subcontractor employee prior to mobilization and start of fieldwork activities. The APP and SSHP will be immediately accessible to all workers at the sites at all times during the project, and copies shall be located adjacent to the Safety and Health Bulletin on site and in every vehicle on site.

The APP and SSHP will be reviewed on a regular basis because it is a "living" document that may require updates as site conditions change. Changes to the activity hazard analyses made in the field will be documented and added to the activity hazard analyses as field change notices.

6.3 Environmental Protection Plan

The Environmental Protection Plan is comprised of the SWPPP (Appendix E) and the DCP (Appendix D). These plans satisfy the substantive requirements of the appropriate storm water and dust mitigation ARARs.

6.3.1 CERCLA Stormwater Plan

The SWPPP (Appendix E) describes the site, work to be performed, BMPs to be implemented for construction activities, BMPs to be implemented for erosion and sediment control, waste management and disposal practices for spill responses, post-construction controls, site inspection and monitoring programs, responsible personnel, training requirements, and certifications and compliance requirements.

The project-specific SWPPP meets the requirements of the California General Permit for Discharges of Storm Water Associated with Construction Activity (Construction General Permit Order 2009-0009-DWQ as amended by Order 2010-0014-DWQ). A copy of the approved SWPPP will be kept at the on-site construction office trailer and will be continually updated to reflect and account for changes in site conditions.

Storm water BMPs described in the SWPPP include installation or application of fiber rolls, perimeter silt fence, drain filters, erosion control mats, soil stabilizer and dust control agent, and sandbags, as needed, to prevent erosion. A general National Pollutant Discharge Elimination System storm water construction permit is not required because the activities are conducted under Section 121(e) of CERCLA.

6.3.2 Dust Control Plan

The project-specific DCP (Appendix D) incorporates the procedures and practices included in the existing approved Basewide DCP (Tetra Tech 2009) and includes a brief amendment to the Basewide DCP to summarize dust control practices specific to the field activities associated with the RA on Parcel G. The DCP is a comprehensive plan that meets or exceeds the substantive requirements of the air quality ARARs for construction and environmental remediation activities at HPNS.

The DCP specifies dust control measures to be implemented during material import, movement, and placement. The DCP focuses on dust mitigation requirements, along with dust control practices and air monitoring practices and requirements. Dust management will be performed during excavation, soil placement, and asphalt repair

by applying water and dust control agent to erodible areas to minimize wind-blown dust. Air monitoring will be implemented during all site activities. In addition to ensuring the protection of site workers, results of air monitoring will be used to evaluate the effectiveness of dust control measures. Specifically, the prime contractor will:

- Operate static upwind and downwind air monitoring equipment for asbestos, PM10, TSP, lead, arsenic, and manganese (See Figure 1 of Appendix D for planned locations of the air monitoring stations);
- Perform air monitoring for worker safety using National Institute of Occupational Safety and Health's sampling and analysis methods;
- Install a weather station to allow for determination of the wind speed and prevailing wind direction, and to ensure proper placement of the air monitoring equipment;
- Brief site workers on the California Air Resource Board regulation concerning "Asbestos Airborne Toxic Control Measures for Construction Sites"; and
- Provide air monitoring data to the Navy on a regular basis for review and distribution to concerned parties.

Additional descriptions of the air monitoring procedures as well as the proposed locations of the air monitoring equipment and weather station are provided in the DCP (Appendix D).

6.4 Waste Management Plan

The Waste Management Plan (Appendix F) describes the waste management, transport, storage, and disposal procedures to be implemented during the RA. The prime contractor will coordinate with the CSO representative and ROICC to ensure that all wastes generated are appropriately stored, characterized, hauled off site, and disposed of in accordance with the base-wide waste disposal procedures and applicable federal, state, and local regulations. Site work will be done to minimize the amount of waste removed from the site.

Waste minimization practices will be implemented to reduce the volume of waste generated, stored, and removed from the worksites, with an emphasis on recycling to the extent practicable. Materials to be recycled will be characterized, if necessary, prior to being reused.

6.5 Traffic Control Plan

Traffic volume and circulation at HPNS fall under the purview of the ROICC and CSO representative. The locations of major ingress and egress for the project and the proposed traffic routes are shown in the TCP (Appendix C). The TCP discusses transportation information, including roadway closures, detours, and temporary routes that will be designated for vehicles.

Parcel G contains Spear Avenue, an arterial roadway for HPNS. This road is known to accommodate a high volume of truck traffic. Temporary road closures will be implemented to ensure worker safety in the construction zone, which will affect traffic flow at HPNS to some degree. Appropriate alternate routes will be designated and properly marked with detour signs to prevent confusion and minimize impact to other activities taking place at HPNS. Extensive coordination will be performed between the prime contractor, the ROICC and CSO, and other contractors working at HPNS to ensure minimal disruption.

6.6 Remedial Action Completion Report

After the Final Inspection, a comprehensive RACR will be prepared and submitted that summarize all the RA activities conducted per the ROD for Parcel G. The RACR will be certified by the Project Manager and a licensed professional engineer employed by the prime contractor and actively involved in the project.

The RACR will include the following items:

- Site conditions and background
- Description of field methods and procedures for all RA components
- Description of variances from the RAWP for all RA components
- Summary of work defined in the RAWP for all RA components, and certification that the work was performed in accordance with applicable plans and specifications
- RA construction activities
- Construction monitoring (air monitoring data)

- Conclusions and recommendations
- References
- Appendices

The appendices will include Record Drawings (including the results of the final as-built survey); waste characterization and disposal information (if any); sampling and survey information; responses to comments from the regulatory agencies on the Draft RACR; and other supporting information, as appropriate.

6.7 Remedial Action Fact Sheet

After the completion of construction activities, a 2-page CERCLA RA fact sheet will be prepared and distributed to provide the community with a summary of the action memorandum, RA construction activities, a selection of before and after photographs, and some of the information to be included in the RACR. A draft version of the RA fact sheet will be distributed electronically and in hard copy to the Navy and the regulatory agencies for review and comment, prior to distribution of the final version. It is estimated that approximately 2,500 copies of the final fact sheet will be distributed via U.S. mail to the recipients included on the Navy's distribution matrix for Parcel G.

6.8 State Historic Preservation Office Letter

The Navy will prepare and submit a letter to the State Historic Preservation Office (SHPO). The letter will notify the SHPO that the anticipated field activities described in this RAWP will occur within or near potentially archeologically sensitive areas. The letter will describe the planned field activities and where they will occur. A figure showing the proposed RA areas will be included as an attachment to the letter. The letter will be submitted and SHPO approval will be received before any intrusive activities within archaeologically sensitive areas begins.

6.9 Operation and Maintenance Plan

A Final O&M Plan will be prepared after completion of the RA and will provide final maintenance and monitoring requirements for the durable covers. The O&M Plan will also provide an inspection process that maintains the remedy in a condition to be protective of human health and the environment during the post-closure period. The

plan will be based on the Final Preconstruction O&M Plan included in the Final RD Package (ChaduxTt 2010).

The O&M Plan will specify the qualifications of the person overseeing the site monitoring and maintenance. Monitoring will include inspection and documentation of the general site conditions, documentation of issues or concerns, and coordination and documentation of implemented remedies. The O&M Plan will specify the frequency of inspections and reporting requirements. Until the Final O&M Plan is issued, inspections, periodic maintenance, and repairs will be performed in accordance with the Final Preconstruction O&M Plan included in the Final RD Package (ChaduxTt 2010), which specifies that inspections will be conducted on a quarterly basis during the first year of O&M activities and annually thereafter.

The items that will be noted during inspections include:

- Pavement and foundation conditions (e.g., cracking greater that ¼ inch);
- Crawl space access is blocked off (Buildings 420 and 424);
- Condition of survey monuments;
- Surface condition of monitoring wells;
- Vandalism and unauthorized access to site or buildings; and
- Fencing conditions and signs of unauthorized access.

An annual inspection summary report will be prepared and submitted to the Federal Facilities Agreement signatories to summarize the results of the quarterly (annual after first year) inspections. The O&M Plan will also discuss repairs to the cover to restore it to post-RA conditions.

7. References

Alliance Compliance Group. 2010. Final Parcels D-1 and G Groundwater Treatability Study Technical Report, IR-09, IR-33, and IR-71, Hunters Point Shipyard, San Francisco, California. March.

ARCADIS. 2012. Draft Accident Prevention Plan for Parcel G, Hunters Point Naval Shipyard, San Francisco, California. September.

California Department of Toxic Substances Control (DTSC). 2001. Information Advisory, Clean Imported Fill Material. October.

CE2-Kleinfelder. 2012. Final Technical Memorandum for Monitoring Program Optimization in Parcels B, D-1, G, and UC-2, Hunters Point Naval Shipyard, San Francisco, California. June.

ChaduxTt. 2010. Final Remedial Design Package, Parcel G, Hunters Point Shipyard, San Francisco, California. October.

Department of the Navy (Navy). 2009. Final Record of Decision for Parcel G, Hunters Point Shipyard, San Francisco, California. February 18.

Engineering/Remediation Resources Group, Inc. 2011. Final Remedial Action Completion Report for Soil Hotspot Locations at Parcels B, D-1, and G and Soil Stockpiles at Parcels D-1 and G, Hunters Point Naval Shipyard, San Francisco, California. October.

Naval Sea Systems Command. 2004. Historical Radiological Assessment, Volume II, History of the Use of General Radioactive Materials 1939–2003. August.

Sealaska Environmental Services, 2012. "Phase I Technical Memorandum for Soil Vapor Intrusion at Parcels B, D-1, G, and UC-2, Hunters Point Naval Shipyard, San Francisco, California." July.

SulTech. 2007. Revised Final Feasibility Study for Parcel D, Hunters Point Shipyard, San Francisco, California. November 30.

Tetra Tech EC Inc. (Tetra Tech). 2006. Hunters Point Shipyard Project, Backfill Review and Acceptance Instruction, Revision 0. Aril 12.

Tetra Tech EC Inc. (Tetra Tech). 2009. Final Basewide Dust Control Plan, Hunters Point Shipyard, San Francisco, California. June.

Tetra Tech. 2011. Parcel G Removal Action Completion Report, Hunters Point Shipyard, San Francisco, California. October.

U.S. Army Corps of Engineers (USACE). 2008. Consolidated Engineer Manual 385-1-1, Safety and Health Requirements, Engineers Manual (EM 385-1-1). September 15 (Last Revised July 2011).

U.S. Department of Defense (DoD). 2001. Unified Facilities Criteria Concrete Crack and Partial-Depth Spall Repair (UFC 3-270-03). March 14 (Revised 16 May 2006).

U.S. Environmental Protection Agency (USEPA). 2002. Guidance for Quality Assurance Project Plans, EPA QA/G-5. EPA/240/R-02/009. December.

USEPA. 2005. Uniform Federal Policy for Quality Assurance Project Plans, Evaluating, Assessing, and Documenting Environmental Data Collection and Use Programs. Final, Version 1. EPA-505-B-04-900A. Intergovernmental Data Quality Task Force. March.

ARCADIS

TABLES

Table 1. Existing Sampled Monitoring Wells at Parcel G

Plume/Monitoring Objective	**Well**	**Currently Monitored Chemicals of Concern**
IR-71 East VOC Plume	IR71MW03A	PCE, TCE, cis-1,2-DCE, vinyl chloride
	IR71MW04A	PCE, TCE, cis-1,2-DCE, vinyl chloride
IR-71 West VOC Plume	IR44MW08A	Chloroform, TCE, cis-1,2-DCE, vinyl chloride
IR-33 VOC Plume	IR33MW64A	Carbon tetrachloride, Chloroform
IR-09 North VOC and Hexavalent Chromium Plumes	IR09MW07A	Chloroform, TCE, cis-1,2-DCE, vinyl chloride
	IR09MW51F	Benzene, TCE, cis-1,2-DCE, vinyl chloride
	IR09MW64A (replaced IR09PPY1)	Hexavalent chromium
Abbreviations: DCE: Dichloroethene PCE: Tetrachloroethene TCE: Trichloroethene		
Note: Listed wells reflect proposed revisions in Final Technical Memorandum for Monitoring Program Optimization Parcels B, D-1, G, and UC-2, Hunters Point Naval Shipyard; CE2-Kleinfelder Joint Venture, June 2012,		

ARCADIS

FIGURES

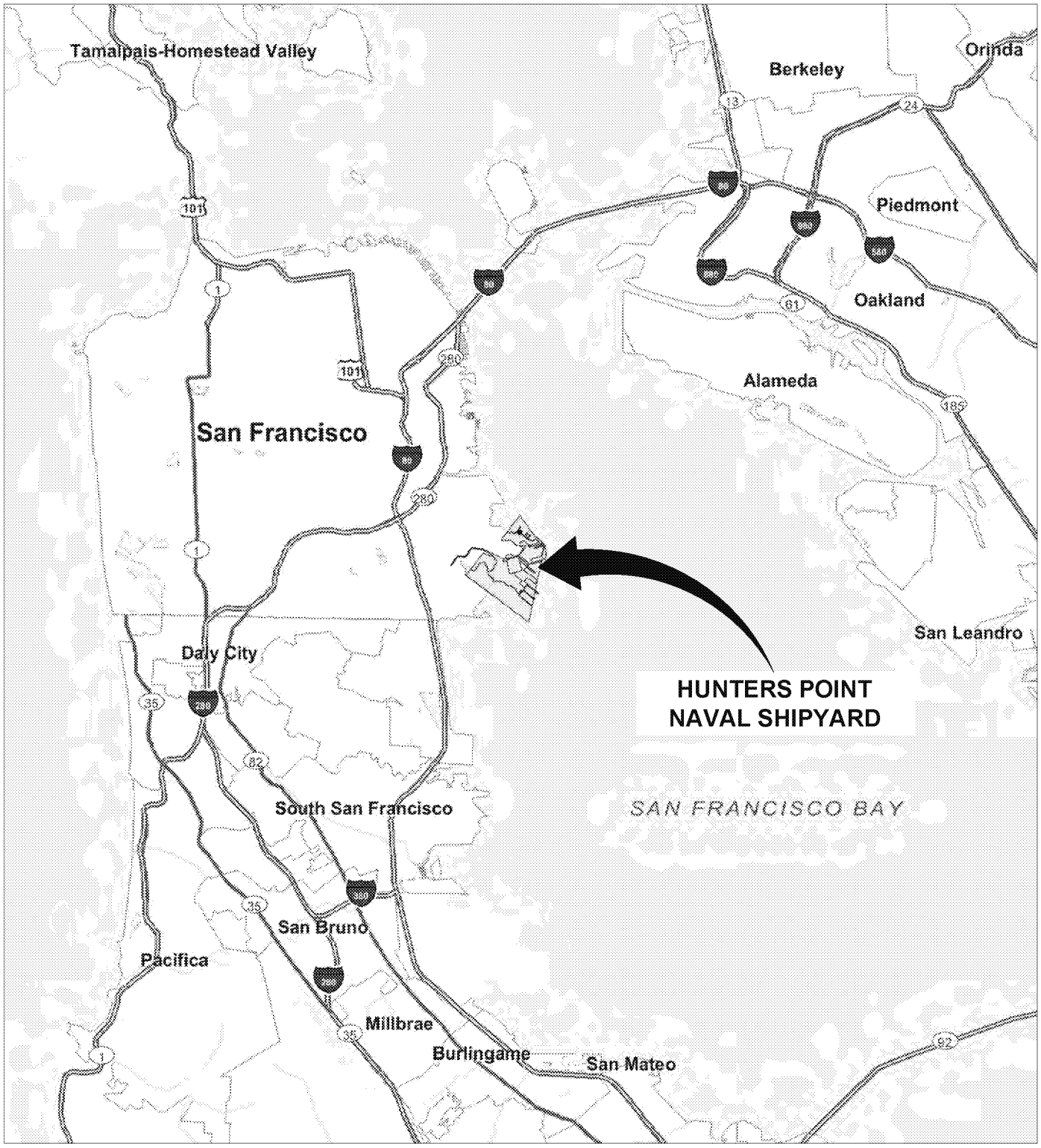

REFERENCE: ESRI DATA LIBRARY

0 7000' 14000'

Approximate Scale in Feet

NAVY BASE REALIGNMENT AND CLOSURE PROGRAM
SAN FRANCISCO, CALIFORNIA

PARCEL G, HUNTERS POINT NAVAL SHIPYARD
REMEDIAL ACTION WORK PLAN

SITE LOCATION MAP

ARCADIS

FIGURE
1

CITY:(Reqd) DIV/GROUP:(Reqd) DB:(Reqd) LD:(Opt) PIC:(Opt) PM:(Reqd) TM:(Opt) LYR:(Opt)ON=*;OFF=*REF*
G:\Projects\CA000776\Design\Figs\RAWP Fig 1.dwg LAYOUT: 1 SAVED: 9/12/2012 2:29 PM ACADVER: 18.1S (LMS TECH) PAGESETUP: ---- PLOTSTYLETABLE: ---- PLOTTED: 9/12/2012 2:30 PM BY: OBERBAUER, PAUL

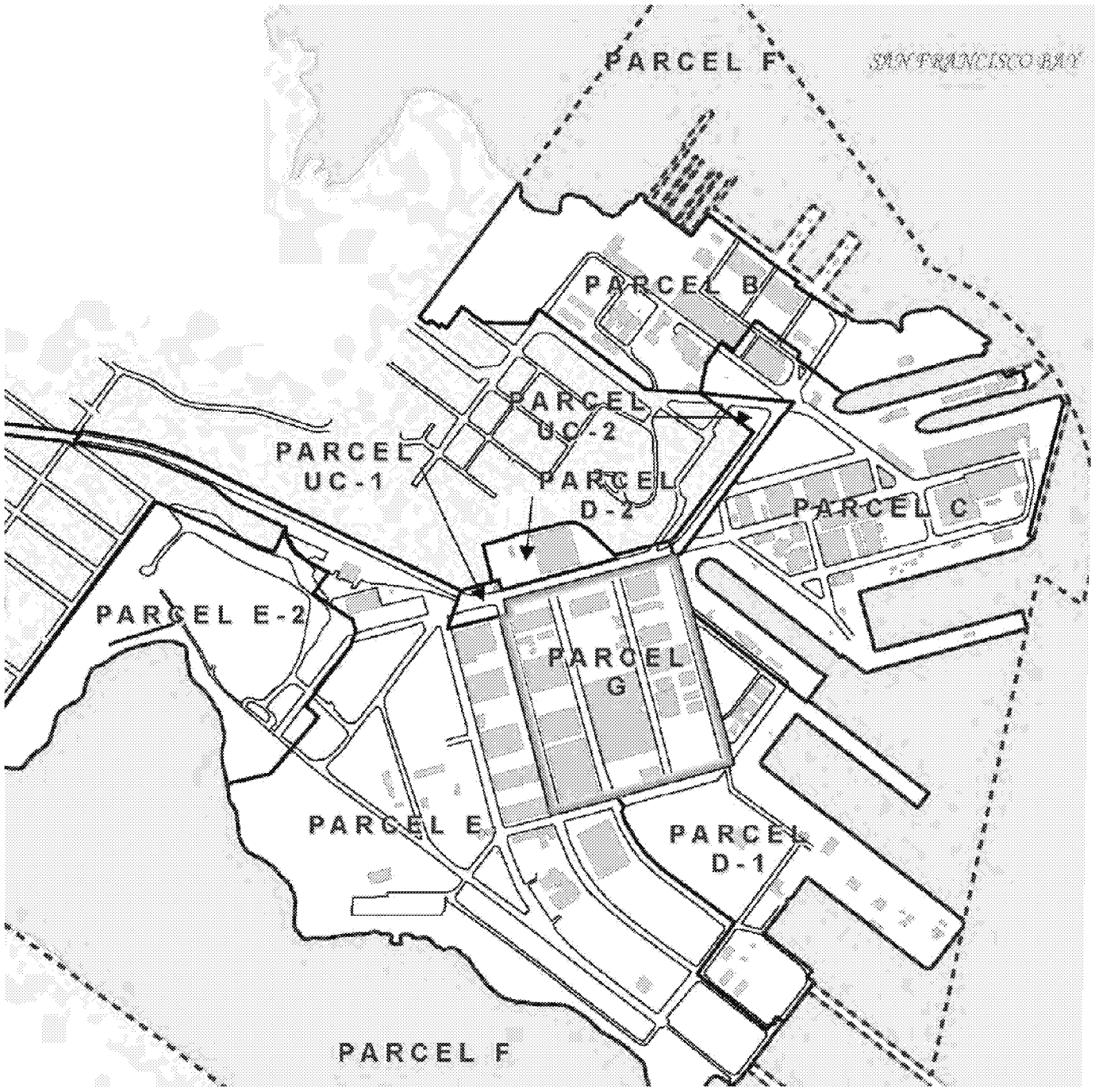

Parcel Boundary
Parcel G Boundary
Parcel F Boundary
Building
Non-Navy Property
Road

0 1,000'

NAVY BASE REALIGNMENT AND CLOSURE PROGRAM
SAN FRANCISCO, CALIFORNIA

PARCEL G, HUNTERS POINT NAVAL SHIPYARD
REMEDIAL ACTION WORK PLAN

HUNTERS POINT MAP

ARCADIS

FIGURE
2

CITY:(Reqd) DIV/GROUP:(Reqd) DB:(Reqd) LD:(Opt) PIC:(Opt) PM:(Reqd) TM:(Opt) LYR:(Opt)ON=*;OFF=*REF*
G:\Projects\CA000776\Design\Figs\DRAFT RAWP Figs 2,3,5,6,7.dwg LAYOUT: 2 SAVED: 11/14/2012 4:59 PM ACADVER: 18.1S (LMS TECH) PAGESETUP: ARCADIS ANSI A PLOTSTYLETABLE: LFR STANDARD.CTB PLOTTED: 11/15/2012 4:55 PM BY: OBERBAUER, PAUL
XREFS: PROJECTNAME: —

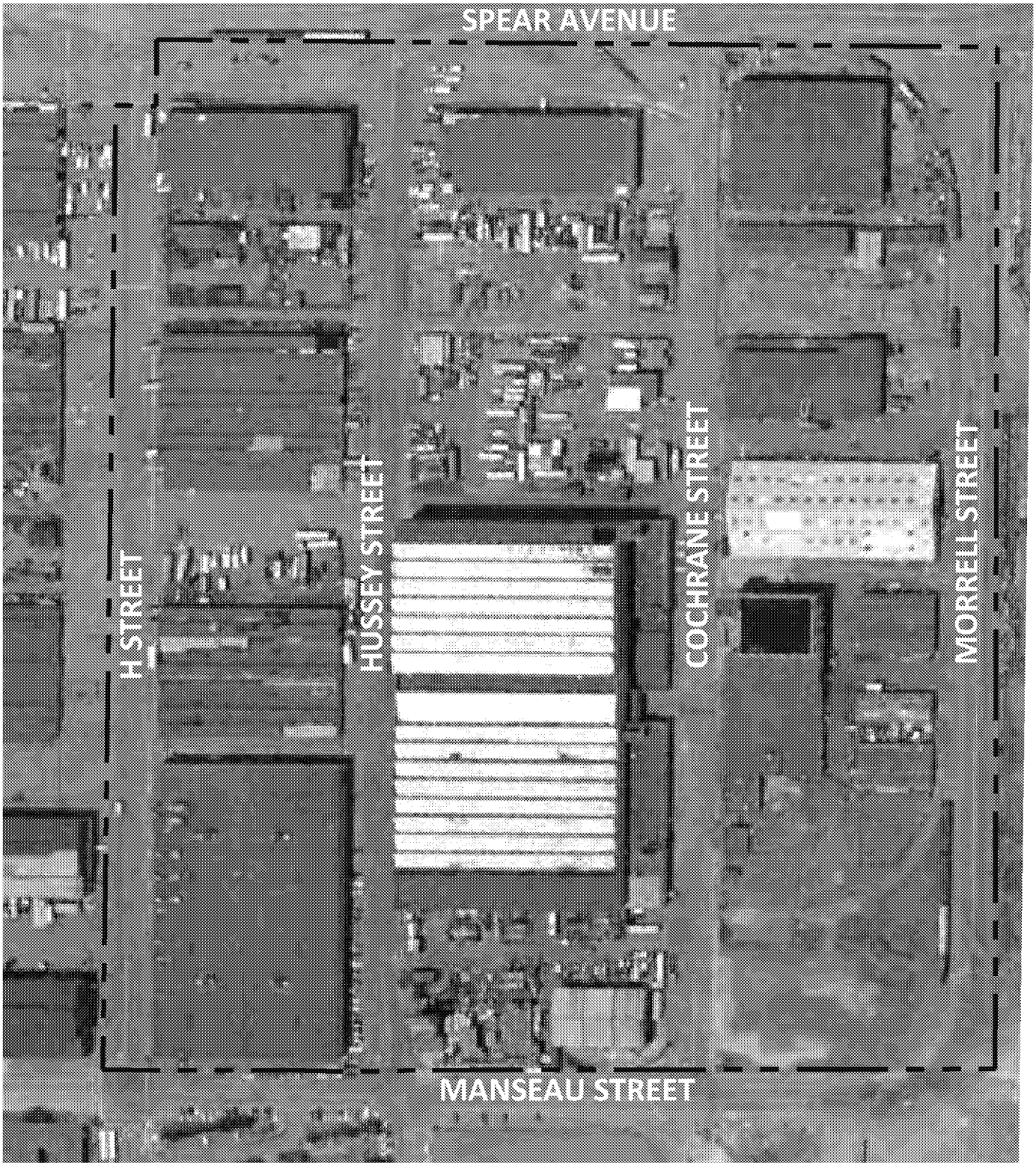

SOURCE: GOOGLE EARTH (IMAGE DATE: 12/2004)

LEGEND

APPROXIMATE PARCEL G BOUNDARY

0 200'

NAVY BASE REALIGNMENT AND CLOSURE PROGRAM
SAN FRANCISCO, CALIFORNIA
PARCEL G, HUNTERS POINT NAVAL SHIPYARD
REMEDIAL ACTION WORK PLAN

HISTORIC PARCEL G AERIAL (2005)

ARCADIS

FIGURE
3

CITY:(Reqd) DIV/GROUP:(Reqd) DB:(Reqd) LD:(Opt) PIC:(Opt) PM:(Reqd) TM:(Opt) LYR:(Opt)ON=*;OFF=*REF*
G:\Projects\CA000776\Design\Figs\DRAFT RAWP Figs 2,3,5,6,7.dwg LAYOUT: 3 SAVED: 11/14/2012 4:59 PM ACADVER: 18.1S (LMS TECH) PAGESETUP: ARCADIS ANSI A PLOTSTYLETABLE: LFR STANDARD.CTB PLOTTED: 11/15/2012 4:55 PM BY: OBERBAUER, PAUL
XREFS: PROJECTNAME: ---

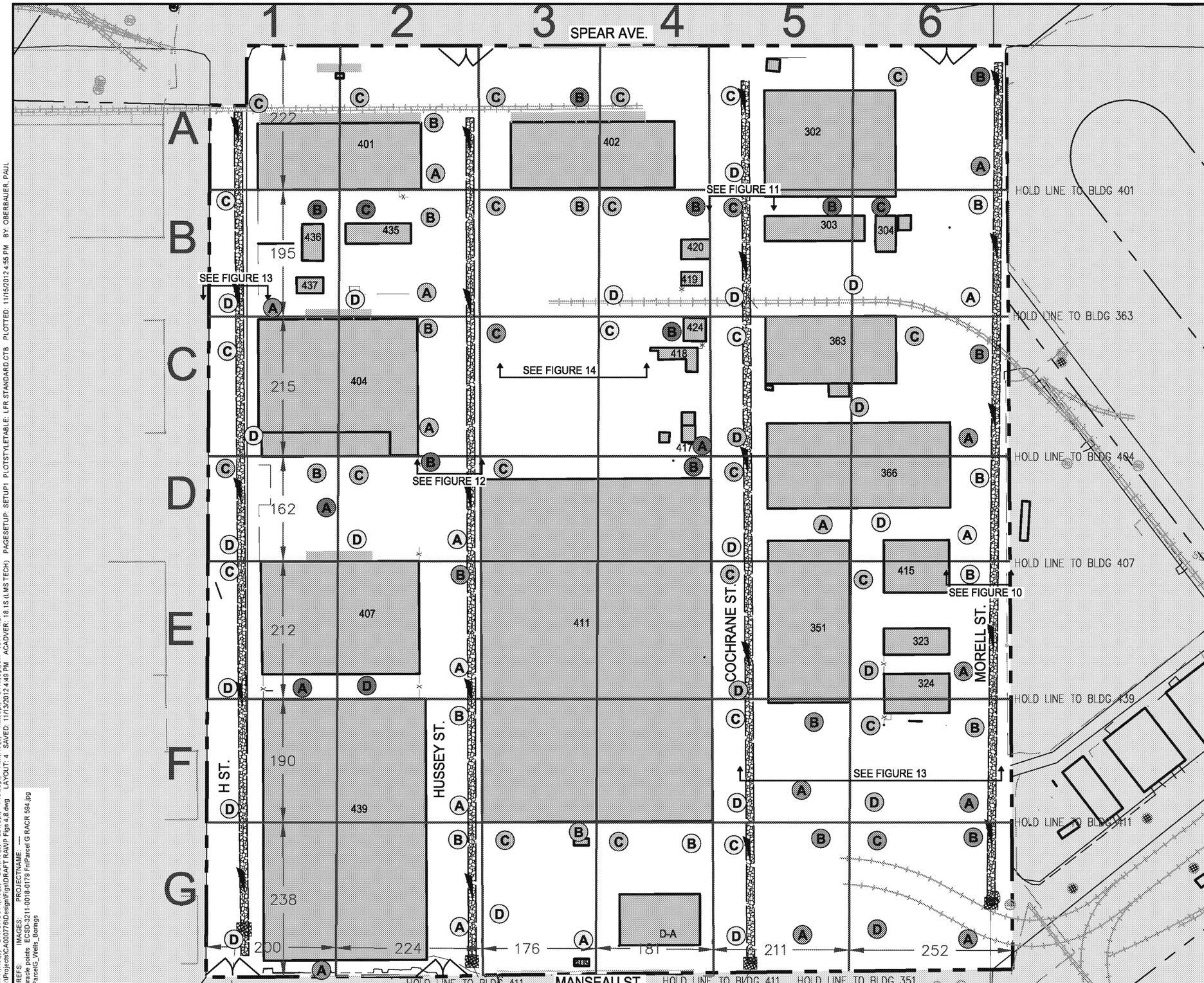

LEGEND

PARCEL G BOUNDARY

EXISTING AGGREGATE DRAINAGE SWALE WITH FLOW DIRECTION

EXISTING RAILROAD TRACKS

411 — EXISTING BUILDING PAD AND FORMER BUILDING NUMBER

POTHOLE OBSERVATION POINTS

OBSERVED EXISTING SURFACE ASPHALTIC CONCRETE

OBSERVED EXISTING ASPHALTIC CONCRETE UNDER ROAD BASE MATERIAL

OBSERVED EXISTING SURFACE ROAD BASE/ AGGREGATE MATERIAL

OBSERVED EXISTING SURFACE SOIL

NOTES:

1. LETTER DESIGNATIONS A, B, C, & D INDICATE GENERAL OBSERVATION LOCATIONS WITHIN A GRID IN COUNTER-CLOCKWISE SEQUENCE BEGINNING AT THE SOUTHEAST CORNER.
2. GRID CORNER OBSERVATION POINTS THAT WOULD BE LOCATED ON EXISTING BUILDING SLABS WERE NOT EVALUATED AS THEY DO NOT REPRESENT THE EXTERIOR SURFACE ON PARCEL G.

0 150' 300'

GRAPHICAL SCALE

NAVAL BASE REALIGNMENT AND CLOSURE PROGRAM
SAN FRANCISCO, CALIFORNIA

PARCEL G, HUNTERS POINT NAVAL SHIPYARD REMEDIAL ACTION WORK PLAN

PARCEL G MAP

ARCADIS

FIGURE **4**

CITY:(Reqd) DIV/GROUP:(Reqd) DB:(Reqd) LD:(Opt) PIC:(Opt) PM:(Reqd) TM:(Opt) LYR:(Opt)ON=*;OFF=*REF*
G:\Projects\CA000776\Design\Figs\DRAFT RAWP Figs 4 & 6.dwg LAYOUT: 4 SAVED: 11/13/2012 4:49 PM ACADVER: 18.1S (LMS TECH) PAGESETUP: SETUP1 PLOTSTYLETABLE: LFR STANDARD.CTB PLOTTED: 11/15/2012 4:55 PM BY: OBERBAUER, PAUL
XREFS: IMAGES: PROJECTNAME: —
oracle points EC3D-3211-0018-0179 FnlParcel G RACR 594.jpg
ParcelG_Wells_Borings

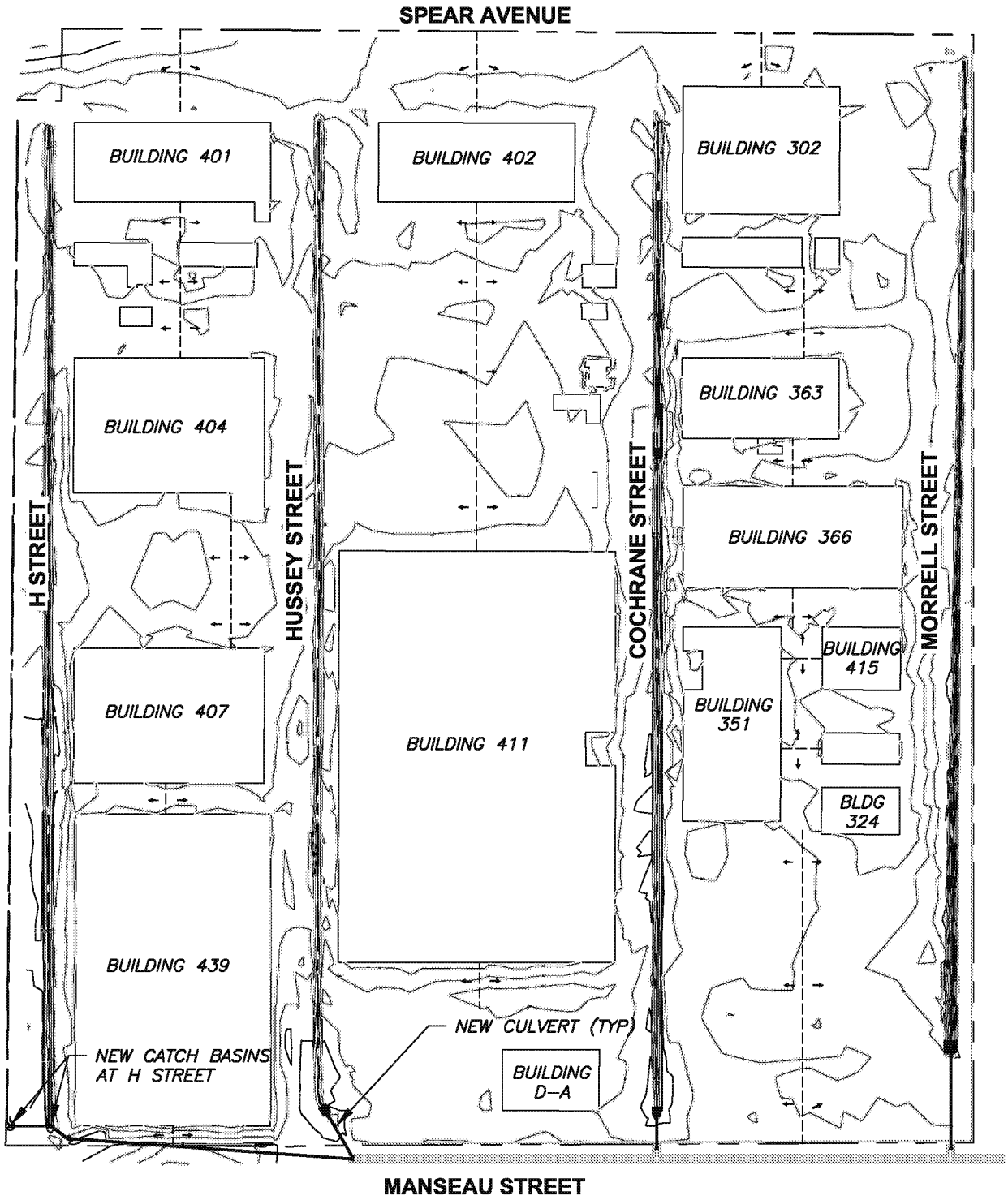

LEGEND

- RIDGE LINE
- FLOW LINE
- EXISTING ROCK LINED CHANNEL
- FLOW DIRECTION
- PROPOSED PIPE/CULVERT

N

0 200 Feet

NAVY BASE REALIGNMENT AND CLOSURE PROGRAM
SAN FRANCISCO, CALIFORNIA
PARCEL G, HUNTERS POINT NAVAL SHIPYARD
REMEDIAL ACTION WORK PLAN

FINISHED DURABLE COVER PLAN

ARCADIS

FIGURE
5

CITY:(Reqd) DIV/GROUP:(Reqd) DB:(Reqd) LD:(Opt) PIC:(Opt) PM:(Reqd) TM:(Opt) LYR:(Opt)ON=*;OFF=*REF*
G:\Projects\CA000776\Design\Grading Drainage Paving Plan.dwg LAYOUT: 5 SAVED: 11/20/2012 8:09 AM ACADVER: 18.1S (LMS TECH) PAGESETUP: ARCADIS ANSI A PLOTSTYLETABLE: LFR STANDARD.CTB PLOTTED: 11/20/2012 8:10 AM BY: OBERBAUER, PAUL
XREFS: IMAGES: PROJECTNAME: ---
Xtopo 20120629
X BDR-C-LD

EXISTING CONDITIONS

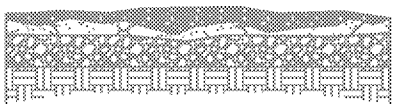

EXISTING AB OVERLYING THE HISTORICAL AC

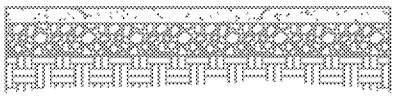

EXISTING EXPOSED AC IN GOOD CONDITION

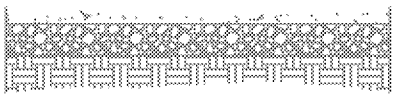

EXISTING EXPOSED AC IN POOR CONDITION

PROPOSED CONDITIONS

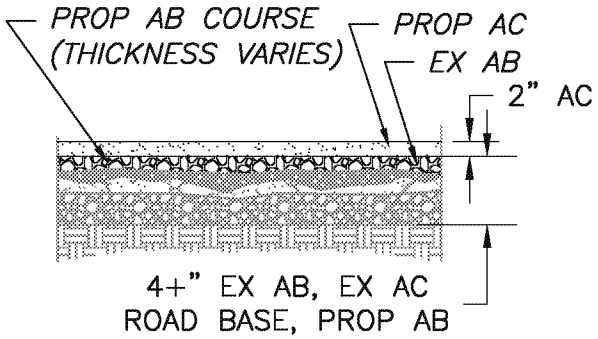

APPLY AC COVER ADDING TO EX AB

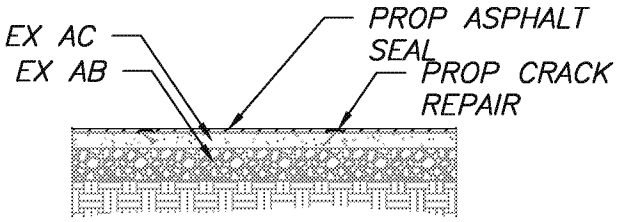

REPAIR EXISTING AC

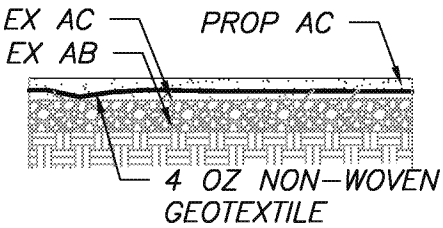

APPLY AC OVERLAY WITH GEOTEXTILE

NAVY BASE REALIGNMENT AND CLOSURE PROGRAM
SAN FRANCISCO, CALIFORNIA
PARCEL G, HUNTERS POINT NAVAL SHIPYARD
REMEDIAL ACTION WORK PLAN

CONCEPTUAL COVER CROSS SECTIONS

ARCADIS

FIGURE
6A

CITY:(Reqd) DIV/GROUP:(Reqd) DB:(Reqd) LD:(Opt) PIC:(Opt) PM:(Reqd) TM:(Opt) LYR:(Opt)ON=*;OFF=*REF*
G:\Projects\CA000776\Design\Figs\DRAFT RAWP Figs 2,3,5,6,7.dwg LAYOUT: 6A SAVED: 11/20/2012 8:02 AM ACADVER: 18.1S (LMS TECH) PAGESETUP: ARCADIS ANSI A PLOTSTYLETABLE: LFR STANDARD.CTB PLOTTED: 11/20/2012 8:10 AM BY: OBERBAUER, PAUL
XREFS: PROJECTNAME: ---

EXISTING CONDITIONS

PROPOSED CONDITIONS

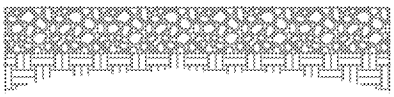

DRAINAGE SWALES
(CRUSHED DRAIN ROCK)

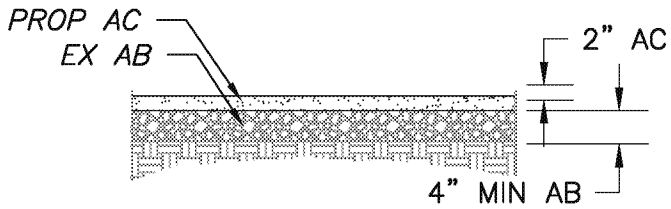

APPLY AC OVERLAY

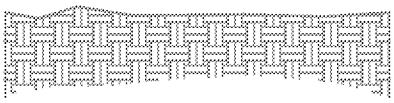

EXISTING EXPOSED SOIL

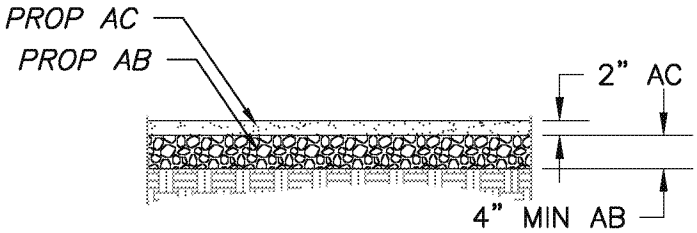

APPLY NEW FULL PAVEMENT SECTION

EXISTING CONCRETE SLAB
(MONITORING WELLS & OTHER MONOLITHIC ITEMS)

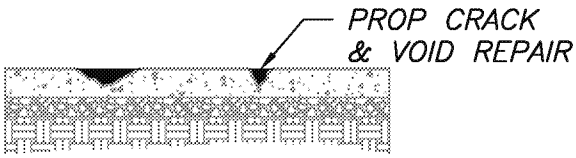

REPAIR/PATCH EXISTING SLAB

NAVY BASE REALIGNMENT AND CLOSURE PROGRAM
SAN FRANCISCO, CALIFORNIA
PARCEL G, HUNTERS POINT NAVAL SHIPYARD
REMEDIAL ACTION WORK PLAN

CONCEPTUAL COVER CROSS SECTIONS

ARCADIS

FIGURE
6B

CITY:(Reqd) DIV/GROUP:(Reqd) DB:(Reqd) LD:(Opt) PIC:(Opt) PM:(Reqd) TM:(Opt) LYR:(Opt)ON=*;OFF=*REF*
G:\Projects\CA000776\Design\Figs\DRAFT RAWP Figs 2,3,5,6,7.dwg LAYOUT: 6B SAVED: 11/20/2012 8:02 AM ACADVER: 18.1S (LMS TECH) PAGESETUP: ARCADIS ANSI A PLOTSTYLETABLE: LFR STANDARD.CTB PLOTTED: 11/20/2012 8:10 AM BY: OBERBAUER, PAUL
XREFS: PROJECTNAME: ---

Task Name	Duration	Start	Finish	Predecessors
Parcel G Remedial Action	**541 days**	**Thu 5/3/12**	**Mon 6/23/14**	
Contract Award	1 day	Thu 5/3/12	Thu 5/3/12	
Work Element No. 1 - Meetings, PM, Administrative Support	**483 days**	**Thu 5/3/12**	**Wed 4/2/14**	
Kick Off Meeting	1 day	Tue 5/8/12	Tue 5/8/12	
BCT Meetings (6)	**316 days**	**Thu 5/3/12**	**Mon 8/5/13**	
Contractor Integration Meetings (4)	**262 days**	**Thu 5/17/12**	**Mon 6/3/13**	
Community Meetings (8)	**295 days**	**Mon 6/4/12**	**Mon 8/5/13**	
Monthly Project Management Updates (24)	**483 days**	**Thu 5/3/12**	**Wed 4/2/14**	
Work Element No. 2 - Project Plans	**141 days**	**Tue 5/8/12**	**Thu 11/29/12**	
Remedial Action Work Plan (RAWP, including all supporting plans)	**141 days**	**Tue 5/8/12**	**Thu 11/29/12**	
Prepare Internal Draft RAWP	60 edays	Tue 5/8/12	Sat 7/7/12	3
Navy Review	30 edays	Sat 7/7/12	Mon 8/6/12	52
Prepare Draft RAWP	30 edays	Mon 8/6/12	Wed 9/5/12	53
Navy Review	7 days	Thu 9/6/12	Fri 9/14/12	54
Agency Review	45 edays	Fri 9/14/12	Mon 10/29/12	55
Final RA Work Plan	31 edays	Mon 10/29/12	Thu 11/29/12	56
Work Element No. 3 - Field Work - Remedial Action (RA) Implementation	**107 days**	**Fri 11/30/12**	**Fri 5/3/13**	
Pre-field Activities	21 days	Fri 11/30/12	Mon 12/31/12	57
Mobilization	3 days	Wed 1/2/13	Fri 1/4/13	59
Site Preparation and Temporary Construction Facilities	10 days	Mon 1/7/13	Fri 1/18/13	60
Rough Grade Site	15 days	Tue 1/22/13	Mon 2/11/13	61
Finish Grading Site	15 days	Tue 2/12/13	Tue 3/5/13	62
Place ABC	20 days	Wed 2/20/13	Tue 3/19/13	63SS+5 days
Soil Sterilant and AC Cover Placement	20 days	Wed 3/20/13	Tue 4/16/13	64
Existing Building Foundation Repairs and Sealing Crawl Spaces	30 days	Tue 1/22/13	Tue 3/5/13	61
Site Cleanup and Survey	10 days	Wed 4/17/13	Tue 4/30/13	65
Demobilization	3 days	Wed 5/1/13	Fri 5/3/13	67
Work Element No 4 - Reports	**146 days**	**Tue 4/30/13**	**Thu 11/28/13**	
Remedial Action Closure Report (RACR and O&M Plan) and Fact Sheet	**146 days**	**Tue 4/30/13**	**Thu 11/28/13**	
Prepare Internal Draft RACR, O&M Plan and Fact Sheet	47 edays	Tue 4/30/13	Sun 6/16/13	67
Navy Review	30 edays	Sun 6/16/13	Tue 7/16/13	71
Prepare Draft RACR, O&M Plan and Fact Sheet	30 edays	Tue 7/16/13	Thu 8/15/13	72
Navy Review	7 edays	Thu 8/15/13	Thu 8/22/13	73
BCT Comments Review Period	46 edays	Thu 8/22/13	Mon 10/7/13	74
Prepare RTCs for Agency Comments	14 edays	Mon 10/7/13	Mon 10/21/13	75
Navy Concurrence Period on RTCs	5 edays	Mon 10/21/13	Sat 10/26/13	76
Agency Review and Resolution of Comments	7 edays	Sat 10/26/13	Sat 11/2/13	77
Prepare Final RACR and Fact Sheet	7 edays	Sat 11/2/13	Sat 11/9/13	78
Navy Concurrence of Final RACR and Fact Sheet (over the shoulder electronic)	4 edays	Sat 11/9/13	Wed 11/13/13	79
Issue Final O&M Plan	0 edays	Mon 11/18/13	Mon 11/18/13	
EPA/DTSC Issue Concurrence	15 edays	Wed 11/13/13	Thu 11/28/13	80
Work Element No. 5 - Operation and Maintenance	**289 days**	**Mon 5/6/13**	**Mon 6/23/14**	
O&M of Final Remedy	240 days	Mon 5/6/13	Tue 4/15/14	68
Quarterly O&M Inspections (4)	**187 days**	**Thu 8/1/13**	**Fri 4/25/14**	
Quarterly O&M Inspections 1	1 day	Thu 8/1/13	Thu 8/1/13	68FS+61 days
Quarterly O&M Inspections 2	1 day	Wed 10/30/13	Wed 10/30/13	86FS+61 days
Quarterly O&M Inspections 3	1 day	Wed 1/29/14	Wed 1/29/14	87FS+61 days
Quarterly O&M Inspections 4	1 day	Fri 4/25/14	Fri 4/25/14	88FS+61 days
Quarterly O&M Reports (4)	**196 days**	**Thu 8/1/13**	**Fri 5/9/14**	
Quarterly O&M Reports 1	14 edays	Thu 8/1/13	Thu 8/15/13	86
Quarterly O&M Reports 2	14 edays	Wed 10/30/13	Wed 11/13/13	87
Quarterly O&M Reports 3	14 edays	Wed 1/29/14	Wed 2/12/14	88
Quarterly O&M Reports 4	14 edays	Fri 4/25/14	Fri 5/9/14	89
Annual O&M Report	**41 days**	**Fri 4/25/14**	**Mon 6/23/14**	
Prepare Final O&M Report	59 edays	Fri 4/25/14	Mon 6/23/14	94SS

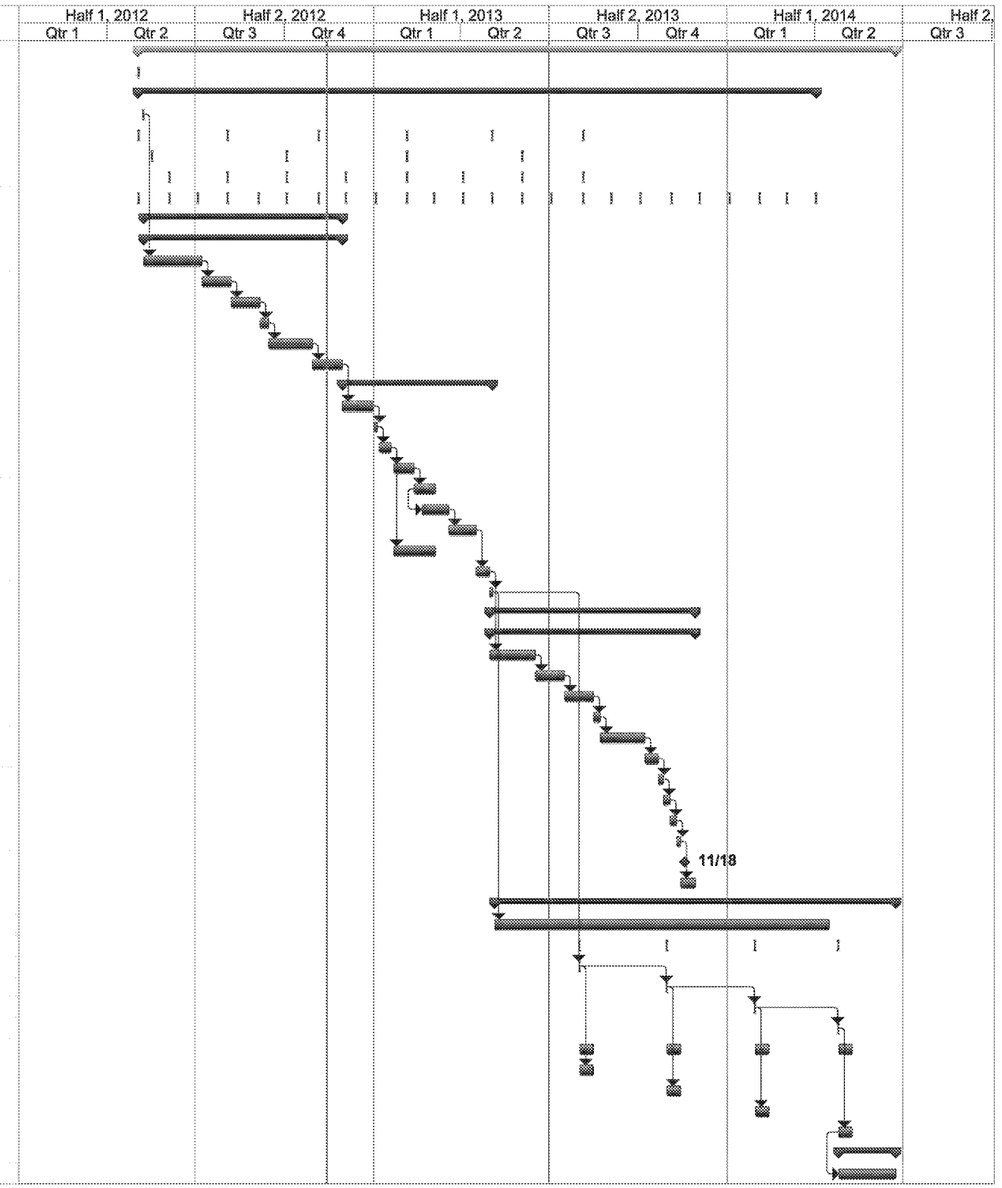

LEGEND

Task | Split | Milestone | Summary | Project Summary | External Tasks | External Milestone | Inactive Task | Inactive Milestone | Inactive Summary | Manual Task | Duration-only | Manual Summary Rollup | Manual Summary | Start-only | Finish-only | Progress | Deadline

NAVY BASE REALIGNMENT AND CLOSURE PROGRAM
SAN FRANCISCO, CALIFORNIA
PARCEL G, HUNTERS POINT NAVAL SHIPYARD
REMEDIAL ACTION WORK PLAN

PROJECT SCHEDULE

ARCADIS

FIGURE
7

CITY:(Reqd) DIV/GROUP:(Reqd) DB:(Reqd) LD:(Opt) PIC:(Opt) PM:(Reqd) TM:(Opt) LYR:(Opt)ON=*;OFF=REF*
G:\Projects\CA000776\Design\Figs\DRAFT RAWP Figs 2,3,5,6,7.dwg LAYOUT: 7 SAVED: 11/15/2012 4:56 PM ACADVER: 18.1S (LMS TECH) PAGESETUP: ARCADIS ANSI B PLOTSTYLETABLE: LFR STANDARD.CTB PLOTTED: 11/15/2012 4:56 PM BY: OBERBAUER, PAUL

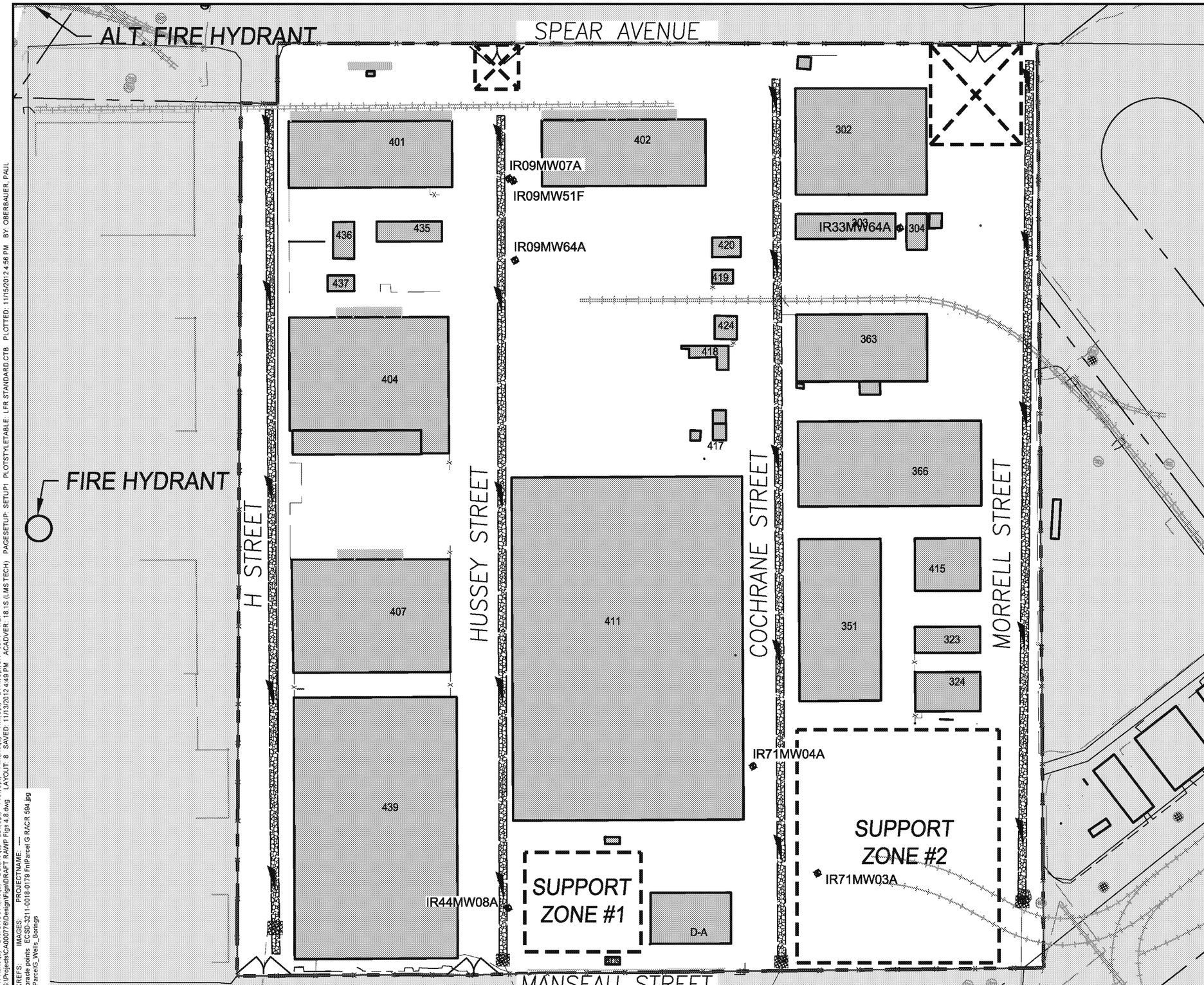

LEGEND

- PARCEL G BOUNDARY
- EXISTING AGGREGATE DRAINAGE SWALE WITH FLOW DIRECTION
- EXISTING RAILROAD TRACKS
- 411 — EXISTING BUILDING PAD AND FORMER BUILDING NUMBER
- CONTAMINATION REDUCTION ZONE
- TEMPORARY CONSTRUCTION FENCE
- EXISTING MONITORING WELLS

0 150' 300'
GRAPHICAL SCALE

NAVAL BASE REALIGNMENT AND CLOSURE PROGRAM
SAN FRANCISCO, CALIFORNIA
PARCEL G, HUNTERS POINT NAVAL SHIPYARD
REMEDIAL ACTION WORK PLAN

SUPPORT ZONE LAYOUT

ARCADIS

FIGURE
8

CITY:(Reqd) DIV/GROUP:(Reqd) DB:(Reqd) LD:(Opt) PIC:(Opt) PM:(Reqd) TM:(Opt) LYR:(Opt)ON=*;OFF=*REF*
G:\Projects\CA000776\Design\Figs\DRAFT RAWP Figs 4 & dwg LAYOUT: 8 SAVED: 11/13/2012 4:49 PM ACADVER: 18.1S (LMS TECH) PAGESETUP: SETUP1 PLOTSTYLETABLE: LFR STANDARD.CTB PLOTTED: 11/15/2012 4:56 PM BY: OBERBAUER, PAUL
XREFS: IMAGES: PROJECTNAME: —
oracle points EC3D-3211-0018-0179 Fn\Parcel G RACR 594.jpg
ParcelG_Wells_Borings

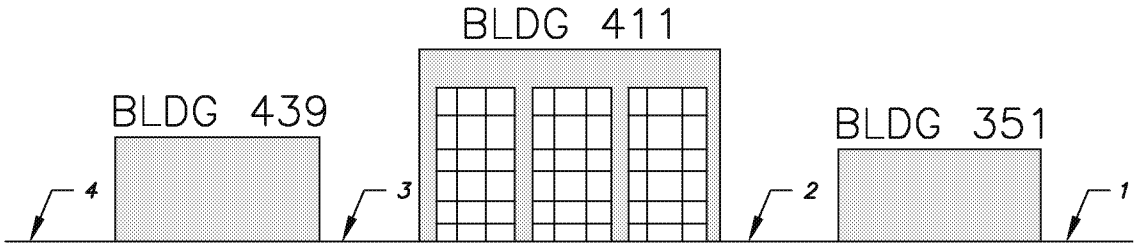

1. EAST

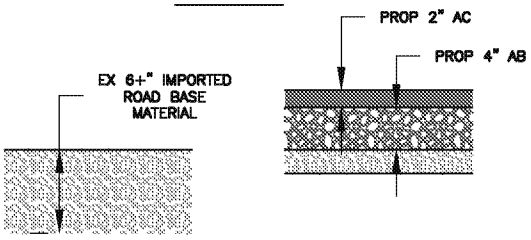

EXISTING PROPOSED

2. CENTER EAST

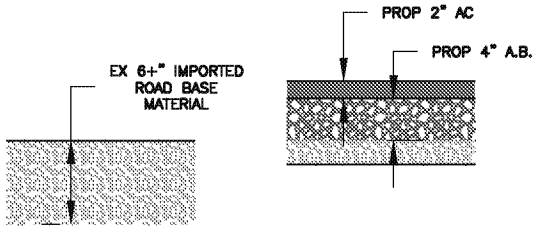

EXISTING PROPOSED

3. CENTER WEST

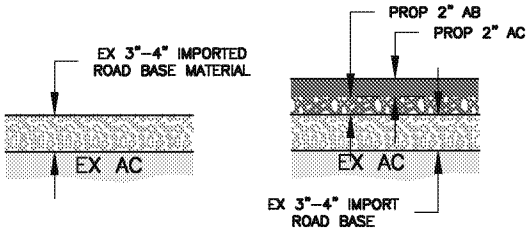

EXISTING PROPOSED

4. WEST

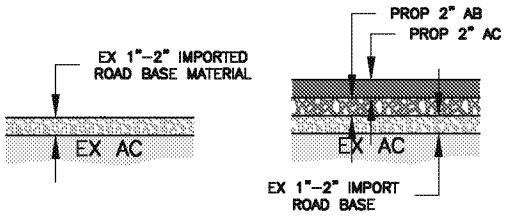

EXISTING PROPOSED

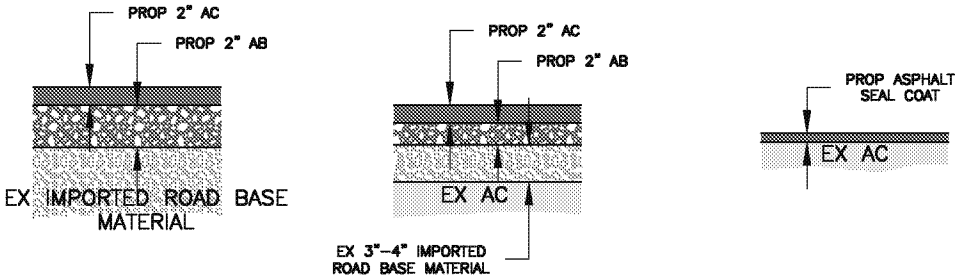

THREE MOST PREVALENT PROPOSED PAVEMENT CONDITIONS

NAVY BASE REALIGNMENT AND CLOSURE PROGRAM
SAN FRANCISCO, CALIFORNIA
PARCEL G, HUNTERS POINT NAVAL SHIPYARD
REMEDIAL ACTION WORK PLAN

PREDOMINANT PAVEMENT SECTIONS ON THE NORTH-SOUTH ROADWAYS

ARCADIS

FIGURE
9

CITY:(Reqd) DIV/GROUP:(Reqd) DB:(Reqd) LD:(Opt) PIC:(Opt) PM:(Reqd) TM:(Opt) LYR:(Opt)ON=*;OFF=*REF*
G:\Projects\CA000776\Design\Figs\DRAFT RAWP Figs 9-14.dwg LAYOUT: 9 SAVED: 11/15/2012 4:53 PM ACADVER: 18.1S (LMS TECH) PAGESETUP: ARCADIS ANSI A PLOTSTYLETABLE: LFR STANDARD.CTB PLOTTED: 11/15/2012 4:56 PM BY: OBERBAUER, PAUL
XREFS: PROJECTNAME: ---

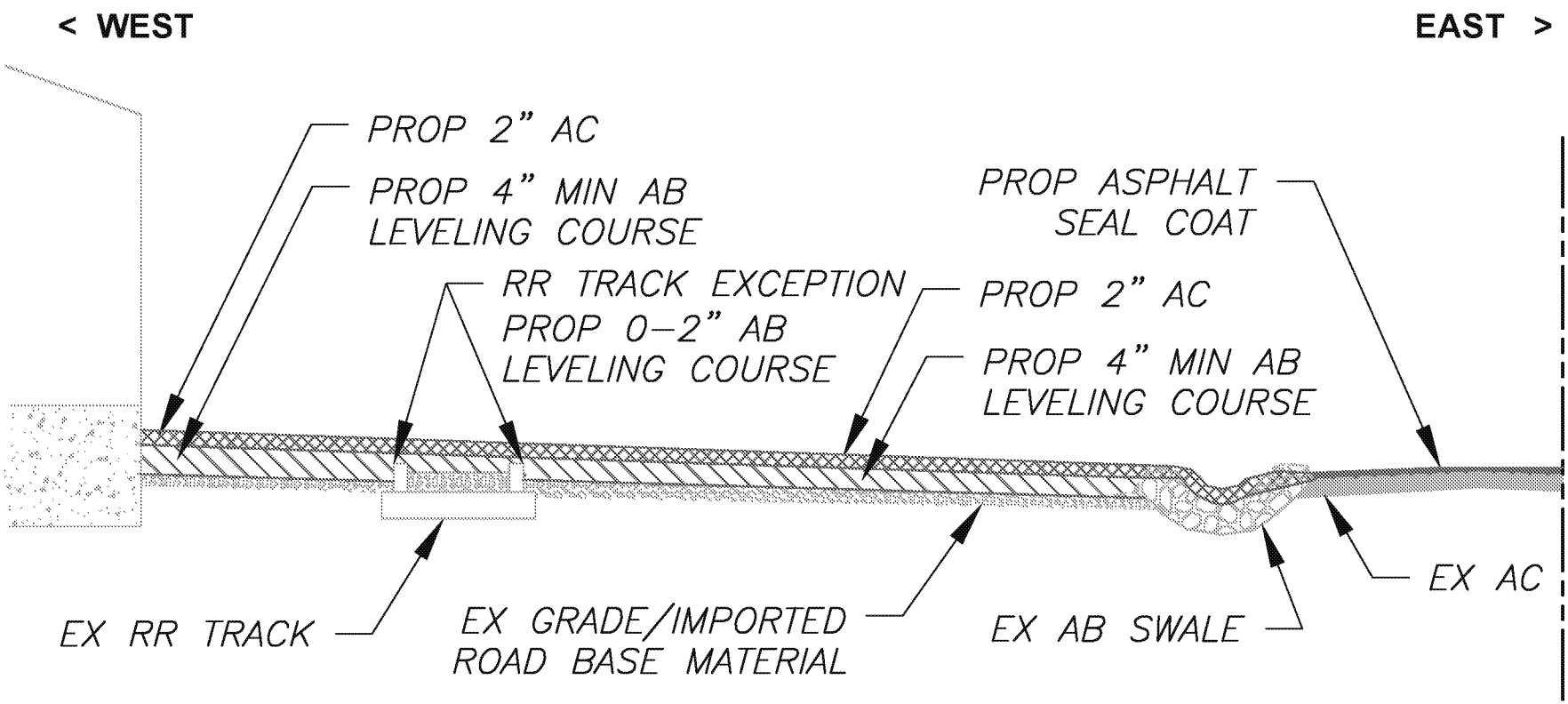

MORRELL STREET

LOOKING NORTH (NOT TO SCALE)

NAVY BASE REALIGNMENT AND CLOSURE PROGRAM
SAN FRANCISCO, CALIFORNIA
PARCEL G, HUNTERS POINT NAVAL SHIPYARD REMEDIAL ACTION WORK PLAN

MORRELL STREET TYPICAL CROSS SECTION

ARCADIS

FIGURE
10

CITY:(Reqd) DIV/GROUP:(Reqd) DB:(Reqd) LD:(Opt) PIC:(Opt) PM:(Reqd) TM:(Opt) LYR:(Opt)ON=";OFF="REF"
G:\Projects\CA000776\Design\Figs\DRAFT RAWP Figs 9-14.dwg LAYOUT: 11 SAVED: 11/15/2012 4:53 PM ACADVER: 18.1S (LMS TECH) PAGESETUP: SETUP1 PLOTSTYLETABLE: LFR STANDARD.CTB PLOTTED: 11/15/2012 4:56 PM BY: OBERBAUER, PAUL
XREFS: IMAGES: PROJECTNAME: ----

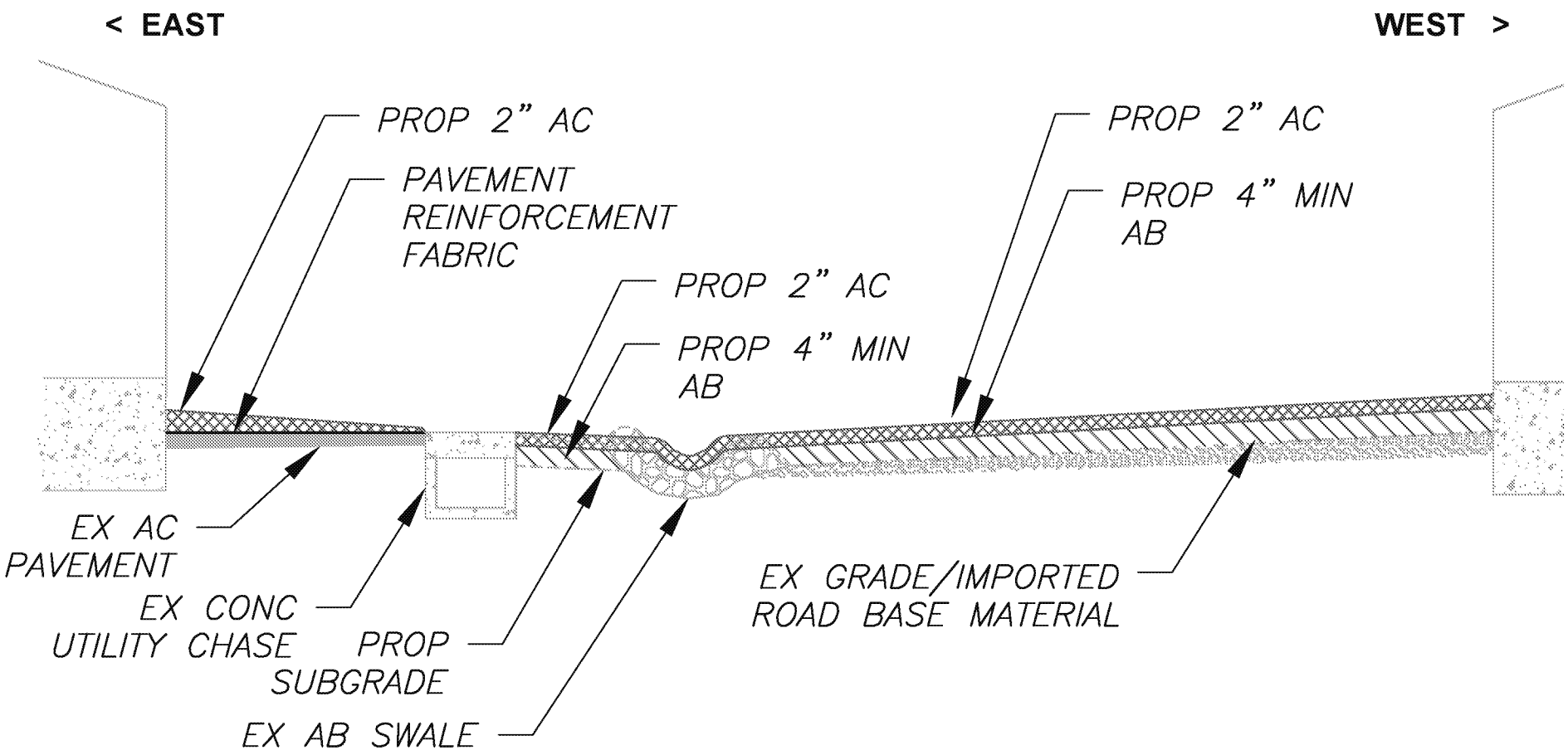

COCHRANE STREET

LOOKING SOUTH (NOT TO SCALE)

NAVY BASE REALIGNMENT AND CLOSURE PROGRAM
SAN FRANCISCO, CALIFORNIA
PARCEL G, HUNTERS POINT NAVAL SHIPYARD
REMEDIAL ACTION WORK PLAN

COCHRANE STREET TYPICAL CROSS SECTION

ARCADIS

FIGURE
11

CITY:(Reqd) DIV/GROUP:(Reqd) DB:(Reqd) LD:(Opt) PIC:(Opt) PM:(Reqd) TM:(Opt) LYR:(Opt)ON=*;OFF=*REF*
G:\Projects\CA000776\Design\Figs\DRAFT RAWP Figs 9-14.dwg LAYOUT: 12 SAVED: 11/15/2012 4:53 PM ACADVER: 18.1S (LMS TECH) PAGESETUP: SETUP1 PLOTSTYLETABLE: LFR STANDARD.CTB PLOTTED: 11/15/2012 4:56 PM BY: OBERBAUER, PAUL
XREFS: IMAGES: PROJECTNAME: ----

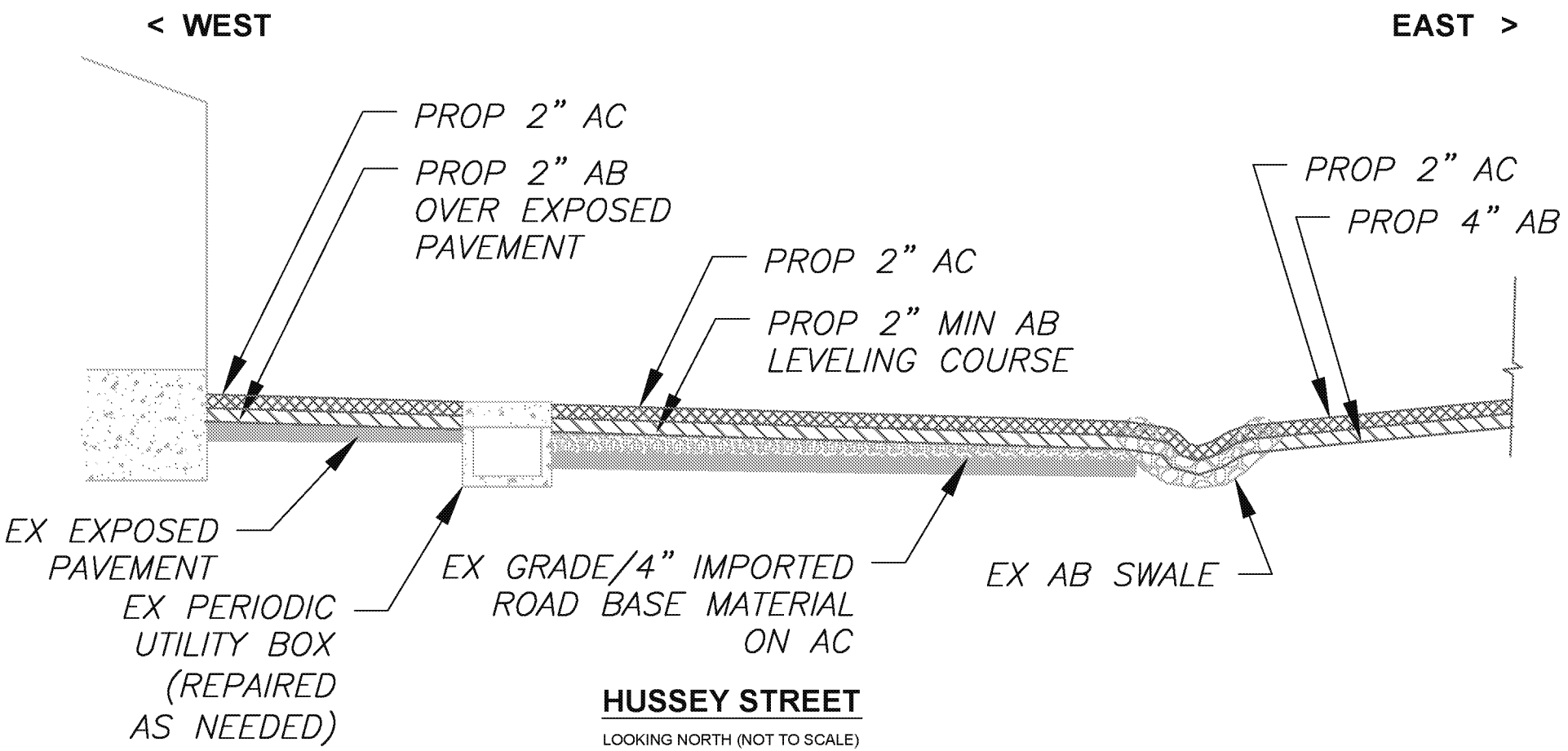

NAVY BASE REALIGNMENT AND CLOSURE PROGRAM
SAN FRANCISCO, CALIFORNIA
PARCEL G, HUNTERS POINT NAVAL SHIPYARD
REMEDIAL ACTION WORK PLAN

HUSSEY STREET TYPICAL CROSS SECTION

ARCADIS

FIGURE
12

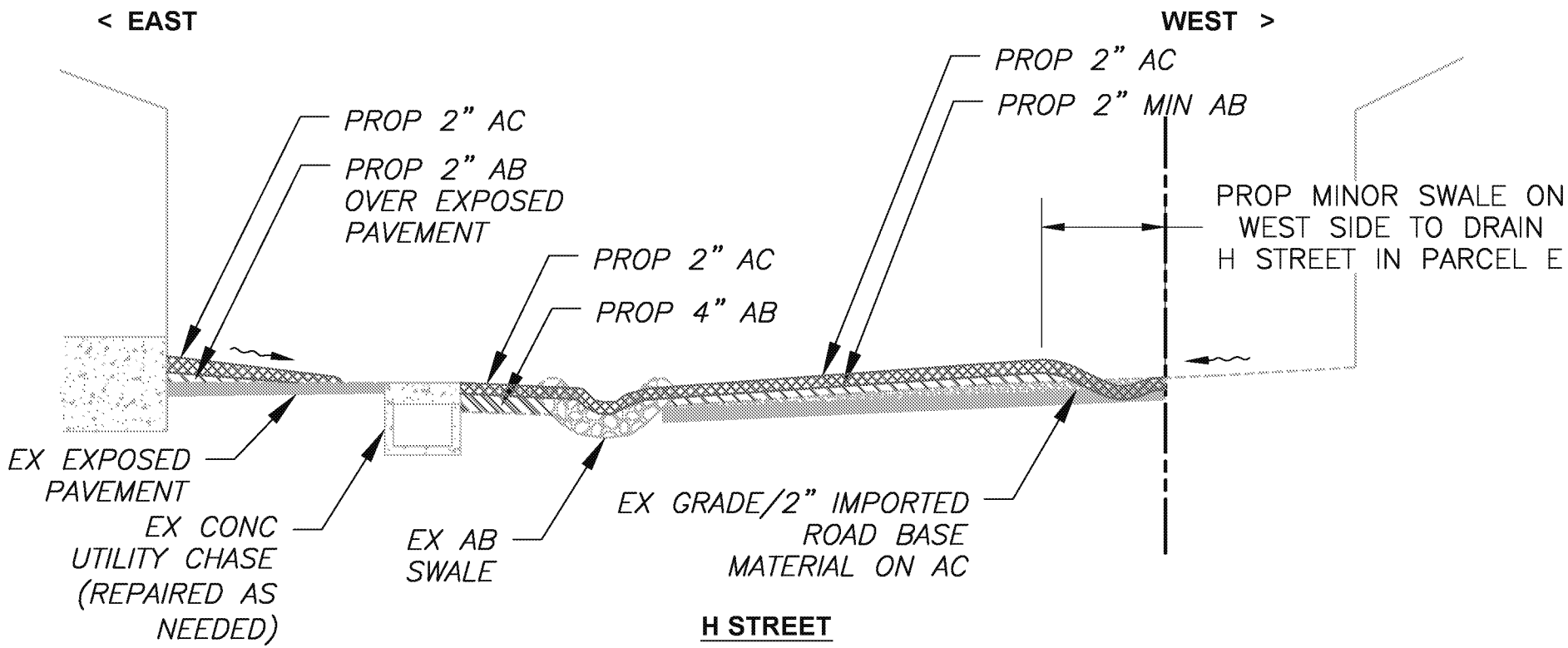

H STREET

LOOKING SOUTH (NOT TO SCALE)

NAVY BASE REALIGNMENT AND CLOSURE PROGRAM
SAN FRANCISCO, CALIFORNIA
PARCEL G, HUNTERS POINT NAVAL SHIPYARD
REMEDIAL ACTION WORK PLAN

H STREET TYPICAL CROSS SECTION

ARCADIS

FIGURE
13

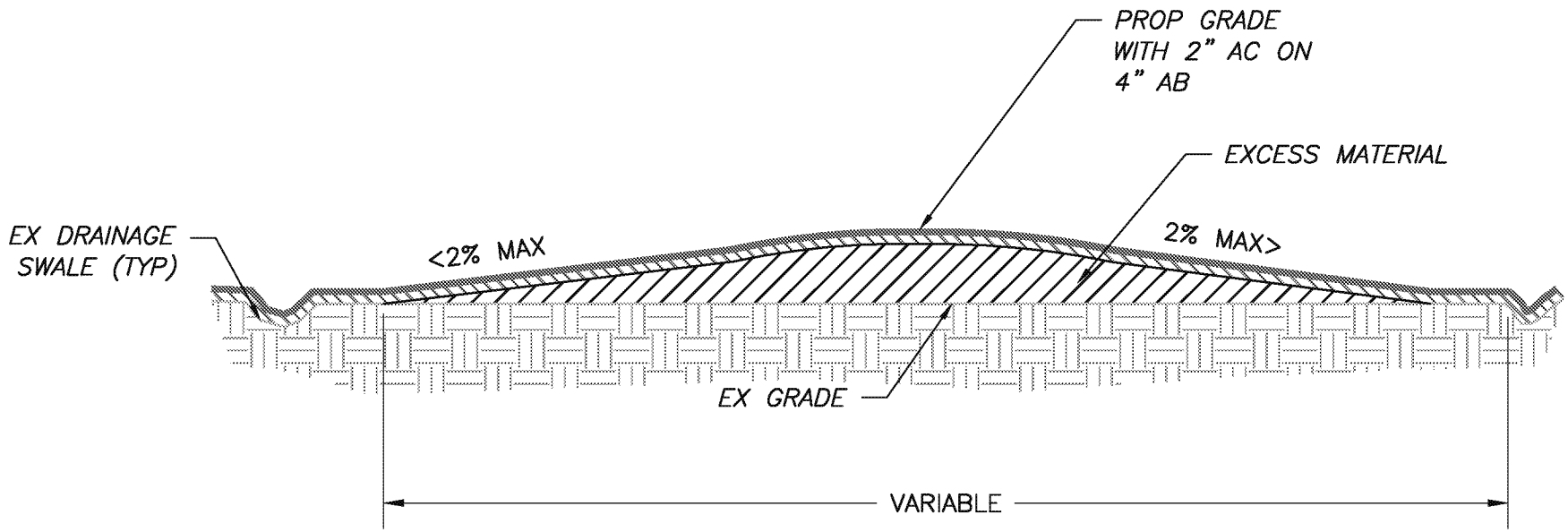

EXCESS MATERIAL GRADING

(SUPPORT ZONE 1, SOUTHEAST CORNER)

NAVY BASE REALIGNMENT AND CLOSURE PROGRAM
SAN FRANCISCO, CALIFORNIA
PARCEL G, HUNTERS POINT NAVAL SHIPYARD
REMEDIAL ACTION WORK PLAN

GRADING SCHEME FOR EXCESS MATERIAL GRADING AREA

ARCADIS

FIGURE
14

ARCADIS

APPENDIX A

Grading, Drainage, and Paving Plan

FINAL
GRADING, DRAINAGE, AND PAVING PLAN

PARCEL G, HUNTERS POINT NAVAL SHIPYARD

SAN FRANCISCO, CA

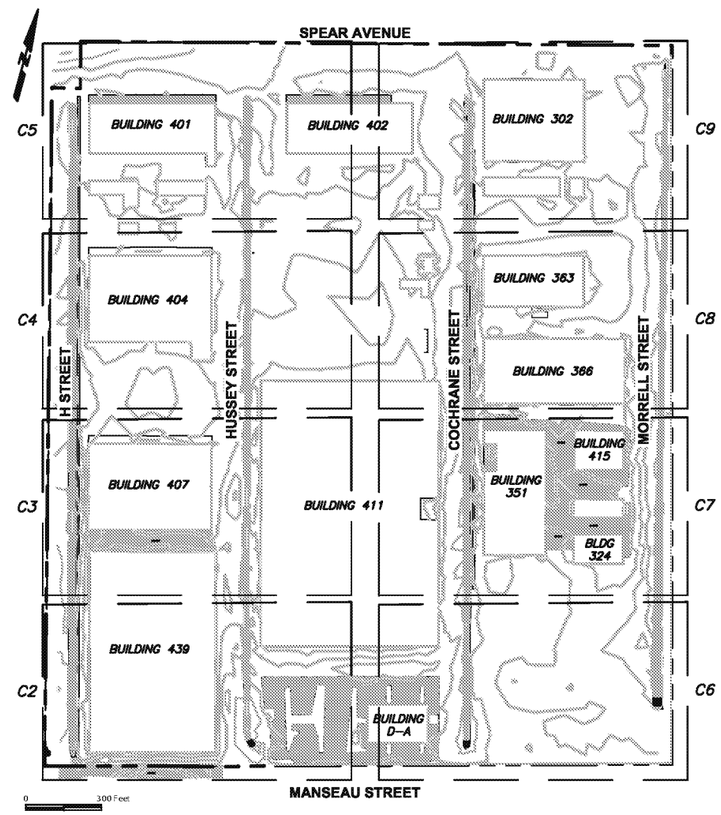

DECEMBER 2012

ARCADIS

ARCADIS U.S., INC.

INDEX TO DRAWINGS

C1	COVER
C2	SOUTH WESTERN AREA
C3	CENTER SOUTH WESTERN AREA
C4	CENTER NORTH WESTERN AREA
C5	NORTH WESTERN AREA
C6	NORTH EASTERN AREA
C7	CENTER NORTH EASTERN AREA
C8	CENTER SOUTH EASTERN AREA
C9	SOUTH EASTERN AREA

CITY: DIV/GROUP: DB: LD: PIC: PM: TM: LYR:ON=*;OFF=*REF*
G:\Projects\CA000776\Design\Grading Drainage Paving Plan.dwg LAYOUT: C1REP SAVED: 12/10/2012 12:02 PM ACADVER: 18.1S (LMS TECH) PAGESETUP: ANSI D (B) PLOTSTYLETABLE: LFR STANDARD.CTB PLOTTED: 12/10/2012 12:03 PM BY: OBERBAUER, PAUL

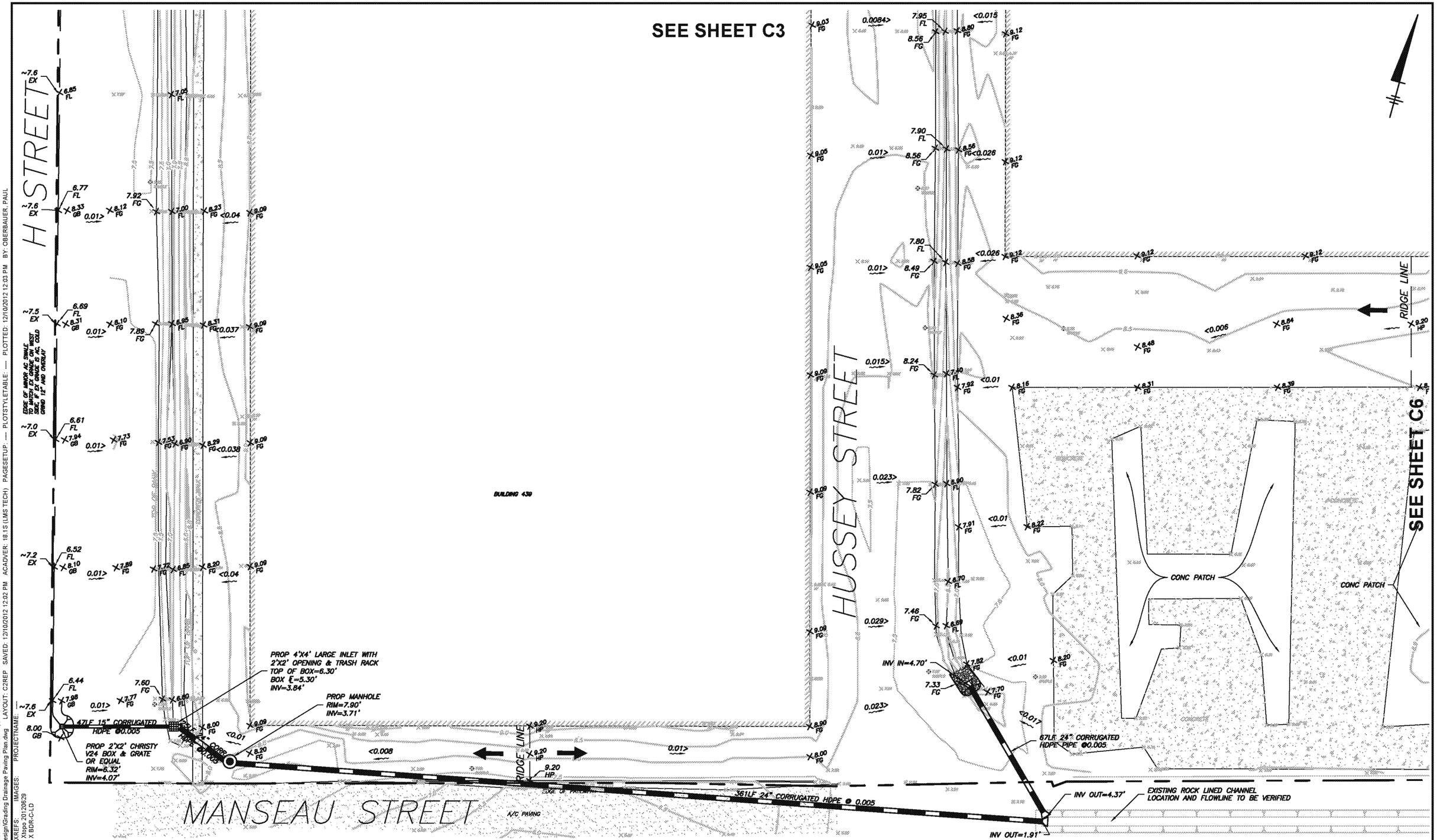

CITY: DIV/GROUP: DB: LD: PIC: PM: TM: LYR:ON=*;OFF=*REF*
G:\Projects\CA000776\Design\Grading Drainage Paving Plan.dwg LAYOUT: C2REP SAVED: 12/10/2012 12:02 PM ACADVER: 18.1S (LMS TECH) PAGESETUP: ---- PLOTSTYLETABLE: ---- PLOTTED: 12/10/2012 12:03 PM BY: OBERBAUER, PAUL
XREFS: Xtopo 20120629 X BDR-C-LD IMAGES: PROJECTNAME:

40' 0 40' 80'
1"=40'

THIS BAR REPRESENTS ONE INCH ON THE ORIGINAL DRAWING. USE TO VERIFY FIGURE REPRODUCTION SCALE

No.	Date	Revisions	By	Ckd

THIS DRAWING IS THE PROPERTY OF THE ARCADIS ENTITY IDENTIFIED IN THE TITLE BLOCK AND MAY NOT BE REPRODUCED OR ALTERED IN WHOLE OR IN PART WITHOUT THE EXPRESS WRITTEN PERMISSION OF SAME

Professional Engineer's Name: WILLIAM BEAMAN
Professional Engineer's No.: C 53930
State: CA | Date Signed | Project Mgr.
Designed by: WBB | Drawn by: NRC | Checked by: WBB

ARCADIS
ARCADIS U.S., INC.

HUNTERS POINT - PARCEL G • SAN FRANCISCO, CA
GRADING, DRAINAGE, AND PAVING PLAN

SOUTH WESTERN AREA

ARCADIS Project No. CA000776.0002.00002
Date DECEMBER, 2012

ARCADIS-US, INC.
2000 POWELL STREET
SUITE 700
EMERYVILLE, CA
TEL. 510.652.4500

C2

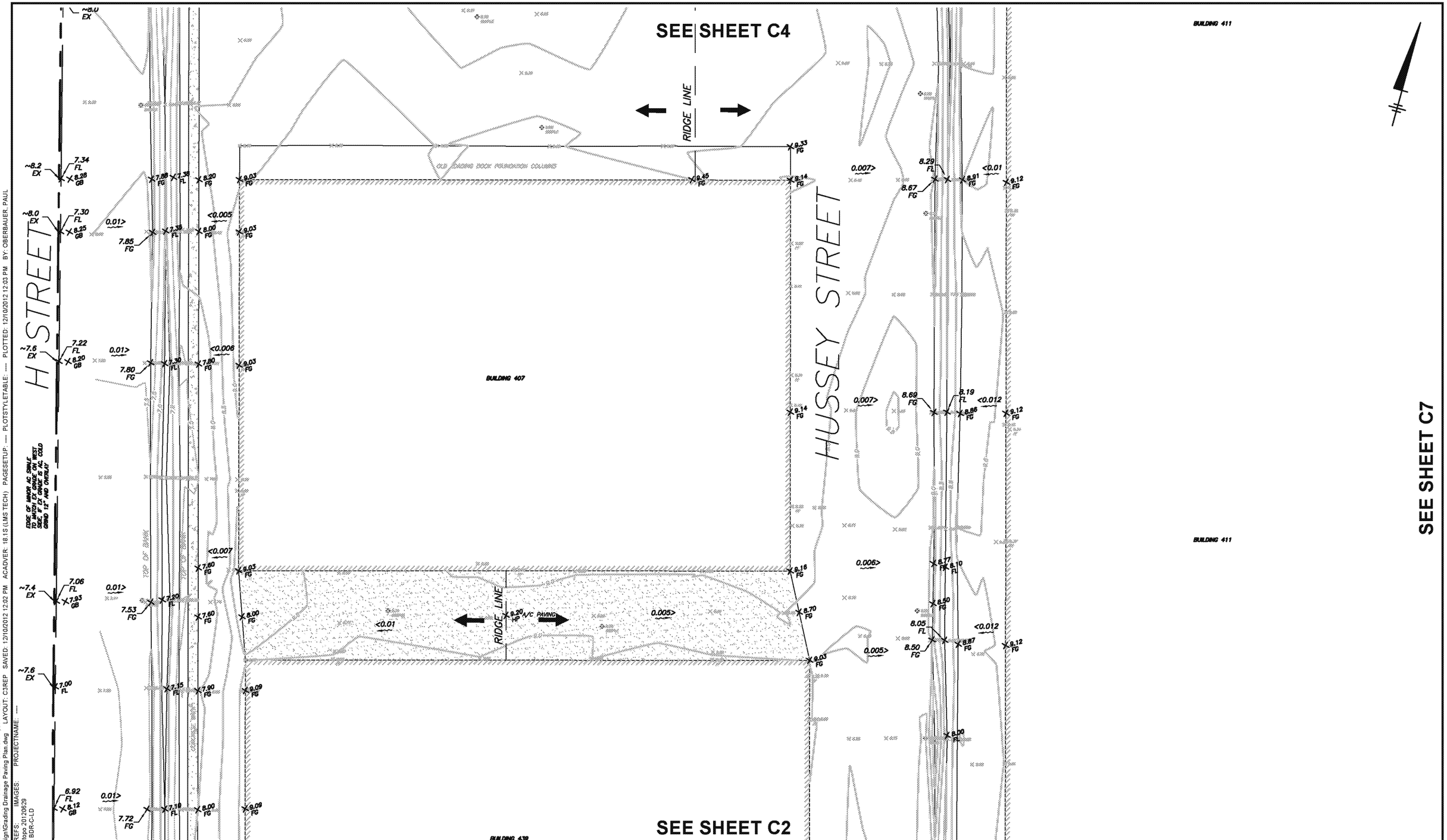

40' 0 40' 80'
1"=40'

THIS BAR REPRESENTS ONE INCH ON THE ORIGINAL DRAWING.

USE TO VERIFY FIGURE REPRODUCTION SCALE

No.	Date	Revisions	By	Ckd

THIS DRAWING IS THE PROPERTY OF THE ARCADIS ENTITY IDENTIFIED IN THE TITLE BLOCK AND MAY NOT BE REPRODUCED OR ALTERED IN WHOLE OR IN PART WITHOUT THE EXPRESS WRITTEN PERMISSION OF SAME.

Professional Engineer's Name: WILLIAM BEAMAN
Professional Engineer's No.: C 53930
State: CA | Date Signed: | Project Mgr.:
Designed by: WBB | Drawn by: NRC | Checked by: WBB

ARCADIS
ARCADIS U.S., INC.

HUNTERS POINT - PARCEL G • SAN FRANCISCO, CA
GRADING, DRAINAGE, AND PAVING PLAN

CENTER SOUTH WESTERN AREA

ARCADIS Project No. CA000776.0002.00002
Date DECEMBER, 2012

ARCADIS-US, INC.
2000 POWELL STREET
SUITE 700
EMERYVILLE, CA
TEL. 510.652.4500

C3

CITY: DIV/GROUP: DB: LD: PIC: PIC: PM: TM: LYR:ON="OFF"="REF"
G:\Projects\CA000776\Design\Grading Drainage Paving Plan.dwg LAYOUT: C3REP SAVED: 12/10/2012 12:02 PM ACADVER: 18.1S (LMS TECH) PAGESETUP: ---- PLOTSTYLETABLE: ---- PLOTTED: 12/10/2012 12:03 PM BY: OBERBAUER, PAUL
XREFS: IMAGES: PROJECTNAME: ----
Xtopo 20120629
X BDR-C-LD

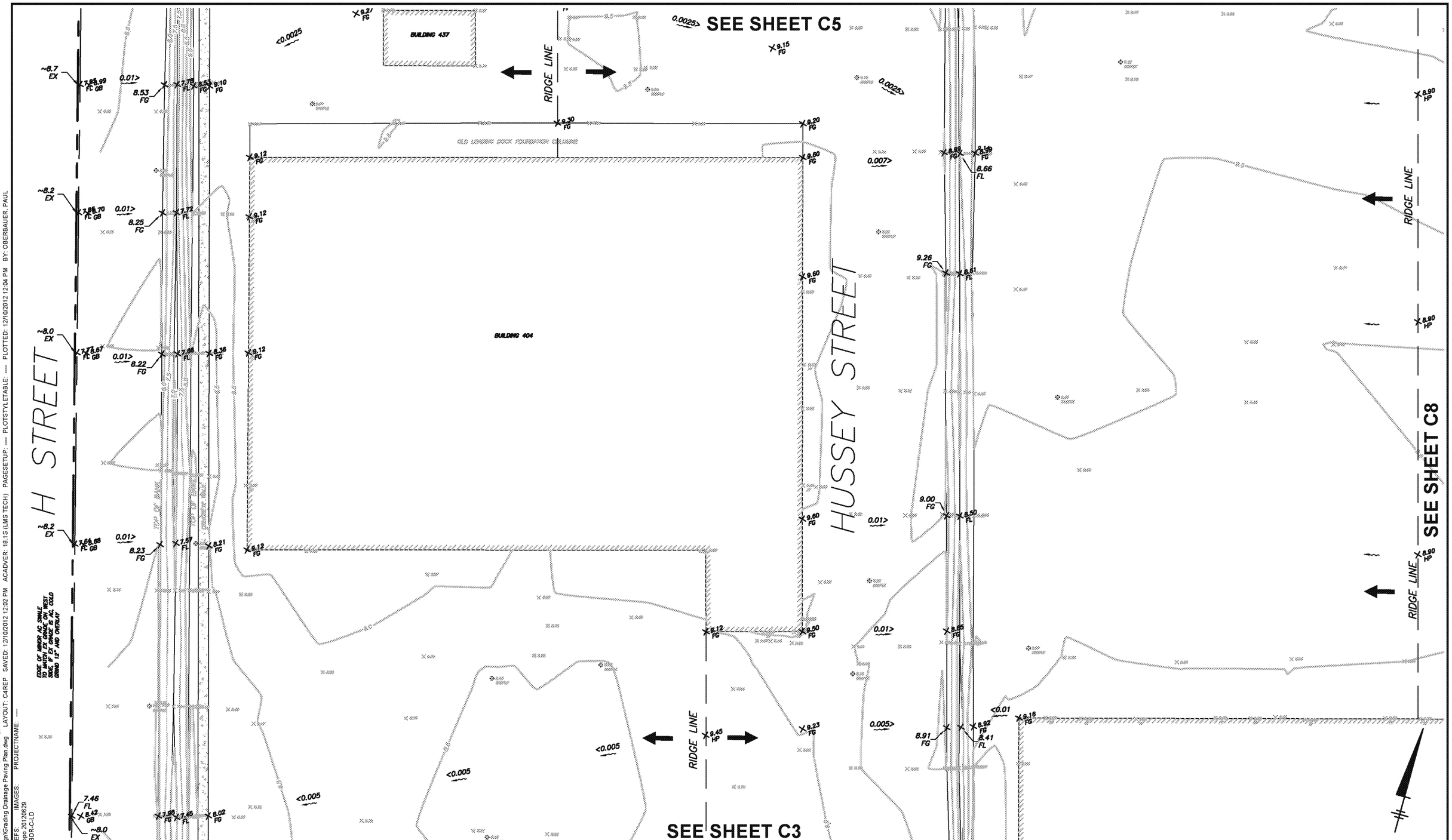

CITY: DIV/GROUP: DB: LD: PIC: PM: TM: LYR:ON="OFF="REF"
G:\Projects\CA000776\Design\Grading Drainage Paving Plan.dwg LAYOUT: C4REP SAVED: 12/10/2012 12:02 PM ACADVER: 18.1S (LMS TECH) PAGESETUP: ---- PLOTSTYLETABLE: ---- PLOTTED: 12/10/2012 12:04 PM BY: OBERBAUER, PAUL
XREFS: IMAGES: PROJECTNAME: ----
Xlopp 20120629
X BDR-C-LD

40' 0 40' 80'
1"=40'

THIS BAR REPRESENTS ONE INCH ON THE ORIGINAL DRAWING.

USE TO VERIFY FIGURE REPRODUCTION SCALE.

No.	Date	Revisions	By	Ckd

THIS DRAWING IS THE PROPERTY OF THE ARCADIS ENTITY IDENTIFIED IN THE TITLE BLOCK AND MAY NOT BE REPRODUCED OR ALTERED IN WHOLE OR IN PART WITHOUT THE EXPRESS WRITTEN PERMISSION OF SAME.

Professional Engineer's Name: WILLIAM BEAMAN
Professional Engineer's No.: C 53930
State: CA | Date Signed: | Project Mgr.:
Designed by: WBB | Drawn by: NRC | Checked by: WBB

ARCADIS
ARCADIS U.S., INC.

HUNTERS POINT - PARCEL G • SAN FRANCISCO, CA
GRADING, DRAINAGE, AND PAVING PLAN

CENTER NORTH WESTERN AREA

ARCADIS Project No.
CA000776.0002.00002

Date
DECEMBER, 2012

ARCADIS-US, INC.
2000 POWELL STREET
SUITE 700
EMERYVILLE, CA
TEL: 510.652.4500

C4

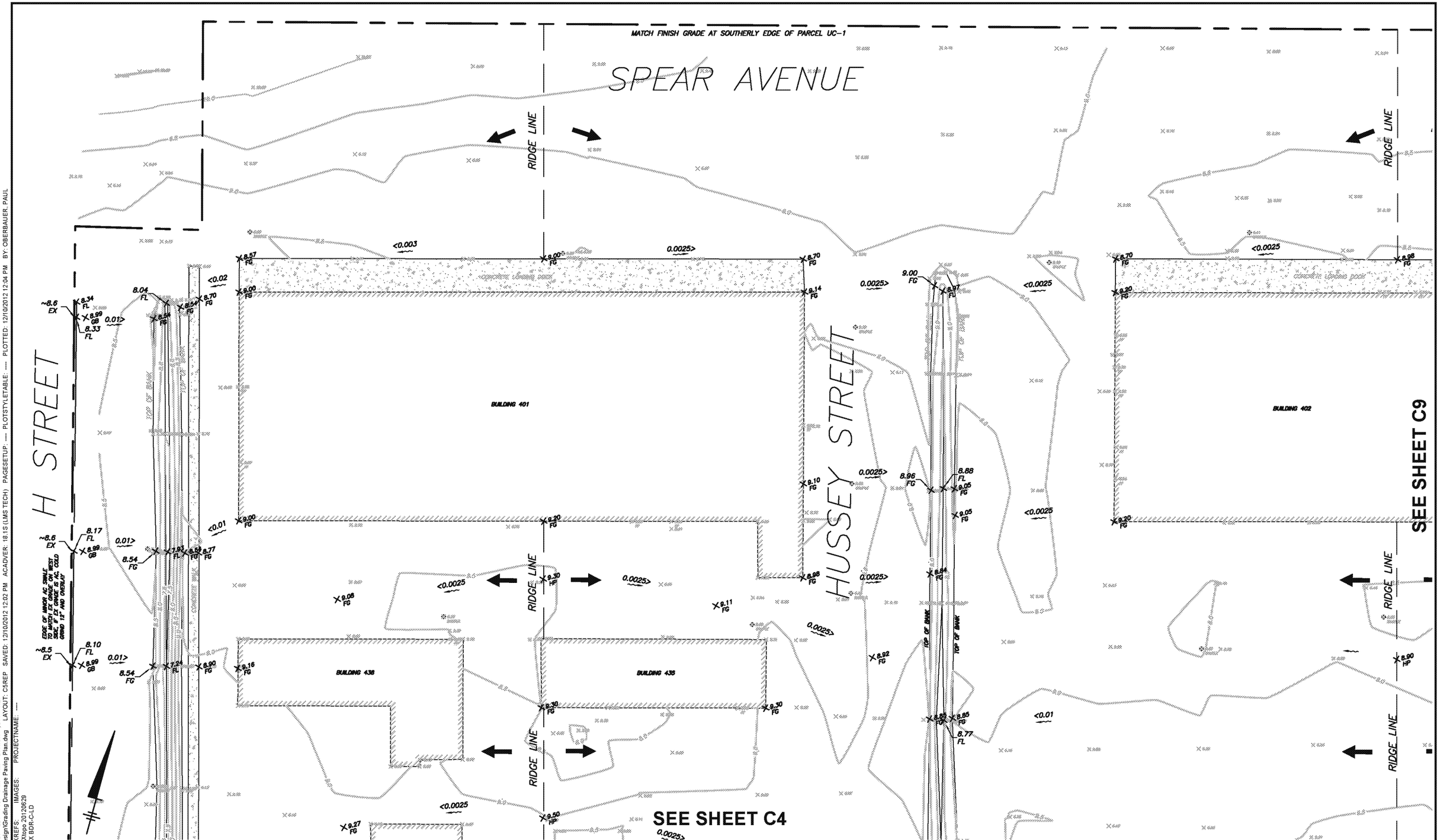

40' 0 40' 80'
1"=40'

THIS BAR REPRESENTS ONE INCH ON THE ORIGINAL DRAWING.

USE TO VERIFY FIGURE REPRODUCTION SCALE

No.	Date	Revisions	By	Ckd

THIS DRAWING IS THE PROPERTY OF THE ARCADIS ENTITY IDENTIFIED IN THE TITLE BLOCK AND MAY NOT BE REPRODUCED OR ALTERED IN WHOLE OR IN PART WITHOUT THE EXPRESS WRITTEN PERMISSION OF SAME.

Professional Engineer's Name: WILLIAM BEAMAN
Professional Engineer's No.: C 53930
State: CA | Date Signed: | Project Mgr.:
Designed by: WBB | Drawn by: NRC | Checked by: WBB

ARCADIS
ARCADIS U.S., INC.

HUNTERS POINT - PARCEL G • SAN FRANCISCO, CA
GRADING, DRAINAGE, AND PAVING PLAN

NORTH WESTERN AREA

ARCADIS Project No. CA000776.0002.00002
Date DECEMBER, 2012

ARCADIS-US, INC.
2000 POWELL STREET
SUITE 700
EMERYVILLE, CA
TEL. 510.652.4500

C5

CITY: DIV/GROUP: DB: LD: PIC: PM: TM: LYR:ON=*;OFF=*REF*
G:\Projects\CA000776\Design\Grading Drainage Paving Plan.dwg LAYOUT: C5REP SAVED: 12/10/2012 12:02 PM ACADVER: 18.1S (LMS TECH) PAGESETUP: ---- PLOTSTYLETABLE: ---- PLOTTED: 12/10/2012 12:04 PM BY: OBERBAUER, PAUL
XREFS: X topo 20120629 X BDR-C-LD IMAGES: PROJECTNAME: ----

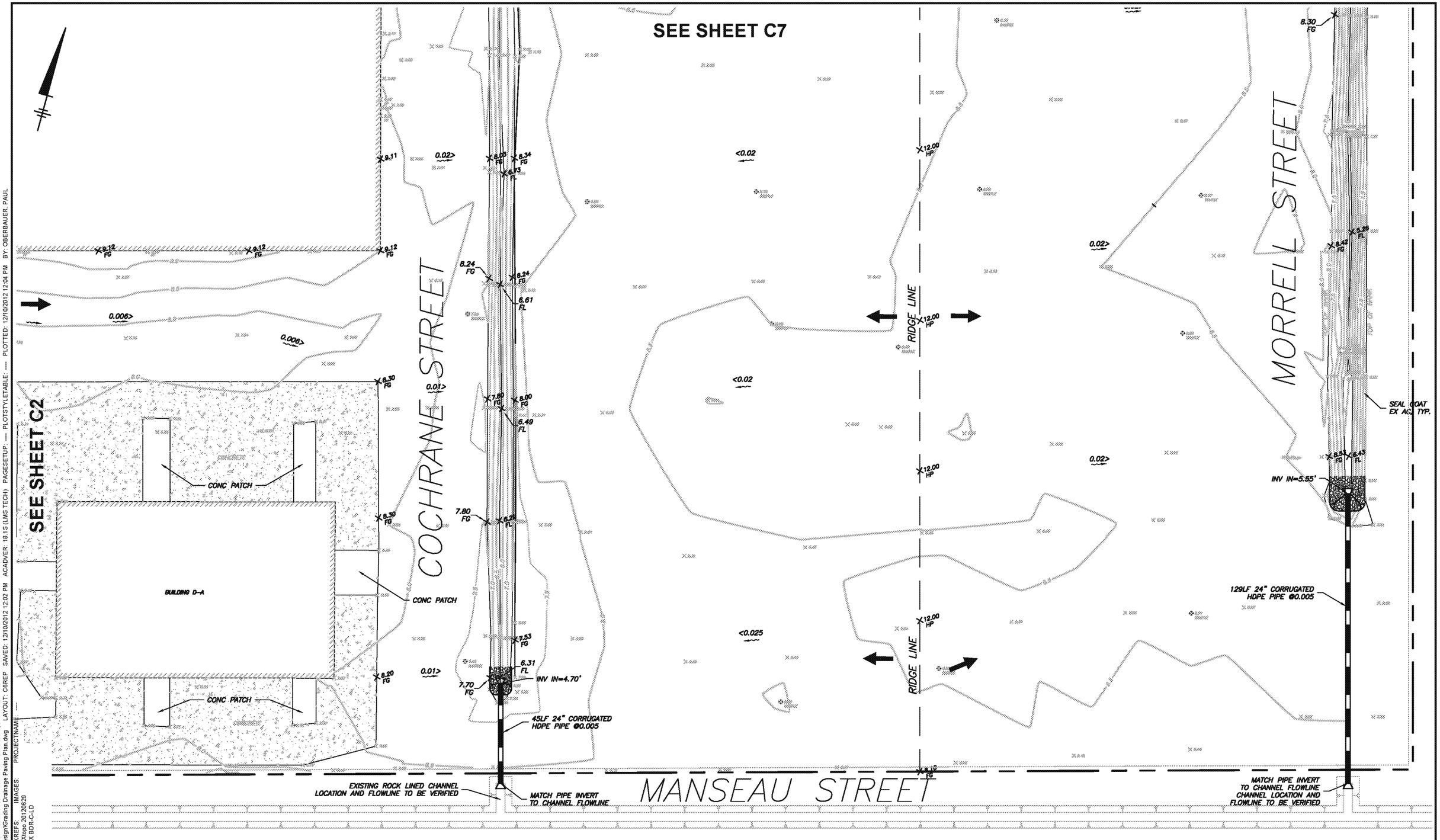

CITY: DIV/GROUP: DB: LD: PIC: PM: TM: LYR:ON=*;OFF=*REF*
G:\Projects\CA000776\Design\Grading Drainage Paving Plan.dwg LAYOUT: C6REP SAVED: 12/10/2012 12:02 PM ACADVER: 18.1S (LMS TECH) PAGESETUP: ---- PLOTSTYLETABLE: ---- PLOTTED: 12/10/2012 12:04 PM BY: OBERBAUER, PAUL
PROJECTNAME: ---
XREFS: X:topo 20120629 X:BDR-C-LD IMAGES:

40' 0 40' 80'
1"=40'

THIS BAR REPRESENTS ONE INCH ON THE ORIGINAL DRAWING.

USE TO VERIFY FIGURE REPRODUCTION SCALE

No.	Date	Revisions	By	Ckd

THIS DRAWING IS THE PROPERTY OF THE ARCADIS ENTITY IDENTIFIED IN THE TITLE BLOCK AND MAY NOT BE REPRODUCED OR ALTERED IN WHOLE OR IN PART WITHOUT THE EXPRESS WRITTEN PERMISSION OF SAME.

Professional Engineer's Name: WILLIAM BEAMAN
Professional Engineer's No.: C 53930
State: CA | Date Signed: | Project Mgr.:
Designed by: WBB | Drawn by: NRC | Checked by: WBB

ARCADIS
ARCADIS U.S., INC.

HUNTERS POINT - PARCEL G • SAN FRANCISCO, CA
GRADING, DRAINAGE, AND PAVING PLAN

SOUTH EASTERN AREA

ARCADIS Project No. CA000776.0002.00002
Date DECEMBER, 2012

ARCADIS-US, INC.
2000 POWELL STREET
SUITE 700
EMERYVILLE, CA
TEL. 510.652.4500

C6

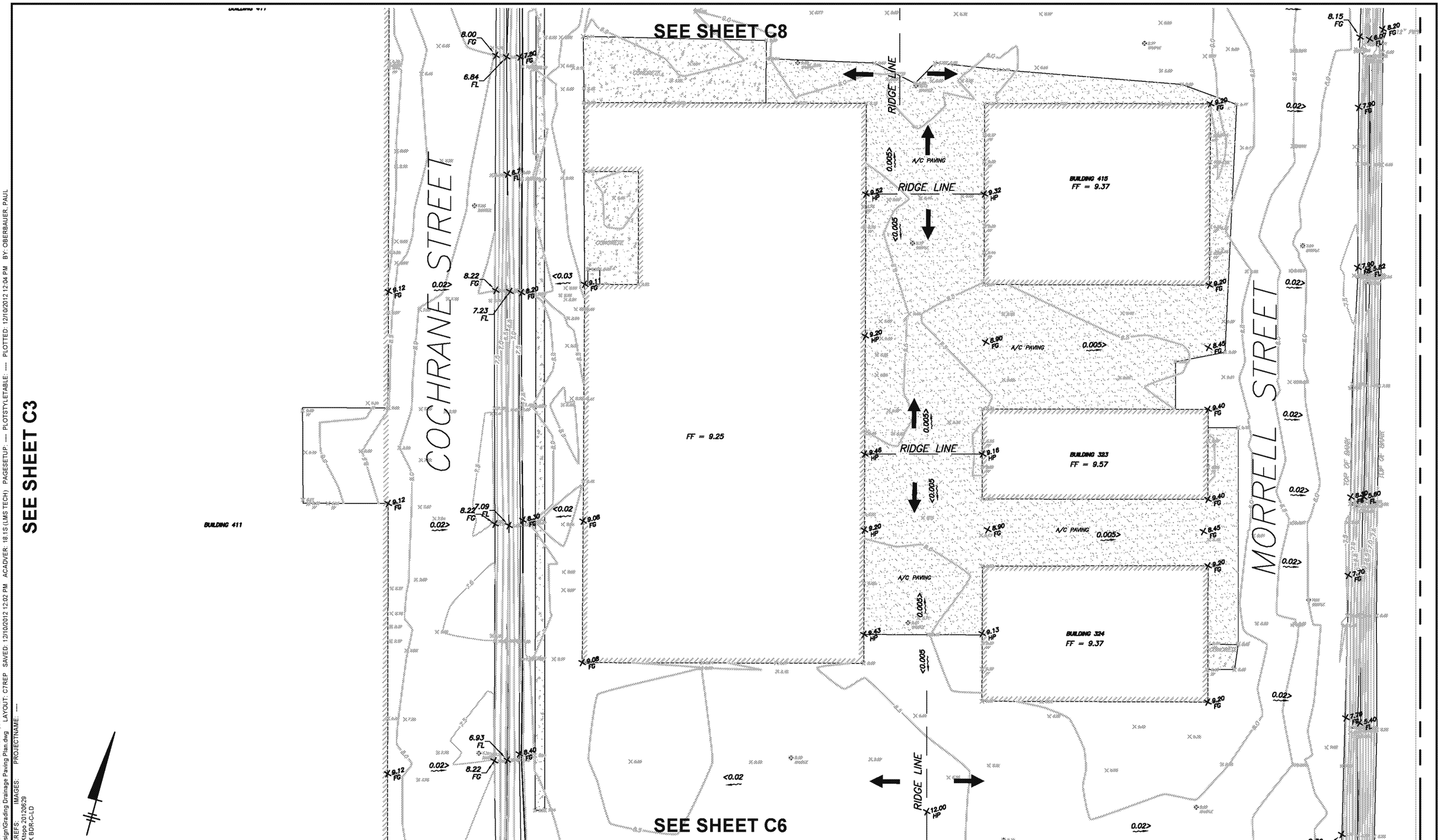

CITY: DIV/GROUP: DB: LD: PIC: PM: TM: LYR:ON="OFF=*REF*
G:\Projects\CA000776\Design\Grading Drainage Paving Plan.dwg LAYOUT: C7REP SAVED: 12/10/2012 12:02 PM ACADVER: 18.1S (LMS TECH) PAGESETUP: ---- PLOTSTYLETABLE: ---- PLOTTED: 12/10/2012 12:04 PM BY: OBERBAUER, PAUL
XREFS: IMAGES: PROJECTNAME: ----
Xtopo 20120629
X BDR-C-LD

40' 0 40' 80'
1"=40'

THIS BAR REPRESENTS ONE INCH ON THE ORIGINAL DRAWING.

USE TO VERIFY FIGURE REPRODUCTION SCALE

No.	Date	Revisions	By	Ckd

THIS DRAWING IS THE PROPERTY OF THE ARCADIS ENTITY IDENTIFIED IN THE TITLE BLOCK AND MAY NOT BE REPRODUCED OR ALTERED IN WHOLE OR IN PART WITHOUT THE EXPRESS WRITTEN PERMISSION OF SAME.

Professional Engineer's Name: WILLIAM BEAMAN
Professional Engineer's No.: C 53930
State: CA | Date Signed: | Project Mgr.:
Designed by: WBB | Drawn by: NRC | Checked by: WBB

ARCADIS
ARCADIS U.S., INC.

HUNTERS POINT - PARCEL G • SAN FRANCISCO, CA
GRADING, DRAINAGE, AND PAVING PLAN

CENTER SOUTH EASTERN AREA

ARCADIS Project No. CA000776.0002.00002
Date DECEMBER, 2012

ARCADIS-US, INC.
2000 POWELL STREET
SUITE 700
EMERYVILLE, CA
TEL. 510.652.4500

C7

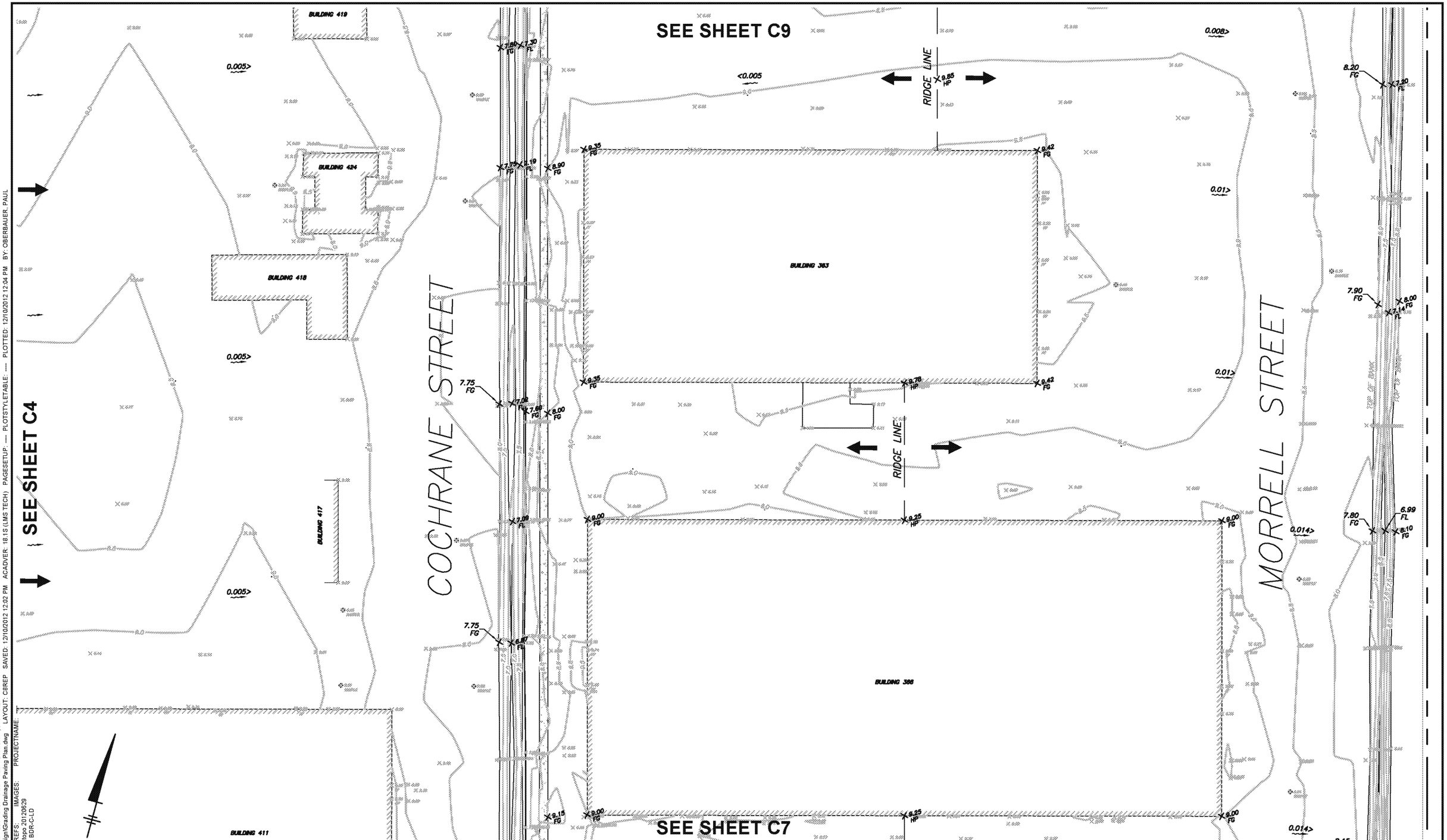

CITY: DIV/GROUP: DB: LD: PIC: PM: TM: LYR:ON=*;OFF=*REF*
G:\Projects\CA000776\Design\Grading Drainage Paving Plan.dwg LAYOUT: C8REP SAVED: 12/10/2012 12:02 PM ACADVER: 18.1S (LMS TECH) PAGESETUP: ---- PLOTSTYLETABLE: ---- PLOTTED: 12/10/2012 12:04 PM BY: OBERBAUER, PAUL

XREFS: IMAGES: PROJECTNAME:
Xtopo 20120629
X BDR-C-LD

40' 0 40' 80'
1"=40'

THIS BAR REPRESENTS ONE INCH ON THE ORIGINAL DRAWING.

USE TO VERIFY FIGURE REPRODUCTION SCALE

No.	Date	Revisions	By	Ckd

THIS DRAWING IS THE PROPERTY OF THE ARCADIS ENTITY IDENTIFIED IN THE TITLE BLOCK AND MAY NOT BE REPRODUCED OR ALTERED IN WHOLE OR IN PART WITHOUT THE EXPRESS WRITTEN PERMISSION OF SAME.

Professional Engineer's Name: WILLIAM BEAMAN
Professional Engineer's No.: C 53930
State: CA
Date Signed:
Project Mgr.:
Designed by: WBB
Drawn by: NRC
Checked by: WBB

ARCADIS
ARCADIS U.S., INC.

HUNTERS POINT - PARCEL G • SAN FRANCISCO, CA
GRADING, DRAINAGE, AND PAVING PLAN

CENTER NORTH EASTERN AREA

ARCADIS Project No.
CA000776.0002.00002

Date
DECEMBER, 2012

ARCADIS-US, INC.
2000 POWELL STREET
SUITE 700
EMERYVILLE, CA
TEL. 510.652.4500

C8

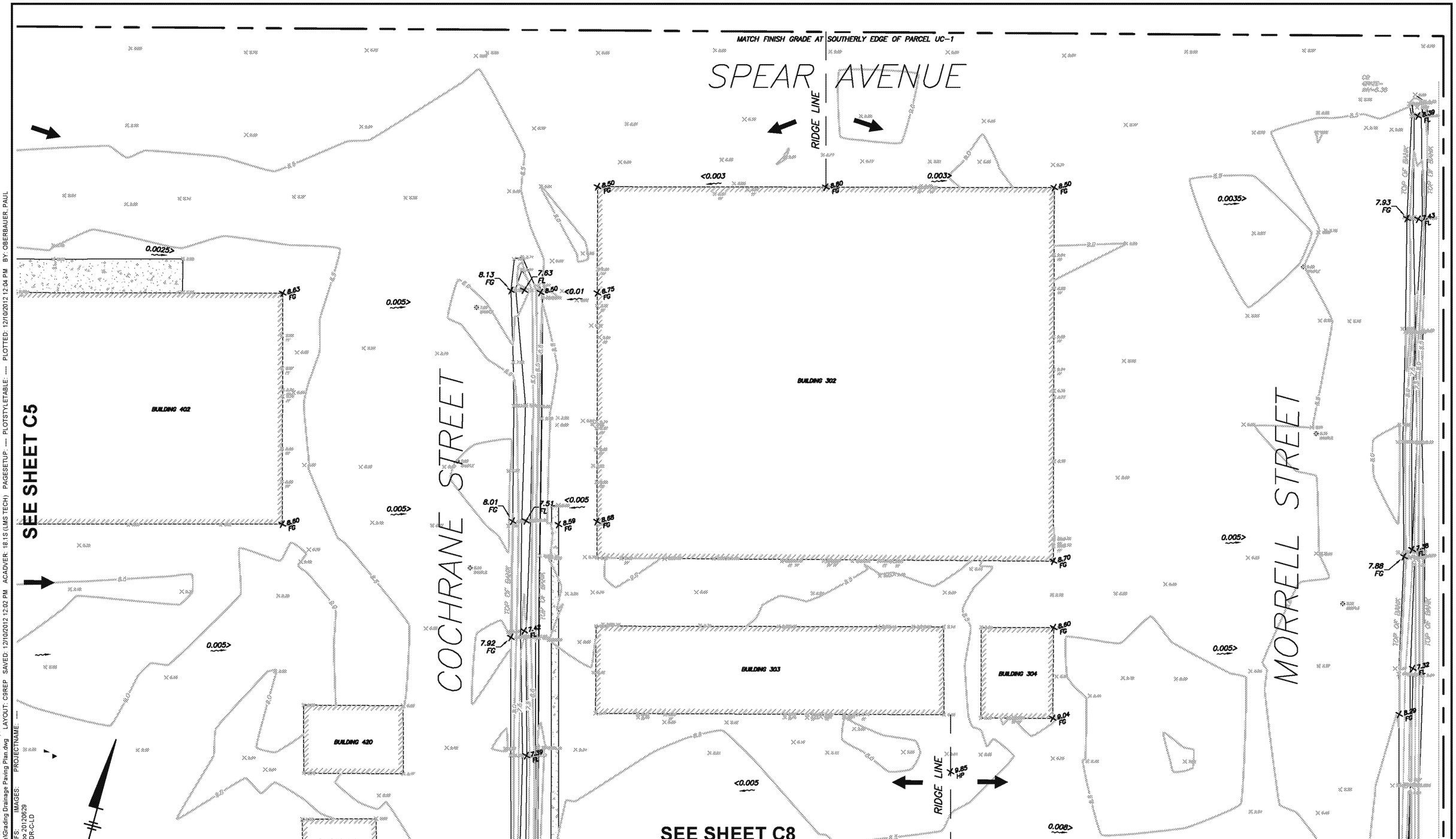

CITY: DIV/GROUP: DB: LD: PIC: PM: TM: LYR:ON=*;OFF=*REF*
G:\Projects\CA000776\Design\Grading Drainage Paving Plan.dwg LAYOUT: C9REP SAVED: 12/10/2012 12:02 PM ACADVER: 18.1S (LMS TECH) PAGESETUP: ---- PLOTSTYLETABLE: ---- PLOTTED: 12/10/2012 12:04 PM BY: OBERBAUER, PAUL
XREFS: IMAGES: PROJECTNAME: ----
Xlopo 20120629
X BDR-C-LD

40' 0 40' 80'
1"=40'

THIS BAR REPRESENTS ONE INCH ON THE ORIGINAL DRAWING.

USE TO VERIFY FIGURE REPRODUCTION SCALE

No.	Date	Revisions	By	Ckd

THIS DRAWING IS THE PROPERTY OF THE ARCADIS ENTITY IDENTIFIED IN THE TITLE BLOCK AND MAY NOT BE REPRODUCED OR ALTERED IN WHOLE OR IN PART WITHOUT THE EXPRESS WRITTEN PERMISSION OF SAME

Professional Engineer's Name: WILLIAM BEAMAN
Professional Engineer's No.: C 53930
State: CA | Date Signed: | Project Mgr.:
Designed by: WBB | Drawn by: NRC | Checked by: WBB

ARCADIS
ARCADIS U.S., INC.

HUNTERS POINT - PARCEL G • SAN FRANCISCO, CA
GRADING, DRAINAGE, AND PAVING PLAN

NORTH EASTERN AREA

ARCADIS Project No. CA000776.0002.00002
Date DECEMBER, 2012

ARCADIS-US, INC.
2000 POWELL STREET
SUITE 700
EMERYVILLE, CA
TEL. 510.652.4500

C9

ARCADIS

APPENDIX B

Contractor Quality Control Plan

Department of the Navy
Base Realignment and Closure Program
Management Office West

FINAL
Appendix B
Contractor Quality Control Plan for Parcel G, Hunters Point Naval Shipyard, San Francisco, California

December 2012

ARCADIS

David Gomes
Contractor Quality Control Manager

Scott Morris, PE
Project Manager

FINAL Appendix B
Contractor Quality Control Plan for Parcel G, Hunters Point Naval Shipyard, San Francisco, California

Prepared for:
Department of the Navy
Base Realignment and Closure Program
Management Office West

Prepared by:
ARCADIS U.S., Inc.
9095 Rio San Diego Drive
#240
San Diego
California 92108
Tel 619 291 7800
Fax 619 291 5400

Our Ref.:
CA000776.0002.00002

Date:
December 2012

This document is intended only for the use of the individual or entity for which it was prepared and may contain information that is privileged, confidential and exempt from disclosure under applicable law. Any dissemination, distribution or copying of this document is strictly prohibited.

Acronyms and Abbreviations **1**

1. Introduction **2**

2. Quality Control Organization **3**

2.1 Project Manager 4

2.2 Field Superintendent 5

2.3 Contractor Quality Control Manager 5

2.4 Site Safety and Health Officer 8

2.5 Corporate Health and Safety Manager 8

3. Appointment Letters **9**

4. List of Definable Features of Work **9**

5. Three-Phase Control Procedures **9**

5.1 Preparatory Phase 10

5.2 Initial Phase 11

5.3 Follow-Up Phase 12

6. Testing Plan and Log **13**

6.1 Verification of Testing Procedures 13

6.2 Testing Results Documentation 14

7. Submittal Management Procedures **14**

7.1 Submittal and Records Management 15

7.2 Reviewing and Certifying Submittals 15

7.3 Submittal Scheduling 16

7.4 Review of Plans and Specifications 17

7.5 Submittal Register 17

7.6 Transmittal of Submittals 19

7.7 Submittals of Vendors and Subcontractors 19

7.8 Location of Documents 19

8. Procedures for Tracking Identification and Correction of Construction Deficiencies 20

8.1 Documenting Deficiencies and Corrective Actions 20

8.2 Tracking Deficiencies 21

8.3 Stop Work Authority 21

9. Documentation and Reporting Procedures 22

9.1 Daily Contractor Production Report 23

9.2 Daily Contractor Quality Control Report 24

9.3 Quality Control Specialist Reports 26

9.4 Weekly Quality Control Meeting Minutes 26

9.5 Preparatory Phase Checklist 27

9.6 Initial Phase Checklist 28

9.7 Field Test Reports 29

9.8 Testing Plan and Log 29

9.9 Rework Items List 29

9.10 As-Built Drawing 30

9.11 Quality Control Binders On Site 30

10. Procedures for Completion Inspections 30

10.1 Punch-Out Inspection 31

10.2 Pre-Final Inspection 31

10.3 Final Acceptance Inspection 31

10.4 Inspection Documentation 31

11. References 32

Tables

1 Definable Features of Work for Project Activities

Figures

1 Project Organization Chart

Appendices

A Personnel Qualifications and QC Training Certificates

B Letters of Appointment

C Quality Control Forms

D Testing Plan and Log

E Submittal Register

Acronyms and Abbreviations

AHA	Activity Hazard Analysis
APP	Accident Prevention Plan
ARCADIS	ARCADIS U.S., Inc.
CM	Construction Manager
CQC	Contractor Quality Control
DFOWs	definable features of work
FS	Field Superintendent
H&S	Health and Safety
HSM	Health and Safety Manager
KO	Contracting Officer
Navy	Department of the Navy
PM	Project Manager
QC	quality control
RFIs	requests for information
ROICC	Resident Officer in Charge of Construction
SSHP	Site Safety and Health Plan

1. Introduction

This Contractor Quality Control (CQC) Plan provides a framework for integrating quality into every aspect of construction of a durable cover for the remedial action at Parcel G, Hunters Point Naval Shipyard, San Francisco, California. ARCADIS U.S., Inc. (ARCADIS) has prepared this plan in accordance with Section 01 45 02, Quality Control (QC), of the contract specifications, as required, for Department of the Navy (Navy) review and acceptance prior to the start of construction. This CQC Plan is divided into the following sections:

- Section 1: Introduction
- Section 2: QC Organization
- Section 3: Appointment Letters
- Section 4: List of Definable Features of Work (DFOWs)
- Section 5: Three-Phase Control Procedures
- Section 6: Testing Plan and Log
- Section 7: Submittal Management Procedures
- Section 8: Procedures for Tracking Identification and Correction of Construction Deficiencies
- Section 9: Documentation and Reporting Procedures
- Section 10: Procedures for Completion Inspection
- Section 11: References

Tables and figures are provided following Section 11. The following supplemental information is appended to this document:

- Attachment A: Personnel Qualifications and QC Training Certificates

- Attachment B: Letters of Appointment
- Attachment C: Quality Control Forms
- Attachment D: Testing Plan and Log
- Attachment E: Testing Laboratory Accreditation
- Attachment F: Submittal Register

2. Quality Control Organization

The primary functions of the QC organization are to ensure that work is completed in accordance with the project plans and specifications, without deficiency, and to the satisfaction of the Navy. To that extent, the focus of the QC organization is to ensure that a CQC Manager and QC staff with the appropriate qualifications and training are available to perform their on-site specialty QC functions. Figure 1 provides a project organization chart showing the QC organizational structure.

The CQC Manager will implement a three-phase control system for each DFOW: preparatory, initial, and follow-up phases. The CQC Manager will also implement a fourth and final phase that includes punch-out, pre-final, and final acceptance inspections (i.e., completion inspection). Safety is equal in importance to quality and is emphasized for each phase of construction.

Sections 2.1 through 2.5 summarize the duties and responsibilities for each person assigned a quality management function for this project.

The individuals that will function in the primary QC roles for the project are listed below. Resumes for the CQC Manager and Alternate CQC Manager are included in Attachment A.

- Project Manager (PM) – Scott Morris, PE
- Field Superintendent (FS) – Jeffrey Worden
- CQC Manager – David Gomes

- Alternate CQC Manager – James McCann
- Site Health and Safety (H&S) Officer – Tim Hess, CSP
- Alternate Site H&S Officer – Jeffrey Worden
- Corporate Health and Safety Manager (HSM) – Tom Burgess

The QC personnel listed above and shown on Figure 1 provide the management structure and capabilities to implement this plan. If the prime contractor finds it necessary to make changes to the personnel indicated above, this plan will be updated to reflect the changes after obtaining the Navy Contracting Officer's (KO's) acceptance of the changes.

2.1 Project Manager

Scott Morris, PE, is the PM for this project. The PM is the main point of contact for the project and is responsible for contractual management and technical execution of the remedial action in accordance with the awarded contract plans and specifications.

The PM has the following specific responsibilities:

- Communicating and coordinating directly and actively with the Navy for the duration of the project.
- Completing project activities in accordance with the contract specifications and approved planning documents.
- Submitting any proposed changes to this CQC Plan, after its acceptance by Navy, to the KO for acceptance prior to incorporation into the plan.
- Ensuring that work is conducted in a safe and environmentally sound manner (this includes ensuring coordination between the prime contractor's Corporate HSM and the Site H&S Officer).

The PM has the authority to stop work on any part of the job if work does not comply with contract plans or specifications. Further, the PM is authorized to institute corrective actions, as necessary, and to implement these changes, with client approval, in accordance with the provisions of the contract. The FS reports to the PM and acts at

his or her direction. The PM also consults with the designated prime contractor Principal-in-Charge and other senior company leaders and experts, as needed, for technical and resource assistance.

2.2 Field Superintendent

TBD. The FS is the on-site point of contact for the project and will be responsible for supervising all field activities and subcontractors. The FS will directly supervise field staff and is responsible for ensuring that all personnel adhere to the requirements of this CQC Plan. The FS has the authority to stop work if it is does not comply with contract specifications or project plans and will coordinate closely with the CQC Manager and PM.

The FS has the following specific responsibilities:

- Supervising all field crews and subcontractors and assisting the PM in ensuring that the DFOWs are constructed in accordance with the plans and specifications and in a safe and environmentally sound manner.
- Communicating and coordinating with the client and the PM for the duration of the project.
- Immediately notifying the client and PM of problems with construction or safety and health procedures.
- Ensuring that site personnel follow the approved procedures presented in the site-specific project plans and this CQC Plan.

2.3 Contractor Quality Control Manager

The CQC Manager for this project will be David Gomes. Per the project specifications, the only duties and responsibilities of the CQC Manager are to manage and implement the QC program under this contract. As reflected on Figure 1, the CQC Manager will report to an officer of the prime contractor and will not be subordinate to the FS or the PM. The CQC Manager has authority to act on all QC matters of this project. As specified in the appointment letter (Section 3), the CQC Manager has the authority and responsibility to stop specific work activities related to or affected by noncompliant conditions until actions can be taken to correct the noncompliant condition or prevent it from affecting related or subsequent work. The CQC Manager can also designate

representatives who are authorized to stop work activities related to noncompliant conditions and to specify corrective measures. The CQC Manager will have 5 years of qualifying experience, which is required prior to assuming the role and responsibilities at the site. The CQC Manager will also have completed the Construction Quality Management for Contractors course. A copy of the completion certification is included in Attachment A.

The CQC Manager has the following specific responsibilities:

- Communicating with the assigned Resident Officer in Charge of Construction (ROICC), KO, and Project Engineer.
- Communicating with the prime contractor's FS, Site H&S Officer, and PM.
- Attending the Coordination and Mutual Understanding Meeting.
- Implementing and managing the QC program.
- Conducting weekly QC meetings with the FS.
- Identifying, scheduling, and inspecting the DFOWs, following the three phases of control.
- Inspecting and documenting construction activities in accordance with the contract QC requirements.
- Reviewing and coordinating submittals for conformance with the requirements of the work and contract documents.
- Transmitting submittals to the office of the approving authority.
- Ensuring required QC testing is performed.
- Ensuring required progress and completion photographs are performed.
- Providing QC certifications and documentation to meet contract requirements.

- Managing and coordinating the three phases of control and documentation performed by the testing laboratory personnel and any other inspection and testing personnel.

- Reviewing and approving the CQC plan and any proposed amendments to the plan.

- Overseeing quality of construction work performed by the prime contractor and its subcontractors.

The Alternate CQC Manager, will take over the functions of the CQC Manager if the CQC Manager cannot perform their function (e.g., due to illness, vacation, etc.). The Alternate CQC Manager has the same duties, authority, qualifications, and responsibilities as the CQC Manager. The CQC Manager or the Alternate CQC Manager shall be on site at all times during the progress of the work.

Should work occur at multiple parcels simultaneously, the CQC Manager has the authority to designate an Assistant CQC Manager to help ensure project QC requirements are met. Implementation and management of project QC will remain the CQC Manager's responsibility; however, the Assistant CQC Manager can assist the CQC Manager with the following tasks:

- Inspecting and documenting construction activities in accordance with the contract QC requirements.

- Verifying field measurements and materials.

- Overseeing QC testing.

- Providing QC certifications and documentation to meet contract requirements.

- Coordinating the three phases of control and collecting documentation performed by the testing laboratory personnel and any other inspection and testing personnel.

- Overseeing quality of construction work performed by the prime contractor and its subcontractors.

2.4 Site Safety and Health Officer

Tim Hess, CSP, will be the Site H&S Officer for this project. The Site H&S Officer is authorized by the Corporate HSM to implement and enforce all health and safety protocols related to a particular project. Mr. Hess meets the experience, training, and qualification requirements outlined in Section 01 35 29 of the Project Specifications.

The Site H&S Officer has the following specific responsibilities:

- Reviewing and implementing the Accident Prevention Plan (APP) and Site Safety and Health Plan (SSHP; ARCADIS 2012).
- Conducting safety meetings.
- Documenting compliance with health and safety policies and corrective measures.
- Stopping work for noncompliance with health and safety protocols.

The Alternate Site H&S Officer will be determined prior to the commencement of field activities and, will take over the functions of the Site H&S Officer if the Site H&S Officer cannot perform his or her function (e.g., due to illness, vacation, etc.). The Alternate Site H&S Officer will have the same duties, authority, qualifications, and responsibilities as the Site H&S Officer.

2.5 Corporate Health and Safety Manager

The Corporate HSM manages all aspects of the Corporate Health and Safety Program, and has the following responsibilities:

- Establishing of the Corporate Health and Safety Audit Program Manual (ARCADIS 2005).
- Implementing training programs.
- Ensuring employee compliance with health and safety training and procedures.
- Reviewing APPs and SSHPs.

- Appointing designees to review health and safety practices during projects.
- Appointing Site H&S Officers who are authorized to stop work, so that any health and safety deficiencies can be addressed immediately and corrected.

3. Appointment Letters

Authority to stop work and to implement and manage the three phases of control is granted to the CQC Manager per the Letter of Appointment enclosed in Attachment B. A similarly worded appointment letter will be issued to the Alternate CQC Manager and will be enclosed in Attachment B once the Alternate CQC Manager has been identified. If any QC specialists are necessary, once they have been selected, a Letter of Direction will be issued by the CQC Manager outlining their duties, authorities, and responsibilities.

4. List of Definable Features of Work

Table 1 lists the DFOWs for this project along with cross references to relevant contract and specification sections. The prime contractor will perform the three phases of QC (i.e., preparatory, initial, and follow-up) for each DFOW (see Section 5).

5. Three-Phase Control Procedures

The QC procedures for construction are based on the following three phases of QC and inspections:

- Preparatory Phase
- Initial Phase
- Follow-Up Phase

The CQC Manager will implement all three phases of control for each DFOW (see Table 1). Attachment C provides examples of the Preparatory Phase and Initial Phase Checklists.

The following subsections discuss each QC phase.

5.1 Preparatory Phase

The Preparatory Phase will be performed prior to beginning any work on each DFOW. The Preparatory Phase meeting will take place after all required plans, documents, and materials are approved and accepted and are available at the project site or have been confirmed for delivery at the time needed (e.g., concrete). The Preparatory Phase will include the following activities:

- Schedule: Schedule the Preparatory Phase meeting and inspection and notify the ROICC at least 2 days in advance of the Preparatory Phase meeting.
- Attendees: Record attendees present at the meeting.
- Specifications: Review each paragraph of applicable specifications, discuss procedures to accomplish work, and clarify any differences.
- Drawings: Review the contract drawings.
- Field Measurements: Verify that field measurements are as indicated on the construction and shop drawings before confirming product orders to minimize waste caused by excessive materials.
- Submittals: Verify that appropriate shop drawings and submittals for materials and equipment have been submitted and approved, when required. Verify that approved materials are on-hand (if not, document missing items and when they are expected to arrive). Verify approved submittals against delivered materials. Verify receipt of approved factory test results, when required.
- Testing: Review the testing plan and ensure that the provisions have been made to provide the required QC testing.
- Preliminary Work: Examine the work area to ensure that the required preliminary work has been completed.
- Materials: Coordinate the schedule of product delivery to designated prepared areas to minimize site storage time. Verify that materials are stored properly. If not, describe the action that was taken. Arrange for the return of shipping and packaging materials where economically feasible.

- Controls and Methods: Discuss specific controls used and construction methods, construction tolerances, workmanship standards, and the approach that will be used.

- Safety: Review the APP and relevant Activity Hazard Analysis (AHA; ARCADIS 2012), ensure that applicable safety requirements are met, and that the required Material Safety Data Sheets are submitted. Per the project specifications, the CQC Manager is not designated as the safety competent person.

- Meeting Comments: Document ROICC comments during the meeting.

- Other Items or Remarks: Document other items or remarks.

The ROICC will be notified at least 2 days prior to the start of the Preparatory Phase Inspection. The meeting will be conducted by the CQC Manager and attended by the FS, appropriate QC personnel, and the foreman who is responsible for that particular DFOW. Results of the Preparatory Phase meeting will be documented on the Preparatory Phase Checklist form (Attachment C) or by separate meeting minutes prepared by the CQC Manager and attached to the Daily Contractor Production and CQC Report. Completed checklists will be submitted the next business day to the ROICC.

Additional Preparatory Phases may be conducted on the same DFOW if the quality of ongoing work is unacceptable; if there are changes in the applicable QC personnel or in the on-site production supervision or work crew; if work on a DFOW is resumed after a substantial period of inactivity; or if other problems develop.

5.2 Initial Phase

The Initial Phase inspection is performed to establish the level of workmanship and compliance with contract requirements for workmanship, materials, and tests. An Initial Phase inspection will be performed near the beginning of each DFOW after a representative portion of the work has been completed and is available for inspection. The ROICC will be notified 2 days prior to conducting the Initial Phase meeting. This field inspection will include ensuring that preliminary workmanship complies with the contract documents and the following items:

- Notification: Document that notification was given to the ROICC.

- Personnel Present: Document personnel, position, and company and agency affiliation.
- Procedure Compliance: Identify full compliance with procedures identified at Preparatory Phase; coordinate plans, specifications, and submittals.
- Workmanship: Establish the quality of workmanship required.
- Resolution of Differences: Document differences and the resolution; note comments.
- Testing: Ensure that testing is performed by the approved laboratory.
- Safety: Check work procedures for compliance with the APP and the appropriate AHA (ARCADIS 2012) to ensure that applicable safety requirements are met.
- Other: Document any other conditions or comments.

The CQC Manager will conduct the Initial Phase with the FS, appropriate QC personnel, the foreman, and field personnel responsible for executing the work. The results of the Initial Phase will be documented on the Initial Phase Checklist form (Attachment C) or by separate meeting minutes prepared by the CQC Manager and attached to the Daily Contractor Production and CQC Report. Completed checklists will be submitted the next business day to the ROICC.

The Initial Phase will be repeated for each new crew to work on site or any time acceptable specified quality standards are not being met or are revised.

5.3 Follow-Up Phase

The Follow-Up Phase is performed daily to ensure continued compliance with the level of workmanship established in the Initial Phase. Daily checks will be performed to ensure continuing compliance with contract requirements, including efficiency of operations, testing of controls, and implementing corrective actions until completion of the DFOW. Inspections will be documented on the Daily CQC Report. Final follow-up checks will be conducted, and all deficiencies will be corrected prior to the start of any follow-up DFOW that may be affected by the deficient work.

6. Testing Plan and Log

The Testing Plan and Log consists of the various tests required for the project. Attachment D provides a copy of the initial Testing Plan and Log.

Sampling and tests required by this contract will be performed by a qualified independent testing laboratory. Independent laboratories used throughout this project will be accredited as required by 01 45 02, Quality Control, of the contract specifications. Attachment E provides the accreditation for the laboratory that will be testing construction materials.

The following sections discuss the approach to testing that will be conducted for this project.

6.1 Verification of Testing Procedures

Prior to each testing event, the CQC Manager will verify that control measures are adequate to ensure testing will deliver a product or system that conforms to contract requirements and specifications. The verification procedures will be incorporated into the Preparatory Phase of the QC control process and will include some or all of the following steps:

- Review all applicable specifications, contract drawings, references codes, and standards that are relevant to the upcoming testing events.
- Review testing requirements.
- Review the Testing Plan and Log.
- Review the tools, equipment, and instrument requirements to perform the subject tests.
- Verify the applicable tools, equipment, and instruments are on site, in good condition, and properly calibrated (if needed).
- Check test instrument calibration data against certified standards (if applicable).
- Verify that any off-site laboratories to be used have been preapproved by Navy (if applicable).

- Review the availability and qualifications for the persons who will conduct the test(s).
- Review the appropriate AHAs described in the APP (ARCADIS 2012) to ensure safety requirements for the specified test(s) are met.
- Verify that recording forms have been prepared and test identification control numbers have been assigned prior to testing.
- Review construction and testing schedules, and ensure the testing schedule will not interfere with the construction schedule.

6.2 Testing Results Documentation

Results of all testing will be recorded on or attached to the Daily CQC Report for the date performed or date results received. The report will cite applicable contract requirements, tests, or analytical procedures used, as well as reference the locations where tests were performed or samples collected and the sequential control number identifying the test. Test results will provide actual results and include a statement that the item tested or analyzed conforms or fails to conform to specified requirements. Each test result cover sheet will be conspicuously stamped in large red letters "CONFORMS" or "DOES NOT CONFORM," whichever is applicable based on the specification requirements. Certified test results shall be signed by an authorized testing laboratory representative.

Test reports will be submitted to the ROICC when they become available to the prime contractor, and the CQC Manager will notify the ROICC immediately if an item fails to conform. The Testing Plan and Log will be updated for any additional testing that may be required based on initial results. A summary log of field tests performed will be compiled monthly and attached to the last daily CQC Report of each month for submission to the ROICC.

7. Submittal Management Procedures

The prime contractor is responsible for scheduling, preparing, reviewing, certifying, and managing submittals required for this project. The prime contractor is also responsible for ensuring that certifications provided by others (e.g., vendors and subcontractors) are accurate and comply with the contract requirements.

This section describes the CQC requirements for submittal and related recordkeeping procedures. Examples of submittals and documents to which this section applies include (but are not limited to) shop drawings, product data, samples, operation and maintenance data, and administrative submittals. Contractual requirements on submittal procedures are detailed in Section 01 33 00 of the contract specifications.

7.1 Submittal and Records Management

The CQC Manager will be responsible for ensuring through detailed review that submittals, as well as the materials and the work they represent, comply fully with applicable contract specifications. The CQC Manager will also be responsible for ensuring that a project file is established and maintained at the jobsite, and that project documents are retained and controlled appropriately.

7.2 Reviewing and Certifying Submittals

A registered engineer qualified in the discipline relevant to the submittal will initially review project submittals. The FS or PM will also review them for technical content and conformance with project design concepts. Subsequently, the CQC Manager will review submittals to ensure they comply with contract requirements. Submittals covering component items that form a system or items that are interrelated will be scheduled and submitted concurrently to the greatest extent practicable. Subcontractors and suppliers will be informed of the submittal requirements for their scopes of work and will provide requisite submittals to the prime contractor for review and submittal to the Navy. The approved Submittal Register will serve as the scheduling document used to track and control submittals through the duration of the project. Submittals will be transmitted with a unique tracking number assigned from the Submittal Register, as necessary.

As part of the submittal and certifying procedure, each submittal will be stamped or otherwise marked with the CQC Manager's certifying statement or approving statement as shown below.

When the approving authority is the ROICC, the Contractor will certify submittals with the following certifying statement before forwarding to the ROICC:

"I hereby certify that the (equipment) (material) (article) shown and marked in this submittal that is proposed to be incorporated with Contract Number N62473-11-D-2226, Task Order Number X002, is in compliance with the contract drawings and

specification, can be installed in the allocated spaces, and is submitted for Government approval.

Certified by Submittal Reviewer _____, Date _____

(Signature when applicable)

Certified by CQC Manager _____, Date _____"

When the approving authority is the CQC Manager, the CQC Manager will use the following approval statement when returning submittals to the Contractor as "Approved" or "Approved as Noted."

"I hereby certify that the (material) (equipment) (article) shown and marked in this submittal and proposed to be incorporated with Contract Number N62473-11-D-2226, Task Order Number X002, is in compliance with the contract drawings and specification, can be installed in the allocated spaces, and is approved for use.

Certified by Submittal Reviewer _____, Date _____

(Signature when applicable)

Approved by CQC Manager _____, Date _____"

After the submittals are signed and certified as complete, the CQC Manager will be responsible for ensuring the Submittal Register is updated regularly (typically daily) at the project site with the latest approved and certified submittals.

7.3 Submittal Scheduling

The CQC Manager, working with the FS, PM, and vendors, will establish and maintain a project submittal schedule. Submittal activities are incorporated into the work schedule, so their effect on the construction schedule can be clearly assessed and managed. Submittal schedules must allow for preparation, evaluation, approval, procurement, and delivery of materials and equipment prior to the Preparatory Phase of each DFOW. The CQC Manager will be responsible for monitoring the progress of project submittals and apprising the PM.

The CQC Manager, with assistance from the FS, will update the submittal schedule and register on a routine basis. As stated in Section 7.5, the CQC Manager will be responsible for maintaining and entering regular updates to the Submittal Register. Submittals covering component items that form a system or items that are interrelated are to be scheduled and submitted concurrently. The CQC Manager and the FS will coordinate scheduling, sequencing, preparing, and processing of submittals with performance of work, so the submittal process will not delay work.

The time allowed for the approving authority to review submittals is 15 working days for CQC Manager approval and 20 working days for ROICC approval.

7.4 Review of Plans and Specifications

During the Preparatory Phase for a DFOW, the CQC Manager or designee (e.g., QC Specialist) will review plans and specifications and request clarification from the Designer of Record through the PM, where necessary. The primary purpose of this review is to identify and resolve potential conflicts prior to starting work. To minimize adverse effects on project schedules, QC checks will be performed as early in the process as practical to allow sufficient time for evaluation and response. The QC reviewer will be responsible for verifying that construction plans, shop drawings, and specifications:

- have been approved by the Navy for implementation on the particular DFOW;
- are clear and complete; and
- are executable, cost-effective, and practical.

QC checks will include items such as identifying discrepancies between plans and specifications, assessing and verifying site conditions and restraints, and verifying that proper allowances are made for maintenance space and access. As appropriate, any requests for information (RFIs) submitted to the Navy, or other less formal clarification requests, will be accompanied by the prime contractor's recommendations to resolve the issue.

7.5 Submittal Register

The prime contractor will maintain the Submittal Register in accordance with Section 01 33 00, Submittal Procedures, of the contract specifications. The current Submittal

Register will be submitted to the ROICC every 30 days or in other regular periods specified by the ROICC. The Submittal Register includes the following columns (see Attachment F):

- Column A identifies the activity number from the project schedule.
- Column B identifies the transmittal number, in consecutive format, assigned by the prime contractor. Resubmittals will require addition of a suffix to the original submittal number (e.g., the first resubmission of original submittal 16 will be labeled 16A, the second 16B, and so forth).
- Column C identifies the specification section in which the submittal is required.
- Column D describes the items required in each specification section (specific description number and type [e.g., "SD-02 Shop Drawings"]).
- Column E identifies the specification paragraph number where a material or product is specified.
- Column F identifies the approving agency.
- Columns G, H, and I identify the prime contractor's schedule dates for transmitting the submittal based on the indicated "approval needed by" and "material needed by" dates.
- Column J identifies the Contractor Action Code.
- Column K identifies the date of action used when forwarding submittals to QC.
- Column L identifies the date of submittal transmission.
- Columns M, N, O, and P identify the date related to the review actions and Approving Authority Action Code.
- Column Q identifies the date of submittal return by Navy to the prime contractor.
- Column R identifies remarks by Navy to the prime contractor.

7.6 Transmittal of Submittals

Submittals will be accompanied by a completed transmittal form (ENG Form 4025; Attachment C). This transmittal form can be used for submittals requiring Navy response and for information-only submittals. The transmittal form will be filled out with proper headings and the item(s) to be submitted properly identified. Proper listing of specification paragraph and sheet number of the contract drawings pertinent to the data submitted should also be included in the transmittal form.

7.7 Submittals of Vendors and Subcontractors

The CQC Manager will act as the focal point for review, certification, and management of submittals from vendors and subcontractors. The CQC Manager will stamp certify with contractor's approval all specified submittals prior to forwarding to the Navy. The CQC Manager will maintain a file of vendor and subcontractor submittals at the project site and will transfer the file to the prime contractor's project file following completion of the construction phase of the project. The FS or designee is responsible for identifying technical and schedule requirements for subcontractors and for overseeing subcontractor performance.

7.8 Location of Documents

The CQC Manager will maintain the following documents at the jobsite:

- An approved copy of this plan.
- A copy of the awarded plans and specifications and all contract modifications, arranged in numerical order.
- An up-to-date Submittal Register.
- A submittal file in which all submittal data and warranties are maintained.
- An active list of the DFOWs (see Table 1 of this plan).
- A file of all Preparatory Phase items for each DFOW.
- A file of all Initial Phase items for each DFOW.

- A file for the rework items list.
- A file of daily reports that include CQC Reports and Production Reports.
- A file of analytical reports that correspond to the Testing Plan and Log.
- An RFI log and file.
- A file of other QC activities, including milestone and completion inspections.

8. Procedures for Tracking Identification and Correction of Construction Deficiencies

Deficiencies, once identified, must be resolved or corrected prior to acceptance of the work or product. All project personnel are responsible for identifying deficiencies and nonconforming conditions and notifying their supervisor or manager as soon as the conditions are identified. Determination of any deficiencies and nonconforming conditions must be supported with objective evidence. Deficiencies and nonconforming conditions will be evaluated, resolved, or corrected and may be considered as opportunities to improve the process.

8.1 Documenting Deficiencies and Corrective Actions

Deficiencies and nonconforming conditions must be identified and documented. Individuals with knowledge of a deficiency will document the condition in a Deficiency Notice (see Attachment C). Completion and submittal of a Deficiency Notice represents a request for corrective action. The CQC Manager or QC staff will prepare the forms and provide them to the responsible Construction Manager (e.g., FS, subcontractor) for completion of their proposed corrective action. The CQC Manager will review the proposed corrective action and provide approval if acceptable or discuss further with the responsible party if not fully acceptable. Once the agreed-to corrective action has been completed, the CQC Manager or designated QC staff member will verify the completed action and provide the verified Deficiency Notice to the PM for review and acknowledgement. Any deficiencies or corrective actions that might necessitate a change to the contract requirements shall be brought to the attention of the PM prior to implementing the corrective action.

8.2 Tracking Deficiencies

Deficiencies will be numbered sequentially and tracked using a Rework Items List (see Attachment C). The Rework Items List will identify deficient items that require rework in numerical sequence, along with the related Deficiency Notice number, the date the item was originally discovered, a brief description of the item, contract specification or drawing references, actions taken by the CQC Manager or designee, and a brief description and date of completed corrective actions. The list will in essence track the status of Deficiency Notices.

The CQC will maintain and discuss the Rework Items List at each QC meeting. The CQC Manager and FS or subcontractor superintendent or foreman will agree on a reasonable time frame for correction. Deficiencies that have been identified since the last meeting will be discussed, and proposed correction dates will be scheduled.

The CQC Manager shall be responsible for listing items needing rework, including those identified by Navy personnel. A copy of the current Rework Items List will be forwarded to the ROICC with the Daily CQC Report.

8.3 Stop Work Authority

As expressly authorized in the letters of appointment (see Section 3), when specific work is identified that is not in compliance with contract requirements, the CQC Manager and authorized designees have the authority and responsibility to stop specific work activities related to or affected by noncompliant conditions until actions can be taken to correct the noncompliant condition or prevent it from affecting related or subsequent work. A stop work order goes into effect immediately. The decision to stop work pending corrective action should not be taken lightly.

A QC-initiated direction to stop work may be issued for a portion of a process or DFOW that would allow as much work as possible to continue, thus limiting the impact of the stoppage to areas directly affected by the condition. The CQC Manager will notify the FS and PM and document the stop work determination on the Daily CQC Report.

If the FS and PM do not agree with the stop work direction, the CQC Manager must contact the prime contractor's Principal-in-Charge for resolution.

9. Documentation and Reporting Procedures

Current records of on-site and off-site QC operations, activities, and tests performed, including the work of subcontractors and suppliers, will be maintained in a master file of QC documents at the project site. This master file may include but is not limited to the following:

- Site-specific project plans, including this CQC Plan
- Awarded contract plans and specifications, including any contract modifications
- Daily Contractor Production and CQC Reports
- Inspection reports (by DFOW)
- Test reports
- Shop drawings
- Submittal Register, transmittals, and submittals
- Redlined record drawings (i.e., as-built plans)
- Quality assurance audit reports
- Reports of noncompliance
- RFIs
- Change order correspondence
- Inspection logs

The following subsections present the specific required information and procedures regarding the integral QC documentation.

9.1 Daily Contractor Production Report

The FS will prepare and issue Daily Contractor Production Reports using the form provided in Attachment C. This report will be provided to the ROICC by 10:00 a.m. of the following workday and will include the following information:

- Date of report, report number, name of contractor, contract number, contract title and location, and FS present.
- Weather conditions in the morning and in the afternoon, including maximum and minimum temperatures.
- Description of work performed by corresponding Schedule Activity Number, Modification Number, etc.
- List of contractor and subcontractor personnel on the worksite, their trades, employer, work location, description of work performed, hours worked by trade, daily total work hours on work site this date (include hours on continuation sheets), and total work hours from start of construction.
- A list of job safety actions taken and safety inspections conducted. Indicate that safety requirements have been met, including the results on the following:
  - Was a job safety meeting held this date? (If YES, attach a copy of the meeting minutes.)
  - Were there any lost-time accidents this date? (If YES, attach a copy of the completed Occupational Safety and Health Administration report.)
  - Did site operations involve a crane, man-lift, trenching, scaffold, high voltage electrical, high work, or hazardous materials? (If YES, attach a statement or checklist showing inspection performed.)
  - Was hazardous material and waste released into the environment? (If YES, attach a description of incident and proposed action.)
- Identify Schedule Activity Number related to safety action, and list safety actions taken today and safety inspections conducted.

- Identify Schedule Activity Number and Submittal Number, and list equipment and material received each day that is incorporated into the job.

- Identify Schedule Activity Number and owner, and list construction and plant equipment on the worksite, including the number of hours used.

- Include a "remarks" section in this report that will contain pertinent information, including directions received, problems encountered during construction, work progress and delays, conflicts or errors in the drawings or specifications, field changes, safety hazards encountered, instructions given and corrective actions taken, delays encountered and a record of visitors to the worksite. For each remark given, identify the Schedule Activity Number that is associated with the remark.

Additional space required to contain daily information on the Daily Production Report will be placed on the Continuation Sheet(s). An unlimited number of Continuation Sheets may be added as necessary and attached to the Production Report.

9.2 Daily Contractor Quality Control Report

The CQC Manager will prepare and issue Daily CQC Reports using the form shown in Attachment C. The Daily CQC Report will be provided, along with the Daily Contractor Production Report, to the ROICC by 10:00 a.m. of the following workday. Reports are required for each day that work is performed, for every 7 consecutive calendar days of no work, and on the last day of a no-work period, accounting for each calendar day throughout the life of the project. The reporting of work will be identified by terminology consistent with the construction schedule. The CQC Manager will prepare, sign, and date the Daily CQC Reports, which will contain the following information:

1. Date of report, report number, contract number, and contract title.

2. Indicate if Preparatory Phase work was performed today (Yes/No checkboxes).

3. If Preparatory Phase work was performed today (including on-site and off-site work), identify its Schedule Activity Number and DFOW. The Index Number is a cross reference to the Preparatory Phase Checklist. An example of the Index Number is 0025-P01, where "0025" is the Daily CQC Report Number, "P" indicates Preparatory Phase, and "01" is the Preparatory Phase Checklist number(s) for this date. Each entry in this section must be accompanied by a corresponding Preparatory Phase Checklist Index Number.

4. Indicate if Initial Phase work was performed today (Yes/No checkboxes).

5. If Initial Phase work was performed today (including on-site and off-site work), identify its Schedule Activity Number and DFOW. The Index Number is a cross reference to the Initial Phase Checklist. An example of the Index Number is 0025-I01, where "0025" is the Daily CQC Report Number, "I" indicates Initial Phase, and "01" is the Initial Phase Checklist number(s) for this date. Each entry in this section must be accompanied by a corresponding Initial Phase Checklist Index Number.

6. Results of the Follow-Up Phase inspections held today (including on-site and off-site work), including Schedule Activity Number, the location of the DFOW, Specification Sections, etc. Indicate in the report for this DFOW that the work complies with the contract as approved in the Initial Phase, work complies with safety requirements, and that required testing has been performed; include a list of who performed the tests.

7. List the rework items identified, but not corrected by close of business, along with its associated Schedule Activity Number.

8. List the rework items corrected from the rework item list along with the corrective action taken and its associated Schedule Activity Number.

9. Include a "remarks" section in this report that will contain pertinent information, including directions received, QC problem areas, deviations from the CQC Plan, construction deficiencies encountered, QC meetings held, acknowledgement that as-built drawings have been updated, corrective direction given by the QC Organization, and corrective action taken by the Contractor. For each remark given, identify the Schedule Activity Number that is associated with the remark.

10. Daily CQC Report certification:

    "On behalf of the Contractor, I certify that this report is complete and correct and equipment and material used and work performed during this reporting period is in compliance with the contract Drawings and specifications to the best of my knowledge, except as noted in this report.

    Certified by CQC Manager _____, Date _____"

Additional space required to contain daily information on the Daily CQC Report will be placed on its Continuation Sheet(s). An unlimited number of Continuation Sheets may be added as necessary and attached to the Daily CQC Report.

9.3 Quality Control Specialist Reports

QC specialists that perform work on site will prepare and issue the QC Specialist Report. The QC Specialist Report will be provided as an attachment to the Daily CQC Report to the ROICC by 10:00 a.m. of the following workday.

9.4 Weekly Quality Control Meeting Minutes

During construction, the CQC Manager and FS will hold weekly QC meetings on site. The CQC Manager will notify the ROICC within 48 hours of the meeting; however, the ROICC is not required to attend. Meeting minutes will be provided to the ROICC within 2 calendar days. The following information will be discussed at the weekly QC meeting:

- A review of minutes from the previous meeting.
- The schedule and the status of work completed since the previous meeting, including work accomplished, rework identified, and rework items completed.
- A status update of completed, pending, and upcoming submittals.
- The work and associated documentation to be accomplished in the following 2 weeks, including:
  - completion dates for rework items;
  - planned and actual dates of the preparatory, initial, and follow-up phases;
  - estimated dates for testing and other inspections; and
  - construction approach and methodology for each upcoming DFOW.
- Resolutions for QC and production problems.
- A list of items that may require revising the QC plan, such as changes in QC organization personnel or changes in procedures.

9.5 Preparatory Phase Checklist

For each DFOW Preparatory Phase meeting, a Preparatory Phase Checklist (see Attachment C) will be completed. The completed checklist will accompany the submission of the Daily CQC Report of the same date. The following information will be on the Preparatory Phase Checklist:

1. Specification section, date of report, and contract number will be filled out. Duplicate this information in the header of the second page of the report.

2. DFOW, Schedule Activity Number, and Index Number entry and format will match the corresponding entry in the Preparatory Phase section of the Daily CQC Report.

3. Personnel Present: Indicate the number of hours of advance notice that was given to the Government Representative and indicate whether the Government Representative was notified (Yes/No checkboxes). Indicate the names of Preparatory Phase meeting attendees, their position, and their associated company and government agency.

4. Submittals: Indicate if submittals have been approved (Yes/No checkboxes); if no, indicate what has not been submitted. Are materials on hand (Yes/No checkboxes); if not, what items are missing. Check delivered material and equipment against approved submittals and comment as required.

5. Material Storage: Indicate if materials and equipment are stored properly (Yes/No checkboxes); if not, what action is or was taken.

6. Specifications: Review and comment on Specification Paragraphs that describe the material and equipment and procedure for accomplishing the work and clarify any differences.

7. Preliminary Work and Permits: Ensure preliminary work is in accordance with the contract documents and necessary permits are on file; if not, describe the action taken.

8. Testing: Identify who performs tests, the frequency, and where tests are to occur. Review the testing plan, report abnormalities, and indicate whether the test facilities have been approved.

9. Safety: Indicate if the AHA has been approved (Yes/No checkboxes) and comment on the review of the applicable portions of the U.S. Army Corps of Engineers' Consolidated Engineer Manual 385-1-1 (U.S. Army Corps of Engineers 2008).

10. Meeting Comments: Note comments and remarks during the Preparatory Phase Meeting that were not addressed in previous sections of this checklist.

11. Other Items or Remarks: Note any other remarks or items resulting from the Preparatory Phase Inspection.

12. The CQC Manager will sign and date the checklist.

For some tasks, task-specific checklists will be completed and attached to the Preparatory Phase Checklist.

9.6 Initial Phase Checklist

For each DFOW Initial Phase Inspection, an Initial Phase Checklist (see Attachment C) will be completed. The checklist will accompany the Daily CQC Report of the same date. The Initial Phase Checklist will have the following information:

1. Specification section, date of report, and contract number will be entered.

2. DFOW, Schedule Activity Number, and Index Number entry and format will match the corresponding entry in the Initial Phase section of the Daily CQC Report.

3. Personnel Present: Indicate the number of hours of advance notice that was given to the Government Representative and indicate whether or not the Government Representative was notified (Yes/No checkboxes). Indicate the names of Initial Phase Meeting attendees, their position, and name of company or government agency.

4. Procedure Compliance: Comment on compliance with procedures identified during the Preparatory Phase Inspection and assurance that work is in accordance with plans, specifications, and submittals.

5. Preliminary Work: Ensure preliminary work is in compliance; if not, what action is or was taken.

6. Workmanship: Identify where initial work is located; if a sample panel is required (Yes/No checkboxes); is the initial work the sample (Yes/No checkboxes); and if Yes, describe the panel location and precautions taken to preserve the sample.

7. Resolution: Comment on any differences and the resolutions reached.

8. Check Safety: Comment on the safety review of the job conditions.

9. Other: Note any other remarks or items resulting from the Initial Phase Inspection.

10. The CQC Manager will sign and date the checklist.

For some tasks, task-specific checklists will be completed and attached to the Initial Phase Checklist.

9.7 Field Test Reports

All QC testing for the project will be performed by an independent testing laboratory. The CQC Manager will consolidate test reports provided by the independent testing laboratory to prepare and issue Field Test Reports as testing occurs. The Field Test Report will be provided as an attachment to the Daily CQC Report to the ROICC within 2 working days after the test is performed.

9.8 Testing Plan and Log

As tests are performed, the CQC Manager will record information onto the Testing Plan and Log (see Section 6), including the date the test was conducted, the date the test results were forwarded to the ROICC, remarks, and acknowledgement that an accredited or Navy-approved testing laboratory was used, as applicable. A copy of the updated Testing Plan and Log will be attached to the last Daily CQC Report of each month. Attachment D includes the proposed Testing Plan and Log for the project.

9.9 Rework Items List

As described in Section 8.2, the CQC Manager will maintain a list of work that does not comply with the contract, identifying what items need to be reworked, the date the item was originally discovered, the date the item will be corrected, and the date the item was corrected. There is no requirement to report a rework item that is corrected the same day it is discovered. A copy of the Rework Items List will be attached to the last

Daily CQC Report of each month. The prime contractor will be responsible for including on the Rework Items List any items needing rework, including those identified by the ROICC. Attachment C includes an example of the Rework Items List.

9.10 As-Built Drawing

As-Built Drawings will be kept on site and kept current by marking deviations and revisions that have been made from the Contract Drawings. The CQC Manager will review As-Built Drawings on a daily basis and will initial each deviation and each revision. Each deviation and revision will be marked with the appropriate modifying documentation control number, such as the modification number or RFI number. Upon completion of work, the CQC Manager shall furnish a certificate attesting to the accuracy of the As-Built Drawings prior to submission to the ROICC.

9.11 Quality Control Binders On Site

At the project site, the prime contractor will establish and maintain a series of 3-ring binders that are divided as shown below. These binders will be readily available to the ROICC during all business hours.

1. Preparatory and Initial Phase Checklists arranged chronologically

2. Inspections, arranged chronologically

3. A current copy of the Testing Plan and Log, with supporting field test reports arranged chronologically

4. A current copy of the Rework Items List

5. Current copies of all punch lists issued by the prime contractor's QC Staff and all punch lists issued by the ROICC

10. Procedures for Completion Inspections

Completion Inspections will include the prime contractor's Punch-Out Inspection and the ROICC's Pre-Final Inspection and Final Acceptance Inspection. The inspections and corrective actions will be completed within the schedule stated for completion of the entire work, or any particular increment thereof if the project is divided into

increments by separate completion dates. Punch-Out, Pre-Final, and Final Inspection Checklists are included in Attachment C.

10.1 Punch-Out Inspection

The prime contractor's CQC Manager will perform a Punch-Out Inspection near the completion of work or an increment of the work. The CQC Manager will conduct an inspection of the work and will develop the punch list of items that do not conform to the approved drawings and plans and specifications or submittals. The punch list will include any items remaining on the rework items list that have not been corrected. A copy of the punch list will be provided to the ROICC. The CQC Manager will make follow-up inspections to ascertain that all deficiencies have been corrected. When this is completed, the CQC Manager will notify the ROICC that the system is ready for their inspection.

10.2 Pre-Final Inspection

The prime contractor will notify the ROICC 5 days prior to scheduling the Pre-Final Inspection. The ROICC will perform the Pre-Final Inspection to verify that the remedial action has been implemented satisfactorily. A Pre-Final Punch List may be developed as a result of this inspection. The prime contractor's CQC Manager will ensure that all items on the list are corrected in a timely manner and prior to notification to the Navy that a final inspection can be scheduled with the prime contractor.

10.3 Final Acceptance Inspection

The ROICC will schedule the Final Acceptance Inspection based on the results of the Pre-Final Inspection. The prime contractor will provide at least a 14-day notice to the ROICC that the Pre-Final Punch List items and any other rework items have been completed, along with all remaining work performed under the contract.

10.4 Inspection Documentation

Inspection documentation will be attached to the Daily CQC Reports; the information generated by inspections will be used to document and track deficiencies and corrective actions, where necessary. Punch-Out, Pre-Final, and Final Inspection Checklists are included in Attachment C. The CQC Manager will review the completed documents. Documents will be maintained on site and will be available for inspection.

11. References

ARCADIS U.S., Inc. (ARCADIS). 2005. Corporate Health and Safety Audit Program Manual. July.

ARCADIS. 2011. Program Construction Quality Management Plan. October.

ARCADIS. 2012. Draft Accident Prevention Plan for Remedial Action in Parcel G, Hunters Point Naval Shipyard, San Francisco, California. September.

U.S. Army Corps of Engineers. 2008. Consolidated EM 385-1-1, Safety and Health Requirements. September 15 (Changes 1 through 6, Last Revised August 2011). Also Available Online at: <http://www.usace.army.mil/CESO/Pages/EM385-1-1.aspx>.

ARCADIS

TABLES

Table 1
Definable Features of Work for Project Activities

DFOW No.	DFOW Title	Field Activities Included	Specification Sections	Location in RAWP
1	Mobilization	▪ Temporary Facilities and Controls ▪ Temporary Environmental Controls ▪ Preconstruction Survey	01 50 00 Temporary Facilities and Controls 01 57 19 Temporary Environmental Controls	Section 2.2.1
2	Site Clearing and Demolition	▪ Clearing of Vegetation and Surface Debris	02 41 00 Site Clearing	Section 2.2.2
3	Grading	▪ Import Aggregate Base ▪ Final Grading	31 00 00 Earthwork	Section 2.2.2
4	Durable Cover Restoration and Replacement	▪ Sealing of Cracks and Patching Potholes in Pavement ▪ Placement of Aggregate Base ▪ Placement of Asphalt Concrete ▪ Placement of Asphaltic Seal Coat	03 30 00 Concrete 32 01 17 Sealing of Cracks and Potholes in Bituminous Pavements 32 10 00 Bituminous Concrete Pavement	Section 2.2.3
5	Site Cleanup and Demobilization	▪ Installation of Site Security Fencing and Signs ▪ Site Cleanup ▪ Final As-Built Survey ▪ Demobilization	31 00 00 Earthwork 01 57 19 Temporary Environmental Controls 10 14 01 Signs	Section 2.2.5 Section 2.3.2

Notes:
DFOW = definable feature of work
RAWP = Remedial Action Work Plan

ARCADIS

FIGURES

Figure 1 Project Organization Chart

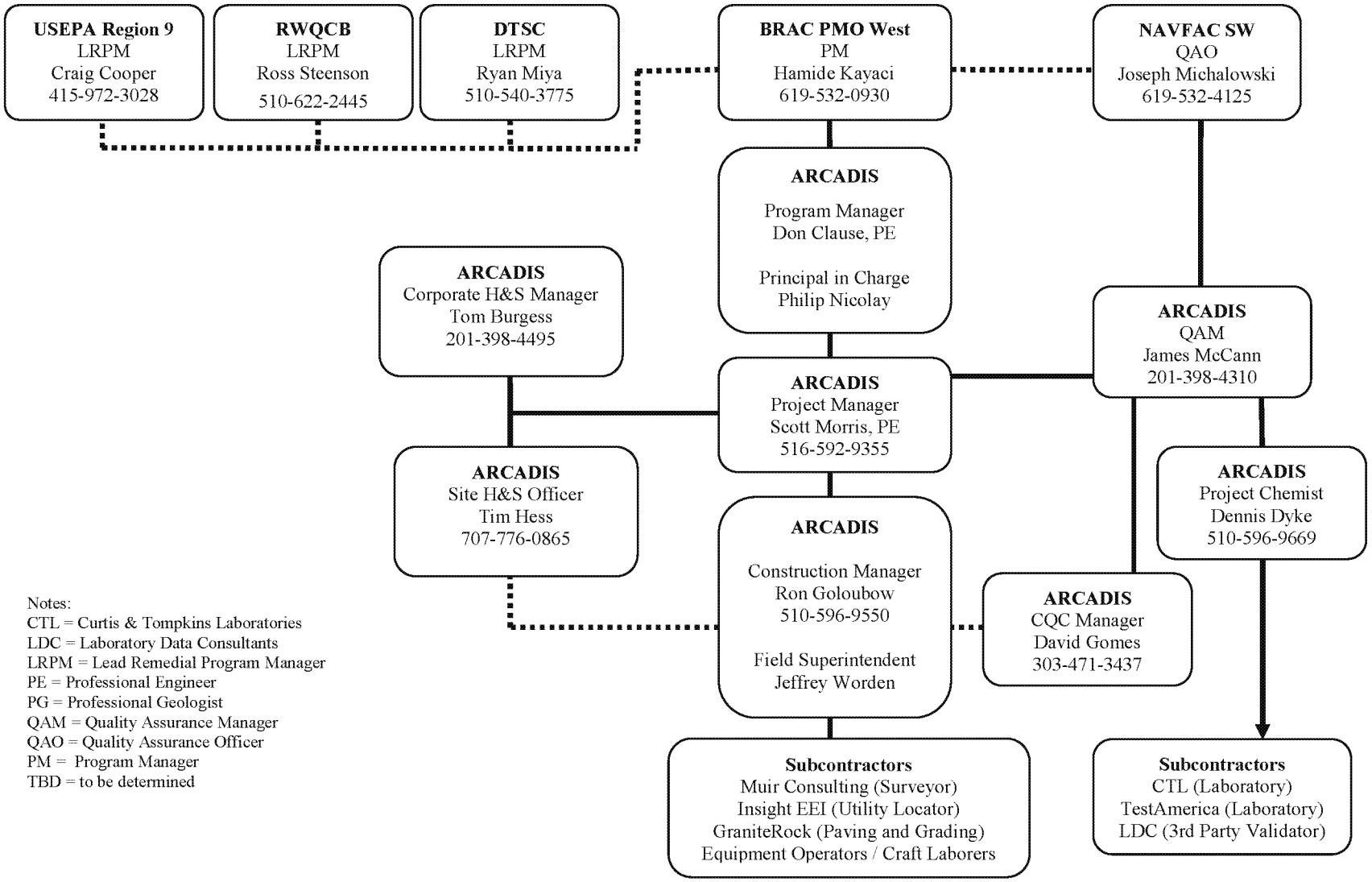

Notes:
CTL = Curtis & Tompkins Laboratories
LDC = Laboratory Data Consultants
LRPM = Lead Remedial Program Manager
PE = Professional Engineer
PG = Professional Geologist
QAM = Quality Assurance Manager
QAO = Quality Assurance Officer
PM = Program Manager
TBD = to be determined

Appendix A Personnel Qualifications and QC Training Certificates

U.S. ARMY CORPS OF ENGINEERS

USACE LEARNING CENTER
HUNTSVILLE, ALABAMA

NAVFAC

CERTIFICATE

David Gomes

Certificate #NWP031100058

has completed the Corps of Engineers and Naval Facility Engineering Command Training Course

CONSTRUCTION QUALITY MANAGEMENT FOR CONTRACTORS - #784

AGC Wilsonville, OR	10/14/2011	CENWP	Michael Moran, L.E.G.
Location	Training Date(s)	Instructional District/NAVFAC	CQM-C Manager
Ed Saldana	Eddie.Saldana@usace.army.mil	503.492.3570	
Facilitator/Instructor	Email	Telephone	Facilitator/Instructor Signature

THIS CERTIFICATE EXPIRES FIVE YEARS FROM DATE OF ISSUE

Director, USACE Learning Center

Job Title: CQCS: Remediation/Construction	Employed by: ☑ Prime ☐ Team Member
Name: David Gomes, PE, PMP	Total Years Environmental Experience: 14
Education and Training: BS/Mechanical Engineering/1993 USACE Construction Quality Management for Contractors	Experience Government Projects: **Federal: 5 Projects** 2003-Present/AEC 2002-Present/USACE
Professional Registration/Certification(s): Professional Engineer: CA, CO, NM Project Management Professional (PMP)	

Required Qualification per Section L:	Support for Exceeding Qualification:
3 years experience in QC of chem/haz waste remediation	10 years
Expertise in on-site laboratory experience	8 years
QA/QC for remedial investigations, design and actions	10 years
Employee of the Prime	With ARCADIS since 1999

Brief Summary of Experience as it Relates to Proposed Position:

As a senior engineer, Mr. Gomes is responsible for planning, implementing, and managing a variety of environmental projects. His experience with ARCADIS has included quality control assessments, soil and groundwater investigations, and remediation system implementation and design, including the design, installation, and quality control assessments of traditional and innovative remediation systems (soil-vapor extraction, air sparge, in-situ biological reactive zone). His experience prior to ARCADIS included quality control assessments of electronic components to military standards.

Work on Projects Presented in Previous Experience:

✓ Project #: Sierra AD ✓ Project #: Reese AFB ✓ Project #: Lake City AAP

Specialized Qualifications and Experience Record from Last 5 Years:

PBC Environmental Restoration Services for the Former Reese Air Force Base, TX *(Project #)*

Start Date: 4/2004	*Completion Date:* 9/2014	*Cost:* $43.5M	*FFP, or CR:* FFP

Assistant project manager and CQCS since 2007 for this PBC. The scope of activities includes regulatory closure for seven soil SWMUs and three groundwater SWMUs. The contaminants of concern (COCs) include metals in soil, and chlorinated hydrocarbons for the groundwater plumes. The remediation of the largest groundwater plume (13,000 feet long) included the treatment and operation of a pump and treat system in conjunction with IRZ treatments for plume hot spots. The IRZ for this plume was designed to achieve partial dechlorination of the primary VOC (TCE), which will result in cis-1,2-DCE remaining in the groundwater at levels below the federal maximum concentration levels. By not completing the full dechlorination process, further by-products of cis-1,2-DCE will not be generated. Negotiated complex conversion of Texas Risk Reduction Standards to the TRRP to expedite administrative closure of the facility.

Performance-Based Environmental Restoration Services for Lake City Army Ammunition Plant, MO *(Project #)*

Start Date: 9/2003	*Completion Date:* 9/2012	*Cost:* $20M	*FFP or CR:* FFP

CQCS and lead design engineer for the design and implementation of an IRZ treatment system to treat a TCE plume resulting from past operations in Area 12 of the facility. Successfully designed, implemented, and achieved regulatory concurrence of successful operation of the treatment system by the schedule deadline. Provided quality reviews of construction documents.

PBC Environmental Restoration Services for Sierra Army Depot, CA *(Project #)*

Start Date: 9/2003	*Completion Date:* 9/ 2013	*Cost:* $52.3M	*FFP or CR:* FFP

Quality reviewer for remediation system construction documents. Also served as cost estimator and task manager for large TCE plume remediation project. Contributed to design of IRZ system to treat VOCs in-situ.

PBC Environmental Investigation and Remediation at White Sands Missile Range, NM

Start Date: April 2008	*Completion Date:* 12/2015	*Cost:* $21.1M	*FFP or CR:* FFP

CQCS for regulatory closure of soil and groundwater SWMUs. The contaminants include metals for soils, chlorinated hydrocarbons and chromium in the groundwater plumes. Managed the development of a sophisticated CSM to understand the complex hydrostratigraphy beneath the SWMUs. Developed a construction QC work plan for landfill cap, excavation, and treatment system construction projects.

In-Situ Reactive Zone Pilot Study, Fort Ord, CA

Start Date: 1/2005	*Completion Date:* 12/2007	*Cost:* $2M	*FFP or CR:* CR

CQCS and lead technical design engineer for the design and implementation of an IRZ pilot study managed through the USACE San Francisco District. A TCE plume resulting from fire fighting training at the former military installation existed in OU1. Conducted a successful pilot study, demonstrating that reducing conditions could be achieved in high-conductivity, homogenous sand aquifer.

Use or disclosure of data contained on this sheet is subject to the restriction on the title page of this proposal.

U.S. ARMY CORPS OF ENGINEERS

PROFESSIONAL DEVELOPMENT SUPPORT CENTER
HUNTSVILLE, ALABAMA

CERTIFICATE

This is to certify that

James McCann

has completed the Corps of Engineers Training Course

CONSTRUCTION QUALITY MANAGEMENT FOR CONTRACTORS

Given at NEW YORK CITY (Location) By NEW YORK (Instructional District) 30 Nov.-1 Dec. 2011 (Date)

Peter De Stefano (732) 846-5830
Facilitator

THIS CERTIFICATE EXPIRES FIVE YEARS FROM DATE OF ISSUE

Chief, USACE Professional Development Support Center

James M. McCann

Proposed Position: Quality Control Manager

Current Job Title	Project Senior Chemist
Employment Status:	Fulltime Employee of Prime Contractor
Dates and Company Name for Experience with Other Firms:	
2004 – Present	Malcolm Pirnie Inc. (a wholly-owned subsidiary of ARCADIS U.S., Inc.)
1999 – 2003	Entergy Nuclear Northeast/Con Edison - Indian Point Energy Center
1998 – 1999	Independent Consultant in Analytical Chemistry
1964 – 1998	Texaco Research Center
Education:	BS/1964/Chemistry; MA/1974/Chemistry
Active Registration(s):	Not Applicable

Experience:
- ✔ Developing, maintaining, and enforcing QC programs
- ✔ Environmental quality control procedures
- ✔ Environmental regulatory requirements
- ✔ Remedial actions

Requirements:
- ✔ More than 4 years of experience as part of a project team performing implementation/oversight of quality controls
- ✔ More than 4 years of experience in a laboratory as a supervisor, manager and quality control officer

Relevant Project Experience and Qualifications:

Mr. McCann is a project senior chemist with a strong background in analytical chemistry, environmental analyses, method development, laboratory quality assurance/quality control (QA/QC), as well as project planning following the systematic planning process. He is also a key technical resource for developing project data quality objectives (DQOs) and then selecting analytical methods and sampling procedures that support the DQOs. Jim is an experienced analytical chemist who served for many years as an R&D Analytical Chemistry Group Leader supervising large teams of chemists perfroming both organic and inorganic analyses. He also served as the Chairman on the ASTM D-2 Subcommittee 4 on Hydrocarbon Analysis, which is one of the largest subcommittees in ASTM. As such, he is recognized for his expertise in hydrocarbon analysis, petroleum product testing, chromatography methods and analytical test method development. While serving as the chemistry Technical Director and QA Officer at the Indian Point Energy Center, he prepared the laboratory's Qaulity Qssurance manual and supervised the laboratory's QC program. Under his direction, the laboratory obtained National Environmental Laboratory Accreditation Program (NELAP) certification through the New York State Department of Environmental Conservation (NYSDEC) and implemented an improved laboratory QC program. He also has extensive experience in project planning requirements and the preparation of quality assurance project plans (QAPPs) for Federal project. Since joining Malcolm Pirnie, he has served as the Quality Assurance Officer for various large Federal Superfund projects and remedial investigations. In January 2006, he attended U.S. Environmental Protection Agency (EPA) sponsored training on the preparation of QAPPs using the Uniform Federal Policy (UFP). Since that time, Jim has prepared numerous UFP-QAPPs, and has provided guidance to other staff responsible for preparing UFP-QAPPs. He is knowledgable in the requirements of the Department of Defense Qulaity Systesm Manual for Environmental Laboratories and provides chemistry and QA/QC support to a variosu US Army Corps of Engineers (USACE) remedial investigations involving muntions and explosives. He also currently serves as the Malcolm Pirnie QA Officer for the Navy Southwest (SW) munitions and explosives sampling and analysis projects and is familiar NAVFAC-SW requirements for UFP-Sample and Analyses Plans (UFP-SAPs). Mr. McCann is well organized and has strong technical and communication skills.

Examples of his project experience include:

Navy Facilities Engineering Command Southwest (NAVFAC-SW): Naval Base Site Inspections: Quality Assurance Officer. Serves as the Malcolm Pirnie QA Officer for the NAVFAC-SW Site Inspection Projects involving the sampling and analysis for munitions and explosives. Provides project team members with QA review of planning documents to insure that they comply with the Navy QA requirements. Interfaces with the NAVFAC-SW QA Officer regarding the review of project documents and the resolution of quality assurance issues,

USACE Baltimore District, Munitions/Explosives Project Support: Currently provides chemistry and QA/QC support to various USACE munitions and explosives projects. This support includes assisting project team members with planning document preparation using UFP-QAPP requirements, as well as evaluating and selecting appropriate sampling and analytical methodologies for samples containing explosives.

USACE Baltimore District, Range Inventory, Baltimore, MD: Assisted the project team by working with laboratory and Corps to resolve problems with analytical methodology being used by the lab for explosives analyses.

USACE and the U.S. Army Center for Health Promotion and Preventive Medicine (CHPPM): Fort Jackson/McCarty Training Center – Operational Range Assessment Program (ORAP) Phase II/ South Carolina. As project chemist provided guidance on chemistry and quality issues during the project planning and development of the UFP-QAPP. Coordinated selections of the analytical methods and laboratories. Investigated and resolved QA/QC issues with the analytical methods employed for explosives analyses.

Use or disclosure of data contained on this sheet is subject to the restriction on the cover page of this document

James M. McCann — Proposed Position: Quality Control Manager

USACE Kansas City District, Lower Passaic River Remedial Investigation/Feasibility Study (RI/FS), Newark, NJ: Serves as site QA officer and lead chemist responsible for data validation and all analytical data management associated with environmental sampling and ecosystem restoration program conducted for USACE.

- Developed project specific QAPPs and (including UFP-QAPPs for the Passaic River Empirical Mass Balance Project and Passaic River Oversight Split Sampling).
- Responsible for the selection of the laboratory analytical procedures and QA/QC requirements for the sediment and water column sampling programs, while maintaining close interface with USEPA chemists.
- Investigated and resolved laboratory quality issues associated with the laboratory analytical programs.

USACE Kansas City District, Hudson Design Support, Fort Edward, NY: Coordinated efforts with the laboratory and USEPA chemists/staff to troubleshoot and optimize the analytical methodology used for polychlorinated biphenyl (PCB) congener analyses for environmental samples used in the Hudson Baseline Monitoring program.

- Supported the project's QA coordinator and the client by providing technical input and review regarding chemistry/QA issues.
- Prepared

USACE Kansas City District, Newark Bay Oversight, Newark, NJ: As site QA officer, drafted the QAPP for the Newark Bay Study Area Oversight Programs following the UFP-QAPP format.

- Provided technical support to client by reviewing numerous planning and technical documents and participating in technical discussions regarding analytical methods and reporting limits.

USACE Kansas City District, Cornell-Dubilier Electronics Superfund Site, South Plainfield, NJ: Lead project chemist on a comprehensive assessment and remediation programs at the former Cornell-Dubilier Electronics facility. This site is contaminated with PCBs, along with other chemicals.

- Prepared multiple UFP-QAPPs for projects associated with the site including the operable unit (OU-2) Soil Remedial Design Investigation Program, OU-2 Capacitor Disposal Area Soils Split Sample Analyses, OU-1 Property Soil and Indoor-Dust Sampling and the OU-3 Groundwater Sampling and Analyses Program. Also developed the OU-2 Building Material Investigation QAPP.
- As project quality officer for the Cornell-Dubilier investigations has been responsible for the quality assessments of field sampling activities and analytical data.

USACE Kansas City District, Dover Municipal Well No. 4 Superfund Site, Dover, NJ: Chemist for groundwater design investigation at a former dry cleaning facility. Prepared the UFP- QAPP for soil and groundwater sampling and analysis program. Responsible for assessments of field sampling activities and the quality of laboratory data.

Entergy Nuclear Northeast/Con Edison, Indian Point Energy Center, Chemistry Project Specialist, Buchanan, NY: Enhanced the laboratory's quality assurance program as environmental laboratory program technical director and QA officer.

Texaco Research Center: Consultant/Senior Group Leader/Team Leader/Chemist, Analytical Chemistry Projects / Beacon NY.
Supervised analytical chemistry groups and led the development of a wide variety of new analytical methods in support of diverse petroleum research and development programs such as fundamental research, alternate energy research, refining research, catalyst research, automotive lubricants and fuels research, chemical research, and additive development.

- Established the Environmental Gas Chromatography analysis laboratory (water).
- Provided analytical chemistry support to petroleum spill identification and environmental investigations.
- Directed the Annual General Test Survey of the Corporation's global laboratories which evaluated the quality of laboratory data.

Signature:	Date:
James M. McCann	10 November 2009

Use or disclosure of data contained on this sheet is subject to the restriction on the cover page of this document

U.S. ARMY CORPS OF ENGINEERS

PROFESSIONAL DEVELOPMENT SUPPORT CENTER
HUNTSVILLE, ALABAMA

CERTIFICATE

SCOTT MORRIS

has completed the Corps of Engineers Training Course

CONSTRUCTION QUALITY MANAGEMENT FOR CONTRACTORS

(STATE OF FLORIDA, Construction Industry Licensing Board COURSE # 004F0384-1B)
(12 CEHs of 16 CEH requirement, 1 CEH for Business Practices (site safety, workman's comp., financing CEHs not included)
(STATE OF FLORIDA, Board of Architecture and Interior Design COURSE # AR.04.579 - 17 Hours - Level of Instruction - Advanced)

is awarded continuing education credits as
*indicated for **16** hours of organized instruction*

Certified Provider #199309
1.3 CEUs

Registered Provider #I009
39 LUs

Registered Provider
13 PDHs

Given at Jacksonville, FL (Location) By Jacksonville District (Instructional District) December 3-4, 2003 (Date)

Jose Toro
CESAJ-CO-CQ Facilitator (904) 232-3688

Gary F. Graham
Chief, USACE Professional Development Support Center

THIS CERTIFICATE EXPIRES FIVE YEARS FROM DATE OF ISSUE

US Army Corps of Engineers

Jacksonville District

CERTIFICATE

This to certify that

SCOTT MORRIS

Completed 6 hours of training on Resident Management System (RMS) construction information system and Contractor's Quality Control System (QCS) Module

Given at Jacksonville, FL 5 December 2003

Bruce B Pastorini

Bruce B. Pastorini
CESAJ-CO-CQ 904-232-1699
RMS Training Instructor

Scott A. Morris

Professional Qualifications

Mr. Morris is a Project Director/ Area Manager with over 29 years of diverse civil engineering, project management and construction experience, with the last 20 years focused on executing environmental remedial designs. Mr. Morris' career began in 1982 when he entered the US Navy Civil Engineer Corps. Through subsequent increasingly responsible positions with both public organizations and private firms, Mr. Morris has gained a uniquely broad range of experience and skills. His excellent communication skills, effective team building ability and "can do" attitude, enables him to achieve optimal results from his team and the programs and projects he oversees. Projects Mr. Morris has been responsible for range from large, equipment intensive, soil removal projects, to highly technical and innovative remediation systems. Mr. Morris' has hands on experience in all aspects of project and program management, including technical approach development, design support, cost estimating, workplan preparation, scheduling, procurement, field activities and construction, subcontractor management, cost tracking and control, invoicing, regulatory interface, client liaison, health and safety and project reporting.

Education

Masters of Business Administration, New Hampshire College; 1984
Bachelor of Science, Civil Engineering, University of Arizona; 1982

Additional Training:
40 hour OSHA 29CFR 1910.120, 1992
Annual 8 hour OSHA refresher training, annually current since 1992
Hazardous Waste Supervisor, 8 hour, 1994
Safety Officer, 40 hours, 1986

Registrations/Certifications

Professional Engineer (PE), California #C49455
Professional Engineer (PE), Arizona #25590
Professional Engineer (PE), Georgia #20962
Professional Engineer (PE), Florida #56421
Professional Engineer (PE), New York #83867

Experience and Background

August 2005 – present
Project Director/ Area Manager for the Construction and Environmental Services Division of ARCADIS in the New York City Area.

Manages ARCADIS's New Hyde Park office, just east of New York City. Resource coordinator for remediation and environmental field service needs in the New York City and the tri-state area. Steward of the behavior based safety program.

Manages all environmental systems operation and maintenance, investigation, remediation and construction activities at Lockheed Martin's former defense manufacturing facility in New Hyde Park, New York. The average annual budget for this environmental work is $15 million/year. Projects associated with this 94 acre former 1.4 million-square-foot manufacturing facility inlcude;

- Upgrade and operation of two 700 gpm pump and treat systems
- Operation of a soil vapor extraction (SVE) system
- Construction and operation sub slab depressurization system (SSDS) for a one million square foot facility. The system is made up of 3-50hp blowers, motor control center, 67 extraction points with motorized control valves, and 8000 LF of steel piping in and on the roof of the building.
- Construction of monitoring wells, and sampling of 120 monitoring wells in and around a 600-acre groundwater plume that extends into the local community and groundwater drinking supply. Wells range from 120' deep to over 300' deep.
- Various soil remediation projects around the facility
- Conducing vapor intrusion studies, and conducting various soil sampling investigations
- Interaction with impacted building tenants, property owner, local water districts, school districts, and the New York State Department of Environmental Conservation (NYSDEC) and Department of Health (DOH).

Construction Manager for National Grid's $50MM cleanup of a former Manufactured Gas Plant (MGP) at Rockaway Park, NY. The on-going project involved removal of 156,000 tons of impacted soil on the 9.4 acre site, all done under a sprung structure which was moved 12 times. The structure was air purified with 5 trailer mounted 20,000# carbon filtration units. Over 9,000 LF of steel sheet piles were installed, a DNAPL barrier steel sheet wall installed to 120 feet deep and the perimeter was continuously monitoring with fixed air monitoring stations per an approved community air monitoring plan (CAMP).

March 2004 – July 2005
Resident Engineer for National Grid's remediation of former MGP site in Hudson, NY
Served as onsite resident engineer for $10 million sediment and soil remediation project of a former manufactured gas plant (MGP) site adjacent to the Hudson River. This 18-month remediation project required installation of more than 1,800 LF of water-tight sheeting in the Hudson River and adjacent bank, installation of a temporary 500 gpm water treatment system, erection of a moveable 120-foot spanning sprung fabric structure with a vapor treatment system, and 20-foot-deep excavations to remove more than 40,000 tons of coal tar-impacted sediments and soils. This highly visible and sensitive project required daily coordination with the NYSDEC, city officials, the prime remediation contractor and subcontractors, design engineers, and client representatives.

February 2000 – March 2004
Remediation Manager for Untied Technologies, Pratt & Whitney, West Palm Beach, Florida Facility.
This facility currently tests jet and rocket engines and has worked on various aspects of aircraft engines since the 1950's. As a result of the relocation of a majority of operations to the Connecticut facility, the vacated buildings and land are being cleaned-up and sold. With this downsizing, Mr. Morris was brought in on short notice to perform the active oversight and management of the extensive remediation and assessment program, a $10 million per year undertaking. It is noteworthy to point out the Mr. Morris now manages a program that had previously been run by four environmental professionals, who recently

years and numerous releases. The facilities current "in operation" status and numerous active permits add further challenge to working on the site.

September 1997 - February 2000
Remediation Project Manager, NAS North Island, San Diego, California
Mr. Morris was specifically brought to Naval Air Station (NAS) North Island to repair a strained relationship with the Southwest Division, Naval Facilities Engineering Command (SWDIV) Remedial Action Contract (RAC) on-site management team. NAS North Island is a highly visible Navy Megabase, which is home to two of the Navy's nuclear aircraft carriers. In addition, it is designated as a Navy Environmental Leadership Program (NELP) base, due to the complexity of its environmental issues and its leading edge approach to environmental work. Though the previous two Project Managers were dismissed by the client, Mr. Morris' "can-do" attitude, interpersonal skills and team player approach enabled he and his team to exceed the client's expectations. Mr. Morris' success can be attributed to his ability to motivate and optimize his project team and to bring together the talents of several Department of Defense (DOD) and Federal agencies, overseeing regulators and other contractors to work together to resolve problems and issues. This was demonstrated when Mr. Morris received two additional multimillion dollar projects in the final days prior to expiration of the 5-year RAC contract. In addition, Mr. Morris and his team received many Navy and IT awards for their implementation of innovative and cost saving remediation technologies. Project highlights include:

- ***TCE Groundwater Investigation and Remediation, NAS North Island, CA.*** Mr. Morris has successfully managed the investigation, design and initiation of a $3 million chemical oxidation pilot study. The site requiring remediation consists of a five foot thick Jet Propellant #5 (JP5), stoddard solvent and TCE plume with an accompanying mile long TCE contaminated groundwater plume, 80' beneath the Naval Aviation Depot at NAS North Island. Mr. Morris was successful at moving this complicated CERCLA Removal Action forward despite the numerous regulatory agencies involved, complex site conditions and critical facilities involved. Numerous innovative sampling and remediation techniques were utilized in the project including using a direct push SCAPS rig with an Army Corps of Engineers (COE) Hydrosparge II sampler. The sampler collects vapor samples via in-situ air sparing and then provides real time analysis by means of analyzing the vapors with an on-site GCMS. In addition, an innovative membrane interface probe, developed by the COE, was used for sampling. Also used was a United States Geological Survey (USGS) discrete multi-depth diffusion sampling technique for sampling the numerous monitoring wells. These sampling techniques significantly reduced the costs of the project. Pilot test remediation technologies included chemical oxidation for the TCE plume destruction and steam injection for the source removal.

- ***Steam Injection Remediation of TCE and Petroleum Contaminated Groundwater, NAS North Island, CA.*** At a site on the Navy base known as the "fiery marsh", Mr. Morris co-managed the multimillion soil and LNAPL remediation of volatile organic carbons including heavy concentrations of TCE at the former NAS North Island chemical and fuel disposal site. Soil was remediated using a SVE system and the free product recovery is being enhanced with steam injection into the water just below the LNAPL. This $3 million soil remediation and free product removal portion of the project is near completion, at which time groundwater remediation will begin.

- ***Low Level Radioactive Material (LLRM) Contamination Removal, NAS North Island, CA.*** Managed a Time Critical Removal Action to remove 75 cubic yards of Radium-226 and Cesium-137 contaminated soil from two LLRM storage sites. The remediation was undertaken to reduce risk to human health and the environment and remove the presence of radiation contamination on the base, in light of the Navy seeking public acceptance of a second nuclear carrier to be home ported at the base. The project was under close observation by the local community Restoration Advisory Board (RAB) due the sensitivity of the radiation contamination in proximity to the adjacent town. The project was completed on time, within budget and without incident.

- ***Assessment and Remediation of 9 UST's, NAS North Island, CA.*** Mr. Morris managed the $2 million investigation and remediation of 9 UST sites contaminated by various solvents and petroleum products resulting in soil and groundwater contamination consisting of vinyl chloride, BTXE and lead. Remediation at the sites included excavation of soil, free product skimming, air sparging, soil vapor extraction, bio-venting, and natural attenuation monitoring. The project involved an emergency response during the Thanksgiving holiday when a construction contractor laying utilities to the aircraft carrier pier, dug into an unidentified petroleum free product plume and the multimillion dollar nuclear aircraft carrier pier construction project had to be halted in that area until the site could be cleaned up. Mr. Morris and his team received accolades for his responsiveness to the emergency clean-up situation.

- ***Mentor-Protégé, SWDIV San Diego, CA*** .Mr. Morris was the manager of a Mentor-Protégé relationship established between IT Corporation and MicroSearch Environmental, a small disadvantaged environmental firm in the San Francisco area. Mr. Morris arranged and oversaw needed mentoring to MicroSearch, including Project Management, Contact Administration, Subcontract Management, Health and Safety, Business Operations, Technical Training, Business Development and Marketing.

June 1995 - September 1997
Lead Project Manager, NAF Midway Island, Hawaii
Mr. Morris managed the Pacific Navy's largest environmental clean-up project and received EPA closure of the entire Naval Air Facility (NAF) Midway Island facility. He was base lead project manager for all Pacific Division Naval Facilities Engineering Command (PACDIV) Remedial Action Contract (RAC) and Naval Facilities Engineering Support Center (NFESC) RAC projects on Midway. Mr. Morris directly and simultaneously managed six large and technical challenging remediation projects on the remote and logistically challenging island of Midway. The six projects Mr. Morris managed had a contract value of over $48 million dollars, with one project alone having a work in place cost of $22 million. Mr. Morris led over 100 people at any one time to accomplish this fast tract clean-up of Midway so it could be turned over the Department of the Interior as a wildlife refuge under the Base Realignment And Closure (BRAC) program. The fast track clean-up was under the oversight of EPA Region 9, with representatives from the Department of Fish and Wildlife assisting with working around the numerous protected and endangered animals including the Albatross birds. Mr. Morris maintained an excellent safety record of 1154 consecutive days in the field with 314,000 man hours of heavy construction and remediation work without a lost time accident. Project experience includes:

- ***107 UST Removals, NAF Midway Island.*** Removal, cleaning and disposing of 107 underground storage tanks ranging in size up to 40,000 gallons from two remote islands at Midway. In

addition, 12,000 linear feet of fuel piping was removed and cleaned, with 10,000 additional feet of piping beneath runways, taxiways and roads grouted in place. Work had to be carefully scheduled around the million plus pairs of protected Albatross birds, which blanket the island for the majority of the year. Logistical challenges included sending all the heavy construction equipment that was needed to the island via barge. A mobile laboratory was set up on island to obtain real time chemical analysis, which also reduced costs to the Navy considerably. It is noteworthy to point out that the Midway laboratory is the only mobile lab the Navy had certified at that time. This $5.5 million dollar effort was accomplished under the NFESC RAC (formally NESSA RAC).

- ***BUST/AST Removal, NAF Midway Island.*** Removal, cleaning and disposing of 15 bulk underground storage (BUST) and above ground storage tanks (AST) ranging in size up to 2.3 million gallons at NAF Midway Island. Contents of the tanks varied from highly volatile aviation gasoline to heavy Bunker-C oil that was remediated by means of a stream boiler. The massive amount of steel and concrete was cleaned on site, with the steel shipped back to the mainland for scrap value. The sludge that could not be burned off was used in an asphalt batching process on the island. This asphalt was then used to pave roads on the island. This method of sludge remediation saved the US Navy over $350,000 compared to off site disposal. Execution of the project required disruption of large areas of land which were inhabited thousands of endangered and protected bird species, requiring careful planning, scheduling and precission field work. This $13 million dollar PACDIV RAC effort was accomplished without incident.

- ***$22 Million Fuel Farm Remediation, NAF Midway Island.*** Mr. Morris installed the world's largest in-situ fluid injection with vapor extraction (FIVE) system at the NAF Midway bulk fuel farm. The FIVE system successfully remediated an 80 acre site containing over 600,000 cubic yards of petroleum contaminated soil, contaminated groundwater and free product, which lay beneath the demolished fuel farm at the recently closed NAF Midway Island facility. This $22 million dollar effort involved installing 500 injection and extraction wells, eleven miles of buried piping ranging in size up to 30" and two massive process plants which handled flows of 30,000 cfm through two low temperature thermal desorption units which used recovered fuel to incinerate aromatic contaminates. Mitigation of ecological impacts played heavily into the design of the remediation system. The hot air injection piping had to be buried two feet the below ground surface so the eggs of the albatross birds and other burrowing birds would not be impacted by high soil temperatures. The precautions design efforts and consciences on-site work activities engineered to minimize the disruption to the endangered and protected wildlife was formally recognized by the US Fish and Wildlife Department, who were the on site care takers of the island wildlife. The system ran in a 24 hour a day operation mode for 9 months at which time the site was remediated to the EPA's satisfaction, and the site was closed.

- ***PCB/ DDT Remediation, NAF Midway Island.*** The project involved the removal and remediation of 2000 cubic yards of PCB contaminated soil and 1600 cubic yards of pesticide contaminated soil from 13 sites on two islands at Midway. This $5.3 million dollar PACDIV effort was innovatively completed by solidifying the PCB and pesticide contaminated soil with cement and then burying the solidified material on island verses off island transportation and treatment. The savings that resulted from the alternative treatment technology allowed newly discovered contaminated sites to be remediated with the original allocation of funds.

Appendix B Letters of Appointment

ARCADIS
Infrastructure, environment, facilities

ARCADIS U.S., Inc
630 Plaza Drive
Suite 100
Highlands Ranch
Colorado 80129
Tel 720 344 3500
Fax 720 344 3535
www arcadis-us.com

Mr. David Gomes
Senior Engineer
630 Plaza Dr. Suite 100,
Highlands Ranch, CO 80129

FEDERAL CONTRACTS

Subject:
Appointment as Quality Control Manager
Contract No. N62473-11-D-2226

Date:

Dear David:

Contact:
Dave Lamoureux

Phone:
757-873-4495

Email:
Dave.lamoureux@arcadis-us.com

Our ref:
3333PRMC.0000

You are hereby appointed to represent ARCADIS US, Inc., (ARCADIS) as the Quality Control Manager for the above referenced Contract with the US Navy, Naval Facilities Engineering Command, Southwest. (NAVFAC SW) You have been appointed to this position based on your past expertise and performance in similar roles. The diligent execution of these duties is a must in order for ARCADIS to provide the US Navy with the quality of service necessary for successful completion of the contract.

You or your approved alternate must be on the site of work performed by ARCADIS under this contract. Your specific duties as the Quality Control Manager are as follows:

- Be present on site at all times during the progression of work.
- Authority to immediately stop any segment of work which does not comply with the contract plans and specifications, and direct the removal and replacement of any defective work.
- Conduct daily inspection of work performed each day for compliance with plans and specifications.
- Certify daily that all materials and equipment delivered/installed in the work comply with contract plans and specifications. Certify daily that all work performed on the construction site and off the construction site conforms to plans and specifications. Report any deficiencies and remedial action planned and taken.

- Supervise and coordinate the inspection and tests made by the members of the Quality Control Organization including subcontractors.
- Assure QC staff is adequate to meet its responsibilities.
- Insure that all tests required are performed and the results reported. Indicate whether test results show the item tested conforms to contract requirements or not. Ensure corrective work achieves acceptable test results.
- Maintain at the job site a testing plan showing status of all tests required by the contracts.
- Authority to remove any individual from the site who fails to perform work in a skillful, safe and workmanlike manner or whose work does not comply with the contract plans and specifications.
- QC Manager has no authority to deviate from plans and specifications without prior approval, in writing, from the Contracting Officer or designated representative.
- Ensure that the Contractor's Quality Control Organization is adequately staffed with qualified personnel to perform all the detailed inspections and testing specified in the plans and specifications.
- Maintain a copy of the approved QC Plan on file at the job site complete with up-to-date approved revisions/filled-in log of submittals.
- Maintain at the job site an up-to-date QC Submittal Status Log showing status of all submittals required by the contract.
- Maintain at the job site an up-to-date Noncompliance Check-off List (Log of deficiencies) on all nonconforming work.
- Assure that As-Built Drawings are kept current by showing all deviations made from the contract drawings on a daily basis.

Sincerely,

ARCADIS U.S., Inc

Philip Nicolay, PG
Vice President
Principal in Charge NAVFAC SW

Copies:
Don Clause, ARCADIS
Dave Lamoureux, ARCADIS

ARCADIS
Infrastructure, environment, facilities

ARCADIS U.S., Inc
630 Plaza Drive
Suite 100
Highlands Ranch
Colorado 80129
Tel 720 344 3500
Fax 720 344 3535
www arcadis-us.com

Mr. James McCann
Senior Scientist
17-17 Route 208 North,
Fairlawn, NJ 07410

FEDERAL CONTRACTS

Subject:
Appointment as Alternate Quality Control Manager
Contract No. N62473-11-D-2226

Date:

Contact:
Dave Lamoureux

Phone:
757-873-4495

Email:
Dave.lamoureux@arcadis-us.com

Our ref:
3333PRMC.0000

Dear Jim:

You are hereby appointed to represent ARCADIS US, Inc., (ARCADIS) as the Alternate Quality Control Manager for the above referenced Contract with the US Navy, Naval Facilities Engineering Command, Southwest. (NAVFAC SW) You have been appointed to this position based on your past expertise and performance in similar roles. The diligent execution of these duties is a must in order for ARCADIS to provide the US Navy with the quality of service necessary for successful completion of the contract.

You will serve as alternate to the primary Quality Control Manager, David Gomes, and must be on the site of work performed by ARCADIS under this contract. Your specific duties as the Alternate Quality Control Manager in the event that David is not available to perform as Quality Control Manager are as follows:

- Be present on site at all times during the progression of work.
- Authority to immediately stop any segment of work which does not comply with the contract plans and specifications, and direct the removal and replacement of any defective work.
- Conduct daily inspection of work performed each day for compliance with plans and specifications.
- Certify daily that all materials and equipment delivered/installed in the work comply with contract plans and specifications. Certify daily that all work performed on the construction site and off the construction site conforms to plans and specifications. Report any deficiencies and remedial action planned and taken.

- Supervise and coordinate the inspection and tests made by the members of the Quality Control Organization including subcontractors.
- Assure QC staff is adequate to meet its responsibilities.
- Insure that all tests required are performed and the results reported. Indicate whether test results show the item tested conforms to contract requirements or not. Ensure corrective work achieves acceptable test results.
- Maintain at the job site a testing plan showing status of all tests required by the contracts.
- Authority to remove any individual from the site who fails to perform work in a skillful, safe and workmanlike manner or whose work does not comply with the contract plans and specifications.
- QC Manager has no authority to deviate from plans and specifications without prior approval, in writing, from the Contracting Officer or designated representative.
- Ensure that the Contractor's Quality Control Organization is adequately staffed with qualified personnel to perform all the detailed inspections and testing specified in the plans and specifications.
- Maintain a copy of the approved QC Plan on file at the job site complete with up-to-date approved revisions/filled-in log of submittals.
- Maintain at the job site an up-to-date QC Submittal Status Log showing status of all submittals required by the contract.
- Maintain at the job site an up-to-date Noncompliance Check-off List (Log of deficiencies) on all nonconforming work.
- Assure that As-Built Drawings are kept current by showing all deviations made from the contract drawings on a daily basis.

Sincerely,

ARCADIS U.S., Inc

Philip Nicolay, PG
Vice President
Principal in Charge NAVFAC SW

Copies:
Don Clause, ARCADIS
Dave Lamoureux, ARCADIS

Appendix C Quality Control Forms

CONTRACTOR QUALITY CONTROL REPORT

(ATTACH ADDITIONAL SHEETS IF NECESSARY)

DATE

REPORT NO

PHASE | CONTRACT NO | CONTRACT TITLE

PREPARATORY

WAS PREPARATORY PHASE WORK PREFORMED TODAY? YES ☐ NO ☐

IF YES, FILL OUT AND ATTACH SUPPLEMENTAL PREPARATORY PHASE CHECKLIST.

Schedule Activity No.	Definable Feature of Work	Index #

INITIAL

WAS INITIAL PHASE WORK PREFORMED TODAY? YES ☐ NO ☐

IF YES, FILL OUT AND ATTACH SUPPLEMENTAL INITIAL PHASE CHECKLIST.

Schedule Activity No.	Definable Feature of Work	Index #

FOLLOW-UP

WORK COMPLIES WITH CONTRACT AS APPROVED DURING INITIAL PHASE? YES ☐ NO ☐

WORK COMPLIES WITH SAFETY REQUIREMENTS? YES ☐ NO ☐

Schedule Activity No.	Description of Work, Testing Performed & By Whom, Definable Feature of Work, Specification Section, Location and List of Personnel Present

REWORK ITEMS IDENTIFIED TODAY (NOT CORRECTED BY CLOSE OF BUSINESS)

Schedule Activity No.	Description

REWORK ITEMS CORRECTED TODAY (FROM REWORK ITEMS LIST)

Schedule Activity No.	Description

REMARKS (Also Explain Any Follow-Up Phase Checklist Item From Above That Was Answered "NO"), Manuf. Rep On-Site, etc.

Schedule Activity No.	Description

On behalf of the contractor, I certify that this report is complete and correct and equipment and material used and work performed during this reporting period is in compliance with the contract drawings and specifications to the best of my knowledge except as noted in this report.

AUTHORIZED QC MANAGER AT SITE DATE

GOVERNMENT QUALITY ASSURANCE REPORT

DATE

QUALITY ASSURANCE REPRESENTATIVE'S REMARKS AND/OR EXCEPTIONS TO THE REPORT

GOVERNMENT QUALITY ASSURANCE MANAGER DATE

CONTRACTOR QUALITY CONTROL REPORT

(CONTINUATION SHEET)

(ATTACH ADDITIONAL SHEETS IF NECESSARY)

DATE

REPORT NO.

PHASE	CONTRACT NO	CONTRACT TITLE

FOLLOW-UP

WORK COMPLIES WITH CONTRACT AS APPROVED DURING INITIAL PHASE? YES ☐ NO ☐

WORK COMPLIES WITH SAFETY REQUIREMENTS? YES ☐ NO ☐

Schedule Activity No.	Description of Work, Testing Performed & By Whom, Definable Feature of Work, Specification Section, Location and List of Personnel Present

REMARKS (Also Explain Any Checklist Item From Above That Was Answered "NO"), Manuf. Rep. On-Site, etc.

Schedule Activity No.	Description

2496/2A (9/98)

SHEET OF

CONTRACTOR PRODUCTION REPORT

(ATTACH ADDITIONAL SHEETS IF NECESSARY)

CONTRACT NO	TITLE AND LOCATION		DATE
			REPORT NO
CONTRACTOR		SUPERINTENDENT	
AM WEATHER	PM WEATHER	MAX TEMP F	MIN TEMP F

WORK PERFORMED TODAY

Schedule Activity No.	WORK LOCATION AND DESCRIPTION	EMPLOYER	NUMBER	TRADE	HRS

JOB SAFETY

WAS A JOB SAFETY MEETING HELD THIS DATE? ☐ YES ☐ NO
(If YES attach copy of the meeting minutes)

WERE THERE ANY LOST TIME ACCIDENTS THIS DATE? ☐ YES ☐ NO
(If YES attach copy of completed OSHA report)

WAS CRANE/MANLIFT/TRENCHING/SCAFFOLD/HV ELEC/HIGH WORK/ HAZMAT WORK DONE? ☐ YES ☐ NO
(If YES attach statement or checklist showing inspection performed.)

WAS HAZARDOUS MATERIAL/WASTE RELEASED INTO THE ENVIRONMENT? ☐ YES ☐ NO
(If YES attach description of incident and proposed action.)

TOTAL WORK HOURS ON JOB SITE. THIS DATE, INCL CON'T SHEETS	
CUMULATIVE TOTAL OF WORK HOURS FROM PREVIOUS REPORT	
TOTAL WORK HOURS FROM START OF CONSTRUCTION	

Schedule Activity No.	LIST SAFETY ACTIONS TAKEN TODAY/SAFETY INSPECTIONS CONDUCTED

☐ SAFETY REQUIREMENTS HAVE BEEN MET.

EQUIPMENT/MATERIAL RECEIVED TODAY TO BE INCORPORATED IN JOB (INDICATE SCHEDULE ACTIVITY NUMBER)

Schedule Activity No.	Submittal #	Description of Equipment/Material Received

CONSTRUCTION AND PLANT EQUIPMENT ON JOB SITE TODAY. INDICATE HOURS USED AND SCHEDULE ACTIVITY NUMBER.

Schedule Activity No.	Owner	Description of Construction Equipment Used Today (incl Make and Model)	Hours Used

Schedule Activity No.	REMARKS

CONTRACTOR/SUPERINTENDENT DATE

4296/1 (9/98)

SHEET OF

CONTRACTOR PRODUCTION REPORT

(CONTINUATION SHEET)

CONTRACT NO	TITLE AND LOCATION	DATE
		REPORT NO

WORK PERFORMED TODAY

Schedule Activity No.	WORK LOCATION AND DESCRIPTION	EMPLOYER	NUMBER	TRADE	HRS

Schedule Activity No.	LIST SAFETY ACTIONS TAKEN TODAY/SAFETY INSPECTIONS CONDUCTED

EQUIPMENT/MATERIAL RECEIVED TODAY TO BE INCORPORATED IN JOB (INDICATE SCHEDULE ACTIVITY NUMBER)

Schedule Activity No.	Submittal #	Description of Equipment/Material Received

CONSTRUCTION AND PLANT EQUIPMENT ON JOB SITE TODAY. INDICATE HOURS USED AND SCHEDULE ACTIVITY NUMBER.

Schedule Activity No.	Owner	Description of Construction Equipment Used Today (incl Make and Model)	Hours Used

Schedule Activity No.	REMARKS

INCLUDE ALL PERSONNEL WORK HOURS IN THE WORK PERFORMED SECTION ON THIS SHEET INTO THE FRONT CONTRACTOR PRODUCTION REPORT

4296/1A (9/98)

SHEET OF

PREPARATORY PHASE CHECKLIST

(CONTINUED ON SECOND PAGE)

CONTRACT NO	DEFINABLE FEATURE OF WORK	SPEC SECTION	DATE
		SCHEDULE ACT NO.	INDEX #

PERSONNEL PRESENT

GOVERNMENT REP NOTIFIED _____ HOURS IN ADVANCE: YES ☐ NO ☐

NAME	POSITION	COMPANY/GOVERNMENT

SUBMITTALS

REVIEW SUBMITTALS AND/OR SUBMITTAL REGISTER. HAVE ALL SUBMITTALS BEEN APPROVED? YES ☐ NO ☐

IF NO, WHAT ITEMS HAVE NOT BEEN SUBMITTED? _____

ARE ALL MATERIALS ON HAND? YES ☐ NO ☐

IF NO, WHAT ITEMS ARE MISSING? _____

CHECK APPROVED SUBMITTALS AGAINST DELIVERED MATERIAL. (THIS SHOULD BE DONE AS MATERIAL ARRIVES.)

COMMENTS: _____

MATERIAL STORAGE

ARE MATERIALS STORED PROPERLY? YES ☐ NO ☐

IF NO, WHAT ACTION IS TAKEN? _____

SPECIFICATIONS

REVIEW EACH PARAGRAPH OF SPECIFICATIONS.

DISCUSS PROCEDURE FOR ACCOMPLISHING THE WORK.

CLARIFY ANY DIFFERENCES.

PRELIMINARY WORK & PERMITS

ENSURE PRELIMINARY WORK IS CORRECT AND PERMITS ARE ON FILE.

IF NOT, WHAT ACTION IS TAKEN? _____

PREPARATORY PHASE CHECKLIST

(CONTINUED FROM FIRST PAGE)

CONTRACT NO	DEFINABLE FEATURE OF WORK	SPEC SECTION	DATE
		SCHEDULE ACT NO.	INDEX #

TESTING

IDENTIFY TEST TO BE PERFORMED, FREQUENCY, AND BY WHOM.

WHEN REQUIRED?

WHERE REQUIRED?

REVIEW TESTING PLAN.

HAS TEST FACILITIES BEEN APPROVED?

SAFETY

ACTIVITY HAZARD ANALYSIS APPROVED? YES ☐ NO ☐

REVIEW APPLICABLE PORTION OF EM 385-1-1.

MEETING COMMENTS

NAVY/ROICC COMMENTS DURING MEETING.

OTHER ITEMS OR REMARKS

OTHER ITEMS OR REMARKS:

QC MANAGER DATE

4296/2B2 9/98 (SHEET-2) SHEET OF

INITIAL PHASE CHECKLIST

SPEC SECTION	DATE

CONTRACT NO	DEFINABLE FEATURE OF WORK	SCHEDULE ACT NO.	INDEX #

PERSONNEL PRESENT

GOVERNMENT REP NOTIFIED _____ HOURS IN ADVANCE: YES ☐ NO ☐

NAME	POSITION	COMPANY/GOVERNMENT

PROCEDURE COMPLIANCE

IDENTIFIY FULL COMPLIANCE WITH PROCEDURES IDENTIFIED AT PREPARATORY. COORDINATE PLANS, SPECIFICATIONS, AND SUBMITTALS.

COMMENTS: _____

PRELIMINARY WORK

ENSURE PRELIMINARY WORK IS COMPLETE AND CORRECT. IF NOT, WHAT ACTION IS TAKEN?

WORKMANSHIP

ESTABLISH LEVEL OF WORKMANSHIP.

WHERE IS WORK LOCATED? _____

IS SAMPLE PANEL REQUIRED? YES ☐ NO ☐

WILL THE INIITAL WORK BE CONSIDERED AS A SAMPLE? YES ☐ NO ☐

(IF YES, MAINTAIN IN PRESENT CONDITION AS LONG AS POSSIBLE AND DESCRIBE LOCATION OF SAMPLE)

RESOLUTION

RESOLVE ANY DIFFERENCES.

COMMENTS: _____

CHECK SAFETY

REVIEW JOB CONDITIONS USING EM 385-1-1 AND JOB HAZARD ANALYSIS

COMMENTS: _____

OTHER

OTHER ITEMS OR REMARKS

QC MANAGER _____ DATE

4296/2C 9/98

SHEET OF

Appendix D Testing Plan and Log

TESTING PLAN AND LOG

CONTRACT NUMBER			PROJECT TITLE AND LOCATION							CONTRACTOR	
SPECIFICATION SECTION AND PARAGRAPH NUMBER	SCHEDULE ACTIVITY ID	TEST REQUIRED	ACCREDITED/ APPROVED LAB		SAMPLED BY	TESTED BY	LOCATION OF TEST		DATE COMPLETED	DATE FORWARDED TO CONTR. OFF.	REMARKS
			YES	NO			ON SITE	OFF SITE			

4296/4 9/98

SHEET OF

Appendix E Submittal Register

Submittal Register																		Contract Number
Hunter's Point Parcel G, San Francisco, California						Contractor												
						Contractor Schedule Dates			Contractor Action			Approving Authority						
Activity No.	Transmittal No.	Spec Section No.	Description of Item Submitted	Paragraph No.	Classification - Gov't or A/E Reviewer	Submit	Approval Neeed by	Material Needed By	Action Code	Date of Action	FWD to APPR Author/ Date Received from Contr	Date to Forward to Other Reviewer	Date Received from Other Reviewer	Action Code	Date of Action	Mailed to Contr/ Date Received from Appr Author	Remarks
(a)	(b)	(c)	(d)	(e)	(f)	(g)	(h)	(i)	(j)	(k)	(l)	(m)	(n)	(o)	(p)	(q)	(r)
		01 30 00	SD-01, Preconstruction Submittal - List of Contact Personnel	1.1.1													
		01 30 00	SD-01, Preconstruction Submittal - View Location Map	1.1.1													
		01 30 00	SD-01, Preconstruction Submittal -Contact Personnel List	1.1.1													
		01 30 00	SD-01, Preconstruction Submittal -Vehicle List	1.1.1													
		01 30 00	SD-01, Preconstruction Submittal -Site Specific Health and Safety Plan	1.1.1													
		01 30 00	SD-01, Preconstruction Submittal -Imported Fill Sampling Plan	1.1.1													
		01 30 00	SD-01, Preconstruction Submittal -Air Monitoring Plan	1.1.1													
		01 30 00	SD-01, Preconstruction Submittal -Construction Stormwater Pollution Prevention Plan	1.1.1													
		01 32 16.00 20	SD-01, Preconstruction Submittals - Construction schedule	1.1.1													
		01 32 16.00 20	SD-01, Preconstruction Submittals - Material delivery schedule	1.1.1													
		01 32 16.00 20	SD-06, Field Test Reports - Progress and completion	1.1.2													
		01 33 00	SD-11, Closeout Submittals - Submittal register	1.3.1													
		01 33 00	SD-11, Closeout Submittals - As-built drawings	1.3.1													
		01 33 00	SD-11, Closeout Submittals - As-built field summary report	1.3.1													
		01 35 29.13	SD-01, Preconstruction Submittals - Site health and safety plan	1.3.1													
		01 35 29.13	SD-02, Shop Drawings - Work Zones	1.3.2													
		01 35 29.13	SD-02, Shop Drawings - Decontamination Facilities	1.3.2													
		01 35 29.13	SD-03, Product Data - Site Control Log	1.3.3													
		01 35 29.13	SD-03, Product Data - Employee Certificates	1.3.3													

Activity No.	Transmittal No.	Spec Section No.	Description of Item Submitted	Paragraph No.	Classification - Gov't or A/E Reviewer	Contractor Schedule Dates			Contractor Action			Approving Authority				Mailed to Contr/ Date Received from Appr Author	Remarks
						Submit	Approval Neeed by	Material Needed By	Action Code	Date of Action	FWD to APPR Author/ Date Received from Contr	Date to Forward to Other Reviewer	Date Received from Other Reviewer	Action Code	Date of Action		
(a)	(b)	(c)	(d)	(e)	(f)	(g)	(h)	(i)	(j)	(k)	(l)	(m)	(n)	(o)	(p)	(q)	(r)
		01 35 29.13	SD-06, Field Test Reports - Air Sampling Results	1.3.4													
		01 35 29.13	SD-11, Closeout Submittals - Safety and Health Phase-Out Report	1.3.5													
		01 45 02	SD-01, Preconstruction Submittal - Quality Control (QC) plan	1.3.1													
		01 50 00	SD-02 Drawings - Traffic control plan	1.2.1													
		01 50 00	SD-02 Drawings - Project sign	1.2.1													
		01 57 19.00 20	SD-01, Preconstruction Submittals - Environmental Protection Plan	1.4.1													
		01 57 19.00 20	SD-01, Preconstruction Submittals - Precontruction Survey Report	1.4.1													
		1 57 19.00 20	SD-07, Certificates - Solid waste disposal permit/manifests	1.4.2													
		1 57 19.00 20	SD-07, Certificates - Disposal permit/manifests for hazardous waste	1.4.2													
		1 57 19.00 20	SD-07, Certificates - Erosion and Sediment Control Inspection Reports	1.4.2													
		02 41 00	SD-01 Pre-construction Submittal - Clearing Plan	1.2.1													
		03 30 00	SD-05 Design Data - Concrete Mix Design for 3,000 psi	1.3.1													
		03 30 00	SD-07 Certificates - Cement	1.3.2													
		03 30 00	SD-07 Certificates - Aggregate	1.3.2													
		03 30 00	SD-07 Certificates - Admixtures	1.3.2													
		03 30 00	SD-07 Certificates - Welded Wire Fabric	1.3.2													
		03 30 00	SD-08 Manufacturers Instructions - Cementitious Patching Mortar	1.3.3													
		10 14 01	SD-02, Drawings - Warning sign	1.2.1													
		31 00 00	SD-01, Preconstruction Submittals - Sampling and Analysis Plan	1.3.1													

Activity No.	Transmittal No.	Spec Section No.	Description of Item Submitted	Paragraph No.	Classification - Gov't or A/E Reviewer	Contractor Schedule Dates			Contractor Action			Approving Authority				Mailed to Contr/ Date Received from Appr Author	Remarks
						Submit	Approval Neeed by	Material Needed By	Action Code	Date of Action	FWD to APPR Author/ Date Received from Contr	Date to Forward to Other Reviewer	Date Received from Other Reviewer	Action Code	Date of Action		
(a)	(b)	(c)	(d)	(e)	(f)	(g)	(h)	(i)	(j)	(k)	(l)	(m)	(n)	(o)	(p)	(q)	(r)
		31 00 00	SD-01, Preconstruction Submittals - Materials Handling Plan	1.3.1													
		31 00 00	SD-04 Samples - Fill	1.3.2													
		31 00 00	SD-06, Field Test Reports - Fill Material Tests	1.3.3													
		31 00 00	SD-06, Field Test Reports - Confirmation Screening Sampling Results	1.3.3													
		31 00 00	SD-06, Field Test Reports - Borrow Source Assessments	1.3.3													
		31 00 00	SD-06, Field Test Reports - Moisture Content and Density Test in Place Fill	1.3.3													
		31 00 00	SD-07, Certificates - California Registered Civil Engineer or Geologist certification	1.3.4													
		31 00 00	SD-11, Closeout Submittals - Survey information on permanent local site monuments	1.3.5													
		32 01 17.16	SD-03 Product Data - Installation of Sealant	1.3.1													
		32 01 17.16	SD-04 Samples - Materials	1.3.2													
		32 01 17.16	SD-06 Test Reports - Test Requirements	1.3.3													
		32 10 00	SD-04 Samples - Field-Constructed Mockup	1.3.1													
		32 10 00	SD-04 Samples - Uncompacted Mix	1.3.1													
		32 10 00	SD-04 Samples - Pavement cores	1.3.1													
		32 10 00	SD-06 Test Reports - Bituminous Mix - Trial batch reports	1.3.2													
		32 10 00	SD-06 Test Reports - Bituminous Mix - Mix design	1.3.2													
		32 10 00	SD-06 Test Reports - Bituminous Mix - Asphalt concrete	1.3.2													
		32 10 00	SD-06 Test Reports - Wear Course - Density	1.3.2													
		32 10 00	SD-06 Test Reports - Wear Course - Thickness	1.3.2													
		32 10 00	SD-06 Test Reports - Wear Course - Straightedge test	1.3.2													

Activity No.	Transmittal No.	Spec Section No.	Description of Item Submitted	Paragraph No.	Classification - Gov't or A/E Reviewer	Contractor Schedule Dates			Contractor Action			Approving Authority				Mailed to Contr/ Date Received from Appr Author	Remarks
						Submit	Approval Neeed by	Material Needed By	Action Code	Date of Action	FWD to APPR Author/ Date Received from Contr	Date to Forward to Other Reviewer	Date Received from Other Reviewer	Action Code	Date of Action		
(a)	(b)	(c)	(d)	(e)	(f)	(g)	(h)	(i)	(j)	(k)	(l)	(m)	(n)	(o)	(p)	(q)	(r)
		32 10 00	SD-07 Certificates - Asphalt mix delivery record	1.3.3													
		32 10 00	SD-07 Certificates - Asphalt concrete and material sources	1.3.3													
		32 31 26	SD-03, Manufacturer's Catalog Data - Fencing components	1.4.1													
		32 31 26	SD-03, Manufacturer's Catalog Data - Accessories	1.4.1													
		32 31 26	SD-03, Manufacturer's Catalog Data - Galvanized woven wire mesh	1.4.1													
		32 31 26	SD-03, Manufacturer's Catalog Data - Fence fabric	1.4.1													
		32 31 26	SD-11, Closeout - Padlock keys	1.4.2													
		32 31 26	SD-11, Closeout - Padlocks	1.4.2													
		33 24 13	SD-03, Product Data - Casing	1.2.1													
		33 24 13	SD-03, Product Data - Screen	1.2.1													
		33 24 13	SD-03, Product Data - Filter Pack	1.2.1													
		33 24 13	SD-03, Product Data - Bentonite	1.2.1													
		33 24 13	SD-03, Product Data - Cement	1.2.1													
		33 24 13	SD-03, Product Data - Protective Cover	1.2.1													
		33 24 13	SD-11, Closeout Submittal - horizontal location (each well)	1.2.2													
		33 24 13	SD-11, Closeout Submittal - TOC elevation (each well)	1.2.2													
		33 24 13	SD-11, Closeout Submittal - adjacent ground elevation each well)	1.2.2													
		33 24 13	SD-11, Closeout Submittal - padlock keys (each well)	1.2.2													
		33 24 13	SD-11, Closeout Submittal - padlock keys (each well)	1.2.2													

ARCADIS

APPENDIX C

Traffic Control Plan

Department of the Navy
Base Realignment and Closure Program
Management Office West

FINAL
Appendix C
Traffic Control Plan
for Parcel G, Hunters Point Naval Shipyard, San Francisco, California

December 2012

ARCADIS

Scott Morris, PE
Project Manager

FINAL Appendix C
Traffic Control Plan
for Parcel G, Hunters Point Naval Shipyard, San Francisco, California

Prepared for:
Department of the Navy
Base Realignment and Closure Program
Management Office West

Prepared by:
ARCADIS U.S., Inc.
9095 Rio San Diego Drive
#240
San Diego
California 92108
Tel 619 291 7800 x21
Fax 619 291 5400

Our Ref.:
CA000776.0002.00002

Date:
December 2012

This document is intended only for the use of the individual or entity for which it was prepared and may contain information that is privileged, confidential and exempt from disclosure under applicable law. Any dissemination, distribution or copying of this document is strictly prohibited.

Acronyms and Abbreviations iii

1. Introduction 1

2. Site Transportation Information 1

3. Traffic Control Compliance 2

3.1 Traffic Safety Measures 3

3.2 Traffic Control 5

3.2.1 Placement of Traffic Control Devices 6

4. References 6

Figures

Figure 1 Temporary Traffic Control Plan

Figure 2 Import Material Truck Haul Route

Acronyms and Abbreviations

AB	aggregate base
AC	asphaltic concrete
ARCADIS	ARCADIS U.S., Inc.
Caltrans	California Department of Transportation
City	City and County of San Francisco
CSO	Caretaker Site Office
HPNS	Hunters Point Naval Shipyard
MUTCD	Manual on Uniform Traffic Control Devices
Navy	Department of the Navy
RA	remedial action
RAWP	Remedial Action Work Plan
ROICC	Resident Officer in Charge of Construction
RPM	Remedial Project Manager
TCP	Traffic Control Plan

1. Introduction

ARCADIS U.S., Inc. (ARCADIS) has prepared this Traffic Control Plan (TCP) for the remedial action (RA) at Parcel G, Hunters Point Naval Shipyard (HPNS), San Francisco, California. This TCP discusses transportation activities at HPNS and the traffic safety and traffic control measures that will be followed during the RA.

Traffic volume and circulation at HPNS fall under the purview of the Department of the Navy's (Navy's) Caretaker Site Office (CSO) and Resident Officer in Charge of Construction (ROICC). This TCP will be submitted to the ROICC, the Navy's Remedial Project Manager (RPM), and CSO personnel before the start of fieldwork, as appropriate.

The purpose of this TCP is to ensure the safety and convenience of motorists, pedestrians, and workers during construction activities associated with implementation of the RA. This TCP shall be reviewed by all site field personnel prior to field activities. A copy of this TCP shall be maintained at the site at all times.

2. Site Transportation Information

Specific details of the RA tasks are presented in the Remedial Action Work Plan (RAWP) for Parcel G. During construction activities on Parcel G, eastern portions of Manseau Street will be closed for the duration of the project (Figure 1). Traffic access to Parcels C, D-1, G, E, E-2, UC-2, and UC-3 will temporarily be diverted to Spear Avenue (Figure 1). H Street, Cochrane Street, Morrell Street, and Hussey Street between Spear Avenue and Manseau Street will be closed for the duration of the RA construction work. All traffic to and from Parcel D will be diverted to I Street. Detour signs will be posted mapping out the temporary routes for vehicles.

The following RA tasks have the potential to impact traffic flow at HPNS due to the use of heavy equipment, high volume of truck traffic, or encroachment of site activities on roadways:

- Mobilization of equipment and support vehicles to and from the site;
- Import of aggregate base (AB) material and asphalt concrete (AC) to the work area by truck via city roads; and
- Mobilization of paving equipment.

Truck routes as well as the locations of the support zones are shown on Figures 1 and 2. Imported AB will primarily be routed to the work area, as it is needed, where it will be directly placed and compacted or it will be stockpiled in the open area in the center of Parcel G. As an estimate, approximately 600 truck loads will be required to import the aggregate base material needed for the project assuming 25 tons per truck load. Importing of aggregate is assumed occur over 20 to 30 work days leading to approximately 20 to 30 loads per day. All excess soil excavated from the work zone will be stored as necessary in the southeast corner of Parcel G and managed in accordance with the Storm Water Pollution Prevention Plan (Appendix E of the RAWP). Truck routes will be reviewed and modified, as necessary, prior to and during mobilization. If access routes change before or during construction, relevant portions of this TCP will be revised accordingly. Any changes to this TCP will be made in coordination with the Navy CSO, ROICC, and Remedial Project Manager (RPM). The project team will work closely with the Navy to coordinate all construction activities that may generate traffic to avoid conflicts with other activities at HPNS.

On-site traffic will primarily consist of excavation and hauling equipment with some paving equipment. A small amount of non-construction traffic is anticipated during site activities, including vehicles used by Navy personnel, representatives from the regulatory agencies, delivery persons, etc. Non-construction traffic will be limited to the support zones and primary routes unless coordinated with the Construction Manager. Both on-site and off-site roads will be used for mobilization, demobilization, and transportation of materials and equipment to and from the site. Figures 1 and 2 show the proposed truck haul routes and locations of traffic control devices for this project.

For activities where equipment will be working near operating roadways, proper traffic control devices will be used, as necessary, to ensure minimal impact to traffic flow. Traffic control devices are further discussed in the following sections.

3. Traffic Control Compliance

Traffic control devices placed and maintained on all streets and highways in California are required by Section 21400 of the California Vehicle Code to conform to the California Manual on Uniform Traffic Control Devices (MUTCD) published by the California Department of Transportation (Caltrans 2012). This TCP was developed to ensure adequate consideration for the safety and convenience of motorists, pedestrians, and workers during construction.

Any traffic control devices deemed necessary for the project would first be approved by the ROICC, CSO, and the RPM. Any devices that require installation on City and County of San Francisco (City) property will require approval from the City in advance of site work.

3.1 Traffic Safety Measures

Chapter 6B of the MUTCD provides the fundamental principles for traffic control (Caltrans 2012). The principles most applicable to work at the project site are listed below.

- All traffic control devices shall conform to the specifications of the MUTCD (Caltrans 2012).

- The goal of the design of traffic control procedures at construction and maintenance sites is to route traffic through these areas with road layouts and traffic control devices comparable to those for normal roadway situations.

- Disruption of traffic movement will be minimized to the extent practical. Reduced speed zoning will be avoided as much as possible. Frequent and abrupt changes in road layouts, such as lane narrowing, closed lanes, or main roadway transitions that require rapid maneuvers, will be avoided. Provisions will be made for the safe operation of work vehicles, particularly on high-volume roadways. Pedestrians and bicyclists will be provided access and passage through or around the temporary traffic control zone at all times.

- Flaggers will only be employed to control traffic when all other methods of traffic control are inadequate to warn and direct drivers, or when traffic is heavy and interference with normal flow would be minimized.

- Modification of traffic controls or working conditions may be required to promote worker safety. Traffic control zones will be monitored carefully under varying conditions of traffic volumes, ambient light, and weather to ensure that traffic control measures are operating effectively, and that all devices used are clearly visible, clean, and in good repair.

- All traffic control devices will be removed immediately when no longer needed.

- Traffic will be channeled by the use of pavement markings and signing, flexible posts, and other lightweight devices that will yield if hit by vehicles.

Chapter 6F of the MUTCD provides regulations for construction signs (Caltrans 2012). The following list outlines the regulations that are most applicable to the work at Parcel G.

- Warning signs in construction areas will have a black legend on an orange background. The use of standard orange flags or flashing yellow beacons in conjunction with signs is permitted, so long as they do not interfere with a clear view of the sign face.

- Signs will be placed in positions where they will convey their message most effectively; therefore, placement must accommodate highway design and alignment. Signs will be placed so that the driver will have adequate time to respond. As a general rule, signs will be located on the right side of the road.

If traffic control measures are required during hours of darkness, all construction signs used at night will be outfitted with a reflective material that has a smooth, sealed outer surface or is illuminated to show approximately the same shape and color day and night.

Cones or delineators should not be necessary for activities associated with this project. However, if cones are used, the following principles apply.

- Channelizing devices should provide a smooth and gradual transition in moving traffic from one lane to another, onto a bypass or detour, or in reducing the width of the traveled way. They should be constructed so as not to inflict damage to a vehicle that inadvertently strikes them. The channelizing devices will be preceded by a system of warning devices (signs).

- It is necessary to patrol the channelization at regular intervals to ensure that it is functioning properly as a traffic control device. Traffic control devices should be checked on a daily basis.

- Cones (at least 28 inches high) and delineators (at least 36 inches high) will be used as channelizing devices. Portable delineators will be either internally illuminated or reflectorized for use at night.

- The maximum spacing for channelization devices (cones or delineators) will be 25 feet.

Chapter 6E of the MUTCD provides regulations for flagger control (Caltrans 2012). If the trucking operations cause heavy traffic at certain times each day, a flagger will be used to slow and/or stop traffic, and the flagger sign will also be used. Regulations related to flagging are listed below.

- Flaggers will be trained in the proper fundamentals of flagging traffic before being assigned to that duty. Flaggers are used at locations where it is necessary to change traffic controls frequently. The flagger must be clearly visible to approaching traffic for a distance sufficient to permit proper response by the motorist to flagging instructions, and to permit a speed reduction before entering the worksite. The flagger must be protected by the use of warning signs and cones. All flaggers will be required to wear orange vests, jackets, or shirts.

- To Slow or Stop Traffic – The "STOP-SLOW" paddle will be used for flagging operations. The paddle may be either handheld or supported by a staff. The following flagging procedures will be used:

    - To Stop Traffic – The flagger will face traffic and hold the "STOP" paddle in a vertical position at arm's length. For greater emphasis, the free arm may be raised with the palm toward approaching traffic.
    - When It Is Safe for Traffic to Proceed – The flagger will stand parallel to the traffic movement and, with the "SLOW" paddle held in a vertical position, motion traffic ahead with the free arm.
    - Where It Is Desired to Alert or Slow Traffic – The flagger will face traffic and hold the "SLOW" paddle in a vertical position at arm's length. For added emphasis, the flagger may slowly raise and lower the free hand with the palm down.

3.2 Traffic Control

Traffic controls will be used to provide for the efficient completion of work activities in a safe working environment, while minimizing the impact on normal traffic flow. Traffic controls may include, but are not limited to, the following:

- Loading and transporting materials, equipment, waste, or debris during off-peak hours to minimize disruptions to facility traffic.

- Encouraging transportation management strategies, such as car/van pool for construction workers.

- Use of cones, flags, signs, and other measures (Section 3.1) to facilitate loading and unloading of materials and waste, as necessary.

- Limiting vehicle speed to 10 miles per hour at the work site and on unpaved truck haul routes on Navy property.

3.2.1 Placement of Traffic Control Devices

The anticipated traffic control devices include stop signs, speed limit signs, and detour signs. A stop sign will be placed on Navy property at the following locations: Crisp Road where it intersects Spear Avenue, Hussey Street where it intersects Spear Avenue, and Morrell Street where it intersects Spear Avenue. Speed limit signs will be placed along each of the truck haul routes while detour signs will direct traffic in both directions along I Street. The locations of the stop signs, speed limit signs, and detour signs are shown on Figure 1. The placement of these traffic control devices will be reviewed and modified, if necessary, during mobilization.

4. References

California Department of Transportation (Caltrans). 2012. California Manual on Uniform Traffic Control Devices for Streets and Highways. January 13.

ARCADIS

FIGURES

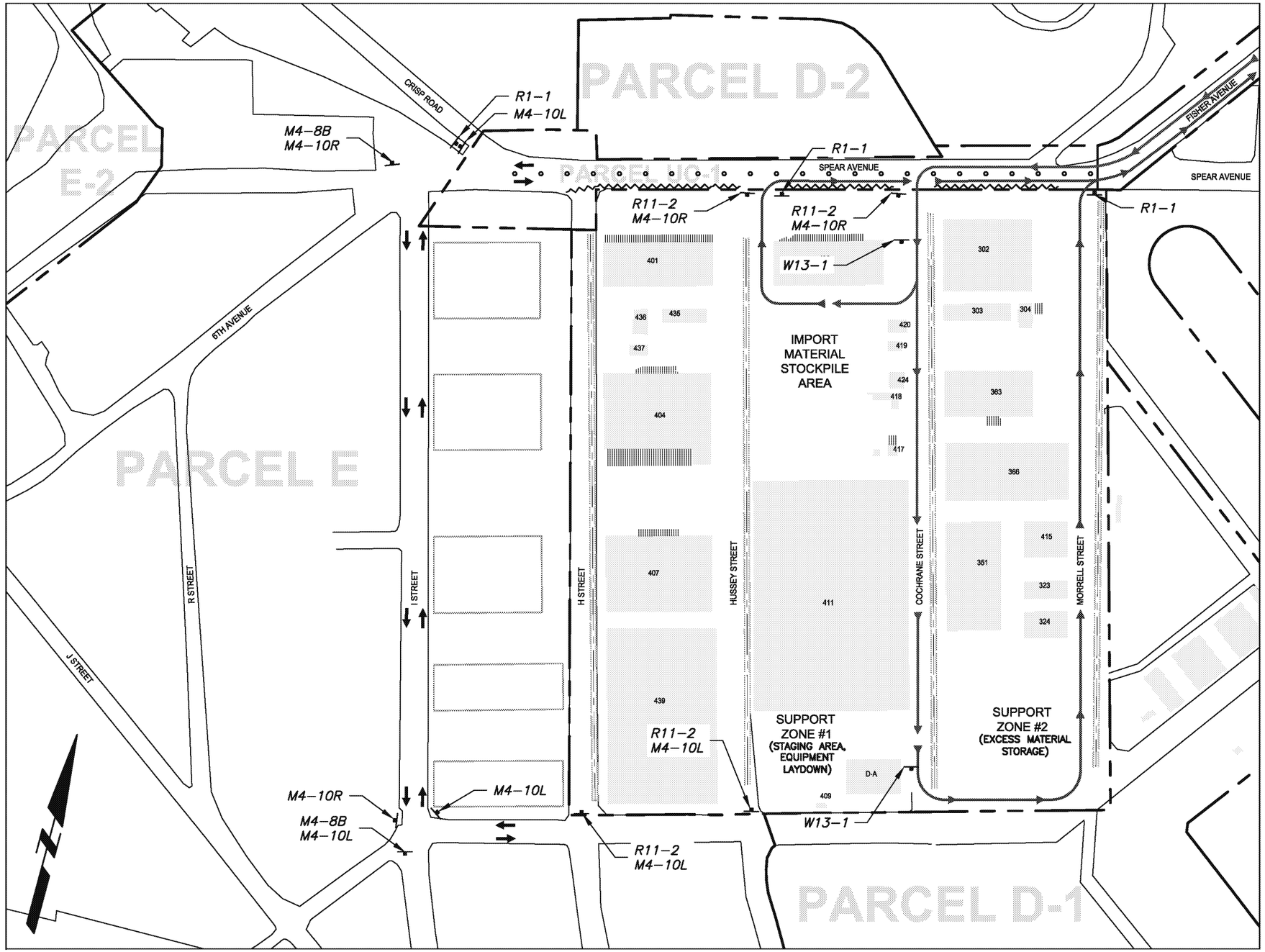

LEGEND

ROAD CLOSED
R11-2

DETOUR
M4-10R

DETOUR
M4-10L

END
M4-8B

STOP
R1-1

10 MPH
W13-1

TEMPORARY TRAFFIC SIGN

DETOUR TRAFFIC FLOW DIRECTION

DELINEATOR PYLONS (POST TUBE DELINEATOR)

PARCEL BOUNDARY

TRUCK ROUTE
INGRESS
EGRESS

K RAIL BARRIER

SIGN CALLOUT
R11-2 — MOUNTED ON TOP
M4-10L — MOUNTED ON BOTTOM

0 250' 500'
GRAPHICAL SCALE

NAVY BASE REALIGNMENT AND CLOSURE PROGRAM
SAN FRANCISCO, CALIFORNIA
TRAFFIC CONTROL PLAN

TEMPORARY TRAFFIC CONTROL PLAN

ARCADIS

FIGURE
1

CITY:(Reqd) DIV/GROUP:(Reqd) DB:(Reqd) LD:(Opt) PIC:(Opt) PM:(Reqd) TM:(Opt) LYR:(Opt)ON=*;OFF=*REF*
H:\PROJECTS\Hunters Point Parcel G\TCP Fig v2.dwg LAYOUT: 1 SAVED: 7/20/2012 4:02 PM ACADVER: 18.1S (LMS TECH) PAGESETUP: ---- PLOTSTYLETABLE: LFR STANDARD.CTB PLOTTED: 7/20/2012 4:05 PM BY: OBERBAUER, PAUL
XREFS: IMAGES: PROJECTNAME: ----
oracle points ChaduxTUV Logo.JPG
ParcelG_Wells_Borings

TRUCK ROUTE
INGRESS
EGRESS

0 1,200' 2,400'
GRAPHICAL SCALE

NAVY BASE REALIGNMENT AND CLOSURE PROGRAM
SAN FRANCISCO, CALIFORNIA
TRAFFIC CONTROL PLAN

IMPORT MATERIAL TRUCK HAUL ROUTE

ARCADIS

FIGURE
2

CITY:(Reqd) DIV/GROUP:(Reqd) DB:(Reqd) LD:(Opt) PIC:(Opt) PM:(Reqd) TM:(Opt) LYR:(Opt)ON=*;OFF=*REF*
G:\Projects\TechStaff\CA0\0077\Design\Figures\TCP Fig v2.dwg LAYOUT: 2 SAVED: 7/24/2012 11:55 AM ACADVER: 18.1S (LMS TECH) PAGESETUP: ---- PLOTSTYLETABLE: LFR STANDARD.CTB PLOTTED: 7/24/2012 11:55 AM BY: OBERBAUER, PAUL
XREFS: IMAGES: PROJECTNAME: ----
oracle points ChanlinTUV Logo.JPG
ParcelG_Weld.jpg HAUL ROUTE.2.jpg
HAUL ROUTE.2.jpg

ARCADIS

APPENDIX D

Environmental Protection Plan
Part 1 – Dust Control Plan

Department of the Navy
Base Realignment and Closure Program
Management Office West

FINAL
Appendix D
Dust Control Plan
for Parcel G, Hunters Point Naval Shipyard, San Francisco, California

December 2012

ARCADIS

Scott Morris, PE
Project Manager

FINAL Appendix D
Dust Control Plan
for Parcel G, Hunters Point
Naval Shipyard, San Francisco,
California

Prepared for:
Department of the Navy
Base Realignment and Closure Program
Management Office West

Prepared by:
ARCADIS U.S., Inc.
9095 Rio San Diego Drive
#240
San Diego
California 92108
Tel 619 291 7800 x21
Fax 619 291 5400

Our Ref.:
CA000776.0002.00002

Date:
December 2012

This document is intended only for the use of the individual or entity for which it was prepared and may contain information that is privileged, confidential and exempt from disclosure under applicable law. Any dissemination, distribution or copying of this document is strictly prohibited.

Acronyms and Abbreviations iv

1. Introduction 1

2. Stationary Air Monitoring 1

3. Real-Time Air Monitoring 3

4. Personal Air Monitoring 5

5. Sampling Procedures 7

5.1 Ambient Air Sampling Tasks 7

5.2 Field Quality Control Samples 8

5.3 Analysis Tasks 9

5.4 Reference Limits and Evaluation Tables 9

5.5 Sampling Design and Rationale and Requirements 10

5.6 Analytical Standard Operating Procedures References 12

5.7 Sample Handling 12

5.8 Laboratory QC Samples 16

5.9 Analytical Services 16

5.10 Data Validation 17

5.11 Usability Assessment 17

5.12 Project Quality Assurance Objectives 19

6. References 22

Tables

1 Threshold Criteria for Analysis of Air Monitoring Data

2 Stationary Air Monitoring Analysis Method and Frequency

3 Personal Air Monitoring Analysis Method and Frequency

4 Ambient Air Sampling Data Quality Objectives

Figures

1 Real-Time Air Monitoring, Parcel G

2 Potential Community Receptors and Buffer Areas

Attachments

A Final Basewide Dust Control Plan

B Field Forms

C Standard Operating Procedures

Acronyms and Abbreviations

ARCADIS	ARCADIS-US, Inc.
BDCP	Basewide Dust Control Plan
COC	chemical of concern
CTL	Curtis and Tompkins Laboratory
DCP	Dust Control Plan
DL	detection limit
DoD	U.S. Department of Defense
DQOs	data quality objectives
EDD	electronic data deliverable
EPA	U.S. Environmental Protection Agency
ft^3/min	cubic feet per minute
HPNS	Hunters Point Naval Shipyard
ICAL	initial calibration
ICP	inductively coupled plasma
ICP-MS	inductively coupled plasma mass spectrometry
ICS	interference check solution
ICV	initial calibration verification
LCS	laboratory control sample
LDC	Laboratory Data Consultants
LOD	limit of detection
LRPM	Lead Remedial Project Manager
LOQ	Limit of Quantification
L/min	liters per minute
mg/kg	milligrams per kilogram
mL	milliliter
MS/MSD	matrix spike/matrix spike duplicate
NAVFAC SW	Naval Facilities Engineering Command Southwest
Navy	Department of the Navy
NIRIS	Naval Installation Restoration Information Solution
PAHs	polycyclic aromatic hydrocarbons
PALs	project action limits
PARCC	precision, accuracy, representativeness, comparability, and completeness
PCBs	polychlorinated biphenyls
PEM	performance evaluation mix
QA	quality assurance
QAM	Quality Assurance Manager
QAO	Quality Assurance Officer
QC	quality control
QL	quantitation limit
QSM	Quality Systems Manual
RA	remedial action
RER	relative error ratio
RL	reporting limit
RODs	Records of Decision

ROICC	Resident Officer in Charge of Construction
RPD	relative percent difference
RRT	relative retention time
RSD	relative standard deviation
SOP	Standard Operating Procedure
SSHO	Site Safety and Health Officer
SVOCs	semivolatile organic compounds
TBD	to be determined
TPH	total petroleum hydrocarbons
TPH-d	total petroleum hydrocarbons as diesel-range organics
TPH-g	total petroleum hydrocarbons as gasoline-range organics
TPH-mo	total petroleum hydrocarbons as motor oil-range organics
UFP-QAPP	Uniform Federal Policy for Quality Assurance Project Plan
VOA	volatile organic analysis
VOCs	volatile organic compounds
µg/kg	micrograms per kilogram

1. Introduction

This Dust Control Plan (DCP) documents the measures that will be implemented to mitigate potential exposure to dust during implementation of the construction of a durable cover on Parcel G at Hunters Point Naval Shipyard (HPNS). This plan will be in effect for all site work described in the Remedial Action Work Plan (RAWP) that produces dust, including that generated during clearing and grubbing, and installation of the durable cover. The objective of this plan is to protect workers and nearby residents from potential exposure to chemicals of concern (COCs) by minimizing dust generated during construction. This plan supplements the Accident Prevention Plan (ARCADIS, 2012), which provides guidance on air monitoring and worker protection.

Work at Parcel G shall be conducted in accordance with the Final Basewide Dust Control Plan (BDCP), included as Attachment A to this plan. The BDCP outlines the dust control measures and monitoring requirements for all work within HPNS. The BDCP requires air monitoring (stationary high-volume sampling and real-time dust monitoring) to be conducted at upwind and downwind monitoring points for the following analytes: total suspended particulates (TSP), lead, manganese, asbestos, and particulate matter less than 10 microns in diameter (PM_{10}). In addition to the analytes prescribed for analysis by the BDCP, arsenic shall also be included in the dust monitoring plan (Navy 2009a and 2009b; ChaduxTt 2010). Dust monitoring locations for stationary and real-time air monitoring are discussed in Sections 2 and 3, respectively.

In addition to stationary high-volume sampling and real-time dust monitoring, personal air monitoring will be performed to assess worker exposure to site COCs. Exposure assessments to be completed as part of this RA are further discussed in the Accident Prevention Plan (ARCADIS 2012). Personal air monitoring is discussed in Section 4.

2. Stationary Air Monitoring

Dust and other airborne contaminants pose a two-fold concern at HPNS. The immediate site concern is for worker safety and health and the second concern is to the nearby community and the public in general. Stationary air monitoring helps ensure that construction activities are not affecting site workers and the surrounding community by generating excess dust. Figure 2 illustrates the areas containing potential community receptors located within 0.25-mile and 1-mile buffer areas, as well as potential sensitive community receptors such as schools.

Stationary air monitoring will be conducted at upwind and downwind locations for Parcel G, so that dust conditions during construction can be compared with ambient conditions. Wind direction will be determined each day using a windsock. Figure 1 illustrates the proposed monitoring locations. The Parcel G upwind monitoring station will be located at the northwest corner of the parcel near the intersection of H Street and Spear Avenue and the downwind monitoring station will be located at the southeastern corner of Parcel G near the intersection of Manseau and Morrell Streets. Adjustments to the monitoring locations will be made by the Site Safety and Health Officer (SSHO) to ensure that upwind and downwind monitoring locations are selected appropriately. Monitoring location adjustments will be based on prevailing wind direction, but may be adjusted based on actual work conditions and local wind direction established from the on-site windsock, which will be present throughout the period of construction.

Stationary monitoring samples for dust and dust-adhering COCs (i.e., arsenic, lead, and manganese) will be collected using a high-volume air sampler at a rate of 39 to 60 cubic feet per minute. Samples shall be collected in accordance with the U.S. Environmental Protection Agency's (USEPA's) reference sampling method for TSP, described in Title 40 Code of Federal Regulations (CFR), Part 50, Subpart B. TSP, arsenic, lead, manganese, asbestos, and PM_{10} shall be monitored at stationary air monitoring locations, using the following methods:

- **TSP, Arsenic, Lead, and Manganese.** Samples of TSP shall be collected with a high-volume (39 to 60 cubic feet per minute) air sampler in accordance with USEPA's reference sampling method for TSP, described in Title 40 CFR, Part 50, Subpart B. Each sample shall be collected on a filter over a 24-hour period, and the filter will be weighed to determine the amount of TSP collected. After the amount of TSP is determined, the sample shall be analyzed for arsenic, lead, and manganese using a modified USEPA Method IO-3.1 (USEPA 1999).

- **Asbestos.** Air samples shall be collected and analyzed for asbestos in accordance with the National Institute of Occupational Safety and Health (NIOSH) Method 7400, in the NIOSH Manual of Analytical Methods (NIOSH 2003). Method 7400 requires that samples be collected on three-piece cellulose ester filters, which are fitted with conductive cowlings, at a sampling rate of between 0.5 liter per minute (L/min) and 16 L/min. Each sample will be collected over an approximately 24-hour period.

- **PM_{10}.** Air samples shall be collected and analyzed for PM_{10} in accordance with USEPA's reference sampling method for PM_{10}, described in Title 40 CFR Part 50, Subpart J. Each sample shall be collected on a filter over an approximately 24-hour period and weighed to evaluate the concentrations of PM_{10} in ambient air.

To ensure compliance with this plan, COC concentrations shall be compared with the threshold concentration levels, which are defined by the California Division of Occupational Safety and Health Administration's (Cal/OSHA's) permissible exposure limits (PELs). Table 1 summarizes threshold concentration levels. Table 2 summarizes the analytical methods and test frequency for air monitoring. If an exceedance of the threshold concentrations is detected, the upwind and downwind results will be compared to determine if the exceedance was caused by on-site activities. If on-site activities are found to be the cause of an exceedance, the SSHO will immediately implement corrective actions to enhance the dust control measures being implemented. Dust control methods are described in Appendix E of the RAWP, Storm Water Pollution Prevention Plan. These include, but are not limited to, applying additional water and/or soil stabilizers, reducing driving speeds on unpaved roads, and modifying the equipment and/or approach used to perform the work activities.

3. Real-Time Air Monitoring

The procedures for conducting real-time air monitoring are described in the Accident Prevention Plan (ARCADIS 2012) and summarized in this section. Real-time air monitoring allows for the measurement of mass concentrations of particulates or dust. Real-time air monitoring shall be conducted in each active work zone, as well as upwind and downwind of Parcel G using a Real-time Aerosol Monitor (RAM). The proposed locations of the RAMs are illustrated on Figure 1. Adjustments to the RAM locations will be made by the Site Safety and Health Officer (SSHO) to ensure that upwind and downwind monitoring locations are selected appropriately. Monitoring location adjustments will be based on prevailing wind direction, but may be adjusted based on actual work conditions and local wind direction established from the on-site windsock, which will be present throughout the period of construction.

The action level for this project has been defined for dust-borne contaminants, measured as total particulates by direct-reading instrumentation, as 0.5 milligrams per cubic meter (mg/m^3), which is the lowest site-specific action level. Action level calculations were based on the following formula, using HPNS ambient levels as the maximum contaminant concentration:

$$AL_{calc} = \left(\frac{PEL}{\left(\frac{Concentration_{MAX}}{10^6}\right) \times (SF)} \right) \times PF$$

Where:

AL_{calc} =	Action level calculated
PEL =	Cal/OSHA permissible exposure limit (in mg/m^3)
$Concentration_{MAX}$ =	Highest soil concentration of contaminant identified in work areas (in milligrams per kilogram)
SF =	Safety factor to account for statistical variations (a factor of 2 will be used for this project)
PF =	Protection factor for the respiratory equipment worn

United States Environmental Protection Agency, 1999.

While concentrations of specific analytes are not measured by a RAM monitor, knowing the total concentration of particulates allows workers to quantify the success of the dust control measures that are in place. If the mass concentration of particulates is less than the action level defined for this project, then the dust control measures in place are adequate. When the mass concentration of particulates is high, meeting or exceeding the action level defined for this project, the SSHO will immediately implement corrective actions to enhance the dust control measures being implemented. The following engineering controls will be implemented to reduce airborne dust:

- Stopping work to allow the dust to dissipate
- Applying additional water or soil stabilizers for dust suppression
- Modifying the approach to the work activities
- Upgrading level of protection to Level C

Dust control methods are described in Appendix E of the RAWP, Storm Water Pollution Prevention Plan. Engineering controls, such as selection of personal protective equipment, are described in the Accident Prevention Plan (ARCADIS 2012). If the level of protection is upgraded to Level C, only the Project Manager or the Health and Safety Manager can make a subsequent downgrade decision.

A minimum of three dust meters will be in use at the site during all dust-producing activities. One will be placed upwind of activity, one downwind, and one in the work zone. The work zone dust monitor will be placed adjacent to the most active work area. If work is being conducted in multiple locations, additional dust meters may be placed in each active work zone. Figure 1 illustrates the proposed monitoring locations and windsock location. The Parcel G monitoring locations are provided in Section 2 and were based on prevailing wind direction. The proposed locations may be adjusted daily based on actual work conditions. Adjustments to the monitoring locations will be made by the SSHO to ensure that upwind and downwind monitoring locations are selected appropriately. The RAM dust meter will log continuously airborne dust concentrations. Continuous data will be downloaded and reviewed at the end of each workday. Direct readings will be collected from each RAM on an hourly basis and recorded on the Dust Monitoring Log Sheet in Attachment B. Instantaneous readings, as well as the time-weighted average for the day to that point, will be recorded.

4. Personal Air Monitoring

The procedures for conducting personal air monitoring are described in the Accident Prevention Plan and summarized in this section (ARCADIS 2012). Personal air monitoring and sampling will be conducted for one worker conducting each type of work. Samples will be collected throughout the workday (8 hours) and will be analyzed for dust-adhering COCs within 24 hours. Personal air monitoring will be conducted at the beginning of the clearing and grubbing operation and the beginning of the paving portion of the project. Personal air monitoring shall continue until COCs and other chemical hazards are less than action levels for a minimum of 1 day of work (8 hours). Personal air monitoring will be completed to assess worker exposure to site COCs. Exposure assessments to be completed as part of this RA are further discussed in the Accident Prevention Plan (ARCADIS 2012).

Personal air monitoring will be conducted at the beginning of the clearing and grubbing operations and the beginning of the paving portion of the project. A personal air sampling pump will be placed on one worker conducting each type of task. The importance of workplace monitoring for contaminants will be explained to each individual wearing the personal air sampling pump. It shall be explained to the individual how the pump operates, as well as when and where the sampling equipment will be removed. Samples will be collected during the workday and analyzed for total dust and dust-adhering COCs within 24 hours. Sampling will continue for each unique task until results are consistently found to be less than the site action level. Prior to the receipt of personal air monitoring results, personnel working on tasks that may pose a

risk of exposure will wear personal protective equipment sufficient to protect from potential exposure (see the Accident Prevention Plan [ARCADIS 2012]).

Personal air monitors shall be calibrated before each use, and the exact flow rate and start time will be recorded on a calibration log (Attachment B). The personal air pump shall be worn on the shirt collar or near the nose or mouth of the individual in a manner in which work performance and safety of the employee is not affected. The inlet of the pump shall be oriented in a downward position to avoid gross contamination by airborne debris. Following each day of work, pump flow rate and stop time will be recorded on a calibration log.

Samples will be collected throughout the workday (8 hours) and will be analyzed for dust-adhering COCs within 24 hours. Arsenic, lead, manganese, and asbestos shall be monitored during personal air monitoring using the following methods:

- **Arsenic, Lead, and Manganese.** Personal air monitoring for dust-adhering COCs will be conducted using personal air pumps with filter cartridges. Cartridges will be analyzed on a rush turnaround and in accordance with the NIOSH Method 7300 for elements by inductively coupled plasma spectrometry, including arsenic, lead, and manganese. Pumps will be calibrated to a flow rate of 1 to 4 L/min.

- **Asbestos.** Personal air monitoring for asbestos will be conducted following OSHA ID 160 sampling procedures using a personal air pump with mixed cellulose ester cassettes suitable for asbestos (e.g., chrysotile, tremolite, anthophyllite, actinolite, and amosite) analysis. Cartridges will be analyzed on a rush turnaround and in accordance with NIOSH Method 7400 for asbestos and other fibers by phase contrast light microscopy (NIOSH 2003). Pumps will be calibrated to a flow rate of 0.5 to 16 L/min.

Table 3 summarizes the analytical methods and test frequency for air monitoring.

Personal Air Monitoring Samples

- The sample will be analyzed for lead, arsenic, and manganese in accordance with NIOSH Method 7300 for elements by inductively coupled plasma spectrometry.
- Asbestos analyses will be conducted in accordance with NIOSH Method 7400 by phase contrast light microscopy (NIOSH, 2003).

Personal air monitoring results will be compared to the site action level and regulatory threshold limits, as presented in Table 1, for use in initial exposure assessments for site COCs and other potential chemical hazards. Personal air monitoring and associated sampling will continue for each unique task until the detected concentrations of COCs throughout one workday (8 hours) are less than the action levels and regulatory threshold limits.

Appropriate personal protective equipment will be worn by all site workers until it can be demonstrated that the exposure risk allows for a reduction in the level of protection. Engineering controls, such as dust suppression, may be prescribed by the SSHO to achieve the site action levels and regulatory threshold limits. Only the Project Manager or the Health and Safety Manager can make a protective equipment downgrade decision.

5. Sampling Procedures

5.1 Ambient Air Sampling Tasks

Perimeter dust monitoring stations will be set up during mobilization and will be operated throughout the entire period of construction. Direct readings from each dust monitoring station will be recorded on an hourly basis using the procedures described in Section 3. Stationary high-volume sampling will include upwind and downwind monitoring for TSP, manganese, lead, asbestos, and PM_{10}. Sample procedures are detailed in the BDCP and DCP and are summarized as follows.

- TSP will be sampled with a high-volume (39 cubic feet per minute [39 ft^3/min] to 60 ft^3/min) air sampler in accordance with EPA's reference sampling method for TSP, described in Title 40 *Code of Federal Regulations* (CFR), Part 50, Subpart B. Each sample will be collected on a filter over the course of a period not to exceed 54 hours. The flow of the high-volume air sampler will be property calibrated to establish traceability of the field measurement, and calibrations shall follow guidelines specified in 40 CFR, Part 50, Section 9.3 and Section 2.6 of *EPA Quality Assurance Handbook for Air Pollution Measurement Systems, Volume II: Ambient Air Specific Methods* (EPA, 1998).
- Arsenic, lead, and manganese analyses will be conducted in accordance with IO-3.1, as identified in EPA's Compendium of Methods for the Determination of Inorganic Compounds in Ambient Air (EPA, 1999).
- Asbestos will be sampled in accordance with the National Institute for Occupational Safety and Health (NIOSH) Method 7400 from the NIOSH Manual of Analytical Methods (NIOSH, 1994). The samples will be collected

on three-piece cellulose ester filters fitted with conductive cowlings at a sampling rate between 0.5 liters per minute (L/min) and 16 L/min. Each sample will be collected over a period not to exceed 54 hours.

- PM_{10} will be sampled in accordance with EPA's reference sampling method, described in 40 CFR 50, Subpart J. Each sample will be collected on a filter over a period not to exceed 54 hours.

Personal air monitoring will be conducted at the beginning of the clearing and grubbing task and at the beginning of the paving task. Personal air monitoring and sampling will be conducted for one worker conducting each of these tasks. Sample procedures are detailed in the BDCP and DCP and are summarized as follows.

- A personal air pump will be placed on one worker for each specified task requiring personnel air monitoring in the DCP.
- Arsenic, lead, and manganese sampling will be conducted using personal air pumps with filter cartridges. The pumps will be calibrated to a flow rate of 1 to 4 liters per minute (L/min). Cartridges will be analyzed on a rush turnaround and in accordance with the NIOSH Method 7300 for elements by inductively coupled plasma spectrometry.
- Asbestos will be collected following OSHA ID 160 sampling procedures suing a personal air pump with mixed cellulose ester cassettes suitable for asbestos analysis. Pumps will be calibrated to a flow rate of 0.5 to 16 L/min. Cartridges will be analyzed on a rush turnaround and in accordance with NIOSH Method 7400 for asbestos and other fibers by phase contrast light microscopy.
- Samples will be collected throughout the 8-hour workday and will be analyzed within 24 hours.
- Sampling will continue for each specified task until results are consistently found to be less than the site action level established in the DCP.

5.2 Field Quality Control Samples

Measurement Performance Criteria Table – Field QC Samples

QC Sample[1]	Analytical Group	Frequency	Data Quality Indicators	Measurement Performance Criteria
Field Blanks	Metals TSP PM_{10} Asbestos	One per 10 samples	Accuracy	No analyte > LOQ

5.3 Analysis Tasks

CTL will analyze the ambient air samples for TSP, arsenic, manganese, lead, asbestos, and PM_{10} as required by the BDCP and DCP. Ambient air samples will be analyzed by CLT as follows:

Perimeter Dust Monitoring Samples

- The amount of TSP collected will be determined by weighing the filter collected for the TSP sample.
- Once TSP is determined, the sample will be analyzed for arsenic, lead, and manganese in accordance with IO-3.1, as identified in EPA's Compendium of Methods for the Determination of Inorganic Compounds in Ambient Air (EPA, 1999).
- The amount of PM_{10} collected will be determined by weighing the filter collected for the PM_{10} sample. Asbestos analyses will be conducted in accordance with the National Institute for Occupational Safety and Health (NIOSH) Method 7400 from the NIOSH Manual of Analytical Methods (NIOSH, 1994).

Personal Air Monitoring Samples

- The sample will be analyzed for lead, arsenic, and manganese in accordance with NIOSH Method 7300 for elements by inductively coupled plasma spectrometry.
- Asbestos analyses will be conducted in accordance with NIOSH Method 7400 by phase contrast light microscopy (NIOSH, 2003).

5.4 Reference Limits and Evaluation Tables

Matrix: Air (Perimeter Dust Monitoring Air Monitoring)

Analytical Group: TSP, Arsenic, Manganese, Lead, PM_{10}, Asbestos

Analyte	CAS No.	PAL	PAL Reference	Project QL Goal	Laboratory-Specific Limits	
					Reporting Limit (RL)	Method Detection Limit (MDL)
TSP	--	0.5 mg/m^3	BDCP[1]	0.5 mg/m^3	8mg/sample	Not Applicable
Arsenic	7440-38-2	10 µg/m^3	Cal/OSHA[2]	10 µg/m^3	0.75µg/filter[3]	0.145µg/filter[3]
Manganese	7439-96-5	200 µg/m^3	Cal/OSHA[2]	200 µg/m^3	8 µg/filter[3]	1.6 µg/filter[3]
Lead	7439-92-1	50 µg/m^3	Cal/OSHA[2]	50 µg/m^3	1.35µg/filter[3]	0.265µg/filter[3]

PM_{10}	--	5 mg/m^3	Cal/OSHA[2]	5 mg/m^3	8mg/sample	Not Applicable
Asbestos	--	0.1 asbestos fiber/cc	Cal/OSHA[2]	0.1 f/cc	Not Applicable	0.1%

Notes:

1. Level chosen to minimize overall permissible dust release from site per the Final Basewide Dust Control Plan
2. "California Occupational Safety and Health Administration [Cal/OSHA] permissible exposure limit (PELS)" Cal/OSHA.
3. Based on a 1,000L sample volume and 50mL final analysis volume

Matrix: Air (Personal Air Monitoring)

Analytical Group: Arsenic, Manganese, Lead, Asbestos

Analyte	CAS No.	PAL	PAL Reference	Project QL Goal	Laboratory-Specific Limits	
					Reporting Limit (RL)	Method Detection Limit (MDL)
Arsenic	7440-38-2	16 ng/m^3	DCP[1]	16 ng/m^3	Not Applicable	0.1%
Manganese	7439-96-5	16 ng/m^3	DCP[1]	16 ng/m^3	8 µg/filter[2]	1.6 µg/filter[2]
Lead	7439-92-1	16 ng/m^3	DCP[1]	16 ng/m^3	1.35µg/filter[2]	0.265µg/filter[2]
Asbestos	--	0.003 fibers/cm^3	DCP[1]	0.003 fibers/cm^3	Not Applicable	0.1%

1. Level chosen to minimize overall permissible dust release from site per the Final Basewide Dust Control Plan
2. Based on a 1,000L sample volume and 50mL final analysis volume

5.5 Sampling Design and Rationale and Requirements

Sampling procedures are described in *Basewide Dust Control Plan, Revision 1*, dated November 29, 2010. The frequency of sampling for will be dictated by Table 5-1 of the BDCP. The air samples will be analyzed for TSP, manganese, lead, asbestos, and PM_{10}. Sample results will be screened against site-specific PALs, which are provided in Section 5.4.

Matrix	Analytical Group	Analytical and Preparation Method/SOP Reference[1,3]	Containers (number, size, and type)	Sample Volume (unit)	Preservation Requirements (chemical, temperature, light-protected)	Maximum Holding Time (preparation/ analysis)
Air (Perimeter Dust	TSP	40 CFR, Part 50, Subpart B/	Lab Supplied Pre-weighed Filter	NA	NA	NA

Matrix	Analytical Group	Analytical and Preparation Method/SOP Reference[1,3]	Containers (number, size, and type)	Sample Volume (unit)	Preservation Requirements (chemical, temperature, light-protected)	Maximum Holding Time (preparation/ analysis)
Monitoring)		Lab SOP Pending				
Air (Perimeter Air Monitoring)	Lead, Manganese, Arsenic	EPA IO-3.1/ Lab SOP Pending	Lab Supplied Pre-weighed Filter	NA	NA	180 days
Air (Perimeter Dust Monitoring)	Particulate Matter < 10 microns (PM_{10})	40 CFR, Part 50, Subpart J/ Lab SOP Pending	Lab Supplied Pre-weighed Filter	NA	NA	NA
Air (Perimeter Dust Monitoring)	Asbestos	NIOSH 7400/ Lab SOP Pending	(0.45- to 1.2-µm cellulose ester membrane filter, 25-mm; conductive cowl on cassette	NA	NA	NA
Air (Personal Air Monitoring)	Lead, Manganese, Arsenic	NIOSH Method 7300/ Lab SOP Pending	TBD	NA	NA	NA
Air (Personal Air Monitoring)	Asbestos	NIOSH Method 7400/ Lab SOP Pending	TBD	NA	NA	NA

Field Equipment Calibration, Maintenance, Testing, and Inspection

Field Equipment	Activity	Frequency	Acceptance Criteria	Corrective Action	Responsible Person	SOP Reference	Comments
Personal Air Sampler	Calibrate pump; record exact flow rate at start and at stop	Daily, at the start and stop times of usage.	Flow rate must be to 1-4 L/min for arsenic, lead, and manganese sampling. Flow rate must be 0.5-16 L/min for asbestos sampling.	Replace air sampler	Field Personnel	Equipment Manual	None

5.6 Analytical Standard Operating Procedures References

Laboratory SOP Number[1]	Title, Revision Date, and/or Number	Definitive or Screening Data	Matrix and Analytical Group	Instrument	Organization Performing Analysis	Variance to QSM	Modified for Project Work? (Y/N)
Lab SOP Pending	TSP Analysis (Perimeter Dust Monitoring)	Definitive	Total Suspended Particulates in Air (Perimeter Dust Monitoring)	Balance	ALS Environmental	None	No
SOP No. RL-MT-003, Rev. 3	Manganese and Lead in TSP Analysis (Perimeter Dust Monitoring)	Definitive	Manganese and Lead in Air (Perimeter Dust Monitoring)	ICP-AES	TestAmerica	None	No
Lab SOP Pending	PM_{10} Analysis (Perimeter Dust Monitoring)	Definitive	Particulates less than 10 microns in Air (Perimeter Dust Monitoring)	Balance	ALS Environmental	None	No
SOP No. RL-ASB-001, Rev. 5	Asbestos Analysis (Perimeter Dust Monitoring)	Definitive	Asbestos in Air (Perimeter Dust Monitoring)	Microscope	TestAmerica	None	No
SOP No. RL-MT-003, Rev. 3	Arsenic, Manganese, and Lead (Personal Air Monitoring)	Definitive	Arsenic, Manganese, and Lead in Air (Personal Air Monitoring)	ICP-AES	TestAmerica	None	No
SOP No. RL-ASB-001, Rev. 5	Asbestos (Personal Air Monitoring)	Definitive	Asbestos in Air (Personal Air Monitoring)	Microscope	TestAmerica	None	No

1. SOPs are included in Attachment C.

5.7 Sample Handling

Sample Identification

Air sample numbers for samples collected from perimeter dust stations will be in the form of "PCG-DSXX-YY," where:

- "PCG" = Parcel G
- "DS"= Dust Station
- "XX" = perimeter dust station identifier (e.g., DS01 = perimeter dust station 1)
- "ZZ" = sample collection sequence number (e.g., 01 = sample number 1)

For example, identification number PCG-DS01-01 would represent Parcel G perimeter dust station number 1, sample number 1.

Air sample numbers for samples collected from personal air monitors will be in the form of "PCG-PMXX-YY," where:

- "PCG" = Parcel G
- "PM"= Personal Air Monitor
- "XX" = personal air monitor identifier (e.g., PM01 = personal air monitor 1)
- "ZZ" = sample collection sequence number (e.g., 01 = sample number 1)

For example, identification number PCG-PM01-01 would represent Parcel G personal air monitor number 1, sample number 1.

The sample numbers will be recorded in the field logbook, on the sample label, and on the chain-of-custody record at the time of sample collection. A complete description of the sample and sampling conditions will be recorded in the field logbook and referenced using the unique sample identification numbers.

Sample Labeling

Correct sample labeling and the corresponding notation of the sample identification numbers in the field notebook and on the COC forms will be utilized to prevent misidentification of samples, and their eventual results. All sample labels will be completed legibly with indelible ink. The labels will be affixed to the sample container at the time of sample collection. The sample labels will include the following, at a minimum:

- Project name,
- Company name,
- Name/initials of the collector,
- Date and time of collection,
- Sample location and depth,
- Analysis required, and
- Preservatives added.

A copy of a sample label is included in Attachment 4.

Chain of Custody

ARCADIS will use standard sample custody procedures to maintain and document sample integrity during collection, transportation, storage, and analysis. A sample will be considered to be in custody if one of the following statements applies:

- It is in a person's physical possession or view.
- It is in a secure area with restricted access.
- It is placed in a container and secured with an official seal such that the sample cannot be reached without breaking the seal.

COC procedures are used to document and track samples from collection through reporting of analytical results and to serve as permanent records of sample handling and shipment. Strict COC protocol will be maintained for all samples collected during this project. The COC forms will be filled out with indelible ink by the Construction Manager, and any mistakes made will be crossed out with a single line and initialed and dated. COC forms will be completed for every cooler and will be sealed in a resealable bag and taped to the inside of the lid of the cooler. COC forms will include the following information:

- Project name and number,
- Project contact information (both ARCADIS and laboratory),
- Sampling location,
- Name and signature of sampler,
- Destination of samples (laboratory name),
- Unique sample identification number,
- Matrix type,
- Date and time of collection,
- Number and type of containers filled,
- Analysis requested,
- Preservatives used (if applicable),
- Filtering (if applicable),
- Sample designation (grab or composite),
- Sampler's signature,
- "Relinquished By"- information (signature, company, date/time),
- "Received By"- information (signature, company, date/time),

- Airbill number (if applicable), and
- Remarks.

Unused lines on the COC record will be crossed out. COC records that are initiated in the field will be signed by field personnel. The COC will be placed in a waterproof plastic bag and taped to the inside of the shipping container. Signed airbills will serve as evidence of custody transfer between field personnel and the courier, and between the courier and the laboratory. Copies of the COC record and the airbill will be retained and filed by field personnel before the containers are shipped. A copy of a sample COC form is included in Attachment 4.

The laboratory will provide a secure storage area for all samples. Access to this area will be restricted to authorized personnel. The custodian will ensure that samples requiring special handling, including samples that are heat- or light-sensitive, radioactive, or have other unusual physical characteristics, will be properly stored and maintained prior to analysis.

Sample Packaging and Shipment

Sample containers will be placed in a resealable plastic bag to protect the sample from moisture and to prevent breakage and potential cross-contamination during transportation to the laboratory.

Air samples will be packaged to prevent breakage and cross contamination. The samples may be shipped in a box rather than a cooler with sufficient packaging material to prevent breakage. Place chain of custody inside with shipping box with the samples. Air samples should NOT be shipped on ice. Custody seals should be placed on the outside of the box across seams.

5.8 Laboratory QC Samples

Matrix Air

Analytical Group TSP & PM10

Analytical Method/SOP Reference[1] 40 CFR, Part 50, Subpart B & 40 CFR, Part 50, Subpart J /CTL SOP Pending

QC Sample	Frequency and Number	Method/SOP QC Acceptance Limits	Corrective Action	Person(s) Responsible for Corrective Action	Data Quality Indicator	Measurement Performance Criteria
Method blank	One per batch	No measureable particulates detected >RL in accordance with DoD QSM requirements.	Re-stabilize in humidity controlled room and reanalyze the method blank and all samples processed with the contaminated blank in accordance with DoD QSM requirements	Laboratory Manager/Analyst	Accuracy/Bias Contamination	No target analytes ≥ RL in accordance with DoD QSM requirements
LCS (Check Weights)	Two check weights (LCS) per each batch	QC acceptance criteria as specified by DoD; or laboratory statistically derived control limits in accordance with DoD QSM requirements	Follow manufacturer's instructions for recalibrating balance. Reanalyze the LCS and all samples in the associated batch for failed analytes.	Laboratory Manager/Analyst	Precision and Accuracy/Bias	QC acceptance criteria: as specified by DoD; or laboratory statistically derived control limits
Lab Replicate	One Lab Replicate pair per batch	QC acceptance criteria as specified by DoD; or laboratory statistically derived control limits in accordance with DoD QSM requirements	Examine the project-specific DQOs. Evaluate the data, and reanalyze the sample.	Laboratory Manager/Analyst	Precision and Accuracy/Bias	QC acceptance criteria: as specified by DoD (RPD ≤ 20); or laboratory statistically derived control limits

5.9 Analytical Services

Matrix	Analytical Group	Analytical SOP[1]	Data Package Turnaround Time	Laboratory/Organization (name and address, contact person, and telephone number)	Backup Laboratory/ Organization (name and address, contact person, and telephone number)
Air	TSP and PM10	Lab SOP Pending	15 business days	ALS Environmental 960 West LeVoy Drive Salt Lake City, UT 84123 Point of Contact: Paul Pope (801) 266-7700 ext 381	TBD
Air	Metals	SOP No. RL-MT-003, Rev. 3	15 business days	TestAmerica 13715 Rider Trail North St. Louis, MO 63045	TBD

Matrix	Analytical Group	Analytical SOP[1]	Data Package Turnaround Time	Laboratory/Organization (name and address, contact person, and telephone number)	Backup Laboratory/ Organization (name and address, contact person, and telephone number)
				Point of Contact: Mike Franks (314) 298-8566	
Air	Asbestos	SOP No. RL-ASB-001, Rev. 5	15 business days	TestAmerica 13715 Rider Trail North St. Louis, MO 63045 Point of Contact: Mike Franks (314) 298-8566	TBD

1. SOPs are included in Attachment C.

5.10 Data Validation

An independent third-party company will be contracted to review and validate the analytical data associated with this field work. Twenty percent of the sample data will be randomly selected by the data validator and will be subjected to an EPA Level IV validation. The remaining 80% of the data will undergo EPA Level III validation. The 20% portion of the data set should be comprised of routine field samples. The validator will perform calculation checks for these data and the data for the associated QC samples. The chemical data will be validated per the requirements in the Department of Defense Quality Systems Manual for Environmental Laboratories, Version 4.2 (2003) acceptance criteria and will be qualified per USEPA National Functional Guidelines for Inorganic Data Review (2004), USEPA National Functional Guidelines for Organic Data Review (1999), and NAVFAC SW Environmental Work Instruction (EWI) 3EN21 (2001).

5.11 Usability Assessment

To the extent possible, ARCADIS will follow USEPA's data quality assessment (DQA) process to verify that the type, quality, and quantity of data collected are appropriate for their intended use. DQA methods and procedures are outlined in two USEPA guidance documents: *Data Quality Assessment Statistical Tools for Practitioners* (USEPA, 2006b) and *Data Quality Assessment, A Reviewer's Guide* (USEPA, 2006c). The DQA process consists of five steps: (1) review the DQOs and sampling design; (2) conduct a preliminary data review; (3) select a statistical test; (4) verify the assumptions of the statistical test; and (5) draw conclusions from the data. When the five-step DQA process is not completely followed by ARCADIS, the DQOs are

qualitative in nature; the contractor will systematically assess data quality and data usability. The following outlines and describes components of the assessment.

Sample design and sampling methods will be reviewed to verify the methods were implemented as planned and are adequate to support project objectives.

- A review of project-specific data quality indicators for Precision, Accuracy, Representativeness, Completeness, Comparability, and Sensitivity and QLs will be conducted to determine if acceptance criteria have been met.
- Project-specific DQOs will be reviewed to determine if they have been achieved by the data collected.
- Limitations associated with the decisions to be made will be evaluated based on the data collected. For example, if data completeness is only 90 percent compared to a project specific completeness objective of 95 percent, the data may still be usable to support a decision, but at a lower level of confidence.
- A Data Validation Report will be prepared and will include a summary of the data validation findings for the project. The report will discuss potential impacts of these reviews on data usability and will clearly define limitations associated with the data.
- The usability assessment process and procedures will be summarized. The summary will include interim steps and statistics, equations, and computer algorithms used during the assessment.
- To evaluative the procedures used to assess overall measurement error associated with the project, measurement error related to GPS data will be determined based on the post-processed data. Measurement error will be included with the tabulated data.
- The ARCADIS PM, QAM, and their designees will be responsible for performing the usability assessment. Analytical data validation will be performed by a third party independent subcontractor.
- Data points for ambient air sample locations will be mapped. The tabulated data and maps will be included in the Technical Memorandum. A Data Validation Summary discussing the usability assessment results will also be included as an appendix to the Remedial Action Completion Report. Analytical data will be validated to determine usability as compared to the data quality objectives. Results from the data validation will be included in the Remedial Action Completion Report, and results will be qualified as necessary to

accurately represent the results. The data quality assessment report will include an evaluation of trends or biases observed in the data.

In the event that the laboratory analytical data is limited in use based on usability review and data validation, any limitation will be taken into consideration when comparing results to the installation background levels and regulatory limits. Data qualifier flags are used by the laboratory and during data validation to notify the user of any possible uncertainty. The most widely used data qualifiers are:

J The analyte was positively identified; however, the result should be considered an estimated value.

UJ The analyte was not detected above the reporting limit; however, the reporting limit is considered an estimated value.

R QC parameters indicate the data is not usable.

Data with the data qualifier flag "R" will not be used in analysis of analytical data. Data with limitations such as "J" and "UJ" may be used, but the potential uncertainty in the results will be noted in the data tables for the Technical Memorandum. Analytical data, to include data qualifier flags, will be uploaded to the NIRIS database using the NEDD format.

The QAM or his designee will be responsible for reviewing and approving the report prepared by the Third Party Validator summarizing the results of the analytical data validation, any corrective actions associated with analytical issues encountered during the project potentially impacting data quality, as well as the analyses of the data performed during the data usability assessments for this project. The QAM may request that the PM re-assemble the project team to further address unresolved QA issues identified during the review of the data usability assessment process.

5.12 Project Quality Assurance Objectives

Analytical results will be evaluated in accordance with the precision, accuracy, representativeness, completeness, comparability, and sensitivity (PARCCS) parameters to ensure the project DQOs are met in conjunction with the *Quality Systems Manual for Environmental Laboratories* (DoD, 2009). Precision and accuracy will be quantitatively evaluated by collecting the field quality control (QC) samples listed

in Section 5.2 and the laboratory QC samples listed in Section 5.8. The following subsections detail the objectives of each parameter.

Precision

Precision is a measure of the reproducibility among a set of replicate results or the agreement among repeat observations made under the same conditions. Analytical precision is the measurement of the variability associated with duplicate or replicate analyses. Total precision is the measurement of the variability associated with the entire sampling and analysis process. It is determined by analysis of duplicate samples and measures variability introduced by both the laboratory and field operations. Matrix duplicate spiked samples will be analyzed to assess field and analytical precision. The precision measurement is determined using the relative percent difference (RPD) between the duplicate sample results. The RPD is calculated according to the following formula:

$$RPD = \frac{(V1-V2) \times 100}{(V1 + V2)/2}$$

Where: V1 = first duplicate concentration
V2 = second duplicate concentration

For this project, the parameters evaluated to assess precision are MS/MSD samples. Goals for sample collection and analysis are set at one MS/MSD sample per every 20 project samples per matrix, as listed in Section 5.8. Section 5.8 also presents precision goals for sampling and analytical activities based on percent RPD for MS/MSDs.

Accuracy

Accuracy is the degree of agreement between an analytical measurement and a reference accepted as a true value. A program of sample spiking will be conducted to evaluate laboratory accuracy. This program consists of the MS and MSD samples, LCS or blank spikes, and surrogate standards. The results of the spiked samples are used to calculate the percent recovery for evaluating accuracy according to the following formula:

$$\% \text{ Recovery} = \frac{(S-C) \times 100}{T}$$

Where: S = Measured spike sample concentration
C = Sample concentration
T = True or actual concentration of the spike

MS/MSD and LCS samples will be prepared and analyzed per analytical batch, where an analytical batch is defined as a group of up to 20 samples of the same matrix that are prepared/analyzed together. Surrogate standards are added to every sample analyzed for organic constituents. Section 5.8 presents accuracy goals for laboratory activities based on the percent recovery of MS, laboratory control, and surrogate spike samples. Results that fall outside the accuracy goals will be further evaluated on the basis of other QC data.

Representativeness

Representativeness expresses the degree to which sample data accurately and precisely represents the characteristics of a population, variations in a parameter at a sampling point, or an environmental condition that it is intended to represent. For this project, representative data will be obtained through careful selection of sampling locations and analytical parameters. Representative data will also be obtained through proper collection and handling of samples to avoid interference and minimize contamination. Representativeness of data will also be ensured through established field and laboratory procedures and their consistent application. To aid in evaluating the representativeness of the sample results, method blank samples will be evaluated for the presence of contaminants. Data determined to be non-representative, by comparison with existing data, will be used only if accompanied by appropriate qualifiers and limits of uncertainty.

Completeness

Completeness is a measure of the amount of valid data obtained compared to the amount expected under ideal conditions. Completeness is evaluated qualitatively and quantitatively. The qualitative evaluation is determined as a function of all events contributing to the sampling event. This includes samples arriving at the laboratory intact, properly preserved, and in sufficient quantity to perform the requested analyses. The quantitative description of completeness is defined as the percentage of QC parameters that are acceptable. QC parameters assessed for quantitative determinations of completeness include surrogate percent recoveries, MS/MSD percent recoveries and RPDs, LCS percent recoveries, field sample and duplicate

RPDs, and holding times. Completeness is calculated and reported for each method, matrix and analyte combination. Following the completion of the analytical testing, the percent completeness will be calculated by the following equation:

% Completeness = (# of usable data/number of samples collected for each parameter analyzed) X 100

Comparability

Comparability is a qualitative parameter that expresses the confidence with which one data set can be compared to another. This is a concern when current data is being integrated with historical or future data. Comparability of data is maximized through the use of standard operating procedures in the field and the laboratory, standardized analytical methods, and consistent units of measure.

Sensitivity

Sensitivity describes the relationship between the laboratory quantitation limits and the project DQOs. Analytes and their associated quantitation limits for each COC are presented in Section 5.4. The purpose of this comparison is to show that the selected analytical methods and associated quantitation limits are capable of quantifying MC at or below the selected project screening levels.

6. References

ARCADIS. 2012. Draft Accident Prevention Plan for the Remedial Action at Parcel G, Hunters Point Shipyard, San Francisco, California. September.

ChaduxTt. 2010. Final Remedial Design Package, Parcel G, Hunters Point Shipyard, San Francisco, California. October.

U.S. Department of Defense, 2010. "Quality Systems Manual for Environmental Laboratories, Version 4.2." October. Available Online at: <http://www.navylabs.navy.mil/QSM%20V4.2%20-%20Final%20102510.pdf>.

Department of the Navy (Navy). 2009a. Record of Decision for Parcels D-1 and UC-1, Hunters Point Shipyard, San Francisco, California. July.

Navy. 2009b. Record of Decision for Parcels UC-2, Hunters Point Shipyard, San Francisco, California. October.

National Institute of Occupational Safety and Health (NIOSH). 2003. NIOSH Manual of Analytical Methods. Available online at: <http://www.cdc.gov/niosh/docs/2003-154>.

Naval Facilities Environmental Facilities Command Southwest. 2001. Environmental Work Instruction (EWI) 3EN21.

U.S. Environmental Protection Agency (USEPA). 1999. Compendium of Methods for the Determination of Inorganic Compounds in Ambient Air. EPA/625/R-96/010a. Office of Research and Development. Washington, DC. June. Available Online at: <http://www.epa.gov/nrmrl/pubs/625r96010/iocompen.pdf>.

USEPA. 1999. Method IO-3.1 – Compendium of Methods for the Determination of Inorganic Compounds in Ambient Air. Available Online at: <http://www.epa.gov/ttnamti1/files/ambient/inorganic/mthd-3-1.pdf>

U.S. Environmental Protection Agency. 2004. National Functional Guidelines for Inorganic Data Review. OSWER 9240.1-45. EPA 540-R-04-004. October.

USEPA, 2006a. "Data Quality Assessment: A Reviewer's Guide, EPA QA/G-9R." Office of Environmental Information. Washington, DC. EPA/240/B-06/002. February. Available Online at: <http://www.epa.gov/QUALITY/qs-docs/g9r-final.pdf>.

USEPA, 2006b. "Data Quality Assessment: Statistical Methods for Practitioners, EPA QA/G-9S." Office of Environmental Information. Washington, DC. EPA/240/B-06/003. Available Online at: <http://www.epa.gov/quality/qs-docs/g9s-final.pdf>.

ARCADIS

TABLES

Table 1
Threshold Criteria for Analysis of Air Monitoring Data

Test Parameter	Threshold Criterion	Threshold Criteria Reference
TSP	0.5 mg/m^3	Calculated action level for general dust and particulates
Arsenic	10 µg/m^3	Cal/OSHA PEL[1]
Lead	50 µg/m^3	Cal/OSHA PEL[1]
Manganese	200 µg/m^3	Cal/OSHA PEL[1]
Asbestos	0.1 fibers/cm^3	Cal/OSHA PEL[1]
PM_{10}	5,000 µg/m^3	Cal/OSHA PEL[1]

Notes:

1. Cal/OSHA PEL for particulates not otherwise regulated (respiratory) used for PM_{10}

Cal/OSHA = California Division of Occupational Safety and Health Administration
cm^3 = cubic centimeter
mg/m^3 = milligrams per cubic meter
NIOSH = National Institute of Occupational Safety and Health
PEL = permissible exposure limit
PM_{10} = particulate matter less than 10 microns in diameter
TSP = total suspended particulates
µg/m^3 = micrograms per cubic meter

Table 2
Stationary Air Monitoring Analysis Method and Frequency

Analysis	Analysis Method	Frequency	Detection Limit
Arsenic[3]	Modified USEPA Method IO-3.1[1]	Four to five samples per workweek	16 ng/m^3
Asbestos[3]	NIOSH Method 7400[2]	Four to five samples per workweek	0.003 fibers/cm^3
Lead[3]	Modified USEPA Method IO-3.1[1]	Four to five samples per workweek	16 ng/m^3
Manganese[3]	Modified USEPA Method IO-3.1[1]	Four to five samples per workweek	16 ng/m^3

Notes:

1. USEPA Method IO-3.1: Compendium method for the selection, preparation and microwave or hot acid extraction of filter material for the determination of inorganic compounds in ambient air.
2. NIOSH Method 7400: Chemical species analysis of filter-collected particulate asbestos by microscopy analysis at 400x to 500x magnification.
3. No more than one sample will be collected per day, per monitoring location.

cm^3 = cubic centimeter
ng/m^3 = nanograms per cubic meter
NIOSH = National Institute of Occupational Safety and Health
USEPA = U.S. Environmental Protection Agency

Table 3
Personal Air Monitoring Analysis Method and Frequency

Analysis	Analysis Method	Frequency	Detection Limit
Arsenic[4,5]	NIOSH Method 7300[1]	Two to three samples per workweek	16 ng/m^3
Asbestos[4,5]	NIOSH Method 7400[2]	Two to three samples per workweek	0.003 fibers/cm^3
Lead[4,5]	NIOSH Method 7300[1]	Two to three samples per workweek	16 ng/m^3
Manganese[4,5]	NIOSH Method 7300[1]	Two to three samples per workweek	16 ng/m^3
Silica as Quartz[4,5]	NIOSH Method 7500[3]	Two to three samples per workweek	10 µg quartz per sample[6]

Notes:

1. NIOSH Method 7300: Chemical species analysis of filter-collected particulates by inductively coupled plasma spectroscopy analysis.
2. NIOSH Method 7400: Chemical species analysis of filter-collected particulate asbestos by microscopy analysis at 400x to 500x magnification.
3. NIOSH Method 7500: Chemical species analysis of filter-collected particulates by x-ray powder diffraction.
4. No more than one sample will be collected per day, per monitoring location.
5. Personal air monitoring shall be continued until chemicals of concern (COCs) have been determined to be below action levels for 3 consecutive days. Once COCs have been determined to be consistently below action levels, the Site Health and Safety Officer may reduce personal protective equipment to an appropriate level.
6. Quantitative limit of detection specified by OSHA sampling method Number ID-142 for Quartz And Cristobalite In Workplace Atmospheres.

cm^3 = cubic centimeter

ng/m^3 = nanograms per cubic meter

NIOSH = National Institute of Occupational Safety and Health

µg = micrograms

Table 4: Ambient Air Sampling Data Quality Objectives

DQO Step	Description
Step 1 State the Problem	Adequate measures must be taken to reduce fugitive dust emissions during construction to ensure worker and community safety in accordance with the BDCP and DCP. If adequate measures are not taken, fugitive dust could provide a source of airborne COCs to on-site and off-site receptors during construction activities.
Step 2 Identify the Goal of the Study	The primary question to be answered by the sampling event is: ▪ Are concentrations of COCs in ambient air equal to or less than PALs? The alternative actions for this project are: ▪ The concentrations of COCs in ambient air are equal to or less than the PALs; therefore, dust control measures are adequate. ▪ The concentrations of COCs in ambient air are greater than the PALs; therefore, CAs to enhance dust control measures must be implemented immediately. Based on the principal study question and the alternative actions that may result in response to the question, the following decision statement has been generated: ▪ Evaluate whether the concentrations of COCs in ambient air are less than or equal to the PALs to determine whether the dust control measures are adequate or whether CAs to enhance dust control measures must be immediately implemented.
Step 3 Identify Information Inputs	The inputs to the project decision include: • Validated, defensible analytical data collected from ambient air samples and analyzed for target chemicals: TSP, arsenic, manganese, lead, PM_{10}, and asbestos ▪ Acceptance criteria
Step 4 Define the Boundaries of the Study	The lateral boundaries of the air-monitoring study consist of the atmosphere over Parcel G and will be bound by the locations of the perimeter dust monitoring stations that will be placed at the site during the duration of construction activities. Air samplers and monitoring stations shall be located upwind and downwind of work areas, using wind direction data, and in the most practical locations.
Step 5 Develop the Analytic Approach	The decision rules for the ambient air sampling are: ▪ **IF** validated analytical results for air samples indicate that target chemicals are present in the air at concentrations equal to or less than the PALs, **THEN** the dust control measures will be considered adequate. ▪ **IF** validated analytical results for air samples indicate that at least one target chemical is present in the air at concentrations greater than the PAL, and a comparison of upwind and downwind results indicate the exceedance was not caused by onsite activities, **THEN** the dust control measures will be considered adequate. ▪ **IF** validated analytical results for air samples indicate that at least one target chemical is present in the air at concentrations greater than the PAL, and a comparison of upwind and downwind results indicate the exceedance was caused by onsite activities, **THEN** the dust control measures will be considered inadequate and CAs to enhance dust control measures will be immediately implemented.
Step 6 Specify Performance or	Decision errors include data quality and usability. To ensure the quality of the data, it will be reviewed, verified, and will undergo a validation process.

Table 4: Ambient Air Sampling Data Quality Objectives

DQO Step	Description
Acceptance Criteria	Ambient air samples shall be collected from perimeter dust monitoring stations located upwind and downwind of the site. To ensure usability of laboratory data, appropriate laboratory methods have been selected to provide the necessary laboratory detection limits. The laboratory will be provided the final version of this DCP to ensure that all specified requirements are met. Individual sample results will be compared with the PALs answer the study question.
Step 7 Describe the Plan for Obtaining Data	In general, the sampling design includes the following elements in accordance with the BDCP and DCP. Perimeter Dust Monitoring: ▪ Air monitoring stations will be installed to collect air samples upwind and downwind of work areas for the duration of construction activities. The locations of the air monitoring stations will be determined based on prevailing wind direction and location of work activities and may be modified as needed. ▪ 1 sample per workday or 2-3 samples per workweek will be collected and analyzed for TSP, arsenic, manganese, and lead. Each sample will be collected on a filter over the course of a period not to exceed 54 hours. ▪ 1 sample per workday or 2-3 samples per workweek will be collected and analyzed for asbestos. Each sample will be collected on three-piece cellulose ester filters fitted with conductive cowlings at a sample rate of between 0.5 liter per minute (L/min) and 16 L/min. Each sample will be collected over a period not to exceed 54 hours. ▪ 1 sample per workday or 2-3 samples per workweek will be collected and analyzed for PM_{10}. Each sample will be collected on a filter over a period not to exceed 54 hours; the filter will then be weighed to determine the amount of PM_{10} collected. ▪ During prolonged precipitation events (greater than 8 hours of precipitation in a 24-hour period), the air monitoring units will not be operated. An air monitoring station or individual units being inoperable shall not preclude construction activities at the associated work site. Personal Air Monitoring: ▪ A personal air monitor will be placed on one worker for each specified task requiring personnel air monitoring in the DCP. ▪ Samples will be collected throughout the 8-hour workday and will be analyzed within 24 hours. ▪ Samples will be collected and analyzed for arsenic, lead, manganese, and asbestos. ▪ Sampling will continue for each specified task until results are consistently found to be less than the site action level established in the DCP.

ARCADIS

FIGURES

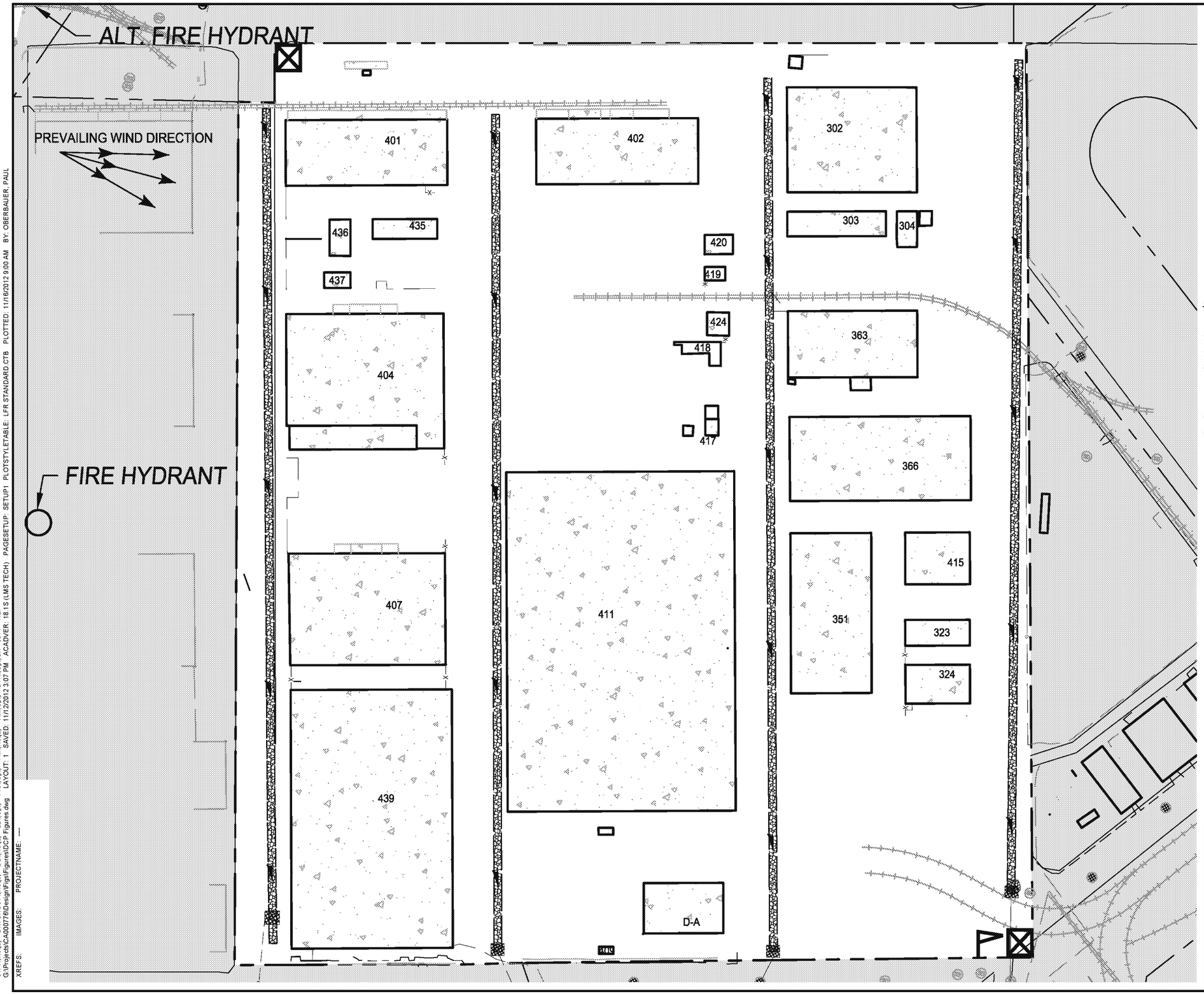

LEGEND

PARCEL G BOUNDARY

EXISTING AGGREGATE DRAINAGE SWALE WITH FLOW DIRECTION

EXISTING RAILROAD TRACKS

411 EXISTING BUILDING PAD AND FORMER BUILDING NUMBER

AIR SAMPLING STATION

WINDSOCK LOCATION

NOTE:
UPWIND AND DOWNWIND AIR SAMPLING STATIONS MAY BE RELOCATED BASED ON CHANGES IN THE DIRECTION OF PREVAILING WINDS ON PARCEL G AS INDICATED BY THE ON SITE WINDSOCK.

WIND DIRECTION: PER SOUTHWEST NAVAL FACILITIES ENGINEERING COMMAND WIND ROSE PLOTS OF HUNTERS POINT SHIPYARD 08/06/00-10/12/00

0 150' 300'
GRAPHICAL SCALE

NAVAL BASE REALIGNMENT AND CLOSURE PROGRAM
SAN FRANCISCO, CALIFORNIA
PARCEL G, HUNTERS POINT NAVAL SHIPYARD
DUST CONTROL PLAN

REAL-TIME AIR MONITORING

ARCADIS

FIGURE
1

CITY:(Reqd) DIV/GROUP:(Reqd) DB:(Reqd) LD:(Opt) PIC:(Opt) PM:(Reqd) TM:(Opt) LYR:(Opt)ON=*;OFF=REF*
G:\Projects\CA000776\Design\Figs\Figures\DCP Figures.dwg LAYOUT: 1 SAVED: 11/12/2012 3:07 PM ACADVER: 18.1S (LMS TECH) PAGESETUP: SETUP1 PLOTSTYLETABLE: LFR STANDARD.CTB PLOTTED: 11/16/2012 9:00 AM BY: OBERBAUER, PAUL
XREFS: IMAGES: PROJECTNAME: —

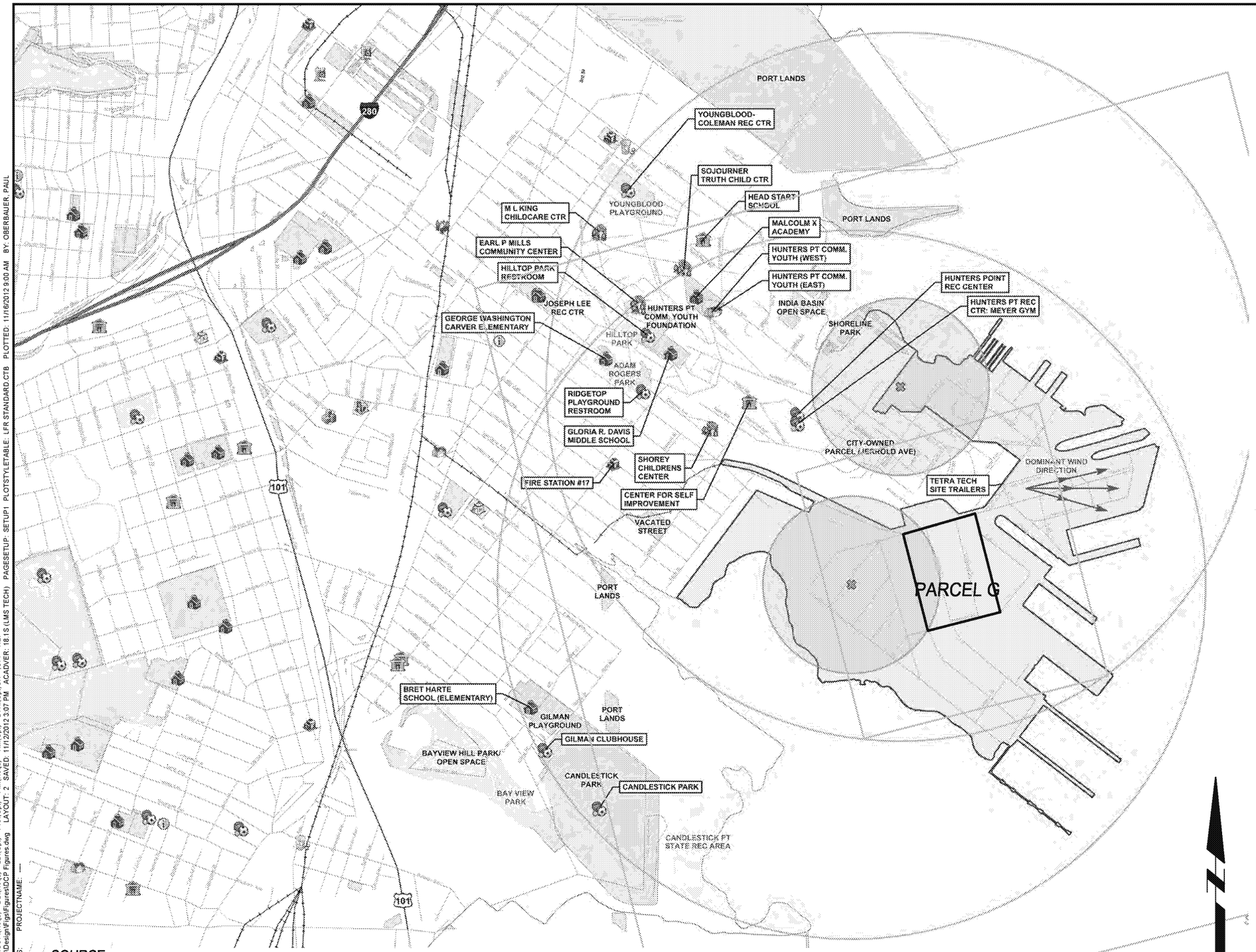

LEGEND

- FIRE DEPARTMENT
- HUMAN SERVICES
- JUVENILE PROBATION
- MAYOR/COMMUNITY DEVELOPMENT
- MENTAL HEALTH
- POLICE STATION
- PUBLIC HEALTH
- PUBLIC LIBRARY
- PUBLIC WORKS
- REAL ESTATE/ADMINISTRATIVE SERVICES
- RECREATION AND PARK
- SAN FRANCISCO COMMUNITY COLLEGE DISTRICT
- SAN FRANCISCO PRIVATE SCHOOL
- SAN FRANCISCO UNIFIED SCHOOL DISTRICT
- SHERIFF
- RADIUS CENTERPOINT
- ROAD
- HIGHWAY
- INTERSTATE HIGHWAY
- RAILROAD
- PARK
- WATER
- SAN FRANCISCO PUBLIC LAND
- QUARTER MILE BUFFER
- ONE MILE BUFFER
- HUNTERS POINT SHIPYARD BOUNDARY

SOURCE:
IMAGE SOURCE: HUNTERS POINT NAVAL SHIPYARD BASEWIDE DUST CONTROL PLAN, TETRATECH EC, INC. NOVEMBER, 2010.
WIND DIRECTION: PER SOUTHWEST NAVAL FACILITIES ENGINEERING COMMAND WIND ROSE PLOTS OF HUNTERS POINT SHIPYARD 08/06/00-10/12/00
SAN FANCISCO FACILITY LOCATIONS: RETRIEVED FROM CITY AND COUNTY OF SAN FRANCISCO WEBSITE (SFGIS DOWNLOAD)

NAVAL BASE REALIGNMENT AND CLOSURE PROGRAM
SAN FRANCISCO, CALIFORNIA
HUNTERS POINT NAVAL SHIPYARD PARCEL G
DUST CONTROL PLAN

POTENTIAL COMMUNITY RECEPTORS AND BUFFER AREAS

ARCADIS

FIGURE
2

CITY:(Reqd) DIV/GROUP:(Reqd) DB:(Reqd) LD:(Opt) PIC:(Opt) PM:(Reqd) TM:(Opt) LYR:(Opt)ON=*;OFF=*REF*
G:\Projects\CA000778\Design\Figs\FiguresDCP Figures.dwg LAYOUT: 2 SAVED: 11/1/2012 3:07 PM ACADVER: 18.1S (LMS TECH) PAGESETUP: SETUP1 PLOTSTYLETABLE: LFR STANDARD.CTB PLOTTED: 11/6/2012 9:00 AM BY: OBERBAUER, PAUL
XREFS: IMAGES: PROJECTNAME: —

Attachment A

Final Basewide Dust Control Plan

DEPARTMENT OF THE NAVY
BASE REALIGNMENT AND CLOSURE
PROGRAM MANAGEMENT OFFICE WEST
1455 FRAZEE RD, SUITE 900
SAN DIEGO, CA 92108-4310

Ser BPMOW.cny/0120

NOV 29 2010

Mr. Mark Ripperda (SFD 8-1)
U.S. Environmental Protection Agency, Region IX
75 Hawthorne Street
San Francisco, CA 94105-3901

Mr. Larry Morgan
California Department of Public Health
1616 Capitol Avenue, MS 7402
P.O. Box 997377
Sacramento, CA 95899-7377

Dear Regulatory Team Members:

Enclosed please find the Final Dust Control Plan, Revision 1, Hunters Point Shipyard, San Francisco, California. Minor revisions to Sections 4.1, 4.6, and 5.1 have been included to clarify current work practices at the project site.

If you have any questions regarding the enclosed document, please contact Mr. Chris Yantos at (619) 532-0912, or Mr. Keith Forman at (619) 532-0913 at your earliest convenience.

Sincerely,

KEITH FORMAN
BRAC Environmental Coordinator
By direction of the Director

Enclosure: 1. Final, Dust Control Plan, Revision 1, Hunters Point Shipyard, San Francisco, California, November 2010

Copy to:

Diane Silva (2 Hard Copies, 1 unbound, CD)
NAVFAC Southwest (Code EV33)
Naval Base San Diego
2965 Mole Rd., Bldg. 3519
San Diego, CA 92136

Laurie Lowman (3 Hard Copies and 3 CDs)
Building 1971
NWS P.O. Drawer 260
Yorktown, VA. 23691-0260

Amy Brownell (CD Only)
SF Department of Public Health
1390 Market St., Suite 210
San Francisco, Ca 94102

Elaine Warren (CD only)
Office of the City Attorney
City Hall, Room 234
1 Dr. Carlton B. Goodlett Place
San Francisco, CA 94102-4682

Leslie Lundgren (Hard Copy and CD)
33 New Montgomery Street, Suite 2000
San Francisco, CA 94105

Dorinda Shipman (Hard Copy and CD)
Treadwell and Rollo
555 Montgomery St., Suite 1300
San Francisco, CA 94111

Stephen Proud (CD Only)
Lennar/BVHP
1 California St., Suite 2700
San Francisco, CA 94111

Stan DeSouza (CD Only)
1680 Mission St., First Floor
San Francisco, CA 94103-2414

Karla Brasaemle (Hard Copy and CD)
90 New Montgomery St., Suite 710
San Francisco, CA 94105

Ryan Miya (Hard Copy and CD)
Department of Toxic Substance Control
700 Heinz Avenue, Bldg. F, Suite 200
Berkeley, CA 94710

Michael Sharpless (CD Only)
Paul Hastings, et al.
55 2nd Street, 24th Floor
San Francisco, CA 94104-2635

Tamara Davidson (CD Only)
SF Health Department
101 Grove Street, Rm 217
San Francisco, CA 94102

Leon Muhammad (Hard Copy and CD)
5048 3rd Street
San Francisco, CA 94124

Linda Malvino (Hard Copy and CD)
Mactec Engineering and Consulting, Inc.
5341 Old Redwood Highway, Suite 300
Petaluma, CA 94954

Michael McGowan (CD only)
4634 3rd Street
San Francisco, CA 94124

Alex Lantsberg (CD Only)
991 Innes Avenue
San Francisco, CA 94124

Ser BPMOW.cny/0120
NOV 29 2010

Kristine Enea (CD Only)
951 Innes Avenue
San Francisco, CA 94124

Randy Brandt (CD Only)
475 14th Street, Suite 400
Oakland, CA 94612

Sarah Kloss (CD Only)
75 Hawthorne Street
San Francisco, CA 94105

Matt Hagemann (CD Only)
2503 Eastbluff Drive, Suite 206
Newport Beach, CA 92660

Anna E. Walden Library (Hard Copy and CD)
5075 Third Street
San Francisco, CA 94124

Janice Torbet (Hard Copy and CD)
100 Larkin Street
Gov. Information Ctr., 5th Floor
San Francisco, CA 94102

ED_002781A_00003896-00246

Base Realignment and Closure
Program Management Office West
1455 Frazee Road, Suite 900
San Diego, California 92108-4310

CONTRACT NO. N62473-07-D-3211
CTO NO. 0018

FINAL
BASEWIDE DUST CONTROL PLAN
REVISION 1

November 29, 2010

DCN: ECSD-3211-0018-0002.R1

HUNTERS POINT SHIPYARD
SAN FRANCISCO, CALIFORNIA

Base Realignment and Closure
Program Management Office West
1455 Frazee Road, Suite 900
San Diego, California 92108-4310

CONTRACT NO. N62473-07-D-3211
CTO NO. 0018

FINAL

BASEWIDE DUST CONTROL PLAN
REVISION 1
November 29, 2010

HUNTERS POINT SHIPYARD
SAN FRANCISCO, CALIFORNIA

DCN: ECSD-3211-0018-0002.R1

Prepared by:

TETRA TECH EC, INC.
1230 Columbia Street, Suite 750
San Diego, California 92101-8536

Shanti Montgomery
Project Manager

Bill Dougherty
Senior Project Manager

TABLE OF CONTENTS

PAGE

ABBREVIATIONS AND ACRONYMS iii

1.0 INTRODUCTION 1-1
1.1 DUST CONTROL PLAN FOR TIME-CRITICAL REMOVAL ACTIONS 1-1
1.2 REGULATORY BASIS 1-1
1.3 REPORT ORGANIZATION 1-2

2.0 BACKGROUND 2-1
2.1 SITE DESCRIPTION AND HISTORY 2-1
2.2 SCOPE OF WORK 2-1

3.0 POTENTIAL SOURCES OF FUGITIVE DUST 3-1

4.0 GENERAL CONSTRUCTION DUST CONTROL METHODS 4-1
4.1 CONSTRUCTION TRAFFIC 4-1
4.1.1 Track-out Prevention 4-1
4.1.2 Traffic Control 4-1
4.2 SITE PREPARATION AND REMEDIATION ACTIVITIES 4-2
4.3 EXCAVATION ACTIVITIES 4-3
4.4 MATERIAL STOCKPILES 4-3
4.5 BUILDING DEMOLITION 4-3
4.6 BULK SOIL AND DEBRIS TRANSPORT 4-4
4.7 POST-CONSTRUCTION STABILIZATION OF DISTURBED AREAS 4-4
4.8 RECYCLING 4-4

5.0 AIR MONITORING 5-1
5.1 AIR QUALITY MONITORING 5-1
5.1.1 Monitoring Site Locations 5-2
5.1.2 Total Suspended Particulates, Manganese, and Lead 5-2
5.1.3 PM_{10} 5-3
5.1.4 Asbestos 5-3
5.2 AIR SAMPLING FOR RADIONUCLIDES OF CONCERN 5-3
5.3 PERSONNEL MONITORING 5-3
5.4 QUALITY CONTROL PROCEDURES 5-4

6.0 REFERENCES 6-1

TABLE OF CONTENTS
(Continued)

TABLES

Table 5-1 Sampling Frequency and Monitoring Methods

Table 5-2 Radionuclide Airborne Concentration Guidelines

FIGURES

Figure 1-1 Hunters Point Shipyard Location Map

Figure 4-1 Dust Control Track-out Points and Air Monitoring Locations

Figure 5-1 Hunters Point Potential Community Receptors and Buffer Areas

ABBREVIATIONS AND ACRONYMS

$\mu g/m^3$	micrograms per cubic meter
ALI	annual limit
ATCM	Airborne Toxic Control Measure
BAAQMD	Bay Area Air Quality Management District
Cal/OSHA	California Occupational Safety and Health Administration
CCR	*California Code of Regulations*
CERCLA	Comprehensive Environmental Response, Compensation, and Liability Act
CFR	*Code of Federal Regulations*
DAC	derived airborne concentration
DON	Department of the Navy
EPA	U.S. Environmental Protection Agency
ft^3/min	cubic feet per minute
HPS	Hunters Point Shipyard
L/min	liters per minute
mg/m^3	milligrams per cubic meter
mph	miles per hour
NIOSH	National Institute for Occupational Safety and Health
NOA	naturally occurring asbestos
PEL	permissible exposure limit
PESM	Project Environmental Safety Manager
PM_{10}	particulate matter smaller than 10 microns in diameter
QC	quality control
ROC	radionuclide of concern
SSHO	Site Safety and Health Officer
TCRA	time-critical removal action
TSP	total suspended particulates
TWA	time-weighted average

ED_002781A_00003896-00251

This page intentionally left blank.

1.0 INTRODUCTION

1.1 DUST CONTROL PLAN FOR TIME-CRITICAL REMOVAL ACTIONS

This Basewide Dust Control Plan was prepared for all work performed by contractors during the time-critical removal actions (TCRAs) at Hunters Point Shipyard (HPS) in San Francisco, California (Figure 1-1). This plan was developed to ensure that the Department of the Navy (DON) maintains a coordinated approach for dust control and air monitoring activities across multiple contracts. At a minimum, all contactors will be required to adhere to the requirements set forth in this document.

This document will be evaluated as new contracts are awarded to ensure that the dust mitigation requirements meet the substantive dust mitigation requirements presented in the Asbestos Airborne Toxic Control Measure (ATCM) for Construction, *California Code of Regulations* (CCR) Title 17, Section 93105. Contractors may be required to submit addenda to address work activities not presented in this plan.

1.2 REGULATORY BASIS

The TCRAs at HPS are being conducted in accordance with the requirements of the Comprehensive Environmental Response, Compensation, and Liability Act (CERCLA). Regulatory oversight and guidance are provided by the U.S. Environmental Protection Agency (EPA), the California Environmental Protection Agency, and the Regional Water Quality Control Board. The project areas are located within the jurisdiction of the Bay Area Air Quality Management District (BAAQMD). However, as TCRAs under CERCLA, the projects are not required to have permits from the BAAQMD. Nevertheless, the projects need to meet the substantive aspects of BAAQMD air quality requirements.

This Basewide Dust Control Plan specifically identifies the steps that will be taken to reduce fugitive dust emissions during excavation, transportation of soil and debris, and installation/removal of construction site infrastructure. This plan describes measures to address the substantive requirements of the following applicable regulations:

- CCR Title 17, Section 93105 (e), ATCM for Construction Grading, Quarrying, and Surface Mining Operations – Requirements for Construction and Grading Operations – Areas Greater Than One Acre
- BAAQMD Regulation 6, Particulate Matter and Visible Emissions, 6-301 Ringelmann No. 1 Limitation, 6-302 Opacity Limitation, and 6-305 Visible Particles

ED_002781A_00003896-00253

1.3 REPORT ORGANIZATION

Section 2.0 of this Basewide Dust Control Plan provides site background and history. Section 3.0 describes potential sources of fugitive dust. Section 4.0 discusses control measures for dust generated by general construction activities. Section 5.0 describes air monitoring requirements. Section 6.0 presents references cited in this plan. Tables and figures follow the text.

2.0 BACKGROUND

2.1 SITE DESCRIPTION AND HISTORY

HPS is located in the City and County of San Francisco, California, on a long promontory in the southeastern part of San Francisco that extends east into San Francisco Bay (Figure 1-1). Presently, HPS includes 866 acres (420 acres on land and 446 acres under water). The land portion of HPS was purchased by the DON in 1939 and leased to Bethlehem Steel Corporation. At the start of World War II in 1941, the DON took possession of the property and operated it as a shipbuilding, repair, and maintenance facility until 1974. Throughout the 1940s, 1950s, and 1960s, the DON excavated the hills surrounding the shipyard, and used the resulting spoils along with available dredge material and engineered fill material to expand the shipyard's shoreline into San Francisco Bay. The DON deactivated HPS in 1974. From 1976 to 1986, the DON leased HPS to Triple A Machine Shop, Inc., a private ship repair company. In 1986, Triple A Machine Shop ceased operations at HPS, and the DON resumed occupancy through 1989.

Because of previous hazardous operations on the site, HPS was placed on the National Priorities List in 1989 as a Superfund site pursuant to CERCLA, as amended by the Superfund Amendments and Reauthorization Act of 1986. HPS then came under the administrative jurisdiction of the Treasure Island Naval Station in April 1990.

In 1991, HPS was placed on the Navy's Base Realignment and Closure list, and its mission as a Navy shipyard ended in April 1994. Closure activities at HPS involve environmental remediation activities and making the property available for non-defense use. On March 31, 1994, control of HPS was transferred from the Treasure Island Naval Station to the Naval Facilities Engineering Command, Western Division (now Engineering Field Activity West) in San Bruno, California. In October 1999, Naval Facilities Engineering Command Southwest assumed management of HPS.

2.2 SCOPE OF WORK

The DON has various active contracts at HPS. The contracts cover the removal and remediation of potentially radiologically impacted sanitary sewer and storm drain lines, radiological and nonradiological waste disposal, long-term monitoring, site investigations, and other remedial actions.

In general, work activities may consist of one or more of the following: removal of asphalt pavement, geophysical investigations and utility clearance of excavation areas, establishment of soil and debris stockpile areas, excavation of impacted soil and piping, backfill of excavations, building demolition, soil/groundwater sampling, and site restoration.

This page intentionally left blank.

3.0 POTENTIAL SOURCES OF FUGITIVE DUST

Site activities have the potential to generate air emissions in the form of fugitive dust. Possible sources of emissions include the following activities:

- Construction Traffic – Movement of construction equipment around the construction areas is capable of creating construction emissions in excavated or cleared areas.
- Site Preparation – Asphalt and vegetation removal will increase the potential for fugitive dust emissions through wind erosion.
- Excavation – Removal of soil from the ground and loading it either onto screening pads or into waiting vehicles could cause fugitive dust emissions.
- Material Stockpiles – Soil that has been cleared of radioactivity may be stockpiled prior to being used as backfill or shipped to appropriate disposal facilities. Soil will be loaded into trucks for final disposal. Fugitive emissions during stockpiling and truck loading, as well as wind erosion, are possible.
- Building Demolition – Demolition of buildings may produce fugitive dust emissions. Structures will be evaluated for lead and asbestos contamination by a California-certified consultant. Based on the resulting data, site-specific Demolition Plans will be developed that describe the controls necessary to minimize fugitive dust.
- Transportation of Solid Bulk Material – If material is left uncovered, fugitive emissions could occur.
- Site Restoration – Backfilling and revegetating/restoration of the excavated areas may produce fugitive dust emissions.
- Recycling – Asphalt and concrete are typically recycled on-site, which may produce fugitive dust emissions.

This page intentionally left blank.

4.0 GENERAL CONSTRUCTION DUST CONTROL METHODS

Control methods for fugitive dust are described for the following emissions generated from the construction activities at the project sites:

- Dust entrained during on-site travel on paved and unpaved surfaces
- Dust entrained during travel to/from HPS
- Dust entrained during vegetation removal, excavation, material screening, use of conveyors, backfill, and final grading at the construction site
- Dust entrained during soil stockpiling, and loading and unloading operations
- Wind erosion of areas disturbed during construction activities
- Vehicle emissions associated with construction equipment

4.1 CONSTRUCTION TRAFFIC

4.1.1 Track-out Prevention

Track-out of loose materials will be controlled by use of tire-cleaning rumble grid plates at the access point from project sites to the paved road to prevent track-out of mud or loose soils onto roadways. These track-out prevention control points will be established at the primary HPS site access and egress points. The locations of the track-out prevention control points are shown on Figure 4-1. To ensure that the tires are free from mud or loose soils prior to leaving the site, the bulk-loaded trucks and commercial vehicles will be required to pass over a gravel pad (at least 50 consecutive feet in length from the intersection with the paved public road) and over the rumble grid plates where the soil residue from the tires will be removed.

Any visible track-out onto a paved road where vehicles exit the HPS project site will be removed by wet sweeping at the end of the work day or at least once per day.

All bulk-loaded trucks used to transport naturally occurring asbestos (NOA)-containing material off-site will be cleaned by a wheel wash station before leaving the site.

4.1.2 Traffic Control

Fugitive dust emissions from construction traffic traveling on unpaved surfaces will be controlled through the following mitigation methods:

- Actively used unpaved roads in the project construction sites will be watered every 2 hours or frequently enough to maintain adequate wetness. The frequency of watering can be reduced or eliminated during periods of precipitation. Watering frequency may be increased during hotter periods or windy conditions.

- No vehicle will exceed 15 miles per hour (mph) within the construction site and 5 mph in work areas.

The following mitigation measures will be followed for fugitive dust emissions from construction traffic traveling on paved streets:

- Bulk-loaded trucks used for transportation of soil and other heavy earth-moving equipment will not be allowed to exit the construction sites, except through one of the track-out prevention control points.
- Construction areas adjacent to any paved roadway will be treated with best management practices, as specified in the Stormwater Pollution Prevention Plan.
- Roadways within the site will be swept with a wet sweeper or washed down to remove soils. The accumulated soils will be routinely removed from non-traffic areas such as gutters and curbs.
- No vehicle will exceed 15 mph within the construction site and 5 mph in work areas.

If any of the preceding mitigation methods fail to properly control fugitive dust emissions, one or more of the following reasonably available control measures will be applied:

- Unpaved active portions of the construction sites will be watered or treated with dust control solutions to minimize windblown dust and dust generated by vehicle traffic.
- Paved portions of the construction sites will be cleaned more frequently to control windblown dust and dust generated by vehicle traffic. Water may also be applied to the paved roads if necessary.
- Gravel, recrushed/recycled asphalt, or other material of low silt content (less than 5 percent) will be applied to a depth of 3 or more inches, if necessary. Serpentine-containing material will not be used for this purpose.
- Vehicle trips will be reduced if necessary.

4.2 SITE PREPARATION AND REMEDIATION ACTIVITIES

Fugitive dust emissions from site preparation, excavation, loading, spreading, stockpiling, backfill, and compaction activities will be controlled using the following methods:

- During asphalt removal, surface soils will be pre-wetted in the area to be removed prior to commencing the activity. Soil moisture content will be sufficiently maintained to minimize fugitive dust creation.
- All unpaved, inactive portions of the work area and inactive storage piles that are inactive for more than 7 days will be watered or chemical soil stabilizer applied to minimize fugitive dust creation.

4.3 EXCAVATION ACTIVITIES

Fugitive dust emissions from excavation and loading activities will be controlled using the following methods:

- Soil will be wetted prior to excavation activities to reduce dust migration. Additional water will be added during active excavation, material handling, and loading on an as-needed basis. Active excavation areas will be wetted every 2 hours during periods of dry weather or in windy conditions. A water truck or water buffalo shall be dedicated to excavation and removal operations.
- The area subject to excavation and other construction activity will be limited at any one time. A chemical soil stabilizer will be applied to on-site storage piles of soil or sand.
- The height from which excavated soil is dropped either to trucks, stockpiles, or pads will be minimized.
- Trucks moving potentially radiologically impacted soils will be loaded over a plastic liner to assist in the cleanup of any soil from the loading process.
- Trucks shall be equipped with tarping systems to cover loads during soil transport.
- Truck traffic shall be minimized to the shortest haul routes from the work areas, screening yard, and stockpile areas.
- Chemical soil stabilizer will be applied in sufficient quantities to disturbed areas so as to create a stabilized surface.
- Backfill materials will be wetted on an as-needed basis to maintain moisture. Loader buckets will be emptied slowly and drop height from loader bucket minimized. A water truck or water buffalo will be dedicated to backfilling operations.
- A chemical soil stabilizer will be applied to backfill material and storage piles when not actively handled (i.e., no activity in 7 days).

4.4 MATERIAL STOCKPILES

Fugitive dust emissions from soil storage piles will be controlled by using a temporary cover, water, or a chemical soil stabilizer.

4.5 BUILDING DEMOLITION

Structures will be evaluated for lead and asbestos contamination by a California-certified consultant. Based on the resulting data, site-specific Demolition Plans will be developed that describe the controls necessary to minimize fugitive dust.

ED_002781A_00003896-00261

4.6 BULK SOLID MATERIAL TRANSPORT

- All trucks used to transport import solid bulk material to HPS will be covered (tarped) or the material will be loaded in such a manner that the material does not touch the front, back, or sides of the cargo compartment at any point less than 6 inches from the top and that no point of the load extends above the top of the cargo compartment.
- All trucks used to transport solid bulk material from the HPS project site will be covered (tarped for non-radiologically impacted material or hard-top containers/bins used for radiologically impacted material) prior to leaving the site.
- Vehicles will be checked to ensure that they are tarped or covers are closed to prevent any spillage, and any spillage material on the shelf, on exterior surfaces of the cargo compartment, or on wheels will be removed prior to leaving the site.
- Trucks used for solid bulk material transport will be inspected to ensure that no spillage can occur from holes or other openings in the cargo compartment.
- Bulk loaded trucks will exit the HPS project site via an established track-out control point.

4.7 POST-CONSTRUCTION STABILIZATION OF DISTURBED AREAS

Unpaved areas disturbed during excavation, grading, and/or construction activities will be covered with one of the following to reduce dust generation on the site:

- An approved vegetative cover
- Surface swales to control stormwater
- Coverage with a minimum of 3 inches of non-asbestos-containing material
- Hard surface paving

4.8 RECYCLING

Non-impacted asphalt and concrete are typically recycled on-site and may produce fugitive dust emissions. Fugitive dust emissions from recycling activities will be controlled using the following methods:

- Asphalt and concrete will be wetted prior to handling to reduce dust migration. A water truck or water buffalo shall be dedicated to this activity.
- Additional water will be added during active grinding, sorting, material handling, and loading, as needed, to control fugitive dust.
- The height from which crushed material is dropped either to trucks, stockpiles, or pads will be minimized.
- Trucks shall be equipped with tarping systems to cover loads during transport.

- Truck traffic shall be minimized to the shortest haul routes from the work areas, screening yard, and stockpile areas.
- A chemical soil stabilizer will be applied in sufficient quantities to stockpiles so as to create a stabilized surface.

This page intentionally left blank.

5.0 AIR MONITORING

Air monitoring is performed to ensure worker and community safety in accordance with NIOSH approved air sampling methodology. Figure 5-1 presents a map of known sensitive community receptors within 1 mile of HPS. Three types of air monitoring are conducted during construction activities:

- Air quality monitoring (total suspended particulates [TSP], manganese, lead, particulate matter smaller than 10 microns in diameter [PM_{10}], and asbestos)
- Radionuclides of concern (ROCs) air monitoring
- Personnel monitoring

During prolonged precipitation events (greater than 8 hours of precipitation in a 24-hour period), the air monitoring units will not be operated. An air monitoring station or individual units being inoperable shall not preclude construction activities at the associated work site.

5.1 AIR QUALITY MONITORING

The air monitoring for HPS will include ambient air quality monitoring stations that will be established to perform monitoring during field activities. Air samples will be collected at the monitoring stations and will be analyzed for the airborne chemicals of concern, which include TSP, manganese, lead, PM_{10}, and asbestos. The air quality sampling will be used to assess the status of air quality compliance and to evaluate modifications to basewide activities in the event of compliance concerns. The meteorological data for the general work areas, specifically wind speed and direction, will be used to identify the most appropriate locations for the air monitoring stations. Air samplers and monitoring stations will be located upwind and downwind of work areas, using wind direction data, and in the most practical locations.

Analytical results for TSP will be compared with a standard of 0.5 milligram per cubic meter (mg/m^3) (level chosen to minimize overall permissible dust release from site), 200 micrograms per cubic meter ($\mu g/m^3$) for manganese (California Occupational Safety and Health Administration [Cal/OSHA] permissible exposure limit [PEL]), 50 $\mu g/m^3$ time-weighted average (TWA) 30 days for lead (Cal/OSHA), and 5 mg/m^3 for PM_{10} (California Ambient Air Quality Standard). If HPS activities are the cause of exceedances, additional control measures may be considered.

During prolonged precipitation events (greater than 8 hours of precipitation in a 24-hour period), the air monitoring units will not be operated. An air monitoring station or individual units being inoperable shall not preclude construction activities at the associated work site.

5.1.1 Monitoring Site Locations

Air monitoring stations will be installed to collect air samples upwind and downwind of work areas for the duration of the activities. The predominant wind direction at HPS is from the west. Established locations of air monitoring stations are shown on Figure 4-1. Air monitoring is performed to estimate and assess the impact of the field activities. The locations of the air monitoring stations to be used will be determined based on the prevailing wind direction and work activities and may be modified as needed. Monitoring stations will not be moved while they are sampling. Radiological air monitoring will be conducted both upwind and downwind of the excavations and in the immediate vicinity of each excavation site in accordance with the applicable radiation work permit requirements and the Hunters Point Shipyard Standard Operating Procedure, HPO-Tt-008, Air Sampling and Sample Analysis (TtEC 2005). In addition, a windsock will be set up at each site to show wind direction.

Each monitoring station will include three different monitoring systems: one each for TSP (that will be analyzed for manganese and lead), PM_{10}, and asbestos. Descriptions of these samplers are provided below. Sampling frequency and monitoring methods are listed in Table 5-1.

5.1.2 Total Suspended Particulates, Manganese, and Lead

TSP will be sampled with a high-volume (39 to 60 cubic feet per minute [ft^3/min]) air sampler in accordance with EPA's reference sampling method for TSP, described in Title 40 *Code of Federal Regulations* (CFR), Part 50, Subpart B. Each sample will be collected on a filter over the course of a period not to exceed 54 hours; the filter is then weighed to determine the amount of TSP collected. Once the filter weight has been determined, the sample will be analyzed for manganese in accordance with one of the IO-3 methods identified in EPA's Compendium of Methods for the Determination of Inorganic Compounds in Ambient Air (EPA 1999) and lead in accordance with a modified EPA Method 12. The equipment specifications and sampling procedures will comply with the specifications provided in the regulations for the sampler, filter, accuracy, calibration, and quality assurances.

The flow of the high-volume air sampler will be properly calibrated to establish traceability of the field measurement. Calibrations shall follow the guidelines specified in 40 CFR, Part 50, Section 9.3, and Section 2.6 of the EPA Quality Assurance Handbook for Air Pollution Measurement Systems, Volume II: Ambient Air Specific Methods (EPA 1998).

Field logs should be used to properly record information after collecting the samples. Appropriate field data, such as date, time, sample identification, calibration data, sample location, ambient temperature and pressure, and any additional information or observations that could influence analyses of the results, will be entered on the field logs.

ED_002781A_00003896-00266

5.1.3 PM_{10}

PM_{10} will be sampled in accordance with EPA's reference sampling method for PM_{10}, described in 40 CFR 50, Subpart J. Each sample be collected on a filter over a period not to exceed 54 hours; the filter is then weighed to determine the amount of PM_{10} collected.

5.1.4 Asbestos

Asbestos will be sampled and analyzed in accordance with the National Institute for Occupational Safety and Health (NIOSH) Method 7400, from the NIOSH Manual of Analytical Methods (NIOSH 1994). Method 7400 requires that samples be collected on three-piece cellulose ester filters fitted with conductive cowlings at a sampling rate of between 0.5 liter per minute (L/min) and 16 L/min. Each sample will be collected over a period not to exceed 54 hours.

5.2 AIR SAMPLING FOR RADIONUCLIDES OF CONCERN

As specified in the Base-wide Radiological Work Plan (TtEC 2007), airborne radioactivity monitoring (continuous or grab samples) will be conducted during the course of work. To control occupational exposures, establish personal protective equipment, and determine respiratory protection requirements, monitoring and trending for airborne radioactive material will be performed as necessary. Each ROC, as specified in 10 CFR 20, Appendix B, has a derived airborne concentration (DAC) value. DAC is defined as the concentration in air that will result in an intake of 1 annual limit (ALI) if breathed for a working year under high working conditions (inhalation rate of 1.2 cubic meters of air per hour). ALI is the derived limit for the quantity of radioactive material intake into the body of a worker by inhalation or ingestion in a year.

Engineered controls will be developed in conjunction with the Radiological Affairs Support Office. They will be implemented if required to maintain airborne concentrations below 10 percent of the applicable DAC value for the ROCs at the sites. Table 5-2 shows the ROCs and their respective DAC values.

5.3 PERSONNEL MONITORING

The Site Safety and Health Officer (SSHO) will conduct monitoring to ensure that each site worker is adequately protected. Site monitoring and sampling includes real-time air monitoring and perimeter monitoring. In consultation with the Project Environmental Safety Manager (PESM), the SSHO will determine if personal or addition perimeter monitoring is required to evaluate the potential for personnel exposure. All air quality monitoring results that exceed the Cal/OSHA PELs (asbestos – 0.1 fiber/cubic centimeter, PM_{10} – 5,000 $\mu g/m^3$, TSP – 10 mg/m^3, manganese – 200 $\mu g/m^3$, lead – 50 $\mu g/m^3$) will be immediately reported to the PESM, who will evaluate the results. If the evaluation finds elevated results, personnel monitoring may be

required. Depending on the elevated results, addition sampling may be conducted for asbestos, particulate matter, or lead.

5.4 QUALITY CONTROL PROCEDURES

A quality control (QC) program will be implemented to ensure that collected data are accurate and precise in order to effectively characterize both the magnitude and variations in ambient conditions at the monitoring stations. Complete documentation of the results of routine operations and QC aspects of the program, including all log notes, calibration forms, and certifications, will be maintained on file. Key elements of the routine field QC program will include:

- Routine visits to each sampling station over the sampling period to check sampler pump flow rates, verify operation and sample conditions, and note any ambient conditions that could affect the accuracy or representativeness of the sample
- Calibration of the sampling pumps and flow devices
- Routine preventive maintenance of all equipment components

The analytical laboratory performing the sample analyses will establish a QC program that will also ensure the accuracy of the data as the data are being analyzed. Key elements of the routine QC procedures implemented during the sample analyses will include analysis of laboratory blanks and spikes and calibration of the analytical instruments, as specified in the appropriate methodology.

Dust control activities will be documented during construction activities and included in the Daily Contractor Production Reports. Available air data will be submitted monthly to the DON for distribution to interested parties and will be posted online to the Base Realignment and Closure Program Management Office web page at:

- http://www.bracpmo.navy.mil/basepage.aspx?baseid=45&state=California&name=hps

ED_002781A_00003896-00268

6.0 REFERENCES

EPA (U.S. Environmental Protection Agency). 1998. Quality Assurance Handbook for Air Pollution Measurement Systems, Volume II: Ambient Air Specific Methods.

——————. 1999. Compendium of Methods for the Determination of Inorganic Compounds in Ambient Air. EPA/625/R-96/010a. June.

NIOSH (National Institute for Occupational Safety and Health). 1994. NIOSH Manual of Analytical Methods. Method 7400. August.

TtEC (Tetra Tech EC, Inc.). 2005. Standard Operating Procedure PO-TtFW-008, Air Sampling and Sample Analysis.

——————. 2007. Final Base-wide Radiological Work Plan, Revision 1, Hunters Point Shipyard, San Francisco, California. October 5.

This page intentionally left blank.

TABLES

This page intentionally left blank.

TABLE 5-1

SAMPLING FREQUENCY AND MONITORING METHODS

Test Scenario	Type of Analysis	Monitoring Method	Frequency
Excavation and soil handling (upwind and downwind)	TSP	40 CFR, Part 50, Subpart B Analysis Method IO-3 (Mn) Analysis Method 12 (Pb)	1 sample per workday 2–3 samples per workweek
	PM_{10}	40 CFR, Part 50, Subpart J	1 sample per workday 2–3 samples per workweek
	Asbestos	NIOSH Method 7400	1 sample per workday 2–3 samples per workweek
	ROCs	HPO-TtFW-008*	1 sample per workday 2–3 samples per workweek
Backfill and site restoration (upwind and downwind)	TSP	40 CFR, Part 50, Subpart B Analysis Method IO-3 (Mn) Analysis Method 12 (Pb)	1 sample per workday 2–3 samples per workweek
	PM_{10}	40 CFR, Part 50, Subpart J	1 sample per workday 2–3 samples per workweek
	Asbestos	NIOSH Method 7400	1 sample per workday 2–3 samples per workweek
	ROCs	HPO-TtFW-008*	1 sample per workday 2–3 samples per workweek

Notes:

* PO-TtFW-008, Air Sampling and Sample Analysis (TtEC 2005), is a standard operating procedure used for radiological air sampling activities supporting Hunters Point Shipyard field projects.

Abbreviations and Acronyms:

CFR – Code of Federal Regulations
Mn – manganese
NIOSH – National Institute for Occupational Safety and Health
Pb – lead
PM_{10} – particulate matter smaller than 10 microns in diameter
ROC – radionuclide of concern
TSP – total suspended particulates

This page intentionally left blank.

TABLE 5-2

RADIONUCLIDE AIRBORNE CONCENTRATION GUIDELINES

Radionuclide	Worker*	
	DAC (µCi/mL)	10% DAC (µCi/mL)
Radium-226	3.0E-10	3.0E-11
Strontium-90	2.0E-9	2.0E-10
Cesium-137	6.0E-8	6.0E-9

Notes:

* The guideline values were determined using the NRC's 10 CFR, Part 20, Appendix B.

Abbreviations and Acronyms:

µCi/mL – microcuries per milliliter (activity)
CFR – *Code of Federal Regulations*
DAC – derived airborne concentration
NRC – Nuclear Regulatory Commission

This page intentionally left blank.

FIGURES

This page intentionally left blank.

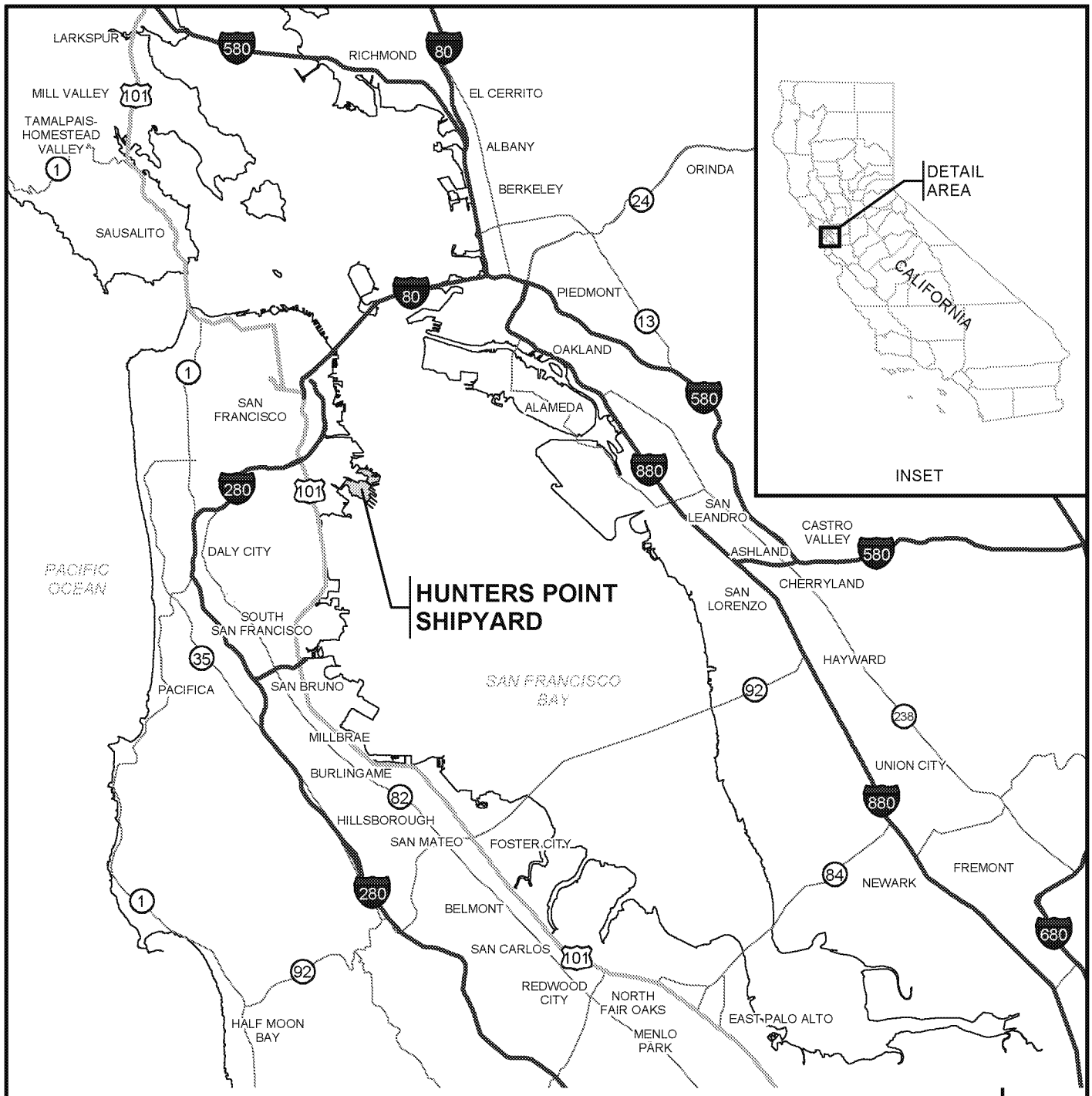

BASE REALIGNMENT AND CLOSURE
PROGRAM MANAGEMENT OFFICE WEST
SAN DIEGO, CALIFORNIA

BASEWIDE DUST CONTROL PLAN

FIGURE 1-1

HUNTERS POINT SHIPYARD LOCATION MAP

HUNTERS POINT SHIPYARD
SAN FRANCISCO, CALIFORNIA

REVIEW: 0
AUTHOR: GFG
DCN: ECSD-3211-0018-0002.R1
FILE NUMBER: 090544R4748.mxd

TETRA TECH EC, INC.

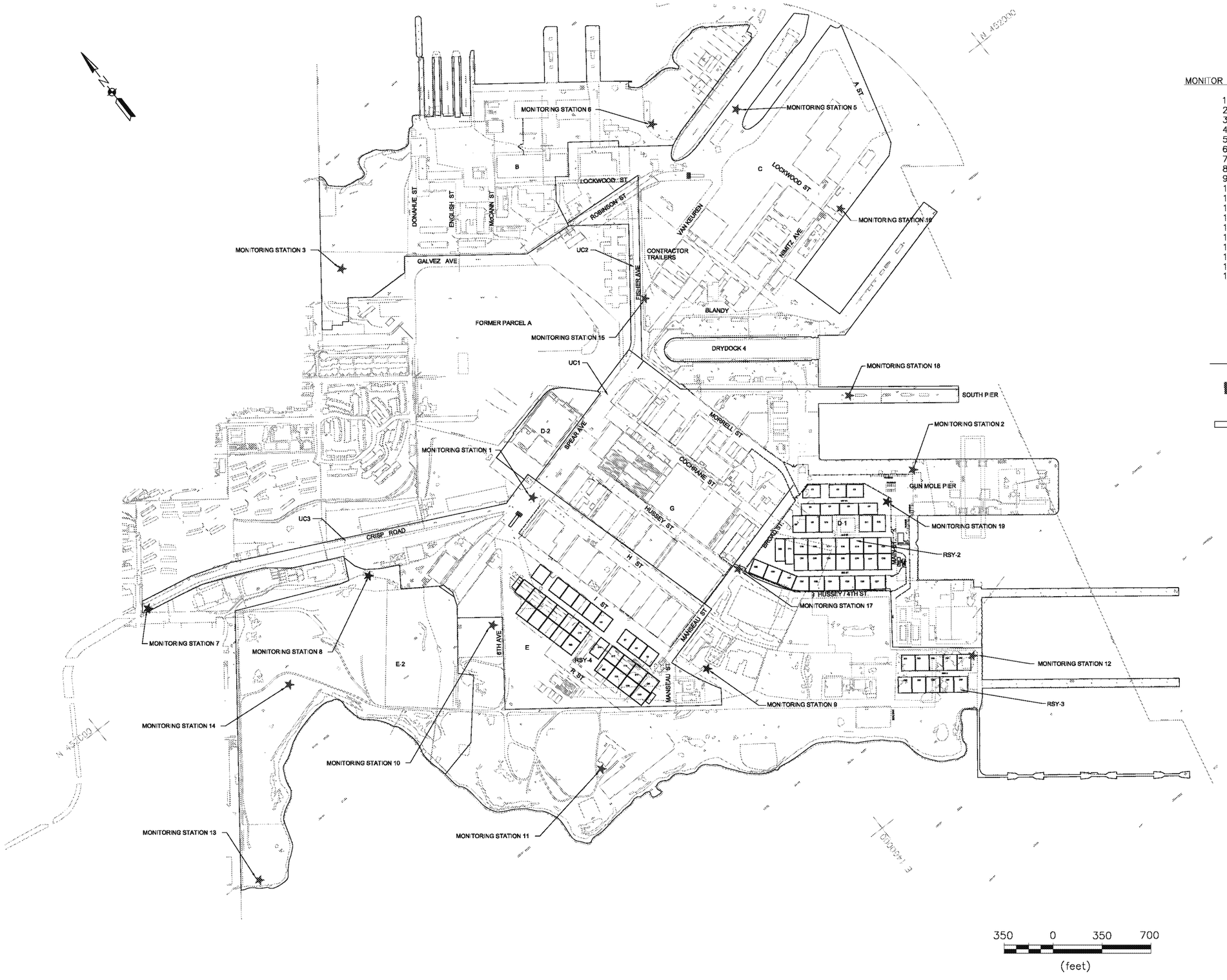

LEGEND

MONITOR STATION	LOCATION	IN USE
1	– PARCEL E–1	– NO
2	– PARCEL D	– NO
3	– PARCEL B	– NO
4	– NOT USED	– NO
5	– PARCEL C	– NO
6	– PARCEL B	– NO
7	– PARCEL E–1	– YES
8	– PARCEL E–1	– YES
9	– PARCEL E–1	– YES
10	– PARCEL E–1	– NO
11	– PARCEL E–1	– NO
12	– PARCEL E–1	– NO
13	– PARCEL E–2	– NO
14	– PARCEL E–2	– NO
15	– PARCEL G	– NO
16	– PARCEL C	– NO
17	– PARCEL D–1	– YES
18	– PARCEL D–1	– YES
19	– PARCEL D–1	– YES

MONITORING STATION LOCATION (TETRA TECH CONTROLLED)

MONITORING STATION LOCATION (NOT IN USE OR OPERATED BY OTHERS)

PARCEL BOUNDARY

LOCATION OF 10' X 16' RUMBLE STRIP

LOCATION OF 10' X 50' GRAVEL CLEAN–OUT PAD

BASE REALIGNMENT AND CLOSURE
PROGRAM MANAGEMENT OFFICE WEST
SAN DIEGO, CALIFORNIA

BASEWIDE DUST CONTROL PLAN

FIGURE 4-1

DUST CONTROL TRACK-OUT POINTS
AND AIR MONITORING LOCATIONS

HUNTERS POINT SHIPYARD, SAN FRANCISCO, CA

REVISION: 0
AUTHOR: A. CRABTREE
PROJECT NO:
FILE: SEE BELOW

TETRA TECH EC, INC.

\\Ecisfofile1\projects\CTO-02 CAD Files (Rad EMAC)\DWG Files\Execution Plans\404402-Fig 4-1a.dwg

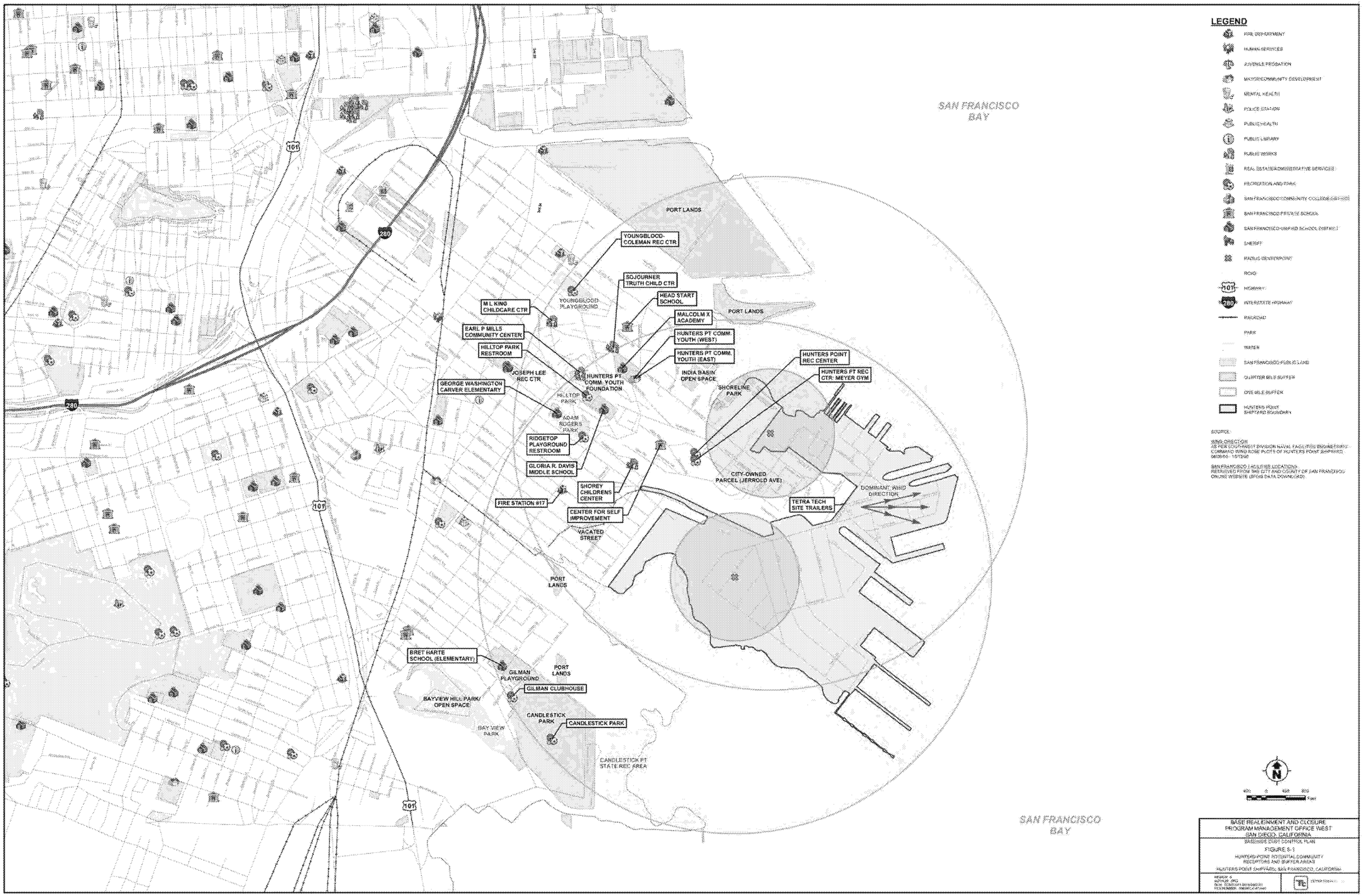

LEGEND
FIRE DEPARTMENT
HUMAN SERVICES
JUVENILE PROBATION
MAYOR/COMMUNITY DEVELOPMENT
MENTAL HEALTH
POLICE STATION
PUBLIC HEALTH
PUBLIC LIBRARY
PUBLIC WORKS
REAL ESTATE/ADMINISTRATIVE SERVICES
RECREATION AND PARK
SAN FRANCISCO COMMUNITY COLLEGE DISTRICT
SAN FRANCISCO PRIVATE SCHOOL
SAN FRANCISCO UNIFIED SCHOOL DISTRICT
SHERIFF
RADIUS CENTERPOINT
ROAD
HIGHWAY
INTERSTATE HIGHWAY
RAILROAD
PARK
WATER
SAN FRANCISCO PUBLIC LAND
QUARTER MILE BUFFER
ONE MILE BUFFER
HUNTERS POINT SHIPYARD BOUNDARY
SOURCE:
WIND DIRECTION
AS PER SOUTHWEST DIVISION NAVAL FACILITIES ENGINEERING COMMAND WIND ROSE PLOTS OF HUNTERS POINT SHIPYARD
SAN FRANCISCO FACILITIES LOCATIONS
RETRIEVED FROM THE CITY AND COUNTY OF SAN FRANCISCO ONLINE WEBSITE (SFGIS DATA DOWNLOAD)
SAN FRANCISCO BAY
PORT LANDS
YOUNGBLOOD-COLEMAN REC CTR
SOJOURNER TRUTH CHILD CTR
HEAD START SCHOOL
MALCOLM X ACADEMY
HUNTERS PT COMM. YOUTH (WEST)
HUNTERS PT COMM. YOUTH (EAST)
INDIA BASIN OPEN SPACE
HUNTERS POINT REC CENTER
HUNTERS PT REC CTR: MEYER GYM
SHORELINE PARK
M L KING CHILDCARE CTR
YOUNGBLOOD PLAYGROUND
EARL P MILLS COMMUNITY CENTER
HILLTOP PARK RESTROOM
JOSEPH LEE REC CTR
HUNTERS PT COMM. YOUTH FOUNDATION
GEORGE WASHINGTON CARVER ELEMENTARY
HILLTOP PARK
ADAM ROGERS PARK
RIDGETOP PLAYGROUND RESTROOM
GLORIA R. DAVIS MIDDLE SCHOOL
SHOREY CHILDRENS CENTER
FIRE STATION #17
CENTER FOR SELF IMPROVEMENT
VACATED STREET
CITY-OWNED PARCEL (JERROLD AVE)
TETRA TECH SITE TRAILERS
DOMINANT WIND DIRECTION
BRET HARTE SCHOOL (ELEMENTARY)
GILMAN PLAYGROUND
GILMAN CLUBHOUSE
BAYVIEW HILL PARK/ OPEN SPACE
CANDLESTICK PARK
BAY VIEW PARK
CANDLESTICK PT STATE REC AREA
101
280
N
BASE REALIGNMENT AND CLOSURE
PROGRAM MANAGEMENT OFFICE WEST
SAN DIEGO, CALIFORNIA
BASEWIDE DUST CONTROL PLAN
FIGURE 5-1
HUNTERS POINT POTENTIAL COMMUNITY RECEPTORS AND BUFFER AREAS
HUNTERS POINT SHIPYARD, SAN FRANCISCO, CALIFORNIA

Attachment B

Field Forms

PERSONAL AIR MONITORING CALIBRATION LOG

Prepared by: _____ Client: DON
Project Name: _____ Project No.: _____
Site Location: _____ Page: _____ of ___

Location	Date	Start Time	Flow at Start	Stop Time	Flow Rate at Stop	Name of employee

ARCADIS

Daily Log

Project No.: _____ Page _____ of _____

Site Location: _____

Prepared By: _____

Date	Time	Description of Activities

ARCADIS

Real Time Air Monitoring Data Collection Forms

Document all air monitoring conducted on the Site below based on Section E of the HASP. Keep this form with the project files.

Site Name: _____ Date: _____

Instrument: _____ Model: _____ Serial #: _____

Calibration Method: (material used, settings, etc.)	
Calibration Results:	
Calibrated By:	

Activity Being Monitored	Compounds Monitored	Time	Reading	Action Required? Y/N

Describe Any Actions Taken as a Result of this Air Monitoring and Why:

_____

_____

_____

_____

_____

Signed: _____

Site Safety Officer

Make additional copies of this form as necessary.

CHAIN OF CUSTODY

Curtis & Tompkins Laboratories
ENVIRONMENTAL ANALYTICAL TESTING LABORATORY
In Business Since 1878

2323 Fifth Street
Berkeley, CA 94710

Phone (510) 486-0900
Fax (510) 486-0532

Page ____ of ____

Chain of Custody # _____

C&T LOGIN # _____

Project No: _____ Sampler: _____

Project Name: _____ Report To: _____

EDD Format: _____ Report Level: ☐ II ☐ III ☐ IV Company : _____

Turnaround Time: ☐ RUSH _____ ☐ Standard Telephone: _____

Email: _____

Lab No.	Sample ID.	SAMPLING		MATRIX				PRESERVATIVE					ANALYTICAL REQUEST
		Date Collected	Time Collected	Water	Solid			HCl	H2SO4	HNO3	NaOH	None	

Notes:

SAMPLE RECEIPT
☐ Intact
☐ Cold
☐ On Ice
☐ Ambient

RELINQUISHED BY:	RECEIVED BY:
DATE: TIME:	DATE: TIME:
DATE: TIME:	DATE: TIME:
DATE: TIME:	DATE: TIME:

ENVIRONMENTAL SAMPLING SUPPLY

LOT#

SAMPLE ID

SAMPLED BY	DATE TIME
LOCATION	PRESERVATIVE
ANALYSIS	CLIENT

Oakland, CA • Houston, TX • Chicago, IL • Richmond, VA
(510) 465-4988 www.esservial.com (800) 233-8425

ENVIRONMENTAL SAMPLING SUPPLY

LOT#

SAMPLE ID

SAMPLED BY	DATE TIME
LOCATION	PRESERVATIVE
ANALYSIS	CLIENT

Oakland, CA • Houston, TX • Chicago, IL • Richmond, VA
(510) 465-4988 www.esservial.com (800) 233-8425

ENVIRONMENTAL SAMPLING SUPPLY

LOT#

SAMPLE ID

SAMPLED BY

LOCATION

ANALYSIS

Oakland, CA • Houston, TX
(510) 465-4988 www.es

ENVIRONMENTAL SAMPLING SUPPLY

LOT#

SAMPLE ID

SAMPLED BY	DATE TIME
LOCATION	PRESERVATIVE
ANALYSIS	CLIENT

Oakland, CA • Houston, TX • Chicago, IL • Richmond, VA
(510) 465-4988 www.esservial.com (800) 233-8425

ENVIRONMENTAL SAMPLING SUPPLY

LOT#

SAMPLE ID

SAMPLED BY	DATE TIME
LOCATION	PRESERVATIVE
ANALYSIS	CLIENT

Oakland, CA • Houston, TX • Chicago, IL • Richmond, VA
(510) 465-4988 www.esservial.com (800) 233-8425

ENVIRONMENTAL SAMPLING SUPPLY

LOT#

SAMPLE ID

SAMPLED BY

LOCATION

ANALYSIS

Oakland, CA • Houston, TX
(510) 465-4988 www.es

CUSTODY SEAL

ENVIRONMENTAL SAMPLING SUPPLY

9601 San Leandro St. Oakland, CA 800-233-8425

Date: .....

Signature: .....

CUSTODY SEAL

ENVIRONMENTAL SAMPLING SUPPLY

9601 San Leandro St. Oakland, CA 800-233-8425

Date: .....

Signature: .....

CUSTODY SEAL

ENVIRONMENTAL SAMPLING SUPPLY

9601 San Leandro St. Oakland, CA 800-233-8425

Date: .....

Signature: .....

ARCADIS

Document Control Number:TGM - _____

TGM + *project number plus date as follows: xxxxxxxx.xxxx.xxxxx - dd/mm/year*

TAILGATE HEALTH & SAFETY MEETING FORM

This form documents the tailgate meeting conducted in accordance with the Project HASP. Personnel who perform work operations on-site during the day are required to attend this meeting and to acknowledge their attendance, at least daily.

Project Name:			**Project Location:**
Date:	**Time:**	**Conducted by:**	**Signature/Title:**
Client:		**Client Contact:**	**Subcontractor companies:**

TRACKing the Tailgate Meeting

Think through the Tasks (list the tasks for the day):

1 _____ 3 _____ 5 _____

2 _____ 4 _____ 6 _____

Other Hazardous Activities - Check the box if there are any other ARCADIS, Client or other party activities that may pose hazards to ARCADIS operations ☐ If there are none, write "None" here: _____

If yes, describe them here: _____

How will they be controlled? _____

Prework Authorization - check activities to be conducted that require permit issuance or completion of a checklist or similar before work begins:

	Doc #		Doc #		Doc #
☐ Not applicable		☐ Working at Height		☐ Confined Space	
☐ Energy Isolation (LOTO)		☐ Excavation/Trenching		☐ Hot Work	
☐ Mechanical Lifting Ops		☐ Overhead & Buried Utilities		☐ Other permit	

Discuss following questions (for some review previous day's post activities). **Check if yes :**

		☐ Topics from Corp H&S to cover?
☐ Incidents from day before to review?	☐ Lessons learned from the day before?	☐ Any Stop Work Interventions yesterday?
☐ Any corrective actions from yesterday?	☐ Will any work deviate from plan?	☐ If deviations, notify PM & client
☐ JLAs or procedures are available?	☐ Field teams to "dirty" JLAs, as needed?	☐ All equipment checked & OK?
☐ Staff has appropriate PPE?	☐ Staff knows Emergency Plan (EAP)?	☐ Staff knows gathering points?

Comments: _____

Recognize the hazards (check all those that are discussed) (Examples are provided) and **Assess** the Risks (Low, Medium, High - circle risk level) - Provide an overall assessment of hazards to be encountered today and briefly list them under the hazard category.

☐ Gravity (i.e., ladder, scaffold, trips) (L M H)	☐ Motion (i.e., traffic, moving water) (L M H)	☐ Mechanical (i.e., augers, motors) (L M H)
☐ Electrical (i.e., utilities, lightning) (L M H)	☐ Pressure (i.e., gas cylinders, wells) (L M H)	☐ Environment (i.e., heat, cold, ice) (L M H)
☐ Chemical (i.e., fuel, acid, paint) (L M H)	☐ Biological (i.e., ticks, poison ivy) (L M H)	☐ Radiation (i.e., alpha, sun, laser) (L M H)
☐ Sound (i.e., machinery, generators) (L M H)	☐ Personal (i.e. alone, night, not fit) (L M H)	☐ Driving (i.e. car, ATV, boat, dozer) (L M H)

Continue TRACK Process on Page 2

TAILGATE HEALTH & SAFETY MEETING FORM - Pg. 2

Control the hazards (Check all and discuss those methods to control the hazards that will be implemented for the day): Review the HASP, applicable JLAs, and other control processes. Discuss and document any additional control processes.

☒ **STOP WORK AUTHORITY** (Must be addressed in every Tailgate meeting - (*See statements below*)

☐	Elimination	☐	Substitution	☐	Isolation
☐	Engineering controls	☐	Administrative controls	☐	Monitoring
☐	General PPE Usage	☐	Hearing Conservation	☐	Respiratory Protection
☐	Personal Hygiene	☐	Exposure Guidelines	☐	Decon Procedures
☐	Emergency Action Plan (EAP)	☐	Fall Protection	☐	Work Zones/Site Control
☐	JLA to be developed/used ***(specify)***	☐	LPO conducted ***(specify job/JLA)***	☐	Traffic Control
☐		☐		☐	Other ***(specify)***
☐		☐		☐	

Signature and Certification Section - Site Staff and Visitors

Name/Company/Signature	Initial & Sign in Time	Initial & Sign out Time	I have read and understand the HASP

Important Information and Numbers

All site staff should arrive fit for work. If not, they should report to the supervisor any restrictions or concerns.

In the event of an injury, employees will call WorkCare at 1.800.455.6155 and then notify the field supervisor who will, in turn, notify Corp H&S at 1.720.344.3844.

In the event of a motor vehicle accident, employees will notify the field supervisor who will then notify Corp H&S at 1.720.344.3844 and then Corp Legal at 1.720.344.3756.

In the event of a utility strike or other damage to property of a client or 3rd party, employees will immediately notify the field supervisor, who will then immediately notify Corp Legal at 1.678.373.9556 and Corp H&S at 1.720.344.3500

Visitor Name/Co - not involved in work

In Out

In Out

In Out

In Out

I will STOP the job any time anyone is concerned or uncertain about health & safety or if anyone identifies a hazard or additional mitigation not recorded in the site, project, job or task hazard assessment.

I will be alert to any changes in personnel, conditions at the work site or hazards not covered by the original hazard assessments.

If it is necessary to **STOP THE JOB,** I will perform **TRACK**; and then amend the hazard assessments or the HASP as needed.

I will not assist a subcontractor or other party with their work unless it is absolutely necessary and then only after I have done TRACK and I have thoroughly controlled the hazard.

Post Daily Activities Review - Review at end of day or before next day's work (Check those applicable and explain:)

☐ Lessons learned and best practices learned today: _____

☐ Incidents that occurred today: _____

☐ Any Stop Work interventions today? _____

☐ Corrective/Preventive Actions needed for future work: _____

☐ Any other H&S issues: _____

Keep H&S 1st in all things

WorkCare - 1.800.455.6155
Near Loss Hotline - 1.866.242.4304

Utilities and Structures Checklist

Project: _____
Project Number: _____
Date: _____
Work locations applicable to this clearance checklist:

Pre-Field Work

One Call or "811" notified 48-72 hours in advance of work? ☐ Yes ☐ No
Utility companies notified during the One Call process ☐ See attached ticket

List any other utilities requiring notification: ☐ None

Client provided utility maps or "as built" drawings showing utilities? ☐ Yes ☐ No

Field Work

Markings present: ☐ Paint ☐ Pin flags/stakes ☐ Other ☐ None

Subsurface Utility Lines of Evidence Used (3 Minimum):

- ☐ One Call/"811"
- ☐ Client Provided Maps/Drawings
- ☐ Client Clearance
- ☐ Interviews: Name(s)/Affiliation(s) _____

Did persons interviewed indicate depths of any utilities in the subsurface?
☐ Yes, depths provided:

☐ Did not know or refused to answer

Comments:

- ☑ Site Inspection
- ☐ GPR
- ☐ Air-Knife
- ☐ Hydro-Knife
- ☐ Public Records/Maps
- ☐ Radiofrequency
- ☐ Metal Detector
- ☐ Handauger
- ☐ Potholing
- ☐ Probing
- ☐ Private Locator: Name and Company: _____
- ☐ Marine Locator: Name and Company: _____
- ☐ Other:

Tips for Successful Utility Location:
1. No excessive turning or downward force of handaugers/shovels, etc.
2. No hammering- no pickaxes-no digging bars-no hurrying or shortcutting
3. Select alternate/backup locations for clearance
4. Utilities may run directly under asphalt/concrete or be > 5 ft depth
5. Be on site when utilizing private utility locators

TRACK

Site Inspection

During inspections look for the following ("YES" requires follow up investigation):

		Utility color codes		
a)	Natural gas line present (evidence of a gas meter)?	Yellow	☐ Yes	☐ No
b)	Evidence of subsurface electric lines :	Red		
	i) Conduits to ground from electric meter?		☐ Yes	☐ No
	ii) Overhead electric lines absent		☐ Yes	☐ No
	iii) Light poles, electric devices with no overhead lines?		☐ Yes	☐ No
c)	Evidence of water lines:	Blue		
	i) Water meter on site?		☐ Yes	☐ No
	ii) Fire hydrants in vicinity of work?		☐ Yes	☐ No
	iii) Irrigation systems?		☐ Yes	☐ No
d)	Evidence of sewers or storm drains:	Green		
	i) Restrooms or kitchen on site?		☐ Yes	☐ No
	ii) Gutter down spouts going into ground		☐ Yes	☐ No
	iii) Grates in ground in work area		☐ Yes	☐ No
e)	Evidence of telecommunication lines:	Orange		
	i) Fiber optic warning signs in areas?		☐ Yes	☐ No
	ii) Lines from cable boxes running into ground?		☐ Yes	☐ No
	iii) Conduits from power poles running into ground?		☐ Yes	☐ No
	iv) Aboveground boxes or housings in work area?		☐ Yes	☐ No
f)	Underground storage tanks:			
	i) Tank pit present?		☐ Yes	☐ No
	ii) Product lines running to dispensers/buildings?		☐ Yes	☐ No
	iii) Vent present away from tank pit?		☐ Yes	☐ No
g)	Proposed excavation markings in work area?	White	☐ Yes	☐ No
h)	Other:			
	i) Evidence of linear asphalt or concrete repair		☐ Yes	☐ No
	ii) Evidence of linear ground subsidence or change in vegetation?		☐ Yes	☐ No
	iii) Manholes or valve covers in work area?		☐ Yes	☐ No
	iv) Warning signs ("Call Before you Dig", etc) on or adjacent to site?		☐ Yes	☐ No
	v) Utility color markings not illustrated in this checklist?		☐ Yes	☐ No
i)	Aboveground lines in or near the work area:			
	i) < 50 kV within 10 ft of work area?		☐ Yes	☐ No
	ii) >50 - 200 kV within 15 ft of work area?		☐ Yes	☐ No
	iii) >200-350 kV within 20 ft of work area?		☐ Yes	☐ No
	iv) >350-500 kV within 25 ft of work area?		☐ Yes	☐ No
	v) >500-750 kV within 35 ft or work area?		☐ Yes	☐ No
	vi) >750-1000 kV within 45 ft of work area?		☐ Yes	☐ No

Comments:

Do not initiate intrusive work if utilities are suspected to be present in area and are not located, markings are over 14 days old, or if clearance methods provide incomplete or conflicting information. Do not perform intrusive work within 30 inches of a utility marking without hand clearing.

Name and signature of person completing the checklist:

Name: _____

Signature: _____

Date: _____

Attachment C

Standard Operating Procedures

BUSINESS CONFIDENTIAL INFORMATION

DO NOT COPY

DO NOT DISTRIBUTE

Electronic Document Cover

The electronic copy of this document, as maintained on the TestAmerica Richland computer network, is the controlled copy. Any printed copy becomes uncontrolled, and all work performed should ultimately reference the controlled electronic version.

Any printed or electronic copy of this document that is distributed external to TestAmerica Richland becomes uncontrolled.

This document has been reviewed/revised on the following dates:

4/30/2010	6/9/2011			

Quality Assurance Manual

TestAmerica Richland
2800 George Washington Way
Richland, WA 99354
Phone No. 509-375-3131 Fax No. 509-375-5590
www.testamericainc.com

Hardcopy versions of this document are considered uncontrolled unless otherwise specified by the Quality Assurance Department.

Laboratory Director – Jodie Carnes	Date 6/7/11
Quality Manager - Sarah Nagel	Date 6/07/2011
Technical Manager, (Radiochemistry) – Matt Lardy	Date 6/9/2011
Technical Manager, (Radiochemistry/Metals) – Steve Wheland	Date 6/8/2011

Copyright Information:
This documentation has been prepared by TestAmerica Analytical Laboratories Inc. and its affiliates ("TestAmerica"), solely for their own use and the use of their customers in evaluating their qualifications and capabilities in connection with a particular project. The user of this document agrees by its acceptance to return it to TestAmerica upon request and not to reproduce, copy, lend, or otherwise disclose its contents, directly or indirectly, and not to use if for any other purpose other than that for which it was specifically provided. The user also agrees that where consultants or other outside parties are involved in the evaluation process, access to these documents shall not be given to said parties unless those parties also specifically agree to these conditions.

THIS DOCUMENT CONTAINS VALUABLE CONFIDENTIAL AND PROPRIETARY INFORMATION. DISCLOSURE, USE OR REPRODUCTION OF THESE MATERIALS WITHOUT THE WRITTEN AUTHORIZATION OF TESTAMERICA IS STRICTLY PROHIBITED. THIS UNPUBLISHED WORK BY TESTAMERICA IS PROTECTED BY STATE AND FEDERAL LAW OF THE UNITED STATES. IF PUBLICATION OF THIS WORK SHOULD OCCUR THE FOLLOWING NOTICE SHALL APPLY:
©COPYRIGHT 2011 TESTAMERICA LABORATORIES, INC. ALL RIGHTS RESERVED.

Facility Distribution No. _____ **Distributed To:_____**

Title Page:

Quality Assurance Manual
Approval Signatures

See Cover Page

Company Confidential & Proprietary

SECTION 2
TABLE OF CONTENTS

Section No.	Title	ISO/IEC 17025:2005 Reference	Page No.	Effective Date
-	COVER PAGE		COVER	6/09/2011
1.0	TITLE PAGE		1-1	6/09/2011
2.0	TABLE OF CONTENTS		2-1	6/09/2011
3.0	INTRODUCTION *(NELAC 5.1 – 5.3)*		3-1	6/09/2011
3.1	Introduction and Compliance References	4.1.2; 4.2.4	3-1	6/09/2011
3.2	Terms and Definitions	4.2.4	3-1	6/09/2011
3.3	Scope / Fields of Testing	4.1.2; 4.2.4	3-2	6/09/2011
3.4	Management of the Manual	4.2.1; 4.2.7; 4.3.3.2; 4.3.3.3	3-2	6/09/2011
4.0	ORGANIZATION AND MANAGEMENT (NELAC 5.4.1)		4-1	6/09/2011
4.1	Overview	4.1.1; 4.1.3; 4.1.5; 4.2.Z2	4-1	6/09/2011
4.2	Roles and Responsibilities	4.1.3; 4.1.5; 4.1.Z1; 4.1.6; 4.2.1; 4.2.Z2; 4.2.6; 5.2.4	4-1	6/09/2011
4.3	Deputies	4.1.5; 4.2.Z2	4-7	6/09/2011
5.0	QUALITY SYSTEM *(NELAC 5.4.2)*		5-1	6/09/2011
5.1	Quality Policy Statement	4.1.5; 4.2.2; 4.2.3	5-1	6/09/2011
5.2	Ethics and Data Integrity	4.1.5; 4.2.2	5-1	6/09/2011
5.3	Quality System Documentation	4.2.2; 4.2.5	5-2	6/09/2011
5.4	QA/QC Objectives for the Measurement of Data	4.1.5; 4.2.2	5-3	6/09/2011
5.5	Criteria for Quality Indicators		5-5	6/09/2011
5.6	Quality Systems Metrics		5-5	6/09/2011
6.0	DOCUMENT CONTROL *(NELAC 5.4.3)*	4.2.7; 4.3.1; 4.3.2.2; 4.3.3.3; 4.3.3.4	6-1	6/09/2011
6.1	Overview		6-1	6/09/2011
6.2	Document Approval And Issue	4.3.2.1; 4.3.2.2; 4.3.2.3; 4.3.3.1	6-1	6/09/2011
6.3	Procedures For Document Control Policy	4.3.2.1; 4.3.2.2; 4.3.3.1	6-2	6/09/2011
6.4	Obsolete Documents	4.3.2.1; 4.3.2.2	6-3	6/09/2011
7.0	SERVICE TO THE CLIENT *(NELAC 5.4.7)*	4.4.1; 4.4.2; 4.4.3; 4.4.4	7-1	6/09/2011
7.1	Overview	4.4.5; 5.7.1	7-1	6/09/2011
7.2	Review Sequence And Key Personnel	4.4.5	7-2	6/09/2011
7.3	Documentation	5.7.1	7-2	6/09/2011
7.4	Special Services	4.7.1; 4.7.2	7-3	6/09/2011
7.5	Client Communication	4.7.1; 4.7.2	7-4	6/09/2011
7.6	Reporting	4.7.1; 4.7.2	7-4	6/09/2011
7.7	Client Surveys	4.7.1; 4.7.2	7-4	6/09/2011
8.0	SUBCONTRACTING OF TESTS *(NELAC 5.4.5)*	4.4.3; 4.5.4	8-1	6/09/2011
8.1	Overview	4.5.1; 4.5.2; 4.5.3; 5.3.1	8-1	6/09/2011
8.2	Qualifying and Monitoring Subcontractors	4.5.1; 4.5.2; 4.5.3	8-1	6/09/2011
8.3	Oversight and Reporting		8-3	6/09/2011
8.4	Contingency Planning		8-3	6/09/2011
9.0	PURCHASING SERVICES AND SUPPLIES *(NELAC 5.4.6)*	4.6.1	9-1	6/09/2011
9.1	Overview	4.6.2; 4.6.3; 4.6.4	9-1	6/09/2011
9.2	Glassware		9-1	6/09/2011
9.3	Reagents, Standards & Supplies	4.6.2; 4.6.3; 4.6.4	9-1	6/09/2011
9.4	Purchase of Equipment/Instruments/Software		9-4	6/09/2011
9.5	Services		9-4	6/09/2011

Section No.	Title	ISO/IEC 17025:2005 Reference	Page No.	Effective Date
9.6	Suppliers		9-4	6/09/2011
10.0	COMPLAINTS *(NELAC 5.4.8)*	4.8	10-1	6/09/2011
10.1	Overview		10-1	6/09/2011
10.2	External Complaints		10-1	6/09/2011
10.3	Internal Complaints		10-1	6/09/2011
10.4	Management Review		10-1	6/09/2011
11.0	CONTROL OF NON-CONFORMING WORK *(NELAC 5.4.9)*	4.9.1; 5.10.Z.10	11-1	6/09/2011
11.1	Overview	4.9.1; 4.11.3; 4.11.5	11-1	6/09/2011
11.2	Responsibilities and Authorities	4.9.1; 4.11.3; 4.11.5	11-1	6/09/2011
11.3	Evaluation of Significance and Action Taken	4.9.1; 4.11.3; 4.11.5	11-2	6/09/2011
11.4	Prevention of Nonconforming Work	4.9.2; 4.11.2	11-2	6/09/2011
11.5	Method Suspension/Restriction (Stop Work Procedures)	4.9.1; 4.9.2; 4.11.5	11-2	6/09/2011
12.0	CORRECTIVE ACTION *(NELAC 5.4.10)*		12-1	6/09/2011
12.1	Overview	4.9.2; 4.11.1; 4.11.2	12-1	6/09/2011
12.2	General	4.11.2; 4.11.3	12-1	6/09/2011
12.3	Closed Loop Corrective Action Process	4.11.2; 4.11.3; 4.11.4; 4.12.2	12-1	6/09/2011
12.4	Technical Corrective Actions		12-3	6/09/2011
12.5	Basic Corrections	4.11.1; 4.13.2.3	12-5	6/09/2011
13.0	PREVENTIVE ACTION *(NELAC 5.4.11)*	4.10; 4.12.1; 4.12.2	13-1	6/09/2011
13.1	Overview	4.15.1; 4.15.2	13-1	6/09/2011
14.0	CONTROL OF RECORDS *(NELAC 5.4.12)*	4.2.7; 4.13.1.1	14-1	6/09/2011
14.1	Overview	4.13.1.1; 4.13.1.2; 4.13.1.3; 4.13.1.4; 4.13.2.1; 4.13.2.2; 4.13.2.3	14-1	6/09/2011
14.2	Technical And Analytical Records	4.13.2.2; 4.13.2.3	14-3	6/09/2011
14.3	Laboratory Support Activities		14-4	6/09/2011
14.4	Administrative Records		14-5	6/09/2011
14.5	Records Management, Storage and Disposal		14-5	6/09/2011
15.0	AUDITS *(NELAC 5.4.13)*		15-1	6/09/2011
15.1	Internal Audits	4.14.1; 4.14.2; 4.14.3; 5.9.1; 5.9.A.15	15-1	6/09/2011
15.2	External Audits	4.14.2; 4.14.3; 4.14.4	15-3	6/09/2011
15.3	Audit Findings		15-3	6/09/2011
16.0	MANAGEMENT REVIEWS *(NELAC 5.4.14)*	4.1.6; 4.15.1; 4.15.2	16-1	6/09/2011
16.1	Quality Assurance Report		16-1	6/09/2011
16.2	Annual Management Review	4.2.2	16-1	6/09/2011
16.3	Potential Integrity Related Managerial Reviews		16-2	6/09/2011
17.0	PERSONNEL *(NELAC 5.5.2)*	5.2.1	17-1	6/09/2011
17.1	Overview	5.2.2; 5.2.3; 5.2.5	17-1	6/09/2011
17.2	Education and Experience Requirements for Technical Personnel	5.2.1; 5.2.3; 5.2.4	17-1	6/09/2011
17.3	Training	5.2.5	17-2	6/09/2011
17.4	Data Integrity and Ethics Training Program		17-4	6/09/2011
18.0	ACCOMMODATIONS AND ENVIRONMENTAL CONDITIONS *(NELAC 5.5.3)*		18-1	6/09/2011
18.1	Overview	5.3.1; 5.3.3; 5.3.4; 5.3.5	18-1	6/09/2011
18.2	Environment	5.3.1; 5.3.2; 5.3.3; 5.3.4; 5.3.5	18-1	6/09/2011

Section No.	Title	ISO/IEC 17025:2005 Reference	Page No.	Effective Date
18.3	Work Areas	5.3.3; 5.3.4; 5.3.5	18-1	6/09/2011
18.4	Floor Plan		18-2	6/09/2011
18.5	Building Security	5.3.4	18-2	6/09/2011
19.0	TEST METHODS AND METHOD VALIDATION *(NELAC 5.5.4)*	5.4.1	19-1	6/09/2011
19.1	Overview	5.4.1; 5.4.5.1	19-1	6/09/2011
19.2	Standard Operating Procedures	4.3.3.1; 5.4.2	19-1	6/09/2011
19.3	Laboratory Methods Manual		19-1	6/09/2011
19.4	Selection Of Methods	5.4.1; 5.4.2; 5.4.3; 5.4.4; 5.4.5.1; 5.4.5.2; 5.4.5.3	19-2	6/09/2011
19.5	Laboratory Developed Methods And Non-Standard Methods	5.4.2; 5.4.4; 5.4.5.2; 5.4.5.3; 5.4.Z.3	19-4	6/09/2011
19.6	Validation Of Methods	5.4.2; 5.4.4; 5.4.5.2; 5.4.5.3; 5.4.Z.3	19-4	6/09/2011
19.7	Method Detection Limits/Limit of Detection	5.4.Z.3	19-6	6/09/2011
19.8	Verification of Detection and Reporting Limits		19-6	6/09/2011
19.9	Estimation of Uncertainty of Measurement	5.1.1; 5.1.2; 5.4.6.1; 5.4.6.2; 5.4.6.3; 5.4.Z.4	19-6	6/09/2011
19.10	Control Of Data	5.4.7.1; 5.4.7.2; 5.9.1;	19- 7	6/09/2011
20.0	EQUIPMENT (AND CALIBRATIONS) *(NELAC 5.5.5)*	5.5.4; 5.5.5; 5.5.Z.5; 5.5.6; 5.5.Z.6	20-1	6/09/2011
20.1	Overview	5.5.1; 5.5.2; 5.5.3; 5.5.5; 5.5.10; 5.6.1; 5.6.Z.8	20-1	6/09/2011
20.3	Preventive Maintenance	5.5.1; 5.5.3; 5.5.7; 5.5.9; 5.6.1; 5.6.Z.8	20-1	6/09/2011
20.4	Support Equipment	5.5.10; 5.5.11; 5.6.2.1.2; 5.6.2.2.1; 5.6.2.2.2	20-2	6/09/2011
20.5	Instrument Calibrations	5.5.8; 5.5.Z.6; 5.5.10; 5.6.1; 5.6.Z.8; 5.6.3.1	20-4	6/09/2011
21.0	MEASUREMENT TRACEABILITY *(NELAC 5.5.6)*		21-1	6/09/2011
21.1	Overview	5.6.2.1.2; 5.6.2.2.2; 5.6.3.1	21-1	6/09/2011
21.2	NIST Traceable Weights and Thermometers	5.6.3.1; 5.6.3.2	21-1	6/09/2011
21.3	Reference Standards / Materials	5.6.3.1; 5.6.3.2; 5.6.3.3; 5.6.3.4; 5.9.1	21-1	6/09/2011
21.4	Documentation And Labeling Of Standards, Reagents, And Reference Materials		21-2	6/09/2011
22.0	SAMPLING *(NELAC 5.5.7)*		22-1	6/09/2011
22.1	Overview	5.7.1; 5.7.3	22-1	6/09/2011
22.2	Sampling Containers		22-1	6/09/2011
22.3	Sampling Containers, Preservation Requirements, Holding Times		22-1	6/09/2011
22.4	Sample Aliquots / Subsampling	5.7.1	22-1	6/09/2011
23.0	HANDLING OF SAMPLES *(NELAC 5.5.8)*	5.8.1	23-1	6/09/2011
23.1	Chain Of Custody	5.7.2; 5.8.4; 5.9.1	23-1	6/09/2011
23.2	Sample Receipt	5.8.2; 5.8.3	23-2	6/09/2011
23.3	Sample Acceptance Policy		23-3	6/09/2011
23.4	Sample Storage and Tracking	5.8.4	23-4	6/09/2011

Section No.	Title	ISO/IEC 17025:2005 Reference	Page No.	Effective Date
23.5	Laboratory Internal Tracking		23-4	6/09/2011
23.6	Hazardous Samples And Foreign Soils		23-5	6/09/2011
23.7	Sample Shipping	5.8.2	23-5	6/09/2011
23.8	Sample Disposal		23-5	6/09/2011
24.0	ASSURING THE QUALITY OF TEST RESULTS *(NELAC 5.5.9)*		24-1	6/09/2011
24.1	Overview	5.9.2	24-1	6/09/2011
24.2	Controls	5.9.2	24-1	6/09/2011
24.3	Negative Controls	5.9.2	24-1	6/09/2011
24.4	Positive Controls	5.9.2	24-2	6/09/2011
24.5	Sample Matrix Controls	5.9.2	24-2	6/09/2011
24.6	Acceptance Criteria (Control Limits)		24-3	6/09/2011
25.0	REPORTING RESULTS *(NELAC 5.5.10)*		25-1	6/09/2011
25.1	Overview	5.10.1; 5.10.2; 5.10.8	25-1	6/09/2011
25.2	Test Reports	5.10.1; 5.10.2; 5.10.3.1; 5.10.3.2; 5.10.5; 5.10.6; 5.10.7; 5.10.8	25-1	6/09/2011
25.3	Reporting Level Or Report Type	5.10.1; 5.10.7; 5.10.8	25-3	6/09/2011
25.4	Supplemental Information For Test	5.10.1; 5.10.3.1; 5.10.5	25-4	6/09/2011
24.5	Environmental Testing Obtained from Subcontractors	5.10.1; 5.10.6	25-4	6/09/2011
25.6	Client Confidentiality	4.1.5; 5.10.7	25-4	6/09/2011
25.7	Format Of Reports	5.10.8	25-5	6/09/2011
25.8	Amendments To Test Reports	5.10.9; 5.10.Z.10	25-5	6/09/2011
25.9	Policies On Client Requests For Amendments	5.9.1; 5.10.Z.10	25-5	6/09/2011
25.10	Client Specific Periodic Reports		25-5	6/09/2011

Company Confidential & Proprietary

LIST OF TABLES

Table No.	Title	ISO/IEC 17025:2005 Reference	Page	Effective Date
12-1	Example - General Corrective Action Procedures	4.11.2; 4.13.2.3	12-4	6/09/2011
14-1	Example - Record Index	4.13.1.1	14-1	6/09/2011
14-2	Example - Special Record Retention Requirements		14-2	6/09/2011
15-1	Audit Types and Frequency	4.14.1	15-1	6/09/2011
20-1	Example - Lab Instrumentation	5.5.4; 5.5.5	20-8	6/09/2011
20-2	Example - Schedule of Routine Maintenance		20-9	6/09/2011

LIST OF FIGURES

Figure No.	Title	ISO/IEC 17025:2005 Reference	Page	Effective Date
4-1	Example - Corporate and Laboratory Organization Chart	4.1.3; 4.1.5; 4.2.Z2	4-7	6/09/2011
8-1	Example - Subcontracted Sample Form		8-4	6/09/2011
19-1	Example - Demonstration of Capability Documentation		19-11	6/09/2011
23-1	Example: Chain of Custody Form		23-6	6/09/2011
23-2	Sample Acceptance Policy		23-7	6/09/2011

LIST OF APPENDICES

Appendix No.	Title	Page	Effective Date
1	Laboratory Floor Plan	Appendix 1-1	6/09/2011
2	Glossary / Acronyms	Appendix 2-1	6/09/2011
3	Laboratory Certifications, Accreditations, Validations	Appendix 3-1	6/09/2011
4	Correlation of TestAmerica Quality Program with US DOE QSAS	Appendix 4-1	6/09/2011
5	Laboratory Standard Operating Procedures	Appendix 5-1	6/09/2011

Company Confidential & Proprietary

LABORATORY SOPs REFERENCED IN THIS MANUAL

For a complete list of laboratory SOPs, please refer to Appendix 5.

SOP Reference	Title and Section
RL-QA-002	Nonconformance and Corrective Action System, Sec. 12.2
RL-IT-001	Software Quality Assurance, Sec. 19.8.1
RL-DR-002	Logbook Maintenance and Review, Sec 19.8.2
RL-SRV-001	Receiving and Login of Samples by Sample Control
RL-SRV-002	Temperature Monitoring of Sample Refrigerators, Sec 20.3.3
RL-SE-001	Pipet Calibration Check, Sec 20.3.4
RL-RS-001	Guidelines for Radiation and Contamination Surveys, Sec 20.4.5.1
RL-RPL-001	Reagent and Non-Radioactive Standard Labeling, Sec 21.4.1
RL-HS-006	Disposal/Return of Completed Samples, Sec 23.6
RL-DR-001	Review of Environmental and Bioassay Data, Sec 24.5.1.3

Company Confidential & Proprietary

REFERENCED CORPORATE SOPs AND POLICIES

SOP/Policy Reference	Title
CA-Q-S-001	Solvent and Acid Lot Testing and Approval
CA-Q-S-002	Acceptable Manual Integration Practices
CA-Q-S-004	Method Compliance & Data Authenticity Audits
CA-Q-S-006	Detection Limits
CA-Q-S-008	Management Systems Review
CW-Q-S-001	Corporate Document Control and Archiving
CW-Q-S-002	Writing a Standard Operating Procedure
CA-L-S-001	Internal Investigation of Potential Data Discrepancies and Determination for Data Recall
CA-L-S-002	Subcontracting Procedures
CA-L-P-001	Ethics Policy
CA-L-P-002	Contract Compliance Policy
CW-F-P-002	Authorization Matrix
CW-F-P-004	Procurement and Contracts Policy
CA-C-S-001	Work Sharing Process
CA-T-P-001	Qualified Products List
CW-F-S-004	Controlled Purchases Policy
CW-F-S-018	Vendor Selection
CA-Q-M-002	Corporate Quality Management Plan
CW-E-M-001	Corporate Environmental Health & Safety Manual

SECTION 3
INTRODUCTION
(NELAC 5.1 - 5.3)

3.1 INTRODUCTION AND COMPLIANCE REFERENCES

TestAmerica Richland's Quality Assurance (QA) Manual is a document prepared to define the overall policies, organization objectives and functional responsibilities for achieving TestAmerica's data quality goals. The laboratory maintains a local perspective in its scope of services and client relations and maintains a national perspective in terms of quality.

The QA Manual (QAM) has been prepared to assure compliance with the *U. S. Department of Energy (DOE), Quality Systems for Analytical Services*, (QSAS, current revision); U. S. Department of Defense (DoD), Quality Systems Manual (QSM, version 4.1); National Environmental Laboratory Accreditation Conference (NELAC) Standards (2003); and the International Organization for Standardization ISO/IEC Guide 17025 (2005). In addition, the policies and procedures outlined in this manual are compliant with the various accreditation and certification programs listed in Appendix 3. The relevant NELAC section is included in the heading of each QAM section.

The QAM has been prepared to be consistent with the requirements of the following documents:

- HASQARD, *Hanford Analytical Services Quality Assurance Requirement Documents.* Project Hanford Management Contractor, current revision.
- EPA 600/4-79-019, *Handbook for Analytical Quality Control in Water and Wastewater Laboratories, U. S.* Environmental Protection Agency, March 1979.
- EPA SW-846, *Test Methods for the Evaluation of Solid Waste, U. S.* Environmental Protection Agency, *3rd Edition,* September 1986; Update I, July 1992; Update II, September 1994; and Update III, December 1996.
- DOE-STD-1112-98, *The Department of Energy Laboratory Accreditation Program for Radiobioassay*, Dec. 1998.
- *U.S. Department of Energy* Order 414.1, *Quality Assurance*, current revision.
- *U.S. Department Of Defense, Quality Systems Manual for Environmental Laboratories, Version 4.1*, April 2009.
- AIHA LQAP Policy Document, current revision.
- Nuclear Regulatory Commission (NRC) quality assurance requirements.
- ASTM D7282-06, Standard Practice for Set-up, Calibration, and Quality Control of Instruments Used for Radioactivity Measurements, American Society for Testing & Materials, current revision.
- Nureg-1576, Multi-Agency Radiological Laboratory Analytical Protocols Manual (MARLAP) *U. S.* Environmental Protection Agency.
- HPS-N13.30-1996, "Performance Criteria for Radiobioassay" Health Physics Society, An American National Standard
- ANSI N42.23, Measurement and Associated Instrumentation Quality Assurance for Radioassay Laboratories, 1996.

3.2 TERMS AND DEFINITIONS

A Quality Assurance Program is a company-wide system designed to ensure that data produced by the laboratory conforms to the standards set by state and/or federal regulations. The program functions at the management level through company goals and management policies, and at the analytical level through Standard Operating Procedures (SOPs) and quality control (QC). The TestAmerica program is designed to

minimize systematic error, encourage constructive, documented problem solving, and provide a framework for continuous improvement within the organization.

Refer to Appendix 2 for the Glossary and Acronyms.

3.3 SCOPE / FIELDS OF TESTING

The laboratory analyzes a broad range of environmental and industrial samples every month. Sample matrices vary among air, drinking water, effluent water, groundwater, hazardous waste, sludge, filters, soils, food products, animal tissue, vegetation, D&D material, bioassay (urine and feces). The Quality Assurance Program contains specific procedures and methods to test samples of differing matrices. The Program also contains guidelines on maintaining documentation of analytical process, reviewing results, servicing clients and tracking samples through the laboratory. The technical and service requirements of all requests to provide analyses are thoroughly evaluated before commitments are made to accept the work. Measurements are made using published reference methods or methods developed and validated by the laboratory.

The specific list of test methods used by the laboratory can be found in the QA files. The approach of this manual is to define the minimum level of QA and QC necessary to meet requirements. All methods performed by the laboratory shall meet these criteria as appropriate. In some instances, quality assurance project plans (QAPP), project specific data quality objectives (DQO) or local regulations may require criteria other than those contained in this manual. In these cases, the laboratory will abide by the requested criteria following review and acceptance of the requirements by the Laboratory Director and the Quality Assurance Manager. In some cases, QAPPs and DQOs may specify less stringent requirements. The Laboratory Director and the QA Manager must determine if it is in the lab's best interest to follow the less stringent requirements.

3.4 MANAGEMENT OF THE MANUAL

3.4.1 Review Process

This manual is reviewed annually by the QA Manager and laboratory personnel to assure that it reflects current practices and meets the requirements of the laboratory's clients and regulators as well as the CQMP. Occasionally, the manual may need changes in order to meet new or changing regulations and operations. The QA Manager will review the changes in the normal course of business and incorporate changes into revised sections of the document. The updates will be reviewed by the QA Manager, Laboratory Director, Technical Manager(s) and relevant operational staff and then formally incorporated into the document in periodic updates. Pencil changes to this manual pending document update are not authorized for this laboratory.

The QA Manager controls distribution of this manual by posting the current approved version in the laboratory SOP database in electronic PDF format. Employees sign a form indicating they have read and understand the contents. This form is filed in QA. Hardcopies, unless otherwise specified, are uncontrolled. When an approved revision of a TestAmerica Richland controlled document is ready for distribution, obsolete copies of the document are replaced with the current version of the document. The previous revision of the controlled document is archived by the QA Department.

SECTION 4
ORGANIZATION AND MANAGEMENT
(NELAC 5.4.1)

4.1 OVERVIEW

TestAmerica Richland is a local operating unit of TestAmerica Laboratories, Inc. The organizational structure, responsibilities and authorities of the corporate staff of TestAmerica Laboratories, Inc. are presented in the CQMP. TestAmerica Richland has day-to-day independent operational authority overseen by corporate officers (e.g. President, Chief Operating Officer, Corporate Quality Assurance, etc). The TestAmerica Richland laboratory operational and support staff work under the direction of the Laboratory Director. Current laboratory organization structure is maintained in QA files An example of the organizational structure for both Corporate & TestAmerica Richland is presented in Figure 4-1.

4.2 ROLES AND RESPONSIBILITIES

In order for the Quality Assurance Program to function properly, all members of the staff must clearly understand and meet their individual responsibilities as they relate to the quality program. This manual is specific to the Richland laboratory. Role descriptions for corporate personnel are defined in the CQMP. The following descriptions define each role in its relationship to the Quality Assurance Program.

4.2.1 Quality Assurance Program

The responsibility for quality lies with every employee of the laboratory. All employees have access to the QAM, are trained to this manual, and are responsible for upholding the standards therein. Each person carries out his/her daily tasks in a manner consistent with the goals and in accordance with the procedures in this manual and the laboratory's SOPs. All TestAmerica employees are responsible for implementing the Quality Program. All TestAmerica employees have Stop Work Authority.

4.2.2 Laboratory Director

The TestAmerica Richland Laboratory Director is responsible for the overall quality, safety, financial, technical, human resource and service performance of the whole laboratory and reports to their respective GM. The Laboratory Director provides the resources necessary to implement and maintain an effective and comprehensive Quality Assurance and Data Integrity Program.

Specific responsibilities include, but are not limited to:

- Ensuring that personnel are free from any commercial, financial and other undue pressures which might adversely affect the quality of their work.
- Exercising signature authority for QAM, SOPs, other QA documents, final reports and contracts.
- Ensuring TestAmerica's human resource policies are adhered to and maintained.
- Ensuring that sufficient numbers of qualified personnel are employed to supervise and perform the work of the laboratory.
- Ensuring that appropriate corrective actions are taken to address analyses identified as requiring such actions by internal and external performance or procedural audits.
- Ensuring that client specific reporting and QC requirements are met.
- Annually assessing the effectiveness of the QAM with respect to laboratory operations.

4.2.3 Quality Assurance Manager

The QA Manager has responsibility and authority to ensure the continuous implementation of the quality system based on ISO 17025. The QA Manager shall have documented training and/or experience in the QA/QC procedures and be knowledgeable in the quality system as defined under NELAC, AIHA and the DoD QSM.

The QA Manager reports directly to the Laboratory Director and has access to Corporate QA for advice and resources. This position is able to evaluate data objectively and perform assessments without outside (i.e., managerial) influence. Specific responsibilities include, but are not limited to:

- Having functions independent from laboratory operations for which he/she has quality assurance oversight. Has oversight of quality-related procurement.
- Maintaining and updating the QAM and exercising signature authority for laboratory quality documents.
- Monitoring and evaluating laboratory certifications; scheduling and oversight proficiency testing samples.
- Monitoring and communicating regulatory changes that may affect the laboratory to management. Ensure compliance with ISO 17025, the NELAC standard, AIHA policy modules and the DoD QSM.
- Training and advising the laboratory staff on QA/QC procedures that are pertinent to their daily activities.
- Evaluation of thoroughness and effectiveness of training.
- Having a general knowledge of the analytical test methods for which data audit/review is performed (and/or having the means of getting this information when needed).
- Arranging for or conducting internal audits on quality systems and the technical operation.
- Maintaining records of ethics-related training, including the type and proof of attendance.
- Maintaining, improving, and evaluating the corrective action database and the corrective and preventive action systems.
- Notifying laboratory management of deficiencies in the quality system and ensuring corrective action is taken. Procedures that do not meet the standards set forth in the QAM or laboratory SOPs are temporarily suspended following the procedures outlined in Section 13.
- Monitoring standards of performance in QC and quality assurance.
- Coordinating document control of SOPs, Minimum Detectable Concentration (MDC), control limits, and miscellaneous forms and information.
- Review of external audit reports and data validation requests.
- Development of suggestions and recommendations to improve quality systems.
- Exercising final authority to accept or reject data, and to stop work in the event that procedures or practices compromise the validity and integrity of analytical data.
- Maintaining functional separation from cost, schedule or production functional areas.
- Performing trend analysis to identify out-of-control conditions and initiate appropriate corrective actions.
- Submitting periodic reports to Laboratory Director and corporate QA.

4.2.4 Technical Manager

The Technical Manager(s) report(s) directly to the Laboratory Director. He/she is accountable for all analyses and analysts with respect to ISO 17025, the NELAC standard, AIHA and the DoD QSM. The scope of responsibility ranges from the new-hire process and existing technology through the ongoing training and development programs for analysts and instrumentation. Specific responsibilities include, but are not limited to:

- Coordinating, writing and reviewing preparation of all test methods, i.e., SOPs, with regard to quality, integrity, regulatory and optimum and efficient production techniques, and subsequent analyst training and interpretation of the SOPs for implementation and unusual project samples. He/she insures that the SOPs are properly managed and adhered to at the bench.
- Exercising signature authority for QAM and other QA documents.
- Reviewing and approving proposals, in accordance with an established procedure for the review of requests and contracts.
- Monitoring the validity of the analyses performed and data generated in the laboratory. This activity begins with reviewing and supporting all new business contracts, insuring data quality, analyzing internal and external non-conformances to identify root cause issues and implementing the resulting corrective and preventive actions, facilitating the data review process (training, development, and accountability at the bench), and providing technical and troubleshooting expertise on routine and unusual or complex problems.
- Certifying via signature on each Demonstration of Capability that personnel with appropriate educational and/or technical background perform all tests for which the laboratory is accredited by the DoD ELAP.
- Providing initial and continuing training and development programs to applicable laboratory staff.
- Coordinating technical audit responses with supervisors and QA Manager.

4.2.5 Operations Manager

The Operations Manager reports directly to the Laboratory Director, and manages and directs the analytical production sections of the laboratory. Specific responsibilities include:

- Constantly monitoring and modifying the processing of samples through the departments to achieve technical, client and regulatory requirements.
- Assuring adequate supervision of laboratory technicians and analysts to achieve planned processing of samples through the facility.
- Evaluating the level of internal/external non-conformances for all departments.
- Continuously evaluating production capacity and improving capacity utilization.
- Continuously evaluating compliance with client turnaround time (TAT) requirements, and addressing any problems that may hinder meeting the required and committed TATs from the various departments.
- Development and improvement of analyst training, in cooperation with the Technical Manager and QA Manager and in compliance with regulatory requirements.
- Utilizing supplies in an efficient manner.
- Supporting audits and complying with corrective actions, as applicable.

- Assisting to maintain a working environment which encourages open, constructive problem solving and continuous improvement.

4.2.6 Lab Support Supervisor

The Lab Support Supervisor reports directly to the Laboratory Director. Primary responsibilities include:

- Establishment and maintenance of the laboratory information system (LIMS) for tracking all samples in the laboratory.
- Continuously updating and enhancing LIMS to best support laboratory operations.
- Programming and testing modifications and changes to locally developed software.
- Coordination of testing to ensure that all LIMS software accurately performs its intended functions.
- Maintenance of historical software archives, software operating procedures (manuals), software changes/modifications (Change Log) and software version numbers.
- Maintenance of log of repairs and service performed on LIMS hardware.
- Development and verification of security practices to assure the integrity of LIMS data. Identification of threats, potential threats, and future threats.
- Assuring awareness of any environmental conditions of the facility housing the LIMS that may compromise LIMS raw data, and informing management of needed facility changes.

4.2.7 Environmental Health and Safety Coordinator (EHSC)

The EHSC reports directly to the Laboratory Director. Primary responsibilities include:

- Implementing daily requirements of the Environmental Health and Safety (EH&S) program.
- Ensuring that manufacturer Material Safety Data Sheets (MSDS) are up to date and available to all laboratory staff via the corporate website.
- Maintaining knowledge of regulations that affect EH&S at the facility, and assuring that all staff are aware of general safety and environmental requirements.
- Exercising signature authority to ensure that standard operating procedures include adequate safety precautions.

4.2.8 Radiation Safety Officer

The Radiation Safety Officer (RSO) reports directly to the Laboratory Director. Primary responsibilities include:

- Advising management on matters of policy related to implementation of the Radiation Protection Plan.
- Maintenance of the laboratory Radioactive Materials License and related certifications.
- Monitoring of laboratory operations and processes for compliance with the Radiation Protection Plan.
- Development of staff training for the handling of radioactive materials. Conducting, evaluating and documenting training of TestAmerica personnel responsible for handling radioactive materials.

4.2.9 Supervisors

Supervisors report to their department manager. Each one is responsible to:

- Ensure that analysts in their department adhere to applicable SOPs and the QA Manual.
- Participate in the selection, training, development of performance objectives and standards of performance, appraisal (measurement of objectives), scheduling, counseling, discipline, and motivation of analysts. Document these activities in accordance with systems developed by the QA and Human Resources Departments. Evaluate staffing sufficiency and overtime needs. Training consists of familiarization with SOP, QC, Safety, and computer systems.
- Encourage the development of analysts to become cross-trained in various methods.
- Provide guidance to analysts in resolving problems encountered daily during sample prep/analysis in conjunction with the Technical Manager, Operations Manager, and/or QA Manager.
- Ensure all logbooks are maintained, current, and properly labeled or archived.
- Report all non-conformance conditions to the QA Manager, Technical Manager, Operations Manager, and/or Laboratory Director.
- Maintain adequate and valid inventory of reagents, standards and other relevant resources required to perform daily analysis.
- Achieve optimum TATs on analyses, and compliance with holding times and related requirements.
- Assist with writing responses to external and internal audit issues.

4.2.10 Laboratory Analysts

Laboratory analysts are responsible for conducting analysis and performing all tasks assigned to them by the supervisor. Analysts are responsible to:

- Perform analyses while adhering to analytical and QC protocols prescribed by current SOPs, the QAM, and project-specific plans. Perform analyses honestly, accurately, timely, safely, and in the most cost-effective manner.
- Stop work if an unsafe situation arises.
- Document standard and sample preparation, instrument calibration and maintenance, data calculations, sample matrix effects, and any observed non-conformance on work lists, bench sheets, lab notebooks and/or the Non-Conformance Database according to SOP requirements.
- Report to their supervisor (or the Technical Manager or QA Manager as appropriate) all non-conformance situations, instrument problems, matrix problems and QC failures which might affect the reliability of the data.
- Suggest method improvements to their supervisor, the Technical Manager, or the QA Manager.
- Work cohesively as a team in their department to achieve the goals of accurate results, optimum TATs, cost effectiveness, cleanliness, complete documentation, and personal knowledge of environmental analysis.

4.2.11 Customer Service Manager/Manager of Project Management

The Customer Service Manager reports to the Laboratory Director and manages the Project Management Team to ensure total client satisfaction through timely communication and customer service. With the overall goal of total client satisfaction, specific responsibilities include:

- Technical training, mentoring and growth of the Project Management team.
- Technical liaison for the Project Management team .
- Human resource management of the Project Management team.
- Assigning primary and alternate project manager/associate to each client, and monitoring overall effectiveness of client communications.
- Ensuring that each project manager/associate communicates known client project and quality assurance requirements to the laboratory.
- Notifying laboratory managers of incoming projects and sample delivery schedules.
- Providing overall accountability to clients through support of project managers/associates when data package-related problems and resolving service issues.
- Assuring that appropriate staff are familiar with specific quotes, sample log-in review, and final report completeness.
- Coordinating with corporate sales staff to assure that quotes, proposals and related business communications are prepared in a complete and timely fashion to achieve laboratory business goals.
- Monitoring the status of all data package projects in-house to ensure timely and accurate delivery of reports.

4.2.12 Project Managers / Project Management Associates

Project Managers and Project Management Associates report to the Customer Service Manager, and serve as the interface between the laboratory and the laboratory's clients. With the overall goal of total client satisfaction, the functions of this position are outlined below:

- Ensures that assigned clients receive the proper sampling supplies.
- Notifies laboratory managers of incoming projects and sample delivery schedules. Coordinates technical and documentation details for incoming projects with laboratory staff.
- Ensures that known client specifications, when known, are met by communicating project and quality assurance requirements to the laboratory.
- Monitors the status of assigned projects in-house to ensure timely and accurate delivery of reports.
- Communicates proactively with assigned clients regarding Chain of Custody (COC) issues, sample progress, project or data package-related problems and to resolve service issues.
- Responds to client inquiries concerning sample status.
- Assembles and transmits required reports and invoicing for assigned clients. Certifies that client reports are complete and appropriate by signing certificate of analysis.

4.2.13 Sample Custodian

- Ensures implementation of proper sample receipt procedures, including COC requirements.
- Reports nonconformances associated with condition-upon-receipt of samples.
- Logs samples into the LIMS.
- Ensures that all samples are stored in the proper environment.

- Assists EHSC with sample disposal.

4.3 DEPUTIES

The following table defines who assumes the responsibilities of key personnel in their absence:

Key Personnel	Deputy
Laboratory Director	Erika Jordan
QA Manager	Rhonda Wagar
Radiochemistry Technical Manager	Steve Wheland
Metals/Asbestos Technical Manager	Tim Armstrong
EH&S Coordinator	Tim Armstrong
HAZWOPER Sample Shipping.	Pete Norton
Radiation Safety Officer	Tanya Wood

Figure 4-1.

Example Corporate Organization Chart Structure

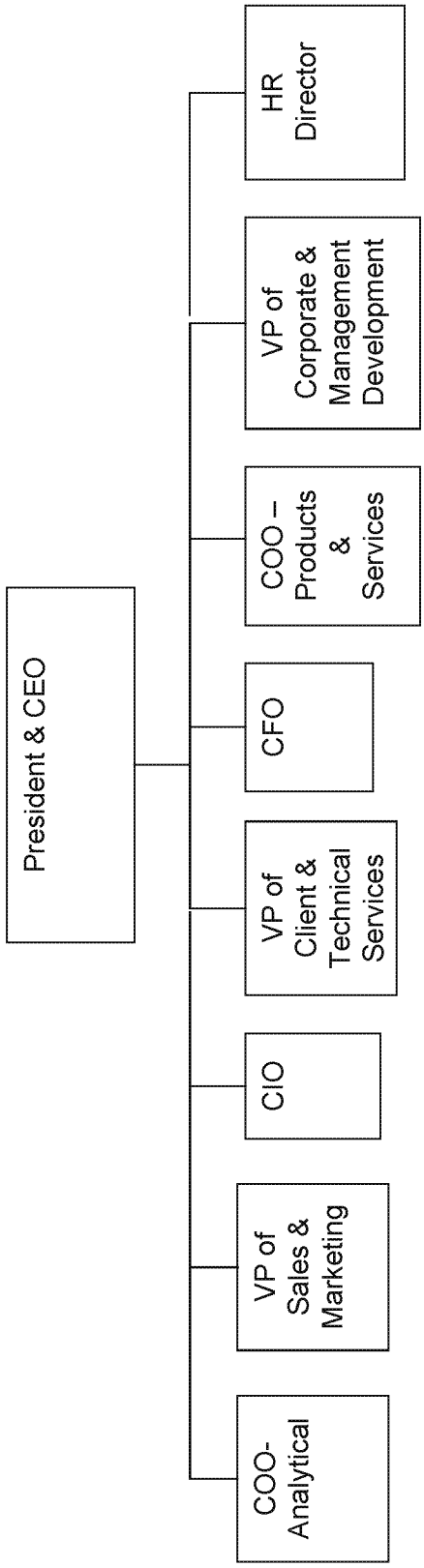

Example Laboratory Organization Chart - Structure
(The most current chart can be obtained from the QA Manager or Lab Director)

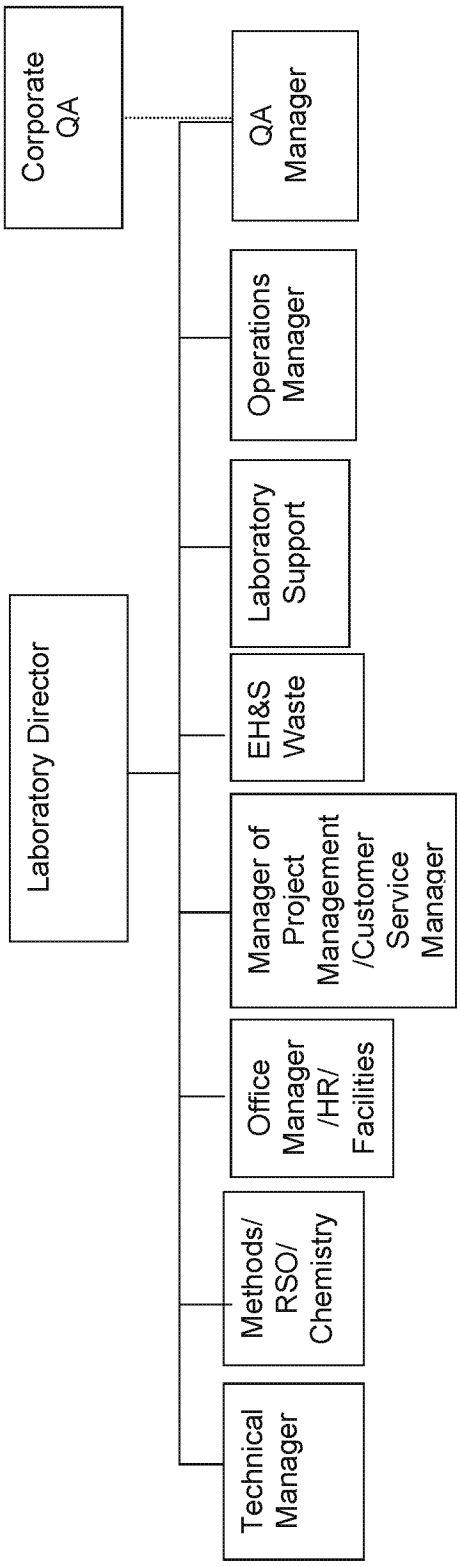

SECTION 5
QUALITY SYSTEM
(NELAC 5.4.2)

5.1 QUALITY POLICY STATEMENT

It is TestAmerica's Policy to:

- Provide data of known quality to its clients by adhering to approved methodologies, regulatory and customer requirements and the QA/QC protocols.
- Effectively manage all aspects of the laboratory and business operations by the highest ethical standards.
- Continually improve systems and provide support to quality improvement efforts in laboratory, administrative and managerial activities. TestAmerica recognizes that the implementation of a quality assurance program requires management's commitment and support as well as the involvement of the entire staff.
- Provide clients with the highest level of professionalism and the best service practices in the industry
- To comply with the ISO/IEC 17025:2005 International System and to continually improve the effectiveness of the management system.

Every staff member at the laboratory plays an integral part in quality assurance and is held responsible and accountable for the quality of their work. It is required that all laboratory personnel are trained and agree to comply with applicable procedures and requirements established by this document.

5.2 ETHICS AND DATA INTEGRITY

TestAmerica is committed to ensuring the integrity of its data and meeting the quality needs of its clients. The elements of TestAmerica's Ethics and Data Integrity Program include:

- An Ethics Policy (Policy No. CA-L-P-001) and employee ethics statements.
- Ethics and Compliance Officers (ECO).
- A training program.
- Self-governance through disciplinary action for violations.
- A confidential mechanism for anonymously reporting alleged misconduct and a means for conducting internal investigations of all alleged misconduct. (SOP No. CA-L-S-001)
- Procedures and guidance for recalling data if necessary (SOP No. CA-L-S-001).
- An effective external and internal monitoring system that includes procedures for internal audits (Section 16).
- Produce results, which are accurate and include QA/QC information that meets client pre-defined Data Quality Objectives.
- Present services in a confidential, honest and forthright manner.

- Provide employees with guidelines and an understanding of the ethical and quality standards of our industry.
- Operate our facilities in a manner that protects the environment and the health and safety of employees and the public.
- Obey all pertinent federal, state and local laws and regulations and encourage other members of our industry to do the same.
- Educate clients as to the extent and kinds of services available.
- Assert competency only for work for which adequate personnel and equipment are available and for which adequate preparation has been made.
- Promote the status of environmental laboratories, their employees, and the value of services rendered by them.

5.3 QUALITY SYSTEM DOCUMENTATION

The laboratory's Quality System is communicated through a variety of documents.

- Quality Assurance Manual – Each laboratory has a lab specific quality assurance manual.
- Corporate SOPs and Policies - Corporate SOPs and Policies are developed for use by all relevant laboratories. They are incorporated into the laboratory's normal SOP distribution, training and tracking system. Corporate SOPs may be general or technical.
- Work Instructions - A subset of procedural steps, tasks or forms associated with an operation of a management system (e.g., checklists, preformatted bench sheets, forms).
- Laboratory SOPs – General, Technical and EH&S
- Corporate Quality Policy Memorandums
- Laboratory QA/QC Policy Memorandums
- Laboratory Chemical Hygiene Plan
- Laboratory Waste Management Plan (comprised of several SOPs)
- Laboratory Radiation Protection Plan including Radioactive Material License.

The laboratory shall have SOPs in place for (but not limited to) the following areas:

- Sample Management
- Reagent/Standard Preparation
- General Laboratory Techniques
- Test Methods (for all procedures performed)
- Glassware Cleaning
- Instrument and Equipment Calibration and Maintenance
- Quality Control
- Corrective Action
- Data Reduction and Validation
- Reporting
- Records Management (contained in this QAM)
- Radioactive and Hazardous Material Management

5.3.1 Order of Precedence

In the event of a conflict or discrepancy between policies and procedural documents, the order of precedence is as follows:

- Corporate Quality Policy Memorandum
- Corporate Quality Management Plan (CQMP)
- Corporate SOPs and Policies
- Laboratory QA/QC Policy Memorandum
- Quality Assurance Manual
- Laboratory SOPs and Policies
- Other (Work Instructions (WI), Operator Aids, memos, flow charts, etc.)

Note: The laboratory has the responsibility and authority to operate in compliance with regulatory requirements of the jurisdiction in which the work is performed. Where the CQMP conflicts with those requirements, the regulatory requirements of the jurisdiction shall hold primacy. The laboratory QAM shall comply with the regulatory requirements and shall take precedence over the CQMP in those cases.

5.4 QA/QC OBJECTIVES FOR THE MEASUREMENT OF DATA

QA and QC are activities undertaken to achieve the goal of producing technically sound data that allows customers to characterize the sites or materials that have been sampled. QA is generally understood to be more comprehensive than QC. QA can be defined as the integrated system of activities that ensures that a product or service meets defined standards.

QC is generally understood to be limited to the analyses of samples and to be synonymous with the term *"analytical quality control"*. QC refers to the routine application of statistically based procedures to evaluate and control the accuracy of results from analytical measurements. The QC program includes procedures for estimating and controlling precision and bias and for determining Reporting Limits (RL).

The Request for Proposal (RFP) and QAPP provide a mechanism for the client and the laboratory to discuss the DQOs in order to ensure that analytical services closely correspond to client needs. The client is responsible for developing the QAPP. In order to ensure the ability of the laboratory to meet the DQOs specified in the QAPP, clients are advised to allow time for the laboratory to review the QAPP before being finalized. Additionally, the laboratory will provide support to the client for developing the sections of the QAPP that concern laboratory activities.

Historically, laboratories have described their QC objectives in terms of precision, accuracy, representativeness, comparability, completeness, selectivity and sensitivity (PARCCSS).

5.4.1 Precision

The laboratory objective for precision is to meet the performance for precision demonstrated for the methods on similar samples and to meet data quality objectives of the U. S. Environmental Protection Agency (EPA) and/or other regulatory programs. Precision is defined as the degree of reproducibility of measurements under a given set of analytical conditions (exclusive of field sampling variability). Precision is documented on the basis of replicate analysis, usually duplicate or matrix spike (MS) duplicate samples.

5.4.2 Accuracy

The laboratory objective for accuracy is to meet the performance for accuracy demonstrated for the methods on similar samples and to meet data quality objectives of the EPA and/or other regulatory programs. Accuracy is defined as the degree of bias in a measurement system. Accuracy may be documented through the use of laboratory control samples (LCS) and/or MS. A statement of accuracy is expressed as an interval of acceptance recovery about the mean recovery.

5.4.3 Representativeness

The laboratory objective for representativeness is to provide data which is representative of the sampled medium. Representativeness is defined as the degree to which data represent a characteristic of a population or set of samples and is a measurement of both analytical and field sampling precision. The representativeness of the analytical data is a function of the procedures used in procuring and processing the samples. The representativeness can be documented by the relative percent difference between separately procured, but otherwise identical samples or sample aliquots.

The representativeness of the data from the sampling sites depends on both the sampling procedures and the analytical procedures. The laboratory may provide guidance to the client regarding proper sampling and handling methods in order to assure the integrity of the samples.

5.4.4 Comparability

The comparability objective is to provide analytical data for which the accuracy, precision, representativeness and RL statistics are similar to these quality indicators generated by other laboratories for similar samples, and data generated by the laboratory over time.

The comparability objective is documented by inter-laboratory studies carried out by regulatory agencies or carried out for specific projects or contracts, by comparison of periodically generated statements of accuracy, precision and RLs with those of other laboratories.

5.4.5 Completeness

The completeness objective for data is 90% (or as specified by a particular project), expressed as the ratio of the valid data to the total data over the course of the project. Data will be considered valid if they are adequate for their intended use. Data usability will be defined in a QAPP, project scope or regulatory requirement. Data validation is the process for reviewing data to determine its usability and completeness. If the completeness objective is not met, actions will be taken internally and with the data user to improve performance. This may take the form of an audit to evaluate the methodology and procedures as possible sources for the difficulty or may result in a recommendation to use a different method.

5.4.6 Selectivity

Selectivity is defined as: The capability of a test method or instrument to respond to a target substance or constituent in the presence of non-target substances. Target analytes are separated from non-target constituents and subsequently identified/detected through one or more of the following, depending on the analytical method: extractions (separation), digestions (separation), interelement corrections (separation), use of matrix modifiers (separation), specific retention times (separation and identification), confirmations with different detectors (separation and identification), specific gamma/alpha energies (identification), specific mass spectra (identification), etc..

5.4.7 Sensitivity

Sensitivity refers to the amount of analyte necessary to produce a detector response that can be reliably detected or quantified.

5.5 CRITERIA FOR QUALITY INDICATORS

TestAmerica Richland laboratory has SOPs that summarize the precision and accuracy acceptability limits for analyses. The SOPs include an effective date and are updated each time new limits are generated. Some acceptability limits are derived from US EPA methods when they are required.

5.5.1 QC Charts

Trend Analysis shall be performed by the QA Manager or designee(s) quarterly to identify significant problems within trends and evaluated for timely and appropriate corrective actions. Quality related information which can be included as part of the trend analysis is:

- Performance Data
- Audit reports
- Surveillance reports
- Nonconformance reports
- Failure rates
- Quality-related information from external sources

Trends determined to be adverse to quality shall be reported to the responsible supervisor for corrective action.

Counting instrument QC data are maintained electronically. Hard copies of control charts are prepared upon request. Trend analysis is performed on an as needed basis.

5.6 QUALITY SYSTEM METRICS

In addition to the QC parameters discussed above, the entire Quality System is evaluated on a monthly basis through the use of specific metrics (refer to Section 16). These metrics are used to drive continuous improvement in the laboratory's Quality System.

SECTION 6
DOCUMENT CONTROL
(NELAC 5.4.3)

6.1 OVERVIEW

The QA Department is responsible for the control of documents used in the laboratory to ensure that approved, up-to-date documents are in circulation and out-of-date (obsolete) documents are archived or destroyed. The following documents, at a minimum, must be controlled.

- Laboratory Quality Assurance Manual
- Laboratory Standard Operating Procedures
- Laboratory Policies
- Work Instructions, Operator Aids and Forms
- Corporate Policies and Procedures distributed outside the intranet

Corporate Quality posts Corporate Manuals, SOPs, Policies, Work Instructions, White Papers and Training Materials on the company intranet site. These corporate documents are only considered controlled when they are read on the intranet site. Printed copies are considered uncontrolled unless the laboratory physically distributes them as controlled documents. A detailed description of the procedure for issuing, authorizing, controlling, distributing, and archiving corporate documents is found in Corporate SOP No. CW-Q-S-001, Corporate Document Control and Archiving.

The laboratory QA Department also maintains access to various references, document sources and software integral to the operation of the laboratory. This includes reference methods and regulations. Instrument manuals (hard or electronic copies) are also maintained by the laboratory. The location of these sources are maintained on a master document control list by QA.

The laboratory maintains control of records for raw analytical data and supporting records such as audit reports and responses, logbooks, standard logs, training files, Minimum Detection Limit (MDL) studies, Performance Testing (PT) studies, certifications and related correspondence, and corrective action reports. Raw analytical data consists of bound logbooks, instrument printouts, any other notes, magnetic media, electronic data and final reports.

6.2 DOCUMENT APPROVAL AND ISSUE

The pertinent elements of a control system for each document include a unique document title and number, the number of pages of the item, the effective date, revision number and the laboratory's name. The QA Manager is responsible for the maintenance of the system and maintains the items in the QA files.

Controlled documents are authorized by the QA Department and other management. In order to develop a new document, a manager submits an electronic or hard copy draft to the QA Department for suggestions and approval before use. Upon approval, QA personnel add the identifying version information to the document and retains the official document on file. The official document is provided to all applicable operational units (may include electronic access). Controlled documents are identified as such and records of their distribution are kept by the QA Department. Document control may be achieved by either electronic or hardcopy distribution. The QA Department maintains a list of the official versions of controlled documents.

Quality System Policies and Procedures will be reviewed annually and revised as appropriate. Changes to documents occur when a procedural change warrants. Altered or new text is identified through a change log entry at the end of the SOP or other controlled document. Use of the change log concept began in 2010; therefore until the next review cycle is completed for all documents some may not have this feature.

6.3 PROCEDURES FOR DOCUMENT CONTROL POLICY

Uncontrolled copies of the QAM and other controlled documents must not be used within the laboratory.

The QA Manager or designee controls distribution of controlled documents in two forms, electronic and hard copy. All controlled documents are posted to an SOP server directory, and can be viewed by laboratory staff in electronic PDF format. Previous revisions and back-up data are stored by the QA department in servers not accessible to the general staff.

Hard copies of controlled documents are distributed to all personnel and locations where needed. Distribution is accomplished through review of the linkage within the SOP database between document users and document titles by the QA Department when a document is issued or revised, or when the QA Manager is notified that training is completed for the use of a particular document or SOP.

For changes to SOPs
All SOPs and subsequent revisions shall be reviewed and approved by the Laboratory Director, Technical Manager or designee, the QA Manager and Environmental Health and Safety Coordinator. Each reviewer is responsible for ensuring that the procedure is accurate and adequate based on their area of expertise. During the revision process all work aids shall be evaluated and incorporated into the SOP as necessary.

Upon receipt of hard copy new procedures/revisions of controlled documents, the user shall remove the old version and insert the updated version of the document. The user will sign a document receipt form acknowledging the manual has been updated and will forward the signed form and old revision to the QA Department. The old version is disposed in the locked recycle bins available throughout the laboratory.

For clients who require approval of procedural change, a copy of the proposed revision shall be sent to the client for approval. The change shall not be implemented for that client until the client's requirements have been met.

Uncontrolled copies of manuals and SOPs will only be supplied to clients upon request. Uncontrolled copies will not be updated after distribution.

Forms, worksheets, work instructions and operator aids are organized by a QA assigned number. This number, date created, and revision number shall be placed on the bottom of the form. An original or copy of the form shall be maintained in the Quality files. Form revisions shall have the same requirements as the original form.

Occasionally, a minor variation to an SOP is needed that does not warrant a permanent change. This variation must be pre-approved and documented before beginning the task. To accomplish this, each SOP must contain the following text:

> "NOTE: One time procedural variations are allowed if deemed necessary by the professional judgment of supervision to accommodate variation in sample matrix, radioactivity, chemistry, sample size or other parameters. Any variation in procedure shall require approval by supervision and immediate

notification of the Quality Assurance Group. If contractually required, the client shall be notified prior to any procedure changes. A Nonconformance Memo shall be completed and forwarded to the Quality Assurance Group within one day of the supervisor's approval. The Nonconformance Memo will be filed in the project file. "

6.4 OBSOLETE DOCUMENTS

All invalid or obsolete documents are removed, or otherwise prevented from unintended use. The laboratory has specific procedures as described above to accomplish this. In general, obsolete documents are collected from employees according to distribution lists and are destroyed. At least one copy of the obsolete document is archived in the QA files.

SECTION 7
SERVICE TO THE CLIENT
(NELAC 5.4.7)

7.1 OVERVIEW

The laboratory has established procedures for the review of work requests, tender and contracts, oral or written. The procedures include evaluation of the laboratory's capability and resources to meet the contract's requirements within the requested time period. All requirements, including the methods to be used, must be adequately defined, documented and understood. For many environmental sampling and analysis programs, testing design is site or program specific and does not necessarily "fit" into a standard laboratory service or product. It is the laboratory's intent to provide both standard and customized environmental laboratory services to our clients.

A thorough review of technical and QC requirements contained in contracts is performed to ensure project success. The appropriateness of requested methods, and the lab's capability to perform them must be established. Projects, proposals and contracts are reviewed for adequately defined requirements and the laboratory's capability to meet those requirements. Alternate test methods that are capable of meeting the clients' requirements may be proposed by the lab. A review of the lab's capability to analyze non-routine analytes is also part of this review process.

All projects, proposals and contracts are reviewed for the client's requirements in terms of analyte lists, test methodology requested, sensitivity (detection and reporting levels), accuracy, and precision requirements (% Recovery, Relative Error Ratio (RER), and Relative Percent Difference (RPD). The reviewer ensures that the laboratory's test methods are suitable to achieve these regulatory and client requirements and that the laboratory holds the appropriate certifications and approvals to perform the work. The laboratory and any potential subcontract laboratories must be certified, as required, for all proposed tests.

The laboratory must determine if it has the necessary physical, personnel and information resources to meet the contract, and if the personnel have the expertise needed to perform the testing requested. Each proposal is checked for its impact on the capacity of the laboratory's equipment and personnel. As part of the review, the proposed TAT will be checked for feasibility.

Electronic or hard copy deliverable requirements are evaluated against the lab's capacity for production of the documentation.

If the laboratory cannot provide all services but intends to subcontract or workshare such services, whether to another TestAmerica facility or to an outside firm, this will be documented and discussed with the client prior to contract approval. (Refer to Section 8 for Subcontracting Procedures.)

The laboratory informs the client of the results of the review if it indicates any potential conflict, deficiency, lack of accreditation, or inability of the lab to complete the work satisfactorily. Any discrepancy between the client's requirements and the laboratory's capability to meet those requirements is resolved in writing before acceptance of the contract. It is necessary that the contract be acceptable to both the laboratory and the client. Amendments initiated by the client and/or TestAmerica, are documented in writing.
All contracts, QAPPs, Sampling and Analysis Plans (SAP), contract amendments, and documented communications become part of the project record.

The same contract review process is repeated when there are amendments to the original contract by the client, and the participating personnel are informed of the changes. Any accreditation changes such as suspension, revocation or voluntary withdrawal must be reported to the client.

7.2 REVIEW SEQUENCE AND KEY PERSONNEL

Appropriate personnel will review the work request at each stage of evaluation.

For routine projects and other simple tasks, a review by the Project Manager (PM) is considered adequate. The PM confirms that the laboratory has any required certifications, that it can meet the clients' data quality and reporting requirements and that the lab has the capacity to meet the clients TAT needs.

For new, complex or large projects, the proposed contract is given to the National Account Director, who will decide which lab will receive the work based on the scope of work and other requirements, including certification, testing methodology, and available capacity to perform the work. The contract review process is outlined in SOP No. CA-L-P-002, Contract Compliance Policy.

This review encompasses all facets of the operation. The scope of work is distributed to the appropriate personnel, as needed based on scope of contract, to evaluate all of the requirements shown above (not necessarily in the order below)

- Legal & Contracts Director
- General Manager
- The Laboratory Manager of Project Management
- The Laboratory Operations Manager
- Laboratory and/or Corporate Technical Managers
- Laboratory and/or Corporate Information Technology Managers/Directors
- Regional and/or National Account representatives
- Laboratory and/or Corporate Quality
- Laboratory and/or Corporate Environmental Health and Safety Managers/Directors
- The Laboratory Director reviews the formal laboratory quote and makes final acceptance for their facility.

The National Account Director, Legal Contracts Director, or local account representative then submits the final proposal to the client.

In the event that one of the above personnel is not available to review the contract, his or her back-up will fulfill the review requirements.

The Legal & Contracts Director maintains copies of all signed contracts. A copy also will be maintained by the project management group.

7.3 DOCUMENTATION

Appropriate records are maintained for every contract, tender or work request. All stages of the contract review process are documented and include records of any significant changes.

The contract will be distributed to and maintained by the appropriate sales/marketing personnel and the Regional Account Manager. A copy of the contract and formal quote will be filed with the laboratory PM and the Lab Director/Manager.

Records are maintained of pertinent discussions with a client to the client's requirements or the results of the work during the period of execution of the contract. The PM is responsible for maintaining all documentation including phone logs of conversations and email correspondence with the client.

7.3.1 Project-Specific Quality Planning

Communication of contract specific technical and QC criteria is an essential activity in ensuring the success of site specific testing programs. To achieve this goal, the laboratory assigns a PM to each client. The PM is the first point of contact for the client. It is the PM's responsibility to ensure that project-specific technical and QC requirements are effectively evaluated and communicated to the laboratory personnel before and during the project. QA department involvement may be needed to assist in the evaluation of custom QA requirements.

PMs are the primary client contact and they ensure resources are available to meet project requirements. Although PMs do not have direct reports or staff in production, they coordinate opportunities and work with laboratory management and supervisory staff to ensure available resources are sufficient to perform work for the client's project. Project management is positioned between the client and laboratory resources.

Prior to work on a new project, the dissemination of project information and/or project opening meetings may occur to discuss schedules and unique aspects of the project. Items to be discussed may include the project technical profile, TATs, methods, analyte lists, RLs, deliverables, sample hazards, or other special requirements. The PM introduces new projects to the laboratory staff through project kick-off meetings or to the supervisory staff. These meetings provide direction to the laboratory staff in order to maximize production and client satisfaction, while maintaining quality. In addition, project notes may be associated with each sample batch as a reminder upon sample receipt and analytical processing.

During the project, any change that may occur within an active project is agreed upon between the client/regulatory agency and the PM/laboratory. These changes (e.g., use of a non-standard method or modification of a method) and approvals must be documented prior to implementation. Documentation pertains to any document, e.g., letter, e-mail, variance, contract addendum, which has been signed by both parties.

Such changes are updated to the project notes and are introduced to the managers at these meetings. The laboratory staff is then introduced to the modified requirements via the PM or the individual laboratory supervisor. After the modification is implemented into the laboratory process, documentation of the modification is made in the case narrative of the data report(s) or by communication with the client.

The laboratory strongly encourages client visits to the laboratory and for formal/informal information sharing session with employees in order to effectively communicate ongoing client needs as well as project specific details for customized testing programs.

7.4 SPECIAL SERVICES

The laboratory cooperates with clients and their representatives to monitor the laboratory's performance in relation to work performed for the client. It is the laboratory's goal to meet all client requirements in addition to statutory and regulatory requirements. The laboratory has procedures to ensure confidentiality to clients (Section 16 and 25).

Note: ISO 17025/NELAC 2003 states that a laboratory "shall afford clients or their representatives cooperation to clarify the client's request". This topic is discussed in Section 7.

The laboratory's standard procedures for reporting data are described in Section 25. Special services are also available and provided upon request. These services include:

- Reasonable access for our clients or their representatives to the relevant areas of the laboratory for witnessing of tests performed for the client.
- Assist client-specified third party data validators as specified in the client's contract.
- Supplemental information pertaining to the analysis of their samples. Note: An additional charge may apply for additional data/information that was not requested prior to the time of sample analysis or previously agreed upon.

7.5 CLIENT COMMUNICATION

Project managers are the primary communication link to the clients. They shall inform their clients of any delays in project completion as well as any non-conformances in either sample receipt or sample analysis. Project management will maintain ongoing client communication throughout the entire client project. Technical Managers are available to discuss any technical questions or concerns that the client may have.

Whenever a contract needs to be amended after work has begun, the PM is responsible to report to the client any accreditation suspensions, revocations or voluntary withdrawals that are relevant to the contract. This may include accreditation scope

7.6 REPORTING

Analytical results are reported to clients according to the requirements in the client contract with the laboratory (see SOP RL-PM-001 for required steps). The laboratory works with each client to produce any special communication reports required by the contract.

7.7 CLIENT SURVEYS

The laboratory assesses both positive and negative client feedback. The results are used to improve overall laboratory quality and client service.

TestAmerica's Sales and Marketing teams periodically develop lab and client specific surveys to assess client satisfaction.

SECTION 8
SUBCONTRACTING OF TESTS
(NELAC 5.4.5)

8.1 OVERVIEW

For the purpose of this quality manual, the phrase subcontract laboratory refers to a laboratory external to the TestAmerica laboratories. The phrase "work sharing" refers to internal transfers of samples between TestAmerica laboratories. The term outsourcing refers to the act of subcontracting tests.

When contracting with our clients, the laboratory makes commitments regarding the services to be performed and the data quality for the results to be generated. When the need arises to outsource testing for our clients because of project scope, changes in laboratory capabilities, capacity or unforeseen circumstances, we must be assured that the subcontractors or work sharing laboratories understand the requirements and will meet the same commitments we have made to the client. Refer to TestAmerica's Corporate SOP on Subcontracting Procedures (CA-L-S-002) and the Work Sharing Process (CA-C-S-001).

When outsourcing analytical services, the laboratory will assure, to the extent necessary, that the subcontract or work sharing laboratory maintains a program consistent with the requirements of this document, the requirements specified in NELAC/ISO 17025 and/or the client's QAPP. All QC guidelines specific to the client's analytical program are transmitted to the subcontractor and agreed upon before sending the samples to the subcontract facility. Additionally, work requiring accreditation will be placed with an appropriately accredited laboratory. The laboratory performing the subcontracted work will be identified in the final report, as will non-NELAC accredited work where required. See Figure 8-1, Example- Subcontracted Sample Form.

The PMs, Customer Service Managers (CSM), or Regional Account Executives (RAE) for the Export Lab are responsible for obtaining client approval prior to outsourcing any samples. The laboratory will advise the client of a subcontract or work sharing arrangement in writing and when possible approval from the client shall be retained in the project folder.

Note: In addition to the client, some regulating agencies, such as the US Army Corps of Engineers and the USDA, require notification prior to placing such work.

For DOE or DoD projects, the laboratory shall not use any third party (sub-tier) laboratories, including other TestAmerica laboratories, for performance of work without written approval from the DOE Procurement Representative. Note that some DOE clients may not allow any subcontracting to a sub-tier laboratory. The laboratory using a sub-tier laboratory shall document and is responsible for ensuring that such sub-tier laboratory meets all of the requirements in this section, including being accredited to the DoD ELAP or other program as appropriate, and must be available for client inspections and audits.

8.2 QUALIFYING AND MONITORING SUBCONTRACTORS

Whenever a PM, Regional Account Executive (RAE) or Customer Service Manager (CSM) becomes aware of a client requirement or laboratory need where samples must be outsourced to another laboratory, the other laboratory(s) shall be selected based on the following:

- The first priority is to attempt to place the work in a qualified TestAmerica laboratory;
- Firms specified by the client for the task (Documentation that a subcontractor was designated by the

client must be maintained with the project file. This documentation can be as simple as placing a copy of an e-mail from the client in the project folder);

- Firms listed as pre-qualified and currently under a subcontract with TestAmerica. A listing of all approved subcontracting laboratories is available on the TestAmerica intranet site. Verify necessary accreditation, where applicable, (e.g. on the subcontractors NELAC, A2LA accreditation or State Certification);
- Firms identified in accordance with the company's Small Business Subcontracting program as small, women-owned, veteran-owned and/or minority-owned businesses;
- NELAC or A2LA accredited laboratories;
- In addition, the firm must hold the appropriate certification to perform the work required.

With the exception of DoD and DOE programs noted in 8.1, all TestAmerica laboratories are pre-qualified for outsourcing provided they hold the appropriate accreditations, can adhere to the project/program requirements and the client approved sending samples to that laboratory. The client must provide acknowledgement that the samples can be sent to that facility (an e-mail is sufficient documentation or if acknowledgement is verbal, the date, time, and name of person providing acknowledgement must be documented). The originating laboratory is responsible for communicating all technical, quality, and deliverable requirements as well as other contract needs. (Corporate SOP No. CA-C-S-001, Work Sharing Process).

When the potential sub-contract laboratory does not meet the above criteria, then to begin the process, Account Executives or PMs may nominate a laboratory as a subcontractor based on need. The decision to nominate a laboratory must be approved by the Laboratory Director. The Laboratory Director requests that the QA Manager begin the process of approving the subcontract laboratory as outlined in corporate SOP No. CA-L-S-002, Subcontracting Procedures. The client must provide acknowledgement that the samples can be sent to that facility (an e-mail is sufficient documentation or if acknowledgement is verbal, the date, time, and name of person providing acknowledgement must be documented).

8.2.1 Once the appropriate accreditation and legal information is received by the laboratory, it is evaluated for acceptability (where applicable) and forwarded to Corporate Contracts for formal contracting with the laboratory. They will add the lab to the approved list on the intranet site along with the associated documentation and notify the finance group for JD Edwards.

8.2.2 TestAmerica is responsible to the client for subcontracted work, with the exception that the client will assume responsibility for the quality of the data generated from the use of a subcontractor they have requested the lab to use. TestAmerica does not certify laboratories. The subcontractor is on our approved list and can only be recommended to the extent that we would use them.

8.2.3 The status and performance of qualified subcontractors will be monitored periodically by the Corporate Contracts and/or Quality Departments. Any problems identified will be brought to the attention of TestAmerica's Corporate Finance or Corporate Quality personnel.

- Complaints shall be investigated. Documentation of the complaint, investigation and corrective action will be maintained in the subcontractor's file on the intranet site. Complaints are posted using the Vendor Performance Report.
- Information must be updated on the intranet when new information is received from the subcontracted laboratories.

- Subcontractors in good standing will be retained on the intranet listing. The QA Manager will notify all TestAmerica laboratories and Corporate QA if any laboratory is removed from the intranet site. This notification will be posted on the intranet site and e-mailed to all Lab Directors/Managers, QA Managers and Sales personnel.

8.3 OVERSIGHT AND REPORTING

The PM must request that the selected subcontractor be presented with a subcontract, if one is not already executed between the laboratory and the subcontractor. The subcontract must include terms which flow down the requirements of our clients, either in the subcontract itself or through the mechanism of work orders relating to individual projects. A standard subcontract and the Lab Subcontractor Vendor Package (posted on the intranet) can be used to accomplish this, and the Legal & Contracts Director can tailor the document or assist with negotiations, if needed. The PM (or RAE or CSM) responsible for the project must advise and obtain client consent to the subcontract as appropriate, and provide the scope of work to ensure that the proper requirements are made a part of the subcontract and are made known to the subcontractor.

Prior to sending samples to the subcontracted laboratory, the PM confirms their certification status to determine if it's current and scope-inclusive. The information is documented on a Subcontracted Sample Form (Figure 8-3) and the form is retained in the project folder. For TestAmerica laboratories, certifications can be viewed on the company's TotalAccess database.

The Sample Control department is responsible for ensuring compliance with QA requirements and applicable shipping regulations when shipping samples to a subcontracted laboratory.

All subcontracted samples must be accompanied by a COC. A copy of the original COC sent by the client must be included with all samples subcontracted within TestAmerica.

Through communication with a subcontracted laboratory, the PM monitors the status of the subcontracted analyses, facilitates successful execution of the work, and ensures the timeliness and completeness of the analytical report.

Non-NELAC accredited work must be identified in the subcontractor's report as appropriate. If NELAC accreditation is not required, the report does not need to include this information.

Reports submitted from subcontractor laboratories are not altered and are included in their original form in the final project report. This clearly identifies the data as being produced by a subcontractor facility. If subcontract laboratory data is incorporated into the laboratory's Electronic Data Deliverable (EDD), the report must explicitly indicate which lab produced the data for which methods and samples.

Note: The results submitted by a TestAmerica work sharing laboratory may be transferred electronically and the results reported by the TestAmerica work sharing lab are identified on the final report. The report must explicitly indicate which lab produced the data for which methods and samples. The final report must include a copy of the completed COC for all work sharing reports.

8.4 CONTINGENCY PLANNING

With the exception of DoD and DOE programs noted in 8.1, the Laboratory Director may waive the full qualification of a subcontractor process temporarily to meet emergency needs. In the event this provision is utilized, the QA Manager will be required to verify certifications. See Section 8.2.2. The comprehensive approval process must then be initiated within 30 calendar days of subcontracting.

Figure 8-1.

Example - Subcontracted Sample Form

Date/Time: _____

Subcontracted Laboratory Information:

Subcontractor's Name: _____

Subcontractor Point of Contact: _____

Subcontractor's Address: _____

Subcontractor's Phone: _____

Analyte/Method: _____

Certified for State of Origin: _____

NELAC Certified: Yes_____ No_____

A2LA (or ISO 17025) Certified: Yes_____ No_____

CLP-like Required: Yes_____ No_____
(Full doc required)

Requested Sample Due Date: _____
(Must be put on COC)

Project Manager: _____

Laboratory Sample # Range: _____
(Only of Subcontracted Samples)

Laboratory Project Number (Billing Control #): _____

All subcontracted samples are to be sent via bonded carrier and Priority Overnight. Please attach tracking number below and maintain these records in the project files.

PM Signature_____**Date**_____

SECTION 9
PURCHASING SERVICES AND SUPPLIES
(NELAC 5.4.6)

9.1 OVERVIEW

Evaluation and selection of suppliers and vendors is performed, in part, on the basis of the quality of their products, their ability to meet the demand for their products on a continuous and short term basis, the overall quality of their services, their past history, and competitive pricing. This is achieved through evaluation of objective evidence of quality furnished by the supplier, which can include certificates of analysis, recommendations, and proof of historical compliance with similar programs for other clients. To ensure that quality critical consumables and equipment conform to specified requirements, all purchases from specific vendors are approved by a member of the supervisory or management staff. Capital expenditures are made in accordance with TestAmerica's Controlled Purchases Procedure, CW-F-S-007.

Contracts will be signed in accordance with TestAmerica's Corporate Authorization Matrix Policy, Policy No. CW-F-P-002. An RFP will be issued where more information is required from the potential vendor than just price. The RFP process allows TestAmerica to determine if vendors are capable of meeting requirements such as supplying all of the TestAmerica facilities, meeting required quality standards and adhering to necessary ethical and environmental standards. The RFP process also allows potential vendors to outline any additional capabilities they may offer.

9.2 GLASSWARE

Glassware used for volumetric measurements must be Class A or verified for accuracy according to laboratory procedure. Pyrex (or equivalent) glass should be used where possible. For safety purposes, thick-wall glassware should be used where available. Glassware to be used for DoD projects must meet acceptance criteria in the DoD QSM, Gray Box 31.

9.3 REAGENTS, STANDARDS & SUPPLIES

Purchasing guidelines for equipment and reagents must meet the requirements of the specific method and testing procedures for which they are being purchased. Solvents and acids are pre-tested in accordance with TestAmerica's Corporate SOP on Solvent and Acid Lot Testing and Approval, SOP No. CA-Q-S-001

9.3.1 Purchasing

Chemical reagents, solvents, glassware, and general supplies are ordered as needed to maintain sufficient quantities on hand. Material used in the analytical process must be of a known quality. The wide variety of materials and reagents available makes it advisable to specify recommendations for the name, brand, and grade of materials to be used in any determination. This information is contained in the method SOP.

Procurement of Quality-Related Items/Services

The quality of instruments, equipment, standards, reagents and laboratory containers used in analyses must be known so that their effect upon analytical results can be defined. These items must meet a minimum quality requirement. Laboratory staff responsible for selection and purchasing shall be trained to this detailed procurement process. The training documentation is encompassed in the QAM training. Quality related items or services (QRI) shall be evaluated to ensure that they meet the requirements and specifications established by TestAmerica Richland. These requirements and specifications can be obtained from project-specific QA

requirements, data quality objectives, analytical method requirements and defined technical specifications. Verification that such requirements are met can be performed by one of the following:

- Source evaluation and selection (i.e. historical performance)
- Source verification
- Audit
- Examination of items or services before use

Quality specifications shall be included or referenced in the purchasing documents for the procurement of the applicable items/services. Reference to an approved model, lot number, catalog line item or chemical grade is sufficient. Procurement records shall be maintained, including evidence of conformance. Any changes to procurement documents shall receive the same level of review and approval as the original documents.

If applicable, the procurement process shall ensure that the supplier, designer and end-user requirements are met during the production phase.

When the QRI is received it shall be verified that the specified requirements have been met, such as material certificates are included and delivered on time. If the QRI meets the requirements, it is released for use and maintained appropriately. Receiving documentation (i.e. packing slip) is initialed to document inspection and filed by the Laboratory Support department.

If the QRI does not meet specifications, a Nonconformance Memo shall be generated. Corrective actions for failure of an item/service to meet required specifications are as follows:

- Review current supplies and segregate the affected items.
- Return item(s) to vendor or destroy
- Evaluate a new lot or alternate supplier
- Evaluate the impact on product or process
- Notification to the appropriate management

Receipt records for quality-affecting items or services must include the following information as applicable:

- Date of receipt
- Expiration date
- Source
- Lot or serial number
- Calibration and verification records
- Certifications

For items that are used regularly by TestAmerica Richland where no unique requirements or specifications are required, the items may be purchased off-the-shelf. These items are ordered from the supplier on the basis of specifications set forth in the supplier's published product description. Off-the-shelf items include general laboratory supplies such as glassware, filter paper and pipettes.

Evaluation of instruments purchased shall be conducted according to acceptance testing (i.e. initial calibration). Acceptance criteria may include instrument reliability, sensitivity, stability, accuracy and ability to interface with existing computer systems and networks.

9.3.2 Receiving

It is the responsibility of the purchasing manager to receive the shipment and to verify that the items meet requirements. Once the ordered reagents or materials are received, the analyst compares the information on the label or packaging to the original order to ensure that the purchase meets the quality level specified. MSDS are available online through the Company's intranet website. Anyone may review the MSDS for relevant information on the safe handling and emergency precautions of on-site chemicals.

9.3.3 Specifications

All methods in use in the laboratory specify the grade of reagent that must be used in the procedure. If the quality of the reagent is not specified, it may be assumed that it is not significant in that procedure and, therefore, any grade reagent may be used. It is the responsibility of the analyst to check the procedure carefully for the suitability of grade of reagent.

Chemicals must not be used past the manufacturer's expiration date and must not be used past the expiration time noted in a method SOP. If dates are not provided, the laboratory may contact the manufacturer to determine an expiration date.

The laboratory assumes a five year expiration date on inorganic dry chemicals unless noted otherwise by the manufacturer or by the reference source method.

An expiration date cannot be extended if the dry chemical is discolored or appears otherwise physically degraded, the dry chemical must be discarded.

Wherever possible, standards must be traceable to national or international standards of measurement or to national or international reference material. Records to that effect are available to the user. Secondary standard expiration dates cannot exceed that of the primary standard. The RSO must approve radioactive material purchases.

Compressed gases in use are checked for pressure and secure positioning daily. The minimum total pressure must be approximately 500 psig or the tank should be replaced. The quality of the gases must meet method or manufacturer specification or be of a grade that does not cause any analytical interference.

Water used in the preparation of standards or reagents must have a specific conductivity of less than 1 mmho/cm (or specific resistivity of greater than 1.0 megohm-cm) at 25°C. The specific resistivity is checked and recorded for each use. If the water's resistivity is less than the specified limit, the Reagent Preparation Laboratory must make arrangements for correction.

The laboratory may purchase reagent grade (or other similar quality) for use in the laboratory. This water must be certified "clean" by the supplier for all target analytes or otherwise verified by the laboratory prior to use. This verification is documented.

9.3.4 Storage

Reagent and chemical storage is important from the aspects of both integrity and safety. Light-sensitive reagents may be stored in brown-glass containers. Specific storage instructions for reagents and chemicals can be found in the Corporate Environmental Health and Safety Manual (Corp Doc No. CW-E-M-001) and laboratory analytical SOPs. Standards must be stored separately from samples. Radioactive materials are stored in a designated area.

9.4 PURCHASE OF EQUIPMENT/INSTRUMENTS/SOFTWARE

When a new piece of equipment is needed, either for additional capacity or for replacing inoperable equipment, the analyst or supervisor makes a supply request to the Operations Manager and/or the Laboratory Director. If the request is approved, the procedures outlined in Policy No. CA-T-P-001, Qualified Products List, are followed. A decision is made as to which piece of equipment can best satisfy the requirements. The appropriate written requests are completed and purchasing places the capital request.

Upon receipt of a new or used piece of equipment, an identification name, such as ALP200, is assigned and added to the equipment list that is maintained by the Lab Support Department. Its capability is assessed to determine if it is adequate or not for the specific application. Instruments shall be set up according to the manufacturer's instructions. Any deviations shall be documented in the Instrument Database (IDB).

Software operation must be deemed reliable and evidence of instrument verification must be retained by the Lab Support Department. Software certificates supplied by the vendors are filed with the Lab Support Department. The manufacturer's operation manual is retained by the appropriate supervisor.

9.5 SERVICES

Service to analytical instruments (except analytical balances) is performed on an as needed basis. Routine preventative maintenance is discussed in Section 20. The need for service is determined by analysts and/or supervisors. The service providers that perform the services are approved by the QA Manager.

9.6 SUPPLIERS

TestAmerica selects vendors through a competitive proposal/bid process, strategic business alliances or negotiated vendor partnerships (contracts). The level of control used in the selection process is dependent on the anticipated dollar amount and the potential impact on TestAmerica business. Vendors that provide test and measuring equipment, standards, certified containers, instrument related service contracts or subcontract laboratory services shall be subject to more rigorous controls than vendors that provide off-the-shelf items of defined quality that meet the end use requirements. The JD Edwards purchasing system includes all suppliers /vendors that have been approved for use.

Evaluation of suppliers is accomplished by ensuring the supplier ships the product or material ordered and that the material is of the appropriate quality. This is documented by signing off on packing slips or other supply receipt documents. The purchasing documents contain the data that adequately describe the services and supplies ordered.

Any issues of vendor performance are to be reported immediately by the laboratory staff to the Corporate Purchasing Group by completing a Vendor Performance Report.

The Corporate Purchasing Group will work through the appropriate channels to gather the information required to clearly identify the problem and will contact the vendor to report the problem and to make any necessary arrangements for exchange, return authorization, credit, etc.

As deemed appropriate, the Vendor Performance Reports will be summarized and reviewed to determine corrective action necessary, or service improvements required by vendors

When there are indications that subcontractors knowingly supplied items or services of substandard quality, this information shall be forwarded to appropriate management for action and notification sent to the affected clients.

The laboratory has access to a listing of all approved suppliers of critical consumables, supplies and services. This information is provided through the JD Edwards purchasing system.

9.6.1 New Vendor Procedure

TestAmerica employees who wish to request the addition of a new vendor must complete a J.D. Edwards Vendor Add Request Form, available on the intranet site.

New vendors are evaluated based upon criteria appropriate to the products or services provided as well as their ability to provide those products and services at a competitive cost. Vendors are also evaluated to determine if there are ethical reasons or potential conflicts of interest with TestAmerica employees that would make it prohibitive to do business with them as well as their financial stability. The QA Department and/or the Technology Director are consulted with vendor and product selection that have an impact on quality.

SECTION 10
COMPLAINTS
(NELAC 5.4.8)

10.1 OVERVIEW

The laboratory considers an effective client complaint handling process to be of significant business and strategic value. Listening to and documenting client concerns captures 'client knowledge' that enables our operation to continually improve processes and client satisfaction. An effective client complaint handling process also provides assurance to the data user that the laboratory will stand behind its data, service obligations and products.

A client complaint is any expression of dissatisfaction with any aspect of our business services, communications, responsiveness, data, reports, invoicing and other functions expressed by any party, whether received verbally or in written form. Client inquiries, complaints or noted discrepancies are documented, communicated to management, and addressed promptly and thoroughly.

The laboratory has procedures for addressing both external and internal complaints with the goal of providing satisfactory resolution to complaints in a timely and professional manner. The nature of the complaint is identified, documented and investigated, and an appropriate action is determined and taken. In cases where a client complaint indicates that an established policy or procedure was not followed, the QA Department must evaluate whether a special audit must be conducted to assist in resolving the issue. A written confirmation or letter to the client, outlining the issue and response taken is recommended as part of the overall action taken.

The process of complaint resolution and documentation utilizes the procedures outlined in Section 12 (Corrective Actions) and is documented following the client complaint/compliment tracking form. It is the laboratory's goal to provide a satisfactory resolution to complaints in a timely and professional manner.

10.2 EXTERNAL COMPLAINTS

An employee that receives a complaint initiates the complaint resolution process and the documentation of the complaint.

The general steps in the complaint handling process are:

- Receiving Complaints
- Complaint Investigation and Service Recovery
- Process Improvement

The laboratory shall inform the initiator of the complaint of the results of the investigation and the corrective action taken, if any.

10.3 INTERNAL COMPLAINTS

Internal complaints include, but are not limited to: errors and non-conformances, training issues, internal audit findings, and deviations from methods. Corrective actions may be initiated by any staff member who observes a nonconformance and shall follow the procedures outlined in Section 12. In addition, corporate management, Sales and Marketing and IT may initiate a complaint by contacting the laboratory or through the corrective action system described in Section 12.

10.4 MANAGEMENT REVIEW

The number and nature of client complaints is reported by the QA Manager to the Laboratory Director and corporate QA in the QA Monthly report. Monitoring and addressing the overall level and nature of client complaints and the effectiveness of the solutions is part of the Annual Management Review (Section 16)

SECTION 11
CONTROL OF NON-CONFORMING WORK
(NELAC 5.4.9)

11.1 OVERVIEW

In the context of radiochemical and environmental testing, a non-conformance is any situation in which some aspect of the work does not conform to the laboratory's own procedures or agreed client requirements. A non-conformance does not necessarily invalidate the reported data, but it does initiate the requirements of this section.

When data discrepancies are discovered or deviations and departures from laboratory SOPs, policies and/or client requests have occurred, corrective action is taken immediately. First, the laboratory evaluates the significance of the nonconforming work. Then, a corrective action plan is initiated based on the outcome of the evaluation. If it is determined that the nonconforming work is an isolated incident, the plan could be as simple as adding a qualifier to the final results and/or making a notation in the case narrative. If it is determined that the nonconforming work is a systematic or improper practices issue, the corrective action plan could include a more in depth investigation and a possible suspension of an analytical method. In all cases, the actions taken are documented using the laboratory's corrective action system (refer to Section 12).

11.2 RESPONSIBILITIES AND AUTHORITIES

TestAmerica's Corporate SOP entitled Internal Investigation of Potential Data Discrepancies and Determination for Data Recall (SOP No. CA-L-S-001) outlines the general procedures for the reporting and investigation of data discrepancies and alleged incidents of misconduct or violations of TestAmerica's data integrity policies as well as the policies and procedures related to the determination of the potential need to recall data.

Under certain circumstances the Laboratory Director or QA Manager may authorize departures from documented procedures or policies. The departures may be a result of procedural changes due to the nature of the sample; a one-time procedure for a client; QC failures with insufficient sample to reanalyze, etc. Where required, the client will be informed of the departure prior to initiating the change. Any policy or procedure deviation shall be documented and applicable client notification taken as described in the nonconformance SOP. Any impacted data must be referenced in a case narrative and/or flagged with an appropriate data qualifier.

Any nonconforming work or data discrepancy discovered by any laboratory staff member must be reported to facility senior management within 24 hours. The Senior Management staff is comprised of the Laboratory Director, the QA Manager, and the Technical Manager. The reporting of issues involving alleged violations of TestAmerica's Data Integrity or Manual Integration procedures must be conveyed to an ECO, Director of Quality & Client Advocacy and the Corporate Quality Director within 24 hours of discovery.

Whether an inaccurate result was reported due to calculation or quantitation errors, data entry errors, improper practices, or failure to follow SOPs, the data must be evaluated to determine the possible effect.

The Laboratory Director/Manager, QA Manager, ECOs, Corporate Quality, the Chef Operating Officer (COO), General Managers and the Quality Directors have the authority and responsibility to halt work, withhold final reports, or suspend an analysis for due cause as well as authorize the resumption of work.

All lab employees have the authority to stop work for reasons of unresolved safety or quality issues. Employees are encouraged to work through their chain of command to resolve such problems, but TestAmerica also presents other lines of communication in ethics and safety training that are available to all employees.

11.3 EVALUATION OF SIGNIFICANCE AND ACTIONS TAKEN

For each nonconforming issue reported, an evaluation of its significance and the level of management involvement needed is made. This includes reviewing its impact on the final data, whether or not it is an isolated or systematic issue, and how it relates to any special client requirements.

TestAmerica's Corporate Data Investigation & Recall Procedure (SOP No. CA-L-S-001) distinguishes between situations when it would be appropriate for laboratory management to make the decision on the need for client notification (written or verbal) and data recall (report revision) and when the decision must be made with the assistance of the ECOs and Corporate Management. Laboratory level decisions are documented and approved using the laboratory's standard nonconformance/corrective action reporting in lieu of the data recall determination form contained in TestAmerica's Corporate SOP No. CA-L-S-001.

When applicable (i.e. for all affected DOE clients), the laboratory shall immediately notify the affected clients of potential data quality issues. Corrective actions taken to resolve the issue shall be submitted to the client in a timely and responsive manner.

11.4 PREVENTION OF NONCONFORMING WORK

If it is determined that the nonconforming work could recur, further corrective actions must be made following the laboratory's corrective action system.

On a monthly basis, the QA Department evaluates non-conformances to determine if any nonconforming work has been repeated multiple times. If so, the laboratory's corrective action process may be followed.

11.5 METHOD SUSPENSION/RESTRICTION (STOP WORK PROCEDURES)

In some cases it may be necessary to suspend/restrict the use of a method or target compound which constitutes significant risk and/or liability to the laboratory. Suspension/restriction procedures can be initiated by any of the person in the laboratory.

Prior to suspension/restriction, confidentiality will be respected, and the problem and the required corrective and preventive action will be stated in writing and presented to the Laboratory Director.

The Laboratory Director shall arrange for the appropriate personnel to meet with the QA Manager as needed. This meeting shall be held to confirm that there is a problem, that suspension/restriction of the method is required and will be concluded with a discussion of the steps necessary to bring the test fully back on line. In some cases that may not be necessary if all appropriate personnel have already agreed there is a problem and there is agreement on the steps needed to bring the test fully back on line.

The QA Manager will also initiate a corrective action report as described in Section 12 if one has not already been started. A copy of any meeting notes and agreed upon steps should be faxed or e-mailed by the laboratory to the appropriate General Manager and member of Corporate QA. This fax/e-mail acts as notification of the incident.

After suspension/restriction, the lab will hold all reports to clients pending review. No faxing, mailing or distributing through electronic means may occur. The report must not be posted for viewing on the internet. It is the responsibility of the Laboratory Director to hold all reporting and to notify all relevant laboratory personnel regarding the suspension/restriction (i.e., Project Management, Log-in, etc...). Analysis may proceed in some instances depending on the non-conformance issue.

Within 72 hours, the QA Manager will determine if compliance is now met and reports can be released, OR determine the plan of action to bring work into compliance, and release work. A team, with all principals involved (Laboratory Director, Technical Manager, QA Manager, Supervisors) can devise a start-up plan to cover all steps from client notification through compliance and release of reports. Project Management, the Director of Client Services and Sales and Marketing should be notified if clients must be notified or if the suspension/restriction affects the laboratory's ability to accept work. The QA Manager must approve start-up or elimination of any restrictions after all corrective action is complete. This approval is given by final signature on the completed corrective action report as described in Section 12.

If the nonconformance involves 10 CFR 21 "Reporting of Defects and Noncompliance" requirements for an NRC licensee, the Laboratory Director or designee shall be informed and the project manager shall verbally inform the customer of the nonconformance, followed by a written report to the customer within five days.

A complete copy of 10 CFR 21 shall posted in a conspicuous location. The following notification shall also be posted:

ANY EMPLOYEE WHO HAS REASON TO BELIEVE THAT GOODS OR SERVICES SUBJECT TO REGULATION BY THE NUCLEAR REGULATORY COMMISSION HAVE BEEN DELIVERED FROM THIS FACILITY WHICH ARE NONCOMPLIANT OR DEFECTIVE, AS DEFINED IN 10 CFR 21 SHALL IMMEDIATELY INFORM HIS SUPERVISOR.

SECTION 12
CORRECTIVE ACTION
(NELAC 5.4.10)

12.1 OVERVIEW

A major component of TestAmerica's QA Program is the problem investigation and feedback mechanism designed to keep the laboratory staff informed on quality related issues and to provide insight to problem resolution. When nonconforming work or departures from policies and procedures in the quality system or technical operations are identified, the corrective action procedure provides a systematic approach to assess the issues, restore the laboratory's system integrity, and prevent reoccurrence. Corrective actions are documented using Non-Conformance Memos (NCM) and Corrective Action Reports (CAR).

The DOE requires that prior to implementation of corrective actions where client data is affected, the laboratory shall notify the client of the proposed corrective action.

12.2 GENERAL

Problems within the quality system or within analytical operations may be discovered in a variety of ways, such as QC sample failures, internal or external audits, PT performance, client complaints, staff observation, etc. SOP RL-QA-002 provides further detail about the laboratory's nonconformance system.

The purpose of a corrective action system is to:

- Identify non-conformance events and assign responsibility for investigation.
- Resolve non-conformance events and assign responsibility for any required corrective action.
- Identify Systematic Problems before they become serious.
- Identify and track Client complaints and provide resolution (see more on client complaints in Section 11).

12.2.1 Non-Conformance Memo - is used to document the following types of corrective actions:

- Deviations from an established procedure or SOP
- QC outside of limits (non matrix related)
- Isolated Reporting / Calculation Errors
- Client Complaints
- Discrepancies in materials / goods received vs. manufacturer packing slips.

12.2.2 Corrective Action Report - is used to document the following types of corrective actions:

- Questionable trends that are found in the monthly review of NCMs.
- Issues found while reviewing NCMs that warrant further investigation.
- Internal and External Audit Findings, if further investigations are warranted.
- Failed or Unacceptable PT results.
- Corrective actions that cross multiple departments in the laboratory.
- Systematic Reporting / Calculation Errors

12.3 CLOSED LOOP CORRECTIVE ACTION PROCESS

Any employee in the company can initiate a corrective action. There are four main components to a closed-loop corrective action process once an issue has been identified: Cause Analysis, Selection and Implementation of Corrective Actions (both short and long term), Monitoring of the Corrective Actions, and Follow-up.

12.3.1 Cause Analysis

- Upon discovery of a non-conformance event, the event must be defined and documented. An NCM or CAR must be initiated, someone is assigned to investigate the issue and the event is investigated for cause. Table 12-1 provides some general guidelines on determining responsibility for assessment.
- The cause analysis step is the key to the process as a long term corrective action cannot be determined until the cause is determined.
- If the cause is not readily obvious, the investigator should consult the Supervisor, the Technical Manager, Lab Director, and/or the QA Manager.
- Root Cause Analysis is a class of problem solving (investigative) methods aimed at identifying the basic or causal factor(s) that underlie variation in performance or the occurrence of a significant failure. The root cause may be buried under seemingly innocuous events, many steps preceding the perceived failure. At first glance, the immediate response is typically directed at a symptom and not the cause. Typically, root cause analysis would be best with three or more incidents to triangulate a weakness. Systematically analyze and document the Root Causes of the more significant problems that are reported. Identify, track, and implement the corrective actions required to reduce the likelihood of recurrence of significant incidents. Determine the trend of the Root Cause data from these incidents to identify Root Causes that, when corrected, can lead to dramatic improvements in performance by eliminating entire classes of problems. Identify the one event associated with the problem and ask why this event occurred. Brainstorm the root causes of failures by asking why events occurred or conditions existed; and then why the cause occurred five consecutive times until you get to the root cause. For each of these sub events or causes, ask why it occurred. Repeat the process for the other events associated with the incident. Root cause analysis does not mean the investigation is over. Look at technique, or other systems outside the normal indicators. Often creative thinking will find root causes that ordinarily would be missed, and continue to plague the laboratory or operation.

12.3.2 Selection and Implementation of Corrective Actions

- Where corrective action is needed, the laboratory shall identify potential corrective actions. The action(s) most likely to eliminate the problem and prevent recurrence are selected and implemented. Responsibility for implementation is assigned.
- Corrective actions shall be to a degree appropriate to the magnitude of the problem identified through the cause analysis.
- Whatever corrective action is determined to be appropriate, the laboratory shall document and implement the changes. The NCM or CAR is used for this documentation.

12.3.3 Monitoring of the Corrective Actions

- The Supervisor and QA Manager are responsible to ensure that the corrective action taken was effective.
- Ineffective actions are documented and re-evaluated until acceptable resolution is achieved. Supervisors are accountable to the Laboratory Director to ensure final acceptable resolution is achieved and documented appropriately.
- Each NCM and CAR are tracked, and a monthly summary of all corrective actions is reviewed, to aid in ensuring that the corrective actions have taken effect.

- The QA Manager reviews monthly NCMs and CARs for trends. Highlights are included in the QA monthly report (refer to Section 16). If a significant trend develops that adversely affects quality, an audit of the area is performed and corrective action implemented.
- Any out-of-control situations that are not addressed acceptably at the laboratory level may be reported to the Corporate Quality Director by the QA Manager, indicating the nature of the out-of-control situation and problems encountered in solving the situation.

12.3.4 Follow-up Audits

- Follow-up audits may be initiated by the QA Manager and shall be performed as soon as possible when the identification of a nonconformance casts doubt on the laboratory's compliance with its own policies and procedures, or on its compliance with state or federal requirements.
- These audits often follow the implementation of the corrective actions to verify effectiveness. An additional audit would only be necessary when a critical issue or risk to business is discovered.
- Also refer to Section 15.1.4, Special Audits.

12.4 TECHNICAL CORRECTIVE ACTIONS

In addition to providing acceptance criteria and specific protocols for technical corrective actions in the method SOPs, the laboratory has general procedures to be followed to determine when departures from the documented policies and procedures and QC have occurred (refer to Section 11). The documentation of these procedures is through the use of an NCM.

Table 12-1 provides some general guidelines for identifying the individual(s) responsible for assessing each QC type and initiating corrective action. The table also provides general guidance on how a data set should be treated if associated QC measurements are unacceptable. Specific procedures are included in Method SOPs, Work Instructions and QAM Sections 19 and 20. All corrective actions are reviewed monthly, at a minimum by the QA Manager and highlights are included in the QA monthly report.

To the extent possible, samples shall be reported only if all QC measures are acceptable. If the deficiency does not impair the usability of the results, data will be reported with an appropriate data qualifier and/or the deficiency will be noted in the case narrative. Where sample results may be impaired, the Project Manager is notified by an NCM and appropriate corrective action (e.g., reanalysis) is taken and documented.

Table 12-1. Example – General Corrective Action Procedures

QC Activity ***(Individual Responsible for Initiation/Assessment)***	**Acceptance Criteria**	**Recommended Corrective Action**
Matrix Spike / Matrix Spike Duplicate (MS/MSD) *(Analyst, Data Reviewer)*	- % Recovery within limits documented in Data Review SOP	- If the acceptance criteria for duplicates or matrix spikes are not met because of matrix interferences, the acceptance of the analytical batch is determined by the validity of the LCS. - If the LCS is within acceptable limits the batch is acceptable. - The results of the duplicates, matrix spikes and the LCS are reported with the data set.
LCS *(Analyst, Data Reviewer)*	- % Recovery within limits specified in Data Review SOP.	-Recount/Reanalyze, if still not acceptable, Batch may be re-prepared and re-analyzed. **Note:** If there is insufficient sample or the holding time cannot be met, contact client and note in case narrative
Method Blank (MB) *(Analyst, Data Reviewer)*	< Limit of Detection	- Reanalyze/Recount blank. - If still positive, determine source of contamination. If necessary, reprocess (i.e. digest or extract) entire sample batch. Report blank results.
PT Samples *(QA Manager, Supervisor)*	- Criteria supplied by PT Supplier.	- Any failures must be investigated for cause. Failures may result in the need to repeat a PT sample to show the problem is corrected.
Internal / External Audits *(QA Manager, Supervisor, Laboratory Director)*	- Defined in Quality System documentation such as SOPs, QAM, etc..	- Non-conformances must be investigated through CAR system and necessary corrections must be made.
Reporting / Calculation Errors (Depends on issue – possible individuals include: Analysts, Data Reviewers, Project Managers, Supervisor, QA Manager, Corporate QA, Corporate Management)	- SOP CA-L-S-001, Internal Investigation of Potential Data Discrepancies and Determination for Data Recall.	- Corrective action is determined by type of error. Follow the procedures in SOP CA-L-S-001.

QC Activity ***(Individual Responsible for Initiation/Assessment)***	**Acceptance Criteria**	**Recommended Corrective Action**
Client Complaints *(Project Managers, Lab Director, QA Manager, Sales and Marketing)*	-	- Corrective action is determined by the type of complaint. For example, a complaint regarding an incorrect address on a report will result in the report being corrected and then follow-up must be performed on the reasons the address was incorrect (e.g., database needs to be updated).
QA Monthly Report (Refer to Section 17 for an example) (QA Manager, Lab Director, Supervisors)	- QAM, SOPs.	- Corrective action is determined by the type of issue. For example, CARs for the month are reviewed and possible trends are investigated.
Spilled reagent or sample (analyst and/or EHSC)	N/A	Comment on analytical worksheet or Incident Report

12.5 BASIC CORRECTIONS

When mistakes occur in records, each mistake shall be crossed out, not obliterated (e.g. no white out), and the correct value entered alongside. All such corrections shall be initialed or signed and dated by the person making the correction. In the case of records stored electronically, the original uncorrected file must be maintained intact and a second corrected file is created.

When corrections are due to reasons other than obvious transcription errors, the reason for the corrections or additions shall also be documented.

This same process applies to adding additional information to a record. All additions made later than the initial must also be initialed or signed and dated.

SECTION 13
PREVENTIVE ACTION
(NELAC 5.4.11)

13.1 OVERVIEW

The laboratory's preventive action programs improve, or eliminate potential causes of nonconforming product and/or nonconformance to the quality system. This preventive action process is a proactive continuous process improvement activity that can be initiated through feedback from clients, employees, business providers, and affiliates. The QA Department has the overall responsibility to ensure that the preventive action process is in place, and that relevant information on actions is documented and submitted for management review.

Dedicating resources to an effective preventive action system emphasizes the laboratory's commitment to its Quality program. It is beneficial to identify and address negative trends before they develop into complaints, problems and corrective actions. Additionally, customer service and satisfaction can be improved through continuous improvements to laboratory systems.

Opportunities for improvement may be discovered during management reviews, the QA Metrics Report, internal or external audits, proficiency testing performance, client complaints, staff observation, etc.

The monthly QA Metrics Report shows performance indicators in all areas of the quality system. These areas include revised reports, corrective actions, audit findings, internal auditing and data authenticity audits, client complaints, PT samples, holding time violations, SOPs, ethics training, etc. These metrics are used to help evaluate quality system performance on an ongoing basis and provide a tool for identifying areas for improvement.

The laboratory's corrective action process is integral to implementation of preventive actions. A critical piece of the corrective action process is the implementation of actions to prevent further occurrence of a non-compliance event. Historical review of corrective action provides a valuable mechanism for identifying preventive action opportunities.

13.1.1 The following elements are part of a preventive action system:

- Identification of an opportunity for preventive action.
- Process for the preventive action.
- Define the measurements of the effectiveness of the process once undertaken.
- Execution of the preventive action.
- Evaluation of the plan using the defined measurements.
- Verification of the effectiveness of the preventive action.
- Close-Out by documenting any permanent changes to the Quality System as a result of the Preventive Action. Documentation of Preventive Action is incorporated into the monthly QA reports, corrective action process, and management review.

13.1.2 Any Preventive Actions undertaken or attempted shall be taken into account during the Annual Management Review (Section 16). A highly detailed recap is not required; a simple recount of success and failure within the preventive action program will provide management a measure for evaluation.

SECTION 14
CONTROL OF RECORDS
(NELAC 5.4.12)

14.1 OVERVIEW

The laboratory maintains a record system appropriate to its needs and that complies with applicable standards or regulations as required. The system produces unequivocal, accurate records that document all laboratory activities. The laboratory retains all original observations, calculations and derived data, calibration records and a copy of the analytical report for a minimum of five years after it has been issued.
The laboratory has established procedures for identification, collection, indexing, access, filing, storage, maintenance and disposal of quality and technical records. A record index is listed in Table 14-1. Quality records are maintained by the Quality Assurance Manager in a database, which is backed up as part of the regular network backup. Records are of two types; either electronic or hard copy paper formats depending on whether the record is computer or hand generated (some records may be in both formats). Technical records are maintained by the project management group.

Table 14-1. Record Index[1]

Technical Records	Official Documents	QA Records	Project Records	Administrative Records
Retention: 5 Years from analytical report issue*	5 Years from document retirement date*	5 Years from archival* **Data Investigation:** 5 years or the life of the affected raw data storage whichever is greater (beyond 5 years if ongoing project or pending investigation)	5 Years from analytical report issue*	**Personnel:** 7 Years (Human Resources Records must be maintained indefinitely). **Finance:** See Accounting and Control Procedures Manual
Raw Data Logbooks[2] Standards Certificates Analytical Records Lab Reports	Quality Assurance Manual	Internal and External Audits/ Responses	Sample receipt and COC Documentation	Finance and Accounting
	Work Instructions	Certifications	Contracts and Amendments	EH&S Manual, Permits, Disposal Records
	SOPs Manuals	Corrective/Preventive Action	Correspondence	Employee Handbook
		Management Reviews	QAPP	Personnel files, Employee Signature & Initials, Administrative Training Records (e.g., Ethics)
		Method & Software Validation, Verification data	SAP	
		Data Investigation	Telephone Logbooks	Administrative Policies
	Policies		Lab Reports	Technical Training Records

[1] Record Types encompass hardcopy and electronic records.
[2] Examples of Logbook types: Maintenance, Instrument Run, Preparation (standard and samples), Standard and Reagent Receipt, Archiving, Balance Calibration, Temperature (hardcopy or electronic records).
* Exceptions listed in Table 14-2.

14.1.1 For raw data and project records, record retention shall be calculated from the date the project report is issued. For other records, such as Controlled Documents, QA, or Administrative Records, the retention time is calculated from the date the record is formally retired. Records related to the programs listed in Table 14-2 have lengthier retention requirements and are subject to the requirements in Section 14.1.3.

14.1.2 Programs with Longer Retention Requirements

Some regulatory programs have longer record retention requirements than the standard record retention time. These are detailed in Table 14-2 with their retention requirements. In these cases, the longer retention requirement is enacted. If special instructions exist such that client data cannot be destroyed prior to notification of the client, the PM is contacted for authorization prior to destroying the data.

Table 14-2. Special Record Retention Requirements

Program	Retention Requirement
Drinking Water – All States	10 years (project records)
Housing and Urban Development (HUD) Environmental Lead Testing	10 years
Alaska	10 years
Louisiana – All	10 years
Michigan Department of Environmental Quality – all environmental data	10 years
Navy Facilities Engineering Service Center (NFESC)	10 years
NY Potable Water NYCRR Part 55-2	10 years
DOE Radiobioassay	Indefinite

14.1.3 The laboratory has procedures to protect and back-up records stored electronically and to prevent unauthorized access to or amendment of these records. All analytical data is maintained as hard copy or in a secure readable electronic format. For analytical reports that are maintained as copies in PDF format, refer to section 19.12.1 for more information.

14.1.4 The record keeping system allows for historical reconstruction of all laboratory activities that produced the analytical data, as well as rapid recovery of historical data. The history of the sample from when the laboratory took possession of the samples must be readily understood through the documentation. This shall include inter-laboratory transfers of samples and/or extracts.

- The records include the identity of personnel involved in sampling, sample receipt, preparation, or testing. All analytical work contains the initials (at least) of the personnel involved. The chain of custody would indicate the name of the sampler. If any sampling notes are provided with a work order, they are kept with this package.
- All information relating to the laboratory facilities equipment, analytical test methods, and related laboratory activities, such as sample receipt, sample preparation, or data verification are documented.
- The record keeping system facilitates the retrieval of all working files and archived records for inspection and verification purposes (e.g., set format for naming electronic files, set format for what is included with a given analytical data set).

- Changes to hardcopy records shall follow the procedures outlined in Section 12 and 19. Changes to electronic records in LIMS or instrument data are recorded in audit trails.

- The reason for a signature or initials on a document is clearly indicated in the records such as "sampled by," "prepared by," "reviewed by", or "Analyzed by".

- All generated data except those that are generated by automated data collection systems, are recorded directly, promptly and legibly in permanent dark ink.

- Hard copy data may be scanned into PDF format for record storage as long as the scanning process can be verified in order to ensure that no data is lost and the data files and storage media must be tested to verify the laboratory's ability to retrieve the information prior to the destruction of the hard copy that was scanned.

- Also refer to Section 19.13.1 'Computer and Electronic Data Related Requirements'.

14.2 TECHNICAL AND ANALYTICAL RECORDS

14.2.1 The laboratory retains records of original observations, derived data and sufficient information to establish an audit trail, calibration records, staff records and a copy of each analytical report issued, for a minimum of five years unless otherwise specified by a client or regulatory requirement. The records for each analysis shall contain sufficient information to enable the analysis to be repeated under conditions as close as possible to the original. The records shall include the identity of laboratory personnel responsible for performance of each analysis and reviewing results.

14.2.2 Observations, data and calculations are recorded at the time they are made and are identifiable to the specific task. The record keeping system shall fulfill the following requirements:

a) The records shall include the identity of personnel involved in preparation, calibration or testing.
b) All information relating to the laboratory facilities, equipment, analytical test methods, and related laboratory activities, such as sample receipt, sample preparation or data verification shall be documented.
c) All documentation entries shall be signed or initialed by responsible personnel.
d) All generated data except those that are generated by automated data collection systems, shall be recorded directly, promptly and legibly in permanent ink.
e) Entries in records shall not be obliterated by methods such as erasures, overwritten files or markings. All corrections to record-keeping errors shall be made by one line marked through the error. The individual making the correction shall sign (or initial) and date the correction (this is the person who authorized the change). Equivalent measures shall be taken for electronic records so as to not erase or overwrite the original information (audit trails).
f) Units shall accompany all numbers that are not dimensionless.
g) Use leading zeros for numbers less than one.
h) If a data correction is not self-explanatory, a written justification is required.

The term "logbook" may be defined as a hardcopy record or as an electronic record. Electronic logbooks shall be maintained and archived as required for all electronic records as described in the quality manuals and software SOPs. Note: verify with clients that require specific logbook entries that this definition of logbook is acceptable.

A log of names, initials and signatures for all individuals signing or initialing any laboratory record shall be maintained.

Should a record become lost or damaged, efforts will be made to regenerate the record by electronic means or transcription. It is the responsibility of the area supervisor where the record was originally generated to recapture the information and attempt to regenerate the record as much as possible. The regenerated record shall be reviewed and approved by the QA Manager or designee. Each page of the regenerated record shall be labeled "Regenerated Record". In cases where regeneration is not possible, an NCM shall be filed with the appropriate records.

14.2.3 Changes to hardcopy records shall follow the procedures outlined in Section 12 and 19. Changes to electronic records in LIMS or instrument data are recorded in audit trails. The essential information to be associated with analysis, such as strip charts, tabular printouts, computer data files, analytical notebooks, and run logs, include:

- laboratory sample ID code;
- Date of analysis: Time of analysis is also required if the holding time is seventy-two (72) hours or less, or when time critical steps are included in the analysis (e.g., drying times, incubations, etc.); instrumental analyses have the date and time of analysis recorded as part of their general operations. Where a time critical step exists in an analysis, location for such a time is included as part of the documentation in a specific logbook or on a bench sheet;
- Instrumentation identification and instrument operating conditions/parameters. Operating conditions/parameters are typically recorded in instrument maintenance logs where available.
- analysis type;
- all manual calculations and manual integrations;
- analyst's or operator's initials/signature;
- sample preparation including cleanup, separation protocols, incubation/ingrowth periods, ID codes, volumes, weights, instrument printouts, meter readings, calculations, reagents;
- test results;
- standard and reagent origin, receipt, preparation, and use;
- calibration criteria, frequency and acceptance criteria;
- data and statistical calculations, review, confirmation, interpretation, assessment and reporting conventions;
- QC protocols and assessment;
- electronic data security, software documentation and verification, software and hardware audits, backups, and records of any changes to automated data entries; and
- Method performance criteria including expected QC requirements. These are indicated both in the LIMS and on specific analytical report formats.

14.3 LABORATORY SUPPORT ACTIVITIES

In addition to documenting all the above-mentioned activities, the following are retained QA records and project records (previous discussions in this section relate where and how these data are stored):

- all original raw data, whether hard copy or electronic, for calibrations, samples and QC measures, including analysts' work sheets and data output records (chromatograms and other instrument response readout records);
- a written description or reference to the specific test method used which includes a description of the specific computational steps used to translate parametric observations into a reportable analytical value;
- copies of final reports;
- archived SOPs;
- correspondence relating to laboratory activities for a specific project;
- all corrective action reports, audits and audit responses;
- proficiency test results and raw data; and
- results of data review, verification, and crosschecking procedures

14.3.1 Sample Handling Records

Records of all procedures to which a sample is subjected while in the possession of the laboratory are maintained. These include but are not limited to records pertaining to:

- sample preservation including appropriateness of sample container and compliance with holding time requirement;
- sample identification, receipt, acceptance or rejection and login;
- sample storage and tracking including shipping receipts, sample transmittal / COC forms;
- procedures for the receipt and retention of samples, including all provisions necessary to protect the integrity of samples.

14.4 ADMINISTRATIVE RECORDS

The laboratory also maintains the administrative records in either electronic or hard copy form. Refer to Table 14-1.

14.5 RECORDS MANAGEMENT, STORAGE AND DISPOSAL

14.5.1 All records (including those pertaining to test equipment), certificates and reports are safely stored, held secure and in confidence to the client. Certification related records are available upon request.

14.5.2 All information necessary for the historical reconstruction of data is maintained by the laboratory. Records that are stored only on electronic media must be supported by the hardware and software necessary for their retrieval.

14.5.3 Records that are stored or generated by computers or personal computers have hard copy, write-protected backup copies, or an electronic audit trail controlling access.

The individual preparing records for submittal shall place all documents in a designated container for transfer to the storage area. The project files, data and data package identification information shall be entered into the archive database. This information is printed and included in the archive box.

All records, other than project records, shall be submitted using a record transmittal form. Hard copy records may be transferred to an electronic media for storage. The transmittal forms and information sheets shall accompany the records to the storage area. The archive custodian shall verify the contents of the document container to the transmittal form. If there are any discrepancies, the document container is returned to the submitter.

When the document container and forms are approved by the custodian, a box and location number shall be placed on the side of the container. The custodian shall complete the records transmittal forms by supplying the container and location number.

If amendments or supplemental information/data is generated, it shall be filed with the original records. The original version shall be kept intact and the supplemental data will be clearly identified if it is a correction to previously generated records.

The original forms shall remain in the container and a copy will be maintained in the archive file. The custodian will also enter the appropriate information into the archive database.

14.5.4 All records are stored and retained in such a way that they are secure and readily retrievable at the laboratory or an offsite location that provides a suitable environment. All records shall be protected against fire, theft, loss, environmental deterioration, and vermin. In the case of electronic records, electronic or magnetic sources, storage media are protected from deterioration caused by magnetic fields and/or electronic deterioration. Dual storage in a separate building or location can also satisfy this requirement.

Access to the data is limited to laboratory and company employees. When there is a need to retrieve a document for review in the record storage area, a request is given to the archive custodian or designee. The custodian will determine the location of the document container via the database and retrieve the container. An outcard listing the appropriate information shall replace the file(s) removed.

When removal from the storage area is necessary, a records request form shall be filled out. This form shall include the name of the person receiving the records, description of the records, the date removed and the signature of the person requesting the file. This form shall be filed in the archive file. An outcard listing the appropriate information shall replace the file(s) removed.

When the records are returned to the storage area, the custodian shall place them in the original location and remove the outcard. The custodian signs and dates the records request form and returns the form to the archive files.

A complete system to retrieve all electronically stored records shall be maintained at the laboratory. This system shall be tested every six months to ensure proper operation. This is accomplished by loading a file and obtaining a hard copy printout.

14.5.5 <u>Transfer of Ownership</u>

In the event that ownership of the laboratory is transferred or the laboratory is closed, TestAmerica shall ensure that the records are maintained or transferred according to client's instructions. Upon ownership transfer, record retention requirements shall be addressed in the ownership transfer agreement and the responsibility for maintaining archives is clearly established. In addition, in cases of bankruptcy, appropriate regulatory and state legal requirements concerning laboratory records must be followed. In the event of the closure of the laboratory, all records will revert to the control of the corporate headquarters. Should the entire company cease to exist, as much notice as possible will be given to clients and the accrediting bodies who have worked with the laboratory during the previous 5 years of such action.

14.5.6 Records Disposal

14.5.6.1 Records are removed from the archive and destroyed after 5 years unless otherwise specified by a client or regulatory requirement. On a project specific or program basis, clients may need to be notified prior to record destruction. Records are destroyed in a manner that ensures their confidentiality such as shredding, mutilation or incineration.

14.5.6.2 Electronic copies of records must be destroyed by erasure or physically damaging off-line storage media so no records can be read.

14.5.6.3 If a third party records management company is hired to dispose of records, a "Certificate of Destruction" is required.

14.5.6.4 The custodian shall transfer records to the custody of the client when requested. An external records release form shall be completed relinquishing custody of the records. The custodian will update the database accordingly.

14.5.6.5 Written approval must be received from all affected clients prior to disposal of any records associated with DOE analytical data.

SECTION 15
AUDITS
(NELAC 5.4.13)

15.1 INTERNAL AUDITS

Internal audits are performed to verify that the laboratory operations comply with the requirements of the lab's quality system and with the external quality programs under which the laboratory operates. Audits are planned and organized by the QA staff. Personnel conducting the audits should be independent of the area being evaluated. Auditors will have sufficient authority, access to work areas, and organizational freedom necessary to observe all activities affecting quality and to report the assessments to laboratory management and when requested to corporate management.

Audits are conducted and documented as described in the TestAmerica Corporate SOP on performing Internal Audits, SOP No. CA-Q-S-004. The types and frequency of routine internal audits are shown in Table 15-1. Special or ad hoc assessments may be conducted as needed under the direction of the QA Manager.

Table 15-1. Audit Types and Frequency

Description	Performed by	Frequency
Quality Systems	QA Department or Designee	All areas of the lab annually
QA Technical Audits - Evaluate raw data versus final reports - Analyst integrity - Data authenticity	QA Department or Designee	All methods within a 2 year period, with at least 15% of methods every quarter
SOP Method Compliance	Technical Manager	- All SOPs within a 2 year period - All new analysts or new analyst/method within 3 months of IDOC
Special	QA Department or Designee	Surveillance or spot checks performed as needed
Performance Testing	Analysts with QA oversight	- As dictated by regulatory requirements

15.1.1 ANNUAL QUALITY SYSTEMS AUDIT

An annual quality systems audit is required to ensure compliance to analytical methods and SOPs, the lab's Data Integrity and Ethics Policies, NELAC, AIHA and DoD ELAP quality systems, client and state requirements, and the effectiveness of the internal controls of the analytical process, including but not limited to data review, QCs, preventive action and corrective action. The completeness of earlier corrective actions is assessed. The audit is divided into modules for each operating or support area of the lab, and each module is comprehensive for a given area. The area audits may be done on a rotating schedule throughout the year to ensure adequate coverage of all areas. This schedule may change as situations in the laboratory warrant.

15.1.2 QA Technical Audits

QA technical audits are based on client projects, associated sample delivery groups, and the methods performed. Reported results are compared to raw data to verify the authenticity of results. The validity of QC results are compared to data qualifiers, footnotes, and case narratives. Documentation is assessed by examining logbooks and bench sheets. QA technical audits will include all methods within a two year period.

15.1.3 SOP Method Compliance

Compliance of all SOPs with the source method and compliance of the operational groups with the SOPs will be assessed by the Technical Manager or QA Manager at least every two years. The work of each newly hired analyst is assessed within 3 months of working independently, (e.g., completion of method IDOC). In addition, as analysts add methods to their capabilities, QA review of the analyst work products will be performed within 3 months of completing the documented training.

15.1.4 Special Audits

Special Audits are conducted on an as needed basis, generally as a follow up to specific issues such as client complaints, corrective actions, PT results, data audits, system audits, validation comments, regulatory audits or suspected ethical improprieties. Special audits are focused on a specific issue, and report format, distribution and timeframes are designed to address the nature of the issue.

15.1.5 Performance Testing

The laboratory participates in performance audits conducted through the analysis of PT samples provided by a third party. PT samples are treated as typical client samples in the production process. Where PT samples present unique issues, as with client samples, the production process may be modified with QA approval to accommodate special circumstances. The laboratory generally participates in the following types of PT studies:

Performance Evaluation Sample Program Description	Analysis Performed	Frequency of Participation
Environmental Resource Associates	Gamma, Iodine, Gross Alpha, Gross Beta, Tritium, Radium-226, Radium-228, Strontium-89 & 90, Natural Uranium	Semi-Annually for each study
DOE Environmental Laboratory Accreditation Program (DOELAP)	Natural Uranium, Americium, Gamma, Plutonium, Strontium, Isotopic Uranium, Isotopic Thorium, Tc-99, Np-237	Annual
Mixed Analyte Performance Evaluation Program	Americium, Gamma, Plutonium, H-3, Strontium, Isotopic Uranium, Ni-63, Fe-55	Semi-Annual
AIHA (IHPAT, BePAT, BAPAT)	Asbestos (PCM & PLM), metals	Semi-Annual

15.1.6 Safety Inspections

Safety inspections are conducted by the EHSC or designee. The inspection includes thorough examination of each laboratory and work area to note any safety concerns.

Radiological contamination smears shall be taken at the required frequencies. Should contamination be detected, actions shall be taken as described in the Radiation Protection Plan. Also, impact to samples shall be evaluated.

15.2 EXTERNAL AUDITS

External audits are performed when certifying agencies or clients conduct on-site inspections or submit performance testing samples for analysis. It is TestAmerica's policy to cooperate fully with regulatory authorities and clients. The laboratory makes every effort to provide the auditors with access to personnel, documentation and assistance. Laboratory supervisors are responsible for providing corrective actions to the QA Manager who coordinates the response for any deficiencies discovered during an external audit. Audit responses are due in the time allotted by the client or agency performing the audit. A copy of the audit report and the labs corrective action plan will be forwarded to Corporate Quality.

The Laboratory cooperates with clients and their representatives to monitor the laboratory's performance in relation to work performed for the client. The client may only view data and systems related directly to the client's work. All efforts are made to keep other client information confidential.

15.2.1 Confidential Business Information (CBI) Considerations

During on-site audits, auditors may come into possession of information claimed as business confidential. A business confidentiality claim is defined as "a claim or allegation that business information is entitled to confidential treatment for reasons of business confidentiality or a determination that such information is entitled to such treatment". When information is claimed as business confidential, the laboratory must place on or attach to the information at the time it is submitted to the auditor, a cover sheet, stamped or typed legend or other suitable form of notice, employing language such as "trade secret", "proprietary" or "company confidential". Confidential portions of documents otherwise not confidential must be clearly identified. CBI may be purged of references to client identity by the responsible laboratory official at the time of removal from the laboratory. However, sample identifiers may not be obscured from the information. Additional information regarding CBI can be found in the 2003 NELAC standard.

15.3 AUDIT FINDINGS

Audit Findings are documented using the corrective action process and database (refer to Section 12). The laboratory's corrective action responses for both types of audits may include action plans that can not be completed within a predefined timeframe. In these instances, a completion date must be set and agreed to by operations and the QA Manager.

Developing and implementing corrective actions to findings is the responsibility of the supervisor where the finding originated. Findings that are not corrected by specified due dates are reported monthly to management in the QA monthly report. A copy of the audit report and the labs corrective action plan will be forwarded to Corporate Quality.

If any audit finding casts doubt on the effectiveness of the operations or on the correctness or validity of the laboratory's test results, the laboratory shall take timely corrective action, and shall notify clients in writing if the investigations show that the laboratory results have been affected. Once corrective action is implemented, a follow-up audit is scheduled to ensure that the problem has been corrected.

Clients must be notified promptly in writing, of any event such as the identification of defective measuring or test equipment that casts doubt on the validity of results given in any test report or amendment to a test report. The investigation must begin within 24-hours of discovery of the problem and all efforts are made to notify the client within two weeks after the completion of the investigation.

For DOE and other programs where required, the client will be informed of the proposed corrective action prior to initiating the change.

SECTION 16
MANAGEMENT REVIEWS
(NELAC 5.4.14)

16.1 QUALITY ASSURANCE REPORT

A comprehensive QA Report shall be prepared each month by the laboratory's QA Department and forwarded to the Laboratory Director, Quality Director and General Manager. All aspects of the QA system are reviewed to evaluate the suitability of policies and procedures. During the course of the year, the Laboratory Director, General Manager or Corporate QA may request that additional information be added to the report.

On a monthly basis, Corporate QA compiles information from all the monthly laboratory reports. The Corporate Quality Directors prepare a report that includes a compilation of all metrics and notable information and concerns regarding the QA programs within the laboratories. The report also includes a listing of new regulations that may potentially impact the laboratories. This report is presented to the Senior Management Team and General Managers.

16.2 ANNUAL MANAGEMENT REVIEW

The lab management team conducts an annual review of its quality systems and LIMS to ensure its continuing suitability and effectiveness in meeting client and regulatory requirements and to introduce any necessary changes or improvements. It also provides a platform for defining quality goals & objectives. Corporate Operations and Corporate QA personnel may be included in this meeting at the discretion of the Laboratory Director. The LIMS review consists of examining any audits, complaints or concerns that have been raised through the year that are related to the LIMS. The laboratory will summarize any critical findings that cannot be solved by the lab and report them to Corporate IT.

This management systems review (Corporate SOP CA-Q-S-008 and Work Instruction CA-Q-WI-020) uses information generated during the preceding year to assess the "big picture" by ensuring that routine actions taken and reviewed on a monthly basis are not components of larger systematic concerns. The monthly review should keep the quality systems current and effective. Therefore the annual review is a formal senior management process to review specific existing documentation. This review shall not be considered an internal audit. Significant issues from the following documentation are compiled or summarized by the QA Manager prior to the review meeting:

- Matters arising from the previous annual review.
- Prior Monthly QA Reports issues (including results of recent internal audits).
- Laboratory QA Metrics.
- Review of report reissue requests.
- Review of client feedback and complaints.
- Review of assessments by external bodies.
- Issues arising from any prior management or staff meetings.
- Issues that may be raised from prior Senior Management team meetings including:
    - Adequacy of staff, equipment and facility resources.
    - Adequacy of policies and procedures.
    - Future plans for resources and testing capability and capacity.

- The annual internal double blind PT program sample performance (if performed) and other PT program or interlaboratory comparison programs,
- Compliance to the Ethics Policy and Data Integrity Plan. Including any evidence/incidents of inappropriate actions or vulnerabilities related to data Integrity.
- Compliance to the health and safety program including hazardous and radioactive materials management functions.

A report is generated by the QA Manager and management. The report is distributed to the appropriate General Manager and the Quality Director. The report includes, but is not limited to:

- The date of the review and the names and titles of participants.
- A reference to the existing data quality related documents and topics that were reviewed.
- Quality system or operational changes or improvements that will be made as a result of the review (e.g., an implementation schedule including assigned responsibilities for the changes).

Any corrective actions that arise from the management review shall be recorded. The Laboratory Director shall ensure that those actions are carried out within an appropriate and agreed timescale.

Changes to the quality systems requiring update to the laboratory QA Manual shall be included in the next revision of the QA manual.

16.3 POTENTIAL INTEGRITY RELATED MANAGERIAL REVIEWS

Potential integrity issues (data or business related) must be handled and reviewed in a confidential manner until such time as a follow-up evaluation, full investigation, or other appropriate actions have been completed and issues clarified. TestAmerica's Corporate Data Investigation/ Recall SOP shall be followed (SOP No. CA-L-S-001). All investigations that result in finding of inappropriate activity are to be documented ,and documentation shall include any disciplinary actions involved, corrective actions taken, and all appropriate notifications of clients. The documentation shall be maintained for a minimum of five years, or the same as client records if longer.

The COO, VP of Quality & Technical Services, General Managers and Quality Directors receive a monthly report from the VP of Quality and Technical Services summarizing any current data integrity or data recall investigations as described in SOP No. CA-L-S-001. The General Managers are also made aware of progress on these issues for their specific labs.

SECTION 17
PERSONNEL
(NELAC 5.5.2)

17.1 OVERVIEW

The laboratory's management believes that its highly qualified and professional staff is the single most important aspect in assuring a high level of data quality and service. The staff consists of professionals and support personnel as outlined in the organization chart. A current organization chart is maintained in the QA records. Refer to Figure 4-1 for an example.

All personnel must demonstrate competence in the areas where they have responsibility. Any staff that is undergoing training shall have appropriate supervision until they have demonstrated their ability to perform their job function on their own. Staff shall be considered qualified for their tasks based on appropriate education, training, experience and/or demonstrated skills as required.

The laboratory employs sufficient personnel with the necessary education, training, technical knowledge and experience for their assigned responsibilities.

All personnel are responsible for complying with all QA/QC requirements that pertain to the laboratory and their area of responsibility. Each staff member must have a combination of experience and education to adequately demonstrate a specific knowledge of their particular area of responsibility. Technical staff must also have a general knowledge of lab operations, test methods, QA/QC procedures and records management.

Laboratory management is responsible for formulating goals for lab staff with respect to education, training and skills and ensuring that the laboratory has a policy and procedures for identifying training needs and providing training of personnel. The training shall be relevant to the present and anticipated responsibilities of the lab staff.

The laboratory only uses personnel that are employed by or under contract to, the laboratory. Contracted personnel, when used, must meet competency standards of the laboratory and work in accordance to the laboratory's quality system.

Personnel dealing with sample receipt, radioactive waste management and materials shipping shall be trained in waste management, shipping (49 CFR 172) and handling, and radioactive material control, as appropriate.

17.2 EDUCATION AND EXPERIENCE REQUIREMENTS FOR TECHNICAL PERSONNEL

Selection of qualified candidates for laboratory employment begins with documentation of minimum education, training, and experience prerequisites needed to perform the prescribed task. Minimum education and training guidelines for TestAmerica employees are outlined in job descriptions.

The laboratory maintains job descriptions for all personnel who manage, perform or verify work affecting the quality of the environmental and radiobioassay testing the laboratory performs. Job Descriptions are located on the TestAmerica intranet site's Human Resources web-page (Also see Section 4 for position descriptions/responsibilities).

Experience and specialized training are accepted in lieu of a college degree (basic lab skills such as using a balance, quantitation techniques, etc. are also considered).

17.3 TRAINING

The laboratory is committed to furthering the professional and technical development of employees at all levels. All personnel are to be trained appropriately for each task they are required to perform, prior to beginning the task.

Orientation to the laboratory's policies and procedures, in-house method training, and employee attendance at outside training courses and conferences all contribute toward employee proficiency. Below are examples of various areas of required employee training for all personnel including full-time, part-time, temporary, contracted and administrative:

Required Training	Time Frame*	Employee Type
Environmental Health & Safety	Prior to lab work	All
Ethics – New Hires	1 week of hire	All
Ethics - Comprehensive	90 days of hire	All
Data Integrity	30 days of hire	Technical and PMs
Quality Assurance	90 days of hire	All
Ethics – Comprehensive Refresher	Annually	All
Initial Demonstration of Capability (IDOC)	Prior to unsupervised method performance	Technical

The laboratory maintains records of relevant authorization/competence, education, professional qualifications, training, skills and experience of technical personnel (including contracted personnel) as well as the date that approval/authorization was given. These records are kept on file at the laboratory. Also refer to "Demonstration of Capability" (DOC) in Section 19.

The training of technical staff is kept up to date by:

- Each employee must have documentation in their training file that they have read, understood and agreed to follow the most recent version of the laboratory QA Manual and SOPs in their area of responsibility. This documentation is updated as SOPs are updated.
- Documentation from any training courses or workshops on specific equipment, analytical techniques or other relevant topics are maintained in their training file.
- Documentation of proficiency (refer to Section 19).
- An Ethics Agreement signed by each staff member (renewed each year) and evidence of annual ethics training.
- A Confidentiality Agreement signed by each staff member signed at the time of employment.
- Human Resources maintains documentation and attestation forms on employment status & records; benefit programs; timekeeping/payroll; and employee conduct (e.g., ethics). This information is maintained in the employee's secured personnel file.
- Evidence of successful training could include such items as:
    - Adequate documentation of training within operational areas, including one-on-one technical training for individual technologies, and particularly for people cross-trained.
    - Analysts knowledge to refer to QA Manual for quality issues.

- Analysts following SOPs, i.e., practice matches SOPs.
- Analysts regularly communicate to supervisors and QA if SOPs need revision, rather than waiting for auditors to find problems.

Within the first quarter of initial employment, an associate shall receive training on the Quality Assurance Program. In order to demonstrate qualification, each associate shall be required to take a QA examination. A score of 70% correct is considered acceptable. If an associate's test does not meet the 70% criteria, they shall receive further instruction or be allowed to retake the exam. An associate is not considered qualified to perform independently until they have received a passing score.
For non-analytical procedures, the trainee is assigned to a qualified associate and will work under their direction until such time that in the trainer's and supervisor's judgment the associate is qualified to work independently. In some cases this may require only reading and understanding the requirements described in the SOP.

For analytical procedures, the trainee shall observe and work under the direction of a qualified analyst. During this training period, the trainer shall enter their initials along with the trainee's signature/initials on the Internal Chain of Custody (ICOC) documentation. When the trainee has successfully completed the DOC study, they may work independently on client samples.

When training sessions are given, each associate shall sign an attendance sheet as evidence of their attendance. A brief description of the topics covered will be on or attached to the attendance sheet. The attendance sheet shall be kept in the Quality files.

When an associate completes a course, class or seminar given by an external agency, the associate shall provide proof of attendance to place in the training files.

After the analyst has been trained, a copy of the first PT results for each applicable test shall be included in the individual's training record.

All training forms and attendance sheets shall have the time duration of the training.

Retraining or reassignment of an associate may be required if determined by the supervisor, QA Manager, Technical Manager or Laboratory Director. Examples of instance where this is warranted are:

a) QC results are outside expected limits for that individual's data exclusively.
b) The individual omits a step or performs the step incorrectly.

If the associate is reassigned for the reasons listed above, the associate will be disqualified for that SOP. The supervisor may choose to disqualify the associate for related SOPs depending on the circumstances. If at a later date the associate has gained the experience to requalify, as determined by the supervisor, the DOC process shall be followed.

17.3.1 Annual Requalification

Annual continued proficiency will be documented by at least one of the following:

a) Acceptable performance of a blind sample (single blind to the analyst)
b) Another demonstration of capability
c) Successful analysis of a blind performance sample on a similar test method using the same technology would only require documentation for one of the test methods
d) At least four LCSs with acceptable levels of precision and accuracy
e) If a-d cannot be performed, analysis of authentic samples that have been analyzed by another trained analyst with statistically indistinguishable results.

17.4 DATA INTEGRITY AND ETHICS TRAINING PROGRAM

Establishing and maintaining a high ethical standard is an important element of a Quality System. Ethics and data integrity training is integral to the success of TestAmerica and is provided for each employee at TestAmerica. It is a formal part of the initial employee orientation within 1 week of hire, comprehensive training within 90 days, and an annual refresher for all employees. Senior management at each facility performs the ethics training for their staff.

In order to ensure that all personnel understand the importance TestAmerica places on maintaining high ethical standards at all times; TestAmerica has established a Corporate Ethics Policy No. CA-L-P-001 and an Ethics Statement. All initial and annual training is documented by signature on the signed Ethics Policy and Code of Ethical Conduct demonstrating that the employee has participated in the training and understands their obligations related to ethical behavior and data integrity.

Violations of this Ethics Policy will not be tolerated. Employees who violate this policy will be subject to disciplinary actions up to and including termination. Criminal violations may also be referred to the Government for prosecution. In addition, such actions could jeopardize TestAmerica's ability to do work on Government contracts, and for that reason, TestAmerica has a Zero Tolerance approach to such violations.

Employees are trained as to the legal and environmental repercussions that result from data misrepresentation. Key topics covered in the presentation include:

- Organizational mission and its relationship to the critical need for honesty and full disclosure in all analytical reporting.
- Ethics Policy
- How and when to report ethical/data integrity issues. Confidential reporting.
- Record keeping.
- Discussion regarding data integrity procedures.
- Specific examples of breaches of ethical behavior (e.g. peak shaving, altering data or computer clocks, improper macros, etc., accepting/offering kickbacks, illegal accounting practices, unfair competition/collusion)
- Internal monitoring. Investigations and data recalls.
- Consequences for infractions including potential for immediate termination, debarment, or criminal prosecution.
- Importance of proper written narration / data qualification by the analyst and project manager with respect to those cases where the data may still be usable but are in one sense or another partially deficient.

Additionally, a data integrity hotline (1-800-736-9407) is maintained by TestAmerica and administered by the Corporate Quality Department.

SECTION 18
ACCOMMODATIONS AND ENVIRONMENTAL CONDITIONS
(NELAC 5.5.3)

18.1 OVERVIEW

TestAmerica Richland laboratory is a 33,000 ft^2 secure laboratory facility with controlled access and designed to accommodate an efficient workflow and to provide a safe and comfortable work environment for employees. Access is controlled by various measures.

The laboratory is equipped with structural safety features. Each employee is familiar with the location, use, and capabilities of general and specialized safety features associated with their workplace. The laboratory provides and requires the use of protective equipment including safety glasses, protective clothing, gloves, etc. OSHA and other regulatory agency guidelines regarding required amounts of bench and fume hood space, lighting, ventilation (temperature and humidity controlled), access, and safety equipment are met or exceeded.

Traffic flow through sample preparation and analysis areas is minimized to reduce the likelihood of contamination. Adequate floor space and bench top area is provided to allow unencumbered sample preparation and analysis space. Sufficient space is also provided for storage of reagents glassware, and portable equipment. Ample space is also provided for sample storage before analysis and archival storage of samples after analysis. Laboratory HVAC and deionized water systems are designed to minimize potential trace contaminants.

The laboratory is separated into specific areas for sample receiving, sample preparation, sample separation, sample analysis, radiobioassay, inorganic sample analysis and administrative functions.

18.2 ENVIRONMENT

Laboratory accommodation, test areas, energy sources, lighting are adequate to facilitate proper performance of tests. The facility is equipped with heating, ventilation, and air conditioning (HVAC) systems appropriate to the needs of environmental testing performed at this laboratory.

The environment in which these activities are undertaken does not invalidate the results or adversely affect the required accuracy of any measurements.

The laboratory provides for the effective monitoring, control and recording of environmental conditions that may affect the results of environmental tests as required by the relevant specifications, methods, and procedures.

When any of the method or regulatory required environmental conditions change to a point where they may adversely affect test results, analytical testing will be discontinued until the environmental conditions are returned to the required levels.

Environmental conditions of the facility housing the computer network and LIMS are regulated to protect against raw data loss.

18.3 WORK AREAS

There is effective separation between laboratory activities when warranted. Examples include:

Bioassay and Environmental sample processing areas.

Urine and Fecal processing

Low level and Intermediate level processing

Segregation of alpha spectrometry detectors

Access to and use of all areas affecting the quality of analytical testing is defined and controlled by secure access to the laboratory building as described below in the Building Security section.

Adequate measures are taken to ensure good housekeeping in the laboratory and to ensure that any contamination does not adversely affect data quality. These measures include regular cleaning to control dirt and dust within the laboratory.

Work areas are available to ensure an unencumbered work area. Work areas include:

- Access and entryways to the laboratory.
- Sample receipt areas.
- Sample storage areas.
- Chemical, radiochemical and waste storage areas.
- Data handling and storage areas.
- Sample processing areas.
- Sample analysis areas.

18.4 FLOOR PLAN

A floor plan can be found in Appendix 1.

18.5 BUILDING SECURITY

All visitors to the laboratory facility shall enter through the main entrance and register at the reception desk. Visitors will be issued a visitor's badge, and be escorted by an associate at all times. Associates shall not admit visitors through any door except the main entrance. Upon completion of the visit, visitors shall return the visitors badge to the receptionist or their escort. It is the responsibility of the escort to see that the badge is returned.

Persons delivering samples and supplies to the laboratory may be admitted through the receiving door or other entrance that facilitates delivery. Delivery personnel are not required to obtain a badge.

Contractors and service personnel shall obtain a contractors badge with a key card. The contractors and service personnel may move about the building unescorted.

Associates shall be issued a key card on their first day of work. All associates shall use this key card upon entering the facilities. Key cards shall not be lent or borrowed from other associates. If a key card is lost, the associate shall immediately notify the Human Resources Manager who is responsible for assuring that the lost card is invalidated and a replacement issued. If a key card is forgotten, a temporary card may be issued. The associate shall return the temporary card upon the completion of work for that day.

Any associate who discovers a visitor who is unbadged or unescorted shall escort that person to the reception desk. The person shall be badged or the proper escort located.

Facility breaches of security after business hours are identified with an audible alarm and a dial out alarm. The contracted security firm will call the laboratory facility to ascertain if the building is occupied. If there is no answer, the security firm shall use the call out list provided to them by the laboratory.

Upon notification of an alarm, if evidence of criminal activity is discovered appropriate law enforcement shall be notified. If an associate suspects that samples have been tampered with, they shall report that information immediately to supervision. The appropriate manager shall determine if samples have actually been affected and an evaluation as to the possible impact to data.

SECTION 19
TEST METHODS AND METHOD VALIDATION
(NELAC 5.5.4)

19.1 OVERVIEW

The laboratory uses analytical methods that are appropriate to meet our clients' requirements and that are within the scope of the laboratory's capabilities. These include sampling, handling, transport, storage and preparation of samples, analytical equipment and, where appropriate, an estimation of the measurement of uncertainty as well as statistical techniques for analysis of environmental data.

The laboratory takes into account many factors in developing environmental test methods and procedures, in the training and qualification of personnel, and in the selection and calibration of the equipment it uses. Factors include staff education and training, laboratory environmental conditions, available test methods and validation, equipment selection, measurement traceability, sampling techniques and sample handling.

Instructions are available in the laboratory for the operation of equipment as well as for the handling and preparation of samples. All instructions, SOPs, reference methods and manuals relevant to the working of the laboratory are readily available to all staff. Deviations from published methods are documented (with justification) in the laboratory's approved SOPs. SOPs are submitted to clients for review at their request. Significant deviations from published methods require client approval and regulatory approval where applicable.

19.2 STANDARD OPERATING PROCEDURES

The laboratory maintains SOPs that accurately reflect all phases of the laboratory such as assessing data integrity, corrective actions, reporting analytical results, handling customer complaints as well as all analytical methods and sampling procedures. The method SOPs are derived from the most recently promulgated/approved, published methods and are specifically adapted to the laboratory facility, where applicable. Modifications or clarifications to published methods are clearly noted in the SOPs. All SOPs are controlled in the laboratory:

- All SOPs contain a revision number, effective date, and appropriate approval signatures. Controlled copies are available to all staff.
- Procedures for writing an SOP are incorporated by reference to TestAmerica's corporate SOP: CW-Q-S-002 (Writing a Standard Operating Procedure)
- SOPs are reviewed at a minimum of every 2 years (annually for Drinking Water and technical SOPs used for DoD work), and where necessary, revised to ensure continuing suitability and compliance with applicable requirements.
- The SOPs are organized for easy retrieval using a numbering system that includes a two-letter code identifying the laboratory, a two-letter code for the type of task along with a sequential number.

19.3 LABORATORY METHODS MANUAL

For each test method, the laboratory shall have available the published referenced method as well as the laboratory developed SOP. The laboratory's methods manual consists of a collection of published methods, available for reference in the Technical Manager's office.

Note: If more stringent standards or requirements are included in a mandated test method or regulation than those specified in this manual, the laboratory shall demonstrate that such requirements are met. If it is not clear which requirements are more stringent, the standard from the method or regulation is to be followed. Any exceptions or deviations from the referenced methods or regulations are noted in the specific analytical SOP.

19.4 SELECTION OF METHODS

Since numerous methods and analytical techniques are available, continued communication between the client and laboratory is imperative to assure the correct methods are utilized. Once client methodology requirements are established, this and other pertinent information is summarized by the Project Manager. These mechanisms ensure that the proper analytical methods are applied when the samples arrive for log-in. For non-routine analytical services (e.g., special matrices, non-routine compound lists, etc.), the method of choice is selected based on client needs and available technology. The methods selected should be capable of measuring the specific parameter of interest, in the concentration range of interest, and with the required precision and accuracy.

19.4.1 Sources of Methods

Routine analytical services are performed using standard EPA-approved methodology. In some cases, modification of standard approved methods may be necessary to provide accurate analyses of particularly complex matrices. When the use of specific published methods for sample analysis is mandated through project or regulatory requirements, only those methods shall be used without modification unless approval is granted by the client prior to use.

When clients do not specify the method to be used or methods are not required, the methods used will be clearly validated and documented in an SOP and available to clients and/or the end user of the data.

The analytical methods used by the laboratory are those currently accepted and approved by the EPA and the state or territory from which the samples were collected. Reference methods include:

- *Prescribed Procedures for Measurement of Radioactivity in Drinking Water, EPA-600/4-80-032, August 1980.*
- *Eastern Environmental Radiation Facility Radiochemistry Procedures Manual, EPA, PB84-215581, June 1984.*
- *HASL-300 28th Edition, Environmental Measurements Laboratory (EML), 1997.*
- *Analytical Method for Determination of Asbestos Fibers in Water, EPA-600/4-83, September 1983.*
- *Determination of Asbestos Structures Over 10-mm in Length in Drinking Water, EPA-600/R-94-134, June 1994.*
- *Technical Notes on Drinking Water Methods, EPA-600/R94-173, October 1994*
- *NIOSH Manual of Analytical Methods, 4th ed., August 1994.*
- *Standard Methods for the Examination of Water and Wastewater, 18th/19th /20th edition; Eaton, A.D. Clesceri, L.S. Greenberg, A.E. Eds; American Water Works Association, Water Pollution Control Federation, American Public Health Association: Washington, D.C.*
- *Annual Book of ASTM Standards, American Society for Testing & Materials (ASTM), Philadelphia, PA.*
- *Manual for the Certification of Laboratories Analyzing Drinking Water (EPA 815-R-05-004, January 2005)*
- *Code of Federal Regulations (CFR) 40, Parts 136, 141, 172, 173, 178, 179 and 261*
- *SW-846-Test Methods for Evaluating Solid Waste, Physical/Chemical Methods*

The laboratory reviews updated versions to all the aforementioned references for adaptation based upon capabilities, instrumentation, etc., and implements them as appropriate. As such, the laboratory strives to perform only the latest versions of each approved method as regulations allow or require.

Other reference procedures for non-routine analyses may include methods established by specific states, ASTM or equipment manufacturers. Sample type, source, and the governing regulatory agency requiring the analysis will determine the method utilized.

The laboratory shall inform the client when a method proposed by the client may be inappropriate or out of date. After the client has been informed, and they wish to proceed contrary to the laboratory's recommendation, it will be documented.

19.4.2 Demonstration of Capability

Before the laboratory may institute a new method and begin reporting results, the laboratory shall confirm that it can properly operate the method via performance of a DOC. In general, this demonstration does not test the performance of the method in real world samples, but in an applicable and available clean matrix sample. If the method is for the testing of analytes that are not conducive to spiking, DOC may be performed on QC samples. If required, a DOC shall be performed on representative matrix samples.

A DOC is performed whenever there is a change in instrument type, method or personnel.

The Lab must have an approved SOP, demonstrate satisfactory performance and conduct applicable detection limit studies.

The initial DOC must be thoroughly documented and approved by the Technical Manager and QA Manager prior to independently analyzing client samples. All associated documentation must be retained in accordance with the laboratories archiving procedures.

19.4.3 Initial Demonstration of Capability Procedures

19.4.3.1 The spiking standard used must be prepared independently from those used in instrument calibration.

19.4.3.2 The analyte(s) shall be diluted in a volume of clean matrix sufficient to prepare four aliquots at the concentration specified by a method or the laboratory SOP.

19.4.3.3 At least four aliquots shall be prepared and analyzed according to the test method (either concurrently or over a period of days).

19.4.3.4 Using all of the results, calculate the mean recovery in the appropriate reporting units and the standard deviations for each parameter of interest.

19.4.3.5 When it is not possible to determine the mean and standard deviations, such as for presence, absence and logarithmic values, the laboratory will assess performance against criteria described in the Method SOP.

19.4.3.6 Compare the information obtained above to the corresponding acceptance criteria for precision and accuracy in the test method (if applicable) or in laboratory generated acceptance criteria (LCS or interim criteria) if there is no mandatory criteria established. If any one of the parameters do not meet the acceptance criteria, the performance is unacceptable for that parameter.

19.4.3.7 When one or more of the tested parameters fail at least one of the acceptance criteria, the analyst must proceed according to either option listed below:

- Locate and correct the source of the problem and repeat the test for all parameters of interest beginning with 19.4.3.3 above.
- Beginning with 19.4.3.3 above, repeat the test for all parameters that failed to meet criteria. Repeated failure, however, will confirm a general problem with the measurement system. If this occurs, locate and correct the source of the problem and repeat the test for all analytes of interest beginning with 19.4.3.1 above.

Note: Results of successive LCS analyses can be used to fulfill the DOC requirement.

A certification statement (see Figure 19-1 as an example) shall be used to document the completion of each IDOC. A copy of the certification is archived in the analyst's procedure file.

19.5 LABORATORY DEVELOPED METHODS AND NON-STANDARD METHODS

From time to time, the laboratory may determine that a newly-developed method is needed. Development of test methods must be a planned activity assigned to qualified personnel equipped with adequate resources. Plans must be reviewed and updated as necessary. Effective communication between all affected personnel is needed.

Any new method developed by the laboratory must be fully defined in an SOP and validated by qualified personnel with adequate resources to perform the method. Method specifications and the relation to client requirements must be clearly conveyed to the client if the method is a non-standard method (not a published or routinely accepted method). The client must also be in agreement to the use of the non-standard method.

19.6 VALIDATION OF METHODS

Validation is the confirmation by examination and the provision of objective evidence that the particular requirements for a specific intended use are fulfilled.

All non-standard methods, laboratory designed/developed methods, standard methods used outside of their scope, and major modifications to published methods must be validated to confirm they are fit for their intended use. The validation will be as extensive as necessary to meet the needs of the given application. The results are documented with the validation procedure used and contain a statement as to the fitness for use.

19.6.1 Method Validation and Verification Activities for All New Methods

While method validation can take various courses, the following activities can be required as part of method validation. Method validation records are designated QC records and are archived accordingly.

19.6.1.1 Determination of Method Selectivity

Method selectivity is the demonstrated ability to discriminate the analyte(s) of interest from other analytes or interferences in the specific matrix or matrices. In some cases to achieve the required selectivity for an analyte, a confirmation or separation analysis is required as part of the method.

19.6.1.2 Determination of Method Sensitivity

Sensitivity can be both estimated and demonstrated. Whether a study is required to estimate sensitivity depends on the level of method development required when applying a particular measurement system to a specific set of samples. Where estimations and/or demonstrations of sensitivity are required by regulation or

client agreement, such as the procedure in 40 CFR 136 Appendix B, under the Clean Water Act, these shall be followed.

The Minimum Detectable Concentration or MDC for a radionuclide by radiochemical measurement is determined from the blank/background variability associated with the appropriate detector, the detector efficiency, sample aliquot size and chemical yield. The background variability is proportional to the sample count time.

NOTE: The background variability is based on the analytical test and derived by: 1) using sample specific parameters, or 2) process blank specific parameters, or 3) by averaging the multiple MDCs derived in 1 or 2.

The MDC is calculated for individual samples (depending on counting technique) using the Environmental Protection Agency's definition as found in the Health Physics Society (HPS) Committee Report – HPSR-1 "Upgrading Environmental Radiation Data", EPA 520/1-80-012 published in 1980. The MDC is expected to be less than the Client Required Detection Limit (CRDL). Cesium-137 is the MDC analyte of interest for gamma evaluation.

The MDC is calculated periodically for each group of blank QC samples containing a similar analyte and matrix which has been analyzed using equivalent procedures. Reagent blanks are more frequently analyzed to obtain the group MDC, but wherever possible, matrix blanks are analyzed. The specific parameters are defined for Radiobioassay, in HPS Standard N13.30, 1996, Performance Criteria for Radiobioassay and for Environmental measurements in ANSI standard N42.23, 1996, Measurement and Associated Instrumentation Quality Assurance for Radioassay Laboratories. The MDC is expected to be less than the CRDL for the analyte.

If the sample MDC is greater than the CRDL or RL, the Data Reviewer shall examine the sample volume/weight, counting time, tracer yield and/or other relevant factors. The Data Reviewer shall decide the corrective action which may include reanalysis, recounting or data acceptance and document per laboratory procedure.

19.6.1.3 Relationship of Limit of Detection to the Quantitation Limit

An important characteristic of expression of sensitivity is the difference in the Limit of Detection (LOD) and the quantitation limit (QL). The LOD is the minimum level at which the presence of an analyte can be reliably concluded. The QL is the minimum concentration of analyte that can be quantitatively determined with acceptable precision and bias. For most instrumental measurement systems, there is a region where semi-quantitative data is generated around the LOD (both above and below the estimated MDL or LOD) and below the QL. In this region, detection of an analyte may be confirmed but quantification of the analyte is unreliable within the accuracy and precision guidelines of the measurement system. When an analyte is detected below the QL, and the presence of the analyte is confirmed by meeting the qualitative identification criteria for the analyte, the analyte can be reliably reported, but the amount of the analyte can only be estimated. If data is to be reported in this region, it must be done so with a qualification that denotes the semi-quantitative nature of the result.

19.6.1.4 Determination of Interferences

A determination that the method is free from interferences in a blank matrix is performed.

19.6.1.5 Determination of Range

Where appropriate to the method, the quantitation range is determined by comparison of the response of an analyte in a curve to established or targeted criteria. Generally the upper quantitation limit is defined by

highest acceptable calibration concentration. The lower quantitation limit or QL cannot be lower than the lowest non-zero calibration level, and can be constrained by required levels of bias and precision. For radiochemical measurements, the QL is typically instrument or method driven.

19.6.1.6 Determination of Accuracy and Precision

Accuracy and precision studies are generally performed using replicate analyses, with a resulting percent recovery and measure of reproducibility (standard deviation, relative standard deviation) calculated and measured against a set of target criteria.

19.6.1.7 Documentation of Method

The method is formally documented in an SOP. If the method is a minor modification of a standard laboratory method that is already documented in an SOP, an SOP Attachment describing the specific differences in the new method is acceptable in place of a separate SOP.

19.6.1.8 Continued Demonstration of Method Performance

Continued demonstration of Method Performance is addressed in the SOP. Continued demonstration of method performance is generally accomplished by batch specific QC samples such as LCS, method blanks or PT samples.

19.7 METHOD DETECTION LIMITS / LIMIT OF DETECTION

The MDL are initially determined in accordance with 40 CFR 136, Appendix B or alternatively by other technically acceptable practices that have been accepted by regulators. MDL is also sometimes referred to as Limit of Detection. The MDL theoretically represents the concentration level for each analyte within a method at which the Analyst is 99% confident that the true value is not zero. The MDL is determined for each analyte initially during the method validation process and updated as required in the analytical methods, whenever there is a significant change in the procedure or equipment, or based on project specific requirements. Generally, the analyst prepares at least seven replicates of solution spiked at one to five times the estimated method detection limit (most often at the lowest standard in the calibration curve) into the applicable matrix with all the analytes of interest. Each of these aliquots is extracted (including any applicable clean-up procedures) and analyzed in the same manner as the samples. Where possible, the seven replicates should be analyzed over 2-4 days to provide a more realistic MDL. Refer to the Corporate SOP No. CA-Q-S-006 for details on the laboratory's MDL process.

19.8 VERIFICATION OF DETECTION AND REPORTING LIMITS

For non-radiochemical analyses, once the MDL is determined, it must be verified on each instrument used for the given method. TestAmerica defines the DoD QSM Detection Limit (DL) as being equal to the MDL. TestAmerica also defines the DoD QSM LOD as being equal to the lowest concentration standard that successfully verifies the MDL, also referred to as the MDLV standard. MDL and MDLV standards are extracted/digested and analyzed through the entire analytical process. The MDL and MDLV determinations do not apply to methods that are not readily spiked (e.g. pH, turbidity, etc.) or where the lab does not report to the MDL. If the MDLV standard is not successful, then the laboratory will redevelop their MDL. Initial and quarterly verification is required for all methods listed in the laboratory's DoD Environmental Laboratory Accreditation Program (DoD ELAP) Scope of Accreditation.

The laboratory quantitation limit is equivalent to the DoD Limit of Quantitation (LOQ), which is at a concentration equal to or greater than the lowest non-zero calibration standard. The DoD QSM requires the laboratory to perform an initial characterization of the bias and precision at the LOQ and quarterly LOQ verifications thereafter. If the quarterly verification results are not consistent with three-standard deviation

confidence limits established initially, then the bias and precision will be reevaluated and clients contacted for any on-going projects. For DoD projects, TestAmerica makes a distinction between the RL and the LOQ. The RL is a level at or above the LOQ that is used for specific project reporting purposes, as agreed to between the laboratory and the client. The RL cannot be lower than the LOQ concentration, but may be higher.

19.9 ESTIMATION OF UNCERTAINTY OF MEASUREMENT

19.9.1 Uncertainty is "a parameter associated with the result of a measurement, that characterizes the dispersion of the values that could reasonably be attributed to the measurand" (as defined by the International Vocabulary of Basic and General Terms in Metrology, ISO Geneva, 1993, ISBN 92-67-10175-1). Knowledge of the uncertainty of a measurement provides additional confidence in a result's validity. Its value accounts for all the factors which could possibly affect the result, such as adequacy of analyte definition, sampling, matrix effects and interferences, climatic conditions, variances in weights, volumes, count times and standards, analytical procedure, and random variation. Some national accreditation organizations require the use of an "expanded uncertainty": the range within which the value of the measurand is believed to lie within at least a 95% confidence level with the coverage factor k=2.

19.9.2 Uncertainty is not error. Error is a single value, the difference between the true result and the measured result. On samples, the true result is never known. The measurement is the sum of the unknown true value and the unknown error. Unknown error is a combination of systematic error, or bias, and random error. Bias varies predictably, constantly, and independently from the number of measurements. Random error is unpredictable, assumed to be Gaussian in distribution, and reducible by increasing the number of measurements.

19.10 CONTROL OF DATA

The laboratory has policies and procedures in place to ensure the authenticity, integrity, and accuracy of the analytical data generated by the laboratory.

19.10.1 Computer and Electronic Data Related Requirements

The three objectives of our computer security procedures and policies are defined below. More detail is outlined in SOP RL-IT-001. The laboratory is currently running RadCalc which is an in-house developed LIMS that has been customized to meet the needs of the laboratory. All users shall be trained annually in computer security awareness. Should corrections to electronic data be necessary, the changes shall be documented as part of the electronic batch log.

19.10.1.1 Maintain the Database Integrity:
Assurance that data is reliable and accurate through data verification (review) procedures, password-protecting access, anti-virus protection, data change requirements, as well as an internal LIMS permissions procedure.

- LIMS Database Integrity is achieved through data input validation, internal user controls, and data change requirements.
- Spreadsheets and other software developed in-house must be verified with documentation through hand calculations prior to use.

19.10.1.2 Ensure Information Availability: Protection against loss of information or service is ensured through scheduled back-ups, stable file server network architecture, secure storage of media, line filter, Uninterruptible Power Supply (UPS), and maintaining older versions of software as revisions are implemented.

19.10.1.3 Maintain Confidentiality: Ensure data confidentiality through physical access controls, and encryption when electronically transmitting data.

19.10.2 Data Reduction

The complexity of the data reduction depends on the analytical method and the number of discrete operations involved (e.g., extractions, dilutions, instrument readings, radioactive progeny ingrowth, and concentrations). The analyst calculates the final results from the raw data or uses appropriate computer programs to assist in the calculation of final reportable values. Measurement data from nuclear detection instruments are electronically handled. Where available in instrument software, all electronic tracking and audit functions must be enabled.

For manual data entry, the data is reduced by the analyst and then verified by a technical data reviewer or alternate analyst prior to updating the data in LIMS. The spreadsheets, or any other type of applicable documents, are signed by both the analyst and alternate reviewer to confirm the accuracy of the manual entry(s).

Manual integration of peaks will be documented and reviewed and the raw data will be flagged in accordance with the TestAmerica Corporate SOP CA-Q-S-002, *Acceptable Manual Integration Practices* or RL-DR-003. For DoD clients, the spectra obtained before and after the manual integration must be retained to permit reconstruction of the results, and the analyst must sign and date each set of data with a note regarding rationale.

Analytical results are reduced to appropriate concentration units specified by the analytical method, taking into account factors such as dilution, sample weight or volume, etc. Blank correction will be applied only when required by the method or per client requirements; otherwise, it should not be performed. Calculations are independently verified by appropriate laboratory staff. Calculations and data reduction steps for various methods are summarized in the respective analytical SOPs or program requirements.

19.10.2.1 All raw data must be retained in the worklist folder, computer file (if appropriate), and/or runlog. All criteria pertinent to the method must be recorded. The documentation is recorded at the time observations or calculations are made and must be signed or initialed/dated (month/day/year). It must be easily identifiable who performed which tasks if multiple people were involved.

19.10.2.2 In reporting, the analyst or the instrument output records the raw data result using values of known certainty plus one uncertain digit. If final calculations are performed external to LIMS, the results should be entered in LIMS with at least three significant figures.

19.10.2.3 For those methods that do not have an instrument printout or an instrumental output compatible with the LIMS System, the raw results and dilution factors are entered directly into LIMS by the analyst, and the software calculates the final result for the analytical report. LIMS has a defined significant figure criterion for each analyte.

The laboratory strives to import data directly from instruments or calculation spreadsheets to ensure that the reported data are free from transcription and calculation errors. For those analyses with an instrumental output compatible with the LIMS, the raw results and dilution factors are transferred into LIMS electronically. The analyst prints a copy of what has been entered to check for errors. This printout and the instrument's printout of calibrations, concentrations/activities, if applicable, are retained with the data file.

19.10.3 Logbook / Worksheet Use Guidelines

Logbooks and/or worksheets are filled out 'real time' and have enough information on them to trace the events of the applicable analysis/task. (e.g. calibrations, standards, analyst, sample ID, date, time on short holding time tests, temperatures when applicable, calculations are traceable, etc.)

- Logbooks shall have permanent bound sequentially numbered pages.

- The persons responsible for the activity will sign or initial and date the entry. Whenever possible, the entries shall be in chronological order.
- Corrections are made following the procedures outlined in Section 12.
- Logbooks are controlled by the QA department. A record is maintained of all logbooks in the lab.
- Unused portions of pages must be "Z"d out, signed and dated.
- Worksheets are created with the approval of the Technical Manager at the facility. The QA Manager controls all worksheets following the procedures in Section 6.

19.10.4 Data Review / Verification Procedures

Data review procedures are outlined in several SOPs to ensure that reported data are free from calculation and transcription errors, and that QC parameters have been reviewed and evaluated before data is reported. The general review concepts are discussed below. More specific information can be found in the SOPs, primarily SOP RL-DR-001.

19.10.4.1 The data review process starts when samples arrive at the laboratory. Sample Receiving personnel review COC forms, then input the sample information and required analyses into the LIMS. The Project Managers perform final review of the COC forms and Sample Receiving input before releasing the samples into the laboratory work flow.

19.10.4.2 As analytical results are generated, the first level of data review is performed. Analysts review their work to ensure that the results generated meet QC and relevant method requirements. The analyst then transfers the data into the LIMS (in many case, the transfer is automatic).

19.10.4.3 A second analyst or data reviewer performs a second level / peer data review. Reported results are checked against raw data, and the results are reviewed for accuracy. Items evaluated during the second level review include blanks, LCS, sample data, qualifiers and spike information. Issues that deem further review include the following:

- QC data are outside the specified control limits for accuracy and precision
- Reviewed sample data does not match with reported results
- Unusual detection limit changes are observed
- Samples having unusually high results
- Samples exceeding a known regulatory limit
- Raw data indicating some type of contamination or poor technique
- Transcription errors

19.10.4.4 Unacceptable analytical results may require reanalysis of the samples. Corrective action is initiated whenever necessary, and recorded in the NCM system.

19.10.4.5 The results are then entered or directly transferred into the LIMS.

19.10.4.6 The Project Manager performs a final administrative review of the reported results for appropriateness and completeness. This review and approval ensures that client requirements have been met and that the final report has been properly completed. The process includes, but is not limited to, verifying that chemical relationships are evaluated, COC is followed, cover letters/

narratives are present, flags are appropriate, and project specific requirements are met. The following are some examples of radiochemical relationships that are reviewed (if data is available):

- Comparing gross alpha results to alpha emitters
- Comparing gross beta results to beta emitters

19.10.4.7 When compliance with DoD ELAP is required for a client project, the specific requirements of Grey Box 44 in the DoD QSM must be met. This includes 100% review of results by the analyst, a 100% verification review by a technically qualified supervisor or independent analyst, and a final administrative review. In addition, the QA Manager must include review of a minimum of ten percent of these projects in the periodic QA review schedule.

19.10.5 Manual Integrations

Computerized data systems provide the analyst with the ability to re-integrate raw instrument data in order to optimize the interpretation of the data. Though manual integration of data is an invaluable tool for resolving variations in instrument performance and some sample matrix problems, when used improperly, this technique would make unacceptable data appear to meet QC acceptance limits. Improper re-integrations lead to legally indefensible data, a poor reputation, or possible laboratory decertification. Because guidelines for re-integration of data are not provided in the methods and most methods were written prior to widespread implementation of computerized data systems, the laboratory trains all analytical staff on proper manual integration techniques using SOP CA-Q-S-002 and RL-DR-003 as the guidelines.

19.10.5.1 The analyst must use professional judgment and common sense to determine when manual integrating is required. Analysts are encouraged to ask for assistance from a senior analyst or manager when in doubt.

19.10.5.2 Analysts shall not increase or decrease peak areas to for the sole purpose of achieving acceptable QC recoveries that would have otherwise been unacceptable. The intentional recording or reporting of incorrect information (or the intentional omission of correct information) is against company principals and policy and is grounds for immediate termination.

19.10.5.3 Client samples, performance evaluation samples, and QC samples are all treated equally.

19.10.5.4 All manual integrations receive a second level review.

19.10.5.5 For DoD clients, the raw data obtained before and after the integration must be retained to permit reconstruction of the results, and the analyst must sign and date each set of data with a note regarding rationale.

Figure 19-1.
Example - Demonstration of Capability Documentation

DEMONSTRATION OF CAPABILITY

Laboratory Name: _____

Laboratory Address: _____

Method: _____ Matrix: _____

Date: _____ Analyst(s):_____

Source of Analyte(s):_____

Analytical Results

Analyte	Conc. (units)	Rep 1	Rep 2	Rep 3	Rep 4	Average % Recovery	%RSD

% RSD = Percent relative standard deviation = standard deviation divided by average % Recovery

Raw data reference: _____

Certification Statement:

We, the undersigned, certify that:

1. The cited test method has met Demonstration of Capability requirements.
2. The test method was performed by the analyst(s) identified on this certification.
3. A copy of the test method and the laboratory-specific SOPs are available for all personnel on site.
4. The data associated with the method demonstration of capability are true, accurate, complete, and self-explanatory.
5. All raw data necessary to reconstruct and validate these analyses have been retained at the facility, and the associated information is well organized and available for review.

_____ _____
Analyst Signature Date

_____ _____
Technical Manager Signature Date

_____ _____
Quality Assurance Coordinator Signature Date

SECTION 20
EQUIPMENT (AND CALIBRATIONS)
(NELAC 5.5.5)

20.1 OVERVIEW

The laboratory purchases the most technically advanced analytical instrumentation for sample analyses. Instrumentation is purchased on the basis of accuracy, dependability, efficiency and sensitivity. Each laboratory is furnished with all items of sampling, preparation, analytical testing and measurement equipment necessary to correctly perform the tests for which the laboratory has capabilities. Each piece of equipment is capable of achieving the required accuracy and complies with specifications relevant to the method being performed. Before being placed into use, the equipment (including sampling equipment) is calibrated and checked to establish that it meets its intended specification. The calibration routines for analytical instruments establish the range of quantitation. Calibration procedures are specified in laboratory SOPs. A list of laboratory equipment and instrumentation is presented in Table 20-1. Each instrument is uniquely identified as practicable.

20.2 CONTROL OF TEST EQUIPMENT AND INSTRUMENTATION

Test equipment and analytical instrumentation are only operated by authorized and trained personnel. Manufacturer's instructions for equipment use are readily accessible to all appropriate laboratory personnel.

Instructions for allowable equipment or operating software adjustments during operation are included in SOPs, in order to minimize any setting changes that would invalidate test results.

20.3 PREVENTIVE MAINTENANCE

20.3.1 The laboratory follows a well-defined program to ensure proper equipment operation and to prevent the failure of laboratory equipment or instrumentation during use. This program of preventive maintenance helps to avoid delays due to instrument failure.

Routine preventive maintenance, such as lubrication, cleaning, and replacements, should be performed according to the procedures outlined in the manufacturer's manual.

20.3.2 Table 20-2 lists examples of scheduled routine maintenance. It is the responsibility of each department supervisor to ensure that instrument maintenance logs are kept for all equipment in his/her department. Preventative maintenance procedures may also be outlined in analytical SOPs or instrument manuals. (Note: for some equipment, the log used to monitor performance is also the maintenance log. Multiple pieces of equipment may share the same log as long as it is clear as to which instrument is associated with an entry.)

20.3.3 Instrument maintenance logs are controlled and are used to document instrument problems, instrument repair and maintenance activities. Maintenance logs shall be kept for all major pieces of equipment. Instrument maintenance logs may also be used to specify instrument parameters.

20.3.3.1 Documentation must include all major maintenance activities such as contracted preventive maintenance and service and in-house activities such as the replacement of electrical components, tubing, valves, detectors, cleaning and adjustments.

20.3.3.2 Each entry in the instrument log includes the analyst's initials, the date, a detailed description of the problem (or maintenance needed/scheduled), a detailed explanation of the solution or maintenance

performed, and a verification that the equipment is functioning properly (state what was used to determine a return to control. e.g. instrument recalibrated on 'date' with acceptable verification, etc.).

20.3.3.3 When maintenance or repair is performed by an outside agency, service receipts detailing the service performed will be maintained and entries will be made into the appropriate logs.

20.3.4 If an instrument requires repair (subjected to overloading or mishandling, gives suspect results, or otherwise has shown to be defective or outside of specified limits) it shall be taken out of operation and tagged as out of service or otherwise isolated until such a time as the repairs have been made and the instrument can be demonstrated as operational by calibration and/or verification or other test to demonstrate acceptable performance. The laboratory shall examine the effect of this defect on previous data.

20.3.5 In the event of equipment malfunction that cannot be resolved, service shall be obtained from the instrument vendor manufacturer, or qualified service technician, if such a service can be tendered. If on-site service is unavailable, arrangements shall be made to have the instrument shipped back to the manufacturer for repair. Back up instruments, which have been approved, for the analysis shall perform the analysis normally carried out by the malfunctioning instrument. If the back up is not available and the analysis cannot be carried out within the needed timeframe, the samples shall be subcontracted using the procedures outlined in Section 8, when applicable.

If an instrument is sent out for service or transferred to another facility, it must be recalibrated and verified prior to return to lab operations.

20.4 SUPPORT EQUIPMENT

This section applies to all devices that may not be the actual test instrument, but are necessary to support laboratory operations providing critical/precise measurement information. These include but are not limited to: balances, ovens, refrigerators, freezers, incubators, temperature measuring devices and volumetric dispensing devices if quantitative results are dependent on their accuracy, as in standard preparation and dispensing or dilution into a specified volume. All support equipment shall be uniquely identified and raw data records associated with the support equipment are retained to document equipment performance. Whenever practicable, any support equipment requiring calibration shall be labeled, coded or otherwise identified to indicate the status of calibration, including the date when last calibrated and date or expiration criteria when recalibration is due. Support equipment to be used for DoD projects shall conform to the minimum criteria found in the DoD QSM, Gray Box 31, in the absence of method-specific criteria.

20.4.1 Weights and Balances

The accuracy of the balances used in the laboratory is checked every working day, before use. All balances are placed on stable counter tops.

Each balance is checked at three weights prior to use with at least two certified ASTM type 1 weights (called working weights) spanning its range of use (weights that have been calibrated to ASTM type 1 weights may also be used for daily verification). These weights shall bracket the range of expected use for the day.

ASTM type 1 weights used only for calibration of other weights, and no other purpose (called master weights) are inspected for corrosion, damage or nicks at least annually and if no damage is observed, they are calibrated at least every three (3) years by an ISO 17025-accredited calibration laboratory, and the provided certificate is kept on file. Any weights (including ASTM Type 1) used for daily balance checks or other

purposes are verified annually to NIST standards (this may be done internally if laboratory maintains "calibration only" ASTM type 1 weights).

An external ISO 17025-accredited service engineer services laboratory balances on an annual basis. This service is documented on each balance with a signed and dated certification sticker that identifies traceability of the calibration to the NIST standards. Balance calibrations are checked each day of use.

All of this information is recorded in logs, and the recalibration/recertification certificates are kept on file.

20.4.2 Thermometers

All thermometers are calibrated on an annual basis with a NIST-traceable thermometer.

The NIST thermometer is recalibrated every three years (unless thermometer has been exposed to temperature extremes or apparent separation of internal liquid) by an approved outside service and the provided certificate of traceability is kept on file. The NIST thermometer has increments of 0.2 ºC, and has a range applicable to all method and certification requirements. The NIST traceable thermometer is used for no other purpose than to calibrate other thermometers.

All of this information is documented in logbooks. Monitoring method-specific temperature requirements, including incubators, heating blocks, water baths, and ovens, is documented in method-specific logbooks.

20.4.3 Refrigerators/Freezer Units, Waterbaths, Ovens and Incubators

The temperatures of all refrigerator units and freezers used for sample storage are monitored daily, when in use. Sample storage refrigerator temperatures are kept between 0ºC and ≤ 6 ºC when in use. Should a refrigerator temperature be out of limits, actions shall be taken as described in SOP RL-SRV-002.
NOTE: Very few samples handled by the Richland Laboratory require temperature control, therefore refrigerators are rarely in use.

Incubators are monitored on days of use.

All of this equipment has a unique identification number, and is assigned a unique thermometer for monitoring.

Specific temperature settings/ranges for other refrigerators, ovens, waterbaths, and incubators can be found in method specific SOPs.

This information is documented in Daily Temperature Logbooks and method-specific logbooks.

20.4.4 Autopipettors

Mechanical volumetric dispensing devices are given unique identification numbers, and the delivery volumes are verified gravimetrically, at a minimum, on a quarterly basis.
"Critical" pipets, as described in SOP RL-SE-001, are verified daily before each use.

20.4.5 Microwave Bomb Digestors

Documentation shall be maintained for the calibration activities required for microwave bomb digestion as prescribed in the analytical method.

20.5 INSTRUMENT CALIBRATIONS

Calibration of analytical instrumentation is essential to the production of quality data. Strict calibration procedures are followed for each method. These procedures are designed to determine and document the method detection limits, the working range of the analytical instrumentation and any fluctuations that may occur from day to day.

Sufficient raw data records are retained to allow an outside party to reconstruct all facets of the initial calibration. Records contain, but are not limited to, the following: calibration date, method, instrument, analyst(s) initials or signatures, analysis date, analytes, concentration/activity,

Sample results must be quantitated from the initial calibration and may not be quantitated from any continuing calibration verification unless otherwise required by regulation, method or program.

Instrument calibration verification must be performed:

1) at the beginning and end of each analytical batch (except, if an internal standard is used, only one verification needs to be performed at the beginning of the analytical batch);
2) whenever it is expected that the analytical system may be out of calibration or might not meet the verification acceptance criteria;
3) if the time period for calibration or the most previous calibration verification has expired; or
4) for analytical systems that contain a calibration verification requirement.

If the initial calibration or continuing calibration verification (CCV) results are outside of the acceptance criteria, corrective action is performed and any affected samples are reanalyzed if possible. If the reanalysis is not possible, any data associated with an unacceptable initial calibration will be reported with appropriate data qualifiers. If routine corrective action fails to produce a second consecutive calibration verification within acceptance criteria, a new initial instrument calibration must be performed.

20.5.1 CHEMICAL CALIBRATION STANDARDS

Calibration standards are prepared using the procedures indicated in the Reagents and Standards section of the determinative method SOP. See Appendix 5 for a listing of laboratory SOPs.

Standards for instrument calibration are obtained from a variety of sources. All standards are traceable to national or international standards of measurement, or to national or international standard reference materials.

The lowest concentration calibration standard that is analyzed during an initial calibration must be at or below the stated RL for the method based on the final volume of extract (or sample).

The working range is defined by the range of the calibration standards, with the exception of the Inductively Coupled Plasma - Mass Spectrometer (ICP-MS) where a daily low level check standard and a daily linear range verification standards may be used to define the working range. See SOP RL-MT-004.

All initial calibrations are verified with a standard obtained from a second source and traceable to a national standard, when available (or vendor certified different lot if a second source is not available). This verification occurs immediately after the calibration curve has been analyzed, and before the analysis of any samples. For DoD projects, the second source concentration must be at or near the midpoint of the calibration range.

20.5.2 Chemical Calibration Verification

The calibration relationship established during the initial instrument calibration must be verified initially and at least daily as specified in the laboratory method SOPs in accordance with the referenced analytical methods and NELAC (2003) standard, Section 5.5.5.10. The process of calibration verification applies to both external standard and internal standard calibration techniques, as well as to linear and non-linear calibration models. Initial calibration is with a standard source secondary (second source standard) to the calibration standards, but the same source standards as the calibration curve may be used for CCVs.

All target analytes and surrogates, including those reported as non-detects, must be included in periodic calibration verifications for purposes of retention time confirmation and to demonstrate that calibration verification criteria are being met, i.e., RPD, per NELAC (2003) Standard, Section 5.5.5.10.

All samples must be bracketed by periodic analyses of standards that meet the QC acceptance criteria (e.g., calibration and retention time). The frequency is found in the determinative methods or SOPs.

A CCV must be repeated at the beginning and, for methods that have quantitation by external calibration models, at the end of each analytical batch. Some methods have more frequent CCV requirements see specific SOPs. Most Inorganic methods require the CCV to be analyzed after ever 10 samples or injections, including matrix or batch QC samples.

20.5.3 RADIOCHEMICAL INSTRUMENT CALIBRATIONS

Radiochemical instrument calibrations shall be performed as prescribed in ASTM method D7282. Frequency of calibrations shall also follow this method.

20.5.4 CALIBRATION STANDARDS

- Shelf life for stock radioactive standards shall not exceed 5 half lives. Shelf life for stock solutions prepared in the laboratory from salts, metals or dilution from a mother solution shall be no greater than one year, unless stated otherwise on the calibration certificate from the manufacturer. Standards in the form of a soil, sealed sources, filter, plated sources and sealed Marinelli beakers do not always have an expiration date. After the 1 year shelf life of the stock solution has expired, it must be re-certified.
- If the standard is not re-verified, the standard shall be removed or clearly designated as acceptable for qualitative purposes only.
- The expiration date of the secondary standard shall not exceed the expiration date of the primary standard.

The accuracy of calibration standards is checked by comparison with a calibration verification standard from a second vendor. In cases where a second vendor standard source is not available, a source from a different dilution is acceptable. All cases where this requirement cannot be met shall be documented with a nonconformance memo.

When a traceable standard is not available to use for calibration or verification activities, a non-traceable standard may be used if written client approval is obtained (when required).

Calibration standards are prepared using the appropriate procedures. However, the general procedures are described below.

20.5.4.1 For each analyte of interest, prepare calibration standards at the minimum number of concentrations as stated in the analytical methods.

20.5.4.2 Standards for instrument calibration are obtained from a variety of sources. All radioactive standards are traceable to NIST whenever possible. Dilution standards are prepared from stock standards purchased from commercial suppliers. A standard log is maintained, containing concentration/activity, date of receipt, date of standard preparation, any dilutions made, lot number, supplier, type of solvent and a unique code number to identify the standard.

20.5.5 RADIOCHEMICAL CONTINUING INSTRUMENT CALIBRATION VERIFICATION

20.5.5.1 Check sources shall be used only to verify that efficiencies have not changed. They shall not be used to determine efficiencies.

20.5.5.2 Performance checks shall be performed using appropriate check sources and monitored with control charts or tolerance charts to ensure that the instrument is operating properly and that the detector response has not significantly changed and therefore the instrument calibration has not changed. The same check source used in the preparation of the tolerance chart or control chart at the time of calibration shall be used in the calibration verification.

20.5.5.2.1 GAMMA - For gamma spectroscopy systems, the performance checks for efficiency and energy calibration shall be performed on a day of use basis along with performance checks on peak resolution.

20.5.5.2.2 For systems using sample changers and/or long count times that run more than a day, the energy calibration shall be checked before each analytical batch.

20.5.5.2.3 The Full-Width-Half-Maximum (FWHM) resolution of the detector shall be evaluated daily or prior to instrument use. The measured FWHM resolution shall be trended. Corrective actions shall be taken when an intolerable condition becomes evident or when gross changes are identified in the resolution of the detector at the energies that bound the applicable energy range.

20.5.5.2.4 ALPHA SPECTROSCOPY – For alpha spectroscopy systems, the performance check for energy calibration and counting efficiency shall be performed on a monthly basis.

20.5.5.2.5 Detector response (counting efficiency) determinations shall be performed when the check source count is outside the acceptable limits of the control chart.

20.5.5.2.6 Calibration or QC sources that will not cause detector contamination from recoil atoms shall be used whenever possible.

20.5.5.2.7 GAS-PROPORTIONAL AND LIQUID SCINTILLATION COUNTERS – The background check for counting efficiency shall be performed on a day-of-use basis. For batches of sample that uninterruptedly count for more than a day, a performance check can be performed at the beginning and end of the batch as long as this time interval is no greater than one week.

20.5.5.2.7.1 For scintillation counters, the calibration verification for counting efficiency shall be performed on a day of use basis. Radon scintillation detector efficiencies shall be verified at least on a monthly basis when the system is in use.

20.5.6 RADIOCHEMICAL BACKGROUND MEASUREMENT

20.5.6.1 Background measurements shall be made on a day-of-use basis (except for alpha and gamma spectroscopy) and monitored using control charts or tolerance charts to ensure that the laboratory maintains its capability to meet required data quality objectives. The duration of the background check shall be of sufficient duration (i.e., at least as long as the sample count time). When applicable, these values are subtracted from the total measured activity in the determination of the sample activity.

20.5.6.2 Successive long background measurements may be evaluated as background check measurements. The background check frequency may be extended to accommodate long sample count times.

20.5.6.3 A background shall also be collected before and after any counting chamber changes are made, i.e. cleaning, liner replacement, or instrument modification.

20.5.6.4 GAMMA SPECTROSCOPY – The long background measurements, used for background corrections, shall be performed on at least a monthly basis.

20.5.6.5 ALPHA SPECTROSCOPY – Background measurements shall be performed on at least a monthly basis. The monthly background shall be performed for each Region of Interest (ROI). A detector background shall be rechecked after counting a high-activity sample.

20.5.6.6 GAS PROPORTIONAL – Background measurements shall be performed on at least a weekly basis. Long background measurements (to be used for background corrections) shall be performed on a quarterly basis, at a minimum. A detector background shall be rechecked after counting a high-activity sample.

20.5.6.7 SCINTILLATION COUNTERS – Background measurements shall be performed each day of use. The daily instrument check shall include a check with an unquenched, sealed background vial, which is never used to correct sample results for background.

20.5.7 RADIOCHEMICAL INSTRUMENT CONTAMINATION MONITORING

20.5.7.1 SOP RL-RS-001 specifies the requirements for monitoring radiochemical instrumentation. The SOP specifies the monitoring frequencies and criteria for initiating corrective action.

Table 20-1. Example - Laboratory Instrumentation

Manufacturer	Model	Number of Detectors	Purchase Date	Auto-sampler	Method Performed
Randam	Randam SC-5	81	1990	No	Alpha Scintillation
Ludlum	Ludlum200, USGS	55	1990	No	Alpha Scintillation
Canberra	Canberra 7401	44	1990	No	Alpha Spectroscopy
Ortec	Ortec 576A	149	1990	No	Alpha Spectroscopy
Ortec	Ortec 576	43	1990	No	Alpha Spectroscopy
Tennelec	Tennelec TC256	28	1990	No	Alpha Spectroscopy
Canberra	CanberraGC2518 5	1	1990	No	Gamma Spectroscopy
Canberra	Canberra GL20208	1	1990	No	Gamma Spectroscopy
Ortec	Ortec LoAx51370	1	1990	No	Gamma Spectroscopy
Ortec	LO-AX-51370/20	2	2003	No	Gamma Spectroscopy
Ortec	Ortec GEM-25185	1	1990	No	Gamma Spectroscopy
Ortec	GEM-40	4	2003	No	Gamma Spectroscopy
Ortec	Ortec GEM-25195	3	1990	No	Gamma Spectroscopy
Ortec	Ortec GMX-40195	1	1990	No	Gamma Spectroscopy
PGT	PGT NIGC-2519	2	1990	No	Gamma Spectroscopy
PGT	PGT NIGC-2519	3	1990	No	Gamma Spectroscopy
PGT	PGT IGP-2007	1	1990	No	Gamma Spectroscopy
Spectrum Sciences	QA-230	2	1990	No	Gas Proportional Counter
Tennelec	Tennelec LB5100	1	1990	No	Gas Proportional Counter
Tennelec	Tennelec LB4000	3	1990	No	Gas Proportional Counter
UST	UST Quad	8	1990	No	Gas Proportional Counter
Packard	Packard 4530	1	1990	No	Liquid Scintillation
Packard	Packard 2000	1	1990	No	Liquid Scintillation
Packard	Packard 2200CA	2	1990	No	Liquid Scintillation
Packard	Packard 2550TRL	1	1990	No	Liquid Scintillation
Packard	Packard 2500TR	1	1990	No	Liquid Scintillation
Packard	3100 TR	1	2004	No	Liquid Scintillation
Quantalus	Quantalus	1	1990	No	Liquid Scintillation
UST	KPA 2	1	1990	No	Kinetic Phosphorimeter Analyzer
CHEMCHEK	KPA 3	1	1990	No	Kinetic Phosphorimeter Analyzer
Thermo Jarrell Ash 61E ICAP	12621100	1	1995	No	6010B
Perkin Elmer Elan DRC II	AI12010609	1	2007	Yes	ICP-MS

Table 20-2. Example: Schedule of Routine Maintenance

Instrument	Items Checked/Service	Minimum Frequency
Alpha Proportional	Check gas flow/bubbler oil level Clean sample tray	Each day of use Weekly
Beta Proportional	Check gas flow Clean sample holders	Each day of use Weekly
Liquid Scintillation	Clean sample changer Check condensate trays Check air filters	Monthly Monthly Monthly
GPC αβ Proportional	Check gas flow Clean sample holders	Each day of use Weekly
Gamma Spectroscopy	Check LN_2 level Check plastic liner, replace if needed	Bi-weekly Weekly
Alpha Spectroscopy	Clean sample holder Change vacuum pump oil	As needed Every six months
KPA	Clean mirror surfaces Change dye cell contents Clean reference cell Change reference cell contents Replace Plasma cartridge	As needed At least quarterly Every two months As needed Every 2E+07 pulses or as needed
Alpha Scintillation	Vacuum detector chambers	Monthly
ICP – ICP-MS	Check torch tip Clean torch tip Check pump and capillary tubing Check coolant level Clean intelligence controller filters Clean cooling inlet filters Clean and oil guiding rods Oil RFPT coolant fan	Each day of use As needed Weekly Weekly Monthly Monthly Monthly Semi-annually

SECTION 21
MEASUREMENT TRACEABILITY
(NELAC 5.5.6)

21.1 OVERVIEW

Traceability of measurements shall be assured using a system of documentation, calibration, and analysis of reference standards. Laboratory equipment that are peripheral to analysis and whose calibration is not necessarily documented in a test method analysis or by analysis of a reference standard shall be subject to ongoing certifications of accuracy. At a minimum, these must include procedures for checking specifications of ancillary equipment: balances, thermometers, temperature, Deionized (DI) and Reverse Osmosis (RO) water systems, automatic pipettes and other volumetric measuring devices. With the exception of Class A Glassware (including glass microliter syringes that have a certificate of accuracy), quarterly accuracy checks are performed for all mechanical volumetric devices. Wherever possible, subsidiary or peripheral equipment is checked against standard equipment or standards that are traceable to national or international standards. Class A glassware should be routinely inspected for chips, etching or deformity. If the glassware is suspect, accuracy will be assessed prior to use.

21.2 NIST-TRACEABLE WEIGHTS AND THERMOMETERS

Reference standards of measurement shall be used for calibration only and for no other purpose, unless it can be shown that their performance as reference standards would not be invalidated.

For NIST-traceable weights and thermometers, the laboratory requires that all calibrations be conducted by a calibration laboratory accredited by the American Association for Laboratory Accreditation (A2LA), the National Voluntary Laboratory Accreditation Program (NVLAP), the Asia-Pacific Laboratory Accreditation Cooperation (APLAC), or the European Cooperation for Accreditation (EA). A certificate and scope of accreditation is kept on file at the laboratory.

21.3 REFERENCE STANDARDS / MATERIALS

Reference standards/materials, where commercially available, are traceable to certified reference materials with an accompanying Certificate of Analysis. If a standard cannot be purchased from a vendor that supplies a Certificate of Analysis, the purity of the standard is documented by analysis. All radioactive standards are traceable to NIST whenever possible. Other international traceable radioactive standards may be used when NIST traceable standards are not available. When a traceable standard is not available, written approval for use of a non-traceable standard must be obtained from the DOE clients.

The receipt of all reference standards must be documented. Reference standards are labeled with a unique Standard Identification Number and expiration date. All documentation received with the reference standard is retained as a QC record and references the Standard Identification Number.

All reference, primary and working standards/materials, whether commercially purchased or laboratory prepared, must be checked to ensure that the variability of the standard or material from the 'true' value does not exceed method requirements. The accuracy of calibration standards is checked by comparison with a standard from a second source. In cases where a second standard manufacturer is not available, a vendor certified different lot is acceptable for use as a second source. The appropriate QC criteria for specific standards are defined in laboratory SOPs.

All radioactive standards shall be verified prior to initial use and annually. At least three verification measurements of a standard shall be used to determine the mean value and standard deviation of the verification results. The mean value shall be within 5% of the decay corrected certified value. The two sigma value used for the 95% confidence interval of the mean shall not exceed 10% of the mean value of the three verification measurements. If all criteria are met, the certified value shall be used.

Corrections for radioactive decay and/or ingrowth of progeny shall be performed for radionuclide standards.

All standards and materials must be stored and handled according to method or manufacturer's requirements in order to prevent contamination or deterioration. For safety requirements, please refer to method SOPs and the laboratory Environmental Health and Safety Manual.

21.4 DOCUMENTATION AND LABELING OF STANDARDS, REAGENTS, AND REFERENCE MATERIALS

Reagents must be at a minimum the purity required in the test method. The date of reagent receipt and the expiration date are documented. The lots for most of the common acids and solvents are tested for acceptability prior to company wide purchase. (Refer to TestAmerica's Corporate SOP CA-Q-S-001, *Solvent and Acid Lot testing and Approval*).

Required information for reagents and standards is recorded upon receipt (see Section 9.3.1 for details). All manufacturer or vendor supplied Certificates of Analysis or Purity must be retained, stored appropriately, and readily available for use and inspection. These records are maintained in the QA files when applicable. Records must be kept of the date of receipt and date of expiration of standards, reagents and reference materials. In addition, records of preparation of laboratory standards, reagents, and reference materials must be retained, stored appropriately, and be readily available for use and inspection. For detailed information on documentation and labeling, please refer to method specific SOPs.

21.4.1 All standards, reagents, and reference materials must be labeled in an unambiguous manner. Standards are logged into the laboratory's LIMS system *according to the RadCalc user guide* and are assigned a unique identification number. Reagents are labeled according to SOP RL-RPL-001. The following information is typically recorded in the electronic database:

- Standard ID
- Description of Standard
- Preparer's name
- Final volume and number of vials prepared
- Preparation Date
- Expiration Date
- Standard source type (stock or daughter)
- Parent standard ID (if applicable)
- Parent Standard Analyte Concentration (if applicable)
- Parent Standard Amount used (if applicable)
- Final concentration of each analyte
- Comment box (text field)

Records are maintained electronically for standard and reference material preparation. These records show the traceability to purchased stocks or neat compounds. Preparation procedures are provided in the Method SOPs.

21.4.2 All standards, reagents, and reference materials must be clearly labeled per SOP RL-RPL-001. Standard ID numbers must be traceable through electronic database.

All reagents and standards must be stored in accordance to the following priority: 1) with the manufacturer's recommendations; 2) with requirements in the specific analytical methods.

SECTION 22.0
SAMPLING
(NELAC 5.5.7)

22.1 OVERVIEW

The laboratory does not provide sampling services. The laboratory's responsibility in the sample collection process lies in supplying the sampler with the necessary coolers, sample containers, preservatives, sample labels, custody seals, COC forms required to properly preserve and ship samples to the laboratory.

22.2 SAMPLING CONTAINERS

The laboratory offers clean sampling containers for use by clients. These containers are obtained from reputable container manufacturers and meet EPA specifications as required.

22.2.1 Preservatives

Upon request, preservatives are provided to the client in pre-cleaned sampling containers. In some cases containers may be purchased pre-preserved from the container supplier. Whether prepared by the laboratory or bought pre-preserved, the grades of the preservatives are at a minimum:

- Hydrochloric Acid – Reagent grade or equivalent
- Nitric Acid – Reagent grade or equivalent
- Sodium Hydroxide – Reagent grade or equivalent

22.3 SAMPLING CONTAINERS, PRESERVATION REQUIREMENTS, HOLDING TIMES

The preservation and holding time criteria specified in SOP RL-SRV-001 are derived from the source documents for the methods. If method required holding times or preservation requirements are not met, the reports will be qualified using a flag, footnote or case narrative. As soon as possible or "ASAP" is an EPA designation for tests for which rapid analysis is advised, but for which neither EPA nor the laboratory have a basis for a holding time.

22.4 SAMPLE ALIQUOTS / SUBSAMPLING

Taking a representative sub-sample from a container is necessary to ensure that the analytical results are representative of the sample collected in the field. The size of the sample container, the quantity of sample fitted within the container, and the homogeneity of the sample need consideration when sub-sampling for sample preparation. It is the laboratory's responsibility to take a representative subsample or aliquot of the sample provided for analysis.

Analysts should handle each sample as if it is potentially dangerous. At a minimum, safety glasses, gloves, and lab coats must be worn and safety procedures followed when preparing aliquots for analysis.

22.4.1 For water samples, before taking each aliquot for analysis, invert the sample container end-over-end at least three times and immediately pour off the aliquot. Especially when suspended solids are present, adequate mixing of the sample is extremely important.

22.4.2 For solid samples, if the solid can be mixed, stir before removing the aliquot. Mix more than is needed for the analysis to be performed (e.g. if 30 g are needed, mix 50-100 g, if 1 g is needed, mix 20 g, etc.).

- For soil samples, avoid debris in the subsample aliquot as much as possible (e.g. gravel, sticks, roots and grass); note this information in the sample preparation record.

If the solid is extremely heterogeneous, and the client has given no instructions, utilize the following technique: take portions of masses from each group, proportional to their contribution to the original sample to make a composite. Record in detail how the composite was created. For very unusual samples, consult with the QA department or Supervisor

22.4.3 For multiphasic samples, the client should instruct the laboratory as to the intent of the testing and how to handle the sample. If the entire sample is to be accounted for, and the phases do not mix easily with inversion/stirring, such that a representative aliquot can be taken, the analyst should record the percent by volume of each phase. The analysis must be conducted on each phase separately.

***Please note**: the holding times are program specific and different programs may have different holding times for equivalent methods.*

SECTION 23
HANDLING OF SAMPLES
(NELAC 5.5.8)

Sample management procedures at the laboratory ensure that sample integrity and custody are maintained and documented from sampling/receipt through disposal.

23.1 CHAIN OF CUSTODY

The COC form is the written documented history of any sample and is initiated when bottles are sent to the field or at the time of sampling. This form is completed by the sampling personnel and accompanies the samples to the laboratory where it is received and stored under the laboratory's custody. The purpose of the COC form is to provide a legal written record of the handling of samples from the time of collection until they are received at the laboratory. It also serves as the primary written request for analyses from the client to the laboratory. The COC form acts as a purchase order for analytical services when no other contractual agreement is in effect. An example of a COC form may be found in Figure 23-1.

23.1.1 Field Documentation

The information the sampler needs to provide at the time of sampling on the container label is:

- Sample identification
- Date and time
- Preservative

During the sampling process, the COC form is completed and must be legible (see Figure 23-1). This form includes information such as:

- Client name, address, phone number and fax number (if available)
- Project name and/or number
- The sample identification
- Date, time and location of sampling
- Sample collectors name
- The matrix description
- The container description
- The total number of each type of container
- Preservatives used
- Analysis requested
- Requested turnaround time (TAT)
- Any special instructions
- Purchase Order number or billing information (e.g. quote number) if available
- The date and time that each person received or relinquished the sample(s), including their signed name.

If the matrix description is not available on the COC, the laboratory shall contact the client prior to proceeding.

The samples are stored in a cooler with ice, as applicable, and remain solely in the possession of the client's field technician until the samples are delivered to the laboratory. The sample collector must assure that each container is in his/her physical possession or in his/her view at all times, or stored in such a place and manner to preclude tampering. The field technician relinquishes the samples in writing on the COC form to the sample control personnel at the laboratory or to a TestAmerica courier. Samples are only considered to be received by lab when personnel at the laboratory have physical contact with the samples.

Note: Independent couriers are not required to sign the COC form.

23.1.2 Legal / Evidentiary Chain-of-Custody

If samples are identified for legal/evidentiary purposes on the COC, login will complete the custody seal, retain the shipping record with the COC, and initiate an internal COC form for laboratory use by analysts and a sample disposal record.

The legal COC records shall establish an intact, continuous record of the physical possession, storage and disposal of sample containers, collected samples, sample aliquots, and sample extracts or digestates. The COC records shall account for all time periods associated with the samples. For ease of discussion, the above-mentioned items shall be referred to as samples:

1. A sample is in someone's custody if:
    - *a.* It is in one's actual physical possession;
    - *b.* It is in one's view, after being in one's physical possession;
    - *c.* It is in one's physical possession and then locked or sealed so that no one can tamper with it; and/or
    - *d.* It is kept in a secured area, restricted to authorized personnel only.
2. The COC records shall identify all individuals who physically handled individual samples
3. When possible, the number of people who physically handle the sample should be minimized.
4. A designated sample custodian shall be appointed to be responsible for receiving, storing and distributing samples
5. Efforts shall be made to limit the number of COC documents
6. Legal COC shall begin at the point established by the federal or State oversight program. This may begin at the point that cleaned sample containers are provided by the laboratory or the time sample collection occurs.
7. The COC forms shall remain with the samples during transport or shipment.
8. If shipping containers and/or individual sample containers are submitted with sample custody seals and any seals are not intact, the custodian shall note this on the COC and the client shall be contacted.
9. Mailed packages should be registered with return receipt requested. If packages are sent by common carrier, receipts shall be retained as part of the permanent COC documentation.
10. Once received by the laboratory, laboratory personnel are responsible for the care and custody of the sample and must be prepared to testify that the sample was in their possession and within view or secured in the laboratory at all times, from the moment it was received from the custodian until the time that the analyses are completed or the time of sample disposal.

23.2 SAMPLE RECEIPT

Samples are received at the laboratory by designated sample receiving personnel and a unique laboratory project identification number is assigned. Each sample container shall be assigned a unique sample identification number that is cross-referenced to the client identification number such that traceability of samples is unambiguous and documented. Each sample container is affixed with a durable sample identification label. Sample acceptance, receipt, tracking and storage procedures are summarized in the following sections.

23.2.1 Laboratory Receipt

When samples arrive at the laboratory, sample receiving personnel inspect the coolers and samples per SOP RL-SRV-001. The integrity of each sample must be determined by comparing sample labels or tags with the COC and by visual checks of the container for possible damage. Any non-conformance, irregularity, or compromised sample receipt must be documented on a Sample Check-In Form and brought to the immediate attention of the client. The COC, shipping documents, documentation of any non-conformance, irregularity, or compromised sample receipt, record of client contact, and resulting instructions become part of the project record.

23.3 SAMPLE ACCEPTANCE POLICY

The laboratory has a written sample acceptance policy (Figure 23-2) that clearly outlines the circumstances under which samples shall be accepted or rejected. These include:

- a COC filled out completely;
- samples must be properly labeled;
- proper sample containers with adequate volume for the analysis and necessary QC;
- samples must be preserved according to the requirements of the requested analytical method;
- sample holding times must be adhered to method/SOP;
- the project manager will be notified if any sample is received in damaged condition.

23.3.1 After inspecting the samples, the sample receiving personnel sign and date the COC form, make any necessary notes of the samples' conditions and store them in appropriate storage locations.

23.3.2 Any deviations from the sample acceptance criteria, that question the suitability of the sample for analysis, or incomplete documentation as to the tests required will be resolved by consultation with the client. If the sample acceptance policy criteria are not met, the laboratory shall either:

- Retain all correspondence and/or records of communications with the client regarding the disposition of rejected samples, or

- Fully document any decision, agreed upon by the client, to proceed with sample analysis that does not meet sample acceptance criteria.

23.3.3 Sample Log-in

All samples that are received by the laboratory are logged into the LIMS to allow the laboratory to track and evaluate sample progress. Each group of samples that are logged in together (typically one project from a given client/sampling event) is assigned a unique job number or Sample Delivery Group (SDG). Within each job, each sample receives a unique number. Sample numbers are generated sequentially over time, and are not re-assigned. A sample may be composed of more than one bottle since different preservatives may be required to perform all analyses requested. Even if multiple containers are received for a single sample, each container is uniquely identified with alphabetic letters added to the sample number. The LIMS generates sample labels that are attached to each bottle for a given sample.

Each job/set of samples is logged into LIMS with a minimum of the following information:

- Client Name, Project Name, Address, Phone, Report to information, invoice to information (most of this information is "default information" that is stored in the LIMS).
- Date and time sampled;
- Date and time received;
- Job and/or project description, sample description;
- Sample matrix, special sample remarks;
- Reporting requirements (i.e., QC level, report format, invoicing format);
- TAT requirements;
- Parameters (methods and RLs or MDLs are default information for a given parameter)

Upon receipt of a sample with a short hold time analysis, the appropriate analyst is notified by phone. Also, during login, the LIMS will identify a short hold time analysis and e-mail the laboratory managers.

23.4 SAMPLE STORAGE AND TRACKING

In order to avoid deterioration, contamination or damage to a sample during storage and handling, from the time of receipt until all analyses are complete, samples are stored in clean, dry, isolated areas suitable for the sample matrix and levels of radioactivity. The storage areas are organized by Lot number to facilitate sample retrieval. Samples are stored away from standards and reagents, food, and other potential contamination sources. Samples of various types are segregated to minimize cross-contamination (example: bioassay samples are stored away from environmental samples).

Analysts and technicians retrieve the sample container allocated to their analysis from the designated storage location and analyze the sample. All unused portions of samples are returned to the secure designated sample control area.

The primary method for recording sample and fraction transfer is by using the electronic ICOC program. The sample containers, analytical batches, employees, SOP numbers and SOP revision numbers all have unique bar codes. The sample or batch, employee and SOP information is entered into the computer using bar codes or entered manually as described in the ICOC user guide. This electronic tracking system shall be used until the samples are disposed or returned to the client.

Access to the laboratory is controlled such that sample storage need not be locked at all times unless a project specifically demands it. Samples are accessible to laboratory personnel only. Visitors to the laboratory are prohibited from entering the laboratory areas unless accompanied by an employee of TestAmerica.

23.5 LABORATORY INTERNAL TRACKING

Tracking records shall include, by direct entry or linkage to other records:

1. Time of day and calendar date of each transfer or handling;
2. Signatures/Electronic entries of all personnel who physically handle samples;
3. All information necessary to produce unequivocal, accurate records that document the laboratory activities associated with sample receipt, preparation, analysis and reporting; and
4. COC forms received from the client and/or common carrier documents.

23.6 HAZARDOUS SAMPLES AND FOREIGN SOILS

To minimize exposure to personnel and to avoid potential accidents, hazardous and foreign soil samples are stored in a designated isolated area. For any sample that is known to be hazardous at the time of receipt or, if after completion of analysis the result exceeds the acceptable regulatory levels, the project manager shall indicate the need for isolation. For foreign soils, the sample itself is clearly marked with a red stamp, stamped on the sample label reading "HAZARDOUS" or "FOREIGN SOIL" and placed in a colored and/or marked bag to easily identify the sample. The date, log number, lab sample number, and the result or brief description of the hazard are all written on the Hazardous & Foreign Soil Sample Notice. A copy of the form must be included with the original COC and Work Order and the original must be given to the Sample Control Custodian. All hazardous samples are either returned to the client or disposed of appropriately through a hazardous waste disposal firm. Foreign soil samples are autoclaved or heat treated.

23.7 SAMPLE SHIPPING

In the event that the laboratory needs to ship samples, the samples are placed in a cooler with enough ice to ensure the samples remain between 0° and 6.0°C during transit. The samples are carefully surrounded by packing material to avoid breakage (yet maintain appropriate temperature). A trip blank is enclosed for those samples requiring water/solid volatile organic analyses (see Note). The chain-of-custody form is signed by the sample control technician and attached to the shipping paperwork. Samples are generally shipped overnight express or hand-delivered by a TestAmerica courier to maintain sample integrity. All personnel involved with shipping and receiving samples must be trained to maintain the proper chain-of-custody documentation and to keep the samples intact and on ice. The Environmental, Health and Safety Manual contains additional shipping requirements.

Note: If a client does not request trip blank analysis on the COC or other paperwork, the laboratory will not analyze the trip blanks that were supplied. However, in the interest of good client service, the laboratory will advise the client at the time of sample receipt that it was noted that they did not request analysis of the trip blank; and that the laboratory is providing the notification to verify that they are not inadvertently omitting a key part of regulatory compliance testing.

23.8 SAMPLE DISPOSAL

Samples should be retained for a minimum of 30 days after the project report is sent, however, provisions may be made for earlier disposal of samples once the holding time is exceeded. Some samples are required to be held for longer periods based on regulatory or client requirements. The laboratory must follow the longer sample retention requirements where required by regulation or client agreement. When required, the laboratory shall obtain client approval prior to disposal. Several possibilities for sample disposal exist: the sample may be consumed completely during analysis, the sample may be returned to the customer or location of sampling for disposal, or the sample may be disposed of in accordance with the laboratory's waste disposal procedures (SOP: RL-HS-006). All procedures in the laboratory Environmental, Health and Safety Manual are followed during disposal. Samples are normally maintained in the laboratory no longer than six months from receipt unless otherwise requested. Unused portions of samples found or suspected to be hazardous according to state or federal guidelines may be returned to the client upon completion of the analytical work.

If a sample is part of a known litigation, the affected legal authority, sample data user, and/or submitter of the sample must participate in the decision about the sample's disposal.

All documentation and correspondence concerning the disposal decision process must be kept on file. Pertinent information includes the date of disposal, nature of disposal (such as sample depletion, hazardous waste facility disposal, return to client) and names of individuals who conducted the arrangements and physically completed the task. The laboratory will remove or deface sample labels prior to disposal unless this is accomplished through the disposal method (e.g., samples are incinerated). A Waste Disposal Record shall be maintained.

Figure 23-1.

Example: Chain of Custody Form

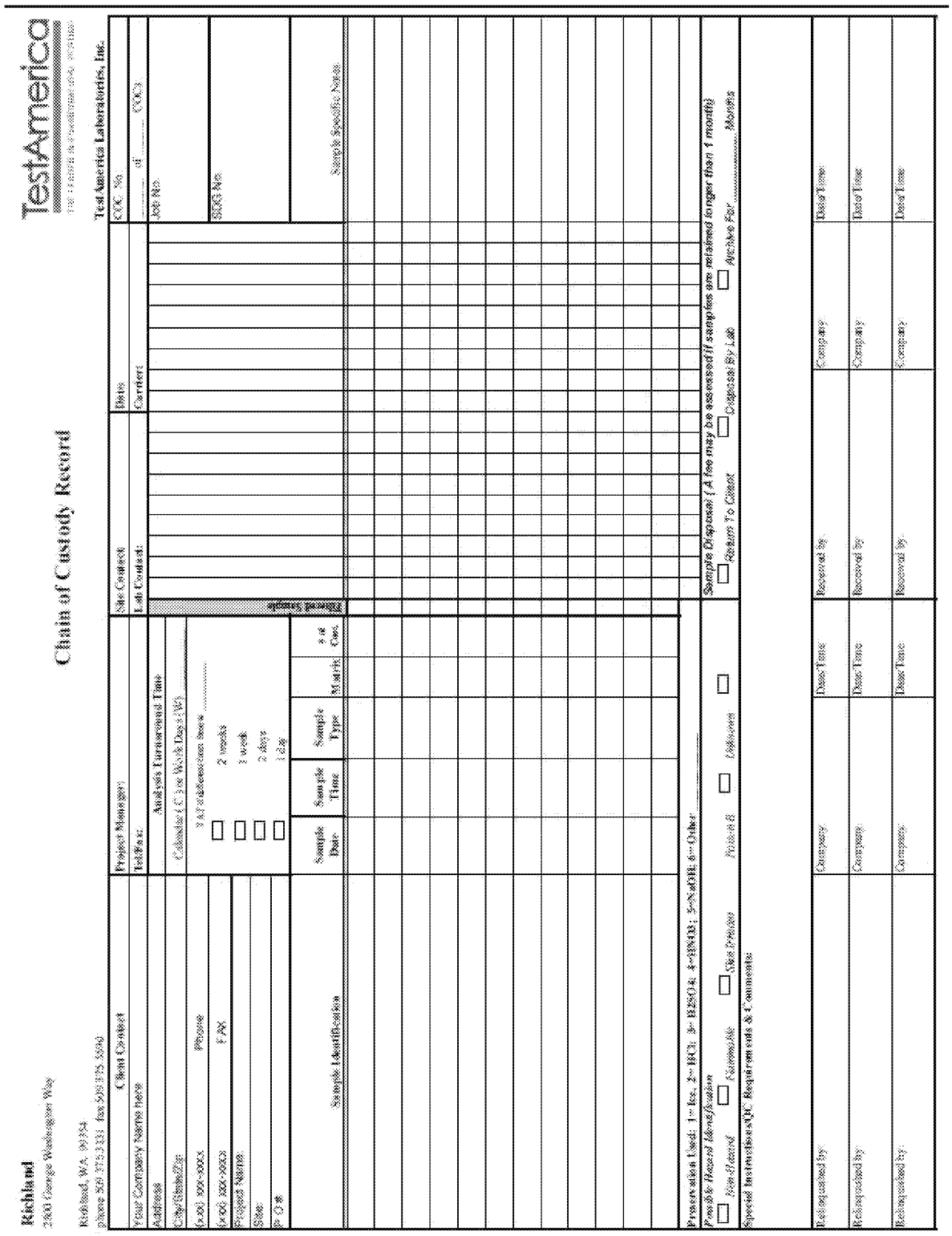

Figure 23-2. Sample Acceptance Policy

All incoming work will be evaluated against the criteria listed below. Where applicable, data from any samples that do not meet the criteria listed below will be noted on the laboratory report defining the nature and substance of the variation. In addition the client will be notified either by telephone, fax or e-mail ASAP after the receipt of the samples.

1) Samples must arrive with labels intact with a Chain of Custody filled out completely. **Information must be legible.** The following information must be recorded.
   - Client name, address, phone number and fax number (if available)
   - Project name and/or number
   - The sample identification
   - Date, time and location of sampling
   - The collectors name
   - The matrix description
   - The container description
   - The total number of each type of container
   - Preservatives used
   - Analysis requested
   - Requested TAT
   - Any special instructions
   - Purchase Order number or billing information (e.g. quote number) if available
   - The date and time that each person received or relinquished the sample(s), including their signed name.

2) Samples must be properly labeled.
   - Use durable labels
   - Include a unique identification number
   - Include sampling date and time & sampler ID
   - Include preservative used.
   - Use indelible ink
   - **Information must be legible**

Proper sample containers with adequate volume for the analysis and necessary QC are required for each analysis requested.

3) Samples must be preserved according to the requirements of the requested analytical method.

   - Chemical preservation (pH) will be verified prior to analysis and the project manager will be notified immediately if there is a discrepancy. If analyses will still be performed, it will be noted in the case narrative.

4) Sample Holding Times
   - TestAmerica will make every effort to analyze samples within the regulatory holding time. Samples must be received in the laboratory with enough time to perform the sample analysis.
   - Except for short holding time samples (< 48hr HT) sample must be received with at least 48 hrs remaining on the holding time for us to ensure analysis.

The project manager will be notified if any sample is received in damaged condition. TestAmerica will request that a sample be resubmitted for analysis.

SECTION 24
ASSURING THE QUALITY OF TEST RESULTS
(NELAC 5.5.9)

24.1 OVERVIEW

In order to assure our clients of the validity of their data, the laboratory continuously evaluates the quality of the analytical process. The analytical process is controlled not only by instrument calibration as discussed in Section 20, but also by routine process QC measurements (e.g. Blanks, LCS, MS and sample duplicates (DUP). These QC checks are performed as required by the method or regulations to assess precision and accuracy. In addition to the routine process QC samples, PT Samples (concentrations unknown to laboratory) are analyzed to help ensure laboratory performance.

QC samples shall be analyzed as part of the analytical batches. Batch QC samples shall be prepared and counted in the same time frame and with the same instrumentation configurations as the samples.

24.2 CONTROLS

Sample preparation or pre-treatment is commonly required before analysis. Typical preparation steps include homogenization, grinding, acid digestion, distillation, evaporation, drying and ashing. During these pre-treatment steps, samples are arranged into manageable groups referred to as preparation (prep) batches. Prep batches provide a means to control variability in sample treatment. Control samples are added to each prep batch to monitor method performance and are processed through the entire analytical procedure with investigative/field samples.

24.3 NEGATIVE CONTROLS

24.3.1 Method Blanks and reagent blanks are used to assess preparation and analysis for possible contamination during the preparation and processing steps.

24.3.1.1 The method blank is prepared from a clean matrix similar to that of the associated samples that is free from target analytes, when possible (e.g., Reagent water, Ottawa sand, glass beads, filters, Teflon chips, etc.) and is processed along with and under the same conditions as the associated samples. Reagent blanks consist of reagents and reagent water.

24.3.1.2 The method blank goes through all of the steps of the process (including as necessary: filtration, clean-ups, etc.). The method blank sample shall be prepared with similar aliquot size to that of routine samples.

24.3.1.3 The specific frequency of use for method blanks during the analytical sequence is generally one for each batch of samples; not to exceed 20 samples.

24.3.1.4 Evaluation criteria and corrective action for method blanks is defined in the specific SOP for data review. Generally, corrective action is taken if the concentration of a target analyte in the blank is above the RL, MDC or MDL as established by the method or regulation:

- The source of contamination is investigated
- Measures are taken to minimize or eliminate the source of the contamination

- Affected samples are reprocessed or the results are qualified on the final report. DOE clients shall be contacted to discuss implementation of corrective action and the documentation of the corrective action shall be included in the case narrative.

24.4 POSITIVE CONTROLS

Control samples (e.g., QC indicators) are analyzed with each batch of samples to evaluate data based upon (1) Method Performance [LCS or Blank Spike (BS)], which includes both the preparation and measurement steps; and (2) Matrix Effects (MS or Sample DUP), which evaluates field sampling accuracy, precision, representativeness, interferences, and the effect of the matrix on the method performed. Each regulatory program and each method within those programs specify the control samples that are prepared and/or analyzed with a specific batch.

Note that frequency of control samples vary with specific regulatory, methodology and project specific criteria. Complete details on method control samples are as listed in each data review SOP.

The laboratory standards used to prepare the LCSs and MSs shall be from a source independent of the standards used for calibration. The radiochemical LCS and MS activities shall be at least 5 times the RDL.

24.4.1 Method Performance Control - Laboratory Control Sample

24.4.1.1 The LCS measures the accuracy of the method in a blank matrix and assesses method performance independent of potential field sample matrix affects in a laboratory batch.

24.4.1.2 The LCS is prepared from a clean matrix similar to that of the associated samples that is free from target analytes (for example: Reagent water, Ottawa sand, glass beads, Teflon chips etc.) and is processed along with and under the same conditions as the associated samples. The LCS is spiked with verified known amounts of analytes or is made of a material containing known and verified amounts of analytes, taken through all preparation and analysis steps along with the field samples. In some instances where there is no practical clean solid matrix available, an aqueous LCS may be processed for solid matrices.

24.4.1.3 The LCS shall be prepared with similar aliquot size to that of routine samples.

24.4.1.4 The specific frequency of use for a LCS during the analytical sequence is generally one for each batch of samples; not to exceed 20 samples.

24.5 SAMPLE MATRIX CONTROLS

24.5.1 Matrix Spikes

24.5.1.1 The Ms is used to assess the effect the sample matrix has on the precision and accuracy of the results generated by the method used.

24.5.1.2 An MS is essentially a sample fortified with a known amount of the test analyte(s). At a minimum, with each matrix-specific batch of samples processed, an MS is carried through the complete analytical procedure. Unless specified by the client, samples used for spiking are randomly selected and rotated between different client projects.

24.5.1.3 Unless otherwise specified, matrix spikes are not required for radiochemical analyses if an isotopic tracer or carrier is used in the analysis, or for gross alpha, gross beta, gamma or non-aqueous tritium.

For radiochemical analyses, the acceptance limits are specified in RL-DR-001. If the sample activity is greater than five times the spiking level, the acceptance criteria does not have to be met.

24.5.2 Duplicates

24.5.2.1 For a measure of analytical precision, with each matrix-specific batch of samples processed, a sample DUP, matrix spike duplicate (MSD), or LCS duplicate (LCSD) is carried through the complete analytical procedure. Duplicate samples are usually analyzed with methods that do not require matrix spike analysis. LCSDs are normally not performed except when regulatory agencies or client specifications require them. The recoveries for the spiked duplicate samples must meet the same laboratory established recovery limits as the LCS. If an LCSD is analyzed both the LCS and LCSD must meet the same recovery criteria and be included in the final report.

24.6 ACCEPTANCE CRITERIA (CONTROL LIMITS)

See RL-DR-001 or specific analytical SOP for acceptance criteria. Regulatory or project specific control limits may supersede laboratory defined limits.

An LCS that is within the acceptance criteria establishes that the analytical system is in control and is used to validate the process. Samples that are analyzed with an LCS with recoveries outside of the acceptance limits may be determined as out of control and should be reanalyzed if possible. If reanalysis is not possible, then the results for all affected analytes for samples within the same batch must be qualified when reported. The internal corrective action process (see Section 12) is also initiated if an LCS exceeds the acceptance limits.

If an MS/MSD does not meet acceptance limits, the MS/MSD and the associated spiked sample are reported with a qualifier for those analytes that do not meet limits. If obvious preparation errors are suspected, or if requested by the client, unacceptable MS/MSDs are reprocessed and reanalyzed to prove matrix interference. A more detailed discussion of acceptance criteria and corrective action can be found in the lab's method SOPs and in Section 12.

SECTION 25
REPORTING RESULTS
(NELAC 5.5.10)

25.1 OVERVIEW

The results of each test are reported accurately, clearly, unambiguously, and objectively in accordance with State and Federal regulations as well as client requirements. Analytical results are issued in a format that is intended to satisfy customer and laboratory accreditation requirements as well as provide the end user with the information needed to properly evaluate the results. Where there is conflict between client requests and laboratory ethics or regulatory requirements, the laboratory's ethical and legal requirements are paramount, and the laboratory will work with the client during project set up to develop an acceptable solution. Refer to Section 7. A variety of report formats are available to meet specific needs.

In cases where a client asks for simplified reports, there must be a written request from the client. There still must be enough information that would show any analyses that were out of conformance (QC out of limits) and there should be a reference to a full report that is made available to the client.

25.2 TEST REPORTS

Analytical results are reported in a format that is satisfactory to the client and meets all requirements of applicable accrediting authorities and agencies. A variety of report formats are available to meet specific needs. The report is printed on laboratory letterhead, reviewed, and signed by the appropriate project manager. At a minimum, the standard laboratory report shall contain the following information:

25.2.1 A report title (e.g. Analytical Report For Samples) .

25.2.2 A unique identification of the report (e.g. work order number) and on each page an identification in order to ensure the page is recognized as part of the report and a clear identification of the end.

Note: Page numbers of the report are represented as page # of ##. Where the first number is the page number and the second is the total number of pages. Or, the total number of pages are listed on the first page of the report as long as the subsequent pages are identified by the unique report identification and consecutive numbers.

25.2.3 A copy of the COC form.

- Any COCs involved with Subcontracting are included.

25.2.4 The name and address of client and a project name/number, if applicable.

25.2.5 Client project manager or other contact

25.2.6 Description and unambiguous identification of the tested sample(s) including the client identification code.

25.2.7 Date of receipt of sample, date and time of collection, and date(s) of test preparation and performance, and time of preparation or analysis if the required holding time for either activity is less than or equal to 72 hours OR if the tests are to be conducted for a client requiring DoD ELAP accreditation.

25.2.8 Date reported or date of revision, if applicable.

25.2.9 Method of analysis including method code (EPA, Standard Methods, etc).

25.2.10 Practical quantitation limits or RL.

25.2.11 Method detection limits or Minimum Detectable Concentration (if applicable)

25.2.12 Definition of Data qualifiers and reporting acronyms (e.g. ND).

NOTE [DoD QSM Grey Box 47]: For DoD clients that do not specify project-specific data qualifiers, the following data qualifiers (or equivalent) must be used in reports:

U – Analyte was not detected and is reported as less than the LOD or as defined by the client. The LOD has been adjusted for any dilution or concentration of the sample (* see Example, below).

J – The reported result is an estimated value (e.g., matrix interference was observed or the analyte was detected at a concentration outside the quantitation range, see Box 33).

B – Blank contamination. The recorded result is associated with a contaminated blank (see Box D-1).

N – Non-target analyte. The analyte is a tentatively identified compound using mass spectrometry.

Q – One or more quality control criteria failed (e.g., LCS recovery, surrogate spike recovery or CCV).

25.2.13 Sample results with units specified. When required by the client, include a statement on the estimated uncertainty of measurements.

25.2.14 QC data consisting of method blank, LCS, and MS/MSD recoveries.

25.2.15 Condition of samples at receipt. This may be accomplished in a narrative or by attaching sample login sheets.

25.2.16 A statement to the effect that the results relate only to the items tested and the sample as received by the laboratory.

25.2.17 A signature and title of the person(s) accepting responsibility for the content of the report and date of issue. Signatories are appointed by the Lab Director. Refer to the Corporate SOP on Electronic Reporting and Signature Policy (No. CA-I-P-002) for details on internally applying electronic signatures of approval.

When NELAC accreditation is required, the lab shall certify that the test results meet all requirements of NELAC or provide reasons and/or justification if they do not. ***Example: "At the time of analysis the laboratory was in compliance with the current NELAC standards and held accreditation for all analyses performed unless noted by a qualifier. The labs accreditation number is _____".***

25.2.18 Where applicable, a narrative to the report that explains the issue(s) and corrective action(s) taken in the event that a specific accreditation or certification requirement was not met.

25.2.19 Appropriate laboratory certification number for the state of origin of the sample, if applicable.

25.2.20 If only part of the report is provided to the client (client requests some results before all of it is complete), it must be clearly indicated on the report (e.g., partial or preliminary report). A complete report must be sent once all of the work has been completed.

25.2.21 Any non-TestAmerica subcontracted analysis results are provided as a separate report on the official letterhead of the subcontractor. All TestAmerica subcontracting is clearly identified on the report as to which laboratory performed a specific analysis.

25.3 REPORTING LEVEL OR REPORT TYPE

TestAmerica Richland laboratory offers four levels of QC reporting. Each level, in addition to its own specific requirements, contains all the information provided in the preceding level. The packages provide the following information in addition to the information described above:

- Level I is a report with the features described in Section 25.2 above.
- Level II is a Level I report plus summary information, including results for the method blank, percent recovery for LCS and matrix spike samples, and the RPD/RER values for all MSD and sample duplicate analyses.
- Level III contains all the information supplied in Level II, but presented on the CLP-like summary forms, and relevant calibration information. A Level II report is not included, unless specifically requested. No raw data is provided.
- Level IV is the same as Level III with the addition of all raw supporting data.

In addition to the various levels of QC packaging, the laboratory also provides reports in diskette deliverable form. Initial reports may be provided to clients by facsimile/e-mail. Procedures used to ensure client confidentiality are outlined in Section 25.6.

25.3.1 Electronic Data Deliverables

EDDs are routinely offered as part of TestAmerica's services. The laboratory offers a variety of EDD formats including the U.S. Air Force Environmental Restoration Information Management System (ERPIMS), Excel, Dbase and Text Files.

EDD specifications are submitted to the IT department by the PM for review and undergo the contract review process. Once the facility has committed to providing data in a specific electronic format, the coding of the format may need to be performed. This coding is documented and validated. The validation of the code is retained by the IT staff coding the EDD.

Each EDD shall be subject to a review to ensure accuracy and completeness. If EDD generation is automated, review may be reduced to periodic screening if the laboratory can demonstrate that it can routinely generate that EDD without errors. Any revisions to the EDD format must be reviewed until it is demonstrated that it can routinely be generated without errors. If the EDD can be reproduced accurately and if all subsequent EDDs can be produced error-free, each EDD does not necessarily require a review.

25.4 SUPPLEMENTAL INFORMATION FOR TEST

The lab identifies any unacceptable QC analyses or any other unusual circumstances or observations such as environmental conditions and any non-standard conditions that may have affected the quality of a result. This is typically in the form of a footnote or a qualifier and/or a narrative explaining the discrepancy in the front of the report.

25.4.1 Where quality system requirements are not met, a statement of compliance/non-compliance with requirements and/or specifications is required, including identification of test results derived from any sample that did not meet NELAC sample acceptance requirements such as improper container, holding time, or temperature.

25.4.2 Opinions and Interpretations - The test report contains objective information, and generally does not contain subjective information such as opinions and interpretations. If such information is required by the client, the Laboratory Director will determine if a response can be prepared. If so, the Laboratory Director will designate the appropriate member of the management team to prepare a response. The response will be fully documented, and reviewed by the Laboratory Director, before release to the client. There may be additional fees charged to the client at this time, as this is a non-routine function of the laboratory.

When opinions or interpretations are included in the report, the laboratory provides an explanation as to the basis upon which the opinions and interpretations have been made. Opinions and interpretations are clearly noted as such and where applicable, a comment should be added suggesting that the client verify the opinion or interpretation with their regulator. For DOE clients, client approval must be obtained prior to adding opinions and interpretations in a case narrative.

25.5 ENVIRONMENTAL TESTING OBTAINED FROM SUBCONTRACTORS

If the laboratory is not able to provide the client the requested analysis, the samples would be subcontracted following the procedures outlined in Section 8.

Data reported from analyses performed by a subcontractor laboratory are clearly identified as such on the analytical report provided to the client. Results from a subcontract laboratory outside of the TestAmerica network are reported to the client on the subcontract laboratory's original report stationary and the report includes any accompanying documentation.

25.6 CLIENT CONFIDENTIALITY POLICY

In situations involving the transmission of environmental test results by telephone, facsimile or other electronic means, client confidentiality must be maintained.

TestAmerica will not intentionally divulge to any person (other than the Client or any other person designated by the Client in writing) any information regarding the services provided by TestAmerica or any information disclosed to TestAmerica by the Client. Furthermore, information known to be potentially endangering to national security or an entity's proprietary rights will not be released.

Note: TestAmerica Richland laboratory does not have the facilities to protect classified information or samples, and does not accept such information or materials.

Note: This policy shall not apply to the extent that the information is required to be disclosed by TestAmerica under the compulsion of legal process. TestAmerica will, to the extent feasible, provide reasonable notice to the client before disclosing the information.

Note: Authorized representatives of an accrediting authority are permitted to make copies of any analyses or records relevant to the accreditation process, and copies may be removed from the laboratory for purposes of assessment.

25.6.1 Report deliverable formats are discussed with each new client. If a client requests that reports be faxed or e-mailed, the reports are faxed with a cover sheet or e-mailed with the following note that includes a confidentiality statement similar to the following:

This material is intended only for the use of the individual(s) or entity to whom it is addressed, and may contain information that is privileged and confidential. If you are not the intended recipient, or the employee or agent responsible for delivering this material to the intended recipient, you are hereby notified that any dissemination, distribution or copying of this communication is strictly prohibited. If you have received this communication in error, please notify us immediately by telephone at the 1-509-375-3131 (or for e-mails: please notify us immediately by e-mail or by phone (1-509-375-3131) and delete this material from any computer).

25.7 FORMAT OF REPORTS

The format of reports is designed to accommodate each type of environmental test carried out and to minimize the possibility of misunderstanding or misuse.

25.8 AMENDMENTS TO TEST REPORTS

Corrections, additions, or deletions to reports are only made when justification arises through supplemental documentation. Justification is documented using the laboratory's corrective action system (refer to Section 12) and included in the amended report.

When the amended report is issued, a notation of Amended Report is placed in the header on every page of the report, and the case narrative will contain a brief explanation of reason for the re-issue. The amended report will meet the same requirements at the original report.

When the report is re-issued, a notation of Amended Report is placed on the cover/signature page of the report or at the top of the narrative page with a brief explanation of reason for the re-issue.

25.9 POLICIES ON CLIENT REQUESTS FOR AMENDMENTS

25.9.1 Sample Reanalysis Policy

Because there is a certain level of uncertainty with any analytical measurement a sample reanalysis may result in either a higher or lower value from an initial sample analysis. There are also variables that may be present (e.g. sample homogeneity, analyte precipitation over time, etc.) that may affect the results of a reanalysis. The data review SOPs address protocols for reanalysis.

25.9.2 Policy on Data Omissions or Reporting Limit Increases

Fundamentally, our policy is simply to not omit previously reported results (including data qualifiers). This policy has few exceptions. Exceptions are:

- Laboratory error.
- Sample identification is indeterminate (confusion between COC and sample labels).

- An incorrect analysis (not analyte) was requested. A written request for the change is required.
- Incorrect limits reported based on regulatory requirements.
- The requested change has absolutely *no possible* impact on the interpretation of the analytical results and there is *no possibility* of the change being interpreted as misrepresentation by anyone inside or outside of our company.

25.9.3 Multiple Reports

TestAmerica does not issue multiple reports for the same work order where there is different information on each report (this does not refer to copies of the same report) unless required to meet regulatory needs and approved by QA.

25.10 CLIENT-SPECIFIC PERIODIC REPORTS

Certain clients may require reporting other than test reports, usually on a periodic basis for regulatory, quality assurance, or other needs. Such reports are prepared according to client requirements in custom format.

Appendix 1. Laboratory Floor Plan

TestAmerica
THE LEADER IN ENVIRONMENTAL TESTING

Richland Floor Plan

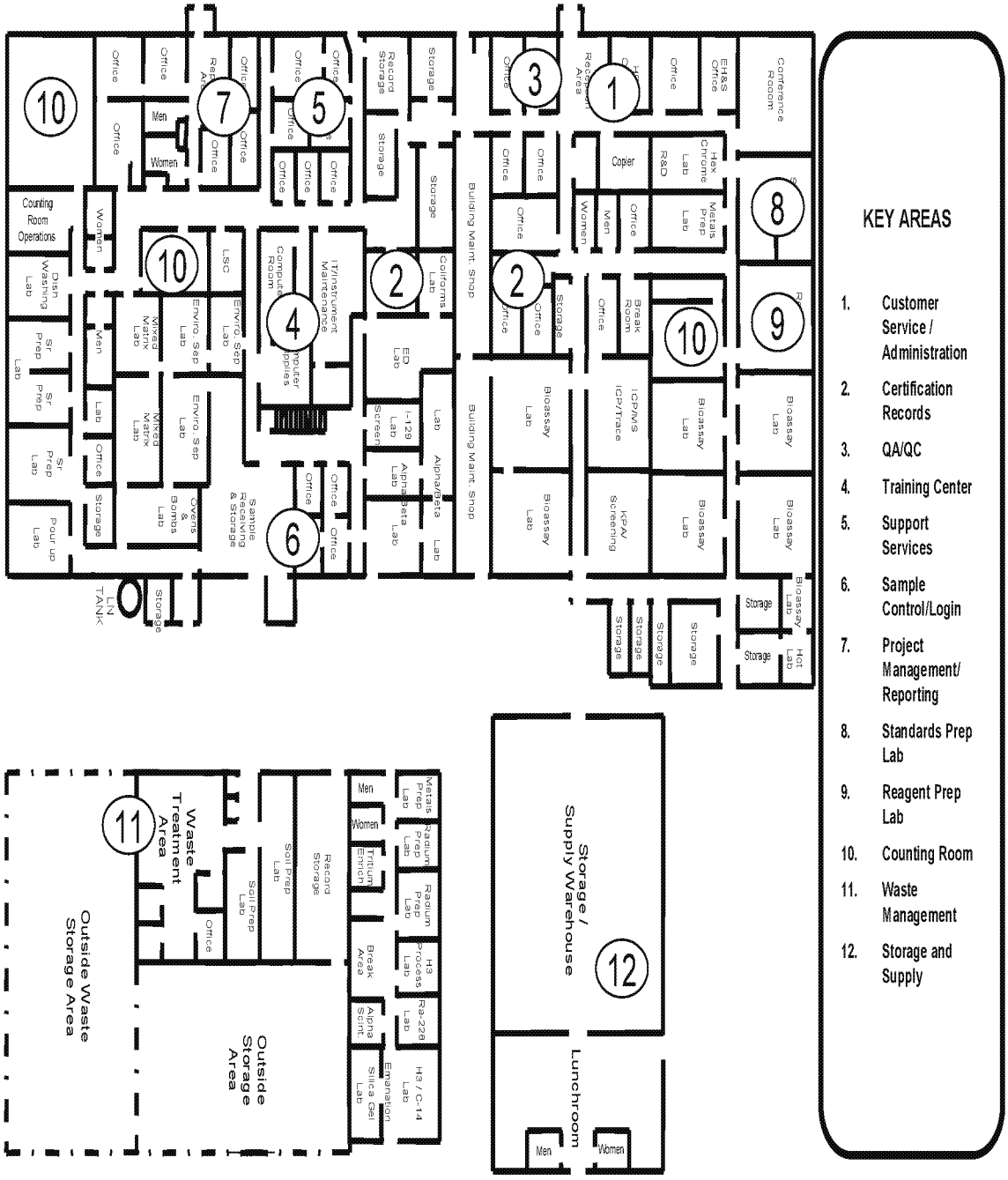

Appendix 2. Glossary/Acronyms

Glossary:

Acceptance Criteria:
Specified limits placed on characteristics of an item, process, or service defined in requirement documents. (ASQC)

Accreditation:
The process by which an agency or organization evaluates and recognizes a laboratory as meeting certain predetermined qualifications or standards, thereby accrediting the laboratory. In the context of the National Environmental Laboratory Accreditation Program (NELAP), this process is a voluntary one. (NELAC)

Accrediting Authority:
The Territorial, State, or Federal Agency having responsibility and accountability for environmental laboratory accreditation and which grants accreditation (NELAC) [1.5.2.3]

Accuracy:
The degree of agreement between an observed value and an accepted reference value. Accuracy includes a combination of random error (precision) and systematic error (bias) components which are due to sampling and analytical operations; a data quality indicator.

Analyst:
The designated individual who performs the "hands-on" analytical methods and associated techniques and who is the one responsible for applying required laboratory practices and other pertinent quality controls to meet the required level of quality. (NELAC)

Batch:
Environmental/radiobioassay samples which are prepared and/or analyzed together with the same process and personnel, using the same lot(s) of reagents. A preparation batch is composed of one to 20 samples of the same matrix, meeting the above mentioned criteria and with a maximum time between the start of processing of the first and last sample in the batch to be 24 hours. An analytical batch is composed of prepared environmental samples (extracts, digestates or concentrates) and /or those samples not requiring preparation, which are analyzed together as a group using the same calibration curve or factor. An analytical batch can include samples originating from various environmental matrices and can exceed 20 samples. (NELAC Quality Systems Committee)

Blank:
A sample that has not been exposed to the analyzed sample stream in order to monitor contamination during sampling, transport, storage or analysis. The blank is subjected to the usual analytical and measurement process to establish a zero baseline or background value and is sometimes used to adjust or correct routine analytical results. (ASQC)

Blind Sample:
A sample for analysis with a composition known to the submitter. The analyst/laboratory may know the identity of the sample but not its composition. It is used to test the analyst's or laboratory's proficiency in the execution of the measurement process.

Calibration:
To determine, by measurement or comparison with a standard, the correct value of each scale reading on a meter, instrument, or other device. The levels of the applied calibration standard should bracket the range of planned or expected sample measurements. (NELAC)

Calibration Curve:
The graphical relationship between the known values, such as concentrations, of a series of calibration standards and their instrument response. (NELAC)

Calibration Method:
A defined technical procedure for performing a calibration. (NELAC)

Calibration Standard:
A substance or reference material used to calibrate an instrument

Carrier:
Carriers are chemically similar materials or stable counterparts of radioactive isotope(s) to be measured. When used, carriers are added to all samples in an analytical batch so that each sample has a specific measurable QC parameter (yield). The carrier yield is used in the data calculations to correct for all sources of analytical losses. The term carrier can also be used for a non-radioactive compound added to assist in isolation of the target analyte(s).

Certified Reference Material (CRM):
A reference material one or more of whose property values are certified by a technically valid procedure, accompanied by or traceable to a certificate or other documentation which is issued by a certifying body. (ISO Guide 30–2.2)

Chain of Custody:
An unbroken trail of accountability that ensures the physical security of samples and includes the signatures of all who handle the samples. (NELAC) [5.12.4]

Clean Air Act:
The enabling legislation in 42 U.S.C. 7401 et seq., Public Law 91-604, 84 Stat. 1676 Pub. L. 95-95, 91 Stat., 685 and Pub. L. 95-190, 91 Stat., 1399, as amended, empowering EPA to promulgate air quality standards, monitor and enforce them. (NELAC)

Comprehensive Environmental Response, Compensation and Liability Act of 1980 (CERCLA/SUPERFUND):
The enabling legislation in 42 U.S.C. 9601-9675 et seq., as amended by the Superfund Amendments and Reauthorization Act of 1986 (SARA), 42 U.S.C. 9601 et seq., to eliminate the health and environmental threats posed by hazardous waste sites. (NELAC)

Compromised Samples:
Those samples which are improperly sampled, insufficiently documented (chain of custody and other sample records and/or labels), improperly preserved, collected in improper containers, or exceeding holding times when delivered to a laboratory. Under normal conditions, compromised samples are not analyzed. If an emergency situation requires analysis, the results must be appropriately qualified. (NELAC)

Confidential Business Information:
CBI is information that an organization designates as having the potential of providing a competitor with inappropriate insight into its management, operation or products. NELAC and its representatives agree to safeguarding identified CBI and to maintain all information identified as such in full confidentiality.

Conformance:
An affirmative indication or judgment that a product or service has met the requirements of the relevant specifications, contract, or regulation; also the state of meeting the requirements.

Corrective Action:
The action taken to eliminate the causes of an existing nonconformity, defect or other undesirable situation in order to prevent recurrence. (ISO 8402)

Data Audit:
A qualitative and quantitative evaluation of the documentation and procedures associated with sample measurements to verify that the resulting data re of acceptable quality (i.e., that they meet specified acceptance criteria). (NELAC)

Data Integrity:
1. The condition that exists when data is unchanged from its source and has not been accidentally or maliciously modified, altered, or destroyed.
2. The condition in which data are identically maintained during any operation, such as transfer, storage, and retrieval.
3. The preservation of data for their intended use.
4. Relative to specified operations, the *a priori* expectation of data quality. (NCSS.gov, National Information Assurance Glossary)

Data Reduction:
The process of transforming raw data by arithmetic or statistical calculations, standard curves, concentration factors, etc., and collation into a more useable form. [EPA Quality Assurance Division (EPA - QAD)]

Deficiency:
An unauthorized deviation from acceptable procedures or practices, or a defect in an item. (ASQC)

Detection Limit:
The lowest concentration or amount of the target analyte that can be identified, measured, and reported with confidence that the analyte concentration is not a false positive value. See Method Detection Limit. (NELAC)

Document Control:
The act of ensuring that documents (and revisions thereto) are proposed, reviewed for accuracy, approved for release by authorized personnel, distributed properly, and controlled to ensure use of the correct version at the location where the prescribed activity if performed. (ASQC)

Duplicate Analyses:
The analyses or measurements of the analyte of interest performed identically on two subsamples of the same sample. The results from duplicate analyses are used to evaluate analytical or measurement precision but not the precision of sampling, preservation or storage internal to the laboratory. (EPA-QAD)

Environmental Detection Limit (EDL):
The smallest level at which a radionuclide in an environmental medium can be unambiguously distinguished for a given confidence interval using a particular combination of sampling and measurement procedures, sample size, analytical detection limit, and processing procedure. The EDL shall be specified for the 0.95 or greater confidence interval. The EDL shall be established initially and verified annually for each test method and sample matrix. See also Maximum Detectable Concentration. (NELAC Radioanalysis Subcommittee)

Equipment Blank:
Sample of analyte-free media which has been used to rinse common sampling equipment to check effectiveness of decontamination procedures. (NELAC)

External Standard Calibration:
Calibrations for methods that do not utilize internal standards to compensate for changes in instrument conditions.

Federal Water Pollution Control Act (Clean Water Act, CWA):
The enabling legislation under 33 U.S.C. 1251 et seq., Public Law 92-50086 Stat 816, that empowers EPA to set discharge limitations, write discharge permits, monitor, and bring enforcement action for non-compliance. (NELAC)

Field Blank:
Blank prepared in the field by filling a clean container with pure de-ionized water and appropriate preservative, if any, for the specific sampling activity being undertaken (EPA Office of Solid Waste and Emergency Response)

Field of Testing:
The NELAC approach to accrediting laboratories by program, method and analyte. Laboratories requesting accreditation for a program-method-analyte combination or for an up-dated/improved method are required to submit to only that portion of the accreditation process not previously addressed (see NELAC, section 1.9ff). (NELAC)

Holding Times (Maximum Allowable Holding Times):
The maximum times that samples may be held prior to analyses and still be considered valid or not compromised. (40 CFR 136)

Instrument Blank:
A clean sample (e.g., distilled water) processed through the instrumental steps of the measurement process; used to determine instrument contamination. (EPA-QAD)

JD Edwards:
Corporate finance and accounting control program.

Laboratory:
A defined facility performing radiobioassay/environmental analyses in a controlled and scientific manner. (NELAC)

Laboratory Control Sample (however named, such as laboratory fortified blank, spiked blank, or QC check sample):
A sample matrix, free from the analytes of interest, spiked with verified known amounts of analytes or a material containing known and verified amounts of analytes, taken through all preparation and analysis steps. Where there is no preparation taken for an analysis (such as in aqueous volatiles), or when all samples and standards undergo the same preparation and analysis process (such as Phosphorus), there is no LCS. It is generally used to establish intra-laboratory or analyst specific precision and bias or to assess the performance of all or a portion of the measurement system.

An LCS shall be prepared at a minimum of 1 per batch of 20 or less samples per matrix type per sample extraction or preparation method except for analytes for which spiking solutions are not available such as total suspended solids, total dissolved solids, total volatile solids, total solids, pH, color, odor, temperature, dissolved oxygen or turbidity. The results of these samples shall be used to determine batch acceptance.
Note: NELAC standards allow a matrix spike to be used in place of this control as long as the acceptance criteria are as stringent as for the LCS. (NELAC)

Laboratory Duplicate:
Aliquots of a sample taken from the same container under laboratory conditions and processed and analyzed independently. (NELAC)

Least Squares Regression (1st Order Curve):
The least squares regression is a mathematical calculation of a straight line over two axes. The y axis represents the instrument response (or Response ratio) of a standard or sample and the x axis represents the concentration. The regression calculation will generate a correlation coefficient (r) that is a measure of the "goodness of fit" of the regression line to the data. A value of 1.00 indicates a perfect fit. In order to be used for quantitative purposes, r must be greater than or equal to 0.99 for organic and 0.995 for inorganic analyses.

Limit of Detection:
An LOD is an estimate of the minimum amount of a substance that an analytical process can reliably detect. An LOD is analyte- and matrix-specific and may be laboratory dependent. (Analytical Chemistry, 55, p.2217, December 1983, modified) See also Method Detection Limit.

Matrix:
The component or substrate that contains the analyte of interest. For purposes of batch and QC requirement determinations, the following matrix distinctions shall be used:

Aqueous: any aqueous sample excluded from the definition of Drinking Water matrix or Saline/Estuarine source. Includes surface water, groundwater, effluents, and Toxicity Characteristic Leaching Procedure (TCLP) or other extracts.

Drinking Water: any aqueous sample that has been designated as a potable or potential potable water source.

Saline/Estuarine: any aqueous sample from an ocean or estuary, or other salt water source such as the Great Salt Lake.

Non-aqueous Liquid: any organic liquid with 15% settleable solids.

Biological Tissue: any sample of a biological origin such as fish tissue, shellfish, or plant material. Such samples shall be grouped according to origin.

Radiobioassay: urine or fecal material.

Solids: includes soils, sediments, sludges, and other matrices with 15% settleable solids.

Chemical Waste: a product or by-product of an industrial process that results in a matrix not previously defined.

Air: whole gas or vapor samples including those contained in flexible or rigid wall containers and the extracted concentrated analytes of interest from a gas or vapor that are collected with a sorbent tube, impinger solution, filter, or other device. (NELAC)

Matrix Spike (spiked sample or fortified sample):

Prepared by adding a known amount of target analyte to a specified amount of matrix sample for which an independent estimate of target analyte concentration is available. Matrix spikes are used, for example, to determine the effect of the matrix on a method's recovery efficiency.

Matrix spikes shall be performed at a frequency of one in 20 samples per matrix type per sample extraction or preparation method except for analytes for which spiking solutions are not available such as, total suspended solids, total dissolved solids, total volatile solids, total solids, pH, color, odor, temperature, dissolved oxygen or turbidity. The selected sample(s) shall be rotated among client samples so that various matrix problems may be noted and/or addressed. Poor performance in a matrix spike may indicate a problem with the sample composition and shall be reported to the client whose sample was used for the spike.

Matrix Spike Duplicate (spiked sample or fortified sample duplicate):
A second replicate matrix spike is prepared in the laboratory and analyzed to obtain a measure of the precision of the recovery for each analyte.

Matrix spike duplicates or laboratory duplicates shall be analyzed at a minimum of 1 in 20 samples per matrix type per sample extraction or preparation method. The laboratory shall document their procedure to select the use of an appropriate type of duplicate. The selected sample(s) shall be rotated among client samples so that various matrix problems may be noted and/or addressed. Poor performance in the duplicates may indicate a problem with the sample composition and shall be reported to the client whose sample was used for the duplicate.

Method Blank:
A sample of a matrix similar to the batch of associated samples (when available) that is free from the analytes of interest and is processed simultaneously with and under the same conditions as samples through all steps of the analytical procedures, and in which no target analytes or interferences are present at concentrations that impact the analytical results for sample analyses. (NELAC)

Method Detection Limit:

The minimum concentration of a substance (an analyte) that can be measured and reported with 99% confidence that the analyte concentration is greater than zero and is determined from analysis of a sample in a given matrix containing the analyte. (40 CFR 136, Appendix B)

Minimum Detectable Concentration - The MDC is defined as the smallest concentration of an analyte (activity or mass) in a sample that can be detected with a 5% probability of erroneously detecting activity, when in fact none was present (Type I error) and also, a 5% probability of not detecting activity, when in fact it is present (Type II error). Often used interchangeably with Minimum Detectable Activity, since the difference between the two terms is only one of unit conversion.

National Environmental Laboratory Accreditation Conference (NELAC):
A voluntary organization of State and Federal environmental officials and interest groups purposed primarily to establish mutually acceptable standards for accrediting environmental laboratories. A subset of NELAP. (NELAC)

National Environmental Laboratory Accreditation Program (NELAP):
The overall National Environmental Laboratory Accreditation Program of which NELAC is a part. (NELAC)

Negative Control:
Measures taken to ensure that a test, its components, or the environment do not cause undesired effects, or produce incorrect test results. (NELAC)

NELAC Standards:
The plan of procedures for consistently evaluating and documenting the ability of laboratories performing environmental measurements to meet nationally defined standards established by the National Environmental Laboratory Accreditation Conference. (NELAC)

Performance Audit:
The routine comparison of independently obtained qualitative and quantitative measurement system data with routinely obtained data in order to evaluate the proficiency of an analyst or laboratory. (NELAC)

Performance Based Measurement System (PBMS):
A set of processes wherein the data quality needs, mandates or limitations of a program or project are specified and serve as criteria for selecting appropriate test methods to meet those needs in a cost-effective manner. (NELAC)

Positive Control:
Measures taken to ensure that a test and/or its components are working properly and producing correct or expected results from positive test subjects. (NELAC)

Precision:
The degree to which a set of observations or measurements of the same property, obtained under similar conditions, conform to themselves; a data quality indicator. Precision is usually expressed as standard deviation, variance or range, in either absolute or relative terms. (NELAC)

Preservation:
Refrigeration and/or reagents added at the time of sample collection (or later) to maintain the chemical and/or biological integrity of the sample. (NELAC)

Proficiency Testing:
A means of evaluating a laboratory's performance under controlled conditions relative to a given set of criteria through analysis of unknown samples provided by an external source. (NELAC) [2.1]

Performance Testing Program:
The aggregate of providing rigorously controlled and standardized environmental and radiobioassay samples to a laboratory for analysis, reporting of results, statistical evaluation of the results and the collective demographics and results summary of all participating laboratories. (NELAC)

Performance Test Sample (PT):
A sample, the composition of which is unknown to the analyst and is provided to test whether the analyst/laboratory can produce analytical results within specified acceptance criteria.

Quality Assurance:
An integrated system of activities involving planning, QC, quality assessment, reporting and quality improvement to ensure that a product or service meets defined standards of quality with a stated level of confidence.

Quality Assurance [Project] Plan:
A QAPP is a formal document describing the detailed QC procedures by which the quality requirements defined for the data and decisions pertaining to a specific project are to be achieved. (EPA-QAD)

Quality Control:
The overall system of technical activities which purpose is to measure and control the quality of a product or service so that it meets the needs of users.

Quality Control Sample:
An uncontaminated sample matrix spiked with known amounts of analytes from a source independent from the calibration standards. It is generally used to establish intra-laboratory or analyst specific precision and bias or to assess the performance of all or a portion of the measurement system. (EPA-QAD)

Quality Manual:
A document stating the management policies, objectives, principles, organizational structure and authority, responsibilities, accountability, and implementation of an agency, organization, or laboratory, to ensure the quality of its product and the utility of its product to its users. (NELAC)

Quality System:
A structured and documented management system describing the policies, objectives, principles, organizational authority, responsibilities, accountability, and implementation plan of an organization for ensuring quality in its work processes, products (items), and services. The quality system provides the framework for planning, implementing, and assessing work performed by the organization and for carrying out required QA and QC

Quantitation Limits:
The maximum or minimum levels, concentrations, or quantities of a target variable (e.g., target analyte) that can be quantified with the confidence level required by the data user. (NELAC)

Range:
The difference between the minimum and the maximum of a set of values. (EPA-QAD)

Reagent Blank (method reagent blank):
A sample consisting of reagent(s), without the target analyte or sample matrix, introduced into the analytical procedure at the appropriate point and carried through all subsequent steps to determine the contribution of the reagents and of the involved analytical steps.

Reference Material:
A material or substance one or more properties of which are sufficiently well established to be used for the calibration of an apparatus, the assessment of a measurement method, or for assigning values to materials. (ISO Guide 30-2.1)

Reference Standard:
A standard, generally of the highest metrological quality available at a given location, from which measurements made at that location are derived. (VIM-6.0-8)

Replicate Analyses:
The measurements of the variable of interest performed identically on two or more sub-samples of the same sample within a short time interval. (NELAC)

Report Limit (RL):
The laboratory nominal QL or the level of sensitivity required by the client but not lower than the LOD.

Requirement:
Denotes a mandatory specification; often designated by the term "shall". (NELAC)

Resource Conservation and Recovery Act (RCRA):
The enabling legislation under 42 USC 321 et seq. (1976), that gives EPA the authority to control hazardous waste from the "cradle-to-grave", including its generation, transportation, treatment, storage, and disposal. (NELAC)

Safe Drinking Water Act (SDWA):
The enabling legislation, 42 USC 300f et seq. (1974), (Public Law 93-523), that requires the EPA to protect the quality of drinking water in the U.S. by setting maximum allowable contaminant levels, monitoring, and enforcing violations. (NELAC)

Sample Duplicate:
Two samples taken from and representative of the same population and carried through all steps of the sampling and analytical procedures in an identical manner. Duplicate samples are used to assess variance of the total method including sampling and analysis. (EPA-QAD)

Second Order Polynomial Curve (Quadratic): The 2nd order curves are a mathematical calculation of a slightly curved line over two axis. The y axis represents the instrument response (or Response ratio) of a standard or sample and the x axis represents the concentration. The 2nd order regression will generate a coefficient of determination (COD or r^2) that is a measure of the "goodness of fit" of the quadratic curvature the data. A value of 1.00 indicates a perfect fit. In order to be used for quantitative purposes, r^2 must be greater than or equal to 0.99. Note: r^2 acceptance criteria for KPA lifetime decay is 0.96.

Selectivity:
(Analytical chemistry) the capability of a test method or instrument to respond to a target substance or constituent in the presence of non-target substances. (EPA-QAD)

Sensitivity:
The capability of a method or instrument to discriminate between measurement responses representing different levels (e.g., concentrations) of a variable of interest. (NELAC)

Spike:
A known mass of target analyte added to a blank, sample or sub-sample; used to determine recovery efficiency or for other QC purposes.

Standard:
The document describing the elements of laboratory accreditation that has been developed and established within the consensus principles of NELAC and meets the approval requirements of NELAC procedures and policies. (ASQC)

Standard Operating Procedure (SOP):

A written document which details the method of an operation, analysis, or action where the techniques and procedures are thoroughly prescribed and which is accepted as the method for performing certain routine or repetitive tasks.

Standardized Reference Material
A certified reference material produced by the U.S. National Institute of Standards and Technology or other equivalent organization and characterized for absolute content, independent of analytical method. (EPA-QAD)

Systems Audit (also Technical Systems Audit):
A thorough, systematic, qualitative on-site assessment of the facilities, equipment, personnel, training, procedures, record keeping, data validation, data management, and reporting aspects of a total measurement system. (EPA-QAD)
Traceability:
The property of a result of a measurement whereby it can be related to appropriate standards, generally international or national standards, through an unbroken chain of comparisons. (VIM-6.12)

Tracer:
Tracers are radioactive and/or massless. Where used, they are added to all samples in an analytical batch so that each sample has a specific measurable parameter (yield). Tracers are counted and the yield is used in the data calculations to correct for any and all sources of analytical losses.

Uncertainty:
A parameter associated with the result of a measurement that characterizes the dispersion of the value that could reasonably be attributed to the measured value. A measure of the total variability associated with a measurement that includes the two major error components: systematic error (bias) and random error (imprecision).

United States Environmental Protection Agency (EPA):
The Federal governmental agency with responsibility for protecting public health and safeguarding and improving the natural environment (i.e., the air, water, and land) upon which human life depends. (US-EPA)

Acronyms:

Acronym	Definition
APLAC	Asia-Pacific Laboratory Accreditation Cooperation
ASQC	American Society for Quality
ASTM	American Society for Testing & Materials
BS	Blank Spike
BSD	Blank Spike Duplicate
CAR	Corrective Action Report
CBI	Confidential Business Information
CCV	Continuing Calibration Verification
CERCLA	Comprehensive Environmental Response, Compensation, and Liability Act of 1980
CF	Calibration Factor
CFR	Code of Federal Regulations
CLP	Environmental Protection Agency Contract Laboratory Program
COC	Chain of Custody
COO	Chief Operating Officer
CQMP	Corporate Quality Management Plan
CRDL	Client Required Detection Limit
DL	Detection Limit
DOC	Demonstration of Capability

Acronym	Definition
DoD	Department of Defense
DoD ELAP	Department of Defense Environmental Laboratory Accreditation Program
DOELAP	Department of Energy Laboratory Accreditation Program
DQO	Data Quality Objectives
DUP	Duplicate
EA	European Cooperation for Accreditation
ECO	Ethics and Compliance Officer
EDD	Electronic Data Deliverable
EDL	Environmental Detection Limit
EH&S	Environment, Health and Safety
EHSC	Environment, Health and Safety Coordinator
EPA	Environmental Protection Agency
EPA - OSWER	EPA Office of Solid Waste and Emergency Response
EPA - QAD	EPA Quality Assurance Division
ERPIMS	Environmental Restoration Information Management System (US Air Force)
FWHM	Full-Width-Half-Maximum
HPS	Health Physics Society
HR	Human Resources
ICOC	Internal Chain of Custody
ICP	Inductively Coupled Plasma Atomic Emission Spectroscopy
ICV	Initial Calibration Verification
IDB	Instrument Database
IDL	Instrument Detection Limit
IDOC	Initial Demonstration of Capability
IH	Industrial Hygiene
IS	Internal Standard
ISO	International Organization for Standardization
LCS	Laboratory Control Sample
LCSD	Laboratory Control Sample Duplicate
LIMS	Laboratory Information Management System
LOD	Limit of Detection
LOQ	Limit of Quantitation
MDC	Minimum Detectable Concentration
MDL	Method Detection Limit
MDLV	Method Detection Limit Verification standard
MS	Matrix Spike
MSD	Matrix Spike Duplicate
MSDS	Material Safety Data Sheet
NCM	Nonconformance Memo
NELAC	National Environmental Laboratory Accreditation Conference
NELAP	National Environmental Laboratory Accreditation Program
NFESC	Navy Facilities Engineering Service Center

Acronym	Definition
NVLAP	National Voluntary Laboratory Accreditation Program (National Institute of Standards and
NYCRR	New York [State} Codes, Rules and Regulations
PARCCSS	Laboratory QC objectives: precision, accuracy, representativeness, comparability,
PBMS	Performance Based Measurement System
PCM	Phase Contrast Microscopy
PLM	Polarized Light Microscopy
PM	Project Manager
PT	Performance Testing
QA	Quality Assurance
QAM	Quality Assurance Manual
QAMS	Quality Assurance Management System
QAPP	Quality Assurance Project Plan
QC	Quality Control
QL	Quantitation Limit
QRI	Quality-Related Items or Services
QSM	Quality Systems Manual (US Department of Defense), usually DoD QSM
RCRA	Resource Conservation and Recovery Act of 1976
RDL	Required Detection Limit
RER	Relative Error Ratio
RF	Response Factor
RFP	Request for Proposal
RL	Reporting Limit
ROI	Region of Interest
RPD	Relative Percent Difference
RSD	Relative Standard Deviation
RSO	Radiation Safety Officer
SAP	Sampling and Analysis Plan
SDG	Sample Delivery Group
SDWA	Safe Drinking Water Act of 1974
SOP	Standard Operating Procedure
SRM	Standardized Reference Material
TAT	Turn-Around-Time
TCLP	Toxicity Characteristic Leaching Procedure (EPA)

Company Confidential & Proprietary

Appendix 3: Laboratory Certifications, Accreditations, Validations

TestAmerica Richland laboratory maintains certifications, accreditations, certifications, and validations with numerous state and national entities. Programs vary but may include on-site audits, reciprocal agreements with another entity, performance testing evaluations, review of the QA Manual, SOPs, MDLs, training records, etc. At the time of this QA Manual revision, the laboratory has accreditation/certification/licensing with the following organizations:

Authority	Lab ID or Cert #
AIHA	**187436**
Arizona	**AZ0709**
California	**2425**
Colorado	**N/A**
Florida	**E87829**
Hawaii	**N/A**
Nevada	**WA23**
Oregon	**WA100002**
Tennessee	**4011**
Utah	**QUAN8**
Virginia	**100**
Washington	**C1245**
USDA	**S-74214**

The certificates and parameter lists (which may differ) for each organization may be found on the corporate web site, the laboratory's public server, the final report review table, and in the following offices: QA, marketing, and project management. Copies of these certifications and accreditations are also maintained in a separate cover as an addendum to this QAM.

Appendix 4 - Correlation of TestAmerica Quality Program with USDOE QSAS

USDOE Quality Systems for Analytical Services	TestAmerica Quality Program
4.1 DOE-1	QAM 4.2.3
4.2 DOE-1	QAM 6.2
4.2 DOE-2	QAM 20.4.1.1, Appendix 3.1
4.2 DOE-3	QAM 21.3
4.3 DOE-1	QAM 6.3
4.5 DOE-1	QAM 8.1
4.6 DOE-1	QAM 9.3.1
4.6 DOE-2	QAM 9.6
4.8 DOE-1	QAM 11.3
4.10 DOE-1	QAM 12.1, 12.3 & 5.5.1
4.11 DOE-1	QAM 13.1
4.12 DOE-1	QAM 14.2.2, 23.1.2, 23.4, 23.3
4.12 DOE-2	QAM 14.1.4
4.12 DOE-3	QAM 12.5
4.12 DOE-4	QAM 14.2.2e
4.12 DOE-5	QAM 14.5.6.5
4.12 DOE-6	QAM 19.8.3
4.12 DOE-7	QAM 14.5.4
4.13 DOE-1	QAM 15.1
4.13 DOE-2	QAM 15.3
4.14 DOE-1	QAM 16.2
4.14 DOE-2	QAM 15.1.5
4.14 DOE-3	QAM 16.2
5.2 DOE-1	QAM 17.3
5.2 DOE-2	QAM TABLE 12-1
5.2 DOE-3	QAM 5.3
5.3 DOE-1	QAM 15.1.6
5.3 DOE-2	QAM 15.1.6
5.4 DOE-1	QAM 5.3
5.4 DOE-2	QAM 5.3, 6.2
5.4 DOE-3	QAM 6.3

USDOE Quality Systems for Analytical Services	TestAmerica Quality Program
5.4 DOE-4	QAM 19.8.1 & SOP RL-IT-001
5.5 DOE-1	QAM 20.3.5
5.5 DOE-2	QAM 20.3.3
5.5 DOE-3	QAM 20.3, 21.3
5.5 DOE-4	QAM 20.3, 9.3.3 & SOPs RL-SE-004, RL-SE-005
5.5 DOE-5	QAM 20.3.4
5.5 DOE-6	SOP RL-ALP-010
5.5 DOE-7	N/A
5.5 DOE-8	N/A
5.5 DOE-9	IDB User Guide
5.5 DOE-10	QAM 9.4
5.6 DOE-1	QAM 9.3.3, 9.3.4, 21.4.1
5.6 DOE-2	QAM 9.3.3
5.8 DOE-1	QAM 17.1
5.8 DOE-2	QAM 23.1.1.1, 20.3.3
5.8 DOE-3	QAM 22.2.1
5.8 DOE-4	QAM 23.1.1.1
5.8 DOE-5	QAM 23.1
5.8 DOE-6	QAM 23.2.2
5.8 DOE-7	SOPs RL-SRV-001, RL-RS-004
5.8 DOE-8	N/A
5.8 DOE-9	QAM 23.3
5.9 DOE-1	QAM 15.1.5
5.9 DOE-2	QAM Section 24
5.9 DOE-3	N/A
5.10 DOE-1	QAM 25.4.2
6.2.1	Radiation Safety Program “General Duties”
6.2.2	Radioactive Materials License
6.2.3	Radiation Safety Program “Foreword”
6.2.4	Radiation Safety Program “RSO Duties”, “Radioactive Emergencies and Spills”
6.2.5	Radiation Safety Program “Radioisotope Inventory”
6.2.6	SOP RL-HS-001

USDOE Quality Systems for Analytical Services	TestAmerica Quality Program
6.3.1	N/A
6.3.2	N/A
6.3.3	N/A
6.4.1	CW-E-M-001 1.2
6.4.2	CW-E-M-001 Section 12
6.4.3	CW-E-M-001 5.7.2
6.4.4	SOP RL-HS-005
6.4.5	Laboratory Contingency Plan “Site Evacuation”
6.5.1	SOP RICH-HS-0007
6.5.2	SOPs RL-HS-001, RL-HS-005, RL-HS-006
6.5.3	SOPs RL-HS-005, RL-HS-002, RL-HS-001, RL-COC-002, RL-HS-006 & Radiation Safety Program “Radioactive Waste Handling”, & CW-E-M-0001 Section 13
C.1 DOE-1	QAM 19.4.2
C.3 DOE-1	N/A
C.3 DOE-2	QAM 19.6.1.3
C.3 DOE-3	QAM 19.6.1.1
D.1 DOE-2	QAM 24.3.1.4
D.1 DOE-3	QAS
D.1 DOE-4	N/A
D.1 DOE-5	QAS
D.1 DOE-6	SOP CA-Q-S-006
D.1 DOE-7	SOP CA-Q-S-006
D.1 DOE-8	SOP CA-Q-S-006
D.1 DOE-9	QAM 296.1.3
D.1 DOE-10	QAM 20.1.1.1
D.1 DOE-11	SOPs RL-KPA-001, RL-SE-007, RL-KPA-003 & QAS
D.4 DOE-2	QAM 24.1
D.4 DOE-3	QAS
D.4 DOE-4	QAS
D.4 DOE-5	QAM 24.3.1.1
D.4 DOE-6	QAM 24.1
D.4 DOE-7	QAM 24.4.1.1, QAS

USDOE Quality Systems for Analytical Services	TestAmerica Quality Program
D.4 DOE-8	QAM 24.5.1
D.4 DOE-9	QAS
D.4 DOE-10	QAS
D.4 DOE-11	QAS
D.4 DOE-12	QAS
D.4 DOE-13	Analytical SOPs
D.4 DOE-14	QAS
D.4 DOE-15	QAS
D.4 DOE-16	QAM 20.4.1, 20.4.3 & SOP RL-CI-002
D.4 DOE-17	SOP RL-CI-007
D.4 DOE-18	SOP RL-CI-008
D.4 DOE-19	SOP RL-RA-001
D.4 DOE-20	QAS
D.4 DOE-21	SOP RL-CI-007
D.4 DOE-22	SOP RL-CI-008
D.4 DOE-23	SOP RL-CI-006
D.4 DOE-24	SOP RL-CI-005
D.4 DOE-25	RadCalc Validation and User Guides. QAS
D.4 DOE-26	SOP RL-DR-001
D.4 DOE-27	RadCalc Validation and User Guides. QAS
D.4 DOE-28	QAM 21.3
D.4 DOE-29	QAM 21.3
D.4 DOE-30	Analytical SOPs
D.4 DOE-31	QAM 18.3, 23.3
D.4 DOE-32	QAM 20.4.4, QAS

Appendix 5 - LIST OF LABORATORY STANDARD OPERATING PROCEDURES FOR PERFORMANCE OF ANALYSES PER DoD ELAP

TOPIC	SOP ID	TITLE
Alpha Spectrometry	RL-ALP-001	Actinides By Extraction Chromatography
Alpha Spectrometry	RL-ALP-002	Isotopic Plutonium
Alpha Spectrometry	RL-ALP-003	Americium, Curium and Uranium By Extraction Chromatography
Alpha Spectrometry	RL-ALP-004	Isotopic Uranium By Extraction Chromatography
Alpha Spectrometry	RL-ALP-005	Isotopic Thorium In Environmental Matrices
Alpha Spectrometry	RL-ALP-006	Neptunium By Extraction Chromatography
Alpha Spectrometry	RL-ALP-007	Polonium-210 In Urine
Alpha Spectrometry	RL-ALP-008	Isotopic Thorium In Urine and Fecal Samples
Alpha Spectrometry	RL-ALP-009	Isotopic Uranium
Alpha Spectrometry	RL-ALP-010	Plutonium and Americium
Alpha Spectrometry	RL-ALP-011	Lead-210 By Extraction Chromatography
Alpha Spectrometry	RL-ALP-012	Isotopic Uranium and Polonium-210 In Water, Soil and Filters
Alpha Spectrometry	RL-ALP-013	Neptunium-237 By Liquid-Liquid Extraction
Alpha Spectrometry	RL-ALP-014	Anhydrous Ether Extraction
Alpha Spectrometry	RL-ALP-015	Electrodeposition of Actinides
Alpha Spectrometry	RL-ALP-016	Micro-Coprecipitation of Actinides On Neodymium Fluoride
Alpha Spectrometry	RL-ALP-017	Ion-Exchange Preparation
Alpha Spectrometry	RL-ALP-018	Separation of Alpha Emitting Radium Isotopes
Asbestos	RL-ASB-001	Fiber Counting By Phase Contrast Microscopy Based On NIOSH Method 7400
Asbestos	RL-ASB-002	Sample Preparation and Analysis For Asbestos (Bulk) By Polarized Light Microscopy Based On NIOSH Method 9002
Calibration	RL-CI-001	Determination of Proportional Counters Efficiency
Calibration	RL-CI-002	Calibration of The Alpha Spectrometry Detectors

TOPIC	SOP ID	TITLE
Calibration	RL-CI-003	Calibration of Liquid Scintillation Counters
Calibration	RL-CI-004	Efficiency Calibration of Germanium Spectroscopy Detectors
Calibration	RL-CI-005	Use of Liquid Scintillation Counters
Calibration	RL-CI-006	Use of Quad Alpha and Quad Beta Counters
Calibration	RL-CI-007	Use of Gamma Detectors
Calibration	RL-CI-008	Use of Alpha Spectrometers
Calibration	RL-CI-009	Determining Gas Flow Proportional Counters Plateaus
Sample Handling	RL-COC-001	Internal Chain of Custody
Sample Handling	RL-COC-002	Internal Sample Tracking
Data Review	RL-DR-001	Review of Environmental and Bioassay Data
Data Review	RL-DR-002	Logbook Maintenance and Review
Data Review	RL-DR-003	Review and Analysis of Alpha Spectrometry Spectra
Gamma Spectrometry	RL-GAM-001	Preparation of All Matrices For Gamma Spectroscopy
Gamma Spectrometry	RL-GAM-002	Iodine-131 and 129 In Water By Solvent Extraction Method
Gas Flow Proportional Counting	RL-GPC-001	Gross Alpha and Gross Beta In Water By Method 9310 and EPA Method 900.0
Gas Flow Proportional Counting	RL-GPC-002	Gross Alpha Activity In Water By Coprecipitation
Gas Flow Proportional Counting	RL-GPC-003	Strontium In Environmental Matrices
Gas Flow Proportional Counting	RL-GPC-004	Yttrium-90 Separation For Strontium-90 Determination
Gas Flow Proportional Counting	RL-GPC-005	Total Strontium In Urine
Gas Flow Proportional Counting	RL-GPC-006	Strontium In Feces
Gas Flow Proportional Counting	RL-GPC-007	Gross Alpha and Gross Beta In Soil, Food and Vegetation
Gas Flow Proportional Counting	RL-GPC-008	Preparation of Air Filters For Gross Alpha/Beta and Compositing Air Filters

TOPIC	SOP ID	TITLE
Gas Flow Proportional Counting	RL-GPC-009	Gross Beta In Urine
Gas Flow Proportional Counting	RL-GPC-010	Separation of Strontium-90
Gas Flow Proportional Counting	RL-GPC-011	Determination of Lead-210 by Extraction Chromatography
Environment Health and Safety	RL-HS-001	Accumulation and Collection of All Waste Generated
Environment Health and Safety	RL-HS-002	Sampling, Analysis and Designation of A Waste Container
Environment Health and Safety	RL-HS-003	Disposal of Radioactive Standards
Environment Health and Safety	RL-HS-004	Waste Shipping and Manifesting
Environment Health and Safety	RL-HS-005	Hazardous Waste Management Plan
Environment Health and Safety	RL-HS-006	Disposal/Return of Completed Samples
Environment Health and Safety	RL-HS-007	Quarantine Soils Procedure
Information Technology	RL-IT-001	Software Quality Assurance
Kinetic Phosphorescence Analysis	RL-KPA-001	Environmental Sample Preparation For Total Uranium By KPA
Kinetic Phosphorescence Analysis	RL-KPA-002	Separation of Total Uranium In Water and Urine
Kinetic Phosphorescence Analysis	RL-KPA-003	Determination of Total Uranium By KPA
Liquid Scintillation	RL-LSC-001	Tritium, Carbon-14, Nickel-63 Or Phosphorus-32 Analysis In Urine
Liquid Scintillation	RL-LSC-002	Tritium By Cryogenic Distillation
Liquid Scintillation	RL-LSC-003	Tritium In Urine By Distillation
Liquid Scintillation	RL-LSC-004	Tritium In Air
Liquid Scintillation	RL-LSC-005	Tritium In Water and Wine
Liquid Scintillation	RL-LSC-006	Tritium In Milk Samples
Liquid Scintillation	RL-LSC-007	Low Level Tritium In Water, Milk And/Or Wine By Electrolytic Enrichment
Liquid Scintillation	RL-LSC-008	Carbon-14 By Digestion Method
Liquid Scintillation	RL-LSC-009	Carbon-14 By Benzene Synthesis

TOPIC	SOP ID	TITLE
Liquid Scintillation	RL-LSC-010	Carbon-14 In Graphite and Soil
Liquid Scintillation	RL-LSC-011	Carbon-14 In Water By Direct Counting
Liquid Scintillation	RL-LSC-012	Selenium-79
Liquid Scintillation	RL-LSC-013	Technetium-99 In All Matrices
Liquid Scintillation	RL-LSC-014	Technetium-99 By Extraction Chromatography
Liquid Scintillation	RL-LSC-015	Iron and Nickel By Extraction Chromatography
Liquid Scintillation	RL-LSC-016	Iron-55 and Iron-59 In Water
Liquid Scintillation	RL-LSC-017	Ni-59 and Ni-63 By Extraction Chromatography
Liquid Scintillation	RL-LSC-018	Nickel-63 On ECD Smears
Liquid Scintillation	RL-LSC-019	Radon-222 – Adapted From Methods 913.0 and Sm7500-Rn
Metals	RL-MT-001	Inductively Coupled Plasma-Atomic Emission Spectroscopy, Based On Method 6010B
Metals	RL-MT-002	Acid Digestion For ICP Analysis Based On SW846 3050B
Metals	RL-MT-003	Digestion Preparation Based On Method NIOSH 7300
Metals	RL-MT-004	Inductively Coupled Plasma / Mass Spectrometry for Trace Analysis Based On EPA Method 200.8 and EPA Method 6020
Project Management	RL-PM-001	Preparation of Report Forms and Electronic Data Deliverables
Project Management	RL-PM-002	Project Management Guidelines
Sample Preparation	RL-PRP-001	Preparation of Urine and Blood Samples
Sample Preparation	RL-PRP-002	Preparation of Fecal Samples Using Hydrofluoric Acid Digestion
Sample Preparation	RL-PRP-003	Preparation of Soil Samples
Sample Preparation	RL-PRP-004	Preparation of Environmental Matrices
Sample Preparation	RL-PRP-005	Preparation and Dissolution of Soil By Microwave Bomb Digestion
Sample Preparation	RL-PRP-006	Complete Dissolution By Mixed Acids In A Teflon Beaker
Sample Preparation	RL-PRP-007	Preparation of Mixed Bed Resins and Pre-Filters
Sample Preparation	RL-PRP-008	Preparation of Soil, Vegetation and Air Filters By Mixed Strong Acid Leaching
Sample Preparation	RL-PRP-009	Preparation of Soil For Gamma Spectroscopy and Other Radiochemical Analyses By Acid Digestion
Sample Preparation	RL-PRP-010	Urine and Water Sample Preparation By Calcium Phosphate Precipitation

TOPIC	SOP ID	TITLE
Sample Preparation	RL-PRP-011	Preparation of Bone and Tissue Samples
Quality Assurance	RL-QA-001	Review of Quality Control Data
Quality Assurance	RL-QA-002	Nonconformance and Corrective Action System
Quality Assurance	RL-QA-003	Evaluation and Review of The Reagent Blank File
Quality Assurance	RL-QA-004	Lead Auditor Training and Certification
Alpha Scintillation	RL-RA-001	Radium-226 and Radium-228 – Adapted From EPA 903.1 and 904.0
Alpha Scintillation	RL-RA-002	Determination of Total Alpha Radium
Reagent Preparation	RL-RPL-001	Reagent and Non-Radioactive Standard Labeling
Reagent Preparation	RL-RPL-002	Preparation of Synthetic Urine and Feces Using Recipes From HPS N13.30 for Performance Testing
Reagent Preparation	RL-RPL-003	Preparation of Synthetic Urine and Feces
Radiation Safety	RL-RS-0001	Guidelines For Radiation and Contamination Surveys
Radiation Safety	RL-RS-002	Checking The Portable Survey Meters
Radiation Safety	RL-RS-003	Radiological Classification of Screened Samples
Radiation Safety	RL-RS-004	Radiological Screening of Samples
Systems and Equipment	RL-SE-001	Pipet Calibration Check
Systems and Equipment	RL-SE-002	Annual Calibration of Thermometers
Systems and Equipment	RL-SE-003	Balance Calibration Verification
Systems and Equipment	RL-SE-004	Water Quality Monitoring
Systems and Equipment	RL-SE-005	Cartridge Replacement and Conductivity Testing For The Reagent Water Systems
Systems and Equipment	RL-SE-006	Preventive Maintenance and Use of Balances
Systems and Equipment	RL-SE-007	Decontamination of Labware and Equipment
Systems and Equipment	RL-SE-008	Instructions For The Eichrom Vacuum Box System
Sample Handling	RL-SRV-001	Receiving and Login of Samples By Sample Control
Sample Handling	RL-SRV-002	Temperature Monitoring of Sample Refrigerators
Sample Handling	RL-SRV-003	Preparation of Samples For Shipping
Standards Preparation	RL-STD-001	Quality Control Vial Preparation

TOPIC	SOP ID	TITLE
Standards Preparation	RL-STD-002	Radioactive Standard Processing
Standards Preparation	RL-STD-003	Preparation and Standardization of Barium Carriers
Standards Preparation	RL-STD-004	Preparation and Standardization of Iodine Carriers
Standards Preparation	RL-STD-005	Preparation and Standardization of Strontium Carriers
Standards Preparation	RL-STD-006	Preparation and Standardization of Yttrium Carriers
Standards Preparation	RL-STD-007	Preparation of Alpha And/Or Beta Air Filter Calibration Standards
Standards Preparation	RL-STD-008	Preparation of Gamma Detector Calibration Standards
Standards Preparation	RL-STD-009	Preparation of Calibration Standards For Alpha And/Or Beta Gas Proportional Counters
Standards Preparation	RL-STD-010	Preparation of Alpha And/Or Beta Water Residue Calibration Standards
Standards Preparation	RL-STD-011	Preparation and Standardization of Lead Carrier
Standards Preparation	RL-STD-012	Preparation and Standardization of Thorium-234 Yield Monitor

Company Confidential & Proprietary

END OF DOCUMENT

Title: Digestion Preparation based on Method NIOSH 7300

Approvals (Signature/Date):

Steve Wheland Technical Manager	12/06/2011 Date	Dave Harbinson Health & Safety Coordinator	12/6/2011 Date
Sarah Nagel Quality Assurance Manager	12/06/2011 Date	Jodie Carnes Laboratory Director	12/6/11 Date

Copyright Information:
This documentation has been prepared by TestAmerica Laboratories, Inc. and its affiliates ("TestAmerica"), solely for their own use and the use of their customers in evaluating their qualifications and capabilities in connection with a particular project. The user of this document agrees by its acceptance to return it to TestAmerica upon request and not to reproduce, copy, lend, or otherwise disclose its contents, directly or indirectly, and not to use it for any other purpose other than that for which it was specifically provided. The user also agrees that where consultants or other outside parties are involved in the evaluation process, access to these documents shall not be given to said parties unless those parties also specifically agree to these conditions.

THIS DOCUMENT CONTAINS VALUABLE CONFIDENTIAL AND PROPRIETARY INFORMATION. DISCLOSURE, USE OR REPRODUCTION OF THESE MATERIALS WITHOUT THE WRITTEN AUTHORIZATION OF TESTAMERICA IS STRICTLY PROHIBITED. THIS UNPUBLISHED WORK BY TESTAMERICA IS PROTECTED BY STATE AND FEDERAL LAW OF THE UNITED STATES. IF PUBLICATION OF THIS WORK SHOULD OCCUR THE FOLLOWING NOTICE SHALL APPLY:

©COPYRIGHT 2011 TESTAMERICA LABORATORIES, INC. ALL RIGHTS RESERVED.

RL-MT-003 REVISION 3

Facility Distribution No. _____ Distributed To: _____

1. SCOPE AND APPLICATION

1.1 This procedure describes the preparation of solid samples for analysis of certain metals by Inductively Coupled Plasma Atomic Emission Spectrometry (ICP-AES) as specified in NIOSH Method 7300.

1.2 Samples prepared by the protocols detailed in this SOP may be analyzed by ICP. Additional elements may be analyzed following digestion provided that the method performance criteria in Section 13.0 of this SOP are met.

1.3 This SOP provides procedures applicable to the preparation of total metals in filters, wipes, bulk/soil, and smears.

1.4 The volumes and directions in this procedure are for use in either beakers or block digesters

2. SUMMARY OF METHOD

2.1 A representative sample is digested in nitric and perchloric acid. The digested samples are then brought up to appropriate volumes for analysis by ICP.

3. DEFINITIONS

Additional definitions of terms in this SOP may be found in the glossary of the Quality Assurance Manual.

3.1 Total Metals: The concentration determined on an unfiltered sample following digestion.

4. INTERFERENCES

4.1 There are numerous routes by which samples may become contaminated. Potential sources of trace metal contamination include: metallic or metal-containing labware (e.g. talc gloves which contain high levels of zinc), containers, impure reagents, dirty glassware, improper sample transfers, dirty work areas, atmospheric inputs such as dust and dirt, etc. Be aware of potential sources of contamination and take appropriate measures to minimize or avoid them.

4.2 The entire work area, including the bench top and fume hood, should be thoroughly cleaned on a routine schedule in order to minimize the potential for environmental contamination.

4.3 Boron and silica from glassware will leach into the sample solution during and following sample processing. For critical low level determinations of boron and silica, only quartz and/or plastic lab ware should be used.

4.4 Physical interference effects may contribute to inaccuracies in the determinations of trace elements. Oils, solvents and other matrices may not be digested using these methods if they are not soluble with acids. If physical interferences are present, they should be documented.

4.5 Visual interferences or anomalies (such as foaming, emulsions, precipitates, etc.) must be documented.

4.6. Allowing samples to boil or go dry during digestion may result in the loss of volatile metals. If this occurs the sample must be reprepared. Antimony is easily lost by volatilization from hydrochloric media.

4.7. Specific analytical interferences are discussed in each of the determinative methods.

5. SAFETY

Employees must abide by the policies and procedures in the Corporate Environmental Health and Safety Manual (CW-E-M-001), Radiation Safety Manual and this document. This procedure may involve hazardous material, operations and equipment. This SOP does not purport to address all of the safety problems associated with its use. It is the responsibility of the user of the method to follow appropriate safety, waste disposal and health practices under the assumption that all samples and reagents are potentially hazardous. Safety glasses, gloves, lab coats and closed-toe, nonabsorbent shoes are a minimum.

5.1 SPECIFIC SAFETY CONCERNS OR REQUIREMENTS

Eye protection that satisfies ANSI Z87.1, laboratory coat, and appropriate gloves must be worn while samples, standards, solvents and reagents are being handled. Disposable gloves that have become contaminated will be removed and discarded; other gloves will be cleaned immediately.

All work must be stopped in the event of a known or potential compromise to the health and safety of an associate. The situation must be reported immediately to a laboratory supervisor.

Exposure to chemicals must be maintained as low as reasonably achievable; therefore, unless they are known to be non-hazardous, all samples should be opened, transferred and prepared in a fume hood, or under other means of mechanical ventilation.

The acidification of samples containing reactive materials may result in the release of toxic gases, such as cyanides or sulfides. Acidification of samples should be done in a fume hood. The analyst should also be aware of the potential for a vigorous reaction.

NOTE: When preparing diluted acids always add acid to water. If the water is added to the acid a violent reaction may occur.

5.1.2 PRIMARY MATERIALS USED

The following is a list of the materials used in this method, which have a serious or significant hazard rating. NOTE: This list does not include all materials used in the method. The table contains a summary of the primary hazards listed in the MSDS for each of the materials listed in the table. A complete list of materials used in the method can be found in the reagents and materials section. Employees must review the information in the MSDS for each material before using it for the first time or when there are major changes to the MSDS.

Material (1)	Hazards	Exposure Limit (2)	Signs and symptoms of exposure
Perchloric Acid	Corrosive Oxidizer Poison	None	Unstable at ordinary temperature and pressure and can undergo explosive decomposition, especially at elevated temperatures or if allowed to dehydrate. Inhalation of vapors or mists will cause irritation with coughing, choking, and inflammation of the nose, throat, and upper respiratory tract. Highly corrosive to tissue. Can cause severe burns with discoloration and pain. Permanent visual damage may occur.

Material (1)	Hazards	Exposure Limit (2)	Signs and symptoms of exposure
Nitric Acid	Corrosive Oxidizer Poison	2 ppm-TWA 4 ppm-STEL	Nitric acid is extremely hazardous; it is corrosive, reactive, an oxidizer, and a poison. Inhalation of vapors can cause breathing difficulties and lead to pneumonia and pulmonary edema, which may be fatal. Other symptoms may include coughing, choking, and irritation of the nose, throat, and respiratory tract. Can cause redness, pain, and severe skin burns. Concentrated solutions cause deep ulcers and stain skin a yellow or yellow-brown color. Vapors are irritating and may cause damage to the eyes. Contact may cause severe burns and permanent eye damage.
1 – Always add acid to water to prevent violent reactions.			
2 – Exposure limit refers to the OSHA regulatory exposure limit.			

6. EQUIPMENT AND SUPPLIES

6.1. Hot plate or other heating source capable of maintaining a temperature of 120-150°C, including a block digestion apparatus.

6.2. Disposable Calibrated Digestion Tubes and or beakers.

6.3. Thermometer that covers a temperature range of 0-200°C.

6.4. Appropriate digestion vessel.

6.5. Watch glasses, ribbed or equivalent.

6.6. Whatman No. 41 filter paper or equivalent.

6.10. Analytical balance capable of accurately weighing to the nearest 0.01 grams.

6.11. Pipets - various

6.12. Repipetors or suitable reagent dispensers.

6.13. 50-mL polypropylene centrifuge tubes

7. REAGENTS AND STANDARDS

7.1. Reagents are prepared from analytical reagent grade chemicals unless otherwise specified below. Reagent water, which must have an electrical resistivity of 1 megohm-cm or greater when obtained, is used throughout. Reagent water is obtained from the Nano-pure system. Label all reagents as outlined in procedure RL-RPL-001.

NOTE: Consult the Material Safety Data Sheets for the properties of these reagents and how to work with them.

7.2. Laboratory Control Sample (LCS) and Matrix Spike (MS) solutions are purchased as custom solutions. All standards must be stored in FEP fluorocarbon or previously unused polyethylene or polypropylene bottles. Stock standard solutions must be replaced prior to the expiration date provided by the manufacturer. If no expiration date is provided, the stock solutions may be used for up to one year and must be replaced sooner if verification from an independent source indicates a problem.

7.3. Working ICP LCS/MS spike solution: The ICP LCS/MS working spike solution is provided directly by the vendor, no further standard preparation is necessary.

7.4. The LCS and MS samples must contain all the elements designated for analysis in each batch of samples. If a non-routine element is required that is not contained in the custom solution, a solution must be purchased that will cover the additional analyte(s) of interest and provide for a final spike concentration that is appropriate to the determinative method.

7.5. Nitric acid (HNO_3), concentrated, trace metal grade or better.

7.6 Perchloric acid ($HClO_4$), concentrated, trace metal grade or better.

7.7 Ashing acid: 4:1 (v/v) HNO_3: $HClO_4$. Mix 4 volumes of conc. HNO_3 with 1 volume $HClO_4$ and mix thoroughly.

7.8 Dilution acid: 4% HNO_3, 1% $HClO_4$. Add 50 mL ashing acid to 600 mL reagent water. Dilute to 1 L with reagent water.

8. SAMPLE COLLECTION, PRESERVATION, SHIPMENT AND STORAGE

8.1. Sample holding time for metals included under the scope of this SOP is 180 days from the date of collection to the date of analysis.

8.2. Soil samples do not require preservation but must be stored at 4°C ± 2°C until the time of analysis.

9. QUALITY CONTROL

9.1. Method Detection Limit (MDL) - An MDL must be determined for each analyte/matrix prior to the analysis of any samples (per SOP CA-S-Q-003). The MDL may be determined using seven matrix specific replicates, spiked with all the analytes of interest, which have been carried through the entire analytical procedure. MDLs must be redetermined on an annual basis in accordance with 40 CFR Part 136 Appendix B requirements. The spike level must recover between the calculated MDL and 10X the MDL to be valid. The result of the MDL determination must be below the reporting limit.

9.2. Initial Demonstration Study- This requires the analysis of four QC check samples. The QC check sample is a well characterized laboratory generated sample used to monitor method performance, which should contain all the analytes of interest. The results of the initial demonstration study must be acceptable before analysis of samples may begin. The results of the initial demonstration study may be used to extend a method for the analysis of other elements provided all acceptance criteria are met.

9.2.1. Four aliquots of the check sample (LCS) are prepared and analyzed using the procedures detailed in this SOP and the determinative SOP.

9.2.2. Calculations and acceptance criteria for QC check samples are given in the determinative SOP (RL-MT-001).

9.3. Preparation Batch - A group of up to 20 samples that are of the same matrix and are processed together using the same procedures and reagents. The preparation batch must contain a method blank, a LCS, a matrix spike, and a matrix spike duplicate. In some cases, at client request, it may be appropriate to process a matrix spike and sample duplicate in place of the MS/MSD. If clients specify specific samples for MS/MSD, the batch may contain multiple MS/MSD pairs.

9.4. Sample Count - Laboratory generated QC samples (method blanks, LCS) are not included in the sample count for determining the size of a preparation batch. MS/MSDs are not included in the sample count unless there are multiple sets of MS/MSD per batch. The first MS/MSDs are not counted; all additional MS and MSDs are counted as samples.

9.5. Method Blank (MB) - One method blank must be processed with each preparation batch. The method blank consists of a matrix similar to samples analyzed containing all reagents specific to the method that is carried through the entire analytical procedure, including preparation and analysis. The method blank is used to identify any system and process interferences or contamination of the analytical system that may lead to the reporting of elevated analyte concentrations or false positive data. Criteria for the acceptance of blanks are contained within the individual analytical method SOPs. If the method blank does not meet the criteria contained within the analytical method SOPs, the blank and all associated samples in the batch must be redigested.

9.5.1. Soil/bulk method blanks are prepared by taking 0.5 mL or 0.5 g of reagent water or one filter through the procedure described in Section 11.1. Soil analyzed for IH accreditation must use soil/sand for method blanks.

9.6. Laboratory Control Sample (LCS) - One LCS of similar matrix to samples analyzed must be processed with each preparation batch. The LCS must contain all analytes of interest and must be carried through the entire analytical procedure. The LCS is used to monitor the accuracy of the analytical process. On-going monitoring of the LCS results provides evidence that the laboratory is performing the method within acceptable accuracy and precision guidelines. Criteria for the acceptance of LCS results are contained within the individual analytical method SOPs. Corrective action when LCS results fail to meet control limits will be repreparation and reanalysis of the batch. Refer to Section 7.3 for instructions on preparation of the aqueous LCS.

9.6.1. The LCS is prepared by spiking a matrix similar to samples with 0.5 mL of the working LCS/MS spike solution (7.3). The LCS is then processed as client samples.

9.7. Matrix Spike/Matrix Spike Duplicate (MS/MSD) - One MS/MSD pair must be processed for each preparation batch. A matrix spike (MS) is a field sample to which known concentrations of target analytes have been added. A matrix spike duplicate (MSD) is a second aliquot of the same sample (spiked identically as the MS) prepared and analyzed along with the sample and matrix spike. Some client specific data quality objectives (DQOs) may require the use of sample or LCS duplicates in place of or in addition to MS/MSDs. The MS/MSD results are used to determine the effect of a matrix on the precision and accuracy of the analytical process. Samples identified as field blanks cannot be used for MS/MSD analysis. If any analyte recovery or RPD falls outside the acceptance range, the recovery of that analyte must be in control for the LCS. If the recovery of the LCS is outside limits, corrective action must be taken. Corrective action will include repreparation and reanalysis of the batch. Corrective action when MS results fail to meet control limits does not include repreparation of samples unless the results indicate that a spiking error may have occurred. Refer to Sections 7.3 and 7.4 for instructions on preparation of the working matrix spike solutions.

Company Confidential & Proprietary

9.7.1. The MS/MSD sample is prepared by spiking an aliquot of a sample with 0.5 mL of the working LCS/MS spike solution. The matrix spike sample is then processed as described in Section 11.1.

If a MS/MSD cannot be prepared due to insufficient sample quantities then a LSCD must be performed.

9.8. Quality Assurance Summaries - Certain clients may require specific project or program QC which may supersede the SOP requirements.

10. CALIBRATION AND STANDARDIZATION

10.1. Hot plate temperatures must be verified daily (120-150°) for each heating device used and must be recorded on either the metals preparation log or in a temperature logbook. The temperature should be verified by measuring the temperature of a beaker of reagent water placed on each hot plate or in a water-filled digestion vessel, as appropriate. Check different locations on the heating device.

11. PROCEDURE

NOTE: If any parameter is found to be out of limits, consult supervision. Also, a nonconformance will be issued to the Quality Assurance Group.

NOTE: One time procedural variations are allowed if deemed necessary by the professional judgment of supervision to accommodate variation in sample matrix, radioactivity, chemistry, sample size, or other parameters. Any variation in procedure shall require approval by supervision and immediate notification of the Quality Assurance Group. If contractually required, the client shall be notified prior to any procedure changes. A Nonconformance Memo shall be completed and forwarded to the Quality Assurance Group within one day of the supervisor's approval. The Nonconformance Memo will be filed in the project file.
NOTE: To resolve problems with instrumentation or support equipment when the solution is not contained in this SOP, refer to SOP RL-QA-005 Troubleshooting Guide.

11.1 Preparation of solid samples, such as soil/bulk

11.1.1. Mix sample thoroughly by stirring with a clean plastic or wooden spoon or spatula.

11.1.2. Weigh a 0.25 ± 0.02 g portion of solid and record the exact weight to the nearest 0.01 g.

11.1.3. Measure additional aliquots of the designated samples for the duplicate, MS and MSD analyses.

11.2 Preparation of filters, wipes, etc.

11.2.1. Place samples in digestion containers.

11.3 Add blank media similar to samples into a beaker for the method blank.

11.4 Add blank media similar to samples into a beaker for the LCS. If an LCSD is required add blank media similar to samples into a second beaker. Spike the LCS/LCSD aliquot with 0.5 mL of the working LCS/MS spiking solution.

11.5 If MS/MSD required, spike each of the MS and MSD aliquots with 0.5mL of the working LCS/MS spiking solution.

11.6 Add 5 mL of ashing acid, Cover with a watchglass. Let stand for up to 30 minutes at room temperature.

11.7. Heat on a hotplate (ca. 120°C) until ca. 0.5 mL remains.

NOTE: Certain sample matrixes (i.e. some brands of wipes and filters) when reduced to ca. 0.5mL may combust. It may be necessary to increase the volume these matrixes are reduced to throughout the digestion process.

11.8 Add 2 mL of ashing acid and repeat step 11.7. Repeat this step until the solution is clear.

11.9 Remove the watch glass and rinse into the digestion container with reagent water.

11.10. Increase the temperature to ca. 150°C and take the sample to near dryness (ca. 0.5mL).

11.11. Dissolve the residue in 2-3 mL of dilution acid.

11.12. Bring the solution to the desired volume with dilution acid, typically 50 ml. Use either a volumetric flask or use the appropriate mark on a certified digestion tube. Record the volume on the analytical worksheet.

12. CALCULATIONS

12.1. Not Applicable.

13. METHOD PERFORMANCE

13.1. Method performance is determined by the analysis of matrix spike and matrix spike duplicate samples as well as method blanks and laboratory control samples. In general, the matrix spike recovery should fall within +/- 20 % and the matrix spike duplicates should compare within 20% RPD. Method blanks must meet the criteria specified in the determinative SOPs. The laboratory control samples should recover within 20% of the true value until in house control limits are established. Acceptance criteria are given in the determinative SOPs.

13.2. The initial demonstration study must be acceptable before the analysis of field samples under this SOP may begin. The results of the initial demonstration study may be used to extend a method for the analysis of other elements provided all acceptance criteria are met.

14. WASTE MANAGEMENT AND POLLUTION PREVENTION

All waste will be disposed of in accordance with Federal, State and Local regulations. Where reasonably feasible, technological changes have been implemented to minimize the potential for pollution of the environment.

14.1. Waste Streams Produced by the Method

- Aqueous acidic waste pH< 2. Waste is collected in an appropriate container. Transferred into an Acid Waste container color coded with Yellow tape and a Yellow cap.

- Radioactive Waste

Dry Radioactive waste shall be placed in a RAD Trash container. This waste stream can be distinguished by its yellow trash bags, and radioactive material stickers on the trash container.

All mixed waste shall be placed in the appropriate radioactive waste stream. The RAD waste stream color codes are the same as the non-radioactive waste streams but there are radioactive material stickers on the SAP container and spill tray.

Broken glassware shall be deposited in the appropriate broken glassware container. All Category I broken glassware is deposited in a White Broken Glass container. All Category II and/or III broken glassware is deposited in Magenta with White Radioactive Material box.

15. REFERENCES

15.1. NIOSH Manual of Analytical Methods (NMAM) NIOSH 7300.

15.2. CA-Q-S-006 Detection Limits

15.3. RL-MT-001, Inductively Coupled Plasma-Atomic Emission Spectroscopy, Spectrometric Method for Trace Element Analysis, Method 6010B.

15.4. RL-RPL-001 Reagent and Non-radioactive Standard Labeling.

15.5. RL-QA-005 Troubleshooting Guide, latest revision.

16. MISCELLANEOUS

16.1. Documentation and Record Management

The preparation benchsheet should, at a minimum, include the following information:

- Preparation date, analyst name, matrix, SOP reference.
- Sample ID, initial weight/volume and final weight/volume.
- Standards Documentation (source, lot, prep date, volume added).
- Analyst Signature.
- Reviewer's Signature and date.

17 REVISION HISTORY

- Revision 0, 6/14/2008
  - Updated to TestAmerica format.

- Revision 1, 5/27/2010
  - Reformatted body of text
  - Updated SOP references

- Revision 2, 9/22/2011
  - Referenced RL-QA-005
  - Typical final sample volume indicated
  - QC requirements corrected to reflect appropriate media

- Revision 3, 10/13/2011
  - Corrected typographical and grammatical errors.
  - Added note that reducing volume to 0.5 mL may result in combustion.

Company Confidential & Proprietary

Figure 1. Sample Preparation

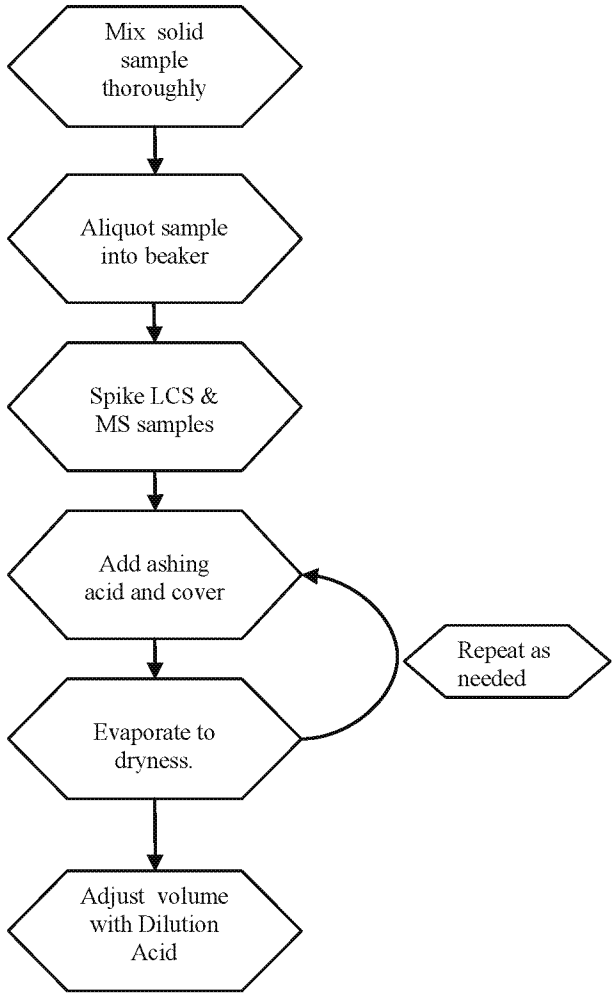

TABLE I. Method 7300 Approved Analyte List

ELEMENT	Symbol	CAS Number
Aluminum	Al	7429-90-5
Antimony	Sb	7429-90-5
Arsenic	As	7440-38-2
Barium	Ba	7440-39-3
Beryllium	Be	7440-39-3
Cadmium	Cd	7440-43-9
Calcium	Ca	7440-70-2
Chromium	Cr	7440-47-3
Cobalt	Co	7440-48-4
Copper	Cu	7440-50-8
Iron	Fe	7439-89-6
Lead	Pb	7439-92-1
Lanthanum	La	7439-91-0
Lithium	Li	7439-93-2
Magnesium	Mg	7439-95-4
Manganese	Mn	7439-96-5
Molybdenum	Mo	7439-98-7
Nickel	Ni	7440-02-0
Potassium	K	7440-09-7
Phosphorus	P	7723-17-0
Selenium	Se	7782-49-2
Silver	Ag	7440-22-4
Strontium	Sr	7440-24-6
Tellurium	Te	13494-80-9
Tin	Sn	7440-31-5
Thallium	Tl	7440-32-6
Titanium	Ti	7440-03-26
Tungsten	W	7440-33-7
Vanadium	V	7440-62-2
Zinc	Zn	7440-66-6
Zirconium	Zr	7440-67-7

Company Confidential & Proprietary

TABLE II. Summary Of Quality Control Requirements

QC PARAMETER	FREQUENCY	ACCEPTANCE CRITERIA	CORRECTIVE ACTION
Method Blank (MB)	One per sample preparation batch of up to 20 samples.	Refer to determinative SOPs: RL-MT-001	Redigest and reanalyze samples.
Laboratory Control Sample (LCS)	One per sample preparation batch of up to 20 samples.	Refer to determinative SOPs: RL-MT-001	Redigest and reanalyze all samples associated with the LCS.
Laboratory Control Sample Duplicate (LCSD)	See Laboratory Control Sample	Refer to determinative SOPs: RL-MT-001	See Corrective Action for Laboratory Control Sample
Matrix Spike (MS)	One per sample preparation batch of up to 20 samples.	Refer to determinative SOPs: RL-MT-001	Reprep not required unless preparation error suspected.
Matrix Spike Duplicate (MSD)	See Matrix Spike	Refer to determinative SOPs: RL-MT-001	See Corrective Action for Matrix Spike.

APPENDIX A
CONTAMINATION CONTROL GUIDELINES

The following procedures are strongly recommended to prevent contamination:

All work areas used to prepare standards and spikes should be cleaned before and after each use.

All glassware should be washed with detergent and tap water and rinsed with nitric acid followed by deionized water.

Proper laboratory housekeeping is essential in the reduction of contamination in the metals laboratory. All work areas must be kept scrupulously clean.

Powdered or Latex Gloves must not be used in the metals laboratory since the powder contains silica and zinc, as well as other metallic analytes. Only vinyl or nitrile gloves should be used in the metals laboratory.

Glassware should be periodically checked for cracks and etches and discarded if found. Etched glassware can cause cross contamination of any metallic analytes.

The following are helpful hints in the identification of the source of contaminants:

Reagents or standards can contain contaminants or be contaminated with the improper use of a pipette.

Improper cleaning of glassware can cause contamination.

Separate glassware if an unusually high sample is analyzed and soak with sulfuric acid prior to routine cleaning.

Company Confidential & Proprietary

Title: Fiber Counting by Phase Contrast Microscopy Based on NIOSH Method 7400

Approvals (Signature/Date):

Steve Wheland Technical Manager	5/31/12 Date	Dave Harbinson Health & Safety Manager	5/31/2012 Date
Sarah Nagel Quality Assurance Manager	5/31/12 Date	Jodie Carnes Laboratory Director	5/31/12 Date

Copyright Information:
This documentation has been prepared by TestAmerica Laboratories, Inc. and its affiliates ("TestAmerica"), solely for their own use and the use of their customers in evaluating their qualifications and capabilities in connection with a particular project. The user of this document agrees by its acceptance to return it to TestAmerica upon request and not to reproduce, copy, lend, or otherwise disclose its contents, directly or indirectly, and not to use it for any other purpose other than that for which it was specifically provided. The user also agrees that where consultants or other outside parties are involved in the evaluation process, access to these documents shall not be given to said parties unless those parties also specifically agree to these conditions.

THIS DOCUMENT CONTAINS VALUABLE CONFIDENTIAL AND PROPRIETARY INFORMATION. DISCLOSURE, USE OR REPRODUCTION OF THESE MATERIALS WITHOUT THE WRITTEN AUTHORIZATION OF TESTAMERICA IS STRICTLY PROHIBITED. THIS UNPUBLISHED WORK BY TESTAMERICA IS PROTECTED BY STATE AND FEDERAL LAW OF THE UNITED STATES. IF PUBLICATION OF THIS WORK SHOULD OCCUR THE FOLLOWING NOTICE SHALL APPLY:

©COPYRIGHT 2012 TESTAMERICA LABORATORIES, INC. ALL RIGHTS RESERVED.

RL-ASB-001

REVISION 5

Facility Distribution No. _____ Distributed To: _____

1.0 Scope and Application

This procedure is adapted from the American Industrial Hygiene Association (AIHA) module 2B and the National Institute for Occupational Safety and Health (NIOSH) method 7400, as means of detecting and reporting asbestos and other fibers by phase contrast microscopy (PCM).

This method does not allow for differentiation of fibers based on morphology. Although some experienced analysts are capable of selectively counting only fibers which appear to be asbestiform, there is presently no accepted method for ensuring uniformity of judgment between laboratories. It is, therefore incumbent upon all laboratories using this method to report total fiber counts.

2.0 Summary of Method

This procedure uses phase contrast microscopy to determine the quantity of fibrous material in a volume of air, in or around a worksite for industrial hygiene purposes.

Air filters acquired from a worksite are cut into quarters and one quarter is mounted on a glass microscope slide with an acetone fixation process. The slide is then read on a phase contrast microscope and ALL fibers meeting NIOSH 7400 criteria are counted.

3.0 Definitions

3.1 PCM – Phase Contrast Microscopy

4.0 Interferences

4.1 Chain-like particles may appear fibrous.

4.2 High levels of non-fibrous dust particles may obscure fibers in the field of view and increase the detection limit.

4.3 If serious contamination from non-asbestos fibers occurs in samples, other techniques such as transmission electron microscopy must be used to identify the asbestos fiber fraction present in the sample.

5.0 Safety

Employees must abide by the policies and procedures in the Corporate Environmental Health and Safety Manual (CW-E-M-001), Radiation Safety Manual and this document. This procedure may involve hazardous material, operations and equipment. This SOP does not purport to address all of the safety problems associated with its use. It is the responsibility of the user of the method to follow appropriate safety, waste disposal and health practices under the assumption that all samples and reagents are potentially hazardous. Safety glasses, gloves, lab coats and closed-toe, nonabsorbent shoes are a minimum.

5.1 Specific Safety Concerns or Requirements

5.2 Handling of sample filters is to be done under an asbestos approved fume hood. Once mounted and sealed, slides can be handled outside of a fume hood.

Company Confidential & Proprietary

5.3 Primary Materials Used

The following is a list of the materials used in this method, which have a serious or significant hazard rating. **Note: This list does not include all materials used in the method. The table contains a summary of the primary hazards listed in the MSDS for each of the materials listed in the table.** A complete list of materials used in the method can be found in the reagents and materials section. Employees must review the information in the MSDS for each material before using it for the first time or when there are major changes to the MSDS.

Material	Hazards	Exposure Limit (1)	Signs and symptoms of exposure
Acetone	Flammable	1000 ppm-TWA	Inhalation of vapors irritates the respiratory tract. May cause coughing, dizziness, dullness, and headache.
1 – Exposure limit refers to the OSHA regulatory exposure limit.			

6.0 Equipment and Supplies

6.1 Acetone flash vapor system.

6.2 Cover slips, 22 x 22-mm, No 1-1/2.

6.3 Graticule, Walton-Beckett type with 100-µm diameter circular field. Area = 0.00785 mm^2 at the specimen plane.

6.4 HSE/NPL phase contrast test slide.

6.5 Lacquer or clear nail polish

6.6 Microscope, positive phase contrast with green or blue filter, adjustable field iris, 8 to 10x eyepiece and 40 to 45x phase objective (total magnification ca. 400x). Numerical aperture = 0.65 to 0.75.

6.7 Microscope slides, glass, pre-cleaned, 25 x 75-mm x 1.0 mm.

6.8 Scalpel, #10 surgical steel, curved blade.

6.9 Stage micrometer (0.01-mm divisions).

6.10 Syringes or pipettes, 5µL and 100-500µL.

6.11 Telescope, ocular phase-ring centering.

6.12 Tweezers.

7.0 Reagents and Standards

Reagents are prepared from analytical reagent grade chemicals unless otherwise specified below. Reagent water, which must have an electrical resistivity of 1 megohm-cm or greater when obtained, is used throughout. Reagent water is obtained from the Nano-pure system. Label all reagents as outlined in procedure RL-RPL-001.

Company Confidential & Proprietary

NOTE: Consult the Material Safety Data Sheets for the properties of these reagents and how to work with them.

7.1 Acetone. CAUTION: Flammable.

7.2 Triacetin, reagent grade.

7.3 SHUR/Mount CAUTION: Flammable.

NOTE: Triacetin is not used if analyst is using SHUR/Mount.

8.0 Sample Collection, Preservation, Shipment and Storage

Sample collection and shipment will be the client's responsibility. Samples will be stored in Sample Receiving at room temperature until processing.

9.0 Quality Control

9.1 A minimum of one reference slide is to be read by the analyst on days samples are to be counted. This reference slide data is to be documented and tracked by the QA office. Labels on reference slides are to be changed periodically so the analyst does not become familiar with the reference slides.

9.1.1 From repeat blind counts on reference slides, the laboratory's intra and intercounter precision is determined by these slides and counts. Obtain separate values of relative standard deviation (S_r) for each sample matrix analyzed in each of the following ranges: 5-20 fibers in 100 graticule fields, >20-50 fibers in 100 graticule fields, and >50-100 fibers in 100 graticule fields. Maintain control charts for each of these data files.

9.1.2 Prepare and count field blanks along with the field samples. Report counts on each field blank.

> **NOTE:** The identity of the blank filters should be unknown to the analyst until all counts have been completed. If a field blank yields greater than 7 fibers per 100 graticule fields, report possible contamination of the samples to the supervisor.

9.1.3 Blind recounts are to be performed by the same analyst on 10% of filters in a batch (slides are relabeled by a person other than the analyst). Use the calculation in section 11.4 to determine whether fibers are randomly distributed on the face of the filter. If a sample fails the test, all samples from the batch shall be recounted and the results will be calculated. The average results of any samples failing the test shall be reported and a notation made that those particular samples failed the test for a statistically random distribution on the filter. If the fiber count for either or both of the counts is less than the detection limit (4 fibers per 100 fields), the calculation need not be made and the raw data should be noted as "Insufficient data for Statistical Test" or "IDST".

9.2 The analyst is a critical part of this analytical procedure. Care must be taken to provide a non-stressful and comfortable environment for fiber counting. An ergonomically designed chair should be used with the microscope eyepiece situated at a comfortable height for viewing. External lighting should be set at a level similar to the illumination level in the microscope to reduce eye fatigue. In addition, analysts should take 10-20 minute breaks from the microscope every one to two hours to limit fatigue. During these breaks, both eye and upper back/neck exercises should be performed to

relieve strain.

9.3 The laboratory shall participate in a proficiency testing program such as the AIHA-NIOSH Proficiency Analytical Testing (PAT) Program for asbestos and routinely field samples with other laboratories to compare performance of analysts.

10.0 Procedure

NOTE: If any parameter is found to be out of limits, consult supervision. Also, a nonconformance will be issued to the Quality Assurance Group.

NOTE: One time procedural variations are allowed if deemed necessary by the professional judgment of supervision to accommodate variation in sample matrix, radioactivity, chemistry, sample size or other parameters. Any variation in procedure shall require approval by supervision and immediate notification of the Quality Assurance Group. If contractually required, the client shall be notified prior to any procedure changes. A nonconformance memo shall be completed and forwarded to the Quality Assurance Group within one day of the supervisor's approval. The nonconformance memo will be filed in the project file.

NOTE: To resolve problems with instrumentation or support equipment when the solution is not contained in this SOP, refer to SOP RL-QA-005 Troubleshooting guide.

10.1 Sample Preparation

10.1.1 Filter cassette is opened under an asbestos approved fume hood.

10.1.2 Ensure the glass slides and the cover slips are free of dust and fibers.

10.1.3 Cut a wedge of ca. 25% of the filter area with a curved-blade surgical steel knife using a rocking motion to prevent tearing. Place the wedge, dust side up, on the slide.

10.1.4 Insert the slide with the wedge into the receiving slot of the "hot block" which should be used in a fume hood. Immediately place the tip of a micropipette or syringe containing ca. 250 µL acetone into the inlet port of the PTFE cap on the "hot block". Inject the acetone into the vaporization chamber with a slow, steady pressure on the plunger while holding the pipette firmly in place. After waiting ca. 3-5 seconds for the filter to clear, remove the pipette and slide from their ports.

10.1.5 Using a 5 µL pipette or syringe, immediately place ca. 3.0-3.5 µL triacetin on the wedge. If using SHUR/Mount instead, a single drop is used to secure wedge. Gently lower a clean cover slip onto the wedge at a slight angle to reduce bubble formation. Avoid excess pressure and movement of the cover slip.

> **NOTE:** If too many bubbles form or the amount of triacetin is insufficient, the cover slip may become detached within a few hours. If excessive triacetin remains at the edge of the filter under the cover slip, fiber migration may occur. If clearing is slow, warm the slide on a hotplate at ca. 50°C for up to 15 minutes to hasten clearing. Heat carefully to prevent gas bubble formation.

10.1.6 Mark the outline of the filter segment with a marker to aid in microscopic evaluation.

10.1.7 Glue the edges of the cover slip to the slide using lacquer or clear nail polish. Counting may proceed immediately after clearing and mounting are completed.

Company Confidential & Proprietary

NOTE: If using SHUR/Mount then step 10.1.7 should be omitted.

10.1.8 Filter Reporting and Issues:

10.1.8.1 Heavy Particulate – when the filter is obscured by a heavy non-fibrous particulate. This can happen when the contractor is cutting dry wall or during demolition activities. Report the samples as INVALID Heavy Particulate – do not count unless fibers can be seen. Report to the client that another sample may have to be collected.

10.1.8.2 Encapsulant – A liquid spray adhesive that abatement contractors use to "Lock Down" airborne fibers during final cleaning of a site. If the filter is not clearing properly it may be due to the encapsulant that was collected on the filter. Try to heat the slide on the hot plate then look at it under the microscope. If it is readable, count the slide and document the occurrence on the analytical worksheet. If it is unreadable, report it as INVALID – encapsulant. Report to the client that another sample may have to be collected.

10.1.8.3 Loose Dust – This happens when the sampling technician is working in a very dusty environment and not protecting the samples. Always use caution when opening the cassettes. If the cassette contains loose dust, close it immediately and open all other cassettes in that batch prior to handling that sample. When there is loose dust on the filter, it is hard to get an even fiber distribution. Part of the sample will be lost. Do not count the filter – document the occurrence on the analytical worksheet and report it as INVALID – loose dust. Report to the client that another sample may have to be collected.

10.1.8.4 Wet Filter – Asbestos abatement utilizes wet methods. It is not unusual to receive a wet filter if the sample was collected in an area where a sprayer is being used. Place the filter in a Petri Dish and cover, place the dish on a hot plate to dry. Heat for approximately 1 ½ to 2 minutes – DO NOT OVERHEAT, the filter may burn. Count the filter and document the procedure on the analytical worksheet. Report to the client that another sample may have to be collected.

10.1.8.5 TORN/DAMAGED Filter – The filter is very delicate and if not handled carefully it can be torn easily. Damage to the filter can occur in the field during sampling or in the lab during handling. Open the cassette carefully and observe the condition of the filter first. If the filter appears to be slightly damaged, like a tear or separated at the edge, make a slide and count. If there is heavy damage such as part of the filter is missing, report as INVALID – torn or damaged filter. Document the type of damage on the analytical worksheet. Report to the client that another sample may have to be collected.

10.2 **Calibration**

10.2.1 Follow the manufacturers' instructions for microscope adjustments. As least once daily, use the telescope ocular (or Bertrand lens) to ensure the phase rings are concentric. With each microscope, keep a logbook in which to record the dates of microscope cleanings and major servicing.

10.2.2 Each day a sample is examined perform the following:

10.2.2.1 Adjust the light source for even illumination across the field of view at the condenser iris.

Use Kohler illumination.

10.2.2.2 Focus on the particulate material to be examined. Make sure that the field iris is in focus, centered on the sample and open only enough to fully illuminate the field of view.

10.2.2.3 Check the phase shift detection limit of the microscope periodically for each analyst/microscope combination.

10.2.2.4 Center the HSE/NPL phase contrast test slide under the phase objective.

10.2.2.5 Bring the blocks of grooved lines into focus in the graticule area.

> **NOTE:** The slide contains seven blocks of grooves (ca. 20 grooves per block) in descending order of visibility. For asbestos counting the microscope optics must completely resolve the grooved lines in block 3 although they may appear somewhat faint. The grooved lines in blocks 6 and 7 must be invisible when centered in the graticule area. Blocks 4 and 5 must be at least partially visible but may vary slightly in visibility.

10.2.2.6 If image quality deteriorates, clean the microscope optics. If the problem persists, contact supervision.

10.2.2.7 Check field diameter with a NIST traceable stage micrometer once a year or after any major changes, disassembly or parts replacement.

10.3 **Sample Analysis**

10.3.1 Center the slide on the stage of the calibrated microscope under the objective lens. Focus the microscope to the plane of the filter, use coarse adjustment to get in the region of the plane, then switch to fine adjustment to focus properly on the filter.

10.3.2 Counting rules "A":

10.3.2.1 Count any fiber longer than 5 µm which lies entirely within the graticule area. Measure length of curved fibers along the curve.

10.3.2.2 Count only fibers with a length-to-width ratio equal to or greater than 3:1.

10.3.2.3 For fibers which cross the boundary of the graticule field:

10.3.2.3.1 Count as ½ fiber any fiber with only one end lying within the graticule area, provided that the fiber meets the above criteria.

10.3.2.3.2 Do not count any fiber which crosses the graticule boundary more than once.

10.3.2.4 Reject and do not count all other fibers outside the graticule area.

10.3.2.5 Count bundles of fibers as one fiber unless individual fibers can be identified by observing both ends of a fiber.

10.3.2.6 Count enough graticule fields to yield 100 fibers or count a minimum of 20 fields. Stop at 100 graticule fields regardless of number of fields.

10.3.3 Start counting from the tip of the filter wedge and progress along a radial line to the outer edge. When counting a graticule field, continuously scan a range of focal planes by moving the fine focus knob to detect very fine fibers which have become embedded in the filter. The small diameter fibers will be very faint but are an important contribution to the total count. A minimum counting time of 15 seconds per field is appropriate for accurate counting.

10.3.4 Select graticule fields randomly by looking away from the eyepiece briefly while advancing the mechanical stage. Ensure that, as a minimum, each analysis covers one radial line from the filter center to the outer edge of the filter.
10.3.5 When an agglomerate or bubble covers ca. 1/6 or more of the graticule field, reject the graticule field and select another. Do not report rejected graticule fields in the total number counted.

10.3.6 Do not count at edges where the filter was cut. Move in at least 1 mm from the edge.

10.3.7 Under certain conditions, electrostatic charge may affect the sampling of fibers. These electrostatic effects are most likely to occur when the relative humidity is low (below 20%), and when sampling is performed near the source of aerosol. The result is that deposition of fibers on the filter is reduced, especially near the edge of the filter. If such a pattern is noted during fiber counting, choose fields as close to the center of the filter as possible.

11.0 Calculations / Data Reduction

Counts are to be recorded on an analytical worksheet that provides as a minimum; counts for each field, filter identification number, analyst's name, date, total fields counted, average count, fiber density and comments. Average count is calculated by dividing the total fiber count by the number of fields observed. Fiber density (fibers/mm^2) is defined as the average count (fibers/field) divided by the field (graticule) area (mm^2/field).

11.1 Calculate and report fiber density on the filter, E (fibers/mm^2), by dividing the average fiber count per graticule field, F/n_f, minus the mean field blank count per graticule field, B/n_b, by the graticule field area, A_f (approx. 0.00785 mm^2).

$$E = \frac{\left(\frac{F}{n_f} - \frac{B}{n_b}\right)}{A_f} \text{ fibers/ mm}^2$$

NOTE: Fiber counts above 1300 fiber/mm^2 and fiber counts from samples with >50% of filter area covered with particulate should be reported as "uncountable" or "probably biased". Other fiber counts outside the 100-1300 fiber/mm^2 range should be reported as having "greater than optimal variability" and as being "probably biased".

11.2 Calculate and report the concentration, C (fibers/cc), of fibers in the air volume sampled, V (L), using the effective collection area of the filter, A_c (approx. 385 mm^2 for a 25-mm filter). Periodically check and adjust the value of A_c, if necessary.

$$C = \frac{(E)(A_c)}{V \cdot 10^3}$$

11.3 Report intralaboratory and interlaboratory relative standard deviations with each set of results. Precision depends on the total number of fibers counted. Relative standard deviation is documented in references for fiber counts up to 100 fibers in 100 graticule fields. As a first approximation, use 213% above and 49% below the count as the upper and lower confidence limits for fiber counts greater than 20.

11.4 Blind recounts are acceptable if:

$$\left|\sqrt{y_1} - \sqrt{y_2}\right| \leq 2.77\bar{y}S'r,$$

Where

$\bar{y} = (\sqrt{y_1} + \sqrt{y_2})/2$ and S'_r is the pooled RSD on sq root scale for the appropriate count range. S'_r is calculated for each fiber load range from recounts of the pool of reference slides available.

$$S'_r = \frac{1}{2}\left(\sqrt{\frac{S_r^{\,2} + S_r^{\,2} + ...}{n}}\right)$$

12.0 Method Performance

12.1 Demonstration of Capabilities /Training Requirements

The industrial hygiene program distinguishes two titles for those conducting analytical procedures within the laboratory. An analyst is one who has a bachelor's degree in chemistry or a related science. A technician is one who does not have a degree in chemistry or a related science.

All analysts and technicians shall complete a training course (an in-house course is acceptable) prior to performing the analysis on laboratory samples. Courses on sample preparation and instrument analysis may be taken separately or combined. See QA Manual for applicable training requirements.

All analysts and technicians shall have demonstrated ability to produce reliable results through accurate analysis of certified reference materials (CRMs), proficiency testing samples, or in-house quality control samples. This demonstration shall be done at a minimum of every six months and is documented.

All analysts and technicians shall have a minimum of twenty business days of hands-on experience conducting analyses in an industrial hygiene laboratory before initiation of independent work on customer samples.

13.0 Pollution Control

It is TestAmerica's policy to evaluate each method and look for opportunities to minimize waste generated (i.e., examine recycling options, ordering chemicals based on quantity needed, preparation of reagents based on anticipated usage and reagent stability).

14.0 Waste Management

The following waste streams are produced when this method is carried out:

- Flammable waste. Waste is collected in an appropriate container and placed in a Flammable waste container. Container is red with a self closing metal lid
- Radioactive Waste. Dry Radioactive waste shall be placed in a RAD Trash container. This waste stream can be distinguished by its yellow trash bags, and radioactive material stickers on the trash container.

15.0 References / Cross-References

15.1 National Institute for Occupational Safety and Health, August 1994, "Asbestos and Other Fibers by PCM", Method 7400", NIOSH Manual of Analytical Methods, 4th edition.

15.2 American Industrial Hygiene Association, April 2005, "Module 2B Industrial Hygiene Laboratory Accreditation Program (IHLAP) Specific Additional Requirements ", AIHA LQAP Policy Document.

15.3 RL-QAM-001 Richland Quality Assurance Manual, latest revision.

15.4 RL-QA-005 Troubleshooting Guide, latest revision

16.0 Method Modifications:

N/A

17.0 Revision History

- Revision 0, dated 2/19/08
  - Integration for TestAmerica and STL operations.
- Revision 1, dated 6/11/08
  - New TestAmerica Format
- Revision 2, dated 9/18/08
  - Blind recount criteria
  - NIST traceable requirement for micrometer
- Revision 3, dated 3/11/2010
  - Defined frequency of reference slide analysis to one per day of sample counting.
  - Defined counting rules as "A" and added attachment
- Revision 4, 5/23/2011
  - Referenced RL-QA-005
  - Reviewed and corrected formatting errors in Figure 1

- Revision 5, 5/29/2012
  - Section 7.3 SHUR/Mount was added to Reagents and Standards.
  - Section 10.1.5 was updated to include SHUR/Mount requirements.
  - In section 10.1.7, a note was added.

18 Attachments

18.1 Figure 1: "A " Rules

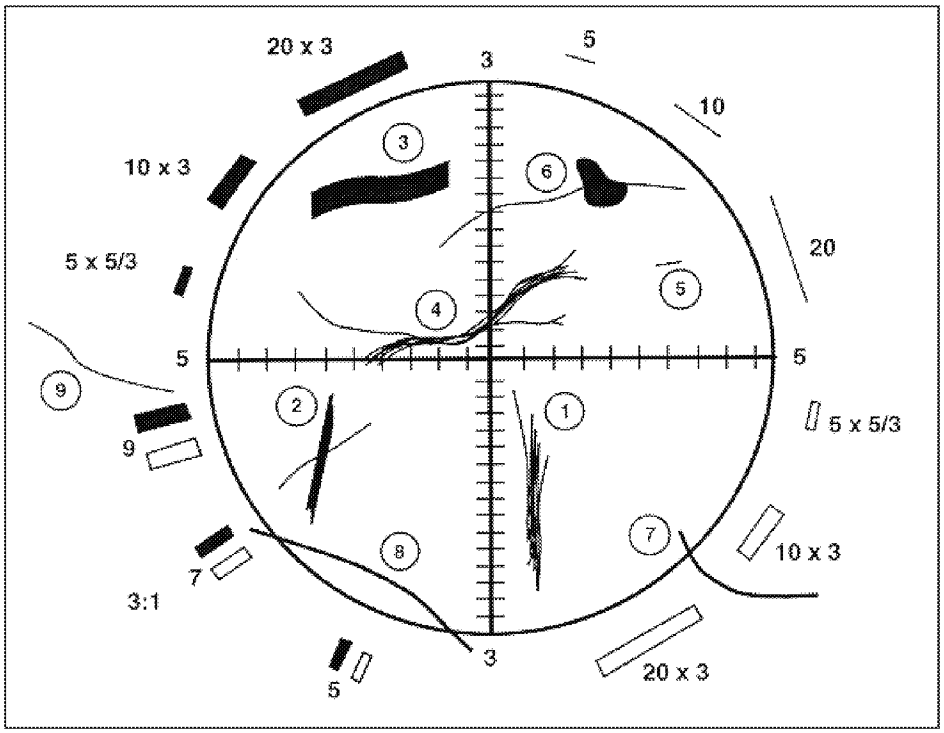

Object	Count	Discussion
1	1 fiber	Optically observable asbestos fibers are actually bundles of fine fibrils. If the fibrils seem to be from the same bundle the object is counted as a single fiber. Note, however, that all objects meeting length and aspect ratio criteria are counted whether or not they appear to be asbestos.
2	2 fibers	If fibers meeting the length and aspect ratio criteria (length >5 :m and length-to-width ratio >3 to 1) overlap, but do not seem to be part of the same bundle, they are counted as separate fibers.
3	1 fiber	Although the object has a relatively large diameter (>3 :m), it is counted as fiber under the rules. There is no upper limit on the fiber diameter in the counting rules. Note that fiber width is measured at the widest compact section of the object.
4	1 fiber	Although long fine fibrils may extend from the body of a fiber, these fibrils are considered part of the fiber if they seem to have originally been part of the bundle.
5	Do not count	If the object is <=5 um long, it is not counted.
6	1 fiber	A fiber partially obscured by a particle is counted as one fiber. If the fiber ends emanating from a particle do not seem to be from the same fiber and each end meets the length and aspect ratio criteria, they are counted as separate fibers.
7	1/2 fiber	A fiber which crosses into the graticule area one time is counted as 1/2 fiber.
8	Do not count	Ignore fibers that cross the graticulate boundary more than once.
9	Do not count	Ignore fibers that lie outside the graticule boundary.

ARCADIS

APPENDIX E

Environmental Protection Plan
Part 2 – CERCLA Stormwater
Plan

Department of the Navy
Base Realignment and Closure Program
Management Office West

FINAL
Appendix E
CERCLA Stormwater Plan

Hunters Point Naval Shipyard – Parcel G

San Francisco, California

December 2012

ARCADIS

Scott Morris, PE
Project Manager

FINAL Appendix E
CERCLA Stormwater Plan
Hunters Point Naval Shipyard – Parcel G, San Francisco, California

Prepared for:
Department of the Navy
Base Realignment and Closure Program
Management Office West

Prepared by:
ARCADIS U.S., Inc.
9095 Rio San Diego Drive
#240
San Diego
California 92108
Tel 619 291 7800
Fax 619 291 5400

Our Ref.:
CA000776.0002.00002

Date:
December 2012

This document is intended only for the use of the individual or entity for which it was prepared and may contain information that is privileged, confidential and exempt from disclosure under applicable law. Any dissemination, distribution or copying of this document is strictly prohibited.

Acronyms and Abbreviations vii

Amendment Log 1

1. CERCLA Stormwater Plan Requirements 1

1.1 Introduction 1

1.2 Substantiave Compliance 2

1.3 Availability and Implementation 2

1.4 Amendments 3

1.5 Retention of Records 3

1.6 Termination 4

2. Project Information 4

2.1 Site Background 4

2.1.1 Site History 5

2.1.2 Climate, Geology, and Hydrogeology 6

2.1.3 Nature and Extent of Contamination 7

2.1.3.1 Soil 7

2.1.3.2 Radiologically Impacted Sites 8

2.1.4 Remedial Action Description 8

2.1.5 Site Topography and Stormwater Flow 9

2.2 Stormwater Run-On from Off-Site Areas 10

2.3 Findings of the Construction Site Sediment and Receiving Water Risk Determination 11

2.4 Construction Schedule 12

2.5 Potential Construction Site Pollutants 12

2.5.1 Pollutant Source Assessment 12

2.6 Identification of Non-Stormwater Discharges 13

3. Best Management Practices 14

3.1 Erosion and Sediment Control 14

3.1.1 Erosion Control 14

3.1.1.1 EC-5, Soil Binders 15

3.1.1.2 EC-9, Earth Dikes and Drainage Swales 15

3.1.1.3 EC-10, Velocity Dissipation 15

3.1.1.4 WE-1, Wind Erosion Control 16

3.1.1.5 Run-On 17

3.1.2 Sediment Control 17

3.1.2.1 SE-1, Silt Fence 17

3.1.2.2 SE-5, Fiber Rolls 17

3.1.2.3 SE-6, Gravel Bag Berm 18

3.1.2.4 SE-7, Street Sweeping 18

3.1.2.5 SE-8, Sandbag Barrier 18

3.1.2.6 SE-10, Storm Drain Inlet Protection 18

3.1.2.7 TR-1 Stabilized Construction Exit 18

3.1.2.8 TR-2, Stabilized Construction Roadways 19

3.2 Non-Stormwater Controls and Waste Materials Management 19

3.2.1 Non-Stormwater Controls 19

3.2.1.1 NS-1, Water Conservation Practices 20

3.2.1.2 NS-3, Paving and Grinding Operations 20

3.2.1.3 NS-6, Equipment and Vehicle Cleaning 20

3.2.1.4 NS-8, Illicit Connection/Discharge 21

3.2.1.5 NS-9, Equipment and Vehicle Fueling 21

3.2.1.6 NS-10, Equipment and Vehicle Maintenance 21

3.2.1.7 NS-12, Concrete Curing 22

3.2.2 Waste and Materials Management 22

3.2.2.1 WM-1, Material Delivery and Storage 23

3.2.2.2 WM-2, Material Use 24

3.2.2.3 WM-3, Stockpile Management 24

3.2.2.4 WM-4, Spill Prevention and Control 24

3.2.2.5 WM-5, Solid Waste Management 25

3.2.2.6 WM-6, Hazardous Waste Management 25

3.2.2.7 WM-9, Sanitary and Septic Waste Management 25

3.2.2.8 WM-10, Liquid Waste Management 26

3.3 Post-Construction Stormwater Management Measures 26

4. BMP Inspection and Maintenance 26

5. Training Documentation 26

6. Responsible Parties 27

7. Construction Site Monitoring Program 27

7.1 Purpose 27

7.2 Visual Monitoring (Inspections) 28

7.2.1 Visual Inspection Requirements for Qualifying Rain Events 29

7.3 Non-Stormwater Discharge Monitoring 30

7.4 Monitoring for Pollutants not Visually Detectable in Stormwater 30

7.4.1 Sampling and Analysis 31

7.4.1.1 Stormwater Discharge Water Quality Sampling Locations 31

7.4.1.2 Stormwater Sample Collection for Field Analysis 31

7.4.1.3 Storm Water Sample Collection for Laboratory Analysis 32

7.4.1.4 Sample Handling and Custody 33

7.4.1.5 Decontamination of Sampling Equipment 35

7.5 Safety 35

8. References 36

Tables

1 List of Changes to be Field Determined

2 Sediment Risk Level

3 BMPs Selected for Erosion and Sediment Control

4 BMPs for Temporary Erosion Control

5 BMPs for Temporary Sediment Control

6 BMPs Selected for Non-stormwater and Waste Management

7 Temporary BMPs for Non-Stormwater

8 BMPs for Temporary Materials Management

9 Training Documentation

10 Project Site Personnel Responsible for CERCLA Stormwater Plan Activities

11 Risk Level 1 Inspection, Sampling, and Reporting Requirements

12 Summary of Analytes

Figures

1 Site Location Map

2 Parcel Map

3 BMPs for Parcel G Phase 1

4 BMPs for Parcel G Phase 2

Appendices

A General Permit

B Permit Registration Documents

C Amendment Certification Form

D Permit Registration Document Updates

E Risk Level Determination Documentation

F Construction Schedule

G BMP Fact Sheets

H Inspection Checklists

I Training Documentation

J Precipitation Frequency Data

Acronyms and Abbreviations

AB	aggregate base
AC	asphaltic concrete
AHA	Activity Hazard Analysis
ARCADIS	ARCADIS U.S., Inc.
BMPs	best management practices
CERCLA	Comprehensive Environmental Response, Compensation, and Liability Act
CFR	Code of Federal Regulations
COCs	chemicals of concern
CSMP	Construction Site Monitoring Program
HPNS	Hunters Point Naval Shipyard
K factor	soil-erodibility factor
LRP	legally responsible person (or Party)
LS factor	length and slope factor
Navy	Department of the Navy
NOI	Notice of Intent
NOT	Notice of Termination
NPDES	National Pollution Discharge Elimination System
PRDs	permit registration documents
QSD	Qualified SWPPP Developer
QSP	Qualified SWPPP Professional
RA	remedial action
RAWP	Remedial Action Work Plan
R factor	rainfall erosivity factor hillslope
RODs	Records of Decision
ROICC	Resident Officer in Charge of Construction
RPM	Remedial Project Manager
RUSLE	Revised Universal Soil Loss Equation
RWQCB	Regional Water Quality Control Board
SWP	Stormwater Plan
SWRCB	State Water Resources Control Board
TCRA	Time-Critical Removal Action
USEPA	U.S. Environmental Protection Agency
VOCs	volatile organic compounds
WDID	Waste Discharge Identification Number
WMP	Waste Management Plan
§	Section

Amendment Log

Project Name: Hunters Point Naval Shipyard Parcel G

Amendment No.	Date	Brief Description of Amendment, include section and page number	Prepared and Approved By	QSD Signature
			Name: QSD#	QSD Signature
			Name: QSD#	QSD Signature
			Name: QSD#	QSD Signature
			Name: QSD#	QSD Signature
			Name: QSD#	QSD Signature
			Name: QSD#	QSD Signature
			Name: QSD#	QSD Signature

1. CERCLA Stormwater Plan Requirements

1.1 Introduction

This CERCLA Stormwater Plan presents the substantive measures that will be implemented to minimize sediment and other pollutants in stormwater discharges during the remedial action (RA) at Parcel G, Hunters Point Naval Shipyard (HPNS), San Francisco, California (Figure 1). ARCADIS U.S. Inc. (ARCADIS) has been contracted by the Department of the Navy (Navy) to develop and implement the plans for this project under Naval Facilities Engineering Command Southwest Contract No. N62473-11-D-2226, Task Order No. 0002. This plan is included as Appendix E to the Remedial Action Work Plan (RAWP).

The RA to be implemented in Parcel G will address chemicals of concern (COCs) in soil and includes installation and restoration of durable covers made of asphaltic concrete (AC) over aggregate bases (AB). The durable covers will provide a physical barrier that will prevent exposure of humans and wildlife to COCs in soil.

The Navy will implement the substantive provisions of the California State Water Resources Control Board (SWRCB) National Pollutant Discharge Elimination System (NPDES) General Permit No. CAS000002, "Stormwater Discharges Associated With Construction And Land Disturbance Activities" Order Number 2009-0009-DWQ, as amended by 2010-0014-DWQ in order to comply with federal Clean Water Act ARARs and water quality state ARARS for discharge to surface water . This order is hereafter referred to as the "General Permit," and a copy of the order is included in this plan as Appendix A.

The Comprehensive Environmental Response, Compensation, and Liability Act (CERCLA) Stormwater Plan was designed to address the following objectives:

1. All pollutants and their sources, including sources of sediment associated with construction, construction site erosion, and all other activities associated with construction activity are controlled.

2. Where not otherwise required to be under a Regional Water Quality Control Board (RWQCB) permit, all non-stormwater discharges are identified and either eliminated, controlled, or treated.

3. Site best management practices (BMPs) are effective and result in the reduction or elimination of pollutants in stormwater discharges and authorized non-stormwater discharges from construction activity to the best available technology/best control technology standard.

4. Calculations and design details, as well as BMPs, for site run-on are complete and correct.

5. Stabilization BMPs installed to reduce or eliminate pollutants after construction are completed.

This document will be complemented by and used in conjunction with the Dust Control Plan and Waste Management Plan (Appendices E and H to the RAWP).

1.2 Substantiave Compliance

Because this RA is an on-site response action defined by CERCLA, a notice of intent (NOI), a waste discharge identification (WDID) number, a Certification Statement, a Notice of Termination (NOT), and other procedural requirements of the General Permit are not ARARs and the Navy is not subject to them. Under CERCLA, the federal government is also exempt from paying permit fees, such as the annual fee listed above.

The Navy and its contractor are responsible for abiding by the substantive requirements of the Construction General Permit, including performing a risk assessment; preparing a site map; implementing BMPs and complying with substantive federal and state requirements during construction as indicated above. Copies of the project-related PRDs are included in Appendix B.

1.3 Availability and Implementation

The CERCLA Stormwater Plan will be available at the construction site (in the Construction Office Trailer at HPNS) during working hours while construction is occurring and will be made available upon request by a State or Municipal Inspector. When the original CERCLA Stormwater Plan is retained by a crewmember in a construction vehicle and is not currently at the construction site, current copies of the BMPs and maps and drawings will be left with the field crew and the original CERCLA Stormwater Plan will be made available via a request by radio or telephone. The plan shall be implemented concurrently with the start of ground-disturbing activities.

1.4 Amendments

The CERCLA Stormwater Plan will be amended or revised by a QSD when:

- There is a reduction or increase in total disturbed acreage.
- BMPs do not meet the objectives of reducing or eliminating pollutants in stormwater discharges.
- There is a change in construction or operations that may affect the discharge of pollutants to surface waters, groundwater, or a municipal separate storm sewer system.
- There is a change in the project duration that changes the project's risk level.

The following items shall be included in each amendment:

- Who requested the amendment.
- The location of proposed change.
- The reason for change.
- The original BMP proposed, if any.
- The new BMP proposed.

Amendments shall be logged at the front of the CERCLA Stormwater Plan. The plan text shall be revised, replaced, and/or hand annotated as necessary to properly convey the amendment.

1.5 Retention of Records

Following completion of the construction phase of the project, original Plan records will be transferred to the Navy contractor's office in Emeryville, California, for storage and the CERCLA Stormwater Plan documentation will be included in the federal government's Administrative Record (as part of the Remedial Action Completion Report).

1.6 Termination

The Navy contractor will prepare a final site map and take photographs to verify that all CERCLA Stormwater Plan requirements have been met. The final site map and photographs will be submitted to the FFA signatories when the construction project is complete within 90 days of meeting all substantive CERCLA Stormwater Plan requirements for termination and final stabilization, including the following:

- The site will not pose any additional sediment discharge risk than it did prior to construction activities.
- All construction-related equipment, materials, and any temporary BMPs no longer needed are removed from the site.
- Post-construction stormwater management measures are installed.

The Navy contractor will demonstrate, through photographs, Revised Universal Soil Loss Equation (RUSLE) results or results of testing and analysis that the project meets all of the CERCLA Stormwater Plan requirements by one of the following methods:

- 70 percent final cover method (no computational proof required);
- RUSLE/RUSLE2 method (computational proof required); or
- custom method (discharger demonstrates that site complies with final stabilization).

2. Project Information

This section briefly describes HPNS and Parcel G, including the site location, history, geology and hydrogeology, nature and extent of contamination, and the remedial action to be performed at Parcel G. This section also discusses the potential run-on from off-site areas, the findings of the risk determination, the proposed construction schedule, potential pollutants, and identification of non-stormwater discharges.

2.1 Site Background

HPNS is located in the City and County of San Francisco, California (Figure 1). HPNS includes 866 acres (420 acres on land and 446 acres under water in San Francisco

Bay) in southeastern San Francisco on a peninsula that extends east into San Francisco Bay (Figure 1).

HPNS is currently divided into 11 parcels: B, C, D-1, D-2, E, E-2, F, G, UC-1, UC-2, and UC-3 (Figure 2). This RA is associated with one of those parcels: Parcel G. This parcel is located in the central portion of HPNS (Figure 2). Parcel G is roughly square in its plan view geometry and includes about 40.3 acres south of Spear Avenue, north of Manseau Street, west of Morrell Street and east of H Street. This parcel does not immediately border the San Francisco Bay.

The following subsections summarize the site history, geology and hydrogeology, nature and extent of contamination, and the remedial action to be performed at Parcel G.

2.1.1 Site History

In 1940, the Navy obtained ownership of HPNS for shipbuilding, repair, and maintenance activities. After World War II, activities at HPNS shifted to submarine maintenance and repair. HPNS was also the site of the Naval Radiological Defense Laboratory. HPNS was deactivated in 1974 and remained relatively unused until 1976. Between 1976 and 1986, the Navy leased most of HPNS to Triple A Machine Shop, Inc., a private ship repair company. In 1987, the Navy resumed occupancy of HPNS (Navy 2009a).

The HPNS property was placed on the National Priorities List in 1989, pursuant to CERCLA as amended by SARA, because past shipyard operations left hazardous substances on site. In 1991, HPNS was designated for closure pursuant to the Defense Base Closure and Realignment Act of 1990. Closure at HPNS involves cleanup of site contamination to make the property available for nondefense use (Navy 2009a).

Historically, most of Parcel G has been paved with AC (refer to historical aerial photograph [Figure 3 in the RAWP]). The historical subsurface storm drain and sanitary sewer utilities within this parcel were removed as part of the basewide ongoing time-critical removal action for radionuclides (Navy, 2006). Parcel G has roughly 23 existing buildings located throughout the site. Of the 23 buildings, there are 10 buildings larger than 20,000 square feet and 13 buildings smaller than 20,000 square feet.

The roadways at Parcel G have been in place since the original construction of HPNS in the 1940s.

2.1.2 Climate, Geology, and Hydrogeology

The climate at HPNS is characterized by partly cloudy, cool summers with little precipitation and mostly clear, mild winters with moderate precipitation. Prevailing winds blow west to east toward San Francisco Bay with an average wind speed of approximately 10 miles per hour. Normal annual rainfall in San Francisco (as monitored at the San Francisco International Airport) is approximately 20.1 inches (Wunderground 2012).

The peninsula that forms HPNS is within a northwest-trending belt of Franciscan Complex bedrock known as the Hunters Point Shear Zone. HPNS is underlain by five geologic units: the youngest of Quaternary age, and the oldest, the Franciscan Complex bedrock, of Jurassic-Cretaceous age. In general, the stratigraphic sequence of these geologic units, from youngest (shallowest) to oldest (deepest), is as follows: Artificial Fill, Undifferentiated Upper Sand Deposits, Bay Mud Deposits, Undifferentiated Sedimentary Deposits, and Franciscan Complex Bedrock.

Artificial Fill covers the entire surface at Parcel G. The Bay Mud separates the Undifferentiated Upper Sands and the Artificial Fill from the lower Undifferentiated Sedimentary Deposits throughout Parcel G.

The Franciscan Complex contains a variety of rock types, including basalt, chert, sandstone, shale, and serpentinite. Some of these rock types contain wide-ranging concentrations of naturally occurring metals; serpentinite also contains naturally occurring asbestos minerals.

Parcel G consists of flat lowlands with surface elevations between 7 and 11 feet above mean sea level (msl). The parcel was constructed in the 1940s by placing borrowed fill material from various sources, including crushed serpentinite bedrock from the adjacent highlands as well as dredged sediments.

The hydrostratigraphic units at Parcel G include the A-aquifer, the aquitard, the B-aquifer, and the deep bedrock water-bearing zone. The A-aquifer consists mainly of unconsolidated Artificial Fill that overlies the aquitard and bedrock and forms a continuous zone of unconfined groundwater across the parcel. Undifferentiated Upper Sand Deposits and shallow bedrock also are part of the A-aquifer at various locations

across Parcel G. The A-aquifer extends to about 15 feet below msl over most of Parcel G. The B-aquifer consists mainly of discontinuous lenses of Undifferentiated Sedimentary Deposits that overlie bedrock or are contained within the Bay Mud Deposits at a few locations. Bay Mud Deposits act as an aquitard that separates the A- and B-aquifers throughout Parcel G. The aquitard zone varies in thickness but extends from about 15 to about 45 feet below msl and is thickest in the southern sections of the parcel. The B-aquifer is found at depths ranging from about 10 feet below msl in the central part of Parcel G to around 40 feet below msl in the southern portion. The bedrock water-bearing zone is not considered an aquifer because of its low capacity for water production (primarily from fractures). The bedrock surface dips eastward toward the bay from about 5 feet below msl in northern Parcel G to about 90 feet below msl at the southern parcel boundary.

Groundwater elevations in the A-aquifer at Parcel G range from about 5 feet above msl in inland (northern) areas to near msl in southern areas closer to the shoreline. In general, groundwater flows to the southeast and southwest, away from a slight groundwater divide along the central, long axis of the parcel and follows the topographic gradient toward San Francisco Bay (ChaduxTt 2010).

2.1.3 Nature and Extent of Contamination

The Navy has identified activities associated with known or potential chemical releases at Parcel G and has conducted environmental investigations to identify and assess the nature and extent of contaminants in soil and groundwater. The following subsections briefly summarize the nature and extent of contamination at Parcel G. The Records of Decision (RODs; Navy 2009a and 2009b) and the Final Feasibility Study Reports for Parcels C and D (SulTech 2007 and 2008) provide more details on the nature and extent of contamination.

2.1.3.1 Soil

The COCs in soil at Parcel G that pose a potential risk to human health based on current and reasonably anticipated future land uses are metals and asbestos. Elevated concentrations of metals, including arsenic, manganese, and lead, are likely attributable to naturally occurring metals in the bedrock fill quarried to build the shipyard in the 1940s. However, the RA (i.e., durable cover) developed in the Remedial Design will address metals in soil, regardless of their source, by eliminating the exposure pathway (ChaduxTt 2010). Petroleum hydrocarbons were also present in

the soil and groundwater at Parcel G. All known petroleum sites received regulatory closure as a result of remediation and risk evaluation (ITSI, 2011).

2.1.3.2 Radiologically Impacted Sites

The Navy identified radiologically impacted sites, including buildings, equipment, and infrastructure at Parcel G associated with the former use of general radioactive materials and decontamination of ships used during atomic weapons testing in the South Pacific (Naval Sea Systems Command 2004). The Navy conducted a time-critical removal action (TCRA) to address potential radioactive contamination in buildings, fill areas, former building sites, storm drains, and sanitary sewers at Parcel G (see Tetra Tech, 2011 for Remedial Action Completion Report for the TCRA). There are no radiological concerns on Parcel G.

2.1.4 Remedial Action Description

A durable cover is the remedy selected to prevent contact with COCs that may be present at Parcel G as specified in the RODs (Navy 2009a and 2009b). The durable cover over the site will consist of new AC, concrete over top of AB or within buildings as existing or repaired building foundations. Existing AC surfacing that is intact or repaired will also constitute a durable cover.

The primary design criterion for durable covers, as specified in the RODs, is to prevent human exposure to potentially contaminated soil (Navy 2009a and 2009b). The existing asphalt pavement, which covers approximately 65 percent of Parcel G, meets this criterion where it is either intact or where it can be repaired. The existing asphalt pavement, primarily existing roads and parking areas, will be repaired as necessary to create a continuous, intact asphalt pavement cover over Parcel G.

The existing building foundations are also considered a component of the durable cover. The existing building foundations prevent human contact with the potentially contaminated soil beneath them. The building foundation covers are considered durable because they are nonerodible and would require deliberate and destructive actions to expose the underlying soil. The building foundations will be inspected and repaired, as needed, to ensure a continuous intact cover is maintained over Parcel G.

In summary, the nonerodible or erosion-resistant covers over Parcel G will be implemented as follows:

- Existing asphalt pavement not requiring repairs will be left in place in its current condition. Existing concrete pads, utilities, railroad tracks, and other permanent structures within intact paved areas will also be left in place in their current condition.

- Existing asphalt pavement with repairable cracks or other minor issues will be repaired to a state that satisfies the RODs, or a minimum thickness of 6 inches.

- Existing building foundations will be left in place in their current condition or modified as needed to prevent contact with the underlying soil.

- Some isolated portions of the existing asphalt pavement may be beyond repair requiring replacement or addition of new AC and potentially AB.

- A soil cover will be constructed over the existing vegetated slope.

2.1.5 Site Topography and Stormwater Flow

The existing topography on Parcel G consists of flat lowlands, with surface elevations between 8 and 10 feet above mean sea level. The parcel was constructed in the 1940s by placing borrowed fill material from various sources, including crushed serpentinite bedrock from the adjacent highlands and dredged sediments (ChaduxTt 2010).

Most of Parcel G is paved and covered with imported road base and will remain so during the various phases of work. The historical subsurface storm drain and sanitary sewer utilities within Parcel G were all removed as part of the basewide ongoing TCRA for radionuclides (Navy 2006). Some catch basins remain but, instead of discharging to San Francisco Bay, they were plugged at prior pipe location to prevent flow conveyance.

The basic drainage pattern in place for Parcel G is the movement of runoff in an east-west direction away from the existing buildings toward the existing swales located in each of the four north-south streets. Once the flow is intercepted by the swale it flows to the swales termination point at the southerly end of the site. During construction, fiber roll BMPs will be placed on both sides of each existing swale to trap and settle out sediment found in sheet flow that would otherwise make its way into the channel downstream. Also, fiber roll BMPs will be installed along the northern edge of Manseau Street where swales terminate in order to prevent sediment transport across Manseau to the existing east-west channel that conveys flow to the east (Figure 3). After the

completion of paving operations, any sediment that has been deposited will be cleaned up with a street sweeper on a daily basis.

In order to control and prevent movement of sediment from the site, work will be planned and sequenced so that the four existing north-south swales will not be connected to the receiving off-site channel located in Manseau Street until the portions of the site north of the proposed culverts as shown on Figures 3 and 4 have been paved. Prior to connecting the swales to the existing channel, the swales will be lined with fiber rolls. The swales will be paved concurrent with the culvert installation, both of which will follow paving of the flat upland portions of the site.

2.2 Stormwater Run-On from Off-Site Areas

To address site run-on, calculations to quantify run-on from adjacent parcels were performed to guide BMP implementation. Parcel G is a relatively flat site adjacent to flat areas on all sides. The far eastern portion of Parcel E (approximately 3.4 acres) and the entirety of Parcel UC-1 with some contributing run-on from the slope to its north (approximately 4.8 acres) are anticipated to enter the Parcel G site based on planned drainage patterns of the durable cover on Parcel UC-1 and the fact that the far eastern portions of Parcel E currently drain to the existing swale in H Street.

The modified rational method was used to for calculating run-on from the two contributing drainage areas:

$$Q = C \times I \times A$$

Where:
Q = flow in cubic feet per second (cfs)
C = permeability coefficient (0=entirely permeable, 1=impermeable)
I = rainfall intensity in inches per hour
A = area in acres

A permeability coefficient of 1, conservatively representing no permeability during construction and paved conditions, with a rainfall intensity of 0.2 inches per hour, which is equivalent to a 50-year, 24-hour design storm event according to the National Oceanic and Atmospheric Administration (NOAA) Precipitation Atlas 14, Volume 6, Version 2 for Hunter's Point (NOAA, 2012; Appendix J), were used. The calculated run-on is approximately 0.68 cfs from Parcel E along H Street on the west and 0.96 cfs from Parcel UC-1 and Spear Avenue on the north.

BMPs to control run-on may be implemented upslope of active grading areas as a precautionary measure, if deemed appropriate by the QSP (i.e. run-on is observed entering or is historically known to have entered the work areas). If conditions change such that run-on from off-site areas becomes significant, the SWPPP will be amended to include assigned BMPs to divert or redirect flow away from the site.

2.3 Findings of the Construction Site Sediment and Receiving Water Risk Determination

Risk from construction site sediment and receiving water was evaluated using the procedure outlined in Appendix 1 of the General Permit. The procedure to calculate the risk level involves two steps: (1) evaluating the project sediment risk factor and (2) evaluating the receiving water risk factor. Risk level is then calculated using the Sediment Risk Level table in the General Permit (Table 2). Monitoring and sampling requirements are based on the risk level assigned.

Sediment risk was determined using the Risk Determination Worksheet provided in Appendix 1 of the General Permit. Three factors are used to calculate the sediment risk factor: (1) rainfall erosivity factor (R factor), (2) soil-erodibility factor (K factor), and (3) hillslope length and slope factor (LS factor). The R factor was determined using guidance provided by the SWRCB while the USEPA Rainfall Erosivity Calculator undergoes maintenance. The R factor for Parcel G was calculated to be 22.36. The K factor was determined to be 0.25, the most conservative estimate for soil erodibility at the parcels. The LS factor was determined from topographic data for the project areas. The average length of slope and slope percent for the project areas were determined to be 187.5 feet and 0.985 percent, respectively, which provided an LS factor of 0.06.

The watershed erosion estimate was determined to be 0.3354 tons per acre, equivalent to a low sediment risk factor. Appendix E contains all documentation for the risk factor calculations.

Receiving water risk was determined from the SWRCB databases, available from their website. On October 11, 2011, USEPA issued its final decision regarding the water bodies and pollutants USEPA added to California's 2010 Clean Water Act §303(d) List. HPNS is not currently in the vicinity of a 303(d)-listed water body for sediment and siltation. Additionally, surface water from HPNS primarily collects in designated areas and infiltrates into the ground because no active storm drain lines are present that discharge to San Francisco Bay. Therefore, the receiving waters for the project have a low risk factor.

The combined risk level for the project site is a Risk Level 1 category. Stormwater management requirements for Risk Level 1 sites are provided in Attachment C of the General Permit (Appendix A).

2.4 Construction Schedule

The schedule anticipated for the RA at Parcel G is presented in Appendix F, and includes the anticipated start and end dates of construction, as well as phases of significant grading activities.

2.5 Potential Construction Site Pollutants

Potential pollutant sources were assessed to identify construction materials that will be used and activities to be performed that have the potential to contribute pollutants other than sediment to stormwater runoff. A list of potential pollutant sources was created, and any areas of the site where additional BMPs are necessary to reduce or prevent pollutants in stormwater and non-stormwater discharges were identified.

2.5.1 Pollutant Source Assessment

Potential pollutant sources in soil and sediment in the project areas that pose a potential risk to human health or ecological receptors include naturally occurring metals, specifically arsenic and manganese. Elevated concentrations of metals are likely attributable to naturally occurring metals in the bedrock fill quarried to build the shipyard in the 1940s.

The RWQCB's Impaired Water Bodies web page, which includes California's 2010 303(d) list of impaired waters, was accessed to identify the receiving water risks associated with the San Francisco Bay at HPNS (SWRCB 2012). The Central San Francisco Bay (bay and harbor areas), including India Basin and South Basin, is listed as impacted by chlordane, dichlorodiphenyltrichloroethane, dieldrin, dioxin compounds, furan compounds, mercury, polychlorinated biphenyls (dioxin like and non-dioxin like), selenium, and trash. Trash will be managed through the implementation of good housekeeping BMPs throughout the construction period. None of the other pollutants listed above are considered contaminants of concern at Parcel G; however, all soil at HPNS contains naturally occurring metals, including mercury and selenium.

Radionuclides of concern at Parcel G have been addressed in previous screenings (Naval Sea Systems Command 2004) and TCRAs (Navy 2009a and 2009b). As the

radiological remediation goals established in the RODs have been met, radionuclides are not a potential pollutant source.

Volatile organic compounds (VOCs) have been detected in soil vapor and in groundwater in Parcel G; however, all detections were greater than 5 feet below ground surface. Soil grading will only extend to a depth of 2 feet below ground surface. It is unlikely that impacted soil vapor or groundwater will be encountered during construction; therefore, VOCs are not a potential pollutant source.

Although all petroleum sites have received regulatory closure, petroleum hydrocarbons may also be present in the soil and groundwater at the site and will be analyzed in any run-off releases.

Potential pollutant sources of construction material are as follows:

- Graded soil
- Miscellaneous removed debris
- AB used to level grading in paved areas
- Asphalt used for paving

The potential pollutant sources listed above could leach pollutants to stormwater or become entrained in runoff; therefore, they were considered when developing the BMPs in Section 3 in accordance with the requirements of the General Permit. For a full and complete list of on-site pollutants, refer to the Material Safety Data Sheets, which are retained on site at the construction trailer.

2.6 Identification of Non-Stormwater Discharges

The following materials will be used and generated during implementation of the RA and may produce non-stormwater discharges of pollutants:

- Diesel and gasoline fuel used for mechanical equipment
- Fluids in vehicles and equipment that include fuels and lubricating and hydraulic oils

- Runoff from dust control applications of water or dust palliatives

Steps will be taken, including implementation of appropriate BMPs, to ensure that such discharges are eliminated, controlled, disposed of, or treated on site.

3. Best Management Practices

This section describes the BMPs that will be implemented during the project. The discussions of BMPs have been separated in to the following subsections:

- Section 3.1, Erosion and Sediment Controls
- Section 3.2, Non-Stormwater Controls and Waste Materials Management
- Section 3.3, Post-Construction Stormwater Management Measures

BMPs will be implemented, modified, and maintained to reflect the phase of construction and the weather conditions. To be effective, some BMPs must be installed before the site is disturbed (e.g., to provide protection during grading activities or to reduce or minimize pollution from historical areas of contamination during construction). Tables 3 through 8 summarize the BMPs selected for the RA at Parcel G.

3.1 Erosion and Sediment Control

Erosion and sediment controls are required by the General Permit to effectively reduce or eliminate sediment-related pollutants in stormwater discharges and authorized non-stormwater discharges from the site. This section identifies the BMPs applicable for erosion and sediment. Table 3 lists the soil BMPs selected for this project and provides references to specifications associated with each of the selected BMPs (included in Appendix G).

3.1.1 Erosion Control

Erosion control, also referred to as soil stabilization, consists of source control measures that are designed to prevent soil particles from detaching and becoming transported in stormwater runoff. BMPs for erosion control protect the soil surface by covering and/or binding soil particles.

This construction project will implement the following practices to provide effective temporary and final erosion control during construction:

1. Control the area of soil-disturbing activities such that the Contractor is able to quickly and effectively implement BMPs for erosion control.

2. Stabilize non-active areas within 14 days of the end of construction activities or sooner if stipulated by local requirements.

3. Control erosion in concentrated flow paths by applying erosion control blankets, check dams, or alternate methods.

4. Apply permanent erosion controls to remaining disturbed soil areas prior to the completion of construction.

Sufficient erosion control materials shall be maintained on site to allow implementation in conformance with this CERCLA Stormwater Plan. Table 4 indicates the BMPs that will be implemented to control erosion on the construction site. Appendix G contains the fact sheets for BMPs for temporary erosion control. BMPs for material management shall be implemented in accordance with the following guidelines and with the BMP fact sheets provided in Appendix G. The following subsections provide additional guidance on implementation of BMPs for erosion control.

3.1.1.1 EC-5, Soil Binders

Soil binders will be applied to stockpiles and may be applied to exposed surfaces, in conjunction with other BMPs, to provide temporary protection against water and wind induced erosion.

3.1.1.2 EC-9, Earth Dikes and Drainage Swales

Drainage swales will serve as the primary conveyance for draining Parcel G both during and after construction of the durable cover. The site will be graded to direct sheet flow to the nearest swale, which will ultimately be connected to the existing drainage channel in Manseau Street that discharges to San Francisco Bay.

3.1.1.3 EC-10, Velocity Dissipation

Measures to ensure that erosion is prevented or controlled will be increased in areas where soil is disturbed when seasonal storm events (precipitation events isolated by a

minimum of 48 hours that produces at least half an inch of precipitation) are forecasted or if the RA extends into the rainy season. This BMP will be used particularly at the inlets and outlets of the proposed culverts or any location of concentrated flow.

3.1.1.4 WE-1, Wind Erosion Control

Existing road base material and existing AC surface conditions will be disturbed (approximately 26 acres in total); however, construction of durable cover will be planned so as to complete durable cover construction by street and thus minimize disturbed areas to less than 5 acres and complete cover operations as soon as possible once these areas have been disturbed. Therefore, contributions of dust and sediment from disturbed areas are expected to be minimal. Grading areas will be managed appropriately through implementation of BMPs to prevent runoff and the generation of dust.

Wind erosion at the site is anticipated to be the largest potential contributor to erosion due to the high winds along the shoreline. To minimize wind erosion, the following BMPs will be implemented:

- Exposed soil will be sprayed with water for dust control. The amount of dust suppression water will be controlled to prevent runoff of non-stormwater from the sites.
- Temporary spoils piles generated from grading will be kept wet or covered as needed.
- Vehicle traffic will be limited to developed roads; off-road cross-site traverses will be taken only when absolutely necessary.
- Unpaved areas traveled by heavy equipment used to perform grading operations will be watered as needed to reduce fugitive dust. Vehicle speeds on unpaved areas will not exceed 10 miles per hour.
- When wind speeds exceed 20 miles per hour, grading or importing will be monitored and suspended if dust is unmanageable.
- Import material stockpiles will be wetted or covered to prevent fugitive dust.

3.1.1.5 Run-On

If it is deemed necessary by the QSP during implementation of the RA (i.e. run-on is observed entering or is historically known to have entered the work areas), BMP materials will be placed upslope and along the parcel boundaries north of Spear Avenue and west of H Street to divert flow in areas where stormwater might run on to the site.

3.1.2 Sediment Control

Sediment controls are temporary or permanent structural measures that are intended to complement the selected erosion control measures and reduce sediment discharges from active construction areas. Sediment controls are designed to intercept and settle out soil particles that have been detached and transported by the force of water.

Sediment load is not expected to change because surface disturbance will be small and soil disturbances will be short-lived. No net increase in the sediment load relative to preconstruction levels is expected to occur.

Table 5 indicates the BMPs that shall be implemented to control sediment on the construction site. Appendix G contains fact sheets for BMPs for temporary sediment control. BMPs for material management shall be implemented in accordance with the following guidelines and with the BMP fact sheets provided in Appendix G. The following subsections provide additional guidance on implementation of BMPs for sediment control.

3.1.2.1 SE-1, Silt Fence

Silt fence consists of woven geotextile stretched across and attached to supporting posts used to detain sediment-laden water, promoting sedimentation behind the fence and permitting clear water to permeate the fabric. Silt fences may be used along the site perimeter (e.g. when run-on is observed entering the site), along drainage swales or culvert inlets, and around temporary stockpile areas. Silt fences will be used to surround and protect existing monitoring wells from being impacted by stormwater runoff in conjunction with orange construction fencing for visibility.

3.1.2.2 SE-5, Fiber Rolls

Fiber rolls are used to control sediment by reducing flow velocity and allowing sediment to settle as it is transported by sheet flow. Fiber rolls will be used around stockpile perimeters, along the site perimeter (e.g. when run-on is observed entering the site),

and along or in drainage swales. Fiber rolls may also be used as a form of storm drain inlet protection.

3.1.2.3 SE-6, Gravel Bag Berm

Gravel bag berms allow for water to temporarily pond while allowing sediment to settle and perform in a manner similar to a robust silt fence. Gravel bag berms may be used to control sediment around stockpile areas and to prevent sediment from flowing off site.

3.1.2.4 SE-7, Street Sweeping

Sweeping of paved areas will occur on a daily basis and within 48 hours of a predicted rain event at the ingress and egress of vehicular areas. Sweeping will also be conducted on on-site and off-site haul routes on HPNS.

3.1.2.5 SE-8, Sandbag Barrier

Sandbag barriers are a series of sand-filled bags placed on level contour to intercept or to divert sheet flows. Sandbag barriers placed on a level contour create conditions conducive to ponding, allowing sediments to settle out. Sandbags will be placed at locations appropriate for filtering and directing sediment- or pollutant-laden stormwater runoff that flows away from areas disturbed by intrusive activities. Sandbag barriers may also be used to divert run-on, if areas of significant concentrated run-on are identified (none are anticipated for the project).

3.1.2.6 SE-10, Storm Drain Inlet Protection

All storm drain inlets within 50 feet of active work areas on site will be surrounded with gravel bags, and the storm drain grates will be covered with filter fabric to protect them from sediment-laden runoff entering the grates (Figures 3 and 4).

3.1.2.7 TR-1 Stabilized Construction Exit

Vehicles and equipment moving off site can track soil and sediment onto public roads. The following BMPs will be implemented for track-out control:

- Vehicles and equipment leaving the construction sites where soil has been disturbed will be cleaned before entering public roadways. Rumble strips will be installed at the main project area exit in the contaminant reduction zone (Figure 3) and the Hussey Street exit. Trucks and equipment will be inspected visually for dirt

and mud prior to leaving the site (i.e., soil stockpile area). Visible dirt and mud will be removed from vehicles and equipment prior to exiting the site using dry methods at the contamination reduction zones indicated on Figure 8 of the RAWP.

- Only essential vehicles and equipment are permitted to enter areas where soil was disturbed.
- Vehicles and equipment will use designated entrances and on-site travel routes and will be kept off of soil outside of the work area to the degree possible.
- Vehicles traveling on unpaved roads are limited to speeds less than 10 miles per hour.

3.1.2.8 TR-2, Stabilized Construction Roadways

Primary haul routes through unpaved portions of the site will be clearly marked to indicate areas where heavier traffic is permitted through the site. Aggregate may be placed in these areas to further stabilize the existing ground surface prior to paving.

3.2 Non-Stormwater Controls and Waste Materials Management

Controls are required to effectively reduce or eliminate pollutants associated with material storage, material use, and waste management, and to reduce and properly manage non-stormwater that is used or generated on site. This section identifies the BMPs applicable for waste materials. Table 6 lists the non-stormwater and waste materials BMPs selected for this project and provides references to specifications associated with each of the selected BMPs (included in Appendix G).

3.2.1 Non-Stormwater Controls

The selection of non-stormwater BMPs is based on the list of construction activities with a potential for non-stormwater discharges identified in Section 2.5 of this plan. Table 7 indicates the BMPs that shall be implemented to control non-stormwater on the construction site. Appendix G provides the fact sheets for BMPs for temporary non-stormwater control. BMPs for material management shall be implemented in accordance with the following guidelines and with the BMP fact sheets provided in Appendix G. The following subsections provide additional guidance on implementation of BMPs for non-stormwater discharges.

3.2.1.1 NS-1, Water Conservation Practices

Water conservation practices will be implemented during all construction activities in a manner that avoids causing erosion and the transport of pollutants off site. Water used to control dust will be managed to ensure that excessive water is not applied. Also, dry methods for decontamination of equipment on the construction site will be used. Potential water usage at Parcel G is limited to spraying exposed soil to suppres dust and to moisture condition backfill materials.

3.2.1.2 NS-3, Paving and Grinding Operations

Measures will be taken during asphalt grinding to prevent the waste material generated from potentially being transported in stormwater runoff. Temporarily stockpiled asphalt grindings and rubble will be placed in stabilized stockpile areas, surrounded with BMPs, and covered.

3.2.1.3 NS-6, Equipment and Vehicle Cleaning

Cleaning will be performed by first knocking dirt and mud off vehicles and equipment using shaker plates, brooms, or shovels. Then, dry methods will be used for cleaning vehicles and equipment in conjunction with the following BMPs:

- The amount of off-road travel will be limited except for heavy equipment used to grade soil and restore the site. Nonessential travel on unpaved areas will not be allowed.
- Heavy equipment, such as excavators or scrapers, will remain on site through the duration of the RA and will only require cleaning when they demobilize.
- Designated areas for vehicle and equipment cleaning will be established where runoff is not likely to be generated and away from surface waters and existing storm drains.
- Steam cleaning is not permitted on the sites.
- Soaps and solvents will not be used to clean vehicles and equipment.
- Employees and subcontractors will be trained in pollution prevention measures.

3.2.1.4 NS-8, Illicit Connection/Discharge

All site workers and subcontractors will be trained to identify illicit connections and illegal dumping, and they will be required to report them to the ROICC immediately upon discovery.

3.2.1.5 NS-9, Equipment and Vehicle Fueling

The following BMPs will be implemented for equipment and vehicle fueling:

- Support and passenger vehicles will be fueled at commercial facilities away from HPNS.
- Equipment will be fueled off site to the extent practicable; when necessary, equipment will be fueled only in designated fueling areas away (at least 50 feet) from surface waters and storm drains.
- Vehicles and equipment will be fueled only by staff that is trained in proper fueling and cleanup procedures. Trained staff must be present during fueling at all times.
- Spill containment materials, equipment, and facilities will be readily available where equipment is fueled. Absorbent spill cleanup materials and spill kits will be available on trucks from which fuel is dispensed and on equipment with hydraulics. The cleanup materials will be disposed of properly after use.
- Drip pans (or disposable plastic sheeting) will be used during vehicle and equipment fueling.
- Only nozzles equipped with an automatic shutoff to control drips will be used to fuel vehicles and equipment. Any fuel that is spilled will be immediately removed along with any contaminated soil.
- All fueling operations on site will comply with federal, state, and local requirements.

3.2.1.6 NS-10, Equipment and Vehicle Maintenance

The following BMPs will be implemented for equipment and vehicle maintenance:

- On-site vehicles and equipment will be inspected daily for leaks at startup. Any observed leaks will be repaired immediately.

- Vehicles will be repaired at an off-site repair shop unless on-site repairs are absolutely necessary (i.e., breakdown).

- If vehicles must be maintained on the site, then designated areas will be used that are at least 50 feet from surface waters, storm drains, and drainage swales. Maintenance and repairs will be performed on a hard surface, if available.

- Drip pans and plastic or absorbent pads will be used during vehicle and equipment maintenance that involves fluids, unless the maintenance work is performed over an impermeable surface in a dedicated maintenance area.

- Spill cleanup materials will be stockpiled where they are readily accessible. Any spilled material, including any contaminated soil, will be immediately cleaned up and properly disposed of.

- Vehicles and equipment will be kept clean to prevent excessive buildup of oil and grease.

- Liquid and solid wastes from equipment will be segregated and recycled. Secondary containment and covers will be established for these materials until maintenance wastes can be disposed of off site.

3.2.1.7 NS-12, Concrete Curing

Discharges of stormwater and non-stormwater exposed to concrete during curing may have a high pH and may contain chemicals, metals, and fines. Water used for concrete patching operations will be retained in the work area.

3.2.2 Waste and Materials Management

BMPs for materials management consist of implementing procedural and structural controls for handling, storing, and using construction materials to prevent the release of those materials into stormwater discharges. The amount and type of construction materials to be used at the sites will depend upon the type of construction and the length of the construction period. The materials may be used continuously, such as fuel

for vehicles and equipment, or the materials may be used for a discrete period, such as soil binders for temporary stabilization.

BMPs for waste management consist of implementing procedural and structural controls for handling, storing, and ensuring proper disposal of wastes to prevent the release of those wastes into stormwater discharges. BMPs for waste management will be implemented in accordance with the Waste Management Plan (WMP; Appendix F to the RAWP).

BMPs for materials and waste management control shall be implemented to minimize stormwater contact with construction materials, wastes, and service areas, and to prevent materials and wastes from being discharged off site. The following primary mechanisms for stormwater contact shall be addressed:

- Direct contact with precipitation
- Contact with stormwater run-on and runoff
- Wind dispersion of loose materials
- Direct discharge to the storm drain system through spills or dumping
- Extended contact with some materials and wastes, such as asphalt cold mix and treated wood products, which can leach pollutants into stormwater

Table 8 identifies the BMPs that shall be implemented to handle materials and control construction wastes associated with the RA at Parcel G. Appendix G provides the fact sheets for BMPs for materials and waste management. BMPs for material management shall be implemented in accordance with the following guidelines and in accordance with the BMP fact sheets provided in Appendix G. The following subsections provide additional guidance on implementation of BMPs for waste and materials management.

3.2.2.1 WM-1, Material Delivery and Storage

Material delivery and storage practices should reduce or eliminate the discharge of pollutants to stormwater from materials delivered and stored on site. Applicable materials will be delivered and stored in watertight containers and placed in a designated area away from traffic and waterways. The designated area will be a lined

and bermed area for secondary containment. Materials will be covered with plastic sheeting if no overhead structure is available. The following applicable materials will be delivered and stored on site properly:

- Soil stabilizers and binders
- Petroleum products such as fuel, oil, and grease
- Polylactate solution
- Asphalt and concrete components
- Hazardous chemicals (e.g., paint)
- Other materials that may be harmful if released to the environment

3.2.2.2 WM-2, Material Use

In accordance with the project's WMP (Appendix F to the RAWP), material use will be managed to prevent or reduce the discharge of pollutants to the storm drain system or watercourses. Whenever possible, alternative (less hazardous) products will be used, use of hazardous materials on site will be minimized, and employees and subcontractors will be trained to manage their materials properly.

3.2.2.3 WM-3, Stockpile Management

Stockpile management is designed to reduce air and stormwater pollution from stockpiles of construction debris (e.g., asphalt, concrete, rocks, etc.) and contaminated soil at Parcel G. BMPs that will be implemented include, but are not limited to:

- Using sheeting and sandbags to cover stockpiles at the end of each workday
- Implementing BMPs to control erosion around stockpiled materials
- Locating stockpiles away from known stormwater drainage courses

3.2.2.4 WM-4, Spill Prevention and Control

The following BMPs will be implemented for spill prevention and control:

- Site personnel, including subcontractors, will be trained in proper spill response procedures.

- If it is safe to do so, personnel will stop the source of a spill immediately.

Storm sewer inlets near refueling activities or other activities including the transfer of potentially hazardous materials will be covered when those activities are being performed. Spills of hazardous materials that cannot be cleaned up or that have

resulted in a release to surface waters or to a permeable surface will be immediately reported to the contractor's Project Manager, who will immediately report the release to the ROICC representative, the Navy CSO representative, the Navy RPM, and the appropriate authorities as required by state and federal law.

3.2.2.5 WM-5, Solid Waste Management

Nonhazardous wastes will be managed in accordance with federal and state solid waste regulations and the WMP (Appendix F to the RAWP). The following BMPs will be implemented to manage nonhazardous waste:

- Maintain the construction site in good order and free of litter and trash.
- Locate storage areas for nonhazardous debris and solid waste at least 50 feet from surface water, storm drains, and drainage swales.
- Store small construction debris in covered bins.

3.2.2.6 WM-6, Hazardous Waste Management

The use of any hazardous materials, except fuels, oil, and grease that will be managed very purposely, is not anticipated at the sites. Fuels will be stored in secured tanks on support vehicles or in secondarily contained drums or tanks only in designated areas, away from surface waters and storm drains. No contamination by hazardous materials is expected; however, if chemical contamination is encountered during the RA, work will be discontinued, and the ROICC and Navy RPM will be notified immediately so that the chemical contamination can be assessed and remediated appropriately.

Waste will be containerized and characterized in accordance with Title 22 of the CFR and will be properly managed and disposed of in accordance with federal and state local regulations.

3.2.2.7 WM-9, Sanitary and Septic Waste Management

The following BMPs will be implemented for sanitary and septic waste management (e.g., temporary sanitary facilities):

- Treat or dispose of sanitary or septic wastes weekly and in accordance with federal, state, and local requirements.

- Locate temporary sanitary facilities a minimum of 50 feet from surface waters, storm drains, and drainage swales.

- Drip pans will be used with portable sanitation facilities at all times.
- When subjected to high winds or risk of high winds, secure temporary sanitary facilities to prevent overturning.

3.2.2.8 WM-10, Liquid Waste Management

Management of liquid waste includes procedures and practices to prevent discharge of pollutants from Parcel G. Liquid waste will be containerized appropriately to prevent spills. Management of liquid waste is described further in the WMP (Appendix F of the RAWP).

3.3 Post-Construction Stormwater Management Measures

Post-construction BMPs are permanent measures installed during construction that are designed to reduce or eliminate pollutant discharges from the site after construction is completed. Vegetative cover or nonerodible covers (e.g., paving or road base) will be applied to all disturbed areas to return the site to pre-construction conditions.

4. BMP Inspection and Maintenance

Weekly inspections of BMPs are required, along with inspections before, during, and after qualifying rain events producing precipitation of 0.5 inch or more. A BMP inspection checklist must be filled out for inspections and maintained on site with the CERCLA Stormwater Plan. A blank inspection checklist can be found in Appendix H. Completed checklists will also be kept in Appendix H.

BMPs shall be maintained regularly to ensure proper and effective functionality. If necessary, corrective actions shall be implemented within 72 hours of identified deficiencies and associated amendments to the CERCLA Stormwater Plan shall be prepared by the QSD.

Specific details for maintenance, inspection, and repair of construction site BMPs can be found in the BMP fact sheets in Appendix G.

5. Training Documentation

A QSP shall implement all elements of the CERCLA Stormwater Plan. The QSP may delegate tasks to trained employees if adequate supervision and oversight is provided. Personnel at the site shall receive training appropriate for individual roles and

responsibilities on the project. Appropriate personnel shall receive training on CERCLA Stormwater Plan implementation, BMP inspection and maintenance, and recordkeeping.

Table 9 provides information about the training and experience of project personnel responsible for preparation and implementation of this plan. Additional documentation of formal and informal training required for project team members during implementation of the construction activities will be included in Appendix I and submitted as part of the Annual Report.

6. Responsible Parties

Table 10 lists the project site personnel who will be responsible for CERCLA Stormwater Plan activities, including the project QSD, QSP, and Project Manager.

7. Construction Site Monitoring Program

This section describes the Construction Site Monitoring Program (CSMP) developed in for this project.

7.1 Purpose

The purpose of this CSMP is to provide monitoring and sampling procedures, locations, forms, and checklists to ensure compliance with the Discharge Prohibitions of the General Permit. The procedures in this CSMP will assist the project QSP in determining whether:

- non-visible pollutants are present at the site and are causing or contributing to exceedances of water quality objectives;
- immediate corrective actions, additional BMP implementation, or plan revisions are necessary to reduce pollutants in stormwater discharges and authorized non-stormwater discharges; or
- BMPs included in this plan are effective in preventing or reducing pollutants in stormwater discharges and authorized non-stormwater discharges.

7.2 Visual Monitoring (Inspections)

A QSP, or appropriately trained employee, will perform or supervise all inspection, maintenance, repair, and sampling activities at the project sites. Inspections will be performed weekly and at least once each 24-hour period during extended storm events producing precipitation of 0.5 inch or more to identify and document BMPs that require maintenance to operate effectively, that have failed, or that could fail to operate as intended. If failures or deficiencies are identified, then repairs or design changes to BMPs will begin within 72 hours of identification and will be completed as soon as possible. Table 11 summarizes inspection and reporting requirements. Inspectors will complete an inspection checklist that will include the following information at a minimum:

- Inspection date and date the inspection report was written, if different.
- Weather information, including presence or absence of precipitation, estimated date and time of qualifying storm event, duration of event, time elapsed since last storm, and approximate amount of rainfall in inches.
- Site information, including stage of project, activities completed, and approximate area of disturbed soil.
- A description of any BMPs evaluated and any deficiencies noted.

List the following observations of all BMPs:

- If the construction site can be accessed safely, document erosion controls, sediment controls, chemical and waste controls, and non-stormwater controls.
- If the site cannot be accessed safely, then document the results of visual inspections at all relevant outfalls, discharge points, downstream locations, and any projected maintenance activities.
- Presence of odors or any visible sheen on any discharges.
- Corrective actions required, including any necessary changes to the CERCLA Stormwater Plan and the associated implementation dates.

- Photographs taken during the inspection, if any.
- Inspector's name, title, and signature.

7.2.1 Visual Inspection Requirements for Qualifying Rain Events

Stormwater discharges at all discharge locations will be inspected during business hours within 2 business days (48 hours) after each qualifying rain event producing precipitation of 0.5 inch or more.

Stored or contained stormwater that is derived from and discharged subsequent to a qualifying rain event will be inspected at the time of discharge. Stored or contained stormwater that will likely discharge after operating hours because of anticipated precipitation will be inspected during business hours prior to the discharge. The inspector will document the time, date, and rain gauge reading of all qualifying rain events.

The following items will be inspected within 2 business days (48 hours) prior to each qualifying rain event:

- Stormwater drainage areas to identify any spills, leaks, or uncontrolled pollutant sources. If needed, the discharger shall implement appropriate corrective actions.
- BMPs to identify whether they have been implemented properly in accordance with the CERCLA Stormwater Plan. If needed, the discharger shall implement appropriate corrective actions.
- Stormwater storage and containment areas to detect leaks and ensure maintenance of adequate freeboard.
- Visual monitoring (inspections) of stormwater drainage, storage, or containment areas to document the presence or absence of floating and suspended materials and any sheen, discolorations, turbidity, odors, and source(s) of any observed pollutants. Within 2 business days (48 hours) after each qualifying rain event, inspections will be conducted to identify whether (1) BMPs were adequately designed, implemented, and effective, and (2) additional BMPs are required and the CERCLA Stormwater Plan should be revised accordingly.

7.3 Non-Stormwater Discharge Monitoring

Each drainage area will be inspected for the presence of (or indications of prior) unauthorized and authorized non-stormwater discharges and their sources. One visual inspection for non-stormwater discharges will be conducted quarterly during each of the following periods: January–March, April–June, July–September, and October–December. Inspections will only be conducted during daylight hours (sunrise to sunset). Inspections will document the presence or evidence of any non-stormwater discharge (authorized or unauthorized), pollutant characteristics (floating and suspended material, sheen, discoloration, turbidity, odor, etc.), and source. Inspection logs will indicate the personnel performing the visual inspections, the dates and approximate time each drainage area and non-stormwater discharge was observed, and the response taken to eliminate unauthorized non-stormwater discharges and to reduce or prevent pollutants from contacting non-stormwater discharges.

7.4 Monitoring for Pollutants not Visually Detectable in Stormwater

Dischargers of stormwater associated with a breach, malfunction, leakage or spill shall collect samples and analyze them for pollutants that are not visually detectable in stormwater discharges, that are or should be known to occur on the construction site, and that could cause or contribute to exceeding water quality objectives in the receiving water (Appendix A).

Stormwater runoff from Parcel G is not likely to discharge to a water body; however, stormwater samples will be collected during any breach, malfunction, leakage, or spill observed during a visual inspection that could result in the discharge of pollutants to surface waters that would not be visually detectable. Samples will be collected at all discharge locations that can be accessed safely. All samples will be analyzed for pH, turbidity, total metals, and total petroleum hydrocarbons (TPH). For comparison purposes, an additional sample will be collected from stormwater that has not come in contact with disturbed soil or materials stored or used on site. The additional sample will be analyzed for pH, turbidity, total metals, and TPH. The ROICC and Navy RPM will be contacted after any significant discharge so they can coordinate with other contractors working on adjacent parcels to evaluate whether the discharge has or will reach the San Francisco Bay.

Monitoring of stormwater for non-visually detectable pollutants will be implemented if conditions or the scope of the RA change. Any such amendments will be documented

using the Amendment Summary Form that is provided as Appendix C of this plan. Any completed forms will be inserted into the plan, and copies will be placed in Appendix C.

7.4.1 Sampling and Analysis

Should there be a stormwater discharge from the site which could contain non-visible pollutants, samples will be collected.

Samples will be analyzed for pH, turbidity, total metals, and TPH. All analyses for storm water samples will be conducted in accordance with 40 CFR Part 136, unless other test procedures have been specified by the RWQCB. Analytical methods are presented in Table 12.

All analyses requiring laboratory anaylsis will be submitted to the following California state-certified laboratory:

TestAmerica – Pleasanton
120 Quarry Lane
Pleasanton, CA 94566
(925) 484-1919
Contact: Dimple Sharma

7.4.1.1 Stormwater Discharge Water Quality Sampling Locations

Stormwater samples will be representative of the flow and characteristics of the discharge associated with activity in the disturbed areas of the site. Stormwater effluent samples will be collected at all discharge points where storm water runs off site. Stormwater discharge samples will not be collected outside of scheduled site business hours or if dangerous weathers conditions (e.g., flooding and electrical storms) exist at the site.

7.4.1.2 Stormwater Sample Collection for Field Analysis

Stormwater can be analyzed for pH and turbidity in the field by trained personnel with appropriate equipment or test kits. Where possible, the water will be analyzed for pH and turbidity in place using instruments calibrated and maintained in accordance with manufacturers' specifications. Turbidity will be measurements will be conducted in accordance with either USEPA Method 180.1 or Standard Method 2130. If in-situ analysis is not possible, then samples of the stormwater will be collected and taken to

an on-site testing station. All field measurements will be documented in the site log book and kept on site.

7.4.1.3 Storm Water Sample Collection for Laboratory Analysis

Samples for laboratory analysis will be collected, maintained, and shipped in accordance with substantive provisions of the Surface Water Ambient Monitoring Program's 2008 Quality Assurance Program Plan. Stormwater samples will be collected in containers provided by the analytical testing laboratory, which will receive the samples within 48 hours of collection. Preparations for collecting samples of water will be made prior to the rainy season by contacting the laboratory in advance to obtain sampling containers, coolers, labels, and chain-of-custody forms that will be stored on site.

The following procedure shall be used for sampling from surface water sources:

- Visually inspect the water and complete an Inspection Form.
- Don a pair of clean gloves.
- Obtain the required sample container(s).
- If entering the water body, always do so with as little bottom disturbance as possible and wait for the water around the planned sampling area to return to its undisturbed state (clarity) before sampling.
- Collect each liquid sample by slowly submerging the sample container with minimal surface disturbance. If sampling in a stream or current, make sure the open end of the sample container is pointed upstream.
- Retrieve the container from the liquid with minimal disturbance; cap and wipe the outside of the container with a towel or cloth.
- Complete all required field documentation, enter the sample name onto a chain- of-custody form, and place the sample containers into a cooler or other specified container.
- If a pond sampler with reusable collection jar or breaker is used to collect sample surface water location samples, then the jar or breaker will be cleaned with liquinox

(or similar cleaner) and triple rinsed with deionized water prior to collecting a sample. An equipment rinse sample will be collected from the jar or beaker and submitted with the surface water samples to the laboratory.

7.4.1.4 Sample Handling and Custody

This subsection describes the requirements for sample containers, handling, custody, packaging, and shipping. Table 12 provides information on sample container type, volume, preservatives, and holding times.

Sample Containers

Storm water samples for laboratory analysis will be placed in containers supplied by the laboratory, as specified for each analytical method in Table 12.

Sample Handling

Approved site-specific personal protective equipment, such as gloves, will always be used when collecting a sample to prevent cross contamination from sample to sample and to ensure worker health and safety. A new pair of gloves will be used to collect and handle each sample to prevent sample-to-sample cross contamination. Samples will be securely placed in a cooler with water ice for delivery to the laboratory.

Sample Labeling

Each sample will be assigned a unique Sample Identification Number using the following designations:

- "XX" – Designator to indicate water type such as "RN" for run-on water, and "RF" for runoff water.
- "01" – Sequential number to indicate the location at the site. Each location will be documented on site maps prior to or during the sampling event.
- "013111" – Date the sample was collected.

The following sample identification number would indicate a runoff sample collected from location number 2 on February 19, 2012:

"RF-02-021912"

The sample collection date and time, requested analyses, client, and sampler will also be identified on the label.

Sample Custody

Each sample will be entered onto a chain-of-custody form and recorded in accordance with the laboratory for this project. Samples will be placed in shipping containers sealed with custody tape. Laboratory couriers receiving the shipping container will provide a signed sample receipt with a discrete individual number when they pick up samples at the site, transferring custody to the laboratory at that time. If a commercial carrier or courier is used, the laboratory will check the custody tape on each shipping container upon receipt to ensure that the shipping container has not been tampered with. After ensuring that the shipping container has not been tampered with, the laboratory representative will sign the chain-of-custody form, noting the time and date of receipt, and thereby assuming custody of the samples.

Sample Documentation

Field personnel will document sampling activities on the inspection forms. Samples will be documented on a sample tracking log kept on site. The tracking log will list the sample number, type, specific location, shipment date, the laboratory, and the parameters to be analyzed. Any discarded samples will be noted on the sample tracking log.

Sample Preservative

Stormwater samples will be preserved as noted in Table 12 prior to shipment to the laboratory. Shipping containers will be packed with double-bagged wet ice before shipment to ensure that the samples arrive at the laboratory chilled to 4°C ± 2°C. The ambient temperature of the sample shipping containers, when received at the laboratory, will be measured and recorded on the chain-of-custody form. Sample shipping containers received at the laboratory within 4 hours of sample collection and at less than or equal to 10°C will not be subject to normal temperature requirements.

Sample Packaging and Shipping

Samples will be packaged and shipped in accordance with the certified laboratory procedures. The sample container will be placed in a shipping container (typically a cooler) allowing sufficient room between the samples to place ice and packing material. The samples will be maintained under proper chain-of-custody documentation. The sample container will be tightly sealed, and custody tape placed around or over the top. The container will be inspected for integrity, and the drain plug sealed with tape.

7.4.1.5 Decontamination of Sampling Equipment

Dedicated sampling equipment will be used where possible to minimize decontamination requirements. Non-dedicated sampling equipment (i.e., core sampler, sleeves, etc.) will be decontaminated between sample locations by the following steps:

- Wash with Liquinox soap (or similar non-phosphate soap) and water
- Rinse with tap water
- Rinse with deionized water

7.5 Safety

Safety practices for inspections and sample collection will be conducted in accordance with the Site Safety and Health Plan and the Accident Prevention Plan (ARCADIS 2012), copies of which will be kept on site in the office trailer. A job Activity Hazard Analysis (AHA) form will be reviewed and updated prior to conducting an inspection or collecting samples. If previously unidentified conditions arise while conducting site activities, then the AHA will be modified or a new one will be completed prior to completing the site activities.

Field personnel are not required to conduct inspections or collect samples under the following conditions:

- During dangerous weather conditions such as flooding and electrical storms.
- Outside of scheduled site business hours (7 a.m. to 6 p.m., Monday through Friday).

If monitoring (inspections or sample collection) of the site is unsafe because of the dangerous conditions noted above, the QSP shall document the conditions on the relevant monitoring forms.

8. References

ARCADIS U.S., Inc. (ARCADIS). 2012. Accident Prevention Plan for Remedial Action in Parcel G, Hunters Point Naval Shipyard, San Francisco, California. July.

ARCADIS. 2012. Waste Management Plan for Remedial Action in Parcel G, Hunters Point Naval Shipyard, San Francisco, California. July.

ChaduxTt. 2010. Final Remedial Design Package, Parcel G, Hunters Point Shipyard, San Francisco, California. October.

Department of the Navy (Navy). 2006. Final Basewide Radiological Removal Action, Action Memorandum, Revision 2006, Hunters Point Shipyard, San Francisco, California. April 21.

Innovative Technical Solutions, Inc. (ITSI). 2011. Final Petroleum Hydrocarbon Site Closeout Report Parcels D-1, D-2, and G (Former Parcel D), Hunter Point Shipyard, San Francisco, California. January

National Oceanic and Atmospheric Administration. 2012. Precipitation Atlas 14, Volume 6, Version 2, Point Precipitation Frequency Estimates, San Francisco, California. http://hdsc.nws.noaa.gov/hdsc/pfds/pfds_printpage.html?lat=37.7228&lon=-122.3689&data=intensity&units=english&series=pds

Navy, 2009. Final Record of Decision for Parcel G, Hunters Point Shipyard, San Francisco, California. February 18.

Naval Sea Systems Command. 2004. Historical Radiological Assessment, Volume II, History of the Use of General Radioactive Materials 1939–2003. August.

State Water Resources Control Board (SWRCB). 2012. Impaired Water Bodies, 303(d) List. Webpage: http://www.waterboards.ca.gov/water_issues/programs/tmdl/integrated2010.shtml?wbid=CAR4033100020050918175233.

SulTech. 2007. Revised Final Feasibility Study for Parcel D, Hunters Point Shipyard, San Francisco, California. November 30.

SulTech. 2008. Final Feasibility Study Report for Parcel C, Hunters Point Shipyard, San Francisco, California. July 31.

Weatherunderground. 2012. Mean Annual Rainfall for San Francisco. http://www.wunderground.com/NORMS/DisplayNORMS.asp?AirportCode=KSFO&SafeCityName=San_Carlos&StateCode=CA&Units=none&IATA=SFO

ARCADIS

TABLES

Table 1
List of Changes to be Field Determined

Candidate Changes for Field Location or Determination by QSP[1]	Check Changes That Can Be Field Located or Field Determined by QSP	Potential Reason for Change
Increase quantity of an erosion or sediment control measure	X	Existing measures do not adequately control runoff or sediment
Relocate and add stockpiles or stored materials	X	Stockpiles may be located in an area of known ponding, additional materials may be required
Relocate or add toilets	X	Changes in personnel or location of project work
Relocate vehicle storage and/or fueling locations	X	Changes in location of project work, changes in haul route
Relocate areas for waste storage	X	Current location may interfere with planned work
Relocate water storage and/or water transfer location	X	Current location may interfere with planned work
Changes to access points (entrance/exits)	X	Current location may interfere with planned work on other parcels, traffic constraints
Change type of erosion or sediment control measure	X	Current type of control measure may not be adequately controlling erosion or sediment transport
Changes to location of erosion or sediment control	X	Control measure may not adequately control erosion or sediment transport in its current location

Minor changes to schedule or phases	X	Weather, interaction with work on adjacent parcels
Changes in construction materials	X	Supply limitations, schedule constraints

Notes:

1. = Any field changes not identified for field location or field determination by QSP must be approved by QSD

QSD = Qualified SWPPP Developer

QSP = Qualified SWPPP Professional

Table 2
Sediment Risk Level

Receiving Water Risk	Sediment Risk	
	Low	**Medium**
Low	Level 1	Level 2
High	Level 2	Level 3

Table 3
BMPs Selected for Erosion and Sediment Control

General Permit BMP Requirements	Selected BMPs	Implementation	Duration
Implement effective wind erosion control.	WE-1	Start of Construction	Entirety of project
Provide effective soil cover for inactive areas and finished slopes, open space, utility backfill, and completed lots.	EC-5 EC-16	Start of Construction	Entirety of project
Limit the use of plastic materials when more sustainable, environmentally friendly alternatives exist. Where plastic materials are deemed necessary, the QSD shall consider the use of plastic materials resistant to solar degradation.	WM-3	Start of Construction	Entirety of project
Establish and maintain effective perimeter controls and stabilize construction entrances and exits to sufficiently control erosion and sediment discharges from the site.	SE-1 SE-5 SE-7 SE-10 TC-1 TC-2 TC-3 WM-3	Prior of Construction	Entirety of project
Implement appropriate erosion control BMPs (runoff control and soil stabilization) in conjunction with sediment control BMPs for areas under active construction.	EC-1 EC-2 EC-5 EC-16 SE-1 SE-5	Start of Construction	Entirety of project
Apply linear sediment controls along the toe of the slope; face of the slope; and at the grade breaks of exposed slopes to comply with sheet flow lengths in accordance with General Permit.	SE-1 SE-5 SE-7	Prior of Construction	Entirety of project
Ensure that construction activity traffic to and from the	SE-7 TC-1	Start of	Entirety of project

General Permit BMP Requirements	Selected BMPs	Implementation	Duration
project is limited to entrances and exits that employ effective controls to prevent off-site tracking of sediment.	TC-2 TC-3	Construction	
Ensure that storm drain inlets and perimeter controls, runoff control BMPs, and pollutant controls at entrances and exits (e.g., tire wash-off locations) are maintained and protected from activities that reduce their effectiveness.	All BMPs	Prior to Construction	Entirety of project
Inspect on a daily basis immediate access roads. At a minimum daily (when necessary) and prior to a rain event. Remove sediment or other construction activity-related materials that are deposited on the roads (by vacuuming or sweeping).	TC-1 TC-2 TC-3 SE-7	Start of Construction	Entirety of project
Effectively manage run-on and runoff within the site, and runoff that discharges off the site.	EC-9 SE-8	Start of Construction	Entirety of project
Run-on from off site shall be directed away from disturbed areas or shall collectively be in compliance with the effluent limitation in the General Permit.	EC-9 SE-8	Start of Construction	Entirety of project
Control the air deposition of site materials and from site operations. Such particulates can include, but are not limited to, sediment, nutrients, trash, metals, bacteria, oil and grease, and organics.	WE-1	Start of Construction	Entirety of project

Notes:

BMPs = best management practices

QSD = Qualified SWPPP Developer

Table 4
BMPs for Temporary Erosion Control

BMP Name	Meets a Minimum Requirement(1)	BMP Used		If not used, state reason
		YES	NO	
EC-1, Scheduling	✓		✓	Durable cover is to be implemented as soon as possible
EC-2, Preservation of Existing Vegetation	✓		✓	*The site is to be paved with durable cover
EC-3, Hydraulic Mulch	✓(2)		✓	*
EC-4, Hydroseed	✓(2)		✓	*
EC-5, Soil Binders	✓(2)	✓		
EC-6, Straw Mulch	✓(2)		✓	*
EC-7, Geotextiles and Mats	✓(2)		✓	*
EC-8, Wood Mulching	✓(2)		✓	*
EC-9, Earth Dike and Drainage Swales	✓(2)	✓		
EC-10, Velocity Dissipation Devices		✓		
EC-11, Slope Drains			✓	There are no steep slopes.
EC-12, Stream Bank Stabilization			✓	There are no stream banks.
Compost Blankets	✓(2)		✓	*
Soil Preparation-Roughening			✓	*
Non-Vegetated Stabilization	✓(2)	✓		
WE-1, Wind Erosion Control	✓	✓		

Notes:

(1) = Applicability to a specific project shall be determined by the QSD.

(2) = The QSD shall ensure implementation of one of the minimum measures listed or a combination thereof to achieve and maintain the Risk Level requirements.

BMP = best management practice

QSD = Qualified SWPPP Developer

Table 5
BMPs for Temporary Sediment Control

BMP Name	Meets a Minimum Requirement[1]	BMP Used		If not used, state reason
		YES	NO	
SE-1, Silt Fence	✓	✓		
SE-2, Sediment Basin			✓	
SE-3, Sediment Trap			✓	
SE-4, Check Dams			✓	
SE-5, Fiber Rolls	✓[2][3]	✓		
SE-6, Gravel Bag Berm	✓[3]	✓		
SE-7, Street Sweeping	✓	✓		
SE-8, Sandbag Barrier		✓		
SE-9, Straw Bale Barrier			✓	
SE-10, Storm Drain Inlet Protection	✓RL2&3	✓		
Active Treatment System			✓	
Temporary Silt Dike	✓[3]		✓	
Compost Sock and Berm	✓[3]		✓	
Biofilter Bags	✓[3]		✓	
TR-1, Stabilized Construction Entrance and Exit	✓	✓		
TR-2, Stabilized Construction Roadway		✓		
TR-3, Entrance Outlet Tire Wash			✓	

Notes:

(1) = Applicability to a specific project shall be determined by the QSD.

(2) = The QSD shall ensure implementation of one of the minimum measures listed or a combination thereof to achieve and maintain the risk level requirements.

(3) = Risk Level 2 and 3 shall provide linear sediment control along toe of slope, face of slope, and at the grade breaks of exposed slope.

BMP = best management practice

QSD = Qualified SWPPP Developer

Table 6
BMPs Selected for Non-stormwater and Waste Management

General Permit BMP Requirements	Selected BMPs
Prevent disposal of rinse or wash waters or materials on impervious or pervious site surfaces or into the storm drain system.	NS-1, NS-8
Ensure the containment of sanitation facilities (e.g., portable toilets) to prevent discharges of pollutants to the stormwater drainage system or receiving water.	WM-9
Clean or replace sanitation facilities and inspect them regularly for leaks and spills.	WM-9
Cover waste disposal containers at the end of every business day and during a rain event.	WM-1 , WM-2, WM-4, WM-5, WM-6, WM-7
Prevent discharges from waste disposal containers to the stormwater drainage system or receiving water.	WM-1, WM-2, WM-4, WM-5, WM-6, WM-7, WM-9
Contain and securely protect stockpiled waste material from wind and rain at all times unless actively being used.	WM-3
Implement procedures that effectively address hazardous and nonhazardous spills.	WM-4
Develop a spill response and implementation element of the SWPPP prior to commencement of construction activities. The SWPPP shall require that equipment and materials for cleanup of spills shall be available on site, and that spills and leaks shall be cleaned up immediately and disposed of properly, and that appropriate spill response personnel are assigned and trained.	WM-4
Cover and berm loose stockpiled construction materials that are not actively being used (i.e., soil, spoils, aggregate, fly-ash, stucco, hydrated lime, etc.).	WM-3
Store chemicals in watertight containers (with appropriate secondary containment to prevent spillage or leakage) or in a storage shed (completely enclosed).	WM-1, WM-2
Minimize exposure of construction materials to precipitation.	WM-1, WM-2, WM-4, WM-5,

General Permit BMP Requirements	Selected BMPs
	WM-6, WM-7
Implement BMPs to prevent the off-site tracking of loose construction and landscape materials.	TC-1, TC-2, TC-3
Prevent oil, grease, or fuel from leaking into the ground, storm drains, or surface waters.	NS-9, NS-10
Place equipment or vehicles, which are to be fueled, maintained and stored in a designated area fitted with appropriate BMPs.	WM-2, WM-4, NS-9, NS-10
Clean leaks immediately and disposing of leaked materials properly.	WM-4
Implement measures to control non-stormwater discharges during construction.	NS-8, NS-9, NS-10, TC-1, TC-2, TC-3
Wash vehicles in such a manner as to prevent non-stormwater discharges to surface waters or MS4 drainage systems.	NS-8
Clean streets in such a manner as to prevent non-stormwater discharges from reaching surface water or MS4 drainage systems.	TC-1, TC-2, TC-3, SE-7

Notes:

BMP = best management practice

SWPPP = Stormwater Pollution Prevention Plan (the equivalent of this CERCLA Stormwater Plan)

Table 7
Temporary BMPs for Non-Stormwater

CASQA Fact Sheet	BMP Name	Meets a Minimum Requirement[1]	BMP Used		If not used, state reason
			YES	NO	
NS-1	Water Conservation Practices	✓	✓		
NS-2	Dewatering Operation			✓	
NS-3	Paving and Grinding Operation		✓		
NS-4	Temporary Stream Crossing			✓	
NS-5	Clear Water Diversion			✓	
NS-6	Illicit Connection-Illegal Discharge Connection	✓	✓		
NS-7	Potable Water Irrigation Discharge Detection			✓	
NS-8	Vehicle and Equipment Cleaning	✓	✓		
NS-9	Vehicle and Equipment Fueling	✓	✓		
NS-10	Vehicle and Equipment Maintenance	✓	✓		
NS-11	Pile Driving Operation			✓	
NS-12	Concrete Curing		✓		
NS-13	Concrete Finishing			✓	
NS-14	Material and Equipment Use Over Water			✓	
NS-15	Demolition Removal Adjacent			✓	

CASQA Fact Sheet	BMP Name	Meets a Minimum Requirement(1)	BMP Used		If not used, state reason
			YES	NO	
	to Water				
NS-16	Temporary Batch Plants			✓	
Alternate BMPs Used:			If used, state reason:		

Notes:

(1) = Applicability to a specific project shall be determined by the QSD.

CASQA = California Stormwater Quality Association

BMP = best management practice

QSD = Qualified SWPPP Developer

Table 8
BMPs for Temporary Materials Management

CASQA Fact Sheet	BMP Name	Meets a Minimum Requirement(1)	BMP Used		If not used, state reason
			YES	NO	
WM-01	Material Delivery and Storage	✓	✓		
WM-02	Material Use	✓	✓		
WM-03	Stockpile Management	✓	✓		
WM-04	Spill Preservation and Control	✓	✓		
WM-05	Solid Waste Management	✓	✓		
WM-06	Hazardous Waste Management	✓	✓		
WM-07	Contaminated Soil Management			✓	
WM-08	Concrete Waste Management	✓	✓		
WM-09	Sanitary-Septic Waste Management	✓	✓		
WM-10	Liquid Waste Management			✓	
Alternate BMPs Used:			If used, state reason:		

Notes:

(1) = Applicability to a specific project shall be determined by the QSD.

CASQA = California Stormwater Quality Association

BMP = best management practice

QSD = Qualified SWPPP Developer

Table 9
Training Documentation

Name	Role and Responsibility	Training
Hans Kramer, PE	CERCLA Stormwater Plan Development and Revision (QSD)	QSD/QSP Certified
Lucas Paz, PhD, CPESC	CERCLA Stormwater Plan Implementation (QSP)	QSD/QSP Certified

Notes:

QSD = Qualified SWPPP Developer

QSP = Qualified SWPPP Professional

Table 10
Project Site Personnel Responsible for CERCLA Stormwater Plan Activities

Role and Name	Company/Title	Phone Number
CERCLA Stormwater Plan Development and Revision Contact (QSD)		
Hans Kramer, P.E.	ARCADIS Principal Civil Engineer	510-596-9660
CERCLA Stormwater Plan Implementation and Inspection Contact (QSP)		
Lucas Paz, PhD, CPESC	ARCADIS Principal Hydrologist	510-596-9664
Project Manager		
Scott Morris, P.E.	ARCADIS Principal Civil Engineer	619-291-7800 (21)
Remedial Project Manager		
Hamide Kayaci	Navy	619-532-0930
Resident Officer in Charge of Construction		
Shirley Ng	Navy	510-521-8713 (office) 510-755-5878 (mobile) 510-755-5875 (mobile)
Contracting Officer (Approved Signatory)		
Cynthia Mafara	Navy	619-532-0787

Notes:

ARCADIS = ARCADIS U.S., Inc.

Navy = Department of the Navy

QSD = Qualified SWPPP Developer

QSP = Qualified SWPPP Professional

SWPPP = Stormwater Pollution Prevention Plan

Table 11
Risk Level 1 Inspection, Sampling, and Reporting Requirements

Plan Requirement	Precipitation Requirement	Comments
Visual Inspections		
Weekly	Not applicable	Inspect BMPs once per week.
Pre-Storm		
Baseline	>50% chance	One inspection of BMPs prior to event.
Daily Storm BMP	During	BMPs are inspected once per 24 hours of a qualifying event.
Post-Storm BMP	Within 48 after	One inspection of BMPs after qualifying event.
Reports		
Quarterly Non-Stormwater Discharge Report	Not applicable	
Annual Report	Not applicable	

Notes:

Inspections and sampling do not occur outside regular site business hours and when site conditions are unsafe because of storm events.

"Qualifying event" = >0.5 inches of rain

BMP = best management practice

SWPPP = Stormwater Pollution Prevention Plan

Table 12
Summary of Analytes

Analytes	Analytical Methods	Sample Container	Preservation	Holding Time	Reporting Limit
Turbidity	USEPA Method 180.1 (Conducted in the field)	Plastic or glass bottle if collected	NA	48 hours	0.1 NTU
pH	USEPA 9045C (Conducted in the field)	Plastic or glass bottle if collected	NA	Immediate	0.1
Total Metals	USEPA 6010B/7470A	250 ml Plastic bottle	4°C±2°C HNO_3	6 months	0.1 µg/L
Total Petroleum Hydrocarbons	EPA 8015B	1-L glass bottle	NA	14 days	300 µg/L

Notes:

USEPA = United States Environmental Protection Agency

µg/L = micrograms per liter

ml = milliliter

NA = not applicable

NTU = Nephelometric Turbidity Units

°C =degree Celsius

ARCADIS

FIGURES

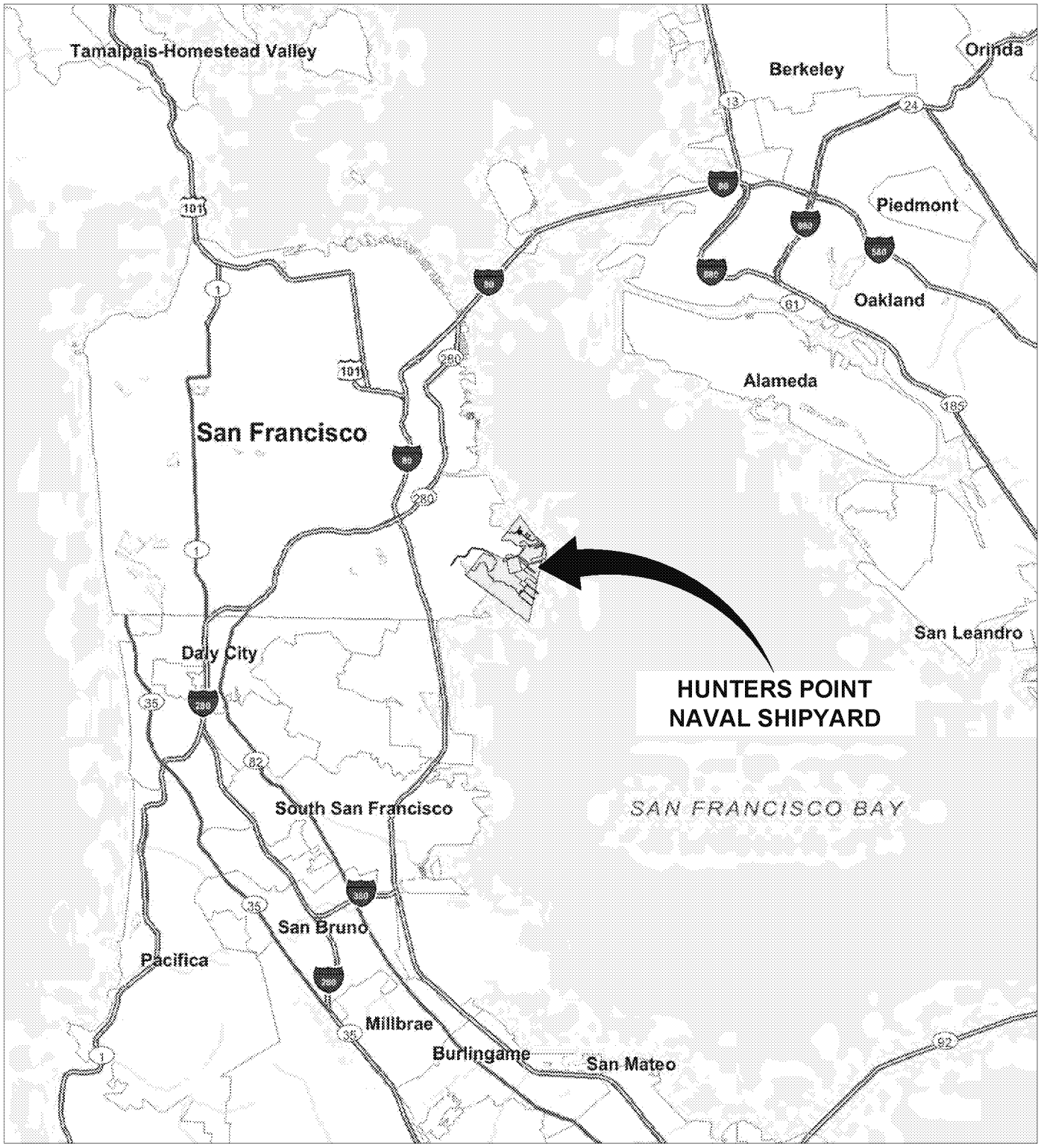

REFERENCE: ESRI DATA LIBRARY

0 7000' 14000'
Approximate Scale in Feet

NAVY BASE REALIGNMENT AND CLOSURE PROGRAM
SAN FRANCISCO, CALIFORNIA

PARCEL G, HUNTERS POINT NAVAL SHIPYARD
CERCLA STORMWATER PLAN

SITE LOCATION MAP

ARCADIS

FIGURE
1

CITY:(Reqd) DIV/GROUP:(Reqd) DB:(Reqd) LD:(Opt) PIC:(Opt) PM:(Reqd) TM:(Opt) LYR:(Opt)ON=*;OFF=*REF*
G:\Projects\CA000776\Design\Figs\Figures\SWPPP Figure 1.dwg LAYOUT: 1 SAVED: 11/16/2012 9:42 AM ACADVER: 18.1S (LMS TECH) PAGESETUP: ---- PLOTSTYLETABLE: ---- PLOTTED: 11/16/2012 9:44 AM BY: OBERBAUER, PAUL

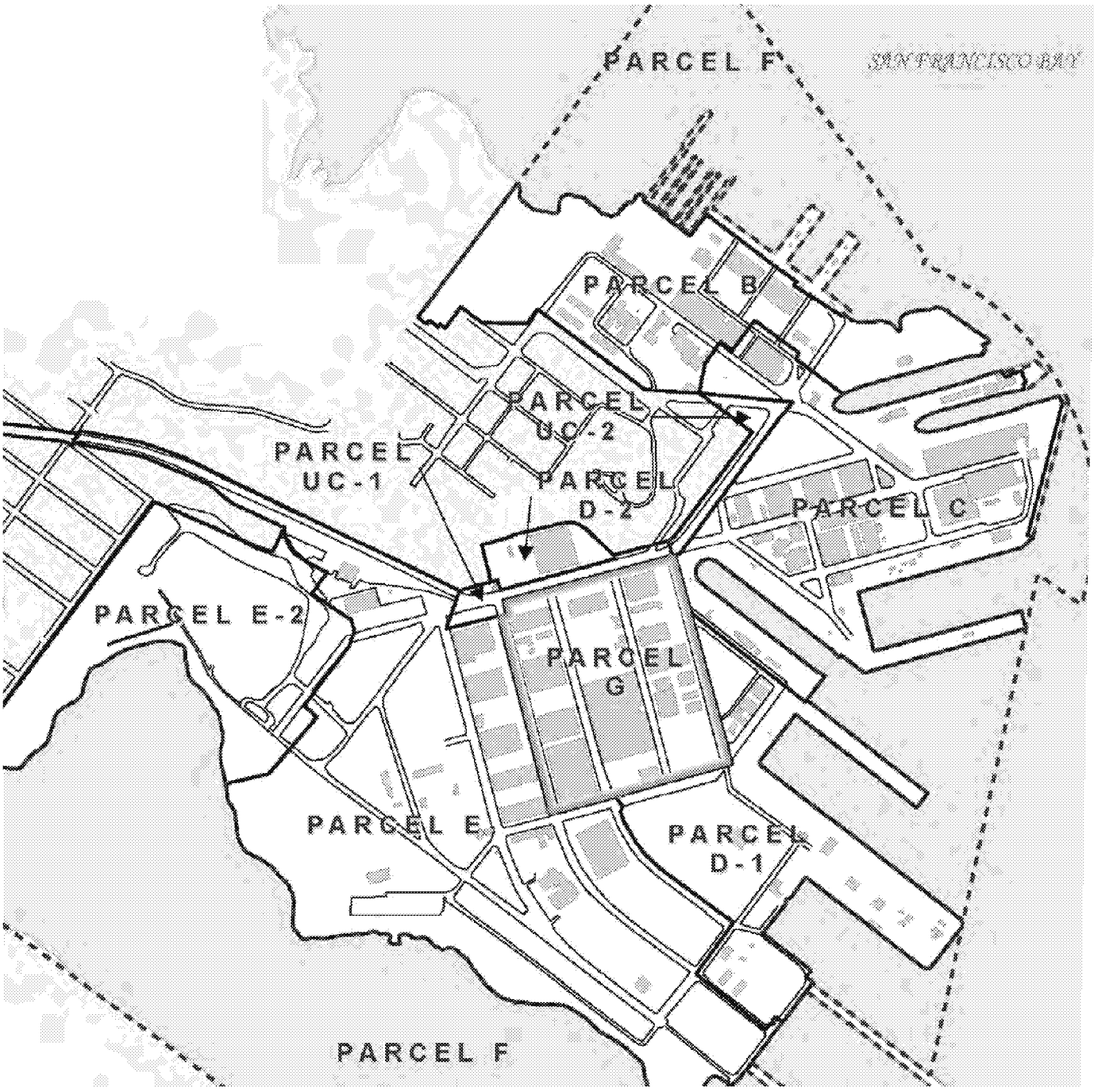

Parcel Boundary
Parcel G Boundary
Parcel F Boundary
Building
Non-Navy Property
Road

0 1,000'

NAVY BASE REALIGNMENT AND CLOSURE PROGRAM
SAN FRANCISCO, CALIFORNIA

HUNTERS POINT NAVAL SHIPYARD - PARCEL G
CERCLA STORMWATER PLAN

HUNTERS POINT MAP

ARCADIS

FIGURE
2

CITY:(Reqd) DIV/GROUP:(Reqd) DB:(Reqd) LD:(Opt) PIC:(Opt) PM:(Reqd) TM:(Opt) LYR:(Opt)ON=*;OFF=*REF*
G:\Projects\CA000776\Design\Figs\Figures\SWPPP Figure 2.dwg LAYOUT: SWPPP2 SAVED: 11/16/2012 9:43 AM ACADVER: 18.1S (LMS TECH) PAGESETUP: ARCADIS ANSI A PLOTSTYLETABLE: ---- PLOTTED: 11/16/2012 9:44 AM BY: OBERBAUER, PAUL
XREFS: PROJECTNAME: ---

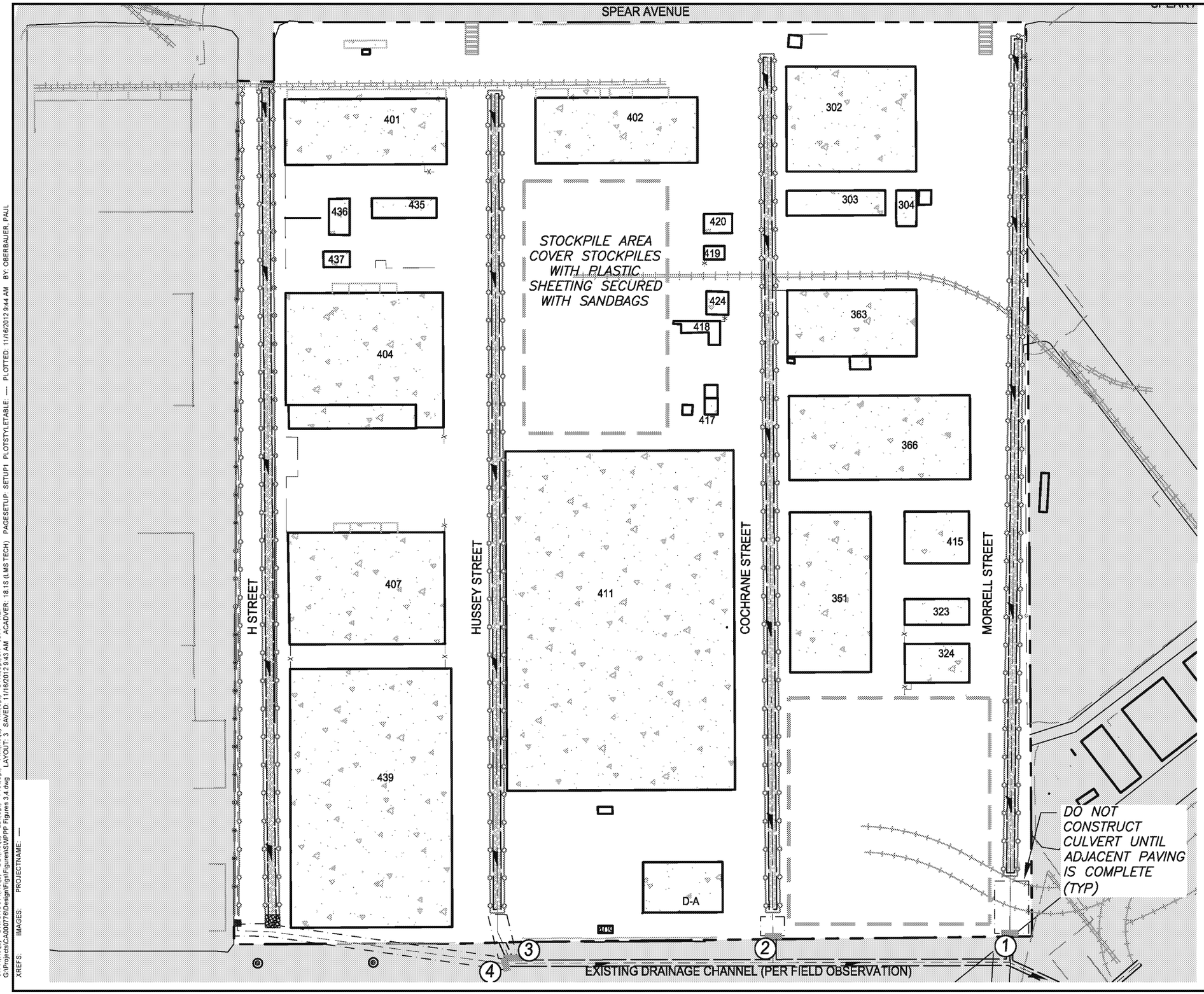

LEGEND

- PARCEL G BOUNDARY
- EXISTING DRAINAGE SWALE WITH FLOW DIRECTION
- EXISTING RAILROAD TRACKS
- 411 EXISTING BUILDING PAD AND FORMER BUILDING NUMBER
- PROP FIBER ROLL (SE-5)
- PROP SILT FENCE (SE-1) PER DETAIL 1
- PROP DRY WEATHER PLUG (SE-10)
- TEMPORARY STOCKPILE AREA REQUIRING FIBER ROLL FOR STOCKPILE MANAGEMENT (WM-3)
- STABILIZED CONSTRUCTION EXIT (RUMBLE STRIPS TC-1)
- 1 SAMPLING LOCATIONS
- PROTECTED EXISTING OPERATIONAL STORM DRAIN INLET

0 150' 300'
GRAPHICAL SCALE

NAVAL BASE REALIGNMENT AND CLOSURE PROGRAM
SAN FRANCISCO, CALIFORNIA
HUNTERS POINT NAVAL SHIPYARD PARCEL G
CERCLA STORMWATER PLAN

SWPPP BMPS FOR PARCEL G
PHASE 1

ARCADIS

FIGURE
3

CITY:(Reqd) DIV/GROUP:(Reqd) DB:(Reqd) LD:(Opt) PIC:(Opt) PM:(Reqd) TIM:(Opt) LYR:(Opt)ON=*;OFF=REF*
G:\Projects\CA000776\Design\Figs\Figures\SWPPP Figures 3,4.dwg LAYOUT: 3 SAVED: 11/16/2012 9:43 AM ACADVER: 18.1S (LMS TECH) PAGESETUP: SETUP1 PLOTSTYLETABLE: --- PLOTTED: 11/16/2012 9:44 AM BY: OBERBAUER, PAUL
XREFS: IMAGES: PROJECTNAME: ---

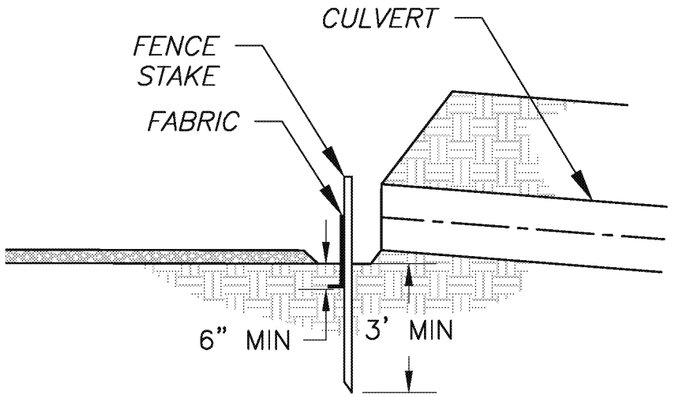

PROFILE VIEW

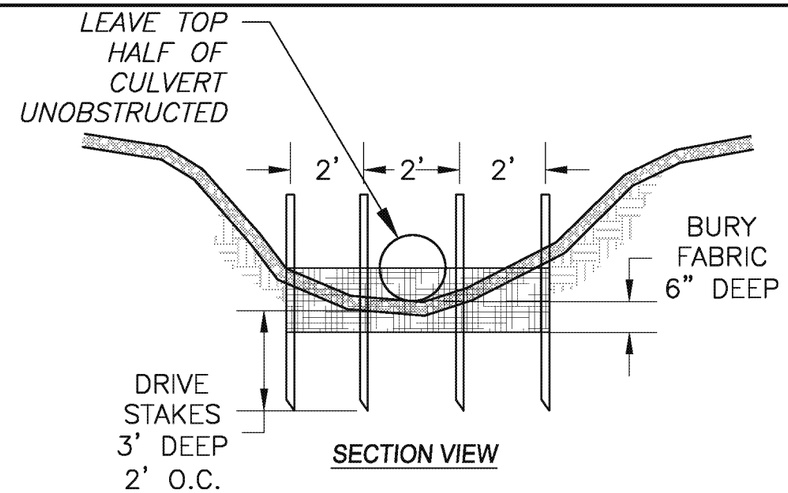

SECTION VIEW

1 CULVERT SILT FENCE DETAIL

NTS

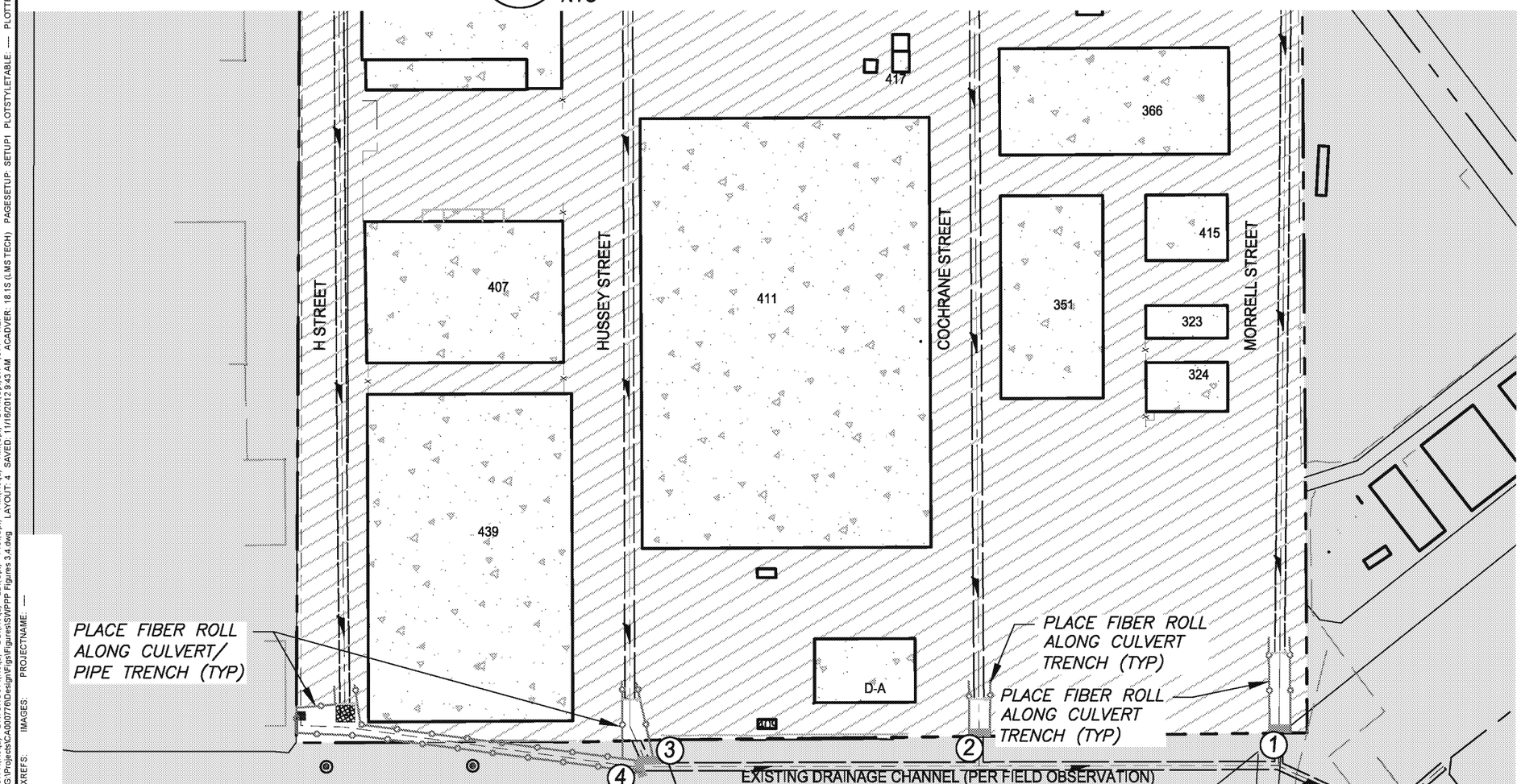

LEGEND

- PARCEL G BOUNDARY
- EXISTING DRAINAGE SWALE WITH FLOW DIRECTION
- EXISTING RAILROAD TRACKS
- 411 — EXISTING BUILDING PAD AND FORMER BUILDING NUMBER
- PROP FIBER ROLL (SE-5)
- PROP SILT FENCE (SE-1) PER DETAIL 1
- PROP DRY WEATHER PLUG (SE-10)
- TEMPORARY STOCKPILE AREA REQUIRING FIBER ROLL FOR STOCKPILE MANAGEMENT (WM-3)
- STABILIZED CONSTRUCTION EXIT (RUMBLE STRIPS TC-1)
- 1 — SAMPLING LOCATIONS
- PROTECTED EXISTING OPERATIONAL STORM DRAIN INLET

NOTE:

1. SAMPLE RUNOFF IMMEDIATELY PRIOR TO CROSSING THE PROPERTLY LINE OR ENTERING INLET.
2. KEEP EQUIPMENT ON PAVED OR GRAVELED AREAS OFF OF SOIL TO PREVENT TRACKOUT OF SOILS.

0 150' 300'

GRAPHICAL SCALE

NAVAL BASE REALIGNMENT AND CLOSURE PROGRAM
SAN FRANCISCO, CALIFORNIA
HUNTERS POINT NAVAL SHIPYARD PARCEL G
CERCLA STORMWATER PLAN

SWPPP BMPS FOR PARCEL G PHASE 2

ARCADIS

FIGURE **4**

CITY:(Reqd) DIV/GROUP:(Reqd) DB:(Reqd) LD:(Opt) PIC:(Opt) PM:(Reqd) TM:(Opt) LYR:(Opt)ON=*;OFF=REF*
G:\Projects\CAD\0776\Design\Figs\Figures\SWPPP Figures 3.4.dwg LAYOUT: 4 SAVED: 11/16/2012 9:43 AM ACADVER: 18.1S (LMS TECH) PAGESETUP: SETUP1 PLOTSTYLETABLE: ---- PLOTTED: 11/16/2012 9:45 AM BY: OBERBAUER, PAUL
XREFS: IMAGES: PROJECTNAME: ----

ARCADIS

Appendix A

General Permit
(Available on CD only)

State Water Resources Control Board
Division of Water Quality
1001 I Street • Sacramento, California 95814 • (916) 341-5455
Mailing Address: P.O. Box 100 • Sacramento, California • 95812-0100
Fax (916) 341-5463 • http://www.waterboards.ca.gov

Linda S. Adams
Secretary for
Environmental Protection

Arnold Schwarzenegger
Governor

CONSTRUCTION GENERAL PERMIT FACT SHEET TABLE OF CONTENTS

I. BACKGROUND 1

A. History 1

B. Legal Challenges and Court Decisions 1

C. Blue Ribbon Panel of Experts and Feasibility of Numeric Effluent Limitations 3

D. Summary of Panel Findings on Construction Activities 4

E. How the Panel's Findings are Used in this General Permit 5

F. Summary of Significant Changes in This General Permit 5

II. RATIONALE 7

A. General Permit Approach 7

B. Construction Activities Covered 7

C. Construction Activities Not Covered 9

D. Obtaining and Terminating Permit Coverage 11

E. Discharge Prohibitions 12

F. Effluent Standards for All Types of Discharges 13

G. Receiving Water Limitations 20

H. Training Qualifications and Requirements 21

I. Sampling, Monitoring, Reporting and Record Keeping 21

J. Risk Determination 28

K. ATS Requirements 36

L. Post-Construction Requirements 37

M. Storm Water Pollution Prevention Plans 45

N. Regional Water Board Authorities 47

ED_002781A_00003896-00532

LIST OF TABLES

Table 1 - Regional Water Board Basin Plans, Water Quality Objectives for Turbidity 15
Table 2 - Results of Ecoregion Analysis 16
Table 3 – ACL Sampling Data taken by Regional Water Board Staff..... 17
Table 4 - Required Monitoring Elements for Risk Levels..... 21
Table 5 - Storm Water Effluent Monitoring Requirements by Risk Level 23
Table 6 - Receiving Water Monitoring Requirements 26
Table 7 - Combined Risk Level Matrix..... 30
Table 8 -National Oceanic and Atmospheric Administration (NOAA) Definition of Probability of Precipitation (PoP) 32
Table 9 - Qualified SWPPP Developer/ Qualified SWPPP Practitioner Certification Criteria..... 46

LIST OF FIGURES

Figure 1 -Statewide Map of K * LS..... 29
Figure 2 - Suite of Storm Events..... 38
Figure 3 - Northern CA (2009) Counties / Cities With SUSMP-Plus Coverage..... 39
Figure 4 - Southern CA (2009) Counties / Cities With SUSMP-Plus Coverage 40
Figure 5 - Schematic of the Lane Relationship..... 42
Figure 6 - Channel Changes Associated with Urbanization 43

ED_002781A_00003896-00533

I. BACKGROUND

A. History

In 1972, the Federal Water Pollution Control Act (also referred to as the Clean Water Act [CWA]) was amended to provide that the discharge of pollutants to waters of the United States from any point source is unlawful unless the discharge is in compliance with a National Pollutant Discharge Elimination System (NPDES) permit. The 1987 amendments to the CWA added Section 402(p), which establishes a framework for regulating municipal and industrial storm water discharges under the NPDES Program. On November 16, 1990, the U.S. Environmental Protection Agency (USEPA) published final regulations that established storm water permit application requirements for specified categories of industries. The regulations provide that discharges of storm water to waters of the United States from construction projects that encompass five or more acres of soil disturbance are effectively prohibited unless the discharge is in compliance with an NPDES Permit. Regulations (Phase II Rule) that became final on December 8, 1999 lowered the permitting threshold from five acres to one acre.

While federal regulations allow two permitting options for storm water discharges (Individual Permits and General Permits), the State Water Board has elected to adopt only one statewide General Permit at this time that will apply to most storm water discharges associated with construction activity.

On August 19, 1999, the State Water Board reissued the General Construction Storm Water Permit (Water Quality Order 99-08-DWQ). On December 8, 1999 the State Water Board amended Order 99-08-DWQ to apply to sites as small as one acre.

The General Permit accompanying this fact sheet regulates storm water runoff from construction sites. Regulating many storm water discharges under one permit will greatly reduce the administrative burden associated with permitting individual storm water discharges. To obtain coverage under this General Permit, dischargers shall electronically file the Permit Registration Documents (PRDs), which includes a Notice of Intent (NOI), Storm Water Pollution Prevention Plan (SWPPP), and other compliance related documents required by this General Permit and mail the appropriate permit fee to the State Water Board. It is expected that as the storm water program develops, the Regional Water Quality Control Boards (Regional Water Boards) may issue General Permits or Individual Permits containing more specific permit provisions. When this occurs, this General Permit will no longer regulate those dischargers.

B. Legal Challenges and Court Decisions

1. Early Court Decisions

Shortly after the passage of the CWA, the USEPA promulgated regulations exempting most storm water discharges from the NPDES permit requirements. (See 40 C.F.R. § 125.4 (1975); see also *Natural Resources Defense Council v. Costle* (D.C. Cir. 1977) 568 F.2d 1369, 1372 (*Costle*); *Defenders of Wildlife v. Browner* (9th Cir. 1999) 191 F.3d 1159, 1163 (*Defenders of Wildlife*).) When environmental groups challenged this exemption in federal court, the District of Columbia Court of Appeals invalidated the regulation, holding that the USEPA "does not have authority to exempt categories of point sources from the permit requirements of [CWA] § 402." (*Costle*, 568 F.2d at 1377.) The *Costle* court rejected the USEPA's argument that effluent-based storm sewer regulation was administratively infeasible because of the variable nature of storm water pollution and the number of affected storm sewers throughout the country. (*Id.* at 1377-82.) Although the court acknowledged the practical problems relating to storm sewer regulation, the court found the USEPA had the flexibility under the CWA to design regulations that would overcome these problems. (*Id.* at 1379-83.) In particular, the court pointed to general permits and permits based on requiring best management practices (BMPs).

ED_002781A_00003896-00534

During the next 15 years, the USEPA made numerous attempts to reconcile the statutory requirement of point source regulation with the practical problem of regulating possibly millions of diverse point source discharges of storm water. (See *Defenders of Wildlife*, 191 F.3d at 1163; see also Gallagher, Clean Water Act in Environmental Law Handbook (Sullivan, edit., 2003)
p. 300 (Environmental Law Handbook); Eisen, *Toward a Sustainable Urbanism: Lessons from Federal Regulation of Urban Storm Water Runoff* (1995) 48 Wash. U.J. Urb. & Contemp. L.1, 40-41 [Regulation of Urban Storm Water Runoff].)

In 1987, Congress amended the CWA to require NPDES permits for storm water discharges. (See CWA § 402(p), 33 U.S.C. § 1342(p); *Defenders of Wildlife,* 191 F.3d at 1163; *Natural Resources Defense Council v. USEPA* (9th Cir. 1992) 966 F.2d 1292, 1296.) In these amendments, enacted as part of the Water Quality Act of 1987, Congress distinguished between industrial and municipal storm water discharges. With respect to industrial storm water discharges, Congress provided that NPDES permits "shall meet all applicable provisions of this section and section 1311 [requiring the USEPA to establish effluent limitations under specific timetables]." (CWA § 402(p)(3)(A), 33 U.S.C. § 1342(p)(3)(A); see also *Defenders of Wildlife,* 191 F.3d at 1163-64.)

In 1990, USEPA adopted regulations specifying what activities were considered "industrial" and thus required discharges of storm water associated with those activities to obtain coverage under NPDES permits. (55 Fed. Reg. 47,990 (1990); 40 C.F.R. § 122.26(b)(14).) Construction activities, deemed a subset of the industrial activities category, must also be regulated by an NPDES permit. (40 C.F.R. § 122.26(b)(14)(x)). In 1999, USEPA issued regulations for "Phase II" of storm water regulation, which required most small construction sites (1-5 acres) to be regulated under the NPDES program. (64 Fed. Reg. 68,722; 40 C.F.R. § 122.26(b)(15)(i).)

2. Court Decisions on Public Participation

Two recent federal court opinions have vacated USEPA rules that denied meaningful public review of NPDES permit conditions. On January 14, 2003, the Ninth Circuit Court of Appeals held that certain aspects of USEPA's Phase II regulations governing MS4s were invalid primarily because the general permit did not contain express requirements for public participation. (*Environmental Defense Center v. USEPA* (9th Cir. 2003) 344 F.3d 832.) Specifically, the court determined that applications for general permit coverage (including the Notice of Intent (NOI) and Storm Water Management Program (SWMP)) must be made available to the public, the applications must be reviewed and determined to meet the applicable standard by the permitting authority before coverage commences, and there must be a process to accommodate public hearings. (*Id.* at 852-54.) Similarly, on February 28, 2005, the Second Circuit Court of Appeals held that the USEPA's confined animal feeding operation (CAFO) rule violated the CWA because it allowed dischargers to write their own nutrient management plans without public review. (*Waterkeeper Alliance v. USEPA* (2d Cir. 2005) 399 F.3d 486.) Although neither decision involved the issuance of construction storm water permits, the State Water Board's Office of Chief Counsel has recommended that the new General Permit address the courts' rulings where feasible[1].

---

[1] In *Texas Independent Producers and Royalty Owners Assn. v. USEPA* (7th Cir. 2005) 410 F.3d 964, the Seventh Circuit Court of Appeals held that the USEPA's construction general permit was not required to provide the public with the opportunity for a public hearing on the Notice of Intent or Storm Water Pollution Prevention Plan. The Seventh Circuit briefly discussed why it agreed with the Ninth Circuit's dissent in *Environmental Defense Center*, but generally did not discuss the substantive holdings in *Environmental Defense Center* and *Waterkeeper Alliance*, because neither court addressed the initial question of whether the plaintiffs had standing to challenge the permits at issue. However, notwithstanding the Seventh Circuit's decision, it is not binding or controlling on the State Water Board because California is located within the Ninth Circuit.

ED_002781A_00003896-00535

The CWA and the USEPA's regulations provide states with the discretion to formulate permit terms, including specifying best management practices (BMPs), to achieve strict compliance with federal technology-based and water quality-based standards. (*Natural Resources Defense Council v. USEPA* (9th Cir. 1992) 966 F.2d 1292, 1308.) Accordingly, this General Permit has developed specific BMPs as well as numeric action levels (NALs) and numeric effluent limitations (NELs) in order to achieve these minimum federal standards. In addition, the General Permit requires a SWPPP and REAP (another dynamic, site-specific plan) to be developed but has removed all language requiring the discharger to implement these plans – instead, the discharger is required to comply with specific requirements. By requiring the dischargers to implement these specific BMPs, NALs, and NELs, this General Permit ensures that the dischargers do not "write their own permits." As a result this General Permit does not require each discharger's SWPPP and REAP to be reviewed and approved by the Regional Water Boards.

This General Permit also requires dischargers to electronically file all permit-related compliance documents. These documents include, but are not limited to, NOIs, SWPPPs, annual reports, Notice of Terminations (NOTs), and numeric action level (NAL) exceedance reports. Electronically submitted compliance information is immediately available to the public, as well as the Regional Water Quality Control Board (Regional Water Board) offices, via the Internet. In addition, this General Permit enables public review and hearings on permit applications when appropriate. Under this General Permit, the public clearly has a meaningful opportunity to participate in the permitting process.

C. Blue Ribbon Panel of Experts and Feasibility of Numeric Effluent Limitations

In 2005 and 2006, the State Water Board convened an expert panel (panel) to address the feasibility of numeric effluent limitations (NELs) in California's storm water permits. Specifically, the panel was asked to address:

"Is it technically feasible to establish numeric effluent limitations, or some other quantifiable limit, for inclusion in storm water permits? How would such limitations or criteria be established, and what information and data would be required?"

"The answers should address industrial general permits, construction general permits, and area-wide municipal permits. The answers should also address both technology-based limitations or criteria and water quality-based limitations or criteria. In evaluating establishment of any objective criteria, the panel should address all of the following:

The ability of the State Water Board to establish appropriate objective limitations or criteria;

How compliance determinations would be made;

The ability of dischargers and inspectors to monitor for compliance; and

The technical and financial ability of dischargers to comply with the limitations or criteria."

Through a series of public participation processes (State Water Board meetings, State Water Board workshops, and the solicitation of written comments), a number of water quality, public process and overall program effectiveness problems were identified. Some of these problems are addressed through this General Permit.

ED_002781A_00003896-00536

D. Summary of Panel Findings on Construction Activities

The panel's final report can be downloaded and viewed through links at www.waterboards.ca.gov or by clicking here[2].

The panel made the following observations:

"Limited field studies indicate that traditional erosion and sediment controls are highly variable in performance, resulting in highly variable turbidity levels in the site discharge."

"Site-to-site variability in runoff turbidity from undeveloped sites can also be quite large in many areas of California, particularly in more arid regions with less natural vegetative cover and steep slopes."

"Active treatment technologies involving the use of polymers with relatively large storage systems now exist that can provide much more consistent and very low discharge turbidity. However, these technologies have as yet only been applied to larger construction sites, generally five acres or greater. Furthermore, toxicity has been observed at some locations, although at the vast majority of sites, toxicity has not occurred. There is also the potential for an accidental large release of such chemicals with their use."

"To date most of the construction permits have focused on TSS and turbidity, but have not addressed other, potentially significant pollutants such as phosphorus and an assortment of chemicals used at construction sites."

"Currently, there is no required training or certification program for contractors, preparers of soil erosion and sediment control Storm Water Pollution Prevention Plans, or field inspectors."

"The quality of storm water discharges from construction sites that effectively employ BMPs likely varies due to site conditions such as climate, soil, and topography."

"The States of Oregon and Washington have recently adopted similar concepts to the Action Levels described earlier."

In addition, the panel made the following conclusions:

"It is the consensus of the Panel that active treatment technologies make Numeric Limits technically feasible for pollutants commonly associated with storm water discharges from construction sites (e.g. TSS and turbidity) for larger construction sites. Technical practicalities and cost-effectiveness may make these technologies less feasible for smaller sites, including small drainages within a larger site, as these technologies have seen limited use at small construction sites. If chemical addition is not permitted, then Numeric Limits are not likely feasible."

"The Board should consider Numeric Limits or Action Levels for other pollutants of relevance to construction sites, but in particular pH. It is of particular concern where fresh concrete or wash water from cement mixers/equipment is exposed to storm water."

"The Board should consider the phased implementation of Numeric Limits and Action Levels, commensurate with the capacity of the dischargers and support industry to respond."

---

[2] http://www.waterboards.ca.gov/stormwtr/docs/numeric/swpanel_final_report.pdf

ED_002781A_00003896-00537

E. How the Panel's Findings are Used in this General Permit

The State Water Board carefully considered the findings of the panel and related public comments. The State Water Board also reviewed and considered the comments regarding statewide storm water policy and the reissuance of the Industrial General Permit. From the input received the State Water Board identified some permit and program performance gaps that are addressed in this General Permit. The Summary of Significant Changes (below) in this General Permit are a direct result of this process.

F. Summary of Significant Changes in This General Permit

The State Water Board has significant changes to Order 99-08-DWQ. This General Permit differs from Order 99-08-DWQ in the following significant ways:

Rainfall Erosivity Waiver: this General Permit includes the option allowing a small construction site (>1 and <5 acres) to self-certify if the rainfall erosivity value (R value) for their site's given location and time frame compute to be less than or equal to 5.

Technology-Based Numeric Action Levels: this General Permit includes NALs for pH and turbidity.

Technology-Based Numeric Effluent Limitations: this General Permit contains daily average NELs for pH during any construction phase where there is a high risk of pH discharge and daily average NELs turbidity for all discharges in Risk Level 3. The daily average NEL for turbidity is set at 500 NTU to represent the minimum technology that sites need to employ (to meet the traditional Best Available Technology Economically Achievable (BAT)/ Best Conventional Pollutant Control Technology (BCT) standard) and the traditional, numeric receiving water limitations for turbidity.

Risk-Based Permitting Approach: this General Permit establishes three levels of risk possible for a construction site. Risk is calculated in two parts: 1) Project Sediment Risk, and 2) Receiving Water Risk.

Minimum Requirements Specified: this General Permit imposes more minimum BMPs and requirements that were previously only required as elements of the SWPPP or were suggested by guidance.

Project Site Soil Characteristics Monitoring and Reporting: this General Permit provides the option for dischargers to monitor and report the soil characteristics at their project location. The primary purpose of this requirement is to provide better risk determination and eventually better program evaluation.

Effluent Monitoring and Reporting: this General Permit requires effluent monitoring and reporting for pH and turbidity in storm water discharges. The purpose of this monitoring is to determine compliance with the NELs and evaluate whether NALs included in this General Permit are exceeded.

Receiving Water Monitoring and Reporting: this General Permit requires some Risk Level 3 dischargers to monitor receiving waters and conduct bioassessments.

Post-Construction Storm Water Performance Standards: this General Permit specifies runoff reduction requirements for all sites not covered by a Phase I or Phase II MS4 NPDES permit, to avoid, minimize and/or mitigate post-construction storm water runoff impacts.

Rain Event Action Plan: this General Permit requires certain sites to develop and implement a Rain Event Action Plan (REAP) that must be designed to protect all exposed portions of the site within 48 hours prior to any likely precipitation event.

Annual Reporting: this General Permit requires all projects that are enrolled for more than one continuous three-month period to submit information and annually certify that their site is in compliance

ED_002781A_00003896-00538

with these requirements. The primary purpose of this requirement is to provide information needed for overall program evaluation and pubic information.

Certification/Training Requirements for Key Project Personnel: this General Permit requires that key personnel (e.g., SWPPP preparers, inspectors, etc.) have specific training or certifications to ensure their level of knowledge and skills are adequate to ensure their ability to design and evaluate project specifications that will comply with General Permit requirements.

Linear Underground/Overhead Projects: this General Permit includes requirements for all Linear Underground/Overhead Projects (LUPs).

ED_002781A_00003896-00539

II. RATIONALE

A. General Permit Approach

A general permit for construction activities is an appropriate permitting approach for the following reasons:

1. A general permit is an efficient method to establish the essential regulatory requirements for a broad range of construction activities under differing site conditions;

2. A general permit is the most efficient method to handle the large number of construction storm water permit applications;

3. The application process for coverage under a general permit is far less onerous than that for individual permit and hence more cost effective;

4. A general permit is consistent with USEPA's four-tier permitting strategy, the purpose of which is to use the flexibility provided by the CWA in designing a workable and efficient permitting system; and

5. A general permit is designed to provide coverage for a group of related facilities or operations of a specific industry type or group of industries. It is appropriate when the discharge characteristics are sufficiently similar, and a standard set of permit requirements can effectively provide environmental protection and comply with water quality standards for discharges. In most cases, the general permit will provide sufficient and appropriate management requirements to protect the quality of receiving waters from discharges of storm water from construction sites.

There may be instances where a general permit is not appropriate for a specific construction project. A Regional Water Board may require any discharger otherwise covered under the General Permit to apply for and obtain an Individual Permit or apply for coverage under a more specific General Permit. The Regional Water Board must determine that this General Permit does not provide adequate assurance that water quality will be protected, or that there is a site-specific reason why an individual permit should be required.

B. Construction Activities Covered

1. **Construction activity subject to this General Permit:**

Any construction or demolition activity, including, but not limited to, clearing, grading, grubbing, or excavation, or any other activity that results in a land disturbance of equal to or greater than one acre.

Construction activity that results in land surface disturbances of less than one acre if the construction activity is part of a larger common plan of development or sale of one or more acres of disturbed land surface.

Construction activity related to residential, commercial, or industrial development on lands currently used for agriculture including, but not limited to, the construction of buildings related to agriculture that are considered industrial pursuant to USEPA regulations, such as dairy barns or food processing facilities.

Construction activity associated with LUPs including, but not limited to, those activities necessary for the installation of underground and overhead linear facilities (e.g., conduits, substructures, pipelines, towers, poles, cables, wires, connectors, switching, regulating and transforming equipment and associated ancillary facilities) and include, but are not limited to, underground utility mark-out, potholing, concrete

ED_002781A_00003896-00540

and asphalt cutting and removal, trenching, excavation, boring and drilling, access road and pole/tower pad and cable/wire pull station, substation construction, substructure installation, construction of tower footings and/or foundations, pole and tower installations, pipeline installations, welding, concrete and/or pavement repair or replacement, and stockpile/borrow locations.

Discharges of sediment from construction activities associated with oil and gas exploration, production, processing, or treatment operations or transmission facilities.[3]

Storm water discharges from dredge spoil placement that occur outside of U.S. Army Corps of Engineers jurisdiction[4] (upland sites) and that disturb one or more acres of land surface from construction activity are covered by this General Permit. Construction projects that intend to disturb one or more acres of land within the jurisdictional boundaries of a CWA § 404 permit should contact the appropriate Regional Water Board to determine whether this permit applies to the project.

2. Linear Underground/Overhead Projects (LUPs) subject to this General Permit:

Underground/overhead facilities typically constructed as LUPs include, but are not limited to, any conveyance, pipe, or pipeline for the transportation of any gaseous, liquid (including water, wastewater for domestic municipal services), liquescent, or slurry substance; any cable line or wire for the transmission of electrical energy; any cable line or wire for communications (e.g., telephone, telegraph, radio or television messages); and associated ancillary facilities. Construction activities associated with LUPs include, but are not limited to, those activities necessary for the installation of underground and overhead linear facilities (e.g., conduits, substructures, pipelines, towers, poles, cables, wires, connectors, switching, regulating and transforming equipment and associated ancillary facilities) and include, but are not limited to, underground utility mark-out, potholing, concrete and asphalt cutting and removal, trenching, excavation, boring and drilling, access road and pole/tower pad and cable/wire pull station, substation construction, substructure installation, construction of tower footings and/or foundations, pole and tower installations, pipeline installations, welding, concrete and/or pavement repair or replacement, and stockpile/borrow locations.

Water Quality Order 2003-0007-DWQ regulated construction activities associated with small LUPs that resulted in land disturbances greater than one acre, but less than five acres. These projects were considered non-traditional construction projects. Attachment A of this Order now regulates all construction activities from LUPs resulting in land disturbances greater than one acre.

3. Common Plan of Development or Sale

USEPA regulations include the term "common plan of development or sale" to ensure that acreage within a common project does not artificially escape the permit requirements because construction activities are phased, split among smaller parcels, or completed by different owners/developers. In the absence of an exact definition of "common plan of development or sale," the State Water Board is required to exercise its regulatory discretion in providing a common sense interpretation of the term as it applies to construction projects and permit coverage. An overbroad interpretation of the term would render meaningless the clear "one acre" federal permitting threshold and would potentially trigger permitting of

---

[3] Pursuant to the Ninth Circuit Court of Appeals' decision in *NRDC v. EPA* (9th Cir. 2008) 526 F.3d 591, and subsequent denial of the USEPA's petition for reconsideration in November 2008, oil and gas construction activities discharging storm water contaminated only with sediment are no longer exempt from the NPDES program.

[4] A construction site that includes a dredge and/or fill discharge to any water of the United States (e.g., wetland, channel, pond, or marine water) requires a CWA Section 404 permit from the U.S. Army Corps of Engineers and a CWA Section 401 Water Quality Certification from the Regional Water Board or State Water Board.

ED_002781A_00003896-00541

almost any construction activity that occurs within an area that had previously received area-wide utility or road improvements.

Construction projects generally receive grading and/or building permits (Local Permits) from local authorities prior to initiating construction activity. These Local Permits spell out the scope of the project, the parcels involved, the type of construction approved, etc. Referring to the Local Permit helps define "common plan of development or sale." In cases such as tract home development, a Local Permit will include all phases of the construction project including rough grading, utility and road installation, and vertical construction. All construction activities approved in the Local Permit are part of the common plan and must remain under the General Permit until construction is completed. For custom home construction, Local Permits typically only approve vertical construction as the rough grading, utilities, and road improvements were already independently completed under the a previous Local Permit. In the case of a custom home site, the homeowner must submit plans and obtain a distinct and separate Local Permit from the local authority in order to proceed. It is not the intent of the State Water Board to require permitting for an individual homeowner building a custom home on a private lot of less than one acre if it is subject to a separate Local Permit. Similarly, the installation of a swimming pool, deck, or landscaping that disturbs less than one acre that was not part of any previous Local Permit are not required to be permitted.

The following are several examples of construction activity of less than one acre that would require permit coverage:

a. A landowner receives a building permit(s) to build tract homes on a 100-acre site split into 200 one-third acre parcels, (the remaining acreage consists of streets and parkways) which are sold to individual homeowners as they are completed. The landowner completes and sells all the parcels except for two. Although the remaining two parcels combined are less than one acre, the landowner must continue permit coverage for the two parcels.

b. One of the parcels discussed above is sold to another owner who intends to complete the construction as already approved in the Local Permit. The new landowner must file Permit Registration Documents (PRDs) to complete the construction even if the new landowner is required to obtain a separate Local Permit.

c. Landowner in (1) above purchases 50 additional one half-acre parcels adjacent to the original 200-acre project. The landowner seeks a Local Permit (or amendment to existing Local permit) to build on 20 parcels while leaving the remaining 30 parcels for future development. The landowner must amend PRDs to include the 20 parcels 14 days prior to commencement of construction activity on those parcels.

C. Construction Activities Not Covered

1. Traditional Construction Projects Not Covered

This General Permit does not apply to the following construction activity:

a. Routine maintenance to maintain original line and grade, hydraulic capacity, or original purpose of the facility.

b. Disturbances to land surfaces solely related to agricultural operations such as disking, harrowing, terracing and leveling, and soil preparation.

ED_002781A_00003896-00542

c. Discharges of storm water from areas on tribal lands; construction on tribal lands is regulated by a federal permit.

d. Discharges of storm water within the Lake Tahoe Hydrologic Unit. The Lahontan Regional Water Board has adopted its own permit to regulate storm water discharges from construction activity in the Lake Tahoe Hydrologic Unit (Regional Water Board 6SLT). Owners of construction projects in this watershed must apply for the Lahontan Regional Water Board permit rather than the statewide Construction General Permit. Construction projects within the Lahontan region must also comply with the Lahontan Region Project Guideline for Erosion Control (R6T-2005-0007 Section), which can be found at **http://www.waterboards.ca.gov/lahontan/Adopted_Orders/2005/r6t_2005_0007.pdf**

e. Construction activity that disturbs less than one acre of land surface, unless part of a larger common plan of development or the sale of one or more acres of disturbed land surface.

f. Construction activity covered by an individual NPDES Permit for storm water discharges.

g. Landfill construction activity that is subject to the Industrial General Permit.

h. Construction activity that discharges to Combined Sewer Systems.

i. Conveyances that discharge storm water runoff combined with municipal sewage.

j. Discharges of storm water identified in CWA § 402(*l*)(2), 33 U.S.C. § 1342(*l*)(2).

2. **Linear Projects Not Covered**

a. LUP construction activity does not include linear routine maintenance projects. Routine maintenance projects are projects associated with operations and maintenance activities that are conducted on existing lines and facilities and within existing right-of-way, easements, franchise agreements, or other legally binding agreements of the discharger. Routine maintenance projects include, but are not limited to projects that are conducted to:

i. Maintain the original purpose of the facility or hydraulic capacity.

ii. Update existing lines[5] and facilities to comply with applicable codes, standards, and regulations regardless if such projects result in increased capacity.

iii. Repairing leaks.

Routine maintenance does not include construction of new[6] lines or facilities resulting from compliance with applicable codes, standards, and regulations.

Routine maintenance projects do not include those areas of maintenance projects that are outside of an existing right-of-way, franchise, easements, or agreements. When a project must secure new areas,

---

[5]Update existing lines includes replacing existing lines with new materials or pipes.
[6]New lines are those that are not associated with existing facilities and are not part of a project to update or replace existing lines.

those areas may be subject to this General Permit based on the area of disturbed land outside the original right-of-way, easement, or agreement.

b. LUP construction activity does not include field activities associated with the planning and design of a project (e.g., activities associated with route selection).

c. Tie-ins conducted immediately adjacent to "energized" or "pressurized" facilities by the discharger are not considered construction activities where all other LUP construction activities associated with the tie-in are covered by an NOI and SWPPP of a third party or municipal agency.

3. **EPA's Small Construction Rainfall Erosivity Waiver**

EPA's Storm Water Phase II Final Rule provides the option for a Small Construction Rainfall Erosivity Waiver. This waiver applies to small construction sites between 1 and 5 acres, and allows permitting authorities to waive those sites that do not have adverse water quality impacts.

Dischargers eligible for this waiver are exempt from Construction General Permit Coverage. In order to obtain the waiver, the discharger must certify to the State Water Board that small construction activity will occur only when the rainfall erosivity factor is less than 5 ("R" in the Revised Universal Soil Loss Equation). The period of construction activity begins at initial earth disturbance and ends with final stabilization. Where vegetation will be used for final stabilization, the date of installation of a practice that provides interim non-vegetative stabilization can be used for the end of the construction period. The operator must agree (as a condition waiver eligibility) to periodically inspect and properly maintain the area until the criteria for final stabilization as defined in the General Permit have been met. If use of this interim stabilization eligibility condition was relied on to qualify for the waiver, signature on the waiver with a certification statement constitutes acceptance of and commitment to complete the final stabilization process. The discharger must submit a waiver certification to the State Board prior to commencing construction activities.

USEPA funded a cooperative agreement with Texas A&M University to develop an online rainfall erosivity calculator. Dischargers can access the calculator from EPA's website at: www.epa.gov/npdes/storm water/cgp. Use of the calculator allows the discharger to determine potential eligibility for the rainfall erosivity waiver. It may also be useful in determining the time periods during which construction activity could be waived from permit coverage.

D. Obtaining and Terminating Permit Coverage

The appropriate Legally Responsible Person (LRP) must obtain coverage under this General Permit. To obtain coverage, the LRP or the LRP's Approved Signatory must file Permit Registration Documents (PRDs) prior to the commencement of construction activity. Failure to obtain coverage under this General Permit for storm water discharges to waters of the United States is a violation of the CWA and the California Water Code.

To obtain coverage under this General Permit, LRPs must electronically file the PRDs, which include a Notice of Intent (NOI), Storm Water Pollution Prevention Plan (SWPPP), and other documents required by this General Permit, and mail the appropriate permit fee to the State Water Board. It is expected that as the storm water program develops, the Regional Water Boards may issue General Permits or Individual Permits that contain more specific permit provisions. When this occurs, this General Permit will no longer regulate those dischargers that obtain coverage under Individual Permits.

Any information provided to the Regional Water Board shall comply with the Homeland Security Act and any other federal law that concerns security in the United States; any information that does not comply should not be submitted.

The application requirements of the General Permit establish a mechanism to clearly identify the responsible parties, locations, and scope of operations of dischargers covered by the General Permit and to document the discharger's knowledge of the General Permit's requirements.

This General Permit provides a grandfathering exception to existing dischargers subject to Water Quality Order No. 99-08-DWQ. Construction projects covered under Water Quality Order No. 99-08-DWQ shall obtain permit coverage at Risk Level 1. LUP projects covered under Water Quality Order No. 2003-0007-DWQ shall obtain permit coverage at LUP Type 1. The Regional Water Boards have the authority to require Risk Determination to be performed on projects currently covered under Water Quality Order No. 99-08-DWQ and 2003-0007-DWQ where they deem necessary.

LRPs must file a Notice of Termination (NOT) with the Regional Water Board when construction is complete and final stabilization has been reached or ownership has been transferred. The discharger must certify that all State and local requirements have been met in accordance with this General Permit. In order for construction to be found complete, the discharger must install post-construction storm water management measures and establish a long-term maintenance plan. This requirement is intended to ensure that the post-construction conditions at the project site do not cause or contribute to direct or indirect water quality impacts (i.e., pollution and/or hydromodification) upstream and downstream. Specifically, the discharger must demonstrate compliance with the post-construction standards set forth in this General Permit (Section XIII). The discharger is responsible for all compliance issues including all annual fees until the NOT has been filed and approved by the local Regional Water Board.

E. Discharge Prohibitions

This General Permit authorizes the discharge of storm water to surface waters from construction activities that result in the disturbance of one or more acres of land, provided that the discharger satisfies all permit conditions set forth in the Order. This General Permit prohibits the discharge of pollutants other than storm water and non-storm water discharges authorized by this General Permit or another NPDES permit. This General Permit also prohibits all discharges which contain a hazardous substance in excess of reportable quantities established in 40 C.F.R. §§ 117.3 and 302.4, unless a separate NPDES Permit has been issued to regulate those discharges. In addition, this General Permit incorporates discharge prohibitions contained in water quality control plans, as implemented by the nine Regional Water Boards. Discharges to Areas of Special Biological Significance (ASBS) are prohibited unless covered by an exception that the State Water Board has approved.

Non-storm water discharges include a wide variety of sources, including improper dumping, spills, or leakage from storage tanks or transfer areas. Non-storm water discharges may contribute significant pollutant loads to receiving waters. Measures to control spills, leakage, and dumping, and to prevent illicit connections during construction must be addressed through structural as well as non-structural BMPs. The State Water Board recognizes, however, that certain non-storm water discharges may be necessary for the completion of construction projects. Authorized non-storm water discharges may include those from de-chlorinated potable water sources such as: fire hydrant flushing, irrigation of vegetative erosion control measures, pipe flushing and testing, water to control dust, uncontaminated ground water dewatering, and other discharges not subject to a separate general NPDES permit adopted by a region. Therefore this General Permit authorizes such discharges provided they meet the following conditions.

These authorized non-storm water discharges must:

1. be infeasible to eliminate;
2. comply with BMPs as described in the SWPPP;
3. filter or treat, using appropriate technology, all dewatering discharges from sedimentation basins;

4. meet the NELs and NALs for pH and turbidity; and

5. not cause or contribute to a violation of water quality standards.

Additionally, authorized non-storm water discharges must not be used to clean up failed or inadequate construction or post-construction BMPs designed to keep materials onsite. Authorized non-storm water dewatering discharges may require a permit because some Regional Water Boards have adopted General Permits for dewatering discharges.

This General Permit prohibits the discharge of storm water that causes or threatens to cause pollution, contamination, or nuisance.

F. Effluent Standards for All Types of Discharges

1. Technology-Based Effluent Limitations

Permits for storm water discharges associated with construction activity must meet all applicable provisions of Sections 301 and 402 of the CWA. These provisions require controls of pollutant discharges that utilize best available technology economically achievable (BAT) for toxic pollutants and non conventional pollutants and best conventional pollutant control technology (BCT) for conventional pollutants. Additionally, these provisions require controls of pollutant discharges to reduce pollutants and any more stringent controls necessary to meet water quality standards. The USEPA has already established such limitations, known as effluent limitation guidelines (ELGs), for some industrial categories. This is not the case with construction discharges. In instances where there are no ELGs the permit writer is to use best professional judgment (BPJ) to establish requirements that the discharger must meet using BAT/BCT technology. This General Permit contains both narrative effluent limitations and new numeric effluent limitations for pH and turbidity, set using the best professional judgment (BPJ) equivalent to BAT and BCT (respectively).

BAT/BCT technologies not only include passive systems such as conventional runoff and sediment control, but also treatment systems such as coagulation/flocculation using sand filtration, when appropriate. Such technologies allow for effective treatment of soil particles less 0.02 mm (medium silt) in diameter. The discharger must install structural controls, as necessary, such as erosion and sediment controls that meet BAT and BCT to achieve compliance with water quality standards. The narrative effluent limitations constitute compliance with the requirements of the CWA.

The numeric effluent limitations for pH and turbidity are based upon BPJ, which authorizes the State Water Board to issue a permit containing "such conditions as the Administrator determines are necessary to carry out the provisions of this Chapter" (CWA § 402(a)(1), 33 U.S.C. § 1342(a)(1).) Because the USEPA has not yet issued an effluent limit guideline for storm water, the State Water Board must use BPJ to consider the appropriate technology for the category or class of point sources, based upon all available information and any unique factors relating to the sources. In addition, the permitting authority must consider a number of factors including the cost of achieving effluent reductions in relation to the effluent reduction benefits, the age of the equipment and facilities, the processes employed and any required process changes, engineering aspects of the control technologies, non-water quality environmental impacts (including energy requirements), and other such other factors as the State Water Board deems appropriate (CWA 304(b)(1)(B)).

Because the permit is an NPDES permit, there is no legal requirement to address the factors set forth in Water Code sections 13241 and 13263, unless the permit is more stringent than what federal law requires. (See *City of Burbank v. State Water Resources Control Bd.* (2005) 35 Cal.4th 613, 618, 627.) None of the requirements in this permit are more stringent than the minimum federal requirements, which include technology-based requirements achieving BAT/BCT and strict compliance with water quality standards. The inclusion of numeric effluent limitations (NELs) in the permit do not cause the permit to be

more stringent than current federal law. NELs and best management practices are simply two different methods of achieving the same federal requirement: strict compliance with state water quality standards. Federal law authorizes both narrative and numeric effluent limitations to meet state water quality standards. The use of NELs to achieve compliance with water quality standards is not a more stringent requirement than the use of BMPs. (State Water Board Order No. WQ 2006-0012 (*Boeing*).) Accordingly, the State Water Board does not need to take into account the factors in Water Code sections 13241 and 13263.

The State Water Board has concluded that the establishment of BAT/BCT will not create or aggravate other environmental problems through increases in air pollution, solid waste generation, or energy consumption. While there may be a slight increase in non-water quality impacts due to the implementation of additional monitoring or the construction of additional BMPs, these impacts will be negligible in comparison with the construction activities taking place on site and would be justified by the water quality benefits associated with compliance.

Considerations related to the processes employed and the changes necessitated by the adoption of the BAT/BCT effluent limits have been assessed throughout the stakeholder process (e.g., the Blue Ribbon Panel and the March 2007 preliminary draft) and are discussed in detail in Section I.C of this Fact Sheet. The following sections set forth the engineering aspects of the control technologies and the rationale for the determination of the numeric effluents for pH and turbidity.

In consideration of the costs for the establishment of BAT and BCT limits for pH and turbidity, existing requirements for the control of storm water pollution from construction sites have been established by USEPA and the previous Construction General Permit (State Water Board Order No. 99-08-DWQ) issued by the State Water Board. The General Permit establishes one, consistent set of performance standards for all levels and types of discharges (i.e., risk, linear utility, and ATS).The only difference is that for each level or type of discharge there may be more or less specific effluent limitations (e.g., the addition of numeric effluent limitations for turbidity applies to level/type 3 discharges). And the numeric effluent limitations themselves represent a minimum technology standard. In other words, the additional numeric effluent limitations, compared to the existing permit's narrative effluent limitations, do not increase compliance requirements; rather, they simply represent a point where one can quantitatively measure compliance with the lower end of the range of required technologies. Therefore, the compliance costs associated with the BAT/BCT numeric effluent limitations in this permit only differ by the costs required to measure compliance with the NELs when compared to the baseline compliance costs to comply with the limitations already established through EPA regulations and the existing Construction General Permit.

The State Water Board estimates these measurement costs to be approximately $1000 per construction site for the duration of the project. This represents the estimated cost of purchasing (or renting) monitoring equipment, in this case a turbidimeter (~$600) and a pH meter (~$400). In some cases the costs may be higher or lower. Costs could be lower if the discharger chooses to design and implement the project in a manner where effluent monitoring is likely to be avoided (e.g., no exposure during wet weather seasons, no discharge due to containment, etc.). Costs could be more if the project is subject to many effluent monitoring events or if the discharger exceeds NALs and/or NELs, resulting in additional monitoring requirements.

i. ***pH NEL***

Given the potential contaminants, the minimum standard method for control of pH in runoff requires the use of preventive measures such as avoiding concrete pours during rainy weather, covering concrete and directing flow away from fresh concrete if a pour occurs during rain, covering scrap drywall and stucco materials when stored outside and potentially exposed to rain, and other housekeeping measures. If necessary, pH-impaired storm water from construction sites can be treated in a filter or settling pond or basin, with additional natural or chemical treatment required to meet pH limits set forth in this permit. The basin or pond acts as a collection point and holds storm water for a sufficient period for the contaminants to be settled out, either naturally or artificially, and allows any additional treatment to take place. The State Water Board considers these techniques to be equivalent to BCT. In determining the pH

ED_002781A_00003896-00547

concentration limit for discharges, the State Water Board used BPJ to set these limitations.

The chosen limits were established by calculating three standard deviations above and below the mean pH of runoff from highway construction sites[7] in California. Proper implementation of BMPs should result in discharges that are within the range of 6.0 to 9.0 pH Units.

ii. ***Turbidity NEL***

The Turbidity NEL of 500 NTU is a technology-based numeric effluent limitation and was developed using three different analyses aimed at finding the appropriate threshold to set the technology-based limit to ensure environmental protection, effluent quality and cost-effectiveness. The analyses fell into three, main types: (1) an ecoregion-specific dataset developed by Simon et. al. (2004) [8]; (2) Statewide Regional Water Quality Control Board enforcement data; and (3) published, peer-reviewed studies and reports on in-situ performance of best management practices in terms of erosion and sediment control on active construction sites.

A 1:3 relationship between turbidity (expressed as NTU) and suspended sediment concentration (expressed as mg/L) is assumed based on a review of suspended sediment and turbidity data from three gages used in the USGS National Water Quality Assessment Program:

USGS 11074000 SANTA ANA R BL PRADO DAM CA
USGS 11447650 SACRAMENTO R A FREEPORT CA
USGS 11303500 SAN JOAQUIN R NR VERNALIS CA

The turbidity NEL represents a feasible and cost effective performance standard that is demonstrated to be achievable. Although data has been collected to demonstrate that lower effluent levels may be achievable at some sites, staff cannot conclude at this time that a lower NEL is achievable within all the ecoregions of the state. The NEL represents staff determination that the NEL is the most practicable based on available data. The turbidity NEL represents a bridge between the narrative effluent limitations and receiving water limitations. The NEL limit may be considered an interim performance standard as additional data becomes available for evaluation during the next permit cycle. To support this NEL, State Water Board staff analyzed construction site discharge information (monitoring data, estimates) and receiving water monitoring information.

Since the turbidity NEL represents an appropriate threshold level expected at a site, compliance with this value does not necessarily represent compliance with either the narrative effluent limitations (as enforced through the BAT/BCT standard) or the receiving water limitations. In the San Diego region, some inland surface waters have a receiving water objective for turbidity equal to 20 NTU. Obviously a discharge up to, but not exceeding, the turbidity NEL of 500 NTU may still cause or contribute to the exceedance of the 20 NTU standard. Most of the waters of the State are protected by turbidity objectives based on background conditions.

Table 1 - Regional Water Board Basin Plans, Water Quality Objectives for Turbidity

REGIONAL WATER BOARD	WQ Objective	Background/Natural Turbidity	Maximum Increase
1	Based on background	All levels	20%

[7] Caltrans Construction Sites Runoff Characterization Study, 2002. Available at: http://www.dot.ca.gov/hq/env/stormwater/pdf/CTSW-RT-02-055.pdf.
[8] Simon, A., W.D. Dickerson, and A. Heins. 2004. Suspended-sediment transport rates at the 1.5-year recurrence interval for ecoregions of the United States: transport conditions at the bankfull and effective discharge. Geomorphology 58: pp. 243-262.

2	Based on background	> 50 NTU	10%
3	Based on background	0-50 JTU 50-100 JTU > 100 JTU	20% 10 NTU 10%
4	Based on background	0-50 NTU > 50 NTU	20% 10%
5	Based on background	0-5 NTU 5-50 NTU 50-100 NTU >100 NTU	1 NTU 20% 10 NTU 10%
6	Based on background	All levels	10%
7	Based on background	N/A	N/A
8	Based on background	0-50 NTU 50-100 NTU >100 NTU	20% 10 NTU 10%
9	Inland Surface Waters, 20 NTU All others, based on background	0-50 NTU 50-100 NTU >100 NTU	20% 10 NTU 10%

Table 2 shows the suspended sediment concentrations at the 1.5 year flow recurrence interval for the 12 ecoregions in California from Simon et. al (2004).

Table 2 - Results of Ecoregion Analysis

Ecoregion	Percent of California Land Area	Median Suspended Sediment Concentration (mg/L)
1	9.1	874
4	0.2	120
5	8.8	35.6
6	20.7	1530
7	7.7	122
8	3.0	47.4
9	9.4	284
13	5.2	143
14	21.7	5150
78	8.1	581
80	2.4	199
81	3.7	503
Area-weighted average		1633

If a 1:3 relationship between turbidity and suspended sediment is assumed, the median turbidity is 544 NTU.

The following table is composed of turbidity readings measured in NTUs from administrative civil liberty (ACL) actions for construction sites from 2003 - 2009. This data was derived from the complete listing of construction-related ACLs for the six year period. All ACLs were reviewed and those that included turbidimeter readings at the point of storm water discharge were selected for this dataset.

Table 3 – ACL Sampling Data taken by Regional Water Board Staff

WDID#	Region	Discharger	Turbidity (NTU)
5S34C331884	5S	Bradshaw Interceptor Section 6B	1800
5S05C325110	5S	Bridalwood Subdivision	1670
5S48C336297	5S	Cheyenne at Browns Valley	1629
5R32C314271	5R	Grizzly Ranch Construction	1400
6A090406008	6T	El Dorado County Department of Transportation, Angora Creek	97.4
5S03C346861	5S	TML Development, LLC	1600
6A31C325917	6T	Northstar Village	See Subdata Set

Subdata Set - Turbidity for point of storm water runoff discharge at Northstar Village

Date	Turbidity (NTU)	Location
10/5/2006	900	Middle Martis Creek
11/2/2006	190	Middle Martis Creek
01/04/2007	36	West Fork, West Martis Creek
02/08/2007	180	Middle Martis Creek
02/09/2007	130	Middle Martis Creek
02/09/2007	290	Middle Martis Creek
02/09/2007	100	West Fork, West Martis Creek
02/10/2007	28	Middle Martis Creek
02/10/2007	23	Middle Martis Creek
02/10/2007	32	Middle Martis Creek
02/10/2007	12	Middle Martis Creek
02/10/2007	60	West Fork, West Martis Creek
02/10/2007	34	West Fork, West Martis Creek

A 95% confidence interval for mean turbidity in an ACL order was constructed. The data set used was a small sample size, so the 500 NTU (the value derived as the NEL for this General Permit) needed to be verified as a possible population mean. In this case, the population refers to a hypothetical population of turbidity measurements of which our sample of 20 represents. A t-distribution was assumed due to the small sample size:

Mean: 512.23 NTU
Standard Deviation: 686.85
Margin of Error: 321.45
Confidence Interval: 190.78 NTU (Low)
833.68 NTU (High)

Based on a constructed 95% confidence interval, an ACL order turbidity measurement will be between 190.78 – 833.68 NTU. 500 NTU falls within this range. Using the same data set, a small-sample hypothesis test was also performed to test if the ACL turbidity data set contains enough information to cast doubt on choosing a 500 NTU as a mean. 500 NTU was again chosen due to its proposed use as an acceptable NEL value. The test was carried out using a 95% confidence interval. Results indicated that the ACL turbidity data set *does not* contain significant sample evidence to reject the claim of 500 NTU as an acceptable mean for the ACL turbidity population.

There are not many published, peer-reviewed studies and reports on in-situ performance of best management practices in terms of erosion and sediment control on active construction sites. The most often cited study is a report titled, "Improving the Cost Effectiveness of Highway Construction Site Erosion and Pollution Control" (Horner, Guedry, and Kortenhof 1990, http://www.wsdot.wa.gov/Research/Reports/200/200.1.htm). In a comment letter summarizing this report sent to the State Water Board, the primary author, Dr. Horner, states:

"The most effective erosion control product was wood fiber mulch applied at two different rates along with a bonding agent and grass seed in sufficient time before the tests to achieve germination. Plots treated in this way reduced influent turbidity by more than 97 percent and discharged effluent exhibiting mean and maximum turbidity values of 21 and 73 NTU, respectively. Some other mulch and blanket materials performed nearly as well. These tests demonstrated the control ability of widely available BMPs over a very broad range of erosion potential."

Other technologies studied in this report produced effluent quality at or near 100 NTU. It is the BPJ of the State Water Board staff that erosion control, while preferred, is not always an option on construction sites and that technology performance in a controlled study showing effluent quality directly leaving a BMP is always easier and cheaper to control than effluent being discharged from the project (edge of property, etc.). As a result, it is the BPJ of the State Water Board staff that it is not cost effective or feasible, at this time, for all risk level and type 3 sites in California to achieve effluent discharges with turbidity values that are less than 100 NTU.

To summarize, the analysis showed that: (1) results of the Simon et. al dataset reveals turbidity values in background receiving water in California's ecoregions range from 16 NTU to 1716 NTU (with a mean of 544 NTU); (2) based on a constructed 95% confidence interval, construction sites will be subject to administrative civil liability (ACL) when their turbidity measurement falls between 190.78 – 833.68 NTU; and (3) sites with highly controlled discharges employing and maintaining good erosion control practices can discharge effluent from the BMP with turbidity values less than 100 NTU. Therefore, the appropriate threshold to set the technology-based limit to ensure environmental protection, effluent quality, and cost-effectiveness ranges from 100 NTU to over 1700 NTU. To keep this parameter and the costs of compliance as low as possible, State Water Board staff has determined, using its BPJ, that it is most cost effective to set the numeric effluent limitation for turbidity at 500 NTU.

a. Compliance Storm Event

In response to public comments on the last draft and the recommendations of the expert panel, this General Permit contains "compliance storm event" exceptions from the technology-based NELs. The rationale is that technology-based requirements are developed assuming a certain design storm (defined as the storm producing a rainfall amount for a specified BMPs capacity). Compliance thresholds are needed for storm events above and beyond the design storms assumed to determine the technology-based NELs. For Risk Level 3 project sites applicable to NELs, this General Permit establishes a compliance storm event as the equivalent rainfall in a 5-year, 24-hour storm. This compliance storm was chosen due to its relative infrequent occurrence and the fact that the runoff volume associated with it is not as large as a 10-year, 24-hour storm event. The discharger shall determine this value using Western

Regional Climate Center Precipitation Frequency Maps[9] for 5-year 24-hour storm events in Northern and Southern California (note that these are expressed in tenths of inches – divide by 10 to get inches).

b. TMDLs and Waste Load Allocations

Dischargers located within the watershed of a CWA § 303(d) impaired water body, for which a TMDL for sediment has been adopted by the Regional Water Board or USEPA, must comply with the approved TMDL if it identifies "construction activity" or land disturbance as a source of sediment. If it does, the TMDL should include a specific waste load allocation for this activity/source. The discharger, in this case, may be required by a separate Regional Water Board order to implement additional BMPs, conduct additional monitoring activities, and/or comply with an applicable waste load allocation and implementation schedule. If a specific waste load allocation has been established that would apply to a specific discharge, the Regional Water Board may adopt an order requiring specific implementation actions necessary to meet that allocation. In the instance where an approved TMDL has specified a general waste load allocation to construction storm water discharges, but no specific requirements for construction sites have been identified in the TMDL, dischargers must consult with the state TMDL authority[10] to confirm that adherence to a SWPPP that meets the requirements of the General Permit will be consistent with the approved TMDL.

2. Determining Compliance with Effluent Standards

a. Technology-Based Numeric Action Levels (NALs)

This General Permit contains technology-based NALs for pH and turbidity, and requirements for effluent monitoring at all Risk level 2 & 3, and LUP Type 2 & 3 sites. Numeric action levels are essentially numeric benchmark values for certain parameters that, if exceeded in effluent sampling, trigger the discharger to take actions. Exceedance of an NAL does not itself constitute a violation of the General Permit. If the discharger fails to take the corrective action required by the General Permit, though, that may consititute a violation.

The primary purpose of NALs is to assist dischargers in evaluating the effectiveness of their on-site measures. Construction sites need to employ many different systems that must work together to achieve compliance with the permit's requirements. The NALs chosen should indicate whether the systems are working as intended.

Another purpose of NALs is to provide information regarding construction activities and water quality impacts. This data will provide the State and Regional Water Boards and the rest of the storm water community with more information about levels and types of pollutants present in runoff and how effective the dischargers BMPs are at reducing pollutants in effluent. The State Water Board also hopes to learn more about the linkage between effluent and receiving water quality. In addition, these requirements will provide information on the mechanics needed to establish compliance monitoring programs at construction sites in future permit deliberations.

i. *pH*

---

[9] http://www.wrcc.dri.edu/pcpnfreq/nca5y24.gif & http://www.wrcc.dri.edu/pcpnfreq/sca5y24.gif .
[10] http://www.waterboards.ca.gov/tmdl/tmdl.html.

The chosen limits were established by calculating one standard deviation above and below the mean pH of runoff from highway construction sites[11] in California. Proper implementation of BMPs should result in discharges that are within the range of 6.5 to 8.5 pH Units.

The Caltrans study included 33 highway construction sites throughout California over a period of four years, which included 120 storm events. All of these sites had BMPs in place that would be generally implemented at all types of construction sites in California.

ii. ***Turbidity***

BPJ was used to develop an NAL that can be used as a learning tool to help dischargers improve their site controls, and to provide meaningful information on the effectiveness of storm water controls. A statewide turbidity NAL has been set at 250 NTU.

G. Receiving Water Limitations

Construction-related activities that cause or contribute to an exceedance of water quality standards must be addressed. The dynamic nature of construction activity gives the discharger the ability to quickly identify and monitor the source of the exceedances. This is because when storm water mobilizes sediment, it provides visual cues as to where corrective actions should take place and how effective they are once implemented.

This General Permit requires that storm water discharges and authorized non-storm water discharges must not contain pollutants that cause or contribute to an exceedance of any applicable water quality objective or water quality standards. The monitoring requirements in this General Permit for sampling and analysis procedures will help determine whether BMPs installed and maintained are preventing pollutants in discharges from the construction site that may cause or contribute to an exceedance of water quality standards.

Water quality standards consist of designated beneficial uses of surface waters and the adoption of ambient criteria necessary to protect those uses. When adopted by the State Water Board or a Regional Water Board, the ambient criteria are termed "water quality objectives." If storm water runoff from construction sites contains pollutants, there is a risk that those pollutants could enter surface waters and cause or contribute to an exceedance of water quality standards. For that reason, dischargers should be aware of the applicable water quality standards in their receiving waters. (The best method to ensure compliance with receiving water limitations is to implement BMPs that prevent pollutants from contact with storm water or from leaving the construction site in runoff.)

In California, water quality standards are published in the Basin Plans adopted by each Regional Water Board, the California Toxics Rule (CTR), the National Toxics Rule (NTR), and the Ocean Plan.

Dischargers can determine the applicable water quality standards by contacting Regional Water Board staff or by consulting one of the following sources. The actual Basin Plans that contain the water quality standards can be viewed at the website of the appropriate Regional Water Board. (http://www.waterboards.ca.gov/regions.html), the State Water Board site for statewide plans (http://www.waterboards.ca.gov/plnspols/index.html), or the USEPA regulations for the NTR and CTR (40 C.F.R. §§ 131.36-38). Basin Plans and statewide plans are also available by mail from the appropriate Regional Water Board or the State Water Board. The USEPA regulations are available at http://www.epa.gov/. Additional information concerning water quality standards can be accessed through http://www.waterboards.ca.gov/stormwtr/gen_const.html.

---

[11] Caltrans Construction Sites Runoff Characterization Study, 2002. Available at: http://www.dot.ca.gov/hq/env/stormwater/pdf/CTSW-RT-02-055.pdf.

H. Training Qualifications and Requirements

The Blue Ribbon Panel (BRP) made the following observation about the lack of industry-specific training requirements:

"Currently, there is no required training or certification program for contractors, preparers of soil erosion and sediment control Storm Water Pollution Prevention Plans, or field inspectors."

Order 99-08-DWQ required that all dischargers train their employees on how to comply with the permit, but it did not specificy a curriculum or certification program. This has resulted in inconsistent implementation by all affected parties - the dischargers, the local governments where the construction activity occurs, and the regulators required to enforce 99-08-DWQ. This General Permit requires Qualified SWPPP Developers and practitioners to obtain appropriate training, and makes this curriculum mandatory two years after adoption, to allow time for course completion. The State and Regional Water Board are working with many stakeholders to develop the curriculum and mechanisms needed to develop and deliver the courses.

To ensure that the preparation, implementation, and oversight of the SWPPP is sufficient for effective pollution prevention, the Qualified SWPPP Developer and Qualified SWPPP Practitioners responsible for creating, revising, overseeing, and implementing the SWPPP must attend a State Water Board-sponsored or approved Qualified SWPPP Developer and Qualified SWPPP Practitioner training course.

I. Sampling, Monitoring, Reporting and Record Keeping

1. Traditional Construction Monitoring Requirements

This General Permit requires visual monitoring at all sites, and effluent water quality at all Risk Level 2 & 3 sites. It requires receiving water monitoring at some Risk Level 3 sites. All sites are required to submit annual reports, which contain various types of information, depending on the site characteristics and events. A summary of the monitoring and reporting requirements is found in Table 4.

Table 4 - Required Monitoring Elements for Risk Levels

	Visual	Non-visible Pollutant	Effluent	Receiving Water
Risk Level 1	three types required for all Risk Levels: non-storm water, pre-rain and post-rain	As needed for all Risk Levels (see below)	where applicable	not required
Risk Level 2			pH, turbidity	not required
Risk Level 3			(if NEL exceeded) pH, turbidity and SSC	(if NEL exceeded) pH, turbidity and SSC. Bioassessment for sites 30 acres or larger.

a. Visual

All dischargers are required to conduct quarterly, non-storm water visual inspections. For these inspections, the discharger must visually observe each drainage area for the presence of (or indications of prior) unauthorized and authorized non-storm water discharges and their sources. For storm-related inspections, dischargers must visually observe storm water discharges at all discharge locations within two business days after a qualifying event. For this requirement, a qualifying rain event is one producing precipitation of ½ inch or more of discharge. Dischargers must conduct a post-storm event inspection to

ED_002781A_00003896-00554

(1) identify whether BMPs were adequately designed, implemented, and effective, and (2) identify any additional BMPs necessary and revise the SWPPP accordingly. Dischargers must maintain on-site records of all visual observations, personnel performing the observations, observation dates, weather conditions, locations observed, and corrective actions taken in response to the observations.

b. Non-Visible Pollutant Monitoring

This General Permit requires that all dischargers develop a sampling and analysis strategy for monitoring pollutants that are not visually detectable in storm water. Monitoring for non-visible pollutants must be required at any construction site when the exposure of construction materials occurs and where a discharge can cause or contribute to an exceedance of a water quality objective.

Of significant concern for construction discharges are the pollutants found in materials used in large quantities at construction sites throughout California and exposed throughout the rainy season, such as cement, flyash, and other recycled materials or by-products of combustion. The water quality standards that apply to these materials will depend on their composition. Some of the more common storm water pollutants from construction activity are not CTR pollutants. Examples of non-visible pollutants include glyphosate (herbicides), diazinon and chlorpyrifos (pesticides), nutrients (fertilizers), and molybdenum (lubricants). The use of diazinon and chlorpyrifos is a common practice among landscaping professionals and may trigger sampling and analysis requirements if these materials come into contact with storm water. High pH values from cement and gypsum, high pH and SSC from wash waters, and chemical/fecal contamination from portable toilets, also are not CTR pollutants. Although some of these constituents do have numeric water quality objectives in individual Basin Plans, many do not and are subject only to narrative water quality standards (i.e. not causing toxicity). Dischargers are encouraged to discuss these issues with Regional Water Board staff and other storm water quality professionals.

The most effective way to avoid the sampling and analysis requirements, and to ensure permit compliance, is to avoid the exposure of construction materials to precipitation and storm water runoff. Materials that are not exposed do not have the potential to enter storm water runoff, and therefore receiving waters sampling is not required. Preventing contact between storm water and construction materials is one of the most important BMPs at any construction site.

Preventing or eliminating the exposure of pollutants at construction sites is not always possible. Some materials, such as soil amendments, are designed to be used in a manner that will result in exposure to storm water. In these cases, it is important to make sure that these materials are applied according to the manufacturer's instructions and at a time when they are unlikely to be washed away. Other construction materials can be exposed when storage, waste disposal or the application of the material is done in a manner not protective of water quality. For these situations, sampling is required unless there is capture and containment of all storm water that has been exposed. In cases where construction materials may be exposed to storm water, but the storm water is contained and is not allowed to run off the site, sampling will only be required when inspections show that the containment failed or is breached, resulting in potential exposure or discharge to receiving waters.

The discharger must develop a list of potential pollutants based on a review of potential sources, which will include construction materials soil amendments, soil treatments, and historic contamination at the site. The discharger must review existing environmental and real estate documentation to determine the potential for pollutants that could be present on the construction site as a result of past land use activities.

Good sources of information on previously existing pollution and past land uses include:

i. Environmental Assessments;

ii. Initial Studies;

iii. Phase 1 Assessments prepared for property transfers; and

iv. Environmental Impact Reports or Environmental Impact Statements prepared under the requirements of the National Environmental Policy Act or the California Environmental Quality Act.

In some instances, the results of soil chemical analyses may be available and can provide additional information on potential contamination.

The potential pollutant list must include all non-visible pollutants that are known or should be known to occur on the construction site including, but not limited to, materials that:

i. are being used in construction activities;

ii. are stored on the construction site;

iii. were spilled during construction operations and not cleaned up;

iv. were stored (or used) in a manner that created the potential for a release of the materials during past land use activities;

v. were spilled during previous land use activities and not cleaned up; or

vi. were applied to the soil as part of past land use activities.

C. Effluent Monitoring

Federal regulations[12] require effluent monitoring for discharges subject to NALs and NELs. Subsequently, all Risk Level 2 and 3 dischargers must perform sampling and analysis of effluent discharges to characterize discharges associated with construction activity from the entire area disturbed by the project. Dischargers must collect samples of stored or contained storm water that is discharged subsequent to a storm event producing precipitation of ½ inch or more at the time of discharge.

Table 5 - Storm Water Effluent Monitoring Requirements by Risk Level

	Frequency	Effluent Monitoring (Section E, below)
Risk Level 1	when applicable	non-visible pollutant parameters (if applicable)
Risk Level 2	Minimum of 3 samples per day during qualifying rain event characterizing discharges associated with construction activity from the entire project disturbed area.	pH, turbidity, and non-visible pollutant parameters (if applicable)
Risk Level 3	Minimum of 3 samples per day during qualifying rain event characterizing discharges associated with construction activity from the entire project disturbed area.	If NEL exceeded: pH, turbidity and suspended sediment concentration (SSC)., Plus non-visible pollutant parameters if applicable

Risk Level 1 dischargers must analyze samples for:

[12] 40 C.F.R. § 122.44.

i. any parameters indicating the presence of pollutants identified in the pollutant source assessment required in Attachment C contained in the General Permit.

Risk Level 2 dischargers must analyze samples for:

i. pH and turbidity;

ii. any parameters indicating the presence of pollutants identified in the pollutant source assessment required in Attachment D contained in the General Permit, and

iii. any additional parameters for which monitoring is required by the Regional Water Board.

Risk Level 3 dischargers must analyze samples for:

i. pH, turbidity and SSC;

ii. any parameters indicating the presence of pollutants identified in the pollutant source assessment required in Attachment E contained in the General Permit, and

iii. any additional parameters for which monitoring is required by the Regional Water Board.

2. **Linear Monitoring and Sampling Requirements**

Attachment A, establishes minimum monitoring and reporting requirements for all LUPs. It establishes different monitoring requirements depending on project complexity and risk to water quality. The monitoring requirements for Type 1 LUPs are less than Type 2 & 3 projects because Type 1 projects have a lower potential to impact water quality.

A discharger shall prepare a monitoring program prior to the start of construction and immediately implement the program at the start of construction for LUPs. The monitoring program must be implemented at the appropriate level to protect water quality at all times throughout the life of the project.

a. **Type 1 LUP Monitoring Requirements**

A discharger must conduct daily visual inspections of Type 1 LUPs during working hours while construction activities are occurring. Inspections are to be conducted by qualified personnel and can be conducted in conjunction with other daily activities. Inspections will be conducted to ensure the BMPs are adequate, maintained, and in place at the end of the construction day. The discharger will revise the SWPPP, as appropriate, based on the results of the daily inspections. Inspections can be discontinued in non-active construction areas where soil disturbing activities have been completed and final stabilization has been achieved (e.g., trench has been paved, substructures have been installed, and successful final vegetative cover or other stabilization criteria have been met).

A discharger shall implement the monitoring program for inspecting Type 1 LUPs. This program requires temporary and permanent stabilization BMPs after active construction is completed. Inspection activities will continue until adequate permanent stabilization has been established and will continue in areas where re-vegetation is chosen until minimum vegetative coverage has been established. Photographs shall be taken during site inspections and submitted to the State Water Board.

b. Type 2 & 3 LUP Monitoring Requirements

A discharger must conduct daily visual inspections of Type 2 & 3 LUPs during working hours while construction activities are occurring. Inspections are to be conducted by qualified personnel and can be in conjunction with other daily activities.

All dischargers of Type 2 & 3 LUPs are required to conduct inspections by qualified personnel of the construction site during normal working hours prior to all anticipated storm events and after actual storm events. During extended storm events, the discharger shall conduct inspections during normal working hours for each 24-hour period. Inspections can be discontinued in non-active construction areas where soil disturbing activities have been completed and final stabilization has been achieved (e.g., trench has been paved, substructures installed, and successful vegetative cover or other stabilization criteria have been met).

The goals of these inspections are (1) to identify areas contributing to a storm water discharge; (2) to evaluate whether measures to reduce pollutant loadings identified in the SWPPP are adequate and properly installed and functioning in accordance with the terms of the General Permit; and (3) to determine whether additional control practices or corrective maintenance activities are needed. Equipment, materials, and workers must be available for rapid response to failures and emergencies. All corrective maintenance to BMPs shall be performed as soon as possible, depending upon worker safety.

All dischargers shall develop and implement a monitoring program for inspecting Type 2 & 3 LUPs that require temporary and permanent stabilization BMPs after active construction is completed. Inspections will be conducted to ensure the BMPs are adequate and maintained. Inspection activities will continue until adequate permanent stabilization has been established and will continue in areas where revegetation is chosen until minimum vegetative coverage has been established.

A log of inspections conducted before, during, and after the storm events must be maintained in the SWPPP. The log will provide the date and time of the inspection and who conducted the inspection. Photographs must be taken during site inspections and submitted to the State Water Board.

c. Sampling Requirements for all LUP Project Types

LUPs are also subject to sampling and analysis requirements for visible pollutants (i.e., sedimentation/siltation, turbidity) and for non-visible pollutants.

Sampling for visible pollutants is required for Type 2 & 3 LUPs.

Non-visible pollutant monitoring is required for pollutants associated with construction sites and activities that (1) are not visually detectable in storm water discharges, and (2) are known or should be known to occur on the construction site, and (3) could cause or contribute to an exceedance of water quality objectives in the receiving waters. Sample collection for non-visible pollutants must only be required (1) during a storm event when pollutants associated with construction activities may be discharged with storm water runoff due to a spill, or in the event there was a breach, malfunction, failure, and/or leak of any BMP, and (2) when the discharger has failed to adequately clean the area of material and pollutants. Failure to implement appropriate BMPs will trigger the same sampling requirements as those required for a breach, malfunction and/or leak, or when the discharger has failed to implement appropriate BMPs prior to the next storm event.

Additional monitoring parameters may be required by the Regional Water Boards.

It is not anticipated that many LUPs will be required to collect samples for pollutants not visually detected in runoff due to the nature and character of the construction site and activities as previously described in this fact sheet. Most LUPs are constructed in urban areas with public access (e.g., existing roadways, road shoulders, parking areas, etc.). This raises a concern regarding the potential contribution of pollutants from vehicle use and/or from normal activities of the public (e.g., vehicle washing, landscape fertilization, pest spraying, etc.) in runoff from the project site. Since the dischargers are not the land

ED_002781A_00003896-00558

owners of the project area and are not able to control the presence of these pollutants in the storm water that runs through their projects, it is not the intent of this General Permit to require dischargers to sample for these pollutants. This General Permit does not require the discharger to sample for these types of pollutants except where the discharger has brought materials onsite that contain these pollutants and when a condition (e.g., breach, failure, etc.) described above occurs.

3. Receiving Water Monitoring

In order to ensure that receiving water limitations are met, discharges subject to numeric effluent limitations (i.e., Risk Level 3, LUP Type 3, and ATS with direct discharges into receiving waters) must also monitor the downstream receiving water(s) for turbidity, SSC, and pH (if applicable) when an NEL is exceeded.

a. Bioassessment Monitoring

This General Permit requires a bioassessment of receiving waters for dischargers of Risk Level 3 or LUP Type 3 construction projects equal to or larger than 30 acres with direct discharges into receiving waters. Benthic macroinvertebrate samples will be taken upstream and downstream of the site's discharge point in the receiving water. Bioassessments measure the quality of the stream by analyzing the aquatic life present. Higher levels of appropriate aquatic species tend to indicate a healthy stream; whereas low levels of organisms can indicate stream degradation. Active construction sites have the potential to discharge large amounts of sediment and pollutants into receiving waters. Requiring a bioassessment for large project sites, with the most potential to impact water quality, provides a snapshot of the health of the receiving water prior to initiation of construction activities. This snapshot can be used in comparison to the health of the receiving water after construction has commenced.

Each ecoregion (biologically and geographically related area) in the State has a specific yearly peak time where stream biota is in a stable and abundant state. This time of year is called an Index Period. The bioassessment requirements in this General Permit, requires benthic macroinvertebrate sampling within a sites index period. The State Water Board has developed a map designating index periods for the ecoregions in the State (see State Water Board Website).

This General Permit requires the bioassessment methods to be in accordance with the Surface Water Ambient Monitoring Program (SWAMP) in order to provide data consistency within the state as well as generate useable biological stream data.

Table 6 - Receiving Water Monitoring Requirements

	Receiving Water Monitoring Parameters
Risk Level 1 /LUP Type 1	not required
Risk Level 2 / LUP Type 2	not required
Risk Level 3 / LUP Type 3	If NEL exceeded: pH (if applicable), turbidity, and SSC. Bioassessment for sites 30 acres or larger.

4. Reporting Requirements

a. NEL Violation Report

All Risk Level 3 and LUP Type 3 dischargers must electronically submit all storm event sampling results to the State and Regional Water Boards, via SMARTS, no later than 5 days after the conclusion of the storm event. The purpose of the electronic filing of the NEL Violation Report is to 1) inform stakeholder agencies and organizations and the general public, and 2) notify the State and Regional Water Boards of

the exceedance so that they can determine whether any follow-up (e.g., inspection, enforcement, etc.) is necessary to bring the site into compliance.

In the event that an applicable NEL has been exceeded during a storm event equal to or larger than the Compliance Storm Event, Risk level 3/LUP Type 3 dischargers shall report the on-site rain gauge reading and nearby governmental rain gauge readings for verification. Specifically, the NEL Exceedance Report is required to contain:

- the analytical method(s), method reporting unit(s), and method detection limit(s) of each analytical parameter (analytical results that are less than the method detection limit are to be reported as "less than the method detection limit or <MDL");
- the date, place, and time of sampling;
- any visual observation (inspections);
- any measurements, including precipitation; and
- a description of the current BMPs associated with the effluent sample that exceeded the NEL and any proposed corrective actions taken.

b. **NAL Exceedance Report**

All Risk Level 3 and LUP Type 3 dischargers must electronically submit all storm event sampling results to the State and Regional Water Boards, via the electronic data system, no later than 5 days after the conclusion of the storm event. In the event that any effluent sample exceeds an applicable NAL, all Risk Level 2 and LUP Type 2 dischargers must electronically submit all storm event sampling results to the State and Regional Water Boards no later than 10 days after the conclusion of the storm event. The Regional Water Boards have the authority to require the submittal of an NAL Exceedance Report.

Specifically, the NAL Exceedance Report is required to contain:

- the analytical method(s), method reporting unit(s), and method detection limit(s) of each analytical parameter (analytical results that are less than the method detection limit are to be reported as "less than the method detection limit or <MDL");
- the date, place, and time of sampling;
- any visual observation (inspections);
- any measurements, including precipitation; and
- a description of the current BMPs associated with the effluent sample that exceeded the NAL and any proposed corrective actions taken.

c. **Annual Report**

All dischargers must prepare and electronically submit an annual report no later than September 1 of each year using the Storm water Multi-Application Reporting and Tracking System (SMARTS). The Annual Report must include a summary and evaluation of all sampling and analysis results, original laboratory reports, chain of custody forms, a summary of all corrective actions taken during the compliance year, and identification of any compliance activities or corrective actions that were not implemented.

5. Record Keeping

According to 40 C.F.R. Parts 122.21(p) and 122.41(j), the discharger is required to retain paper or electronic copies of all records required by this General Permit for a period of at least three years from the date generated or the date submitted to the State Water Board or Regional Water Boards. A discharger must retain records for a period beyond three years as directed by Regional Water Board.

J. Risk Determination

1. Traditional Projects

a. Overall Risk Determination

There are two major requirements related to site planning and risk determination in this General Permit. The project's overall risk is broken up into two elements – (1) project sediment risk (the relative amount of sediment that can be discharged, given the project and location details) and (2) receiving water risk (the risk sediment discharges pose to the receiving waters).

Project Sediment Risk:
Project Sediment Risk is determined by multiplying the R, K, and LS factors from the Revised Universal Soil Loss Equation (RUSLE) to obtain an estimate of project-related bare ground soil loss expressed in tons/acre. The RUSLE equation is as follows:

$$A = (R)(K)(LS)(C)(P)$$

Where: A = the rate of sheet and rill erosion
R = rainfall-runoff erosivity factor
K = soil erodibility factor
LS = length-slope factor
C = cover factor (erosion controls)
P = management operations and support practices (sediment controls)

The C and P factors are given values of 1.0 to simulate bare ground conditions.

There is a map option and a manual calculation option for determining soil loss. For the map option, the R factor for the project is calculated using the online calculator at http://cfpub.epa.gov/npdes/stormwater/LEW/lewCalculator.cfm. The product of K and LS are shown on Figure 1. To determine soil loss in tons per acre, the discharger multiplies the R factor times the value for K times LS from the map.

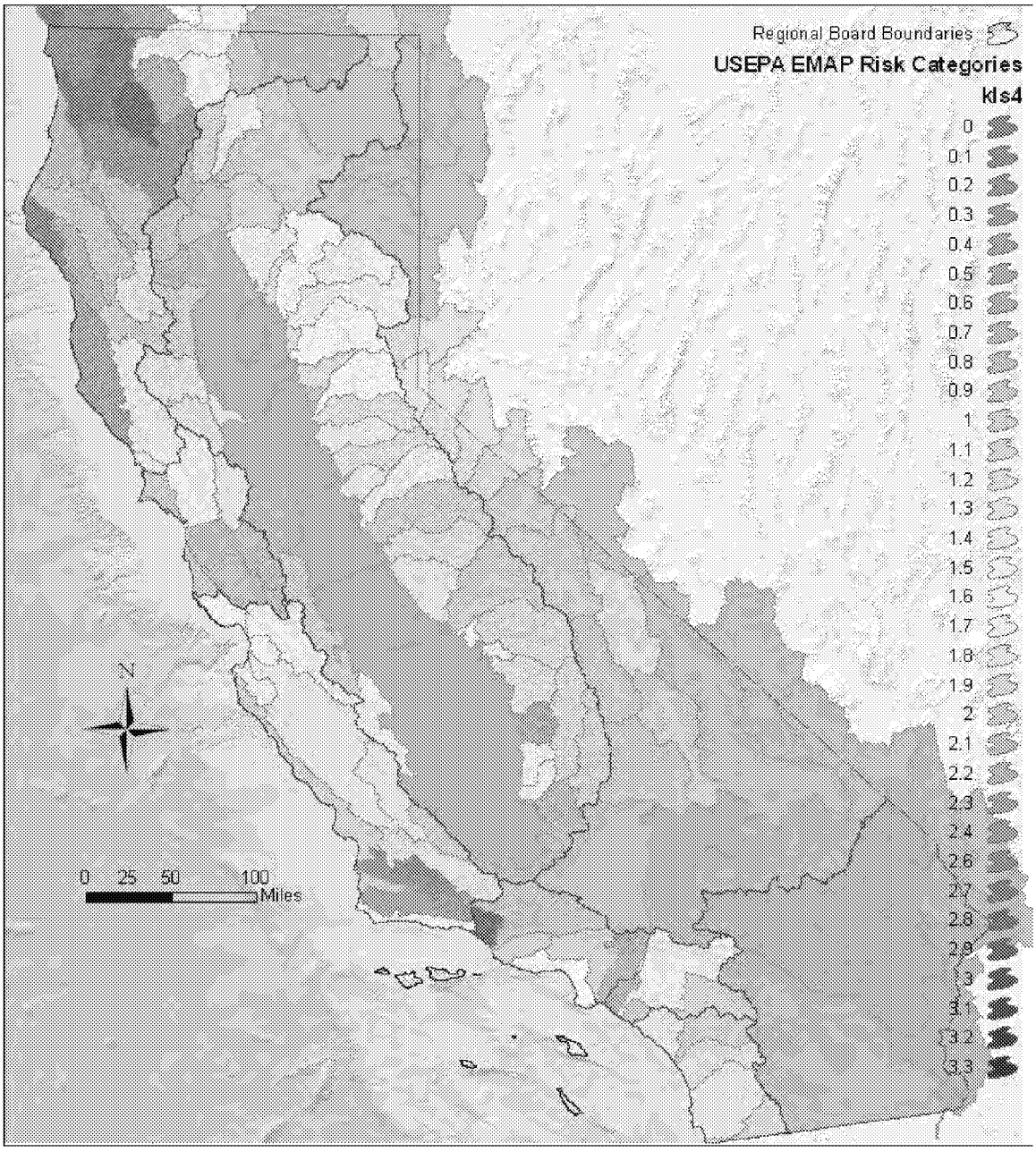

Water Boards

State Water Resources Control Board, January 15, 2008

Figure 1 -Statewide Map of K * LS

For the manual calculation option, the R factor for the project is calculated using the online calculator at http://cfpub.epa.gov/npdes/stormwater/LEW/lewCalculator.cfm. The K and LS factors are determined using Appendix 1.

Soil loss of less than 15 tons/acre is considered **low** sediment risk.
Soil loss between 15 and 75 tons/acre is **medium** sediment risk.
Soil loss over 75 tons/acre is considered **high** sediment risk.

The soil loss values and risk categories were obtained from mean and standard deviation RKLS values from the USEPA EMAP program. High risk is the mean RKLS value plus two standard deviations. Low risk is the mean RKLS value minus two standard deviations.

Receiving Water Risk:
Receiving water risk is based on whether a project drains to a sediment-sensitive waterbody. A sediment-sensitive waterbody is either

on the most recent 303d list for waterbodies impaired for sediment;
has a USEPA-approved Total Maximum Daily Load implementation plan for sediment; **or**
has the beneficial uses of COLD, SPAWN, and MIGRATORY.

A project that meets at least one of the three criteria has a high receiving water risk. A list of sediment-sensitive waterbodies will be posted on the State Water Board's website. It is anticipated that an interactive map of sediment sensitive water bodies in California will be available in the future.

The Risk Levels have been altered by eliminating the possibility of a Risk Level 4, and expanding the constraints for Risk Levels 1, 2, and 3. Therefore, projects with high receiving water risk and high sediment risk will be considered a Risk Level 3 risk to water quality.

In response to public comments, the Risk Level requirements have also been changed such that Risk Level 1 projects will be subject to minimum BMP and visual monitoring requirements, Risk Level 2 projects will be subject to NALs and some additional monitoring requirements, and Risk Level 3 projects will be subject to NELs, and more rigorous monitoring requirements such as receiving water monitoring and in some cases bioassessment.

Table 7 - Combined Risk Level Matrix

Combined Risk Level Matrix				
Receiving Water Risk		Sediment Risk		
		Low	Medium	High
	Low	Level 1	Level 2	
	High	Level 2		Level 3

b. Effluent Standards

All dischargers are subject to the narrative effluent limitations specified in the General Permit. The narrative effluent limitations require storm water discharges associated with construction activity to meet all applicable provisions of Sections 301 and 402 of the CWA. These provisions require controls of pollutant discharges that utilize BAT and BCT to reduce pollutants and any more stringent controls necessary to meet water quality standards.

Risk Level 2, and 3 dischargers are subject to numeric effluent standards comparable to the project's risk to water quality. Risk Level 2 dischargers that pose a medium risk to water quality are subject to technology-based NALs for pH and turbidity. Risk Level 3 dischargers that pose a high risk to water quality are subject to technology-based NALs and technology-based NELs for pH and turbidity.

c. Good Housekeeping

Proper handling and managing of construction materials can help minimize threats to water quality. The discharger must consider good housekeeping measures for: construction materials, waste management, vehicle storage & maintenance, landscape materials, and potential pollutant sources. Examples include; conducting an inventory of products used, implementing proper storage & containment, and properly cleaning all leaks from equipment and vehicles.

d. Non-Storm Water Management

Non-storm water discharges directly connected to receiving waters or the storm drain system have the potential to negatively impact water quality. The discharger must implement measures to control all non-storm water discharges during construction, and from dewatering activities associated with construction. Examples include; properly washing vehicles in contained areas, cleaning streets, and minimizing irrigation runoff.

e. Erosion Control

The best way to minimize the risk of creating erosion and sedimentation problems during construction is to disturb as little of the land surface as possible by fitting the development to the terrain. When development is tailored to the natural contours of the land, little grading is necessary and, consequently, erosion potential is lower.[14] Other effective erosion control measures include: preserving existing vegetation where feasible, limiting disturbance, and stabilizing and re-vegetating disturbed areas as soon as possible after grading or construction activities. Particular attention must be paid to large, mass-graded sites where the potential for soil exposure to the erosive effects of rainfall and wind is great and where there is potential for significant sediment discharge from the site to surface waters. Until permanent vegetation is established, soil cover is the most cost-effective and expeditious method to protect soil particles from detachment and transport by rainfall. Temporary soil stabilization can be the single most important factor in reducing erosion at construction sites. The discharger is required to consider measures such as: covering disturbed areas with mulch, temporary seeding, soil stabilizers, binders, fiber rolls or blankets, temporary vegetation, and permanent seeding. These erosion control measures are only examples of what should be considered and should not preclude new or innovative approaches currently available or being developed. Erosion control BMPs should be the primary means of preventing storm water contamination, and sediment control techniques should be used to capture any soil that becomes eroded.[13]

Risk Level 3 dischargers pose a higher risk to water quality and are therefore additionally required to ensure that post-construction soil loss is equivalent to or less than the pre-construction levels.

f. Sediment Control

Sediment control BMPs should be the secondary means of preventing storm water contamination. When erosion control techniques are ineffective, sediment control techniques should be used to capture any soil that becomes eroded. The discharger is required to consider perimeter control measures such as: installing silt fences or placing straw wattles below slopes. These sediment control measures are only examples of what should be considered and should not preclude new or innovative approaches currently available or being developed.

Because Risk Level 2 and 3 dischargers pose a higher risk to water quality, additional requirements for the application of sediment controls are imposed on these projects. This General Permit also authorizes the Regional Water Boards to require Risk Level 3 dischargers to implement additional site-specific

---

[13] U.S. Environmental Protection Agency. 2007. Developing Your Storm Water Pollution Prevention Plan: A Guide for Construction Sites.

sediment control requirements if the implementation of other erosion or sediment controls are not adequately protecting the receiving waters.

g. Run-on and Runoff Control

Inappropriate management of run-on and runoff can result in excessive physical impacts to receiving waters from sediment and increased flows. The discharger is required to manage all run-on and runoff from a project site. Examples include: installing berms and other temporary run-on and runoff diversions.

Risk Level 1 dischargers with lower risks to impact water quality are not subject to the run-on and runoff control requirements unless an evaluation deems them necessary or visual inspections show that such controls are required.

h. Inspection, Maintenance and Repair

All measures must be periodically inspected, maintained and repaired to ensure that receiving water quality is protected. Frequent inspections coupled with thorough documentation and timely repair is necessary to ensure that all measures are functioning as intended.

i. Rain Event Action Plan (REAP)

A Rain Event Action Plan (REAP) is a written document, specific for each rain event. A REAP should be designed that when implemented it protects all exposed portions of the site within 48 hours of any likely precipitation event forecast of 50% or greater probability.

This General Permit requires Risk Level 2 and 3 dischargers to develop and implement a REAP designed to protect all exposed portions of their sites within 48 hours prior to any likely precipitation event. The REAP requirement is designed to ensure that the discharger has adequate materials, staff, and time to implement erosion and sediment control measures that are intended to reduce the amount of sediment and other pollutants generated from the active site. A REAP must be developed when there is likely a forecast of 50% or greater probability of precipitation in the project area. (The National Oceanic and Atmospheric Administration (NOAA) defines a chance of precipitation as a probability of precipitation of 30% to 50% chance of producing precipitation in the project area.[14] NOAA defines the probability of precipitation (PoP) as the likelihood of occurrence (expressed as a percent) of a measurable amount (0.01 inch or more) of liquid precipitation (or the water equivalent of frozen precipitation) during a specified period of time at any given point in the forecast area.) Forecasts are normally issued for 12-hour time periods. Descriptive terms for uncertainty and aerial coverage are used as follows:

Table 8 -National Oceanic and Atmospheric Administration (NOAA) Definition of Probability of Precipitation (PoP)

PoP	Expressions of Uncertainty	Aerial Coverage
0%	none used	none used
10%	none used	isolated
20%	slight chance	isolated
30-50%	chance	scattered

[14] http://www.crh.noaa.gov/lot/severe/wxterms.php.

60-70%	likely	numerous
80-100%	none used	none used

The discharger must obtain the precipitation forecast information from the National Weather Service Forecast Office (http://www.srh.noaa.gov/).

2. Linear Projects

a. Linear Risk Determination

LUPs vary in complexity and water quality concerns based on the type of project. This General Permit has varying application requirements based on the project's risk to water quality. Factors that lead to the characterization of the project include location, sediment risk, and receiving water risk.

Based on the location and complexity of a project area or project section area, LUPs are separated into project types. As described below, LUPs have been categorized into three project types.

i. *Type 1 LUPs*

Type 1 LUPs are those construction projects where:

(1) 70 percent or more of the construction activity occurs on a paved surface and where areas disturbed during construction will be returned to preconstruction conditions or equivalent protection established at the end of the construction activities for the day, or

(2) greater than 30 percent of construction activities occur within the non-paved shoulders or land immediately adjacent to paved surfaces, or where construction occurs on unpaved improved roads, including their shoulders or land immediately adjacent to them where:

Areas disturbed during construction will be returned to pre-construction conditions or equivalent protection established at the end of the construction activities for the day to minimize the potential for erosion and sediment deposition, and

Areas where established vegetation was disturbed during construction will be stabilized and re-vegetated by the end of project. When required, adequate temporary stabilization Best Management Practices (BMPs) will be installed and maintained until vegetation is established to meet minimum cover requirements established in this General Permit for final stabilization.

Type 1 LUPs typically do not have a high potential to impact storm water quality because (1) these construction activities are not typically conducted during a rain event, (2) these projects are normally constructed over a short period of time[15], minimizing the duration that pollutants could potentially be exposed to rainfall; and (3) disturbed soils such as those from trench excavation are required to be hauled away, backfilled into the trench, and/or covered (e.g., metal plates, pavement, plastic covers over spoil piles) at the end of the construction day.

---

[15] Short period of time refers to a project duration of weeks to months, but typically less than one year in duration.

ED_002781A_00003896-00566

Type 1 LUPs are determined during the risk assessment found in Attachment A.1 to be 1) low sediment risk and low receiving water risk; 2) low sediment risk and medium receiving water risk; and 3) medium sediment risk and low receiving water risk.

This General Permit requires the discharger to ensure a SWPPP is developed for these construction activities that is specific to project type, location and characteristics.

ii. ***Type 2 LUPs:***

Type 2 projects are determined to have a combination of High, Medium, and Low project sediment risk along with High, Medium, and Low receiving water risk. Like Type 1 projects, Type 2 projects are typically constructed over a short period of time. However, these projects have a higher potential to impact water quality because they:

(1) typically occur outside the more urban/developed areas;

(2) have larger areas of soil disturbance that are not closed or restored at the end of the day;

(3) may have onsite stockpiles of soil, spoil and other materials;

(4) cross or occur in close proximity to a wide variety of sensitive resources that may include, but are not limited to, steep topography and/or water bodies; and

(5) have larger areas of disturbed soils that may be exposed for a longer time interval before final stabilization, cleanup and/or reclamation occurs.

This General Permit requires the discharger to develop and implement a SWPPP for these construction activities that are specific for project type, location and characteristics.

iii. ***Type 3 LUPs:***

Type 3 projects are determined to have a combination of High and Medium project sediment risk along with High and Medium receiving water risk. Similar to Type 2 projects, Type 3 projects have a higher potential to impact water quality because they:

(1) typically occur outside of the more urban/developed areas;

(2) have larger areas of soil disturbance that are not closed or restored at the end of the day;

(3) may have onsite stockpiles of soil, spoil and other materials;

(4) cross or occur in close proximity to a wide variety of sensitive resources that may include, but are not limited to, steep topography and/or water bodies; and

(5) have larger areas of disturbed soils that may be exposed for a longer time interval before final stabilization, cleanup and/or reclamation occurs.

This General Permit requires the discharger to develop and implement a SWPPP for these construction activities that are specific for project type, location, and characteristics.

b. **Linear Effluent Standards**

All LUPs are subject to the narrative effluent limitations specified in the General Permit.

Type 2 and 3 LUPs are subject to NELs comparable to the project type's risk to water quality. Type 2 projects that pose an intermediate risk to water quality are subject to technology-based NALs for pH and turbidity. Type 3 projects posing a high risk to water quality are subject to technology-based NALs and NELs for pH and turbidity.

c. Linear Good Housekeeping

Improper use and handling of construction materials could potentially cause a threat to water quality. In order to ensure proper site management of these construction materials, all LUP dischargers must comply with a minimum set of Good Housekeeping measures specified in Attachment A of this General Permit.

d. Linear Non-Storm Water Management

In order to ensure control of all non-storm water discharges during construction, all LUP dischargers must comply with the Non-Storm Water Management measures specified in Attachment A of this General Permit.

e. Linear Erosion Control

This General Permit requires all LUP dischargers to implement effective wind erosion control measures, and soil cover for inactive areas. Type 3 LUPs posing a higher risk to water quality are additionally required to ensure the post-construction soil loss is equivalent to or less than the pre-construction levels.

f. Linear Sediment Control

In order to ensure control and containment of all sediment discharges, all LUP dischargers must comply with the general Sediment Control measures specified in Attachment A or this General Permit. Additional requirements for sediment controls are imposed on Type 2 & 3 LUPs due to their higher risk to water quality.

g. Linear Run-on and Runoff Control

Discharges originating outside of a project's perimeter and flowing onto the property can adversely affect the quantity and quality of discharges originating from a project site. In order to ensure proper management of run-on and runoff, all LUPs must comply with the run-on and runoff control measures specified in Attachment A of this General Permit. Due to the lower risk of impacting water quality, Type 1 LUPs are not required to implement run-on and runoff controls unless deemed necessary by the discharger.

h. Linear Inspection, Maintenance and Repair

Proper inspection, maintenance, and repair activities are important to ensure the effectiveness of on-site measures to control water quality. In order to ensure that inspection, maintenance, and repair activities are adequately performed, the all LUP dischargers a re required to comply with the Inspection, Maintenance, and Repair requirements specified in Attachment A of this General Permit.

K. ATS[16] Requirements

There are instances on construction sites where traditional erosion and sediment controls do not effectively control accelerated erosion. Under such circumstances, or under circumstances where storm water discharges leaving the site may cause or contribute to an exceedance of a water quality standard, the use of an Active Treatment System (ATS) may be necessary. Additionally, it may be appropriate to use an ATS when site constraints inhibit the ability to construct a correctly sized sediment basin, when clay and/or highly erosive soils are present, or when the site has very steep or long slope lengths.[17]

Although treatment systems have been in use in some form since the mid-1990s, the ATS industry in California is relatively young, and detailed regulatory standards have not yet been developed. Many developers are using these systems to treat storm water discharges from their construction sites. The new ATS requirements set forth in this General Permit are based on those in place for small wastewater treatment systems, ATS regulations from the Central Valley Regional Water Quality Control Board (September 2005 memorandum "2005/2006 Rainy Season – Monitoring Requirements for Storm Water Treatment Systems that Utilize Chemical Additives to Enhance Sedimentation"), the Construction Storm Water Program at the State of Washington's Department of Ecology, as well as recent advances in technology and knowledge of coagulant performance and aquatic safety.

The effective design of an ATS requires a detailed survey and analysis of site conditions. With proper planning, ATS performance can provide exceptional water quality discharge and prevent significant impacts to surface water quality, even under extreme environmental conditions.

These systems can be very effective in reducing the sediment in storm water runoff, but the systems that use additives/polymers to enhance sedimentation also pose a potential risk to water quality (e.g., operational failure, equipment failure, additive/polymer release, etc.). The State Water Board is concerned about the potential acute and chronic impacts that the polymers and other chemical additives may have on fish and aquatic organisms if released in sufficient quantities or concentrations. In addition to anecdotal evidence of polymer releases causing aquatic toxicity in California, the literature supports this concern.[18] For example, cationic polymers have been shown to bind with the negatively charged gills of fish, resulting in mechanical suffocation.[19] Due to the potential toxicity impacts, which may be caused by the release of additives/polymers into receiving waters, this General Permit establishes residual polymer monitoring and toxicity testing requirements have been established in this General Permit for discharges from construction sites that utilize an ATS in order to protect receiving water quality and beneficial uses.

The primary treatment process in an ATS is coagulation/flocculation. ATS's operate on the principle that the added coagulant is bound to suspended sediment, forming floc, which is gravitationally settled in tanks or a basin, or removed by sand filters. A typical installation utilizes an injection pump upstream from the clarifier tank, basin, or sand filters, which is electronically metered to both flow rate and suspended solids level of the influent, assuring a constant dose. The coagulant mixes and reacts with the influent, forming a dense floc. The floc may be removed by gravitational setting in a clarifier tank or basin, or by filtration. Water from the clarifier tank, basin, or sand filters may be routed through cartridge(s) and/or bag filters for final polishing. Vendor-specific systems use various methods of dose control, sediment/floc removal, filtration, etc., that are detailed in project-specific documentation. The

---

[16] An ATS is a treatment system that employs chemical coagulation, chemical flocculation, or electrocoagulation in order to reduce turbidity caused by fine suspended sediment.
[17] Pitt, R., S. Clark, and D. Lake. 2006. Construction Site Erosion and Sediment Controls: Planning, Design, and Performance. DEStech Publications. Lancaster, PA. 370pp.
[18] RomØen, K., B. Thu, and Ø. Evensen. 2002. Immersion delivery of plasmid DNA II. A study of the potentials of a chitosan based delivery system in rainbow trout (*Oncorhynchus mykiss*) fry. *Journal of Controlled Release* **85**: 215-225.
[19] Bullock, G., V. Blazer, S. Tsukuda, and S. Summerfelt. 2000. Toxicity of acidified chitosan for cultured rainbow trout (*Oncorhynchus mykiss*). *Aquaculture* **185**:273-280.

ED_002781A_00003896-00569

particular coagulant/flocculant to be used for a given project is determined based on the water chemistry of the site because the coagulants are specific in their reactions with various types of sediments. Appropriate selection of dosage must be carefully matched to the characteristics of each site.

ATS's are operated in two differing modes, either Batch or Flow-Through. Batch treatment can be defined as Pump-Treat-Hold-Test-Release. In Batch treatment, water is held in a basin or tank, and is not discharged until treatment is complete. Batch treatment involves holding or recirculating the treated water in a holding basin or tank(s) until treatment is complete or the basin or storage tank(s) is full. In Flow-Through treatment, water is pumped into the ATS directly from the runoff collection system or storm water holding pond, where it is treated and filtered as it flows through the system, and is then directly discharged. "Flow-Through Treatment" is also referred to as "Continuous Treatment."

1. Effluent Standards

This General Permit establishes NELs for discharges from construction sites that utilize an ATS. These systems lend themselves to NELs for turbidity and pH because of their known reliable treatment. Advanced systems have been in use in some form since the mid-1990s. An ATS is considered reliable, can consistently produce a discharge of less than 10 NTU, and has been used successfully at many sites in several states since 1995 to reduce turbidity to very low levels.[20]

This General Permit contains "compliance storm event" exceptions from the technology-based NELs for ATS discharges. The rationale is that technology-based requirements are developed assuming a certain design storm. In the case of ATS the industry-standard design storm is 10-year, 24-hour (as stated in Attachment F of this General Permit), so the compliance storm event has been established as the 10-year 24-hour event as well to provide consistency.

2. Training

Operator training is critical to the safe and efficient operation and maintenance of the ATS, and to ensure that all State Water Board monitoring and sampling requirements are met. The General Permit requires that all ATS operators have training specific to using ATS's liquid coagulants.

L. Post-Construction Requirements

Under past practices, new and redevelopment construction activities have resulted in modified natural watershed and stream processes. This is caused by altering the terrain, modifying the vegetation and soil characteristics, introducing impervious surfaces such as pavement and buildings, increasing drainage density through pipes and channels, and altering the condition of stream channels through straightening, deepening, and armoring. These changes result in a drainage system where sediment transport capacity is increased and sediment supply is decreased. A receiving channel's response is dependent on dominant channel materials and its stage of adjustment.

Construction activity can lead to impairment of beneficial uses in two main ways. First, during the actual construction process, storm water discharges can negatively affect the chemical, biological, and physical properties of downstream receiving waters. Due to the disturbance of the landscape, the most likely pollutant is sediment, however pH and other non-visible pollutants are also of great concern. Second, after most construction activities are completed at a construction site, the finished project may result in significant modification of the site's response to precipitation. New development and redevelopment

---

[20] Currier, B., G. Minton, R. Pitt, L. Roesner, K. Schiff, M. Stenstrom, E. Strassler, and E. Strecker. 2006. The Feasibility of Numeric Effluent Limits Applicable to Discharges of Storm Water Associated with Municipal, Industrial and Construction Activities.

projects have almost always resulted in permanent post-construction water quality impacts because more precipitation ends up as runoff and less precipitation is intercepted, evapotranspired, and infiltrated.

General Permit 99-08-DWQ required the SWPPP to include a description of all post-construction BMPs on a site and a maintenance schedule. An effective storm water management strategy must address the full suite of storm events (water quality, channel protection, overbank flood protection, extreme flood protection) (Figure 2).

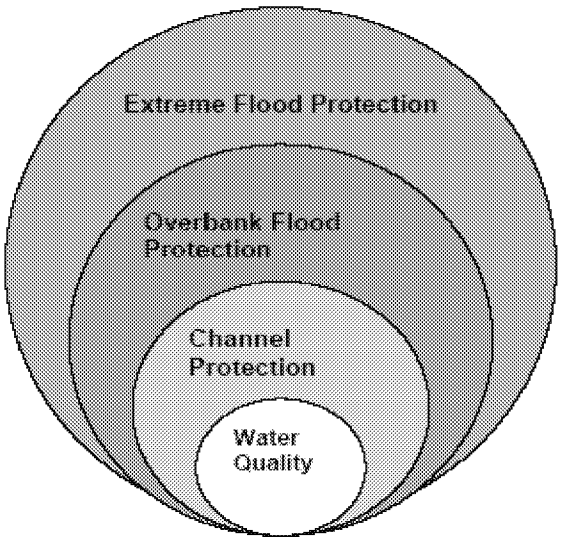

Figure 2 - Suite of Storm Events

The post-construction storm water performance standards in this General Permit specifically address water quality and channel protection events. Overbank flood protection and extreme flood protection events are traditionally dealt with in local drainage and flood protection ordinances. However, measures in this General Permit to address water quality and channel protection also reduce overbank and extreme flooding impacts. This General Permit aims to match post-construction runoff to pre-construction runoff for the 85th percentile storm event, which not only reduces the risk of impact to the receiving water's channel morphology but also provides some protection of water quality.

This General Permit clarifies that its runoff reduction requirements only apply to projects that lie outside of jurisdictions covered by a Standard Urban Storm water Management Plan (SUSMP) (or other more protective) post-construction requirements in either Phase I or Phase II permits.

Figures 3 and 4, below, show the General Permit enrollees (to Order 99-08-DWQ, as of March 10, 2008) overlaid upon a map with SUSMP (or more protective) areas in blue and purple. Areas without blue or purple indicate where the General Permit's runoff reduction requirements would actually apply.

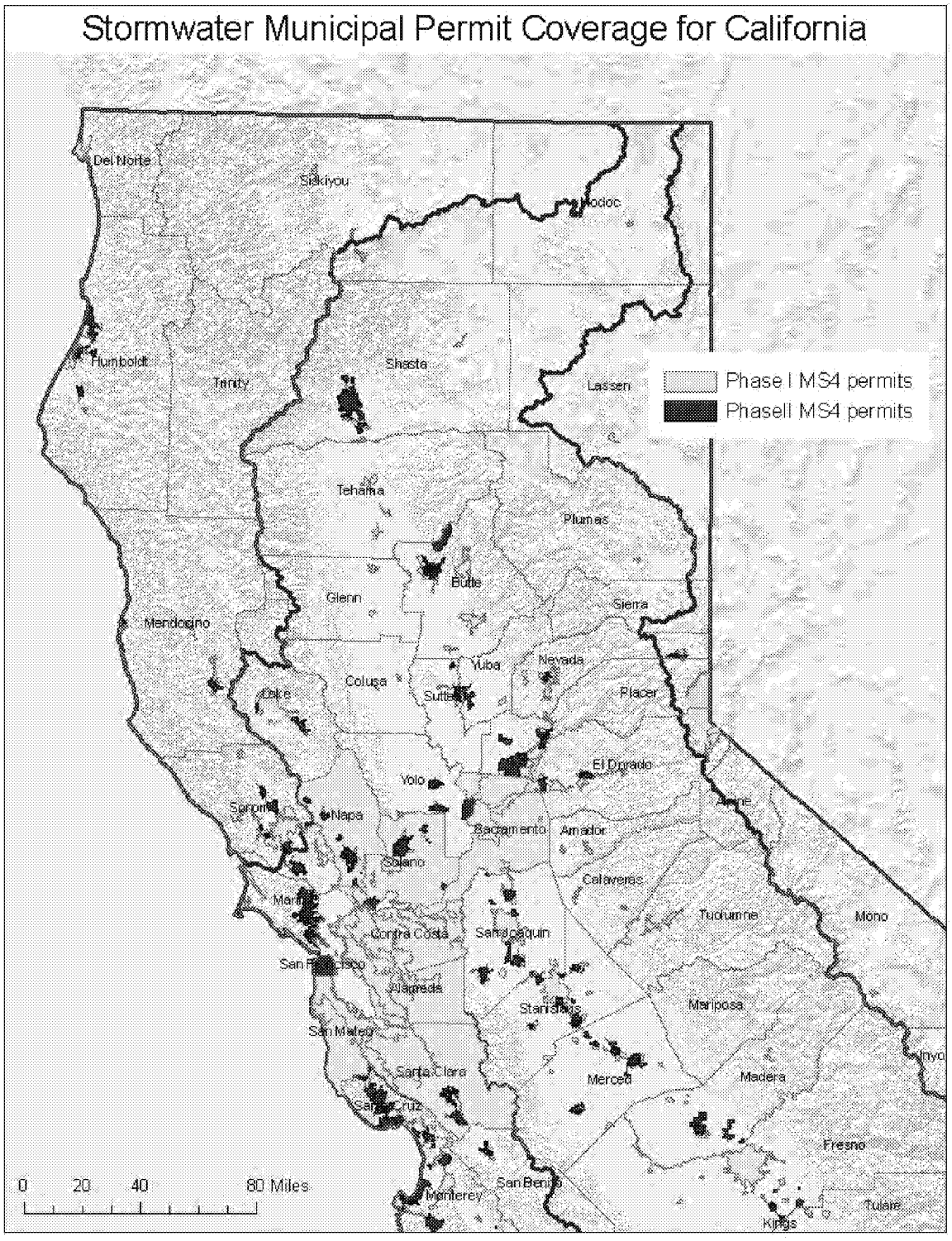

Figure 3 - Northern CA (2009) Counties / Cities With SUSMP-Plus Coverage

Figure 4 - Southern CA (2009) Counties / Cities With SUSMP-Plus Coverage

ED_002781A_00003896-00573

Water Quality:
This General Permit requires dischargers to replicate the pre-project runoff water balance (defined as the amount of rainfall that ends up as runoff) for the smallest storms up to the 85th percentile storm event, or the smallest storm event that generates runoff, whichever is larger. Contemporary storm water management generally routes these flows directly to the drainage system, increasing pollutant loads and potentially causing adverse effects on receiving waters. These smaller water quality events happen much more frequently than larger events and generate much higher pollutant loads on an annual basis. There are other adverse hydrological impacts that result from not designing according to the site's pre-construction water balance. In Maryland, Klein[21] noted that baseflow decreases as the extent of urbanization increases. Ferguson and Suckling[22] noted a similar relation in watersheds in Georgia. On Long Island, Spinello and Simmons[23] noted substantial decreases in base flow in intensely urbanized watersheds.

The permit emphasizes runoff reduction through on-site storm water reuse, interception, evapo-transpiration and infiltration through non-structural controls and conservation design measures (e.g., downspout disconnection, soil quality preservation/enhancement, interceptor trees). Employing these measures close to the source of runoff generation is the easiest and most cost-effective way to comply with the pre-construction water balance standard. Using low-tech runoff reduction techniques close to the source is consistent with a number of recommendations in the literature.[24] In many cases, BMPs implemented close to the source of runoff generation cost less than end-of the pipe measures.[25] Dischargers are given the option of using Appendix 2 to calculate the required runoff volume or a watershed process-based, continuous simulation model such as the EPA's Storm Water Management Model (SWMMM) or Hydrologic Simulation Program Fortran (HSPF). Such methods used by the discharger will be reviewed by the Regional Water Board upon NOT application.

Channel Protection:
In order to address channel protection, a basic understanding of fluvial geomorphic concepts is necessary. A dominant paradigm in fluvial geomorphology holds that streams adjust their channel dimensions (width and depth) in response to long-term changes in sediment supply and bankfull discharge (1.5 to 2 year recurrence interval). The bankfull stage corresponds to the discharge at which channel maintenance is the most effective, that is, the discharge at which the moving sediment, forming or removing bars, forming or changing bends and meanders, and generally doing work that results in the average morphologic characteristics of channels.[26] Lane (1955 as cited in Rosgen 1996[27]) showed the generalized relationship between sediment load, sediment size, stream discharge and stream slope in Figure 5. A change in any one of these variables sets up a series of mutual adjustments in the companion variables with a resulting direct change in the physical characteristics of the stream channel.

---

[21] Klein 1979 as cited in Delaware Department of Natural Resources (DDNR). 2004. Green Technology: The Delaware Urban Runoff Management Approach. Dover, DE. 117 pp.
[22] Ferguson and Suckling 1990 as cited Delaware Department of Natural Resources (DDNR). 2004. Green Technology: The Delaware Urban Runoff Management Approach. Dover, DE. 117 pp.
[23] Center for Watershed Protection (CWP). 2000. The Practice of Watershed Protection: Techniques for protecting our nation's streams, lakes, rivers, and estuaries. Ellicott City, MD. 741 pp.
[24] Bay Area Storm Water Management Agencies Association (BASMAA). 1997. Start at the Source: Residential Site Planning and Design Guidance Manual for Storm Water Quality Protection. Palo Alto, CA;
McCuen, R.H. 2003 Smart Growth: hydrologic perspective. Journal of Professional Issues in Engineering Education and Practice. Vol (129), pp.151-154;
Moglen, G.E. and S. Kim. 2007. Impervious imperviousness-are threshold based policies a good idea? Journal of the American Planning Association, Vol 73 No. 2. pp 161-171.
[25] Delaware Department of natural Resources (DDNR). 2004. Green technology: The Delaware urban Runoff Management Approcah. Dover, DE. 117 pp.
[26] Dunne, T and L.B. Leopold. 1978. Water in Environmental Planning. San Francisco W.H. Freeman and Company
[27] Rosgen. D.L. 1996. Applied River Morphology. Pagosa Springs. Wildland Hydrology

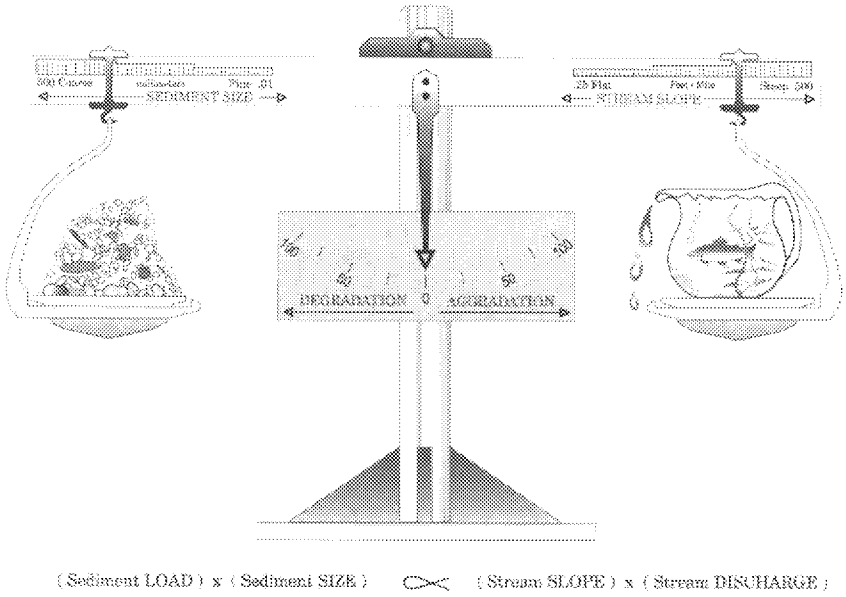

Figure 5 - Schematic of the Lane Relationship

After Lane (1955) as cited in Rosgen (1996)

Stream slope multiplied by stream discharge (the right side of the scale) is essentially an approximation of stream power, a unifying concept in fluvial geomorphology (Bledsoe 1999). Urbanization generally increases stream power and affects the resisting forces in a channel (sediment load and sediment size represented on the left side of the scale).

During construction, sediment loads can increase from 2 to 40,000 times over pre-construction levels.[28] Most of this sediment is delivered to stream channels during large, episodic rain events.[29] This increased sediment load leads to an initial aggradation phase where stream depths may decrease as sediment fills the channel, leading to a decrease in channel capacity and increase in flooding and overbank deposition. A degradation phase initiates after construction is completed.

Schumm et. al (1984) developed a channel evolution model that describes the series of adjustments from initial downcutting, to widening, to establishing new floodplains at lower elevations (Figure 6).

---

[28] Goldman S.J., K. Jackson, and T.A. Bursztynsky. 1986. Erosion and Sediment Control Handbook. McGraw Hill. San Francisco.

[29] Wolman 1967 as cited in Paul, M.P. and J.L. Meyer. 2001. Streams in the Urban Landscape. *Annu. Rev.Ecol. Syst.* 32: 333-365.

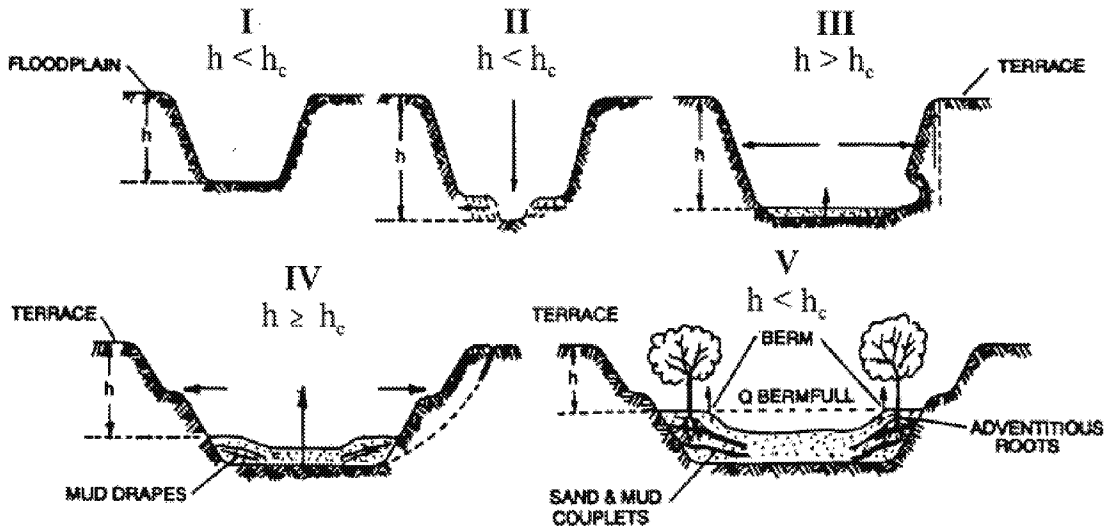

Figure 6 - Channel Changes Associated with Urbanization

After Incised Channel Evolution Sequence in Schumm et. al 1984

Channel incision (Stage II) and widening (Stages III and to a lesser degree, Stage IV) are due to a number of fundamental changes on the landscape. Connected impervious area and compaction of pervious surfaces increase the frequency and volume of bankfull discharges.[30] Increased drainage density (miles of stream length per square mile of watershed) also negatively impacts receiving stream channels.[31] Increased drainage density and hydraulic efficiency leads to an increase in the frequency and volume of bankfull discharges because the time of concentration is shortened. Flows from engineered pipes and channels are also often "sediment starved" and seek to replenish their sediment supply from the channel.

Encroachment of stream channels can also lead to an increase in stream slope, which leads to an increase in stream power. In addition, watershed sediment loads and sediment size (with size generally represented as the median bed and bank particle size, or d_{50}) decrease during urbanization.[32] This means that even if pre- and post-development stream power are the same, more erosion will occur in the post-development stage because the smaller particles are less resistant (provided they are non-cohesive).

---

[30] Booth, D. B. and C. R. Jackson. 1997. Urbanization of Aquatic Systems: Degradation Thresholds, Storm Water Detection, and the Limits of Mitigation. Journal of the American Water Resources Association Vol. 33, No.5, pp. 1077-1089.

[31] May, C.W. 1998. Cumulative effects of urbanization on small streams in the Puget Sound Lowland ecoregion. Conference proceedings from Puget Sound Research '98 held March 12, 13 1998 in Seattle, WA;
Santa Clara Valley Urban Runoff Pollution Prevention Program. 2002. Hydromodification Management Plan Literature Review. 80 pp.

[32] Finkenbine, J.K., D.S. Atwater, and D.S. Mavinic. 2000. Stream health after urbanization. *J. Am. Water Resour. Assoc.* 36:1149-60;
Pizzuto, J.E. W.S. Hession, and M. McBride. 2000. Comparing gravel-bed rivers in paired urban and rural catchments of southeastern Pennsylvania. *Geology* 28:79-82.

As shown in Stages II and III, the channel deepens and widens to accommodate the increased stream power [33] and decrease in sediment load and sediment size. Channels may actually narrow as entrained sediment from incision is deposited laterally in the channel. After incised channels begin to migrate laterally (Stage III), bank erosion begins, which leads to general channel widening.[34] At this point, a majority of the sediment that leaves a drainage area comes from within the channel, as opposed to the background and construction related hillslope contribution. Stage IV is characterized by more aggradation and localized bank instability. Stage V represents a new quasi-equilibrium channel morphology in balance with the new flow and sediment supply regime. In other words, stream power is in balance with sediment load and sediment size.

The magnitude of the channel morphology changes discussed above varies along a stream network as well as with the age of development, slope, geology (sand-bedded channels may cycle through the evolution sequence in a matter of decades whereas clay-dominated channels may take much longer), watershed sediment load and size, type of urbanization, and land use history. It is also dependent on a channel's stage in the channel evolution sequence when urbanization occurs. Management strategies must take into account a channel's stage of adjustment and account for future changes in the evolution of channel form (Stein and Zaleski 2005).[35]

Traditional structural water quality BMPs (e.g. detention basins and other devices used to store volumes of runoff) unless they are highly engineered to provide adequate flow duration control, do not adequately protect receiving waters from accelerated channel bed and bank erosion, do not address post-development increases in runoff volume, and do not mitigate the decline in benthic macroinvertebrate communities in the receiving waters[36] suggest that structural BMPs are not as effective in protecting aquatic communities as a continuous riparian buffer of native vegetation. This is supported by the findings of Zucker and White[37], where instream biological metrics were correlated with the extent of forested buffers.

This General Permit requires dischargers to maintain pre-development drainage densities and times of concentration in order to protect channels and encourages dischargers to implement setbacks to reduce channel slope and velocity changes that can lead to aquatic habitat degradation.

There are a number of other approaches for modeling fluvial systems, including statistical and physical models and simpler stream power models.[38] The use of these models in California is described in Stein and Zaleski (2005).[39] Rather than prescribe a specific one-size-fits-all modeling method in this permit, the State Water Board intends to develop a stream power and channel evolution model-based framework to assess channels and develop a hierarchy of suitable analysis methods and management strategies. In time, this framework may become a State Water Board water quality control policy.

---

[33] Hammer 1973 as cited in Delaware Department of Natural Resources (DDNR). 2004. Green Technology: The Delaware Urban Runoff Management Approach. Dover, DE. 117 pp;
Booth, D.B. 1990. Stream Channel Incision Following Drainage Basin Urbanization. *Water Resour. Bull.* 26:407-417.

[34] Trimble, S.W. 1997. Contribution of Stream Channel Erosion to Sediment Yield from an Urbanizing Watershed. *Science*: Vol. 278 (21), pp. 1442-1444.

[35] Stein, E.S. and S. Zaleski. 2005.Managing runoff to protect natural stream: the latest developments on investigation and management of hydromodification in California. Southern California Coastal Water Research Project Technical Report 475. 26 pp.

[36] Horner, R.R. 2006. Investigation of the Feasibility and Benefits of Low-Impact Site Design Practices (LID) for the San Diego Region. Available at: http://www.projectcleanwater.org/pdf/permit/case-study_lid.pdf.

[37] Delaware Department of Natural Resources (DDNR). 2004. Green Technology: The Delaware Urban Runoff Management Approach. Dover, DE. 117 pp.

[38] Finlayson, D.P. and D.R. Montgomery. 2003. Modeling large-scale fluvial erosion in geographic information systems. Geomorphology (53), pp. 147-164).

[39] Stein, E.S. and S. Zaleski. 2005.Managing runoff to protect natural stream: the latest developments on investigation and management of hydromodification in California. Southern California Coastal Water Research Project Technical Report 475. 26 pp.

Permit Linkage to Overbank and Extreme Flood Protection
Site design BMPs (e.g. rooftop and impervious disconnection, vegetated swales, setbacks and buffers) filter and settle out pollutants and provide for more infiltration than is possible for traditional centralized structural BMPs placed at the lowest point in a site. They provide source control for runoff and lead to a reduction in pollutant loads. When implemented, they also help reduce the magnitude and volume of larger, less frequent storm events (e.g., 10-yr, 24-hour storm and larger), thereby reducing the need for expensive flood control infrastructure. Nonstructural BMPs can also be a landscape amenity, instead of a large isolated structure requiring substantial area for ancillary access, buffering, screening and maintenance facilities.[25] The multiple benefits of using non-structural benefits will be critically important as the state's population increases and imposes strains upon our existing water resources.

Maintaining predevelopment drainage densities and times of concentration will help reduce post-development peak flows and volumes in areas not covered under a municipal permit. The most effective way to preserve drainage areas and maximize time of concentration is to implement landform grading, incorporate site design BMPs and implement distributed structural BMPs (e.g., bioretention cells, rain gardens, rain cisterns).

M. Storm Water Pollution Prevention Plans

USEPA's Construction General Permit requires that qualified personnel conduct inspections. USEPA defines qualified personnel as "a person knowledgeable in the principles and practice of erosion and sediment controls who possesses the skills to assess conditions at the construction site that could impact storm water quality and to assess the effectiveness of any sediment and erosion control measures selected to control the quality of storm water discharges from the construction activity."[40] USEPA also suggests that qualified personnel prepare SWPPPs and points to numerous states that require certified professionals to be on construction sites at all times. States that currently have certification programs are Washington, Georgia, Florida, Delaware, Maryland, and New Jersey. The Permit 99-08-DWQ did not require that qualified personnel prepare SWPPPs or conduct inspections. However, to ensure that water quality is being protected, this General Permit requires that all SWPPPs be written, amended, and certified by a Qualified SWPPP Developer. A Qualified SWPPP Developer must possess one of the eight certifications and or registrations specified in this General Permit and effective two years after the adoption date of this General Permit, must have attended a State Water Board-sponsored or approved Qualified SWPPP Developer training course. Table 9 provides an overview of the criteria used in determining qualified certification titles for a QSD and QSP.

---

40 US Environmental Protection Agency. Stormwater Pollution Prevention Plans for Construction Activities. <http://cfpub.epa.gov/npdes/stormwater/swppp.cfm> and <http://www.epa.gov/npdes/pubs/sw_swppp_guide.pdf>.

Table 9 - Qualified SWPPP Developer/ Qualified SWPPP Practitioner Certification Criteria

Certification/ Title	Registered By	QSD/QSP	Certification Criteria
Professional Civil Engineer	California	Both	1. Approval Process 2. Code of Ethics 3. Accountability 4. Pre-requisites
Professional Geologist or Engineering Geologist	California	Both	1. Approval Process 2. Code of Ethics 3. Accountability 4. Pre-requisites
Landscape Architect	California	Both	1. Approval Process 2. Code of Ethics 3. Accountability 4. Pre-requisites
Professional Hydrologist	American Institute of Hydrology	Both	1. Approval Process 2. Code of Ethics 3. Accountability 4. Pre-requisites
Certified Professional in Erosion and Sediment Control™ (CPESC)	Enviro Cert International Inc.	Both	1. Approval Process 2. Code of Ethics 3. Accountability 4. Pre-requisites 5. Continuing Education
Certified Inspector of Sediment and Erosion Control™ (CISEC)	Certified Inspector of Sediment and Erosion Control, Inc.	QSP	1. Approval Process 2. Code of Ethics 3. Accountability 4. Pre-requisites 5. Continuing Education
Certified Erosion, Sediment and Storm Water Inspector™ (CESSWI)	Enviro Cert International Inc.	QSP	1. Approval Process 2. Code of Ethics 3. Accountability 4. Pre-requisites 5. Continuing Education
Certified Professional in Storm Water Quality™ (CPSWQ)	Enviro Cert International Inc.	Both	1. Approval Process 2. Code of Ethics 3. Accountability 4. Pre-requisites 5. Continuing Education

The previous versions of the General Permit required development and implementation of a SWPPP as the primary compliance mechanism. The SWPPP has two major objectives: (1) to help identify the sources of sediment and other pollutants that affect the quality of storm water discharges; and (2) to describe and ensure the implementation of BMPs to reduce or eliminate sediment and other pollutants in storm water and non-storm water discharges. The SWPPP must include BMPs that address source control, BMPs that address pollutant control, and BMPs that address treatment control.

This General Permit shifts some of the measures that were covered by this general requirement to specific permit requirements, each individually enforceable as a permit term. This General Permit emphasizes the use of appropriately selected, correctly installed and maintained pollution reduction BMPs. This approach provides the flexibility necessary to establish BMPs that can effectively address source control of pollutants during changing construction activities. These specific requirements also improve both the clarity and the enforceability of the General Permit so that the dischargers understand, and the public can determine whether the discharges are in compliance with, permit requirements.

The SWPPP must be implemented at the appropriate level to protect water quality at all times throughout the life of the project. The SWPPP must remain on the site during construction activities, commencing with the initial mobilization and ending with the termination of coverage under the General Permit. For LUPs the discharger shall make the SWPPP available at the construction site during working hours while construction is occurring and shall be made available upon request by a State or Municipal inspector. When the original SWPPP is retained by a crewmember in a construction vehicle and is not currently at the construction site, current copies of the BMPs and map/drawing will be left with the field crew and the original SWPPP shall be made available via a request by radio or telephone. Once construction activities are complete, until stabilization is achieved, the SWPPP shall be available from the SWPPP contact listed in the PRDs

A SWPPP must be appropriate for the type and complexity of a project and will be developed and implemented to address project specific conditions. Some projects may have similarities or complexities, yet each project is unique in its progressive state that requires specific description and selection of BMPs needed to address all possible generated pollutants

N. Regional Water Board Authorities

Because this General Permit will be issued to thousands of construction sites across the State, the Regional Water Boards retain discretionary authority over certain issues that may arise from the discharges in their respective regions. This General Permit does not grant the Regional Water Boards any authority they do not otherwise have; rather, it merely emphasizes that the Regional Water Boards can take specific actions related to this General Permit. For example, the Regional Water Boards will be enforcing this General Permit and may need to adjust some requirements for a discharger based on the discharger's compliance history.

Linda S. Adams
Secretary for Environmental Protection

State Water Resources Control Board

Division of Water Quality
1001 I Street • Sacramento, California 95814 • (916) 341-5455
Mailing Address: P.O. Box 100 • Sacramento, California • 95812-0100
Fax (916) 341-5463 • http://www.waterboards.ca.gov

Arnold Schwarzenegger
Governor

NATIONAL POLLUTANT DISCHARGE ELIMINATION SYSTEM (NPDES)
GENERAL PERMIT FOR
STORM WATER DISCHARGES
ASSOCIATED WITH CONSTRUCTION AND LAND DISTURBANCE
ACTIVITIES

ORDER NO. 2009-0009-DWQ
NPDES NO. **CAS000002**

This Order was adopted by the State Water Resources Control Board on:	**September 2, 2009**
This Order shall become effective on:	**July 1, 2010**
This Order shall expire on:	**September 2, 2014**

IT IS HEREBY ORDERED, that this Order supersedes Order No. 99-08-DWQ [as amended by Order No. 2010-0014-DWQ] except for enforcement purposes. The Discharger shall comply with the requirements in this Order to meet the provisions contained in Division 7 of the California Water Code (commencing with section 13000) and regulations adopted thereunder, and the provisions of the federal Clean Water Act and regulations and guidelines adopted thereunder.

I, Jeanine Townsend, Clerk to the Board, do hereby certify that this Order with all attachments is a full, true, and correct copy of an Order adopted by the State Water Resources Control Board, on September 2, 2009.

AYE: Vice Chair Frances Spivy-Weber
Board Member Arthur G. Baggett, Jr.
Board Member Tam M. Doduc

NAY: Chairman Charles R. Hoppin

ABSENT: None

ABSTAIN: None

Jeanine Townsend

Jeanine Townsend
Clerk to the Board

Linda S. Adams
Secretary for Environmental Protection

State Water Resources Control Board

Division of Water Quality
1001 I Street • Sacramento, California 95814 • (916) 341-5455
Mailing Address: P.O. Box 100 • Sacramento, California • 95812-0100
Fax (916) 341-5463 • http://www.waterboards.ca.gov

Arnold Schwarzenegger
Governor

NATIONAL POLLUTANT DISCHARGE ELIMINATION SYSTEM (NPDES) GENERAL PERMIT FOR STORM WATER DISCHARGES ASSOCIATED WITH CONSTRUCTION AND LAND DISTURBANCE ACTIVITIES

ORDER NO. 2010-0014-DWQ
NPDES NO. CAS000002

Order No. 2009-0009-DWQ was adopted by the State Water Resources Control Board on:	**September 2, 2009**
Order No. 2009-0009-DWQ became effective on:	**July 1, 2010**
Order No. 2009-0009-DWQ shall expire on:	**September 2, 2014**
This Order, which amends Order No. 2009-0009-DWQ, was adopted by the State Water Resources Control Board on:	**November 16, 2010**
This Order shall become effective on:	**February 14, 2011**

IT IS HEREBY ORDERED that this Order amends Order No. 2009-0009-DWQ. Additions to Order No. 2009-0009-DWQ are reflected in blue-underline text and deletions are reflected in ~~red-strikeout~~ text.

IT IS FURTHER ORDERED that staff are directed to prepare and post a conformed copy of Order No. 2009-0009-DWQ incorporating the revisions made by this Order.

I, Jeanine Townsend, Clerk to the Board, do hereby certify that this Order with all attachments is a full, true, and correct copy of an Order adopted by the State Water Resources Control Board, on **November 16, 2010.**

AYE: Chairman Charles R. Hoppin
Vice Chair Frances Spivy-Weber
Board Member Arthur G. Baggett, Jr.
Board Member Tam M. Doduc

NAY: None

ABSENT: None

ABSTAIN: None

Jeanine Townsend

Jeanine Townsend
Clerk to the Board

TABLE OF CONTENTS

I. FINDINGS 1
II. CONDITIONS FOR PERMIT COVERAGE 14
III. DISCHARGE PROHIBITIONS 20
IV. SPECIAL PROVISIONS 22
V. EFFLUENT STANDARDS 28
VI. RECEIVING WATER LIMITATIONS 31
VII. TRAINING QUALIFICATIONS AND CERTIFICATION REQUIREMENTS 32
VIII. RISK DETERMINATION 33
IX. RISK LEVEL 1 REQUIREMENTS 34
X. RISK LEVEL 2 REQUIREMENTS 34
XI. RISK LEVEL 3 REQUIREMENTS 34
XII. ACTIVE TREATMENT SYSTEMS (ATS) 34
XIII. POST-CONSTRUCTION STANDARDS 35
XIV. SWPPP REQUIREMENTS 37
XV. REGIONAL WATER BOARD AUTHORITIES 38
XVI. ANNUAL REPORTING REQUIREMENTS 39

LIST OF ATTACHMENTS

Attachment A – Linear Underground/Overhead Requirements
Attachment A.1 – LUP Type Determination
Attachment A.2 – LUP Permit Registration Documents
Attachment B – Permit Registration Documents
Attachment C – Risk Level 1 Requirements
Attachment D – Risk Level 2 Requirements
Attachment E – Risk Level 3 Requirements
Attachment F – Active Treatment System (ATS) Requirements

LIST OF APPENDICES

Appendix 1 – Risk Determination Worksheet
Appendix 2 – Post-Construction Water Balance Performance Standard
Appendix 2.1 – Post-Construction Water Balance Performance Standard Spreadsheet
Appendix 3 – Bioassessment Monitoring Guidelines
Appendix 4 – Adopted/Implemented Sediment TMDLs
Appendix 5 – Glossary
Appendix 6 – Acronyms
Appendix 7 – State and Regional Water Resources Control Board Contacts

STATE WATER RESOURCES CONTROL BOARD
ORDER NO. 2009-0009-DWQ
[AS AMENDED BY ORDER NO. 2010-0014-DWQ]
NATIONAL POLLUTANT DISCHARGE ELIMINATION SYSTEM
GENERAL PERMIT NO. CAS000002

WASTE DISCHARGE REQUIREMENTS
FOR
DISCHARGES OF STORM WATER RUNOFF ASSOCIATED WITH
CONSTRUCTION AND LAND DISTURBANCE ACTIVITIES

I. FINDINGS

A. General Findings

The State Water Resources Control Board (State Water Board) finds that:

1. The federal Clean Water Act (CWA) prohibits certain discharges of storm water containing pollutants except in compliance with a National Pollutant Discharge Elimination System (NPDES) permit (Title 33 United States Code (U.S.C.) §§ 1311 and 1342(p); also referred to as Clean Water Act (CWA) §§ 301 and 402(p)). The U.S. Environmental Protection Agency (U.S. EPA) promulgates federal regulations to implement the CWA's mandate to control pollutants in storm water runoff discharges. (Title 40 Code of Federal Regulations (C.F.R.) Parts 122, 123, and 124). The federal statutes and regulations require discharges to surface waters comprised of storm water associated with construction activity, including demolition, clearing, grading, and excavation, and other land disturbance activities (except operations that result in disturbance of less than one acre of total land area and which are not part of a larger common plan of development or sale), to obtain coverage under an NPDES permit. The NPDES permit must require implementation of Best Available Technology Economically Achievable (BAT) and Best Conventional Pollutant Control Technology (BCT) to reduce or eliminate pollutants in storm water runoff. The NPDES permit must also include additional requirements necessary to implement applicable water quality standards.

2. This General Permit authorizes discharges of storm water associated with construction activity so long as the dischargers comply with all requirements, provisions, limitations and prohibitions in the permit. In addition, this General Permit regulates the discharges of storm water associated with construction activities from all Linear

Underground/Overhead Projects resulting in the disturbance of greater than or equal to one acre (Attachment A).

3. This General Permit regulates discharges of pollutants in storm water associated with construction activity (storm water discharges) to waters of the United States from construction sites that disturb one or more acres of land surface, or that are part of a common plan of development or sale that disturbs more than one acre of land surface.

4. This General Permit does not preempt or supersede the authority of local storm water management agencies to prohibit, restrict, or control storm water discharges to municipal separate storm sewer systems or other watercourses within their jurisdictions.

5. This action to adopt a general NPDES permit is exempt from the provisions of Chapter 3 of the California Environmental Quality Act (CEQA) (Public Resources Code Section 21100, et seq.), pursuant to Section 13389 of the California Water Code.

6. Pursuant to 40 C.F.R. § 131.12 and State Water Board Resolution No. 68-16,[1] which incorporates the requirements of § 131.12 where applicable, the State Water Board finds that discharges in compliance with this General Permit will not result in the lowering of water quality standards, and are therefore consistent with those provisions. Compliance with this General Permit will result in improvements in water quality.

7. This General Permit serves as an NPDES permit in compliance with CWA § 402 and will take effect on July 1, 2010 by the State Water Board provided the Regional Administrator of the U.S. EPA has no objection. If the U.S. EPA Regional Administrator objects to its issuance, the General Permit will not become effective until such objection is withdrawn.

8. Following adoption and upon the effective date of this General Permit, the Regional Water Quality Control Boards (Regional Water Boards) shall enforce the provisions herein.

9. Regional Water Boards establish water quality standards in Basin Plans. The State Water Board establishes water quality standards in various statewide plans, including the California Ocean Plan. U.S. EPA establishes water quality standards in the National Toxic Rule (NTR) and the California Toxic Rule (CTR).

[1] Resolution No. 68-16 generally requires that existing water quality be maintained unless degradation is justified based on specific findings.

10. This General Permit does not authorize discharges of fill or dredged material regulated by the U.S. Army Corps of Engineers under CWA § 404 and does not constitute a waiver of water quality certification under CWA § 401.

11. The primary storm water pollutant at construction sites is excess sediment. Excess sediment can cloud the water, which reduces the amount of sunlight reaching aquatic plants, clog fish gills, smother aquatic habitat and spawning areas, and impede navigation in our waterways. Sediment also transports other pollutants such as nutrients, metals, and oils and greases.

12. Construction activities can impact a construction site's runoff sediment supply and transport characteristics. These modifications, which can occur both during and after the construction phase, are a significant cause of degradation of the beneficial uses established for water bodies in California. Dischargers can avoid these effects through better construction site design and activity practices.

13. This General Permit recognizes four distinct phases of construction activities. The phases are Grading and Land Development Phase, Streets and Utilities Phase, Vertical Construction Phase, and Final Landscaping and Site Stabilization Phase. Each phase has activities that can result in different water quality effects from different water quality pollutants. This General Permit also recognizes inactive construction as a category of construction site type.

14. Compliance with any specific limits or requirements contained in this General Permit does not constitute compliance with any other applicable requirements.

15. Following public notice in accordance with State and Federal laws and regulations, the State Water Board heard and considered all comments and testimony in a public hearing on 06/03/2009. The State Water Board has prepared written responses to all significant comments.

16. Construction activities obtaining coverage under the General Permit may have multiple discharges subject to requirements that are specific to general, linear, and/or active treatment system discharge types.

17. The State Water Board may reopen the permit if the U.S. EPA adopts a final effluent limitation guideline for construction activities.

ED_002781A_00003896-00586

B. Activities Covered Under the General Permit

18. Any construction or demolition activity, including, but not limited to, clearing, grading, grubbing, or excavation, or any other activity that results in a land disturbance of equal to or greater than one acre.

19. Construction activity that results in land surface disturbances of less than one acre if the construction activity is part of a larger common plan of development or the sale of one or more acres of disturbed land surface.

20. Construction activity related to residential, commercial, or industrial development on lands currently used for agriculture including, but not limited to, the construction of buildings related to agriculture that are considered industrial pursuant to U.S. EPA regulations, such as dairy barns or food processing facilities.

21. Construction activity associated with Linear Underground/Overhead Utility Projects (LUPs) including, but not limited to, those activities necessary for the installation of underground and overhead linear facilities (e.g., conduits, substructures, pipelines, towers, poles, cables, wires, connectors, switching, regulating and transforming equipment and associated ancillary facilities) and include, but are not limited to, underground utility mark-out, potholing, concrete and asphalt cutting and removal, trenching, excavation, boring and drilling, access road and pole/tower pad and cable/wire pull station, substation construction, substructure installation, construction of tower footings and/or foundations, pole and tower installations, pipeline installations, welding, concrete and/or pavement repair or replacement, and stockpile/borrow locations.

22. Discharges of sediment from construction activities associated with oil and gas exploration, production, processing, or treatment operations or transmission facilities.[2]

23. Storm water discharges from dredge spoil placement that occur outside of U.S. Army Corps of Engineers jurisdiction (upland sites) and that disturb one or more acres of land surface from construction activity are covered by this General Permit. Construction sites that intend to disturb one or more acres of land within the jurisdictional boundaries of

[2] Pursuant to the Ninth Circuit Court of Appeals' decision in *NRDC v. EPA* (9th Cir. 2008) 526 F.3d 591, and subsequent denial of the U.S. EPA's petition for reconsideration in November 2008, oil and gas construction activities discharging storm water contaminated only with sediment are no longer exempt from the NPDES program.

ED_002781A_00003896-00587

a CWA § 404 permit should contact the appropriate Regional Water Board to determine whether this permit applies to the site.

C. Activities Not Covered Under the General Permit

24. Routine maintenance to maintain original line and grade, hydraulic capacity, or original purpose of the facility.

25. Disturbances to land surfaces solely related to agricultural operations such as disking, harrowing, terracing and leveling, and soil preparation.

26. Discharges of storm water from areas on tribal lands; construction on tribal lands is regulated by a federal permit.

27. Construction activity and land disturbance involving discharges of storm water within the Lake Tahoe Hydrologic Unit. The Lahontan Regional Water Board has adopted its own permit to regulate storm water discharges from construction activity in the Lake Tahoe Hydrologic Unit (Regional Water Board 6SLT). Owners of construction sites in this watershed must apply for the Lahontan Regional Water Board permit rather than the statewide Construction General Permit.

28. Construction activity that disturbs less than one acre of land surface, and that is not part of a larger common plan of development or the sale of one or more acres of disturbed land surface.

29. Construction activity covered by an individual NPDES Permit for storm water discharges.

30. Discharges from small (1 to 5 acre) construction activities with an approved Rainfall Erosivity Waiver authorized by U.S. EPA Phase II regulations certifying to the State Board that small construction activity will occur only when the Rainfall Erosivity Factor is less than 5 ("R" in the Revised Universal Soil Loss Equation).

31. Landfill construction activity that is subject to the Industrial General Permit.

32. Construction activity that discharges to Combined Sewer Systems.

33. Conveyances that discharge storm water runoff combined with municipal sewage.

34. Discharges of storm water identified in CWA § 402(*l*)(2), 33 U.S.C. § 1342(*l*)(2).

35. Discharges occurring in basins that are not tributary or hydrologically connected to waters of the United States (for more information contact your Regional Water Board).

D. Obtaining and Modifying General Permit Coverage

36. This General Permit requires all dischargers to electronically file all Permit Registration Documents (PRDs), Notices of Termination (NOT), changes of information, annual reporting, and other compliance documents required by this General Permit through the State Water Board's Storm water Multi-Application and Report Tracking System (SMARTS) website.

37. Any information provided to the Regional Water Board shall comply with the Homeland Security Act and any other federal law that concerns security in the United States; any information that does not comply should not be submitted.

38. This General Permit grants an exception from the Risk Determination requirements for existing sites covered under Water Quality Orders No. 99-08-DWQ, and No. 2003-0007-DWQ. For certain sites, adding additional requirements may not be cost effective. Construction sites covered under Water Quality Order No. 99-08-DWQ shall obtain permit coverage at the Risk Level 1. LUPs covered under Water Quality Order No. 2003-0007-DWQ shall obtain permit coverage as a Type 1 LUP. The Regional Water Boards have the authority to require Risk Determination to be performed on sites currently covered under Water Quality Orders No. 99-08-DWQ and No. 2003-0007-DWQ where they deem it necessary. The State Water Board finds that there are two circumstances when it may be appropriate for the Regional Water Boards to require a discharger that had filed an NOI under State Water Board Order No. 99-08-DWQ to recalculate the site's risk level. These circumstances are: (1) when the discharger has a demonstrated history of noncompliance with State Water Board Order No. 99-08-DWQ or; (2) when the discharger's site poses a significant risk of causing or contributing to an exceedance of a water quality standard without the implementation of the additional Risk Level 2 or 3 requirements.

E. Prohibitions

39. All discharges are prohibited except for the storm water and non-storm water discharges specifically authorized by this General Permit or another NPDES permit. Non-storm water discharges include a wide variety of sources, including improper dumping, spills, or leakage from storage tanks or transfer areas. Non-storm water discharges may

contribute significant pollutant loads to receiving waters. Measures to control spills, leakage, and dumping, and to prevent illicit connections during construction must be addressed through structural as well as non-structural Best Management Practices (BMPs)[3]. The State Water Board recognizes, however, that certain non-storm water discharges may be necessary for the completion of construction.

40. This General Permit prohibits all discharges which contain a hazardous substance in excess of reportable quantities established in 40 C.F.R. §§ 117.3 and 302.4, unless a separate NPDES Permit has been issued to regulate those discharges.

41. This General Permit incorporates discharge prohibitions contained in water quality control plans, as implemented by the State Water Board and the nine Regional Water Boards.

42. Pursuant to the Ocean Plan, discharges to Areas of Special Biological Significance (ASBS) are prohibited unless covered by an exception that the State Water Board has approved.

43. This General Permit prohibits the discharge of any debris[4] from construction sites. Plastic and other trash materials can cause negative impacts to receiving water beneficial uses. The State Water Board encourages the use of more environmentally safe, biodegradable materials on construction sites to minimize the potential risk to water quality.

F. Training

44. In order to improve compliance with and to maintain consistent enforcement of this General Permit, all dischargers are required to appoint two positions - the Qualified SWPPP Developer (QSD) and the Qualified SWPPP Practitioner (QSP) - who must obtain appropriate training. Together with the key stakeholders, the State and Regional Water Boards are leading the development of this curriculum through a collaborative organization called The Construction General Permit (CGP) Training Team.

45. The Professional Engineers Act (Bus. & Prof. Code section 6700, et seq.) requires that all engineering work must be performed by a California licensed engineer.

---

[3] BMPs are scheduling of activities, prohibitions of practices, maintenance procedures, and other management practices to prevent or reduce the discharge of pollutants to waters of the United States. BMPs also include treatment requirements, operating procedures, and practice to control site runoff, spillage or leaks, sludge or waste disposal, or drainage from raw material storage.

[4] Litter, rubble, discarded refuse, and remains of destroyed inorganic anthropogenic waste.

G. Determining and Reducing Risk

46. The risk of accelerated erosion and sedimentation from wind and water depends on a number of factors, including proximity to receiving water bodies, climate, topography, and soil type.

47. This General Permit requires dischargers to assess the risk level of a site based on both sediment transport and receiving water risk. This General Permit contains requirements for Risk Levels 1, 2 and 3, and LUP Risk Type 1, 2, and 3 (Attachment A). Risk levels are established by determining two factors: first, calculating the site's sediment risk; and second, receiving water risk during periods of soil exposure (i.e. grading and site stabilization). Both factors are used to determine the site-specific Risk Level(s). LUPs can be determined to be Type 1 based on the flowchart in Attachment A.1.

48. Although this General Permit does not mandate specific setback distances, dischargers are encouraged to set back their construction activities from streams and wetlands whenever feasible to reduce the risk of impacting water quality (e.g., natural stream stability and habitat function). Because there is a reduced risk to receiving waters when setbacks are used, this General Permit gives credit to setbacks in the risk determination and post-construction storm water performance standards. The risk calculation and runoff reduction mechanisms in this General Permit are expected to facilitate compliance with any Regional Water Board and local agency setback requirements, and to encourage voluntary setbacks wherever practicable.

49. Rain events can occur at any time of the year in California. Therefore, a Rain Event Action Plan (REAP) is necessary for Risk Level 2 and 3 traditional construction projects (LUPs exempt) to ensure that active construction sites have adequate erosion and sediment controls implemented prior to the onset of a storm event, even if construction is planned only during the dry season.

50. Soil particles smaller than 0.02 millimeters (mm) (i.e., finer than medium silt) do not settle easily using conventional measures for sediment control (i.e., sediment basins). Given their long settling time, dislodging these soils results in a significant risk that fine particles will be released into surface waters and cause unacceptable downstream impacts. If operated correctly, an Active Treatment System (ATS[5]) can prevent or reduce the release of fine particles from construction sites.

[5] An ATS is a treatment system that employs chemical coagulation, chemical flocculation, or electro coagulation in order to reduce turbidity caused by fine suspended sediment.

Use of an ATS can effectively reduce a site's risk of impacting receiving waters.

51. Dischargers located in a watershed area where a Total Maximum Daily Load (TMDL) has been adopted or approved by the Regional Water Board or U.S. EPA may be required by a separate Regional Water Board action to implement additional BMPs, conduct additional monitoring activities, and/or comply with an applicable waste load allocation and implementation schedule. Such dischargers may also be required to obtain an individual Regional Water Board permit specific to the area.

H. Effluent Standards

52. The State Water Board convened a blue ribbon panel of storm water experts that submitted a report entitled, "The Feasibility of Numeric Effluent Limits Applicable to Discharges of Storm Water Associated with Municipal, Industrial and Construction Activities," dated June 19, 2006. The panel concluded that numeric limits or action levels are technically feasible to control construction storm water discharges, provided that certain conditions are considered. The panel also concluded that numeric effluent limitations (NELs) are feasible for discharges from construction sites that utilize an ATS. The State Water Board has incorporated the expert panel's suggestions into this General Permit, which includes both numeric action levels (NALs) and NELs for pH and turbidity, and special numeric limits for ATS discharges.

Numeric Effluent Limitations

53. Discharges of storm water from construction activities may become contaminated from alkaline construction materials resulting in high pH (greater than pH 7). Alkaline construction materials include, but are not limited to, hydrated lime, concrete, mortar, cement kiln dust (CKD), Portland cement treated base (CTB), fly ash, recycled concrete, and masonry work. This General Permit includes an NEL for pH (6.0-9.0) that applies only at sites that exhibit a "high risk of high pH discharge." A "high risk of high pH discharge" can occur during the complete utilities phase, the complete vertical build phase, and any portion of any phase where significant amounts of materials are placed directly on the land at the site in a manner that could result in significant alterations to the background pH of any discharges.

54. For Risk Level 3 discharges, this General Permit establishes technology-based, numeric effluent limitations (NELs) for turbidity of 500 NTU. Exceedances of the turbidity NEL constitutes a violation of this General Permit.

55. This General Permit establishes a 5 year, 24 hour (expressed in inches of rainfall) Compliance Storm Event exemption from the technology-based NELs for Risk Level 3 dischargers.

Determining Compliance with Numeric Limitations

56. This General Permit sets a pH NAL of 6.5 to 8.5, and a turbidity NAL of 250 NTU. The purpose of the NAL and its associated monitoring requirement is to provide operational information regarding the performance of the measures used at the site to minimize the discharge of pollutants and to protect beneficial uses and receiving waters from the adverse effects of construction-related storm water discharges. The NALs in this General Permit for pH and turbidity are not directly enforceable and do not constitute NELs.

57. This General Permit requires dischargers with NAL exceedances to immediately implement additional BMPs and revise their Storm Water Pollution Prevention Plans (SWPPPs) accordingly to either prevent pollutants and authorized non-storm water discharges from contaminating storm water, or to substantially reduce the pollutants to levels consistently below the NALs. NAL exceedances are reported in the State Water Boards SMARTS system, and the discharger is required to provide an NAL Exceedance Report when requested by a Regional Water Board.

58. If run-on is caused by a forest fire or any other natural disaster, then NELs do not apply.

59. Exceedances of the NELs are a violation of this Permit. This General Permit requires dischargers with NEL exceedances to implement additional monitoring, BMPs, and revise their SWPPPs accordingly. Dischargers are required to notify the State and Regional Water Boards of the violation through the State Water Boards SMARTs system, and provide an NEL Violation Report sharing additional information concerning the NEL exceedance.

I. Receiving Water Limitations

60. This General Permit requires all enrolled dischargers to determine the receiving waters potentially affected by their discharges and to comply with all applicable water quality standards, including any more stringent standards applicable to a water body.

J. Sampling, Monitoring, Reporting and Record Keeping

61. Visual monitoring of storm water and non-storm water discharges is required for all sites subject to this General Permit.

62. Records of all visual monitoring inspections are required to remain on-site during the construction period and for a minimum of three years.

63. For all Risk Level 3 and Risk Level 2 sites, this General Permit requires effluent monitoring for pH and turbidity. Sampling, analysis and monitoring requirements for effluent monitoring for pH and turbidity are contained in this General Permit.

64. Risk Level 3 sites in violation of the Numeric Effluent Limitations contained in this General Permit and with direct discharges to receiving water are required to conduct receiving water monitoring.

65. For Risk Level 3 sites larger than 30 acres and with direct discharges to receiving waters, this General Permit requires bioassessment sampling before and after site completion to determine if significant degradation to the receiving water's biota has occurred. Bioassessment sampling guidelines are contained in this General Permit.

66. A summary and evaluation of the sampling and analysis results will be submitted in the Annual Reports.

67. This General Permit contains sampling, analysis and monitoring requirements for non-visible pollutants at all sites subject to this General Permit.

68. Compliance with the General Permit relies upon dischargers to electronically self-report any discharge violations and to comply with any Regional Water Board enforcement actions.

69. This General Permit requires that all dischargers maintain a paper or electronic copy of all required records for three years from the date generated or date submitted, whichever is last. These records must be available at the construction site until construction is completed. For LUPs, these documents may be retained in a crew member's vehicle and made available upon request.

K. Active Treatment System (ATS) Requirements

70. Active treatment systems add chemicals to facilitate flocculation, coagulation and filtration of suspended sediment particles. The uncontrolled release of these chemicals to the environment can negatively affect the beneficial uses of receiving waters and/or degrade water quality (e.g., acute and chronic toxicity). Additionally, the batch storage and treatment of storm water through an ATS' can potentially

cause physical impacts on receiving waters if storage volume is inadequate or due to sudden releases of the ATS batches and improperly designed outfalls.

71. If designed, operated and maintained properly an ATS can achieve very high removal rates of suspended sediment (measured as turbidity), albeit at sometimes significantly higher costs than traditional erosion/sediment control practices. As a result, this General Permit establishes NELs consistent with the expected level of typical ATS performance.

72. This General Permit requires discharges of storm water associated with construction activity that undergo active treatment to comply with special operational and effluent limitations to ensure that these discharges do not adversely affect the beneficial uses of the receiving waters or cause degradation of their water quality.

73. For ATS discharges, this General Permit establishes technology-based NELs for turbidity.

74. This General Permit establishes a 10 year, 24 hour (expressed in inches of rainfall) Compliance Storm Event exemption from the technology-based numeric effluent limitations for ATS discharges. Exceedances of the ATS turbidity NEL constitutes a violation of this General Permit.

L. Post-Construction Requirements

75. This General Permit includes performance standards for post-construction that are consistent with State Water Board Resolution No. 2005-0006, "Resolution Adopting the Concept of Sustainability as a Core Value for State Water Board Programs and Directing Its Incorporation," and 2008-0030, "Requiring Sustainable Water Resources Management." The requirement for all construction sites to match pre-project hydrology will help ensure that the physical and biological integrity of aquatic ecosystems are sustained. This "runoff reduction" approach is analogous in principle to Low Impact Development (LID) and will serve to protect related watersheds and waterbodies from both hydrologic-based and pollution impacts associated with the post-construction landscape.

76. LUP projects are not subject to post-construction requirements due to the nature of their construction to return project sites to pre-construction conditions.

M. Storm Water Pollution Prevention Plan Requirements

77. This General Permit requires the development of a site-specific SWPPP. The SWPPP must include the information needed to demonstrate compliance with all requirements of this General Permit, and must be kept on the construction site and be available for review. The discharger shall ensure that a QSD develops the SWPPP.

78. To ensure proper site oversight, this General Permit requires a Qualified SWPPP Practitioner to oversee implementation of the BMPs required to comply with this General Permit.

N. Regional Water Board Authorities

79. Regional Water Boards are responsible for implementation and enforcement of this General Permit. A general approach to permitting is not always suitable for every construction site and environmental circumstances. Therefore, this General Permit recognizes that Regional Water Boards must have some flexibility and authority to alter, approve, exempt, or rescind permit authority granted under this General Permit in order to protect the beneficial uses of our receiving waters and prevent degradation of water quality.

IT IS HEREBY ORDERED that all dischargers subject to this General Permit shall comply with the following conditions and requirements (including all conditions and requirements as set forth in Attachments A, B, C, D, E and F)[6]:

II. CONDITIONS FOR PERMIT COVERAGE

A. Linear Underground/Overhead Projects (LUPs)

1. Linear Underground/Overhead Projects (LUPs) include, but are not limited to, any conveyance, pipe, or pipeline for the transportation of any gaseous, liquid (including water and wastewater for domestic municipal services), liquescent, or slurry substance; any cable line or wire for the transmission of electrical energy; any cable line or wire for communications (e.g. telephone, telegraph, radio or television messages); and associated ancillary facilities. Construction activities associated with LUPs include, but are not limited to, (a) those activities necessary for the installation of underground and overhead linear facilities (e.g., conduits, substructures, pipelines, towers, poles, cables, wires, connectors, switching, regulating and transforming equipment, and associated ancillary facilities); and include, but are not limited to, (b) underground utility mark-out, potholing, concrete and asphalt cutting and removal, trenching, excavation, boring and drilling, access road and pole/tower pad and cable/wire pull station, substation construction, substructure installation, construction of tower footings and/or foundations, pole and tower installations, pipeline installations, welding, concrete and/ or pavement repair or replacement, and stockpile/borrow locations.

2. The Legally Responsible Person is responsible for obtaining coverage under the General Permit where the construction of pipelines, utility lines, fiber-optic cables, or other linear underground/overhead projects will occur across several properties unless the LUP construction activities are covered under another construction storm water permit.

3. Only LUPs shall comply with the conditions and requirements in Attachment A, A.1 & A.2 of this Order. The balance of this Order is not applicable to LUPs except as indicated in Attachment A.

[6] These attachments are part of the General Permit itself and are not separate documents that are capable of being updated independently by the State Water Board.

B. Obtaining Permit Coverage Traditional Construction Sites

1. The Legally Responsible Person (LRP) (see Special Provisions, Electronic Signature and Certification Requirements, Section IV.I.1) must obtain coverage under this General Permit.

2. To obtain coverage, the LRP must electronically file Permit Registration Documents (PRDs) prior to the commencement of construction activity. Failure to obtain coverage under this General Permit for storm water discharges to waters of the United States is a violation of the CWA and the California Water Code.

3. PRDs shall consist of:

   a. Notice of Intent (NOI)
   b. Risk Assessment (Section VIII)
   c. Site Map
   d. Storm Water Pollution Prevention Plan (Section XIV)
   e. Annual Fee
   f. Signed Certification Statement

   Any information provided to the Regional Water Board shall comply with the Homeland Security Act and any other federal law that concerns security in the United States; any information that does not comply should not be submitted.

   Attachment B contains additional PRD information. Dischargers must electronically file the PRDs, and mail the appropriate annual fee to the State Water Board.

4. This permit is effective on July 1, 2010.

   a. **Dischargers Obtaining Coverage On or After July 1, 2010:** All dischargers requiring coverage on or after July 1, 2010, shall electronically file their PRDs prior to the commencement of construction activities, and mail the appropriate annual fee no later than seven days prior to the commencement of construction activities. Permit coverage shall not commence until the PRDs and the annual fee are received by the State Water Board, and a WDID number is assigned and sent by SMARTS.

   b. **Dischargers Covered Under 99-08-DWQ and 2003-0007-DWQ:** Existing dischargers subject to State Water Board Order No. 99-08-DWQ (existing dischargers) will continue coverage under 99-08-DWQ until July 1, 2010. After July 1, 2010, all NOIs subject to State Water Board Order No. 99-08-DWQ will be terminated.

Existing dischargers shall electronically file their PRDs no later than July 1, 2010. If an existing discharger's site acreage subject to the annual fee has changed, it shall mail a revised annual fee no less than seven days after receiving the revised annual fee notification, **or else lose permit coverage**. All existing dischargers shall be exempt from the risk determination requirements in Section VIII of this General Permit until two years after permit adoption. All existing dischargers are therefore subject to Risk Level 1 requirements regardless of their site's sediment and receiving water risks. However, a Regional Board retains the authority to require an existing discharger to comply with the Section VIII risk determination requirements.

5. The discharger is only considered covered by this General Permit upon receipt of a Waste Discharger Identification (WDID) number assigned and sent by the State Water Board Storm water Multi-Application and Report Tracking System (SMARTS). In order to demonstrate compliance with this General Permit, the discharger must obtain a WDID number and must present documentation of a valid WDID upon demand.

6. During the period this permit is subject to review by the U.S. EPA, the prior permit (State Water Board Order No. 99-08-DWQ) remains in effect. Existing dischargers under the prior permit will continue to have coverage under State Water Board Order No. 99-08-DWQ until this General Permit takes effect on July 1, 2010. Dischargers who complete their projects and electronically file an NOT prior to July 1, 2010, are not required to obtain coverage under this General Permit.

7. Small Construction Rainfall Erosivity Waiver

   EPA's Small Construction Erosivity Waiver applies to sites between one and five acres demonstrating that there are no adverse water quality impacts.

   Dischargers eligible for a Rainfall Erosivity Waiver based on low erosivity potential shall complete the electronic Notice of Intent (NOI) and Sediment Risk form through the State Water Board's SMARTS system, certifying that the construction activity will take place during a period when the value of the rainfall erosivity factor is less than five. Where the LRP changes or another LRP is added during construction, the new LRP must also submit a waiver certification through the SMARTS system.

   If a small construction site continues beyond the projected completion date given on the waiver certification, the LRP shall recalculate the

ED_002781A_00003896-00599

rainfall erosivity factor for the new project duration and submit this information through the SMARTS system. If the new R factor is below five (5), the discharger shall update through SMARTS all applicable information on the waiver certification and retain a copy of the revised waiver onsite. The LRP shall submit the new waiver certification 30 days prior to the projected completion date listed on the original waiver form to assure exemption from permitting requirements is uninterrupted. If the new R factor is five (5) or above, the LRP shall be required to apply for coverage under this Order.

8. In the case of a public emergency that requires immediate construction activities, a discharger shall submit a brief description of the emergency construction activity within five days of the onset of construction, and then shall submit all PRDs within thirty days.

C. Revising Permit Coverage for Change of Acreage or New Ownership

1. The discharger may reduce or increase the total acreage covered under this General Permit when a portion of the site is complete and/or conditions for termination of coverage have been met (See Section II.D Conditions for Termination of Coverage); when ownership of a portion of the site is sold to a different entity; or when new acreage, subject to this General Permit, is added to the site.

2. Within 30 days of a reduction or increase in total disturbed acreage, the discharger shall electronically file revisions to the PRDs that include:

   a. A revised NOI indicating the new project size;

   b. A revised site map showing the acreage of the site completed, acreage currently under construction, acreage sold/transferred or added, and acreage currently stabilized in accordance with the Conditions for Termination of Coverage in Section II.D below.

   c. SWPPP revisions, as appropriate; and

   d. Certification that any new landowners have been notified of applicable requirements to obtain General Permit coverage. The certification shall include the name, address, telephone number, and e-mail address of the new landowner.

   e. If the project acreage has increased, dischargers shall mail payment of revised annual fees within 14 days of receiving the revised annual fee notification.

3. The discharger shall continue coverage under the General Permit for any parcel that has not achieved "Final Stabilization" as defined in Section II.D.

4. When an LRP with active General Permit coverage transfers its LRP status to another person or entity that qualifies as an LRP, the existing LRP shall inform the new LRP of the General Permit's requirements. In order for the new LRP to continue the construction activity on its parcel of property, the new LRP, or the new LRP's approved signatory, must submit PRDs in accordance with this General Permit's requirements.

D. Conditions for Termination of Coverage

1. Within 90 days of when construction is complete or ownership has been transferred, the discharger shall electronically file a Notice of Termination (NOT), a final site map, and photos through the State Water Boards SMARTS system. Filing a NOT certifies that all General Permit requirements have been met. The Regional Water Board will consider a construction site complete only when all portions of the site have been transferred to a new owner, or all of the following conditions have been met:

   a. For purposes of "final stabilization," the site will not pose any additional sediment discharge risk than it did prior to the commencement of construction activity;

   b. There is no potential for construction-related storm water pollutants to be discharged into site runoff;

   c. Final stabilization has been reached;

   d. Construction materials and wastes have been disposed of properly;

   e. Compliance with the Post-Construction Standards in Section XIII of this General Permit has been demonstrated;

   f. Post-construction storm water management measures have been installed and a long-term maintenance plan[7] has been established; and

   g. All construction-related equipment, materials and any temporary BMPs no longer needed are removed from the site.

[7] For the purposes of this requirement a long-term maintenance plan will be designed for a minimum of five years, and will describe the procedures to ensure that the post-construction storm water management measures are adequately maintained.

2. The discharger shall certify that final stabilization conditions are satisfied in their NOT. Failure to certify shall result in continuation of permit coverage and annual billing.

3. The NOT must demonstrate through photos, RUSLE or RUSLE2, or results of testing and analysis that the site meets all of the conditions above (Section II.D.1) and the final stabilization condition (Section II.D.1.a) is attained by one of the following methods:

   a. "70% final cover method," no computational proof required

      OR:

   b. "RUSLE or RUSLE2 method," computational proof required

      OR:

   c. "Custom method", the discharger shall demonstrate in some other manner than a or b, above, that the site complies with the "final stabilization" requirement in Section II.D.1.a.

III. DISCHARGE PROHIBITIONS

A. Dischargers shall not violate any discharge prohibitions contained in applicable Basin Plans or statewide water quality control plans. Waste discharges to Areas of Special Biological Significance (ASBS) are prohibited by the California Ocean Plan, unless granted an exception issued by the State Water Board.

B. All discharges are prohibited except for the storm water and non-storm water discharges specifically authorized by this General Permit or another NPDES permit.

C. Authorized non-storm water discharges may include those from de-chlorinated potable water sources such as: fire hydrant flushing, irrigation of vegetative erosion control measures, pipe flushing and testing, water to control dust, uncontaminated ground water from dewatering, and other discharges not subject to a separate general NPDES permit adopted by a Regional Water Board. The discharge of non-storm water is authorized under the following conditions:

1. The discharge does not cause or contribute to a violation of any water quality standard;

2. The discharge does not violate any other provision of this General Permit;

3. The discharge is not prohibited by the applicable Basin Plan;

4. The discharger has included and implemented specific BMPs required by this General Permit to prevent or reduce the contact of the non-storm water discharge with construction materials or equipment.

5. The discharge does not contain toxic constituents in toxic amounts or (other) significant quantities of pollutants;

6. The discharge is monitored and meets the applicable NALs and NELs; and

7. The discharger reports the sampling information in the Annual Report.

If any of the above conditions are not satisfied, the discharge is not authorized by this General Permit. The discharger shall notify the Regional Water Board of any anticipated non-storm water discharges not already authorized by this General Permit or another NPDES permit, to determine whether a separate NPDES permit is necessary.

D. Debris resulting from construction activities are prohibited from being discharged from construction sites.

E. When soil contamination is found or suspected and a responsible party is not identified, or the responsible party fails to promptly take the appropriate action, the discharger shall have those soils sampled and tested to ensure proper handling and public safety measures are implemented. The discharger shall notify the appropriate local, State, and federal agency(ies) when contaminated soil is found at a construction site, and will notify the appropriate Regional Water Board.

IV. SPECIAL PROVISIONS

A. Duty to Comply

1. The discharger shall comply with all of the conditions of this General Permit. Any permit noncompliance constitutes a violation of the Clean Water Act (CWA) and the Porter-Cologne Water Quality Control Act and is grounds for enforcement action and/or removal from General Permit coverage.

2. The discharger shall comply with effluent standards or prohibitions established under Section 307(a) of the CWA for toxic pollutants within the time provided in the regulations that establish these standards or prohibitions, even if this General Permit has not yet been modified to incorporate the requirement.

B. General Permit Actions

1. This General Permit may be modified, revoked and reissued, or terminated for cause. The filing of a request by the discharger for a General Permit modification, revocation and reissuance, or termination, or a notification of planned changes or anticipated noncompliance does not annul any General Permit condition.

2. If any toxic effluent standard or prohibition (including any schedule of compliance specified in such effluent standard or prohibition) is promulgated under Section 307(a) of the CWA for a toxic pollutant which is present in the discharge and that standard or prohibition is more stringent than any limitation on the pollutant in this General Permit, this General Permit shall be modified or revoked and reissued to conform to the toxic effluent standard or prohibition and the dischargers so notified.

C. Need to Halt or Reduce Activity Not a Defense

It shall not be a defense for a discharger in an enforcement action that it would have been necessary to halt or reduce the permitted activity in order to maintain compliance with the conditions of this General Permit.

D. Duty to Mitigate

The discharger shall take all responsible steps to minimize or prevent any discharge in violation of this General Permit, which has a reasonable likelihood of adversely affecting human health or the environment.

E. Proper Operation and Maintenance

The discharger shall at all times properly operate and maintain any facilities and systems of treatment and control (and related appurtenances) which are installed or used by the discharger to achieve compliance with the conditions of this General Permit. Proper operation and maintenance also includes adequate laboratory controls and appropriate quality assurance procedures. Proper operation and maintenance may require the operation of backup or auxiliary facilities or similar systems installed by a discharger when necessary to achieve compliance with the conditions of this General Permit.

F. Property Rights

This General Permit does not convey any property rights of any sort or any exclusive privileges, nor does it authorize any injury to private property or any invasion of personal rights, nor does it authorize any infringement of Federal, State, or local laws or regulations.

G. Duty to Maintain Records and Provide Information

1. The discharger shall maintain a paper or electronic copy of all required records, including a copy of this General Permit, for three years from the date generated or date submitted, whichever is last. These records shall be available at the construction site until construction is completed.

2. The discharger shall furnish the Regional Water Board, State Water Board, or U.S. EPA, within a reasonable time, any requested information to determine compliance with this General Permit. The discharger shall also furnish, upon request, copies of records that are required to be kept by this General Permit.

H. Inspection and Entry

The discharger shall allow the Regional Water Board, State Water Board, U.S. EPA, and/or, in the case of construction sites which discharge through a municipal separate storm sewer, an authorized representative of the municipal operator of the separate storm sewer system receiving the discharge, upon the presentation of credentials and other documents as may be required by law, to:

1. Enter upon the discharger's premises at reasonable times where a regulated construction activity is being conducted or where records must be kept under the conditions of this General Permit;

ED_002781A_00003896-00606

2. Access and copy at reasonable times any records that must be kept under the conditions of this General Permit;

3. Inspect at reasonable times the complete construction site, including any off-site staging areas or material storage areas, and the erosion/sediment controls; and

4. Sample or monitor at reasonable times for the purpose of ensuring General Permit compliance.

I. Electronic Signature and Certification Requirements

1. All Permit Registration Documents (PRDs) and Notices of Termination (NOTs) shall be electronically signed, certified, and submitted via SMARTS to the State Water Board. Either the Legally Responsible Person (LRP), as defined in Appendix 5 – Glossary, or a person legally authorized to sign and certify PRDs and NOTs on behalf of the LRP (the LRP's Approved Signatory, as defined in Appendix 5 - Glossary) must submit all information electronically via SMARTS.

2. Changes to Authorization. If an Approved Signatory's authorization is no longer accurate, a new authorization satisfying the requirements of paragraph (a) of this section must be submitted via SMARTS prior to or together with any reports, information or applications to be signed by an Approved Signatory.

3. All Annual Reports, or other information required by the General Permit (other than PRDs and NOTs) or requested by the Regional Water Board, State Water Board, U.S. EPA, or local storm water management agency shall be certified and submitted by the LRP or the LRP's Approved Signatory.

J. Certification

Any person signing documents under Section IV.I above, shall make the following certification:

"I certify under penalty of law that this document and all attachments were prepared under my direction or supervision in accordance with a system designed to assure that qualified personnel properly gather and evaluate the information submitted. Based on my inquiry of the person or persons who manage the system or those persons directly responsible for gathering the information, to the best of my knowledge and belief, the information submitted is, true, accurate, and complete. I am aware that there are significant penalties for submitting false information, including the possibility of fine and imprisonment for knowing violations."

K. Anticipated Noncompliance

The discharger shall give advance notice to the Regional Water Board and local storm water management agency of any planned changes in the construction activity, which may result in noncompliance with General Permit requirements.

L. Bypass

Bypass[8] is prohibited. The Regional Water Board may take enforcement action against the discharger for bypass unless:

1. Bypass was unavoidable to prevent loss of life, personal injury or severe property damage;[9]

2. There were no feasible alternatives to bypass, such as the use of auxiliary treatment facilities, retention of untreated waste, or maintenance during normal periods of equipment downtime. This condition is not satisfied if adequate back-up equipment should have been installed in the exercise of reasonable engineering judgment to prevent a bypass that could occur during normal periods of equipment downtime or preventative maintenance;

3. The discharger submitted a notice at least ten days in advance of the need for a bypass to the Regional Water Board; or

4. The discharger may allow a bypass to occur that does not cause effluent limitations to be exceeded, but only if it is for essential maintenance to assure efficient operation. In such a case, the above bypass conditions are not applicable. The discharger shall submit notice of an unanticipated bypass as required.

M. Upset

1. A discharger that wishes to establish the affirmative defense of an upset[10] in an action brought for noncompliance shall demonstrate,

---

[8] The intentional diversion of waste streams from any portion of a treatment facility

[9] Severe property damage means substantial physical damage to property, damage to the treatment facilities that causes them to become inoperable, or substantial and permanent loss of natural resources that can reasonably be expected to occur in the absence of a bypass. Severe property damage does not mean economic loss caused by delays in production.

[10] An exceptional incident in which there is unintentional and temporary noncompliance the technology based numeric effluent limitations because of factors beyond the reasonable control of the discharger. An upset does not include noncompliance to the extent caused by operational error, improperly designed treatment facilities, inadequate treatment facilities, lack of preventative maintenance, or careless or improper operation.

through properly signed, contemporaneous operating logs, or other relevant evidence that:

a. An upset occurred and that the discharger can identify the cause(s) of the upset

b. The treatment facility was being properly operated by the time of the upset

c. The discharger submitted notice of the upset as required; and

d. The discharger complied with any remedial measures required

2. No determination made before an action of noncompliance occurs, such as during administrative review of claims that noncompliance was caused by an upset, is final administrative action subject to judicial review.

3. In any enforcement proceeding, the discharger seeking to establish the occurrence of an upset has the burden of proof

N. Penalties for Falsification of Reports

Section 309(c)(4) of the CWA provides that any person who knowingly makes any false material statement, representation, or certification in any record or other document submitted or required to be maintained under this General Permit, including reports of compliance or noncompliance shall upon conviction, be punished by a fine of not more than $10,000 or by imprisonment for not more than two years or by both.

O. Oil and Hazardous Substance Liability

Nothing in this General Permit shall be construed to preclude the institution of any legal action or relieve the discharger from any responsibilities, liabilities, or penalties to which the discharger is or may be subject to under Section 311 of the CWA.

P. Severability

The provisions of this General Permit are severable; and, if any provision of this General Permit or the application of any provision of this General Permit to any circumstance is held invalid, the application of such provision to other circumstances and the remainder of this General Permit shall not be affected thereby.

Q. Reopener Clause

This General Permit may be modified, revoked and reissued, or terminated for cause due to promulgation of amended regulations, receipt of U.S. EPA guidance concerning regulated activities, judicial decision, or in accordance with 40 Code of Federal Regulations (CFR) 122.62, 122.63, 122.64, and 124.5.

R. Penalties for Violations of Permit Conditions

1. Section 309 of the CWA provides significant penalties for any person who violates a permit condition implementing Sections 301, 302, 306, 307, 308, 318, or 405 of the CWA or any permit condition or limitation implementing any such section in a permit issued under Section 402. Any person who violates any permit condition of this General Permit is subject to a civil penalty not to exceed $37,500[11] per calendar day of such violation, as well as any other appropriate sanction provided by Section 309 of the CWA.

2. The Porter-Cologne Water Quality Control Act also provides for civil and criminal penalties, which in some cases are greater than those under the CWA.

S. Transfers

This General Permit is not transferable.

T. Continuation of Expired Permit

This General Permit continues in force and effect until a new General Permit is issued or the SWRCB rescinds this General Permit. Only those dischargers authorized to discharge under the expiring General Permit are covered by the continued General Permit.

[11] May be further adjusted in accordance with the Federal Civil Penalties Inflation Adjustment Act.

V. EFFLUENT STANDARDS

A. Narrative Effluent Limitations

1. Storm water discharges and authorized non-storm water discharges regulated by this General Permit shall not contain a hazardous substance equal to or in excess of reportable quantities established in 40 C.F.R. §§ 117.3 and 302.4, unless a separate NPDES Permit has been issued to regulate those discharges.

2. Dischargers shall minimize or prevent pollutants in storm water discharges and authorized non-storm water discharges through the use of controls, structures, and management practices that achieve BAT for toxic and non-conventional pollutants and BCT for conventional pollutants.

B. Numeric Effluent Limitations (NELs)

Table 1- Numeric Effluent Limitations, Numeric Action Levels, Test Methods, Detection Limits, and Reporting Units

Parameter	Test Method	Discharge Type	Min. Detection Limit	Units	Numeric Action Level	Numeric Effluent Limitation
pH	Field test with calibrated portable instrument	Risk Level 2	0.2	pH units	lower NAL = 6.5 upper NAL = 8.5	N/A
		Risk Level 3			lower NAL = 6.5 upper NAL = 8.5	lower NEL = 6.0 upper NEL = 9.0
Turbidity	EPA 0180.1 and/or field test with calibrated portable instrument	Risk Level 2	1	NTU	250 NTU	N/A
		Risk Level 3			250 NTU	500 NTU

1. Numeric Effluent Limitations (NELs):

   a. **Storm Event, Daily Average pH Limits –** For Risk Level 3 dischargers, the pH of storm water and non-storm water discharges

shall be within the ranges specified in Table 1 during any site phase where there is a "high risk of pH discharge."[12]

b. **Storm Event Daily Average Turbidity Limit** – For Risk Level 3 dischargers, the turbidity of storm water and non-storm water discharges shall not exceed 500 NTU.

2. If daily average sampling results are outside the range of pH NELs (i.e., is below the lower NEL for pH or exceeds the upper NEL for pH) or exceeds the turbidity NEL (as listed in Table 1), the discharger is in violation of this General Permit and shall electronically file monitoring results in violation within 5 business days of obtaining the results.

3. **Compliance Storm Event**:

   Discharges of storm water from Risk Level 3 sites shall comply with applicable NELs (above) unless the storm event causing the discharges is determined after the fact to be equal to or larger than the Compliance Storm Event (expressed in inches of rainfall). The Compliance Storm Event for Risk Level 3 discharges is the 5 year, 24 hour storm (expressed in tenths of an inch of rainfall), as determined by using these maps:

   http://www.wrcc.dri.edu/pcpnfreq/nca5y24.gif
   http://www.wrcc.dri.edu/pcpnfreq/sca5y24.gif

   Compliance storm event verification shall be done by reporting on-site rain gauge readings as well as nearby governmental rain gauge readings.

4. Dischargers shall not be required to comply with NELs if the site receives run-on from a forest fire or any other natural disaster.

C. Numeric Action Levels (NALs)

1. For Risk Level 2 and 3 dischargers, the lower storm event average NAL for pH is 6.5 pH units and the upper storm event average NAL for pH is 8.5 pH units. The discharger shall take actions as described below if the discharge is outside of this range of pH values.

[12] A period of high risk of pH discharge is defined as a project's complete utilities phase, complete vertical build phase, and any portion of any phase where significant amounts of materials are placed directly on the land at the site in a manner that could result in significant alterations of the background pH of the discharges.

2. For Risk Level 2 and 3 dischargers, the NAL storm event daily average for turbidity is 250 NTU. The discharger shall take actions as described below if the discharge is outside of this range of turbidity values.

3. Whenever the results from a storm event daily average indicate that the discharge is below the lower NAL for pH, exceeds the upper NAL for pH, or exceeds the turbidity NAL (as listed in Table 1), the discharger shall conduct a construction site and run-on evaluation to determine whether pollutant source(s) associated with the site's construction activity may have caused or contributed to the NAL exceedance and shall immediately implement corrective actions if they are needed.

4. The site evaluation shall be documented in the SWPPP and specifically address whether the source(s) of the pollutants causing the exceedance of the NAL:

   a. Are related to the construction activities and whether additional BMPs are required to (1) meet BAT/BCT requirements; (2) reduce or prevent pollutants in storm water discharges from causing exceedances of receiving water objectives; and (3) determine what corrective action(s) were taken or will be taken and with a description of the schedule for completion.

      AND/OR:

   b. Are related to the run-on associated with the construction site location and whether additional BMPs measures are required to (1) meet BAT/BCT requirements; (2) reduce or prevent pollutants in storm water discharges from causing exceedances of receiving water objectives; and (3) what corrective action(s) were taken or will be taken with a description of the schedule for completion.

VI. RECEIVING WATER LIMITATIONS

A. The discharger shall ensure that storm water discharges and authorized non-storm water discharges to any surface or ground water will not adversely affect human health or the environment.

B. The discharger shall ensure that storm water discharges and authorized non-storm water discharges will not contain pollutants in quantities that threaten to cause pollution or a public nuisance.

C. The discharger shall ensure that storm water discharges and authorized non-storm water discharges will not contain pollutants that cause or contribute to an exceedance of any applicable water quality objectives or water quality standards (collectively, WQS) contained in a Statewide Water Quality Control Plan, the California Toxics Rule, the National Toxics Rule, or the applicable Regional Water Board's Water Quality Control Plan (Basin Plan).

D. Dischargers located within the watershed of a CWA § 303(d) impaired water body, for which a TMDL has been approved by the U.S. EPA, shall comply with the approved TMDL if it identifies "construction activity" or land disturbance as a source of the pollution.

VII. TRAINING QUALIFICATIONS AND CERTIFICATION REQUIREMENTS

A. General

The discharger shall ensure that all persons responsible for implementing requirements of this General Permit shall be appropriately trained in accordance with this Section. Training should be both formal and informal, occur on an ongoing basis, and should include training offered by recognized governmental agencies or professional organizations. Those responsible for preparing and amending SWPPPs shall comply with the requirements in this Section VII.

The discharger shall provide documentation of all training for persons responsible for implementing the requirements of this General Permit in the Annual Reports.

B. SWPPP Certification Requirements

1. **Qualified SWPPP Developer:** The discharger shall ensure that SWPPPs are written, amended and certified by a Qualified SWPPP Developer (QSD). A QSD shall have one of the following registrations or certifications, and appropriate experience, as required for:

   a. A California registered professional civil engineer;

   b. A California registered professional geologist or engineering geologist;

   c. A California registered landscape architect;

   d. A professional hydrologist registered through the American Institute of Hydrology;

   e. A Certified Professional in Erosion and Sediment Control (CPESC) ™ registered through Enviro Cert International, Inc.;

   f. A Certified Professional in Storm Water Quality (CPSWQ) ™ registered through Enviro Cert International, Inc.; or

   g. A professional in erosion and sediment control registered through the National Institute for Certification in Engineering Technologies (NICET).

Effective two years after the adoption date of this General Permit, a QSD shall have attended a State Water Board-sponsored or approved QSD training course.

2. The discharger shall list the name and telephone number of the currently designated Qualified SWPPP Developer(s) in the SWPPP.

3. **Qualified SWPPP Practitioner:** The discharger shall ensure that all BMPs required by this General Permit are implemented by a Qualified SWPPP Practitioner (QSP). A QSP is a person responsible for non-storm water and storm water visual observations, sampling and analysis. Effective two years from the date of adoption of this General Permit, a QSP shall be either a QSD or have one of the following certifications:

   a. A certified erosion, sediment and storm water inspector registered through Enviro Cert International, Inc.; or

   b. A certified inspector of sediment and erosion control registered through Certified Inspector of Sediment and Erosion Control, Inc.

   Effective two years after the adoption date of this General Permit, a QSP shall have attended a State Water Board-sponsored or approved QSP training course.

4. The LRP shall list in the SWPPP, the name of any Approved Signatory, and provide a copy of the written agreement or other mechanism that provides this authority from the LRP in the SWPPP.

5. The discharger shall include, in the SWPPP, a list of names of all contractors, subcontractors, and individuals who will be directed by the Qualified SWPPP Practitioner. This list shall include telephone numbers and work addresses. Specific areas of responsibility of each subcontractor and emergency contact numbers shall also be included.

6. The discharger shall ensure that the SWPPP and each amendment will be signed by the Qualified SWPPP Developer. The discharger shall include a listing of the date of initial preparation and the date of each amendment in the SWPPP.

VIII. RISK DETERMINATION

The discharger shall calculate the site's sediment risk and receiving water risk during periods of soil exposure (i.e. grading and site stabilization) and use the calculated risks to determine a Risk Level(s) using the methodology in

Appendix 1. For any site that spans two or more planning watersheds,[13] the discharger shall calculate a separate Risk Level for each planning watershed. The discharger shall notify the State Water Board of the site's Risk Level determination(s) and shall include this determination as a part of submitting the PRDs. If a discharger ends up with more than one Risk Level determination, the Regional Water Board may choose to break the project into separate levels of implementation.

IX. RISK LEVEL 1 REQUIREMENTS

Risk Level 1 Dischargers shall comply with the requirements included in Attachment C of this General Permit.

X. RISK LEVEL 2 REQUIREMENTS

Risk Level 2 Dischargers shall comply with the requirements included in Attachment D of this General Permit.

XI. RISK LEVEL 3 REQUIREMENTS

Risk Level 3 Dischargers shall comply with the requirements included in Attachment E of this General Permit.

XII. ACTIVE TREATMENT SYSTEMS (ATS)

Dischargers choosing to implement an ATS on their site shall comply with all of the requirements in Attachment F of this General Permit.

[13] Planning watershed: defined by the Calwater Watershed documents as a watershed that ranges in size from approximately 3,000 to 10,000 acres http://cain.ice.ucdavis.edu/calwater/calwfaq.html, http://gis.ca.gov/catalog/BrowseRecord.epl?id=22175 .

XIII. POST-CONSTRUCTION STANDARDS

A. All dischargers shall comply with the following runoff reduction requirements unless they are located within an area subject to post-construction standards of an active Phase I or II municipal separate storm sewer system (MS4) permit that has an approved Storm Water Management Plan.

1. This provision shall take effect three years from the adoption date of this permit, or later at the discretion of the Executive Officer of the Regional Board.

2. The discharger shall demonstrate compliance with the requirements of this section by submitting with their NOI a map and worksheets in accordance with the instructions in Appendix 2. The discharger shall use non-structural controls unless the discharger demonstrates that non-structural controls are infeasible or that structural controls will produce greater reduction in water quality impacts.

3. The discharger shall, through the use of non-structural and structural measures as described in Appendix 2, replicate the pre-project water balance (for this permit, defined as the volume of rainfall that ends up as runoff) for the smallest storms up to the 85th percentile storm event (or the smallest storm event that generates runoff, whichever is larger). Dischargers shall inform Regional Water Board staff at least 30 days prior to the use of any structural control measure used to comply with this requirement. Volume that cannot be addressed using non-structural practices shall be captured in structural practices and approved by the Regional Water Board. When seeking Regional Board approval for the use of structural practices, dischargers shall document the infeasibility of using non-structural practices on the project site, or document that there will be fewer water quality impacts through the use of structural practices.

4. For sites whose disturbed area exceeds two acres, the discharger shall preserve the pre-construction drainage density (miles of stream length per square mile of drainage area) for all drainage areas within the area serving a first order stream[14] or larger stream and ensure that post-project time of runoff concentration is equal or greater than pre-project time of concentration.

[14] A first order stream is defined as a stream with no tributaries.

B. All dischargers shall implement BMPs to reduce pollutants in storm water discharges that are reasonably foreseeable after all construction phases have been completed at the site (Post-construction BMPs).

ED_002781A_00003896-00619

XIV. SWPPP REQUIREMENTS

A. The discharger shall ensure that the Storm Water Pollution Prevention Plans (SWPPPs) for all traditional project sites are developed and amended or revised by a QSD. The SWPPP shall be designed to address the following objectives:

1. All pollutants and their sources, including sources of sediment associated with construction, construction site erosion and all other activities associated with construction activity are controlled;

2. Where not otherwise required to be under a Regional Water Board permit, all non-storm water discharges are identified and either eliminated, controlled, or treated;

3. Site BMPs are effective and result in the reduction or elimination of pollutants in storm water discharges and authorized non-storm water discharges from construction activity to the BAT/BCT standard;

4. Calculations and design details as well as BMP controls for site run-on are complete and correct, and

5. Stabilization BMPs installed to reduce or eliminate pollutants after construction are completed.

B. To demonstrate compliance with requirements of this General Permit, the QSD shall include information in the SWPPP that supports the conclusions, selections, use, and maintenance of BMPs.

C. The discharger shall make the SWPPP available at the construction site during working hours while construction is occurring and shall be made available upon request by a State or Municipal inspector. When the original SWPPP is retained by a crewmember in a construction vehicle and is not currently at the construction site, current copies of the BMPs and map/drawing will be left with the field crew and the original SWPPP shall be made available via a request by radio/telephone.

XV. REGIONAL WATER BOARD AUTHORITIES

A. In the case where the Regional Water Board does not agree with the discharger's self-reported risk level (e.g., they determine themselves to be a Level 1 Risk when they are actually a Level 2 Risk site), Regional Water Boards may either direct the discharger to reevaluate the Risk Level(s) for their site or terminate coverage under this General Permit.

B. Regional Water Boards may terminate coverage under this General Permit for dischargers who fail to comply with its requirements or where they determine that an individual NPDES permit is appropriate.

C. Regional Water Boards may require dischargers to submit a Report of Waste Discharge / NPDES permit application for Regional Water Board consideration of individual requirements.

D. Regional Water Boards may require additional Monitoring and Reporting Program Requirements, including sampling and analysis of discharges to sediment-impaired water bodies.

E. Regional Water Boards may require dischargers to retain records for more than the three years required by this General Permit.

XVI. ANNUAL REPORTING REQUIREMENTS

A. All dischargers shall prepare and electronically submit an Annual Report no later than September 1 of each year.

B. The discharger shall certify each Annual Report in accordance with the Special Provisions.

C. The discharger shall retain an electronic or paper copy of each Annual Report for a minimum of three years after the date the annual report is filed.

D. The discharger shall include storm water monitoring information in the Annual Report consisting of:

1. a summary and evaluation of all sampling and analysis results, including copies of laboratory reports;

2. the analytical method(s), method reporting unit(s), and method detection limit(s) of each analytical parameter (analytical results that are less than the method detection limit shall be reported as "less than the method detection limit");

3. a summary of all corrective actions taken during the compliance year;

4. identification of any compliance activities or corrective actions that were not implemented;

5. a summary of all violations of the General Permit;

6. the names of individual(s) who performed the facility inspections, sampling, visual observation (inspections), and/or measurements;

7. the date, place, time of facility inspections, sampling, visual observation (inspections), and/or measurements, including precipitation (rain gauge); and

8. the visual observation and sample collection exception records and reports specified in Attachments C, D, and E.

E. The discharger shall provide training information in the Annual Report consisting of:

1. documentation of all training for individuals responsible for all activities associated with compliance with this General Permit;

2. documentation of all training for individuals responsible for BMP installation, inspection, maintenance, and repair; and

3. documentation of all training for individuals responsible for overseeing, revising, and amending the SWPPP.

ATTACHMENT A
Linear Underground/ Overhead Requirements

A. DEFINITION OF LINEAR UNDERGROUND/OVERHEAD PROJECTS 1
B. LINEAR PROJECT PERMIT REGISTRATION DOCUMENTS (PRDs) 3
C. LINEAR PROJECT TERMINATION OF COVERAGE REQUIREMENTS ..4
D. DISCHARGE PROHIBITIONS 6
E. SPECIAL PROVISIONS 8
F. EFFLUENT STANDARDS 13
G. RECEIVING WATER LIMITATIONS 16
H. TRAINING QUALIFICATIONS 16
I. TYPES OF LINEAR PROJECTS 18
J. LUP TYPE-SPECIFIC REQUIREMENTS 20
K. STORM WATER POLLUTION PREVENTION PLAN (SWPPP) REQUIREMENTS 28
L. REGIONAL WATER BOARD AUTHORITIES 29
M. MONITORING AND REPORTING REQUIREMENTS 31

All Linear Underground/Overhead project dischargers who submit permit registration documents (PRDs) indicating their intention to be regulated under the provisions of this General Permit shall comply with the following:

A. DEFINITION OF LINEAR UNDERGROUND/OVERHEAD PROJECTS

1. Linear Underground/Overhead Projects (LUPs) include, but are not limited to, any conveyance, pipe, or pipeline for the transportation of any gaseous, liquid (including water and wastewater for domestic municipal services), liquiescent, or slurry substance; any cable line or wire for the transmission of electrical energy; any cable line or wire for communications (e.g., telephone, telegraph, radio, or television messages); and associated ancillary facilities. Construction activities associated with LUPs include, but are not limited to, (a) those activities necessary for the installation of underground and overhead linear facilities (e.g., conduits, substructures, pipelines, towers, poles, cables, wires, connectors, switching, regulating and transforming equipment, and associated ancillary facilities); and include, but are not limited to, (b) underground utility mark-out, potholing, concrete and asphalt cutting and removal, trenching, excavation, boring and drilling, access road and pole/tower pad and cable/wire pull station, substation construction, substructure installation, construction of tower footings and/or foundations, pole and tower installations, pipeline installations, welding, concrete and/ or pavement repair or replacement, and stockpile/borrow locations.

2. LUP evaluation shall consist of two tasks:

a. Confirm that the project or project section(s) qualifies as an LUP. The State Water Board website contains a project determination guidance flowchart. http://www.waterboards.ca.gov/water_issues/programs/stormwater/constpermits.shtml

b. Identify which Type(s) (1, 2 or 3 described in Section I below) are applicable to the project or project sections based on project sediment and receiving water risk. (See Attachment A.1)

3. A Legally Responsible Person (LRP) for a Linear Underground/Overhead project is required to obtain CGP coverage under one or more permit registration document (PRD) electronic submittals to the State Water Board's Storm Water Multi-Application and Report Tracking (SMARTs) system. Attachment A.1 contains a flow chart to be used when determining if a linear project qualifies for coverage and to determine LUP Types. Since a LUP may be constructed within both developed and undeveloped locations and portions of LUPs may be constructed by different contractors, LUPs may be broken into logical permit sections. Sections may be determined based on portions of a project conducted by one contractor. Other situations may also occur, such as the time period in which the sections of a project will be constructed (e.g. project phases), for which separate permit coverage is possible. For projects that are broken into separate sections, a description of how each section relates to the overall project and the definition of the boundaries between sections shall be clearly stated.

4. Where construction activities transverse or enter into different Regional Water Board jurisdictions, LRPs shall obtain permit coverage for each Regional Water Board area involved prior to the commencement of construction activities.

5. Small Construction Rainfall Erosivity Waiver

EPA's Small Construction Erosivity Waiver applies to sites between one and five acres demonstrating that there are no adverse water quality impacts.

Dischargers eligible for a Rainfall Erosivity Waiver based on low erosivity potential shall complete the electronic Notice of Intent (NOI) and Sediment Risk form through the State Water Board's SMARTS system, certifying that the construction activity will take place during a period when the value of the rainfall erosivity factor is less than five. Where the LRP changes or another LRP is added during construction, the new LRP must also submit a waiver certification through the SMARTS system.

ED_002781A_00003896-00625

If a small linear construction site continues beyond the projected completion date given on the waiver certification, the LRP shall recalculate the rainfall erosivity factor for the new project duration and submit this information through the SMARTS system. If the new R factor is below five (5), the discharger shall update through SMARTS all applicable information on the waiver certification and retain a copy of the revised waiver onsite. The LRP shall submit the new waiver certification 30 days prior to the projected completion date listed on the original waiver form to assure exemption from permitting requirements is uninterrupted. If the new R factor is five (5) or above, the LRP shall be required to apply for coverage under this Order.

B. LINEAR PROJECT PERMIT REGISTRATION DOCUMENTS (PRDs)

Any information provided to the Regional Water Board shall comply with the Homeland Security Act and any other federal law that concerns security in the United States; any information that does not comply should not be submitted. PRDs shall consist of the following:

1. Notice of Intent (NOI)

Prior to construction activities, the LRP of a proposed linear underground/overhead project shall utilize the processes and methods provided in Attachment A.2, Permit Registration Documents (PRDs) – General Instructions for Linear Underground/Overhead Projects to comply with the Construction General Permit.

2. Site Maps

LRPs submitting PRDs shall include at least 3 maps. The first map will be a zoomed[1] 1000-1500 ft vicinity map that shows the starting point of the project. The second will be a zoomed map of 1000-1500 ft showing the ending location of the project. The third will be a larger view vicinity map, 1000 ft to 2000 ft, displaying the entire project location depending on the project size, and indicating the LUP type (1, 2 or 3) areas within the total project footprint.

3. Drawings

LRPs submitting PRDs shall include a construction drawing(s) or other appropriate drawing(s) or map(s) that shows the locations of storm drain

[1] An image with a close-up/enhanced detailed view of site features that show minute details such as streets and neighboring structures.
Or: An image with a close-up/enhanced detailed view of the site's surrounding infrastructure.
Or: An image with a close up detailed view of the project and its surroundings.

inlets and waterbodies[2] that may receive discharges from the construction activities and that shows the locations of BMPs to be installed for all those BMPs that can be illustrated on the revisable drawing(s) or map(s). If storm drain inlets, waterbodies, and/or BMPs cannot be adequately shown on the drawing(s) or map(s) they should be described in detail within the SWPPP.

4. Storm Water Pollution Prevention Plan (SWPPP)

LUP dischargers shall comply with the SWPPP Preparation, Implementation, and Oversight requirements in Section K of this Attachment.

5. Contact information

LUP dischargers shall include contact information for all contractors (or subcontractors) responsible for each area of an LUP project. This should include the names, telephone numbers, and addresses of contact personnel. Specific areas of responsibility of each contact, and emergency contact numbers should also be included.

6. In the case of a public emergency that requires immediate construction activities, a discharger shall submit a brief description of the emergency construction activity within five days of the onset of construction, and then shall submit all PRDs within thirty days.

C. LINEAR PROJECT TERMINATION OF COVERAGE REQUIREMENTS

The LRP may terminate coverage of an LUP when construction activities are completed by submitting an electronic notice of termination (NOT) through the State Water Board's SMARTS system. Termination requirements are different depending on the complexity of the LUP. An LUP is considered complete when: (a) there is no potential for construction-related storm water pollution; (b) all elements of the SWPPP have been completed; (c) construction materials and waste have been disposed of properly; (d) the site is in compliance with all local storm water management requirements; and (e) the LRP submits a notice of termination (NOT) and has received approval for termination from the appropriate Regional Water Board office.

1. LUP Stabilization Requirements

The LUP discharger shall ensure that all disturbed areas of the construction site are stabilized prior to termination of coverage under this General Permit. Final stabilization for the purposes of submitting an NOT

[2] Includes basin(s) that the MS4 storm sewer systems may drain to for Hydromodification or Hydrological Conditional of Concerns under the MS4 permits.

is satisfied when all soil disturbing activities are completed and one of the following criteria is met:

a. In disturbed areas that were vegetated prior to construction activities of the LUP, the area disturbed must be re-established to a uniform vegetative cover equivalent to 70 percent coverage of the preconstruction vegetative conditions. Where preconstruction vegetation covers less than 100 percent of the surface, such as in arid areas, the 70 percent coverage criteria is adjusted as follows: if the preconstruction vegetation covers 50 percent of the ground surface, 70 percent of 50 percent (.70 X .50=.35) would require 35 percent total uniform surface coverage; or

b. Where no vegetation is present prior to construction, the site is returned to its original line and grade and/or compacted to achieve stabilization; or

c. Equivalent stabilization measures have been employed. These measures include, but are not limited to, the use of such BMPs as blankets, reinforced channel liners, soil cement, fiber matrices, geotextiles, or other erosion resistant soil coverings or treatments.

2. LUP Termination of Coverage Requirements

The LRP shall file an NOT through the State Water Board's SMARTS system. By submitting an NOT, the LRP is certifying that construction activities for an LUP are complete and that the project is in full compliance with requirements of this General Permit and that it is now compliant with soil stabilization requirements where appropriate. Upon approval by the appropriate Regional Water Board office, permit coverage will be terminated.

3. Revising Coverage for Change of Acreage

When the LRP of a portion of an LUP construction project changes, or when a phase within a multi-phase project is completed, the LRP may reduce the total acreage covered by this General Permit. In reducing the acreage covered by this General Permit, the LRP shall electronically file revisions to the PRDs that include:

a. a revised NOI indicating the new project size;

b. a revised site map showing the acreage of the project completed, acreage currently under construction, acreage sold, transferred or added, and acreage currently stabilized.

c. SWPPP revisions, as appropriate; and

d. certification that any new LRPs have been notified of applicable requirements to obtain General Permit coverage. The certification shall include the name, address, telephone number, and e-mail address (if known) of the new LRP.

If the project acreage has increased, dischargers shall mail payment of revised annual fees within 14 days of receiving the revised annual fee notification.

D. DISCHARGE PROHIBITIONS

1. LUP dischargers shall not violate any discharge prohibitions contained in applicable Basin Plans or statewide water quality control plans. Waste discharges to Areas of Special Biological Significance (ASBS) are prohibited by the California Ocean Plan, unless granted an exception issued by the State Water Board.

2. LUP dischargers are prohibited from discharging non-storm water that is not otherwise authorized by this General Permit. Non-storm water discharges authorized by this General Permit[3] may include, fire hydrant flushing, irrigation of vegetative erosion control measures, pipe flushing and testing, water to control dust, street cleaning, dewatering,[4] uncontaminated groundwater from dewatering, and other discharges not subject to a separate general NPDES permit adopted by a Regional Water Board. Such discharges are allowed by this General Permit provided they are not relied upon to clean up failed or inadequate construction or post-construction BMPs designed to keep materials on site. These authorized non-storm water discharges:

[3] Dischargers must identify all authorized non-storm water discharges in the LUP's SWPPP and identify BMPs that will be implemented to either eliminate or reduce pollutants in non-storm water discharges. Regional Water Boards may direct the discharger to discontinue discharging such non-storm water discharges if determined that such discharges discharge significant pollutants or threaten water quality.
[4] Dewatering activities may be prohibited or need coverage under a separate permit issued by the Regional Water Boards. Dischargers shall check with the appropriate Regional Water Boards for any required permit or basin plan conditions prior to initial dewatering activities to land, storm drains, or waterbodies.

a. Shall not cause or contribute to a violation of any water quality standard;

b. Shall not violate any other provision of this General Permit;

c. Shall not violate any applicable Basin Plan;

d. Shall comply with BMPs as described in the SWPPP;

e. Shall not contain toxic constituents in toxic amounts or (other) significant quantities of pollutants;

f. Shall be monitored and meets the applicable NALs and NELs; and

g. Shall be reported by the discharger in the Annual Report.

If any of the above conditions are not satisfied, the discharge is not authorized by this General Permit. The discharger shall notify the Regional Water Board of any anticipated non-storm water discharges not authorized by this General Permit to determine the need for a separate NPDES permit.

Additionally, some LUP dischargers may be required to obtain a separate permit if the applicable Regional Water Board has adopted a General Permit for dewatering discharges. Wherever feasible, alternatives, that do not result in the discharge of non-storm water, shall be implemented in accordance with this Attachment's Section K.2 - SWPPP Implementation Schedule.

3. LUP dischargers shall ensure that trench spoils or any other soils disturbed during construction activities that are contaminated[5] are not discharged with storm water or non-storm water discharges into any storm drain or water body except pursuant to an NPDES permit.

When soil contamination is found or suspected and a responsible party is not identified, or the responsible party fails to promptly take the appropriate action, the LUP discharger shall have those soils sampled and tested to ensure that proper handling and public safety measures are

[5] Contaminated soil contains pollutants in concentrations that exceed the appropriate thresholds that various regulatory agencies set for those substances. Preliminary testing of potentially contaminated soils will be based on odor, soil discoloration, or prior history of the site's chemical use and storage and other similar factors. When soil contamination is found or suspected and a responsible party is not identified, or the responsible party fails to promptly take the appropriate action, the discharger shall have those soils sampled and tested to ensure proper handling and public safety measures are implemented. The legally responsible person will notify the appropriate local, State, or federal agency(ies) when contaminated soil is found at a construction site, and will notify the Regional Water Board by submitting an NOT at the completion of the project.

implemented. The LUP discharger shall notify the appropriate local, State, and federal agency(ies) when contaminated soil is found at a construction site, and will notify the appropriate Regional Water Board.

4. Discharging any pollutant-laden water that will cause or contribute to an exceedance of the applicable Regional Water Board's Basin Plan from a dewatering site or sediment basin into any receiving water or storm drain is prohibited.

5. Debris[6] resulting from construction activities are prohibited from being discharged from construction project sites.

E. SPECIAL PROVISIONS

1. Duty to Comply

a. The LUP discharger must comply with all of the conditions of this General Permit. Any permit noncompliance constitutes a violation of the Clean Water Act (CWA) and the Porter-Cologne Water Quality Control Act and is grounds for enforcement action and/or removal from General Permit coverage.

b. The LUP discharger shall comply with effluent standards or prohibitions established under Section 307(a) of the CWA for toxic pollutants within the time provided in the regulations that establish these standards or prohibitions, even if this General Permit has not yet been modified to incorporate the requirement.

2. General Permit Actions

a. This General Permit may be modified, revoked and reissued, or terminated for cause. The filing of a request by the discharger for a General Permit modification, revocation and reissuance, or termination, or a notification of planned changes or anticipated noncompliance does not annul any General Permit condition.

[6] Litter, rubble, discarded refuse, and remains of something destroyed.

b. If any toxic effluent standard or prohibition (including any schedule of compliance specified in such effluent standard or prohibition) is promulgated under Section 307(a) of the CWA for a toxic pollutant which is present in the discharge and that standard or prohibition is more stringent than any limitation on the pollutant in this General Permit, this General Permit shall be modified or revoked and reissued to conform to the toxic effluent standard or prohibition and the dischargers so notified.

3. Need to Halt or Reduce Activity Not a Defense

It shall not be a defense for an LUP discharger in an enforcement action that it would have been necessary to halt or reduce the permitted activity in order to maintain compliance with the conditions of this General Permit.

4. Duty to Mitigate

The LUP discharger shall take all responsible steps to minimize or prevent any discharge in violation of this General Permit, which has a reasonable likelihood of adversely affecting human health or the environment.

5. Proper Operation and Maintenance

The LUP discharger shall at all times properly operate and maintain any facilities and systems of treatment and control (and related appurtenances) which are installed or used by the discharger to achieve compliance with the conditions of this General Permit and with the requirements of the Storm Water Pollution Prevention Plan (SWPPP). Proper operation and maintenance also includes adequate laboratory controls and appropriate quality assurance procedures. Proper operation and maintenance may require the operation of backup or auxiliary facilities or similar systems installed by a discharger when necessary to achieve compliance with the conditions of this General Permit.

6. Property Rights

This General Permit does not convey any property rights of any sort or any exclusive privileges, nor does it authorize any injury to private property or any invasion of personal rights, nor does it authorize any infringement of Federal, State, or local laws or regulations.

7. Duty to Maintain Records and Provide Information

a. The LUP discharger shall maintain a paper or electronic copy of all required records, including a copy of this General Permit, for three years from the date generated or date submitted, whichever is last. These records shall be kept at the construction site or in a crew

ED_002781A_00003896-00632

member's vehicle until construction is completed, and shall be made available upon request.

b. The LUP discharger shall furnish the Regional Water Board, State Water Board, or USEPA, within a reasonable time, any requested information to determine compliance with this General Permit. The LUP discharger shall also furnish, upon request, copies of records that are required to be kept by this General Permit.

8. Inspection and Entry

The LUP discharger shall allow the Regional Water Board, State Water Board, USEPA, and/or, in the case of construction sites which discharge through a municipal separate storm sewer, an authorized representative of the municipal operator of the separate storm sewer system receiving the discharge, upon the presentation of credentials and other documents as may be required by law, to:

a. Enter upon the discharger's premises at reasonable times where a regulated construction activity is being conducted or where records must be kept under the conditions of this General Permit;

b. Access and copy at reasonable times any records that must be kept under the conditions of this General Permit;

c. Inspect at reasonable times the complete construction site, including any off-site staging areas or material storage areas, and the erosion/sediment controls; and

d. Sample or monitor at reasonable times for the purpose of ensuring General Permit compliance.

9. Electronic Signature and Certification Requirements

a. All Permit Registration Documents (PRDs) and Notices of Termination (NOTs) shall be electronically signed, certified, and submitted via SMARTS to the State Water Board. Either the Legally Responsible Person (LRP), as defined in Appendix 5 – Glossary, or a person legally authorized to sign and certify PRDs and NOTs on behalf of the LRP (the LRP's Approved Signatory, as defined in Appendix 5 - Glossary) must submit all information electronically via SMARTS.

b. Changes to Authorization. If an Approved Signatory's authorization is no longer accurate, a new authorization satisfying the requirements of paragraph (a) of this section must be submitted via SMARTS prior to or

ED_002781A_00003896-00633

together with any reports, information or applications to be signed by an Approved Signatory.

c. All SWPPP revisions, annual reports, or other information required by the General Permit (other than PRDs and NOTs) or requested by the Regional Water Board, State Water Board, USEPA, or local storm water management agency shall be certified and submitted by the LRP or the LRP's Approved Signatory.

10. Certification

Any person signing documents under Section E.9 above, shall make the following certification:

"I certify under penalty of law that this document and all attachments were prepared under my direction or supervision in accordance with a system designed to assure that qualified personnel properly gather and evaluate the information submitted. Based on my inquiry of the person or persons who manage the system or those persons directly responsible for gathering the information, to the best of my knowledge and belief, the information submitted is, true, accurate, and complete. I am aware that there are significant penalties for submitting false information, including the possibility of fine and imprisonment for knowing violations."

11. Anticipated Noncompliance

The LUP discharger shall give advance notice to the Regional Water Board and local storm water management agency of any planned changes in the construction activity, which may result in noncompliance with General Permit requirements.

12. Penalties for Falsification of Reports

Section 309(c)(4) of the CWA provides that any person who knowingly makes any false material statement, representation, or certification in any record or other document submitted or required to be maintained under this General Permit, including reports of compliance or noncompliance shall upon conviction, be punished by a fine of not more than $10,000 or by imprisonment for not more than two years or by both.

13. Oil and Hazardous Substance Liability

Nothing in this General Permit shall be construed to preclude the institution of any legal action or relieve the discharger from any responsibilities, liabilities, or penalties to which the LUP discharger is or may be subject to under Section 311 of the CWA.

14. Severability

The provisions of this General Permit are severable; and, if any provision of this General Permit or the application of any provision of this General Permit to any circumstance is held invalid, the application of such provision to other circumstances and the remainder of this General Permit shall not be affected thereby.

15. Reopener Clause

This General Permit may be modified, revoked and reissued, or terminated for cause due to promulgation of amended regulations, receipt of USEPA guidance concerning regulated activities, judicial decision, or in accordance with 40 Code of Federal Regulations (CFR) 122.62, 122.63, 122.64, and 124.5.

16. Penalties for Violations of Permit Conditions

a. Section 309 of the CWA provides significant penalties for any person who violates a permit condition implementing Sections 301, 302, 306, 307, 308, 318, or 405 of the CWA or any permit condition or limitation implementing any such section in a permit issued under Section 402. Any person who violates any permit condition of this General Permit is subject to a civil penalty not to exceed $37,500[7] per calendar day of such violation, as well as any other appropriate sanction provided by Section 309 of the CWA.

b. The Porter-Cologne Water Quality Control Act also provides for civil and criminal penalties, which in some cases are greater than those under the CWA.

17. Transfers

This General Permit is not transferable. A new LRP of an ongoing construction activity must submit PRDs in accordance with the requirements of this General Permit to be authorized to discharge under this General Permit. An LRP who is a property owner with active General Permit coverage who sells a fraction or all the land shall inform the new property owner(s) of the requirements of this General Permit.

18. Continuation of Expired Permit

This General Permit continues in force and effect until a new General Permit is issued or the SWRCB rescinds this General Permit. Only those

[7] May be further adjusted in accordance with the Federal Civil Penalties Inflation Adjustment Act

ED_002781A_00003896-00635

dischargers authorized to discharge under the expiring General Permit are covered by the continued General Permit.

F. EFFLUENT STANDARDS

1. Narrative Effluent Limitations

a. LUP dischargers shall ensure that storm water discharges and authorized non-storm water discharges regulated by this General Permit do not contain a hazardous substance equal to or in excess of reportable quantities established in 40 C.F.R. §§ 117.3 and 302.4, unless a separate NPDES Permit has been issued to regulate those discharges.

b. LUP dischargers shall minimize or prevent pollutants in storm water discharges and authorized non-storm water discharges through the use of structural or non-structural controls, structures, and management practices that achieve BAT for toxic and non-conventional pollutants and BCT for conventional pollutants.

2. Numeric Effluent Limitations (NELs)

Table 1. Numeric Effluent Limitations, Numeric Action Levels, Test Methods, Detection Limits, and Reporting Units

Parameter	Test Method	Discharge Type	Min. Detection Limit	Units	Numeric Action Level	Numeric Effluent Limitation
pH	Field test with calibrated portable instrument	LUP Type 2	0.2	pH units	lower NAL = 6.5 upper NAL = 8.5	N/A
		LUP Type 3			lower NAL = 6.5 upper NAL = 8.5	lower NEL = 6.0 upper NEL = 9.0
Turbidity	EPA 0180.1 and/or field test with calibrated portable instrument	LUP Type 2	1	NTU	250 NTU	N/A
		LUP Type 3			250 NTU	500 NTU

a. Numeric Effluent Limitations (NELs):

i **Storm Event, Daily Average pH Limits –** For LUP Type 3 dischargers, the daily average pH of storm water and non-storm water discharges shall be within the ranges specified in Table 1 during any project phase where there is a "high risk of pH discharge."[8]

ii **Storm Event Daily Average Turbidity Limit –** For LUP Type 3 dischargers, the daily average turbidity of storm water and non-storm water discharges shall not exceed 500 NTU.

[8] A period of high risk of pH discharge is defined as a project's complete utilities phase, complete vertical build phase, and any portion of any phase where significant amounts of materials are placed directly on the land at the site in a manner that could result in significant alterations of the background pH of the discharges.

b. If a daily average sample result is outside the range of pH NELs (i.e., is below the lower NEL for pH or exceeds the upper NEL for pH) or exceeds the turbidity NEL (as listed in Table 1), the discharger is in violation of this General Permit and shall electronically file the results in violation within 5 business days of obtaining the results.

c. Compliance Storm Event:

Discharges of storm water from LUP Type 3 sites shall comply with applicable NELs (above) unless the storm event causing the discharges is determined after the fact to be equal to or larger than the Compliance Storm Event (expressed in inches of rainfall). The Compliance Storm Event for LUP Type 3 discharges is the 5-year, 24-hour storm (expressed in tenths of an inch of rainfall), as determined by using these maps:

http://www.wrcc.dri.edu/pcpnfreq/nca5y24.gif
http://www.wrcc.dri.edu/pcpnfreq/sca5y24.gif

Compliance storm event verification shall be done by reporting on-site rain gauge readings as well as nearby governmental rain gauge readings.

d. Dischargers shall not be required to comply with NELs if the site receives run-on from a forest fire or any other natural disaster.

3. Numeric Action Levels (NALs)

a. For LUP Type 2 and 3 dischargers, the lower storm event daily average NAL for pH is 6.5 pH units and the upper storm event daily average NAL for pH is 8.5 pH units. The LUP discharger shall take actions as described below if the storm event daily average discharge is outside of this range of pH values.

b. For LUP Type 2 and 3 dischargers, the storm event daily average NAL for turbidity is 250 NTU. The discharger shall take actions as described below if the storm event daily average discharge is outside of this range of turbidity values.

c. Whenever daily average analytical effluent monitoring results indicate that the discharge is below the lower NAL for pH, exceeds the upper NAL for pH, or exceeds the turbidity NAL (as listed in Table 1), the LUP discharger shall conduct a construction site and run-on evaluation to determine whether pollutant source(s) associated with the site's construction activity may have caused or contributed to the NAL

exceedance and shall immediately implement corrective actions if they are needed.

d. The site evaluation will be documented in the SWPPP and specifically address whether the source(s) of the pollutants causing the exceedance of the NAL:

i Are related to the construction activities and whether additional BMPs or SWPPP implementation measures are required to (1) meet BAT/BCT requirements; (2) reduce or prevent pollutants in storm water discharges from causing exceedances of receiving water objectives; and (3) determine what corrective action(s) were taken or will be taken and with a description of the schedule for completion.

AND/OR:

ii Are related to the run-on associated with the construction site location and whether additional BMPs or SWPPP implementation measures are required to (1) meet BAT/BCT requirements; (2) reduce or prevent pollutants in storm water discharges from causing exceedances of receiving water objectives; and (3) decide what corrective action(s) were taken or will be taken, including a description of the schedule for completion.

G. RECEIVING WATER LIMITATIONS

1. LUP dischargers shall ensure that storm water discharges and authorized non-storm water discharges to any surface or ground water will not adversely affect human health or the environment.

2. LUP dischargers shall ensure that storm water discharges and authorized non-storm water discharges will not contain pollutants in quantities that threaten to cause pollution or a public nuisance.

3. LUP dischargers shall ensure that storm water discharges and authorized non-storm water discharges will not contain pollutants that cause or contribute to an exceedance of any applicable water quality objectives or water quality standards (collectively, WQS) contained in a Statewide Water Quality Control Plan, the California Toxics Rule, the National Toxics Rule, or the applicable Regional Water Board's Water Quality Control Plan (Basin Plan).

H. TRAINING QUALIFICATIONS

1. General

All persons responsible for implementing requirements of this General Permit shall be appropriately trained. Training should be both formal and informal, occur on an ongoing basis, and should include training offered by recognized governmental agencies or professional organizations. Persons responsible for preparing, amending and certifying SWPPPs shall comply with the requirements in this Section H.

2. SWPPP Certification Requirements

a. **Qualified SWPPP Developer:** The LUP discharger shall ensure that all SWPPPs be written, amended and certified by a Qualified SWPPP Developer (QSD). A QSD shall have one of the following registrations or certifications, and appropriate experience, as required for:

i A California registered professional civil engineer;

ii A California registered professional geologist or engineering geologist;

iii A California registered landscape architect;

iv A professional hydrologist registered through the American Institute of Hydrology;

v A certified professional in erosion and sediment control (CPESC) ™ registered through Enviro Cert International, Inc;

vi A certified professional in storm water quality (CPSWQ)™ registered through Enviro Cert International, Inc.; or

vii A certified professional in erosion and sediment control registered through the National Institute for Certification in Engineering Technologies (NICET).

Effective two years after the adoption date of this General Permit, a QSD shall have attended a State Water Board-sponsored or approved QSD training course.

b. The LUP discharger shall ensure that the SWPPP is written and amended, as needed, to address the specific circumstances for each construction site covered by this General Permit prior to commencement of construction activity for any stage.

c. The LUP discharger shall list the name and telephone number of the currently designated Qualified SWPPP Developer(s) in the SWPPP.

d. **Qualified SWPPP Practitioner:** The LUP discharger shall ensure that all elements of any SWPPP for each project will be implemented by a Qualified SWPPP Practitioner (QSP). A QSP is a person responsible for non-storm water and storm water visual observations, sampling and analysis, and for ensuring full compliance with the permit and implementation of all elements of the SWPPP. Effective two years from the date of adoption of this General Permit, a QSP shall be either a QSD or have one of the following certifications:

   i A certified erosion, sediment and storm water inspector registered through Certified Professional in Erosion and Sediment Control, Inc.; or

   ii A certified inspector of sediment and erosion control registered through Certified Inspector of Sediment and Erosion Control, Inc.

   Effective two years after the adoption date of this General Permit, a QSP shall have attended a State Water Board-sponsored or approved QSP training course.

e. The LUP discharger shall ensure that the SWPPP include a list of names of all contractors, subcontractors, and individuals who will be directed by the Qualified SWPPP Practitioner, and who is ultimately responsible for implementation of the SWPPP. This list shall include telephone numbers and work addresses. Specific areas of responsibility of each subcontractor and emergency contact numbers shall also be included.

f. The LUP discharger shall ensure that the SWPPP and each amendment be signed by the Qualified SWPPP Developer. The LUP discharger shall include a listing of the date of initial preparation and the dates of each amendment in the SWPPP.

I. TYPES OF LINEAR PROJECTS

This attachment establishes three types (Type 1, 2 & 3) of complexity for areas within an LUP or project section based on threat to water quality. Project area Types are determined through Attachment A.1.

The Type 1 requirements below establish the baseline requirements for all LUPs subject to this General Permit. Additional requirements for Type 2 and Type 3 LUPs are labeled.

1. **Type 1 LUPs**:

   LUP dischargers with areas of a LUP designated as Type 1 shall comply with the requirements in this Attachment. Type 1 LUPs are:

   a. Those construction areas where 70 percent or more of the construction activity occurs on a paved surface and where areas disturbed during construction will be returned to preconstruction conditions or equivalent protection established at the end of the construction activities for the day; or

   b. Where greater than 30 percent of construction activities occur within the non-paved shoulders or land immediately adjacent to paved surfaces, or where construction occurs on unpaved improved roads, including their shoulders or land immediately adjacent to them where:

      i Areas disturbed during construction will be returned to preconstruction conditions or equivalent protection is established at the end of the construction activities for the day to minimize the potential for erosion and sediment deposition, and

      ii Areas where established vegetation was disturbed during construction will be stabilized and re-vegetated by the end of project. When required, adequate temporary stabilization BMPs will be installed and maintained until vegetation is established to meet minimum cover requirements established in this General Permit for final stabilization.

   c. Where the risk determination is as follows:

      i Low sediment risk, low receiving water risk, or

      ii Low sediment risk, medium receiving water risk, or

      iii Medium sediment risk, low receiving water risk

2. **Type 2 LUPs**:

Type 2 LUPs are determined by the Combined Risk Matrix in Attachment A.1. Type 2 LUPs have the specified combination of risk:

d. High sediment risk, low receiving water risk, or

e. Medium sediment risk, medium receiving water risk, or

f. Low sediment risk, high receiving water risk

Receiving water risk is either considered "Low" for those areas of the project that are not in close proximity to a sensitive receiving watershed, "Medium" for those areas of the project within a sensitive receiving watershed yet outside of the flood plain of a sensitive receiving water body, and "High" where the soil disturbance is within close proximity to a sensitive receiving water body. Project sediment risk is calculated based on the Risk Factor Worksheet in Attachment C of this General Permit.

3. Type 3 LUPs:

Type 3 LUPs are determined by the Combined Risk Matrix in Attachment A.1. Type 3 LUPs have the specified combination of risk:

a. High sediment risk, high receiving water risk, or

b. High sediment risk, medium receiving water risk, or

c. Medium sediment risk, high receiving water risk

Receiving water risk is either considered "Medium" for those areas of the project within a sensitive receiving watershed yet outside of the flood plain of a sensitive receiving water body, or "High" where the soil disturbance is within close proximity to a sensitive receiving water body. Project sediment risk is calculated based on the Risk Factor Worksheet in Attachment C.

J. LUP TYPE-SPECIFIC REQUIREMENTS

1. Effluent Standards

a. Narrative – LUP dischargers shall comply with the narrative effluent standards below.

i Storm water discharges and authorized non-storm water discharges regulated by this General Permit shall not contain a hazardous substance equal to or in excess of reportable quantities

established in 40 C.F.R. §§ 117.3 and 302.4, unless a separate NPDES Permit has been issued to regulate those discharges.

ii LUP dischargers shall minimize or prevent pollutants in storm water discharges and authorized non-storm water discharges through the use of controls, structures, and management practices that achieve BAT for toxic and non-conventional pollutants and BCT for conventional pollutants.

b. Numeric – LUP Type 1 dischargers are not subject to a numeric effluent standard

c. Numeric –LUP Type 2 dischargers are subject to a pH NAL of 6.5-8.5, and a turbidity NAL of 250 NTU.

d. Numeric – LUP Type 3 dischargers are subject to a pH NAL of 6.5-8.5, and a turbidity NAL of 250 NTU. In addition, LUP Type 3 dischargers are subject to a pH NEL of 6.0-9.0 and a turbidity NEL of 500 NTU.

2. Good Site Management "Housekeeping"

a. LUP dischargers shall implement good site management (i.e., "housekeeping") measures for construction materials that could potentially be a threat to water quality if discharged. At a minimum, the good housekeeping measures shall consist of the following:

i Identify the products used and/or expected to be used and the end products that are produced and/or expected to be produced. This does not include materials and equipment that are designed to be outdoors and exposed to environmental conditions (i.e. poles, equipment pads, cabinets, conductors, insulators, bricks, etc.).

ii Cover and berm loose stockpiled construction materials that are not actively being used (i.e. soil, spoils, aggregate, fly-ash, stucco, hydrated lime, etc.).

iii Store chemicals in watertight containers (with appropriate secondary containment to prevent any spillage or leakage) or in a storage shed (completely enclosed).

iv Minimize exposure of construction materials to precipitation (not applicable to materials designed to be outdoors and exposed to the environment).

v Implement BMPs to control the off-site tracking of loose construction and landscape materials.

b. LUP dischargers shall implement good housekeeping measures for waste management, which, at a minimum, shall consist of the following:

i Prevent disposal of any rinse or wash waters or materials on impervious or pervious site surfaces or into the storm drain system.

ii Ensure the containment of sanitation facilities (e.g., portable toilets) to prevent discharges of pollutants to the storm water drainage system or receiving water.

iii Clean or replace sanitation facilities and inspecting them regularly for leaks and spills.

iv Cover waste disposal containers at the end of every business day and during a rain event.

v Prevent discharges from waste disposal containers to the storm water drainage system or receiving water.

vi Contain and securely protect stockpiled waste material from wind and rain at all times unless actively being used.

vii Implement procedures that effectively address hazardous and non-hazardous spills.

viii Develop a spill response and implementation element of the SWPPP prior to commencement of construction activities. The SWPPP shall require that:

(1) Equipment and materials for cleanup of spills shall be available on site and that spills and leaks shall be cleaned up immediately and disposed of properly; and

(2) Appropriate spill response personnel are assigned and trained.

ix Ensure the containment of concrete washout areas and other washout areas that may contain additional pollutants so there is no discharge into the underlying soil and onto the surrounding areas.

c. LUP dischargers shall implement good housekeeping for vehicle storage and maintenance, which, at a minimum, shall consist of the following:

i Prevent oil, grease, or fuel from leaking into the ground, storm drains or surface waters.

ii Implement appropriate BMPs whenever equipment or vehicles are fueled, maintained or stored.

iii Clean leaks immediately and disposing of leaked materials properly.

d. LUP dischargers shall implement good housekeeping for landscape materials, which, at a minimum, shall consist of the following:

i Contain stockpiled materials such as mulches and topsoil when they are not actively being used.

ii Contain fertilizers and other landscape materials when they are not actively being used.

iii Discontinue the application of any erodible landscape material at least 2 days before a forecasted rain event[9] or during periods of precipitation.

iv Applying erodible landscape material at quantities and application rates according to manufacture recommendations or based on written specifications by knowledgeable and experienced field personnel.

v Stacking erodible landscape material on pallets and covering or storing such materials when not being used or applied.

e. LUP dischargers shall conduct an assessment and create a list of potential pollutant sources and identify any areas of the site where additional BMPs are necessary to reduce or prevent pollutants in storm water discharges and authorized non-storm water discharges. This potential pollutant list shall be kept with the SWPPP and shall identify all non-visible pollutants which are known, or should be known, to occur on the construction site. At a minimum, when developing BMPs, LUP dischargers shall do the following:

i Consider the quantity, physical characteristics (e.g., liquid, powder, solid), and locations of each potential pollutant source handled, produced, stored, recycled, or disposed of at the site.

[9] 50% or greater chance of producing precipitation.

ED_002781A_00003896-00646

ii Consider the degree to which pollutants associated with those materials may be exposed to and mobilized by contact with storm water.

iii Consider the direct and indirect pathways that pollutants may be exposed to storm water or authorized non-storm water discharges. This shall include an assessment of past spills or leaks, non-storm water discharges, and discharges from adjoining areas.

iv Ensure retention of sampling, visual observation, and inspection records.

v Ensure effectiveness of existing BMPs to reduce or prevent pollutants in storm water discharges and authorized non-storm water discharges.

f. LUP dischargers shall implement good housekeeping measures on the construction site to control the air deposition of site materials and from site operations.

3. Non-Storm Water Management

a. LUP dischargers shall implement measures to control all non-storm water discharges during construction.

b. LUP dischargers shall wash vehicles in such a manner as to prevent non-storm water discharges to surface waters or MS4 drainage systems.

c. LUP dischargers shall clean streets in such a manner as to prevent unauthorized non-storm water discharges from reaching surface water or MS4 drainage systems.

4. Erosion Control

a. LUP dischargers shall implement effective wind erosion control.

b. LUP dischargers shall provide effective soil cover for inactive[10] areas and all finished slopes, and utility backfill.

[10] Areas of construction activity that have been disturbed and are not scheduled to be re-disturbed for at least 14 days

ED_002781A_00003896-00647

c. LUP dischargers shall limit the use of plastic materials when more sustainable, environmentally friendly alternatives exist. Where plastic materials are deemed necessary, the discharger shall consider the use of plastic materials resistant to solar degradation.

5. Sediment Controls

a. LUP dischargers shall establish and maintain effective perimeter controls as needed, and implement effective BMPs for all construction entrances and exits to sufficiently control erosion and sediment discharges from the site.

b. On sites where sediment basins are to be used, LUP dischargers shall, at minimum, design sediment basins according to the guidance provided in CASQA's Construction BMP Handbook.

c. **Additional LUP Type 2 & 3 Requirement:** LUP Type 2 & 3 dischargers shall apply linear sediment controls along the toe of the slope, face of the slope, and at the grade breaks of exposed slopes to comply with sheet flow lengths[11] in accordance with Table 2 below.

Table 2 – Critical Slope/Sheet Flow Length Combinations

Slope Percentage	Sheet flow length not to exceed
0-25%	20 feet
25-50%	15 feet
Over 50%	10 feet

d. **Additional LUP Type 2 & 3 Requirement:** LUP Type 2 & 3 dischargers shall ensure that construction activity traffic to and from the project is limited to entrances and exits that employ effective controls to prevent off-site tracking of sediment.

e. **Additional LUP Type 2 & 3 Requirement:** LUP Type 2 & 3 dischargers shall ensure that all storm drain inlets and perimeter controls, runoff control BMPs, and pollutant controls at entrances and exits (e.g. tire washoff locations) are maintained and protected from activities that reduce their effectiveness.

f. **Additional LUP Type 2 & 3 Requirement:** LUP Type 2 & 3 dischargers shall inspect all immediate access roads. At a minimum daily and prior to any rain event, the discharger shall remove any

[11] Sheet flow length is the length that shallow, low velocity flow travels across a site.

sediment or other construction activity-related materials that are deposited on the roads (by vacuuming or sweeping).

g. **Additional LUP Type 3 Requirement:** The Regional Water Board may require LUP Type 3 dischargers to implement additional site-specific sediment control requirements if the implementation of the other requirements in this section are not adequately protecting the receiving waters.

6. Run-on and Run-off Controls

a. LUP dischargers shall effectively manage all run-on, all runoff within the site and all runoff that discharges off the site. Run-on from off site-shall be directed away from all disturbed areas or shall collectively be in compliance with the effluent limitations in this Attachment.

b. Run-on and runoff controls are not required for Type 1 LUPs unless the evaluation of quantity and quality of run-on and runoff deems them necessary or visual inspections show that the site requires such controls.

7. Inspection, Maintenance and Repair

a. All inspection, maintenance repair and sampling activities at the discharger's LUP location shall be performed or supervised by a QSP representing the discharger. The QSP may delegate any or all of these activities to an employee trained to do the task(s) appropriately, but shall ensure adequate deployment.

b. LUP dischargers shall conduct visual inspections and observations daily during working hours (not recorded). At least once each 24-hour period during extended storm events, **LUP Type 2 & 3 dischargers** shall conduct visual inspections to identify and record BMPs that need maintenance to operate effectively, that have failed, or that could fail to operate as intended. Inspectors shall be the QSP or be trained by the QSP.

c. Upon identifying failures or other shortcomings, as directed by the QSP, LUP dischargers shall begin implementing repairs or design changes to BMPs within 72 hours of identification and complete the changes as soon as possible.

d. For each pre- and post-rain event inspection required, LUP dischargers shall complete an inspection checklist, using a form provided by the State Water Board or Regional Water Board or in an alternative format that includes the information described below.

ED_002781A_00003896-00649

e. The LUP discharger shall ensure that the checklist remains on-site or with the SWPPP. At a minimum, an inspection checklist should include:

i Inspection date and date the inspection report was written.

ii Weather information, including presence or absence of precipitation, estimate of beginning of qualifying storm event, duration of event, time elapsed since last storm, and approximate amount of rainfall in inches.

iii Site information, including stage of construction, activities completed, and approximate area of the site exposed.

iv A description of any BMPs evaluated and any deficiencies noted.

v If the construction site is safely accessible during inclement weather, list the observations of all BMPs: erosion controls, sediment controls, chemical and waste controls, and non-storm water controls. Otherwise, list the results of visual inspections at all relevant outfalls, discharge points, downstream locations and any projected maintenance activities.

vi Report the presence of noticeable odors or of any visible sheen on the surface of any discharges.

vii Any corrective actions required, including any necessary changes to the SWPPP and the associated implementation dates.

viii Photographs taken during the inspection, if any.

ix Inspector's name, title, and signature.

ED_002781A_00003896-00650

K. STORM WATER POLLUTION PREVENTION PLAN (SWPPP) REQUIREMENTS

1. Objectives

SWPPPs for all LUPs shall be developed and amended or revised by a QSD. The SWPPP shall be designed to address the following objectives:

a. All pollutants and their sources, including sources of sediment, associated with construction activities associated with LUP activity are controlled;

b. All non-storm water discharges are identified and either eliminated, controlled, or treated;

c. BMPs are effective and result in the reduction or elimination of pollutants in storm water discharges and authorized non-storm water discharges from LUPs during construction; and

d. Stabilization BMPs installed to reduce or eliminate pollutants after construction is completed are effective and maintained.

2. SWPPP Implementation Schedule

a. LUPs for which PRDs have been submitted to the State Water Board shall develop a site/project location SWPPP prior to the start of land-disturbing activity in accordance with this Section and shall implement the SWPPP concurrently with commencement of soil-disturbing activities.

b. For an ongoing LUP involving a change in the LRP, the new LRP shall review the existing SWPPP and amend it, if necessary, or develop a new SWPPP within 15 calendar days to conform to the requirements set forth in this General Permit.

3. Availability

The SWPPP shall be available at the construction site during working hours while construction is occurring and shall be made available upon request by a State or Municipal inspector. When the original SWPPP is retained by a crewmember in a construction vehicle and is not currently at the construction site, copies of the BMPs and map/drawing will be left with the field crew and the original SWPPP shall be made available via a request by radio/telephone.

L. REGIONAL WATER BOARD AUTHORITIES

1. Regional Water Boards shall administer the provisions of this General Permit. Administration of this General Permit may include, but is not limited to, requesting the submittal of SWPPPs, reviewing SWPPPs, reviewing monitoring and sampling and analysis reports, conducting compliance inspections, gathering site information by any medium including sampling, photo and video documentation, and taking enforcement actions.

2. Regional Water Boards may terminate coverage under this General Permit for dischargers who fail to comply with its requirements or where they determine that an individual NPDES permit is appropriate.

3. Regional Water Boards may issue separate permits for discharges of storm water associated with construction activity to individual dischargers, categories of dischargers, or dischargers in a geographic area. Upon issuance of such permits by a Regional Water Board, dischargers subject to those permits shall no longer be regulated by this General Permit.

4. Regional Water Boards may direct the discharger to reevaluate the LUP Type(s) for the project (or elements/areas of the project) and impose the appropriate level of requirements.

5. Regional Water Boards may terminate coverage under this General Permit for dischargers who negligently or with willful intent incorrectly determine or report their LUP Type (e.g., they determine themselves to be a LUP Type 1 when they are actually a Type 2).

6. Regional Water Boards may review PRDs and reject or accept applications for permit coverage or may require dischargers to submit a Report of Waste Discharge / NPDES permit application for Regional Water Board consideration of individual requirements.

7. Regional Water Boards may impose additional requirements on dischargers to satisfy TMDL implementation requirements or to satisfy provisions in their Basin Plans.

8. Regional Water Boards may require additional Monitoring and Reporting Program Requirements, including sampling and analysis of discharges to sediment-impaired water bodies.

9. Regional Water Boards may require dischargers to retain records for more than the three years required by this General Permit.

ED_002781A_00003896-00652

10. Based on an LUP's threat to water quality and complexity, the Regional Water Board may determine on a case-by-case basis that an LUP, or a portion of an LUP, is not eligible for the linear project requirements contained in this Attachment, and require that the discharger comply with all standard requirements in this General Permit.

11. The Regional Water Board may require additional monitoring and reporting program requirements including sampling and analysis of discharges to CWA § 303(d)-listed water bodies. Additional requirements imposed by the Regional Water Board shall be consistent with the overall monitoring effort in the receiving waters.

M. MONITORING AND REPORTING REQUIREMENTS

Table 3. LUP Summary of Monitoring Requirements

LUP Type	Visual Inspections				Sample Collection		
	Daily Site BMP	Pre-storm Event Baseline	Daily Storm BMP	Post Storm	Storm Water Discharge	Receiving Water	Non-Visible (when applicable)
1	X						x
2	X	X	X	X	X		x
3	X	X	X	X	X	X	x

1. Objectives

LUP dischargers shall prepare a monitoring and reporting program (M&RP) prior to the start of construction and immediately implement the program at the start of construction for LUPs. The monitoring program must be implemented at the appropriate level to protect water quality at all times throughout the life of the project. The M&RP must be a part of the SWPPP, included as an appendix or separate SWPPP chapter.

2. M&RP Implementation Schedule

a. LUP dischargers shall implement the requirements of this Section at the time of commencement of construction activity. LUP dischargers are responsible for implementing these requirements until construction activity is complete and the site is stabilized.

b. LUP dischargers shall revise the M&RP when:

i Site conditions or construction activities change such that a change in monitoring is required to comply with the requirements and intent of this General Permit.

ii The Regional Water Board requires the discharger to revise its M&RP based on its review of the document. Revisions may include, but not be limited to, conducting additional site inspections, submitting reports, and certifications. Revisions shall be submitted via postal mail or electronic e-mail.

ED_002781A_00003896-00654

iii The Regional Water Board may require additional monitoring and reporting program requirements including sampling and analysis of discharges to CWA § 303(d)-listed water bodies. Additional requirements imposed by the Regional Water Board shall be consistent with the overall monitoring effort in the receiving waters.

3. LUP Type 1 Monitoring and Reporting Requirements

a. LUP Type 1 Inspection Requirements

i LUP Type 1 dischargers shall ensure that all inspections are conducted by trained personnel. The name(s) and contact number(s) of the assigned inspection personnel should be listed in the SWPPP.

ii LUP Type 1 dischargers shall ensure that all visual inspections are conducted daily during working hours and in conjunction with other daily activities in areas where active construction is occurring.

iii LUP Type 1 dischargers shall ensure that photographs of the site taken before, during, and after storm events are taken during inspections, and submitted through the State Water Board's SMARTS website once every three rain events.

iv LUP Type 1 dischargers shall conduct daily visual inspections to verify that:

(1) Appropriate BMPs for storm water and non-storm water are being implemented in areas where active construction is occurring (including staging areas);

(2) Project excavations are closed, with properly protected spoils, and that road surfaces are cleaned of excavated material and construction materials such as chemicals by either removing or storing the material in protective storage containers at the end of every construction day;

(3) Land areas disturbed during construction are returned to pre-construction conditions or an equivalent protection is used at the end of each workday to eliminate or minimize erosion and the possible discharge of sediment or other pollutants during a rain event.

v Inspections may be discontinued in non-active construction areas where soil-disturbing activities are completed and final soil stabilization is achieved (e.g., paving is completed, substructures

ED_002781A_00003896-00655

are installed, vegetation meets minimum cover requirements for final stabilization, or other stabilization requirements are met).

vi Inspection programs are required for LUP Type 1 projects where temporary and permanent stabilization BMPs are installed and are to be monitored after active construction is completed. Inspection activities shall continue until adequate permanent stabilization is established and, in areas where re-vegetation is chosen, until minimum vegetative coverage is established in accordance with Section C.1 of this Attachment.

b. LUP Type 1 Monitoring Requirements for Non-Visible Pollutants

LUP Type 1 dischargers shall implement sampling and analysis requirements to monitor non-visible pollutants associated with (1) construction sites; (2) activities producing pollutants that are not visually detectable in storm water discharges; and (3) activities which could cause or contribute to an exceedance of water quality objectives in the receiving waters.

i Sampling and analysis for non-visible pollutants is only required where the LUP Type 1 discharger believes pollutants associated with construction activities have the potential to be discharged with storm water runoff due to a spill or in the event there was a breach, malfunction, failure and/or leak of any BMP. Also, failure to implement BMPs may require sample collection.

(1) Visual observations made during the monitoring program described above will help the LUP Type 1 discharger determine when to collect samples.

(2) The LUP Type 1 discharger is not required to sample if one of the conditions described above (e.g., breach or spill) occurs and the site is cleaned of material and pollutants and/or BMPs are implemented prior to the next storm event.

ii LUP Type 1 dischargers shall collect samples down-gradient from all discharge locations where the visual observations were made triggering the monitoring, and which can be safely accessed. For sites where sampling and analysis is required, personnel trained in water quality sampling procedures shall collect storm water samples.

iii If sampling for non-visible pollutant parameters is required, LUP Type 1 dischargers shall ensure that samples be analyzed for parameters indicating the presence of pollutants identified in the pollutant source assessment required in Section J.2.a.i.

ED_002781A_00003896-00656

iv LUP Type 1 dischargers shall collect samples during the first two hours of discharge from rain events that occur during business hours and which generate runoff.

v LUP Type 1 dischargers shall ensure that a sufficiently large sample of storm water that has not come into contact with the disturbed soil or the materials stored or used on-site (uncontaminated sample[12]) will be collected for comparison with the discharge sample. Samples shall be collected during the first two hours of discharge from rain events that occur during daylight hours and which generate runoff.

vi LUP Type 1 dischargers shall compare the uncontaminated sample to the samples of discharge using field analysis or through laboratory analysis. Analyses may include, but are not limited to, indicator parameters such as: pH, specific conductance, dissolved oxygen, conductivity, salinity, and Total Dissolved Solids (TDS).

vii For laboratory analyses, all sampling, sample preservation, and other analyses must be conducted according to test procedures pursuant to 40 C.F.R. Part 136. LUP Type 1 dischargers shall ensure that field samples are collected and analyzed according to manufacturer specifications of the sampling devices employed. Portable meters shall be calibrated according to manufacturer's specification.

viii LUP Type 1 dischargers shall ensure that all field and/or analytical data are kept in the SWPPP document.

c. <u>LUP Type 1 Visual Observation Exceptions</u>

i LUP Type 1 dischargers shall be prepared to collect samples and conduct visual observation (inspections) to meet the minimum visual observation requirements of this Attachment. The Type 1 LUP discharger is not required to physically collect samples or conduct visual observation (inspections) under the following conditions:

(1) During dangerous weather conditions such as flooding and electrical storms;

(2) Outside of scheduled site business hours.

(3) When access to the site is unsafe due to storm events.

[12] Sample collected at a location unaffected by contruction activities.

ED_002781A_00003896-00657

ii If the LUP Type 1 discharger does not collect the required samples or visual observation (inspections) due to these exceptions, an explanation why the sampling or visual observation (inspections) were not conducted shall be included in both the SWPPP and the Annual Report.

d. Particle Size Analysis for Risk Justification

LUP Type 1 dischargers utilizing justifying an alternative project risk shall report a soil particle size analysis used to determine the RUSLE K-Factor. ASTM D-422 (Standard Test Method for Particle-Size Analysis of Soils), as revised, shall be used to determine the percentages of sand, very fine sand, silt, and clay on the site.

4. LUP Type 2 & 3 Monitoring and Reporting Requirements

a. LUP Type 2 & 3 Inspection Requirements

i LUP Type 2 & 3 dischargers shall ensure that all inspections are conducted by trained personnel. The name(s) and contact number(s) of the assigned inspection personnel should be listed in the SWPPP.

ii LUP Type 2 & 3 dischargers shall ensure that all visual inspections are conducted daily during working hours and in conjunction with other daily activities in areas where active construction is occurring.

iii LUP Type 2 & 3 dischargers shall ensure that photographs of the site taken before, during, and after storm events are taken during inspections, and submitted through the State Water Board's SMARTS website once every three rain events.

iv LUP Type 2 & 3 dischargers shall conduct daily visual inspections to verify that appropriate BMPs for storm water and non-storm water are being implemented and in place in areas where active construction is occurring (including staging areas).

v LUP Type 2 & 3 dischargers shall conduct inspections of the construction site prior to anticipated storm events, during extended storm events, and after actual storm events to identify areas contributing to a discharge of storm water associated with construction activity. Pre-storm inspections are to ensure that BMPs are properly installed and maintained; post-storm inspections are to assure that BMPs have functioned adequately. During

ED_002781A_00003896-00658

extended storm events, inspections shall be required during normal working hours for each 24-hour period.

vi Inspections may be discontinued in non-active construction areas where soil-disturbing activities are completed and final soil stabilization is achieved (e.g., paving is completed, substructures are installed, vegetation meets minimum cover requirements for final stabilization, or other stabilization requirements are met).

vii LUP Type 2 & 3 dischargers shall implement a monitoring program for inspecting projects that require temporary and permanent stabilization BMPs after active construction is complete. Inspections shall ensure that the BMPs are adequate and maintained. Inspection activities shall continue until adequate permanent stabilization is established and, in vegetated areas, until minimum vegetative coverage is established in accordance with Section C.1 of this Attachment.

viii If possible, LUP Type 2 & 3 dischargers shall install a rain gauge on-site at an accessible and secure location with readings made during all storm event inspections. When readings are unavailable, data from the closest rain gauge with publically available data may be used.

ix LUP Type 2 & 3 dischargers shall Include and maintain a log of the inspections conducted in the SWPPP. The log will provide the date and time of the inspection and who conducted the inspection.

b. LUP Type 2 & 3 Storm Water Effluent Monitoring Requirements

Table 4. LUP Type 2 & 3 Effluent Monitoring Requirements

LUP Type	Frequency	Effluent Monitoring
2	Minimum of 3 samples per day characterizing discharges associated with construction activity from the project active areas of construction.	Turbidity, pH, and non-visible pollutant parameters (if applicable)
3	Minimum of 3 samples per day characterizing discharges associated with construction activity from the project active areas of construction.	turbidity, pH, suspended sediment concentrations (SSC)[13] (only if turbidity NEL exceeded), plus non-visible pollutant parameters (if applicable)

i LUP Type 2 & 3 dischargers shall collect storm water grab samples from sampling locations characterizing discharges associated with

[13] Suspended Sediment Concentration monitoring is required for any Type 3 area that exceeds its turbidity NEL.

ED_002781A_00003896-00659

activity from the LUP active areas of construction. At a minimum, 3 samples shall be collected per day of discharge.

ii LUP Type 2 & 3 dischargers shall collect samples of stored or contained storm water that is discharged subsequent to a storm event producing precipitation of ½ inch or more at the time of discharge.

iii LUP Type 2 & 3 dischargers shall ensure that storm water grab sample(s) obtained be representative of the flow and characteristics of the discharge.

iv LUP Type 2 & 3 dischargers shall analyze their effluent samples for:

(1) pH and turbidity
(2) Any additional parameter for which monitoring is required by the Regional Water Board.

v LUP Type 3 dischargers that have violated the turbidity daily average NEL shall analyze subsequent effluent samples for turbidity and SSC.

c. <u>LUP Type 2 & 3 Storm Water Effluent Sampling Locations</u>

i LUP Type 2 & 3 dischargers shall perform sampling and analysis of storm water discharges to characterize discharges associated with construction activity from the entire disturbed project or area.

ii LUP Type 2 & 3 dischargers may monitor and report run-on from surrounding areas if there is reason to believe run-on may contribute to exceedance of NALs or NELs (applicable to Type 3).

iii LUP Type 2 & 3 dischargers shall select analytical test methods from the list provided in Table 5 below.

iv LUP Type 2 & 3 dischargers shall ensure that all storm water sample collection preservation and handling shall be conducted in accordance with the "Storm Water Sample Collection and Handling Instructions" below.

d. <u>LUP Type 3 Receiving Water Monitoring Requirements</u>

i In the event that an LUP Type 3 discharger violates an applicable NEL contained in this General Permit and has a direct discharge to receiving waters, the LUP discharger shall subsequently sample Receiving Waters (RWs) for turbidity, pH (if applicable) and SSC.

ii LUP Type 3 dischargers that meet the project criteria in Appendix 3 of this General Permit and have more than 30 acres of soil disturbance in the project area or project section area designated as Type 3, shall comply with the Bioassessment requirements prior to commencement of construction activity.

iii LUP Type 3 dischargers shall obtain RW samples in accordance with the requirements of the Receiving Water Sampling Locations section (Section M.4.d of this Attachment).

e. LUP Type 3 Receiving Water Sampling Locations

i **Upstream/up-gradient RW samples**: LUP Type 3 dischargers shall obtain any required upstream/up-gradient receiving water samples from a representative and accessible location as close as possible to and upstream from the effluent discharge point.

ii **Downstream/down-gradient RW samples**: LUP Type 3 dischargers shall obtain any required downstream/down-gradient receiving water samples from a representative and accessible location as close as possible to and downstream from the effluent discharge point.

iii If two or more discharge locations discharge to the same receiving water, LUP Type 3 dischargers may sample the receiving water at a single upstream and downstream location.

f. LUP Type 2 & 3 Monitoring Requirements for Non-Visible Pollutants

LUP Type 2 & 3 dischargers shall implement sampling and analysis requirements to monitor non-visible pollutants associated with (1) construction sites; (2) activities producing pollutants that are not visually detectable in storm water discharges; and (3) activities which could cause or contribute to an exceedance of water quality objectives in the receiving waters.

i Sampling and analysis for non-visible pollutants is only required where LUP Type 2 & 3 dischargers believe pollutants associated with construction activities have the potential to be discharged with storm water runoff due to a spill or in the event there was a breach, malfunction, failure and/or leak of any BMP. Also, failure to implement BMPs may require sample collection.

(1) Visual observations made during the monitoring program described above will help LUP Type 2 & 3 dischargers determine when to collect samples.

(2) LUP Type 2 & 3 dischargers are not required to sample if one of the conditions described above (e.g., breach or spill) occurs and the site is cleaned of material and pollutants and/or BMPs are implemented prior to the next storm event.

ii LUP Type 2 & 3 dischargers shall collect samples down-gradient from the discharge locations where the visual observations were made triggering the monitoring and which can be safely accessed. For sites where sampling and analysis is required, personnel trained in water quality sampling procedures shall collect storm water samples.

iii If sampling for non-visible pollutant parameters is required, LUP Type 2 & 3 dischargers shall ensure that samples be analyzed for parameters indicating the presence of pollutants identified in the pollutant source assessment required in Section J.2.a.i.

iv LUP Type 2 & 3 dischargers shall collect samples during the first two hours of discharge from rain events that occur during business hours and which generate runoff.

v LUP Type 2 & 3 dischargers shall ensure that a sufficiently large sample of storm water that has not come into contact with the disturbed soil or the materials stored or used on-site (uncontaminated sample[14]) will be collected for comparison with the discharge sample. Samples shall be collected during the first two hours of discharge from rain events that occur during daylight hours and which generate runoff.

vi LUP Type 2 & 3 dischargers shall compare the uncontaminated sample to the samples of discharge using field analysis or through laboratory analysis. Analyses may include, but are not limited to, indicator parameters such as: pH, specific conductance, dissolved oxygen, conductivity, salinity, and Total Dissolved Solids (TDS).

vii For laboratory analyses, all sampling, sample preservation, and other analyses must be conducted according to test procedures pursuant to 40 C.F.R. Part 136. LUP Type 2 & 3 dischargers shall ensure that field samples are collected and analyzed according to manufacturer specifications of the sampling devices employed. Portable meters shall be calibrated according to manufacturer's specification.

viii LUP Type 2 & 3 dischargers shall ensure that all field and/or analytical data are kept in the SWPPP document.

[14] Sample collected at a location unaffected by construction activities

ED_002781A_00003896-00662

g. LUP Type 2 & 3 Visual Observation and Sample Collection Exceptions

i LUP Type 2 & 3 dischargers shall be prepared to collect samples and conduct visual observation (inspections) to meet the minimum visual observation requirements of this Attachment. Type 2 & 3 LUP dischargers are not required to physically collect samples or conduct visual observation (inspections) under the following conditions:

(1) During dangerous weather conditions such as flooding and electrical storms;

(2) Outside of scheduled site business hours.

(3) When access to the site is unsafe due to storm events.

ii If the LUP Type 2 or 3 discharger does not collect the required samples or visual observation (inspections) due to these exceptions, an explanation why the sampling or visual observation (inspections) were not conducted shall be included in both the SWPPP and the Annual Report.

h. LUP Type 2 & 3 Storm Water Sample Collection and Handling Instructions

LUP Type 2 & 3 dischargers shall refer to Table 5 below for test Methods, detection Limits, and reporting Units. During storm water sample collection and handling, the LUP Type 2 & 3 discharger shall:

i Identify the parameters required for testing and the number of storm water discharge points that will be sampled. Request the laboratory to provide the appropriate number of sample containers, types of containers, sample container labels, blank chain of custody forms, and sample preservation instructions.

ii Determine how to ship the samples to the laboratory. The testing laboratory should receive samples within 48 hours of the physical sampling (unless otherwise required by the laboratory). The options are to either deliver the samples to the laboratory, arrange to have the laboratory pick them up, or ship them overnight to the laboratory.

iii Use only the sample containers provided by the laboratory to collect and store samples. Use of any other type of containers could contaminate your samples.

iv Prevent sample contamination, by not touching, or putting anything into the sample containers before collecting storm water samples.

v Not overfilling sample containers. Overfilling can change the analytical results.

vi Tightly screw the cap of each sample container without stripping the threads of the cap.

vii Complete and attach a label to each sample container. The label shall identify the date and time of sample collection, the person taking the sample, and the sample collection location or discharge point. The label should also identify any sample containers that have been preserved.

viii Carefully pack sample containers into an ice chest or refrigerator to prevent breakage and maintain temperature during shipment. Remember to place frozen ice packs into the shipping container. Samples should be kept as close to 4° C (39° F) as possible until arriving at the laboratory. Do not freeze samples.

ix Complete a Chain of Custody form for each set of samples. The Chain of Custody form shall include the discharger's name, address, and phone number, identification of each sample container and sample collection point, person collecting the samples, the date and time each sample container was filled, and the analysis that is required for each sample container.

x Upon shipping/delivering the sample containers, obtain both the signatures of the persons relinquishing and receiving the sample containers.

xi Designate and train personnel to collect, maintain, and ship samples in accordance with the above sample protocols and good laboratory practices.

xii Refer to the Surface Water Ambient Monitoring Program's (SWAMP) Quality Assurance Management Plan (QAMP) for more information on sampling collection and analysis. See http://www.waterboards.ca.gov/water_issues/programs/swamp/[15]

QAMP Link:
http://www.waterboards.ca.gov/water_issues/programs/swamp/qamp.shtml

[15] Additional information regarding QAMP can be found at http://mpsl.mlml.calstate.edu/swqacompare.htm.

ED_002781A_00003896-00664

Table 5. Test Methods, Detection Limits, Reporting Units and Applicable NALs/NELs

Parameter	Test Method	Discharge Type	Min. Detection Limit	Reporting Units	Numeric Action Levels	Numeric Effluent Limitation (LUP Type 3)
pH	Field test with calibrated portable instrument	Type 2 & 3	0.2	pH units	Lower = 6.5 upper = 8.5	Lower = 6.0 upper = 9.0
Turbidity	EPA 0180.1 and/or field test with calibrated portable instrument	Type 2 & 3	1	NTU	250 NTU	500 NTU
SSC	ASTM Method D 3977-97[16]	Type 3 if NEL is exceeded	5	Mg/L	N/A	N/A
Bioassessment	(STE) Level I of (SAFIT),[17] fixed-count of 600 org/sample	Type 3 LUPs > 30 acres	N/A	N/A	N/A	N/A

i. <u>LUP Type 2 & 3 Monitoring Methods</u>

i The LUP Type 2 or 3 discharger's project M&RP shall include a description of the following items:

(1) Visual observation locations, visual observation procedures, and visual observation follow-up and tracking procedures.

(2) Sampling locations, and sample collection and handling procedures. This shall include detailed procedures for sample collection, storage, preservation, and shipping to the testing lab to assure that consistent quality control and quality assurance is maintained. Dischargers shall attach to the monitoring program a copy of the Chain of Custody form used when handling and shipping samples.

[16] ASTM, 1999, Standard Test Method for Determining Sediment Concentration in Water Samples: American Society of Testing and Materials, D 3977-97, Vol. 11.02, pp. 389-394

[17] The current SAFIT STEs (28 November 2006) list requirements for both the Level I and Level II taxonomic effort, and are located at: http://www.swrcb.ca.gov/swamp/docs/safit/ste_list.pdf. When new editions are published by SAFIT, they will supersede all previous editions. All editions will be posted at the State Water Board's SWAMP website.

(3) Identification of the analytical methods and related method detection limits (if applicable) for each parameter required in Section M.4.f above.

ii LUP Type 2 & 3 dischargers shall ensure that all sampling and sample preservation be in accordance with the current edition of "Standard Methods for the Examination of Water and Wastewater" (American Public Health Association). All monitoring instruments and equipment (including a discharger's own field instruments for measuring pH and turbidity) shall be calibrated and maintained in accordance with manufacturers' specifications to ensure accurate measurements. All laboratory analyses shall be conducted according to test procedures under 40 CFR Part 136, unless other test procedures have been specified in this General Permit or by the Regional Water Board. With the exception of field analysis conducted by the discharger for turbidity and pH, all analyses shall be sent to and conducted at a laboratory certified for such analyses by the State Department of Health Services (SSC exception). The LUP discharger shall conduct its own field analysis of pH and may conduct its own field analysis of turbidity if the discharger has sufficient capability (qualified and trained employees, properly calibrated and maintained field instruments, etc.) to adequately perform the field analysis.

j. LUP Type 2 & 3 Analytical Methods

LUP Type 2 & 3 dischargers shall refer to Table 5 above for test Methods, detection Limits, and reporting Units.

i **pH**: LUP Type 2 & 3 dischargers shall perform pH analysis on-site with a calibrated pH meter or pH test kit. The LUP discharger shall record pH monitoring results on paper and retain these records in accordance with Section M.4.o, below.

ii **Turbidity**: LUP Type 2 & 3 dischargers shall perform turbidity analysis using a calibrated turbidity meter (turbidimeter), either on-site or at an accredited lab. Acceptable test methods include Standard Method 2130 or USEPA Method 180.1. The results shall be recorded in the site log book in Nephelometric Turbidity Units (NTU).

iii **Suspended sediment concentration (SSC)**: LUP Type 3 dischargers exceeding their NEL, shall perform SSC analysis using ASTM Method D3977-97.

iv **Bioassessment**: LUP Type 3 dischargers shall perform bioassessment sampling and analysis according to Appendix 3 of this General Permit.

k. Watershed Monitoring Option

If an LUP Type 2 or 3 discharger is part of a qualified regional watershed-based monitoring program the LUP Type 2 or 3 discharger may be eligible for relief from the monitoring requirements in this Attachment. The Regional Water Board may approve proposals to substitute an acceptable watershed-based monitoring program if it determines that the watershed-based monitoring program will provide information to determine each discharger's compliance with the requirements of this General Permit.

l. Particle Size Analysis for Risk Justification

LUP Type 2 & 3 dischargers justifying an alternative project risk shall report a soil particle size analysis used to determine the RUSLE K-Factor. ASTM D-422 (Standard Test Method for Particle-Size Analysis of Soils), as revised, shall be used to determine the percentages of sand, very fine sand, silt, and clay on the site.

m. NAL Exceedance Report

i In the event that any effluent sample exceeds an applicable NAL, the Regional Water Boards may require LUP Type 2 & 3 dischargers to submit NAL Exceedance Reports.

ii LUP Type 2 & 3 dischargers shall certify each NAL Exceedance Report in accordance with the Special Provisions for Construction Activity.

iii LUP Type 2 & 3 dischargers shall retain an electronic or paper copy of each NAL Exceedance Report for a minimum of three years after the date the exceedance report is filed.

iv LUP Type 2 & 3 dischargers shall include in the NAL Exceedance Report:

(1) the analytical method(s), method reporting unit(s), and method detection limit(s) of each analytical parameter (analytical results that are less than the method detection limit shall be reported as "less than the method detection limit"); and
(2) the date, place, time of sampling, visual observation (inspections), and/or measurements, including precipitation.

(3) Description of the current BMPs associated with the effluent sample that exceeded the NAL and the proposed corrective actions taken.

n. NEL Violation Report

i All LUP Type 3 dischargers shall electronically submit all storm event sampling results to the State Water Board no later than 5 days after the conclusion of the storm event.

ii In the event that a LUP Type 3 discharger has violated an applicable NEL, the discharger shall submit an NEL Violation Report to the State Water Board no later than 24 hours after the NEL exceedance has been identified.

iii The LUP Type 3 discharger shall certify each NEL Violation Report in accordance with the Special Provisions for Construction Activity.

iv The LUP Type 3 discharger shall retain an electronic or paper copy of each NEL Violation Report for a minimum of three years after the date the violation report is filed.

v The LUP Type 3 discharger shall include in the NEL Violation Report:

(1) the analytical method(s), method reporting unit(s), and method detection limit(s) of each analytical parameter (analytical results that are less than the method detection limit shall be reported as "less than the method detection limit"); and
(2) the date, place, time of sampling, visual observation (inspections), and/or measurements, including precipitation.
(3) Description of the current on-site BMPs, and the proposed corrective actions taken to manage the NEL exceedance.

vi Compliance Storm Exemption:
In the event that an applicable NEL has been exceeded during a storm event equal to or larger than the Compliance Storm Event (see Section F.2.c of this Attachment), the LUP Type 3 discharger shall report the on-site rain gauge and nearby governmental rain gauge readings for verification.

o. Monitoring Records

LUP Type 2 & 3 dischargers shall ensure that records of all storm water monitoring information and copies of all reports (including Annual Reports) required by this General Permit be retained for a period of at least three years. LUP Type 2 & 3 dischargers may retain records off-

ED_002781A_00003896-00668

site and make them available upon request. These records shall include:

i The date, place, time of facility inspections, sampling, visual observation (inspections), and/or measurements, including precipitation (rain gauge);

ii The individual(s) who performed the facility inspections, sampling, visual observation (inspections), and or measurements;

iii The date and approximate time of analyses;

iv The individual(s) who performed the analyses;

v A summary of all analytical results from the last three years, the method detection limits and reporting units, the analytical techniques or methods used, and all chain of custody forms;

vi Quality assurance/quality control records and results;

vii Non-storm water discharge inspections and visual observation (inspections) and storm water discharge visual observation records (see Section M.4.a above);

viii Visual observation and sample collection exception records (see Section M.4.g above); and

ix The records of any corrective actions and follow-up activities that resulted from analytical results, visual observation (inspections), or inspections.

ATTACHMENT A.1
LUP Project Area or Project Section Area Type Determination

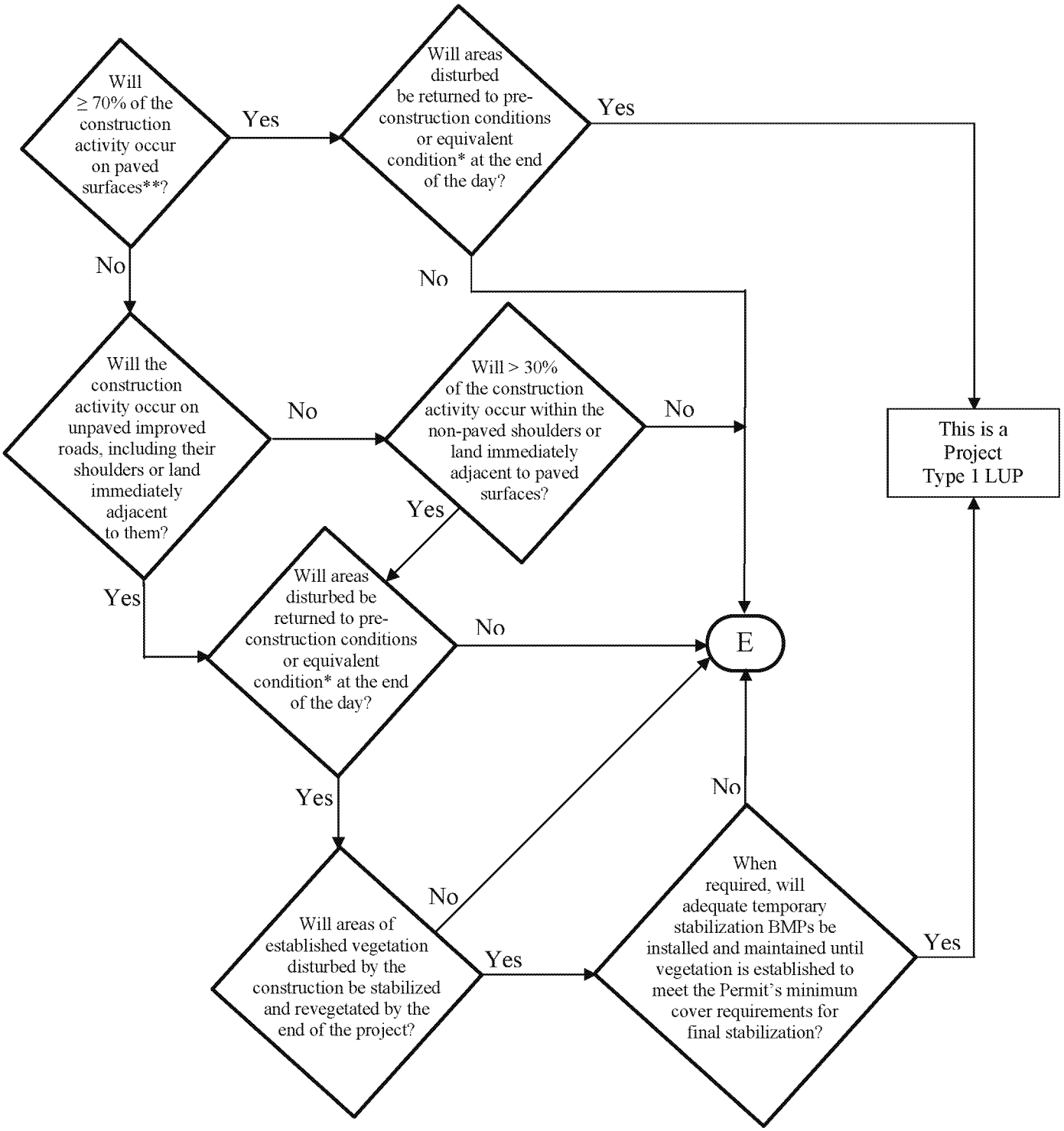

*See Definition of Terms
** Or: "Will < 30% of the soil disturbance occur on unpaved surfaces?

ATTACHMENT A.1
LUP Project Area or Project Section Area Type Determination

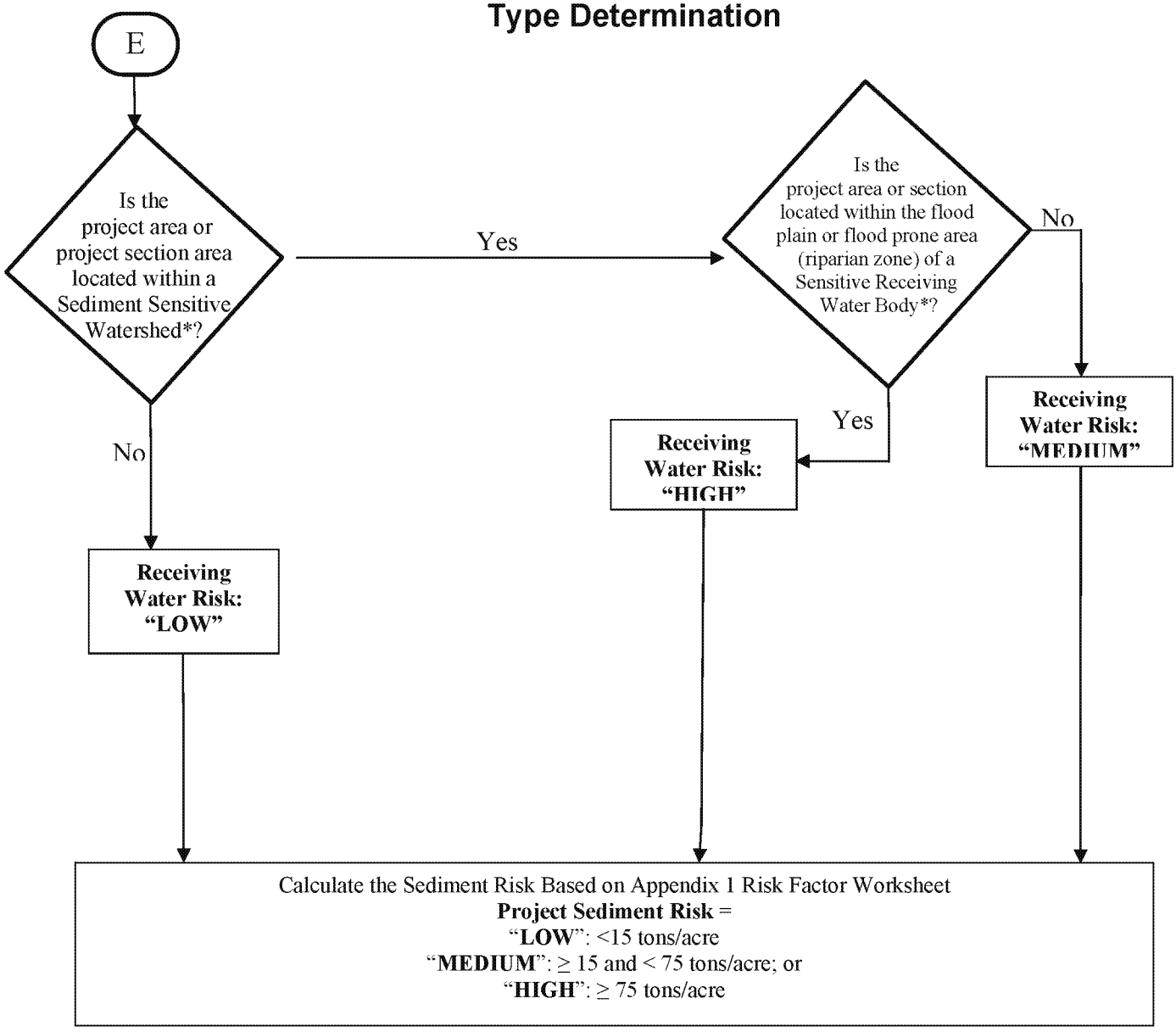

* See Definition of Terms

PROJECT SEDIMENT RISK

RECEIVING WATER RISK	LOW	MEDIUM	HIGH
LOW	Type 1	Type 1	Type 2
MEDIUM	Type 1	Type 2	Type 3
HIGH	Type 2	Type 3	Type 3

ATTACHMENT A.1
Definition of Terms

1. **Equivalent Condition** – Means disturbed soils such as those from trench excavation are required to be hauled away, backfilled into the trench, and/or covered (e.g., metal plates, pavement, plastic covers over spoil piles) at the end of the construction day.
2. **Linear Construction Activity** – Linear construction activity consists of underground/ overhead facilities that typically include, but are not limited to, any conveyance, pipe or pipeline for the transportation of any gaseous, liquid (including water, wastewater for domestic municipal services), liquescent, or slurry substance; any cable line or wire for the transmission of electrical energy; any cable line or wire for communications (e.g., telephone, telegraph, radio or television messages); and associated ancillary facilities. Construction activities associated with LUPs include, but are not limited to those activities necessary for the installation of underground and overhead linear facilities (e.g., conduits, substructures, pipelines, towers, poles, cables, wires, connectors, switching, regulating and transforming equipment and associated ancillary facilities) and include, but are not limited to, underground utility mark-out, potholing, concrete and asphalt cutting and removal, trenching, excavation, boring and drilling, access road and pole/ tower pad and cable/ wire pull station, substation construction, substructure installation, construction of tower footings and/or foundations, pole and tower installations, pipeline installations, welding, concrete and/or pavement repair or replacement, and stockpile/ borrow locations.
3. **Sediment Sensitive Receiving Water Body** – Defined as a water body segment that is listed on EPA's approved CWA 303(d) list for sedimentation/siltation, turbidity, or is designated with beneficial uses of SPAWN, MIGRATORY, and COLD.
4. **Sediment Sensitive Watershed** – Defined as a watershed draining into a receiving water body listed on EPA's approved CWA 303(d) list for sedimentation/siltation, turbidity, or a water body designated with beneficial uses of SPAWN, MIGRATORY, and COLD.

ATTACHMENT A.2
PERMIT REGISTRATION DOCUMENTS (PRDs)
GENERAL INSTRUCTIONS FOR LINEAR UNDERGROUND/OVERHEAD PROJECTS TO COMPLY WITH THE CONSTRUCTION GENERAL PERMIT

GENERAL INSTRUCTIONS

Who Must Submit

This permit is effective on July 1, 2010.

The Legally Responsible Person (LRP) for construction activities associated with linear underground/overhead project (LUP) must electronically apply for coverage under this General Permit on or after July 1, 2010. If it is determined that the LUP construction activities require an NPDES permit, the Legally Responsible Person[1] (LRP) shall submit PRDs for this General Permit in accordance with the following:

LUPs associated with Private or Municipal Development Projects

1. For LUPs associated with pre-development and pre-redevelopment construction activities:

   The LRP must obtain coverage[2] under this General Permit for its pre-development and pre-redevelopment construction activities where the total disturbed land area of these construction activities is greater than 1 acre.

2. For LUPs associated with new development and redevelopment construction projects:

   The LRP must obtain coverage under this General Permit for LUP construction activities associated with new development and redevelopment projects where the total disturbed land area of the LUP is greater than 1 acre. Coverage under this permit is not required where the same LUP construction activities are covered by another NPDES permit.

LUPs not associated with private or municipal new development or redevelopment projects:

The LRP must obtain coverage under this General Permit on or after July 1, 2010 for its LUP construction activities where the total disturbed land area is greater than 1 acre.

PRD Submittal Requirements

Prior to the start of construction activities a LRP must submit PRDs and fees to the State Water Board for each LUP.

New and Ongoing LUPs

Dischargers of new LUPs that commence construction activities after the adoption date of this General Permit shall file PRDs prior to the commencement of construction and implement the SWPPP upon the start of construction.

---

[1] person possessing the title of the land on which the construction activities will occur for the regulated site

[2] obtain coverage means filing PRDs for the project.

PERMIT REGISTRATION DOCUMENTS (PRDs)
GENERAL INSTRUCTIONS (CONTINUED)

Dischargers of ongoing LUPs that are currently covered under State Water Board Order No. 2003-0007 (Small LUP General Permit) shall electronically file Permit Registration Documents no later than July 1, 2010. After July 1, 2010, all NOIs subject to State Water Board Order No. 2003-0007-DWQ will be terminated. All existing dischargers shall be exempt from the risk determination requirements in Attachment A. All existing dischargers are therefore subject to LUP Type 1 requirements regardless of their project's sediment and receiving water risks. However, a Regional Board retains the authority to require an existing discharger to comply with the risk determination requirements in Attachment A.

Where to Apply

The Permit Registration Documents (PRDs) can be found at www.waterboards.ca.gov/water_issues/programs/stormwater/

Fees

The annual fee for storm water permits are established through the State of California Code of Regulations.

When Permit Coverage Commences

To obtain coverage under the General Permit, the LRP must include the complete PRDs and the annual fee. All PRDs deemed incomplete will be rejected with an explanation as to what is required to complete submittal. Upon receipt of complete PRDs and associated fee, each discharger will be sent a waste discharger's identification (WDID) number.

Projects and Activities Not Defined As Construction Activity

1. LUP construction activity does not include routine maintenance projects to maintain original line and grade, hydraulic capacity, or original purpose of the facility. Routine maintenance projects are projects associated with operations and maintenance activities that are conducted on existing lines and facilities and within existing right-of-way, easements, franchise agreements or other legally binding agreements of the discharger. Routine maintenance projects include, but are not limited to projects that are conducted to:

    - Maintain the original purpose of the facility, or hydraulic capacity.
    - Update existing lines[3] and facilities to comply with applicable codes, standards and regulations regardless if such projects result in increased capacity.
    - Repairing leaks.

    Routine maintenance does not include construction of new[4] lines or facilities resulting from compliance with applicable codes, standards and regulations.

[3] Update existing lines includes replacing existing lines with new materials or pipes.
[4] New lines are those that are not associated with existing facilities and are not part of a project to update or replace existing lines.

PERMIT REGISTRATION DOCUMENTS (PRDs)
GENERAL INSTRUCTIONS (CONTINUED)

Routine maintenance projects do not include those areas of maintenance projects that are outside of an existing right-of-way, franchise, easements, or agreements. When a project must acquire new areas, those areas may be subject to this General Permit based on the area of disturbed land outside the original right-of-way, easement, or agreement.

2. LUP construction activity does not include field activities associated with the planning and design of a project (e.g., activities associated with route selection).

3. Tie-ins conducted immediately adjacent to "energized" or "pressurized" facilities by the discharger are not considered small construction activities where all other LUP construction activities associated with the tie-in are covered by a NOI and SWPPP of a third party or municipal agency.

Calculating Land Disturbance Areas of LUPs

The total land area disturbed for LUPs is the sum of the:

- Surface areas of trenches, laterals and ancillary facilities, plus
- Area of the base of stockpiles on unpaved surfaces, plus
- Surface area of the borrow area, plus
- Areas of paved surfaces constructed for the project, plus
- Areas of new roads constructed or areas of major reconstruction to existing roads (e.g. improvements to two-track surfaces or road widening) for the sole purpose of accessing construction activities or as part of the final project, plus
- Equipment and material storage, staging, and preparation areas (laydown areas) not on paved surfaces, plus
- Soil areas outside the surface area of trenches, laterals and ancillary facilities that will be graded, and/or disturbed by the use of construction equipment, vehicles and machinery during construction activities.

Stockpiling Areas

Stockpiling areas, borrow areas and the removal of soils from a construction site may or may not be included when calculating the area of disturbed soil for a site depending on the following conditions:

- For stockpiling of soils onsite or immediately adjacent to a LUP site and the stockpile is not on a paved surface, the area of the base of the stockpile is to be included in the disturbed area calculation.

- The surface area of borrow areas that are onsite or immediately adjacent to a project site are to be included in the disturbed area calculation.

- For soil that is hauled offsite to a location owned or operated by the discharger that is not a paved surface, the area of the base of the stockpile is to be included in the disturbed area calculation except when the offsite location is already subject to a separate storm water permit.

PERMIT REGISTRATION DOCUMENTS (PRDs)
GENERAL INSTRUCTIONS (CONTINUED)

- For soil that is brought to the project from an off-site location owned or operated by the discharger the surface area of the borrow pit is to be included in the disturbed area calculation except when the offsite location is already subject to a separate storm water permit.

- Trench spoils on a paved surface that are either returned to the trench or excavation or hauled away from the project daily for disposal or reuse will not be included in the disturbed area calculation.

If you have any questions concerning submittal of PRDs, please call the State Water Board at (866) 563-3107.

ATTACHMENT B
PERMIT REGISTRATION DOCUMENTS (PRDs) TO COMPLY WITH THE TERMS OF THE GENERAL PERMIT TO DISCHARGE STORM WATER ASSOCIATED WITH CONSTRUCTION ACTIVITY

GENERAL INSTRUCTIONS

A. All Linear Construction Projects shall comply with the PRD requirements in Attachment A.2 of this Order.

B. Who Must Submit

Discharges of storm water associated with construction that results in the disturbance of one acre or more of land must apply for coverage under the General Construction Storm Water Permit (General Permit). Any construction activity that is a part of a larger common plan of development or sale must also be permitted, regardless of size. (For example, if 0.5 acre of a 20-acre subdivision is disturbed by the construction activities of discharger A and the remaining 19.5 acres is to be developed by discharger B, discharger A must obtain a General Storm Water Permit for the 0.5 acre project).

Other discharges from construction activities that are covered under this General Permit can be found in the General Permit Section II.B.

It is the LRP's responsibility to obtain coverage under this General Permit by electronically submitting complete PRDs (Permit Registration Documents).

In all cases, the proper procedures for submitting the PRDs must be completed before construction can commence.

C. Construction Activity Not Covered By This General Permit

Discharges from construction that are not covered under this General Permit can be found in the General Permit Sections II.A &B..

D. Annual Fees and Fee Calculation

Annual fees are calculated based upon the total area of land to be disturbed not the total size of the acreage owned. However, the calculation includes all acres to be disturbed during the duration of the project. For example, if 10 acres are scheduled to be disturbed the first year and 10 in each subsequent year for 5 years, the annual fees would be based upon 50 acres of disturbance. The State Water Board will evaluate adding acreage to an existing Permit Waste Discharge Identification (WDID) number on a case-by-case basis. In general, any acreage to be considered must be contiguous to the permitted land area and the existing

ED_002781A_00003896-00677

SWPPP must be appropriate for the construction activity and topography of the acreage under consideration. As acreage is built out and stabilized or sold, the Change of Information (COI) form enables the applicant to remove those acres from inclusion in the annual fee calculation. Checks should be made payable to: State Water Board.

The Annual fees are established through regulations adopted by the State Water Board. The total annual fee is the current base fee plus applicable surcharges for all construction sites submitting an NOI, based on the total acreage to be disturbed during the life of the project. Annual fees are subject to change by regulation.

Dischargers that apply for and satisfy the Small Construction Erosivity Wavier requirements shall pay a fee of $200.00 plus an applicable surcharge, see the General Permit Section II.B.7.

E. When to Apply

LRP's proposing to conduct construction activities subject to this General Permit must submit their PRDs prior to the commencement of construction activity.

F. Requirements for Completing Permit Registration Documents (PRDs)

All dischargers required to comply with this General Permit shall electronically submit the required PRDs for their type of construction as defined below.

G. Standard PRD Requirements (All Dischargers)

1. Notice of Intent
2. Risk Assessment (Standard or Site-Specific)
3. Site Map
4. SWPPP
5. Annual Fee
6. Certification

H. Additional PRD Requirements Related to Construction Type

1. Discharger in unincorporated areas of the State (not covered under an adopted Phase I or II SUSMP requirements) and that are not a linear project shall also submit a completed:
   a. Post-Construction Water Balance Calculator (Appendix 2).

2. Dischargers who are proposing to implement ATS shall submit:
   a. Complete ATS Plan in accordance with Attachment F at least 14 days prior to the planned operation of the ATS and a paper copy shall be available onsite during ATS operation.

b. Certification proof that design done by a professional in accordance with Attachment F.

3. Dischargers who are proposing an alternate Risk Justification:
   a. Particle Size Analysis.

I. Exceptions to Standard PRD Requirements

Construction sites with an R value less than 5 as determined in the Risk Assessment are not required to submit a SWPPP.

J. Description of PRDs

1. Notice of Intent (NOI)

2. Site Map(s) Includes:
   a. The project's surrounding area (vicinity)
   b. Site layout
   c. Construction site boundaries
   d. Drainage areas
   e. Discharge locations
   f. Sampling locations
   g. Areas of soil disturbance (temporary or permanent)
   h. Active areas of soil disturbance (cut or fill)
   i. Locations of all runoff BMPs
   j. Locations of all erosion control BMPs
   k. Locations of all sediment control BMPs
   l. ATS location (if applicable)
   m. Locations of sensitive habitats, watercourses, or other features which are not to be disturbed
   n. Locations of all post-construction BMPs
   o. Locations of storage areas for waste, vehicles, service, loading/unloading of materials, access (entrance/exits) points to construction site, fueling, and water storage, water transfer for dust control and compaction practices

3. **SWPPPs**
   A site-specific SWPPP shall be developed by each discharger and shall be submitted with the PRDs.

4. **Risk Assessment**
   All dischargers shall use the Risk Assessment procedure as describe in the General Permit Appendix 1.

   a. The Standard Risk Assessment includes utilization of the following:
      i. Receiving water Risk Assessment interactive map

ii. EPA Rainfall Erosivity Factor Calculator Website
iii. Sediment Risk interactive map
iv. Sediment sensitive water bodies list

b. The Site-Specific Risk Assessment includes the completion of the hand calculated R value Risk Calculator

5. **Post-Construction Water Balance Calculator**
All dischargers subject to this requirement shall complete the Water Balance Calculator (in Appendix 2) in accordance with the instructions.

6. **ATS Design Document and Certification**
All dischargers using ATS must submit electronically their system design (as well as any supporting documentation) and proof that the system was designed by a qualified ATS design professional (See Attachment F).

To obtain coverage under the General Permit PRDs must be included and completed. If any of the required items are missing, the PRD submittal is considered incomplete and will be rejected. Upon receipt of a complete PRD submittal, the State Water Board will process the application package in the order received and assign a (WDID) number.

Questions?

If you have any questions on completing the PRDs please email stormwater@waterboards.ca.gov or call (866) 563-3107.

ED_002781A_00003896-00680

ATTACHMENT C
RISK LEVEL 1 REQUIREMENTS

A. Effluent Standards

[These requirements are the same as those in the General Permit order.]

1. Narrative – Risk Level 1 dischargers shall comply with the narrative effluent standards listed below:

   a. Storm water discharges and authorized non-storm water discharges regulated by this General Permit shall not contain a hazardous substance equal to or in excess of reportable quantities established in 40 C.F.R. §§ 117.3 and 302.4, unless a separate NPDES Permit has been issued to regulate those discharges.

   b. Dischargers shall minimize or prevent pollutants in storm water discharges and authorized non-storm water discharges through the use of controls, structures, and management practices that achieve BAT for toxic and non-conventional pollutants and BCT for conventional pollutants.

2. Numeric – Risk Level 1 dischargers are not subject to a numeric effluent standard.

B. Good Site Management "Housekeeping"

1. Risk Level 1 dischargers shall implement good site management (i.e., "housekeeping") measures for construction materials that could potentially be a threat to water quality if discharged. At a minimum, Risk Level 1 dischargers shall implement the following good housekeeping measures:

   a. Conduct an inventory of the products used and/or expected to be used and the end products that are produced and/or expected to be produced. This does not include materials and equipment that are designed to be outdoors and exposed to environmental conditions (i.e. poles, equipment pads, cabinets, conductors, insulators, bricks, etc.).

   b. Cover and berm loose stockpiled construction materials that are not actively being used (i.e. soil, spoils, aggregate, fly-ash, stucco, hydrated lime, etc.).

c. Store chemicals in watertight containers (with appropriate secondary containment to prevent any spillage or leakage) or in a storage shed (completely enclosed).

d. Minimize exposure of construction materials to precipitation. This does not include materials and equipment that are designed to be outdoors and exposed to environmental conditions (i.e. poles, equipment pads, cabinets, conductors, insulators, bricks, etc.).

e. Implement BMPs to prevent the off-site tracking of loose construction and landscape materials.

2. Risk Level 1 dischargers shall implement good housekeeping measures for waste management, which, at a minimum, shall consist of the following:

a. Prevent disposal of any rinse or wash waters or materials on impervious or pervious site surfaces or into the storm drain system.

b. Ensure the containment of sanitation facilities (e.g., portable toilets) to prevent discharges of pollutants to the storm water drainage system or receiving water.

c. Clean or replace sanitation facilities and inspecting them regularly for leaks and spills.

d. Cover waste disposal containers at the end of every business day and during a rain event.

e. Prevent discharges from waste disposal containers to the storm water drainage system or receiving water.

f. Contain and securely protect stockpiled waste material from wind and rain at all times unless actively being used.

g. Implement procedures that effectively address hazardous and non-hazardous spills.

h. Develop a spill response and implementation element of the SWPPP prior to commencement of construction activities. The SWPPP shall require that:

i. Equipment and materials for cleanup of spills shall be available on site and that spills and leaks shall be cleaned up immediately and disposed of properly; and

ED_002781A_00003896-00682

ii. Appropriate spill response personnel are assigned and trained.

i. Ensure the containment of concrete washout areas and other washout areas that may contain additional pollutants so there is no discharge into the underlying soil and onto the surrounding areas.

3. Risk Level 1 dischargers shall implement good housekeeping for vehicle storage and maintenance, which, at a minimum, shall consist of the following:

   a. Prevent oil, grease, or fuel to leak in to the ground, storm drains or surface waters.

   b. Place all equipment or vehicles, which are to be fueled, maintained and stored in a designated area fitted with appropriate BMPs.

   c. Clean leaks immediately and disposing of leaked materials properly.

4. Risk Level 1 dischargers shall implement good housekeeping for landscape materials, which, at a minimum, shall consist of the following:

   a. Contain stockpiled materials such as mulches and topsoil when they are not actively being used.

   b. Contain fertilizers and other landscape materials when they are not actively being used.

   c. Discontinue the application of any erodible landscape material within 2 days before a forecasted rain event or during periods of precipitation.

   d. Apply erodible landscape material at quantities and application rates according to manufacture recommendations or based on written specifications by knowledgeable and experienced field personnel.

   e. Stack erodible landscape material on pallets and covering or storing such materials when not being used or applied.

5. Risk Level 1 dischargers shall conduct an assessment and create a list of potential pollutant sources and identify any areas of the site where additional BMPs are necessary to reduce or prevent pollutants in storm water discharges and authorized non-storm water discharges. This potential pollutant list shall be kept with the SWPPP and shall identify

ED_002781A_00003896-00683

all non-visible pollutants which are known, or should be known, to occur on the construction site. At a minimum, when developing BMPs, Risk Level 1 dischargers shall do the following:

a. Consider the quantity, physical characteristics (e.g., liquid, powder, solid), and locations of each potential pollutant source handled, produced, stored, recycled, or disposed of at the site.

b. Consider the degree to which pollutants associated with those materials may be exposed to and mobilized by contact with storm water.

c. Consider the direct and indirect pathways that pollutants may be exposed to storm water or authorized non-storm water discharges. This shall include an assessment of past spills or leaks, non-storm water discharges, and discharges from adjoining areas.

d. Ensure retention of sampling, visual observation, and inspection records.

e. Ensure effectiveness of existing BMPs to reduce or prevent pollutants in storm water discharges and authorized non-storm water discharges.

6. Risk Level 1 dischargers shall implement good housekeeping measures on the construction site to control the air deposition of site materials and from site operations. Such particulates can include, but are not limited to, sediment, nutrients, trash, metals, bacteria, oil and grease and organics.

C. Non-Storm Water Management

1. Risk Level 1 dischargers shall implement measures to control all non-storm water discharges during construction.

2. Risk Level 1 dischargers shall wash vehicles in such a manner as to prevent non-storm water discharges to surface waters or MS4 drainage systems.

3. Risk Level 1 dischargers shall clean streets in such a manner as to prevent unauthorized non-storm water discharges from reaching surface water or MS4 drainage systems.

D. Erosion Control

1. Risk Level 1 dischargers shall implement effective wind erosion control.

2. Risk Level 1 dischargers shall provide effective soil cover for inactive[1] areas and all finished slopes, open space, utility backfill, and completed lots.

3. Risk Level 1 dischargers shall limit the use of plastic materials when more sustainable, environmentally friendly alternatives exist. Where plastic materials are deemed necessary, the discharger shall consider the use of plastic materials resistant to solar degradation.

E. Sediment Controls

1. Risk Level 1 dischargers shall establish and maintain effective perimeter controls and stabilize all construction entrances and exits to sufficiently control erosion and sediment discharges from the site.

2. On sites where sediment basins are to be used, Risk Level 1 dischargers shall, at minimum, design sediment basins according to the method provided in CASQA's Construction BMP Guidance Handbook.

F. Run-on and Runoff Controls

Risk Level 1 dischargers shall effectively manage all run-on, all runoff within the site and all runoff that discharges off the site. Run-on from off site shall be directed away from all disturbed areas or shall collectively be in compliance with the effluent limitations in this General Permit.

G. Inspection, Maintenance and Repair

1. Risk Level 1 dischargers shall ensure that all inspection, maintenance repair and sampling activities at the project location shall be performed or supervised by a Qualified SWPPP Practitioner (QSP) representing the discharger. The QSP may delegate any or all of these activities to an employee trained to do the task(s) appropriately, but shall ensure adequate deployment.

2. Risk Level 1 dischargers shall perform weekly inspections and observations, and at least once each 24-hour period during extended

[1] Inactive areas of construction are areas of construction activity that have been disturbed and are not scheduled to be re-disturbed for at least 14 days.

ED_002781A_00003896-00685

storm events, to identify and record BMPs that need maintenance to operate effectively, that have failed, or that could fail to operate as intended. Inspectors shall be the QSP or be trained by the QSP.

3. Upon identifying failures or other shortcomings, as directed by the QSP, Risk Level 1 dischargers shall begin implementing repairs or design changes to BMPs within 72 hours of identification and complete the changes as soon as possible.

4. For each inspection required, Risk Level 1 dischargers shall complete an inspection checklist, using a form provided by the State Water Board or Regional Water Board or in an alternative format.

5. Risk Level 1 dischargers shall ensure that checklists shall remain onsite with the SWPPP and at a minimum, shall include:

   a. Inspection date and date the inspection report was written.

   b. Weather information, including presence or absence of precipitation, estimate of beginning of qualifying storm event, duration of event, time elapsed since last storm, and approximate amount of rainfall in inches.

   c. Site information, including stage of construction, activities completed, and approximate area of the site exposed.

   d. A description of any BMPs evaluated and any deficiencies noted.

   e. If the construction site is safely accessible during inclement weather, list the observations of all BMPs: erosion controls, sediment controls, chemical and waste controls, and non-storm water controls. Otherwise, list the results of visual inspections at all relevant outfalls, discharge points, downstream locations and any projected maintenance activities.

   f. Report the presence of noticeable odors or of any visible sheen on the surface of any discharges.

   g. Any corrective actions required, including any necessary changes to the SWPPP and the associated implementation dates.

   h. Photographs taken during the inspection, if any.

   i. Inspector's name, title, and signature.

H. Rain Event Action Plan

Not required for Risk Level 1 dischargers.

ED_002781A_00003896-00687

I. Risk Level 1 Monitoring and Reporting Requirements

Table 1- Summary of Monitoring Requirements

Risk Level	Visual Inspections					Sample Collection	
	Quarterly Non-storm Water Discharge	Pre-storm Event		Daily Storm BMP	Post Storm	Storm Water Discharge	Receiving Water
		Baseline	REAP				
1	X	X		X	X		

1. **Construction Site Monitoring Program Requirements**

   a. Pursuant to Water Code Sections 13383 and 13267, all dischargers subject to this General Permit shall develop and implement a written site-specific Construction Site Monitoring Program (CSMP) in accordance with the requirements of this Section. The CSMP shall include all monitoring procedures and instructions, location maps, forms, and checklists as required in this section. The CSMP shall be developed prior to the commencement of construction activities, and revised as necessary to reflect project revisions. The CSMP shall be a part of the Storm Water Pollution Prevention Plan (SWPPP), included as an appendix or separate SWPPP chapter.

   b. Existing dischargers registered under the State Water Board Order No. 99-08-DWQ shall make and implement necessary revisions to their Monitoring Programs to reflect the changes in this General Permit in a timely manner, but no later than July 1, 2010. Existing dischargers shall continue to implement their existing Monitoring Programs in compliance with State Water Board Order No. 99-08-DWQ until the necessary revisions are completed according to the schedule above.

   c. When a change of ownership occurs for all or any portion of the construction site prior to completion or final stabilization, the new discharger shall comply with these requirements as of the date the ownership change occurs.

2. **Objectives**

   The CSMP shall be developed and implemented to address the following objectives:

   a. To demonstrate that the site is in compliance with the Discharge Prohibitions;

ED_002781A_00003896-00688

b. To determine whether non-visible pollutants are present at the construction site and are causing or contributing to exceedances of water quality objectives;

c. To determine whether immediate corrective actions, additional Best Management Practice (BMP) implementation, or SWPPP revisions are necessary to reduce pollutants in storm water discharges and authorized non-storm water discharges; and

d. To determine whether BMPs included in the SWPPP are effective in preventing or reducing pollutants in storm water discharges and authorized non-storm water discharges.

3. **Risk Level 1 - Visual Monitoring (Inspection) Requirements for Qualifying Rain Events**

a. Risk Level 1 dischargers shall visually observe (inspect) storm water discharges at all discharge locations within two business days (48 hours) after each qualifying rain event.

b. Risk Level 1 dischargers shall visually observe (inspect) the discharge of stored or contained storm water that is derived from and discharged subsequent to a qualifying rain event producing precipitation of ½ inch or more at the time of discharge. Stored or contained storm water that will likely discharge after operating hours due to anticipated precipitation shall be observed prior to the discharge during operating hours.

c. Risk Level 1 dischargers shall conduct visual observations (inspections) during business hours only.

d. Risk Level 1 dischargers shall record the time, date and rain gauge reading of all qualifying rain events.

e. Within 2 business days (48 hours) prior to each qualifying rain event, Risk Level 1 dischargers shall visually observe (inspect):

i. All storm water drainage areas to identify any spills, leaks, or uncontrolled pollutant sources. If needed, the discharger shall implement appropriate corrective actions.

ii. All BMPs to identify whether they have been properly implemented in accordance with the SWPPP. If needed, the discharger shall implement appropriate corrective actions.

iii. Any storm water storage and containment areas to detect leaks and ensure maintenance of adequate freeboard.

f. For the visual observations (inspections) described in e.i and e.iii above, Risk Level 1 dischargers shall observe the presence or absence of floating and suspended materials, a sheen on the surface, discolorations, turbidity, odors, and source(s) of any observed pollutants.

g. Within two business days (48 hours) after each qualifying rain event, Risk Level 1 dischargers shall conduct post rain event visual observations (inspections) to (1) identify whether BMPs were adequately designed, implemented, and effective, and (2) identify additional BMPs and revise the SWPPP accordingly.

h. Risk Level 1 dischargers shall maintain on-site records of all visual observations (inspections), personnel performing the observations, observation dates, weather conditions, locations observed, and corrective actions taken in response to the observations.

4. **Risk Level 1 – Visual Observation Exemptions**

a. Risk Level 1 dischargers shall be prepared to conduct visual observation (inspections) until the minimum requirements of Section I.3 above are completed. Risk Level 1 dischargers are not required to conduct visual observation (inspections) under the following conditions:

i. During dangerous weather conditions such as flooding and electrical storms.

ii. Outside of scheduled site business hours.

b. If no required visual observations (inspections) are collected due to these exceptions, Risk Level 1 dischargers shall include an explanation in their SWPPP and in the Annual Report documenting why the visual observations (inspections) were not conducted.

5. **Risk Level 1 – Monitoring Methods**

Risk Level 1 dischargers shall include a description of the visual observation locations, visual observation procedures, and visual observation follow-up and tracking procedures in the CSMP.

6. **Risk Level 1 – Non-Storm Water Discharge Monitoring Requirements**

a. Visual Monitoring Requirements:

   i. Risk Level 1 dischargers shall visually observe (inspect) each drainage area for the presence of (or indications of prior) unauthorized and authorized non-storm water discharges and their sources.

   ii. Risk Level 1 dischargers shall conduct one visual observation (inspection) quarterly in each of the following periods: January-March, April-June, July-September, and October-December. Visual observation (inspections) are only required during daylight hours (sunrise to sunset).

   iii. Risk Level 1 dischargers shall ensure that visual observations (inspections) document the presence or evidence of any non-storm water discharge (authorized or unauthorized), pollutant characteristics (floating and suspended material, sheen, discoloration, turbidity, odor, etc.), and source. Risk Level 1 dischargers shall maintain on-site records indicating the personnel performing the visual observation (inspections), the dates and approximate time each drainage area and non-storm water discharge was observed, and the response taken to eliminate unauthorized non-storm water discharges and to reduce or prevent pollutants from contacting non-storm water discharges.

7. **Risk Level 1 – Non-Visible Pollutant Monitoring Requirements**

   a. Risk Level 1 dischargers shall collect one or more samples during any breach, malfunction, leakage, or spill observed during a visual inspection which could result in the discharge of pollutants to surface waters that would not be visually detectable in storm water.

   b. Risk Level 1 dischargers shall ensure that water samples are large enough to characterize the site conditions.

   c. Risk Level 1 dischargers shall collect samples at all discharge locations that can be safely accessed.

   d. Risk Level 1 dischargers shall collect samples during the first two hours of discharge from rain events that occur during business hours and which generate runoff.

   e. Risk Level 1 dischargers shall analyze samples for all non-visible pollutant parameters (if applicable) - parameters indicating the

ED_002781A_00003896-00691

presence of pollutants identified in the pollutant source assessment required (Risk Level 1 dischargers shall modify their CSMPs to address these additional parameters in accordance with any updated SWPPP pollutant source assessment).

f. Risk Level 1 dischargers shall collect a sample of storm water that has not come in contact with the disturbed soil or the materials stored or used on-site (uncontaminated sample) for comparison with the discharge sample.

g. Risk Level 1 dischargers shall compare the uncontaminated sample to the samples of discharge using field analysis or through laboratory analysis.[2]

h. Risk Level 1 dischargers shall keep all field /or analytical data in the SWPPP document.

8. **Risk Level 1 – Particle Size Analysis for Project Risk Justification**

Risk Level 1 dischargers justifying an alternative project risk shall report a soil particle size analysis used to determine the RUSLE K-Factor. ASTM D-422 (Standard Test Method for Particle-Size Analysis of Soils), as revised, shall be used to determine the percentages of sand, very fine sand, silt, and clay on the site.

9. **Risk Level 1 – Records**

Risk Level 1 dischargers shall retain records of all storm water monitoring information and copies of all reports (including Annual Reports) for a period of at least three years. Risk Level 1 dischargers shall retain all records on-site while construction is ongoing. These records include:

a. The date, place, time of facility inspections, sampling, visual observation (inspections), and/or measurements, including precipitation.

b. The individual(s) who performed the facility inspections, sampling, visual observation (inspections), and or measurements.

c. The date and approximate time of analyses.

d. The individual(s) who performed the analyses.

[2] For laboratory analysis, all sampling, sample preservation, and analyses must be conducted according to test procedures under 40 CFR Part 136. Field discharge samples shall be collected and analyzed according to the specifications of the manufacturer of the sampling devices employed.

ED_002781A_00003896-00692

e. A summary of all analytical results from the last three years, the method detection limits and reporting units, and the analytical techniques or methods used.

f. Rain gauge readings from site inspections.

g. Quality assurance/quality control records and results.

h. Non-storm water discharge inspections and visual observation (inspections) and storm water discharge visual observation records (see Sections I.3 and I.6 above).

i. Visual observation and sample collection exception records (see Section I.4 above).

j. The records of any corrective actions and follow-up activities that resulted from analytical results, visual observation (inspections), or inspections.

ATTACHMENT D
RISK LEVEL 2 REQUIREMENTS

A. Effluent Standards

[These requirements are the same as those in the General Permit order.]

1. Narrative – Risk Level 2 dischargers shall comply with the narrative effluent standards listed below:

   a. Storm water discharges and authorized non-storm water discharges regulated by this General Permit shall not contain a hazardous substance equal to or in excess of reportable quantities established in 40 C.F.R. §§ 117.3 and 302.4, unless a separate NPDES Permit has been issued to regulate those discharges.

   b. Dischargers shall minimize or prevent pollutants in storm water discharges and authorized non-storm water discharges through the use of controls, structures, and management practices that achieve BAT for toxic and non-conventional pollutants and BCT for conventional pollutants.

2. Numeric – Risk level 2 dischargers are subject to a pH NAL of 6.5-8.5, and a turbidity NAL of 250 NTU.

B. Good Site Management "Housekeeping"

1. Risk Level 2 dischargers shall implement good site management (i.e., "housekeeping") measures for construction materials that could potentially be a threat to water quality if discharged. At a minimum, Risk Level 2 dischargers shall implement the following good housekeeping measures:

   a. Conduct an inventory of the products used and/or expected to be used and the end products that are produced and/or expected to be produced. This does not include materials and equipment that are designed to be outdoors and exposed to environmental conditions (i.e. poles, equipment pads, cabinets, conductors, insulators, bricks, etc.).

   b. Cover and berm loose stockpiled construction materials that are not actively being used (i.e. soil, spoils, aggregate, fly-ash, stucco, hydrated lime, etc.).

c. Store chemicals in watertight containers (with appropriate secondary containment to prevent any spillage or leakage) or in a storage shed (completely enclosed).

d. Minimize exposure of construction materials to precipitation. This does not include materials and equipment that are designed to be outdoors and exposed to environmental conditions (i.e. poles, equipment pads, cabinets, conductors, insulators, bricks, etc.).

e. Implement BMPs to prevent the off-site tracking of loose construction and landscape materials.

2. Risk Level 2 dischargers shall implement good housekeeping measures for waste management, which, at a minimum, shall consist of the following:

a. Prevent disposal of any rinse or wash waters or materials on impervious or pervious site surfaces or into the storm drain system.

b. Ensure the containment of sanitation facilities (e.g., portable toilets) to prevent discharges of pollutants to the storm water drainage system or receiving water.

c. Clean or replace sanitation facilities and inspecting them regularly for leaks and spills.

d. Cover waste disposal containers at the end of every business day and during a rain event.

e. Prevent discharges from waste disposal containers to the storm water drainage system or receiving water.

f. Contain and securely protect stockpiled waste material from wind and rain at all times unless actively being used.

g. Implement procedures that effectively address hazardous and non-hazardous spills.

h. Develop a spill response and implementation element of the SWPPP prior to commencement of construction activities. The SWPPP shall require:

i. Equipment and materials for cleanup of spills shall be available on site and that spills and leaks shall be cleaned up immediately and disposed of properly.

ii. Appropriate spill response personnel are assigned and trained.

i. Ensure the containment of concrete washout areas and other washout areas that may contain additional pollutants so there is no discharge into the underlying soil and onto the surrounding areas.

3. Risk Level 2 dischargers shall implement good housekeeping for vehicle storage and maintenance, which, at a minimum, shall consist of the following:

   a. Prevent oil, grease, or fuel to leak in to the ground, storm drains or surface waters.

   b. Place all equipment or vehicles, which are to be fueled, maintained and stored in a designated area fitted with appropriate BMPs.

   c. Clean leaks immediately and disposing of leaked materials properly.

4. Risk Level 2 dischargers shall implement good housekeeping for landscape materials, which, at a minimum, shall consist of the following:

   a. Contain stockpiled materials such as mulches and topsoil when they are not actively being used.

   b. Contain all fertilizers and other landscape materials when they are not actively being used.

   c. Discontinue the application of any erodible landscape material within 2 days before a forecasted rain event or during periods of precipitation.

   d. Apply erodible landscape material at quantities and application rates according to manufacture recommendations or based on written specifications by knowledgeable and experienced field personnel.

   e. Stack erodible landscape material on pallets and covering or storing such materials when not being used or applied.

5. Risk Level 2 dischargers shall conduct an assessment and create a list of potential pollutant sources and identify any areas of the site where additional BMPs are necessary to reduce or prevent pollutants in storm water discharges and authorized non-storm water discharges. This potential pollutant list shall be kept with the SWPPP and shall identify

ED_002781A_00003896-00696

all non-visible pollutants which are known, or should be known, to occur on the construction site. At a minimum, when developing BMPs, Risk Level 2 dischargers shall do the following:

a. Consider the quantity, physical characteristics (e.g., liquid, powder, solid), and locations of each potential pollutant source handled, produced, stored, recycled, or disposed of at the site.

b. Consider the degree to which pollutants associated with those materials may be exposed to and mobilized by contact with storm water.

c. Consider the direct and indirect pathways that pollutants may be exposed to storm water or authorized non-storm water discharges. This shall include an assessment of past spills or leaks, non-storm water discharges, and discharges from adjoining areas.

d. Ensure retention of sampling, visual observation, and inspection records.

e. Ensure effectiveness of existing BMPs to reduce or prevent pollutants in storm water discharges and authorized non-storm water discharges.

6. Risk Level 2 dischargers shall implement good housekeeping measures on the construction site to control the air deposition of site materials and from site operations. Such particulates can include, but are not limited to, sediment, nutrients, trash, metals, bacteria, oil and grease and organics.

7. **Additional Risk Level 2 Requirement:** Risk Level 2 dischargers shall document all housekeeping BMPs in the SWPPP and REAP(s) in accordance with the nature and phase of the construction project. Construction phases at traditional land development projects include Grading and Land Development Phase, Streets and Utilities, or Vertical Construction for traditional land development projects.

C. Non-Storm Water Management

1. Risk Level 2 dischargers shall implement measures to control all non-storm water discharges during construction.

2. Risk Level 2 dischargers shall wash vehicles in such a manner as to prevent non-storm water discharges to surface waters or MS4 drainage systems.

3. Risk Level 2 dischargers shall clean streets in such a manner as to prevent unauthorized non-storm water discharges from reaching surface water or MS4 drainage systems.

D. Erosion Control

1. Risk Level 2 dischargers shall implement effective wind erosion control.

2. Risk Level 2 dischargers shall provide effective soil cover for inactive[1] areas and all finished slopes, open space, utility backfill, and completed lots.

3. Risk Level 2 dischargers shall limit the use of plastic materials when more sustainable, environmentally friendly alternatives exist. Where plastic materials are deemed necessary, the discharger shall consider the use of plastic materials resistant to solar degradation.

E. Sediment Controls

1. Risk Level 2 dischargers shall establish and maintain effective perimeter controls and stabilize all construction entrances and exits to sufficiently control erosion and sediment discharges from the site.

2. On sites where sediment basins are to be used, Risk Level 2 dischargers shall, at minimum, design sediment basins according to the method provided in CASQA's Construction BMP Guidance Handbook.

3. **Additional Risk Level 2 Requirement:** Risk Level 2 dischargers shall implement appropriate erosion control BMPs (runoff control and soil stabilization) in conjunction with sediment control BMPs for areas under active[2] construction.

4. **Additional Risk Level 2 Requirement:** Risk Level 2 dischargers shall apply linear sediment controls along the toe of the slope, face of the slope, and at the grade breaks of exposed slopes to comply with sheet flow lengths[3] in accordance with Table 1.

---

[1] Inactive areas of construction are areas of construction activity that have been disturbed and are not scheduled to be re-disturbed for at least 14 days.
[2] Active areas of construction are areas undergoing land surface disturbance. This includes construction activity during the preliminary stage, mass grading stage, streets and utilities stage and the vertical construction stage.
[3] Sheet flow length is the length that shallow, low velocity flow travels across a site.

Table 1 - Critical Slope/Sheet Flow Length Combinations

Slope Percentage	Sheet flow length not to exceed
0-25%	20 feet
25-50%	15 feet
Over 50%	10 feet

5. **Additional Risk Level 2 Requirement:** Risk Level 2 dischargers shall ensure that construction activity traffic to and from the project is limited to entrances and exits that employ effective controls to prevent offsite tracking of sediment.

6. **Additional Risk Level 2 Requirement:** Risk Level 2 dischargers shall ensure that all storm drain inlets and perimeter controls, runoff control BMPs, and pollutant controls at entrances and exits (e.g. tire washoff locations) are maintained and protected from activities that reduce their effectiveness.

7. **Additional Risk Level 2 Requirement:** Risk Level 2 dischargers shall inspect on a daily basis all immediate access roads daily. At a minimum daily (when necessary) and prior to any rain event, the discharger shall remove any sediment or other construction activity-related materials that are deposited on the roads (by vacuuming or sweeping).

F. Run-on and Run-off Controls

Risk Level 2 dischargers shall effectively manage all run-on, all runoff within the site and all runoff that discharges off the site. Run-on from off site shall be directed away from all disturbed areas or shall collectively be in compliance with the effluent limitations in this General Permit.

G. Inspection, Maintenance and Repair

1. Risk Level 2 dischargers shall ensure that all inspection, maintenance repair and sampling activities at the project location shall be performed or supervised by a Qualified SWPPP Practitioner (QSP) representing the discharger. The QSP may delegate any or all of these activities to an employee appropriately trained to do the task(s).

2. Risk Level 2 dischargers shall perform weekly inspections and observations, and at least once each 24-hour period during extended storm events, to identify and record BMPs that need maintenance to operate effectively, that have failed, or that could fail to operate as intended. Inspectors shall be the QSP or be trained by the QSP.

3. Upon identifying failures or other shortcomings, as directed by the QSP, Risk Level 2 dischargers shall begin implementing repairs or design changes to BMPs within 72 hours of identification and complete the changes as soon as possible.

4. For each inspection required, Risk Level 2 dischargers shall complete an inspection checklist, using a form provided by the State Water Board or Regional Water Board or in an alternative format.

5. Risk Level 2 dischargers shall ensure that checklists shall remain onsite with the SWPPP and at a minimum, shall include:

   a. Inspection date and date the inspection report was written.

   b. Weather information, including presence or absence of precipitation, estimate of beginning of qualifying storm event, duration of event, time elapsed since last storm, and approximate amount of rainfall in inches.

   c. Site information, including stage of construction, activities completed, and approximate area of the site exposed.

   d. A description of any BMPs evaluated and any deficiencies noted.

   e. If the construction site is safely accessible during inclement weather, list the observations of all BMPs: erosion controls, sediment controls, chemical and waste controls, and non-storm water controls. Otherwise, list the results of visual inspections at all relevant outfalls, discharge points, downstream locations and any projected maintenance activities.

   f. Report the presence of noticeable odors or of any visible sheen on the surface of any discharges.

   g. Any corrective actions required, including any necessary changes to the SWPPP and the associated implementation dates.

   h. Photographs taken during the inspection, if any.

   i. Inspector's name, title, and signature.

H. Rain Event Action Plan

1. **Additional Risk Level 2 Requirement:** The discharger shall ensure a QSP develop a Rain Event Action Plan (REAP) 48 hours prior to any

ED_002781A_00003896-00700

likely precipitation event. A likely precipitation event is any weather pattern that is forecast to have a 50% or greater probability of producing precipitation in the project area. The discharger shall ensure a QSP obtain a printed copy of precipitation forecast information from the National Weather Service Forecast Office (e.g., by entering the zip code of the project's location at http://www.srh.noaa.gov/forecast).

2. **Additional Risk Level 2 Requirement:** The discharger shall ensure a QSP develop the REAPs for all phases of construction (i.e., Grading and Land Development, Streets and Utilities, Vertical Construction, Final Landscaping and Site Stabilization).

3. **Additional Risk Level 2 Requirement:** The discharger shall ensure a QSP ensure that the REAP include, at a minimum, the following site information:

   a. Site Address
   b. Calculated Risk Level (2 or 3)
   c. Site Storm Water Manager Information including the name, company, and 24-hour emergency telephone number
   d. Erosion and Sediment Control Provider information including the name, company, and 24-hour emergency telephone number
   e. Storm Water Sampling Agent information including the name, company, and 24-hour emergency telephone number

4. **Additional Risk Level 2 Requirement:** The discharger shall ensure a QSP include in the REAP, at a minimum, the following project phase information:

   a. Activities associated with each construction phase
   b. Trades active on the construction site during each construction phase
   c. Trade contractor information
   d. Suggested actions for each project phase

5. **Additional Risk Level 2 Requirement:** The discharger shall ensure a QSP develop additional REAPs for project sites where construction activities are indefinitely halted or postponed (Inactive Construction). At a minimum, Inactive Construction REAPs must include:

   a. Site Address
   b. Calculated Risk Level (2 or 3)
   c. Site Storm Water Manager Information including the name, company, and 24-hour emergency telephone number

ED_002781A_00003896-00701

d. Erosion and Sediment Control Provider information including the name, company, and 24-hour emergency telephone number
e. Storm Water Sampling Agent information including the name, company, and 24-hour emergency telephone number
f. Trades active on site during Inactive Construction
g. Trade contractor information
h. Suggested actions for inactive construction sites

6. **Additional Risk Level 2 Requirement:** The discharger shall ensure a QSP begin implementation and make the REAP available onsite no later than 24 hours prior to the likely precipitation event.

7. **Additional Risk Level 2 Requirement:** The discharger shall ensure a QSP maintain onsite a paper copy of each REAP onsite in compliance with the record retention requirements of the Special Provisions in this General Permit.

ED_002781A_00003896-00702

I. Risk Level 2 Monitoring and Reporting Requirements

Table 2- Summary of Monitoring Requirements

Risk Level	Visual Inspections					Sample Collection	
	Quarterly Non-storm Water Discharge	Pre-storm Event		Daily Storm BMP	Post Storm	Storm Water Discharge	Receiving Water
		Baseline	REAP				
2	X	X	X	X	X	X	

1. Construction Site Monitoring Program Requirements

   a. Pursuant to Water Code Sections 13383 and 13267, all dischargers subject to this General Permit shall develop and implement a written site-specific Construction Site Monitoring Program (CSMP) in accordance with the requirements of this Section. The CSMP shall include all monitoring procedures and instructions, location maps, forms, and checklists as required in this section. The CSMP shall be developed prior to the commencement of construction activities, and revised as necessary to reflect project revisions. The CSMP shall be a part of the Storm Water Pollution Prevention Plan (SWPPP), included as an appendix or separate SWPPP chapter.

   b. Existing dischargers registered under the State Water Board Order No. 99-08-DWQ shall make and implement necessary revisions to their Monitoring Program to reflect the changes in this General Permit in a timely manner, but no later than July 1, 2010. Existing dischargers shall continue to implement their existing Monitoring Programs in compliance with State Water Board Order No. 99-08-DWQ until the necessary revisions are completed according to the schedule above.

   c. When a change of ownership occurs for all or any portion of the construction site prior to completion or final stabilization, the new discharger shall comply with these requirements as of the date the ownership change occurs.

2. **Objectives**

   The CSMP shall be developed and implemented to address the following objectives:

a. To demonstrate that the site is in compliance with the Discharge Prohibitions and applicable Numeric Action Levels (NALs)/Numeric Effluent Limitations (NELs) of this General Permit.

b. To determine whether non-visible pollutants are present at the construction site and are causing or contributing to exceedances of water quality objectives.

c. To determine whether immediate corrective actions, additional Best Management Practice (BMP) implementation, or SWPPP revisions are necessary to reduce pollutants in storm water discharges and authorized non-storm water discharges.

d. To determine whether BMPs included in the SWPPP/Rain Event Action Plan (REAP) are effective in preventing or reducing pollutants in storm water discharges and authorized non-storm water discharges.

3. **Risk Level 2 – Visual Monitoring (Inspection) Requirements for Qualifying Rain Events**

a. Risk Level 2 dischargers shall visually observe (inspect) storm water discharges at all discharge locations within two business days (48 hours) after each qualifying rain event.

b. Risk Level 2 dischargers shall visually observe (inspect) the discharge of stored or contained storm water that is derived from and discharged subsequent to a qualifying rain event producing precipitation of ½ inch or more at the time of discharge. Stored or contained storm water that will likely discharge after operating hours due to anticipated precipitation shall be observed prior to the discharge during operating hours.

c. Risk Level 2 dischargers shall conduct visual observations (inspections) during business hours only.

d. Risk Level 2 dischargers shall record the time, date and rain gauge reading of all qualifying rain events.

e. Within 2 business days (48 hours) prior to each qualifying rain event, Risk Level 2 dischargers shall visually observe (inspect):

i. all storm water drainage areas to identify any spills, leaks, or uncontrolled pollutant sources. If needed, the discharger shall implement appropriate corrective actions.

ii. all BMPs to identify whether they have been properly implemented in accordance with the SWPPP/REAP. If needed, the discharger shall implement appropriate corrective actions.

iii. any storm water storage and containment areas to detect leaks and ensure maintenance of adequate freeboard.

f. For the visual observations (inspections) described in c.i and c.iii above, Risk Level 2 dischargers shall observe the presence or absence of floating and suspended materials, a sheen on the surface, discolorations, turbidity, odors, and source(s) of any observed pollutants.

g. Within two business days (48 hours) after each qualifying rain event, Risk Level 2 dischargers shall conduct post rain event visual observations (inspections) to (1) identify whether BMPs were adequately designed, implemented, and effective, and (2) identify additional BMPs and revise the SWPPP accordingly.

h. Risk Level 2 dischargers shall maintain on-site records of all visual observations (inspections), personnel performing the observations, observation dates, weather conditions, locations observed, and corrective actions taken in response to the observations.

4. **Risk Level 2 – Water Quality Sampling and Analysis**

a. Risk Level 2 dischargers shall collect storm water grab samples from sampling locations, as defined in Section I.5. The storm water grab sample(s) obtained shall be representative of the flow and characteristics of the discharge.

b. At minimum, Risk Level 2 dischargers shall collect 3 samples per day of the qualifying event.

c. Risk Level 2 dischargers shall ensure that the grab samples collected of stored or contained storm water are from discharges subsequent to a qualifying rain event (producing precipitation of ½ inch or more at the time of discharge).

<u>Storm Water Effluent Monitoring Requirements</u>

d. Risk Level 2 dischargers shall analyze their effluent samples for:

i. pH and turbidity.

ii. Any additional parameters for which monitoring is required by the Regional Water Board.

5. **Risk Level 2 – Storm Water Discharge Water Quality Sampling Locations**

Effluent Sampling Locations

a. Risk Level 2 dischargers shall perform sampling and analysis of storm water discharges to characterize discharges associated with construction activity from the entire project disturbed area.

b. Risk Level 2 dischargers shall collect effluent samples at all discharge points where storm water is discharged off-site.

c. Risk Level 2 dischargers shall ensure that storm water discharge collected and observed represent[4] the effluent in each drainage area based on visual observation of the water and upstream conditions.

d. Risk Level 2 dischargers shall monitor and report site run-on from surrounding areas if there is reason to believe run-on may contribute to an exceedance of NALs or NELs.

e. Risk Level 2 dischargers who deploy an ATS on their site, or a portion on their site, shall collect ATS effluent samples and measurements from the discharge pipe or another location representative of the nature of the discharge.

f. Risk Level 2 dischargers shall select analytical test methods from the list provided in Table 3 below.

g. All storm water sample collection preservation and handling shall be conducted in accordance with Section I.7 "Storm Water Sample Collection and Handling Instructions" below.

6. **Risk Level 2 – Visual Observation and Sample Collection Exemptions**

a. Risk Level 2 dischargers shall be prepared to collect samples and conduct visual observation (inspections) until the minimum requirements of Sections I.3 and I.4 above are completed. Risk

[4] For example, if there has been concrete work recently in an area, or drywall scrap is exposed to the rain, a pH sample shall be taken of drainage from the relevant work area. Similarly, if sediment laden water is flowing through some parts of a silt fence, samples shall be taken of the sediment-laden water even if most water flowing through the fence is clear.

ED_002781A_00003896-00706

Level 2 dischargers are not required to physically collect samples or conduct visual observation (inspections) under the following conditions:

i. During dangerous weather conditions such as flooding and electrical storms.

ii. Outside of scheduled site business hours.

b. If no required samples or visual observation (inspections) are collected due to these exceptions, Risk Level 2 dischargers shall include an explanation in their SWPPP and in the Annual Report documenting why the sampling or visual observation (inspections) were not conducted.

7. **Risk Level 2 – Storm Water Sample Collection and Handling Instructions**

a. Risk Level 2 dischargers shall refer to Table 3 below for test methods, detection limits, and reporting units.

b. Risk Level 2 dischargers shall ensure that testing laboratories will receive samples within 48 hours of the physical sampling (unless otherwise required by the laboratory), and shall use only the sample containers provided by the laboratory to collect and store samples.

c. Risk Level 2 dischargers shall designate and train personnel to collect, maintain, and ship samples in accordance with the Surface Water Ambient Monitoring Program's (SWAMP) 2008 Quality Assurance Program Plan (QAPrP).[5]

8. **Risk Level 2 – Monitoring Methods**

a. Risk Level 2 dischargers shall include a description of the following items in the CSMP:

i. Visual observation locations, visual observation procedures, and visual observation follow-up and tracking procedures.

ii. Sampling locations, and sample collection and handling procedures. This shall include detailed procedures for sample

[5] Additional information regarding SWAMP's QAPrP and QAMP can be found at http://www.waterboards.ca.gov/water_issues/programs/swamp/.
QAPrP: http://www.waterboards.ca.gov/water_issues/programs/swamp/docs/qapp/swamp_qapp_master090108a.pdf.
QAMP: http://www.waterboards.ca.gov/water_issues/programs/swamp/qamp.shtml.

ED_002781A_00003896-00707

collection, storage, preservation, and shipping to the testing lab to assure that consistent quality control and quality assurance is maintained. Dischargers shall attach to the monitoring program an example Chain of Custody form used when handling and shipping samples.

iii. Identification of the analytical methods and related method detection limits (if applicable) for each parameter required in Section I.4 above.

b. Risk Level 2 dischargers shall ensure that all sampling and sample preservation are in accordance with the current edition of "Standard Methods for the Examination of Water and Wastewater" (American Public Health Association). All monitoring instruments and equipment (including a discharger's own field instruments for measuring pH and turbidity) should be calibrated and maintained in accordance with manufacturers' specifications to ensure accurate measurements. Risk Level 2 dischargers shall ensure that all laboratory analyses are conducted according to test procedures under 40 CFR Part 136, unless other test procedures have been specified in this General Permit or by the Regional Water Board. With the exception of field analysis conducted by the discharger for turbidity and pH, all analyses should be sent to and conducted at a laboratory certified for such analyses by the State Department of Health Services. Risk Level 2 dischargers shall conduct their own field analysis of pH and may conduct their own field analysis of turbidity if the discharger has sufficient capability (qualified and trained employees, properly calibrated and maintained field instruments, etc.) to adequately perform the field analysis.

9. **Risk Level 2 – Analytical Methods**

a. Risk Level 2 dischargers shall refer to Table 3 below for test methods, detection limits, and reporting units.

b. **pH**: Risk Level 2 dischargers shall perform pH analysis on-site with a calibrated pH meter or a pH test kit. Risk Level 2 dischargers shall record pH monitoring results on paper and retain these records in accordance with Section I.14, below.

c. **Turbidity**: Risk Level 2 dischargers shall perform turbidity analysis using a calibrated turbidity meter (turbidimeter), either on-site or at an accredited lab. Acceptable test methods include Standard Method 2130 or USEPA Method 180.1. The results will be recorded in the site log book in Nephelometric Turbidity Units (NTU).

10. **Risk Level 2 - Non-Storm Water Discharge Monitoring Requirements**

    a. Visual Monitoring Requirements:

        i. Risk Level 2 dischargers shall visually observe (inspect) each drainage area for the presence of (or indications of prior) unauthorized and authorized non-storm water discharges and their sources.

        ii. Risk Level 2 dischargers shall conduct one visual observation (inspection) quarterly in each of the following periods: January-March, April-June, July-September, and October-December. Visual observation (inspections) are only required during daylight hours (sunrise to sunset).

        iii. Risk Level 2 dischargers shall ensure that visual observations (inspections) document the presence or evidence of any non-storm water discharge (authorized or unauthorized), pollutant characteristics (floating and suspended material, sheen, discoloration, turbidity, odor, etc.), and source. Risk Level 2 dischargers shall maintain on-site records indicating the personnel performing the visual observation (inspections), the dates and approximate time each drainage area and non-storm water discharge was observed, and the response taken to eliminate unauthorized non-storm water discharges and to reduce or prevent pollutants from contacting non-storm water discharges.

    b. Effluent Sampling Locations:

        i. Risk Level 2 dischargers shall sample effluent at all discharge points where non-storm water and/or authorized non-storm water is discharged off-site.

        ii. Risk Level 2 dischargers shall send all non-storm water sample analyses to a laboratory certified for such analyses by the State Department of Health Services.

        iii. Risk Level 2 dischargers shall monitor and report run-on from surrounding areas if there is reason to believe run-on may contribute to an exceedance of NALs.

11. **Risk Level 2 – Non-Visible Pollutant Monitoring Requirements**

ED_002781A_00003896-00709

a. Risk Level 2 dischargers shall collect one or more samples during any breach, malfunction, leakage, or spill observed during a visual inspection which could result in the discharge of pollutants to surface waters that would not be visually detectable in storm water.

b. Risk Level 2 dischargers shall ensure that water samples are large enough to characterize the site conditions.

c. Risk Level 2 dischargers shall collect samples at all discharge locations that can be safely accessed.

d. Risk Level 2 dischargers shall collect samples during the first two hours of discharge from rain events that occur during business hours and which generate runoff.

e. Risk Level 2 dischargers shall analyze samples for all non-visible pollutant parameters (if applicable) - parameters indicating the presence of pollutants identified in the pollutant source assessment required (Risk Level 2 dischargers shall modify their CSMPs to address these additional parameters in accordance with any updated SWPPP pollutant source assessment).

f. Risk Level 2 dischargers shall collect a sample of storm water that has not come in contact with the disturbed soil or the materials stored or used on-site (uncontaminated sample) for comparison with the discharge sample.

g. Risk Level 2 dischargers shall compare the uncontaminated sample to the samples of discharge using field analysis or through laboratory analysis.[6]

h. Risk Level 2 dischargers shall keep all field /or analytical data in the SWPPP document.

12. **Risk Level 2 – Watershed Monitoring Option**

Risk Level 2 dischargers who are part of a qualified regional watershed-based monitoring program may be eligible for relief from the requirements in Sections I.5. The Regional Water Board may approve proposals to substitute an acceptable watershed-based monitoring program by determining if the watershed-based monitoring program

[6] For laboratory analysis, all sampling, sample preservation, and analyses must be conducted according to test procedures under 40 CFR Part 136. Field discharge samples shall be collected and analyzed according to the specifications of the manufacturer of the sampling devices employed.

ED_002781A_00003896-00710

will provide substantially similar monitoring information in evaluating discharger compliance with the requirements of this General Permit.

13. **Risk Level 2 – Particle Size Analysis for Project Risk Justification**

    Risk Level 2 dischargers justifying an alternative project risk shall report a soil particle size analysis used to determine the RUSLE K-Factor. ASTM D-422 (Standard Test Method for Particle-Size Analysis of Soils), as revised, shall be used to determine the percentages of sand, very fine sand, silt, and clay on the site.

14. **Risk Level 2 – Records**

    Risk Level 2 dischargers shall retain records of all storm water monitoring information and copies of all reports (including Annual Reports) for a period of at least three years. Risk Level 2 dischargers shall retain all records on-site while construction is ongoing. These records include:

    a. The date, place, time of facility inspections, sampling, visual observation (inspections), and/or measurements, including precipitation.

    b. The individual(s) who performed the facility inspections, sampling, visual observation (inspections), and or measurements.

    c. The date and approximate time of analyses.

    d. The individual(s) who performed the analyses.

    e. A summary of all analytical results from the last three years, the method detection limits and reporting units, the analytical techniques or methods used, and the chain of custody forms.

    f. Rain gauge readings from site inspections;

    g. Quality assurance/quality control records and results.

    h. Non-storm water discharge inspections and visual observation (inspections) and storm water discharge visual observation records (see Sections I.3 and I.10 above).

    i. Visual observation and sample collection exception records (see Section I.6 above).

j. The records of any corrective actions and follow-up activities that resulted from analytical results, visual observation (inspections), or inspections.

15. **Risk Level 2 – NAL Exceedance Report**

a. In the event that any effluent sample exceeds an applicable NAL, Risk Level 2 dischargers shall electronically submit all storm event sampling results to the State Water Board no later than 10 days after the conclusion of the storm event. The Regional Boards have the authority to require the submittal of an NAL Exceedance Report.

b. Risk Level 2 dischargers shall certify each NAL Exceedance Report in accordance with the Special Provisions for Construction Activity.

c. Risk Level 2 dischargers shall retain an electronic or paper copy of each NAL Exceedance Report for a minimum of three years after the date the annual report is filed.

d. Risk Level 2 dischargers shall include in the NAL Exceedance Report:

i. The analytical method(s), method reporting unit(s), and method detection limit(s) of each analytical parameter (analytical results that are less than the method detection limit shall be reported as "less than the method detection limit").

ii. The date, place, time of sampling, visual observation (inspections), and/or measurements, including precipitation.

iii. A description of the current BMPs associated with the effluent sample that exceeded the NAL and the proposed corrective actions taken.

Table 3 – Risk Level 2 Test Methods, Detection Limits, Reporting Units and Applicable NALs/NELs

Parameter	Test Method / Protocol	Discharge Type	Min. Detection Limit	Reporting Units	Numeric Action Level
pH	Field test with calibrated portable instrument	Risk Level 2 Discharges	0.2	pH units	lower NAL = 6.5 upper NAL = 8.5
Turbidity	EPA 0180.1 and/or field test with calibrated portable instrument	Risk Level 2 Discharges other than ATS	1	NTU	250 NTU
		For ATS discharges	1	NTU	N/A

ED_002781A_00003896-00713

ATTACHMENT E
RISK LEVEL 3 REQUIREMENTS

A. Effluent Standards

[These requirements are the same as those in the General Permit order.]

1. Narrative – Risk Level 3 dischargers shall comply with the narrative effluent standards listed below:

   a. Storm water discharges and authorized non-storm water discharges regulated by this General Permit shall not contain a hazardous substance equal to or in excess of reportable quantities established in 40 C.F.R. §§ 117.3 and 302.4, unless a separate NPDES Permit has been issued to regulate those discharges.

   b. Dischargers shall minimize or prevent pollutants in storm water discharges and authorized non-storm water discharges through the use of controls, structures, and management practices that achieve BAT for toxic and non-conventional pollutants and BCT for conventional pollutants.

2. Numeric –Risk Level 3 dischargers are subject to a pH NAL of 6.5-8.5, and a turbidity NAL of 250 NTU. In addition, Risk Level 3 dischargers are subject to a pH NEL of 6.0-9.0 and a turbidity NEL of 500 NTU.

B. Good Site Management "Housekeeping"

1. Risk Level 3 dischargers shall implement good site management (i.e., "housekeeping") measures for construction materials that could potentially be a threat to water quality if discharged. At a minimum, Risk Level 3 dischargers shall implement the following good housekeeping measures:

   a. Conduct an inventory of the products used and/or expected to be used and the end products that are produced and/or expected to be produced. This does not include materials and equipment that are designed to be outdoors and exposed to environmental conditions (i.e. poles, equipment pads, cabinets, conductors, insulators, bricks, etc.).

   b. Cover and berm loose stockpiled construction materials that are not actively being used (i.e. soil, spoils, aggregate, fly-ash, stucco, hydrated lime, etc.).

c. Store chemicals in watertight containers (with appropriate secondary containment to prevent any spillage or leakage) or in a storage shed (completely enclosed).

d. Minimize exposure of construction materials to precipitation. This does not include materials and equipment that are designed to be outdoors and exposed to environmental conditions (i.e. poles, equipment pads, cabinets, conductors, insulators, bricks, etc.).

e. Implement BMPs to prevent the off-site tracking of loose construction and landscape materials.

2. Risk Level 3 dischargers shall implement good housekeeping measures for waste management, which, at a minimum, shall consist of the following:

a. Prevent disposal of any rinse or wash waters or materials on impervious or pervious site surfaces or into the storm drain system.

b. Ensure the containment of sanitation facilities (e.g., portable toilets) to prevent discharges of pollutants to the storm water drainage system or receiving water.

c. Clean or replace sanitation facilities and inspecting them regularly for leaks and spills.

d. Cover waste disposal containers at the end of every business day and during a rain event.

e. Prevent discharges from waste disposal containers to the storm water drainage system or receiving water.

f. Contain and securely protecting stockpiled waste material from wind and rain at all times unless actively being used.

g. Implement procedures that effectively address hazardous and non-hazardous spills.

h. Develop a spill response and implementation element of the SWPPP prior to commencement of construction activities. The SWPPP shall require that:

i. Equipment and materials for cleanup of spills shall be available on site and that spills and leaks shall be cleaned up immediately and disposed of properly; and

ED_002781A_00003896-00715

ii. Appropriate spill response personnel are assigned and trained.

i. Ensure the containment of concrete washout areas and other washout areas that may contain additional pollutants so there is no discharge into the underlying soil and onto the surrounding areas.

3. Risk Level 3 dischargers shall implement good housekeeping for vehicle storage and maintenance, which, at a minimum, shall consist of the following:

   a. Prevent oil, grease, or fuel to leak in to the ground, storm drains or surface waters.

   b. Place all equipment or vehicles, which are to be fueled, maintained and stored in a designated area fitted with appropriate BMPs.

   c. Clean leaks immediately and disposing of leaked materials properly.

4. Risk Level 3 dischargers shall implement good housekeeping for landscape materials, which, at a minimum, shall consist of the following:

   a. Contain stockpiled materials such as mulches and topsoil when they are not actively being used.

   b. Contain fertilizers and other landscape materials when they are not actively being used.

   c. Discontinuing the application of any erodible landscape material within 2 days before a forecasted rain event or during periods of precipitation.

   d. Applying erodible landscape material at quantities and application rates according to manufacture recommendations or based on written specifications by knowledgeable and experienced field personnel.

   e. Stacking erodible landscape material on pallets and covering or storing such materials when not being used or applied.

5. Risk Level 3 dischargers shall conduct an assessment and create a list of potential pollutant sources and identify any areas of the site where additional BMPs are necessary to reduce or prevent pollutants in storm water discharges and authorized non-storm water discharges. This potential pollutant list shall be kept with the SWPPP and shall identify

ED_002781A_00003896-00716

all non-visible pollutants which are known, or should be known, to occur on the construction site. At a minimum, when developing BMPs, Risk Level 3 dischargers shall do the following:

a. Consider the quantity, physical characteristics (e.g., liquid, powder, solid), and locations of each potential pollutant source handled, produced, stored, recycled, or disposed of at the site.

b. Consider the degree to which pollutants associated with those materials may be exposed to and mobilized by contact with storm water.

c. Consider the direct and indirect pathways that pollutants may be exposed to storm water or authorized non-storm water discharges. This shall include an assessment of past spills or leaks, non-storm water discharges, and discharges from adjoining areas.

d. Ensure retention of sampling, visual observation, and inspection records.

e. Ensure effectiveness of existing BMPs to reduce or prevent pollutants in storm water discharges and authorized non-storm water discharges.

6. Risk Level 3 dischargers shall implement good housekeeping measures on the construction site to control the air deposition of site materials and from site operations. Such particulates can include, but are not limited to, sediment, nutrients, trash, metals, bacteria, oil and grease and organics.

7. **Additional Risk Level 3 Requirement:** Risk Level 3 dischargers shall document all housekeeping BMPs in the SWPPP and REAP(s) in accordance with the nature and phase of the construction project. Construction phases at traditional land development projects include Grading and Land Development Phase, Streets and Utilities, or Vertical Construction for traditional land development projects.

C. Non-Storm Water Management

1. Risk Level 3 dischargers shall implement measures to control all non-storm water discharges during construction.

2. Risk Level 3 dischargers shall wash vehicles in such a manner as to prevent non-storm water discharges to surface waters or MS4 drainage systems.

3. Risk Level 3 dischargers shall clean streets in such a manner as to prevent unauthorized non-storm water discharges from reaching surface water or MS4 drainage systems.

D. Erosion Control

1. Risk Level 3 dischargers shall implement effective wind erosion control.

2. Risk Level 3 dischargers shall provide effective soil cover for inactive[1] areas and all finished slopes, open space, utility backfill, and completed lots.

3. Dischargers shall limit the use of plastic materials when more sustainable, environmentally friendly alternatives exist. Where plastic materials are deemed necessary, the discharger shall consider the use of plastic materials resistant to solar degradation.

E. Sediment Controls

1. Risk Level 3 dischargers shall establish and maintain effective perimeter controls and stabilize all construction entrances and exits to sufficiently control erosion and sediment discharges from the site.

2. On sites where sediment basins are to be used, Risk Level 3 dischargers shall, at minimum, design sediment basins according to the method provided in CASQA's Construction BMP Guidance Handbook.

3. **Additional Risk Level 3 Requirement:** Risk Level 3 dischargers shall implement appropriate erosion control BMPs (runoff control and soil stabilization) in conjunction with sediment control BMPs for areas under active[2] construction.

4. **Additional Risk Level 3 Requirement:** Risk Level 3 dischargers shall apply linear sediment controls along the toe of the slope, face of the slope, and at the grade breaks of exposed slopes to comply with sheet flow lengths[3] in accordance with Table 1.

---

[1] Inactive areas of construction are areas of construction activity that have been disturbed and are not scheduled to be re-disturbed for at least 14 days.
[2] Active areas of construction are areas undergoing land surface disturbance. This includes construction activity during the preliminary stage, mass grading stage, streets and utilities stage and the vertical construction stage
[3] Sheet flow length is the length that shallow, low velocity flow travels across a site.

Table 1 - Critical Slope/Sheet Flow Length Combinations

Slope Percentage	Sheet flow length not to exceed
0-25%	20 feet
25-50%	15 feet
Over 50%	10 feet

5. **Additional Risk Level 3 Requirement:** Risk Level 3 dischargers shall ensure that construction activity traffic to and from the project is limited to entrances and exits that employ effective controls to prevent offsite tracking of sediment.

6. **Additional Risk Level 3 Requirement:** Risk Level 3 dischargers shall ensure that all storm drain inlets and perimeter controls, runoff control BMPs, and pollutant controls at entrances and exits (e.g. tire washoff locations) are maintained and protected from activities that reduce their effectiveness.

7. **Additional Risk Level 3 Requirement:** Risk Level 3 dischargers shall inspect on a daily basis all immediate access roads daily. At a minimum daily (when necessary) and prior to any rain event, the discharger shall remove any sediment or other construction activity-related materials that are deposited on the roads (by vacuuming or sweeping).

8. **Additional Risk Level 3 Requirement:** The Regional Water Board may require Risk Level 3 dischargers to implement additional site-specific sediment control requirements if the implementation of the other requirements in this section are not adequately protecting the receiving waters.

F. Run-on and Run-off Controls

Risk Level 3 dischargers shall effectively manage all run-on, all runoff within the site and all runoff that discharges off the site. Run-on from off site shall be directed away from all disturbed areas or shall collectively be in compliance with the effluent limitations in this General Permit.

G. Inspection, Maintenance and Repair

1. Risk Level 3 dischargers shall ensure that all inspection, maintenance repair and sampling activities at the project location shall be performed or supervised by a Qualified SWPPP Practitioner (QSP) representing the discharger. The QSP may delegate any or all of these activities to an employee appropriately trained to do the task(s).

2. Risk Level 3 dischargers shall perform weekly inspections and observations, and at least once each 24-hour period during extended storm events, to identify and record BMPs that need maintenance to operate effectively, that have failed, or that could fail to operate as intended. Inspectors shall be the QSP or be trained by the QSP.

3. Upon identifying failures or other shortcomings, as directed by the QSP, Risk Level 3 dischargers shall begin implementing repairs or design changes to BMPs within 72 hours of identification and complete the changes as soon as possible.

4. For each inspection required, Risk Level 3 dischargers shall complete an inspection checklist, using a form provided by the State Water Board or Regional Water Board or in an alternative format.

5. Risk Level 3 dischargers shall ensure that checklists shall remain onsite with the SWPPP and at a minimum, shall include:

    a. Inspection date and date the inspection report was written.

    b. Weather information, including presence or absence of precipitation, estimate of beginning of qualifying storm event, duration of event, time elapsed since last storm, and approximate amount of rainfall in inches.

    c. Site information, including stage of construction, activities completed, and approximate area of the site exposed.

    d. A description of any BMPs evaluated and any deficiencies noted.

    e. If the construction site is safely accessible during inclement weather, list the observations of all BMPs: erosion controls, sediment controls, chemical and waste controls, and non-storm water controls. Otherwise, list the results of visual inspections at all relevant outfalls, discharge points, downstream locations and any projected maintenance activities.

    f. Report the presence of noticeable odors or of any visible sheen on the surface of any discharges.

    g. Any corrective actions required, including any necessary changes to the SWPPP and the associated implementation dates.

    h. Photographs taken during the inspection, if any.

ED_002781A_00003896-00720

i. Inspector's name, title, and signature.

H. Rain Event Action Plan

1. **Additional Risk Level 3 Requirement:** The discharger shall ensure a QSP develop a Rain Event Action Plan (REAP) 48 hours prior to any likely precipitation event. A likely precipitation event is any weather pattern that is forecast to have a 50% or greater probability of producing precipitation in the project area. The QSP shall obtain a printed copy of precipitation forecast information from the National Weather Service Forecast Office (e.g., by entering the zip code of the project's location at http://www.srh.noaa.gov/forecast).

2. **Additional Risk Level 3 Requirement:** The discharger shall ensure a QSP develop the REAPs for all phases of construction (i.e., Grading and Land Development, Streets and Utilities, Vertical Construction, Final Landscaping and Site Stabilization).

3. **Additional Risk Level 3 Requirement:** The discharger shall ensure a QSP ensure that the REAP include, at a minimum, the following site information:

   a. Site Address.
   b. Calculated Risk Level (2 or 3).
   c. Site Storm Water Manager Information including the name, company, and 24-hour emergency telephone number.
   d. Erosion and Sediment Control Provider information including the name, company, and 24-hour emergency telephone number.
   e. Storm Water Sampling Agent information including the name, company, and 24-hour emergency telephone number.

4. **Additional Risk Level 3 Requirement:** The QSP shall include in the REAP, at a minimum, the following project phase information:

   a. Activities associated with each construction phase.
   b. Trades active on the construction site during each construction phase.
   c. Trade contractor information.
   d. Suggested actions for each project phase.

5. **Additional Risk Level 3 Requirement:** The QSP shall develop additional REAPs for project sites where construction activities are indefinitely halted or postponed (Inactive Construction). At a minimum, Inactive Construction REAPs must include:

a. Site Address.
b. Calculated Risk Level (2 or 3).
c. Site Storm Water Manager Information including the name, company, and 24-hour emergency telephone number.
d. Erosion and Sediment Control Provider information including the name, company, and 24-hour emergency telephone number.
e. Storm Water Sampling Agent information including the name, company, and 24-hour emergency telephone number.
f. Trades active on site during Inactive Construction.
g. Trade contractor information.
h. Suggested actions for inactive construction sites.

6. **Additional Risk Level 3 Requirement:** The discharger shall ensure a QSP begin implementation and make the REAP available onsite no later than 24 hours prior to the likely precipitation event.

7. **Additional Risk Level 3 Requirement:** The discharger shall ensure a QSP maintain onsite a paper copy of each REAP onsite in compliance with the record retention requirements of the Special Provisions in this General Permit.

I. Risk Level 3 Monitoring and Reporting Requirements

Table 2- Summary of Monitoring Requirements

Risk Level	Visual Inspections					Sample Collection	
	Quarterly Non-storm Water Discharge	Pre-storm Event		Daily Storm BMP	Post Storm	Storm Water Discharge	Receiving Water
		Baseline	REAP				
3	X	X	X	X	X	X	X[4]

1. Construction Site Monitoring Program Requirements

   a. Pursuant to Water Code Sections 13383 and 13267, all dischargers subject to this General Permit shall develop and implement a written site-specific Construction Site Monitoring Program (CSMP) in accordance with the requirements of this Section. The CSMP shall include all monitoring procedures and instructions, location maps, forms, and checklists as required in this section. The CSMP shall be developed prior to the commencement of construction activities, and revised as necessary to reflect project revisions. The CSMP shall be a part of the Storm Water Pollution Prevention Plan (SWPPP), included as an appendix or separate SWPPP chapter.

   b. Existing dischargers registered under the State Water Board Order No. 99-08-DWQ shall make and implement necessary revisions to their Monitoring Program to reflect the changes in this General Permit in a timely manner, but no later than July 1, 2010. Existing dischargers shall continue to implement their existing Monitoring Program in compliance with State Water Board Order No. 99-08-DWQ until the necessary revisions are completed according to the schedule above.

   c. When a change of ownership occurs for all or any portion of the construction site prior to completion or final stabilization, the new discharger shall comply with these requirements as of the date the ownership change occurs.

2. **Objectives**

   The CSMP shall be developed and implemented to address the following objectives:

[4] When NEL exceeded

ED_002781A_00003896-00723

a. To demonstrate that the site is in compliance with the Discharge Prohibitions and applicable Numeric Action Levels (NALs)/Numeric Effluent Limitations (NELs) of this General Permit.

b. To determine whether non-visible pollutants are present at the construction site and are causing or contributing to exceedances of water quality objectives.

c. To determine whether immediate corrective actions, additional Best Management Practice (BMP) implementation, or SWPPP revisions are necessary to reduce pollutants in storm water discharges and authorized non-storm water discharges.

d. To determine whether BMPs included in the SWPPP/Rain Event Action Plan (REAP) are effective in preventing or reducing pollutants in storm water discharges and authorized non-storm water discharges.

3. **Risk Level 3 – Visual Monitoring (Inspection) Requirements for Qualifying Rain Events**

a. Risk Level 3 dischargers shall visually observe (inspect) storm water discharges at all discharge locations within two business days (48 hours) after each qualifying rain event.

b. Risk Level 3 dischargers shall visually observe (inspect) the discharge of stored or contained storm water that is derived from and discharged subsequent to a qualifying rain event producing precipitation of ½ inch or more at the time of discharge. Stored or contained storm water that will likely discharge after operating hours due to anticipated precipitation shall be observed prior to the discharge during operating hours.

c. Risk Level 3 dischargers shall conduct visual observations (inspections) during business hours only.

d. Risk Level 3 dischargers shall record the time, date and rain gauge reading of all qualifying rain events.

e. Within 2 business days (48 hours) prior to each qualifying rain event, Risk Level 3 dischargers shall visually observe (inspect):

i. all storm water drainage areas to identify any spills, leaks, or uncontrolled pollutant sources. If needed, the discharger shall implement appropriate corrective actions.

ii. all BMPs to identify whether they have been properly implemented in accordance with the SWPPP/REAP. If needed, the discharger shall implement appropriate corrective actions.

iii. any storm water storage and containment areas to detect leaks and ensure maintenance of adequate freeboard.

f. For the visual observations (inspections) described in c.i. and c.iii above, Risk Level 3 dischargers shall observe the presence or absence of floating and suspended materials, a sheen on the surface, discolorations, turbidity, odors, and source(s) of any observed pollutants.

g. Within two business days (48 hours) after each qualifying rain event, Risk Level 3 dischargers shall conduct post rain event visual observations (inspections) to (1) identify whether BMPs were adequately designed, implemented, and effective, and (2) identify additional BMPs and revise the SWPPP accordingly.

h. Risk Level 3 dischargers shall maintain on-site records of all visual observations (inspections), personnel performing the observations, observation dates, weather conditions, locations observed, and corrective actions taken in response to the observations.

4. **Risk Level 3 – Water Quality Sampling and Analysis**

a. Risk Level 3 dischargers shall collect storm water grab samples from sampling locations, as defined in Section I.5. The storm water grab sample(s) obtained shall be representative of the flow and characteristics of the discharge.

b. At minimum, Risk Level 3 dischargers shall collect 3 samples per day of the qualifying event.

c. Risk Level 3 dischargers shall ensure that the grab samples collected of stored or contained storm water are from discharges subsequent to a qualifying rain event (producing precipitation of ½ inch or more at the time of discharge).

<u>Storm Water Effluent Monitoring Requirements</u>

d. Risk Level 3 dischargers shall analyze their effluent samples for:

i. pH and turbidity.

ii. Any additional parameters for which monitoring is required by the Regional Water Board.

e. Risk 3 dischargers shall electronically submit all storm event sampling results to the State Water Board no later than 5 days after the conclusion of the storm event.

f. Risk Level 3 discharger sites that have violated the turbidity daily average NEL shall analyze subsequent effluent samples for all the parameters specified in Section I.4.e, above, and Suspended Sediment Concentration (SSC).

Receiving Water Monitoring Requirements

g. In the event that a Risk Level 3 discharger violates an NEL contained in this General Permit and has a direct discharge into receiving waters, the Risk Level 3 discharger shall subsequently sample receiving waters (RWs) for all parameter(s) required in Section I.4.e above for the duration of coverage under this General Permit.

h. Risk Level 3 dischargers disturbing 30 acres or more of the landscape and with direct discharges into receiving waters shall conduct or participate in benthic macroinvertebrate bioassessment of RWs prior to commencement of construction activity (See Appendix 3).

i. Risk Level 3 dischargers shall obtain RW samples in accordance with the Receiving Water sampling location section (Section I.5), below.

5. **Risk Level 3 – Storm Water Discharge Water Quality Sampling Locations**

Effluent Sampling Locations

a. Risk Level 3 dischargers shall perform sampling and analysis of storm water discharges to characterize discharges associated with construction activity from the entire project disturbed area.

b. Risk Level 3 dischargers shall collect effluent samples at all discharge points where storm water is discharged off-site.

c. Risk Level 3 dischargers shall ensure that storm water discharge collected and observed represent[5] the effluent in each drainage area based on visual observation of the water and upstream conditions.

d. Risk Level 3 dischargers shall monitor and report site run-on from surrounding areas if there is reason to believe run-on may contribute to an exceedance of NALs or NELs.

e. Risk Level 3 dischargers who deploy an ATS on their site, or a portion on their site, shall collect ATS effluent samples and measurements from the discharge pipe or another location representative of the nature of the discharge.

f. Risk Level 3 dischargers shall select analytical test methods from the list provided in Table 3 below.

g. All storm water sample collection preservation and handling shall be conducted in accordance with Section I.7 "Storm Water Sample Collection and Handling Instructions" below.

Receiving Water Sampling Locations

h. **Upstream/up-gradient RW samples**: Risk Level 3 dischargers shall obtain any required upstream/up-gradient receiving water samples from a representative and accessible location as close as possible and upstream from the effluent discharge point.

i. **Downstream/down-gradient RW samples**: Risk Level 3 dischargers shall obtain any required downstream/down-gradient receiving water samples from a representative and accessible location as close as possible and downstream from the effluent discharge point.

j. If two or more discharge locations discharge to the same receiving water, Risk Level 3 dischargers may sample the receiving water at a single upstream and downstream location.

[5] For example, if there has been concrete work recently in an area, or drywall scrap is exposed to the rain, a pH sample shall be taken of drainage from the relevant work area. Similarly, if sediment-laden water is flowing through some parts of a silt fence, samples shall be taken of the sediment laden water even if most water flowing through the fence is clear.

6. **Risk Level 3 – Visual Observation and Sample Collection Exemptions**

   a. Risk Level 3 dischargers shall be prepared to collect samples and conduct visual observation (inspections) until the minimum requirements of Sections I.3 and I.4 above are completed. Risk Level 3 dischargers are not required to physically collect samples or conduct visual observation (inspections) under the following conditions:

      i. During dangerous weather conditions such as flooding and electrical storms.

      ii. Outside of scheduled site business hours.

   b. If no required samples or visual observation (inspections) are collected due to these exceptions, Risk Level 3 dischargers shall include an explanation in their SWPPP and in the Annual Report documenting why the sampling or visual observation (inspections) were not conducted.

7. **Risk Level 3 – Storm Water Sample Collection and Handling Instructions**

   a. Risk Level 3 dischargers shall refer to Table 3 below for test methods, detection limits, and reporting units.

   b. Risk Level 3 dischargers shall ensure that testing laboratories will receive samples within 48 hours of the physical sampling (unless otherwise required by the laboratory), and shall use only the sample containers provided by the laboratory to collect and store samples.

   c. Risk Level 3 dischargers shall designate and train personnel to collect, maintain, and ship samples in accordance with the Surface Water Ambient Monitoring Program's (SWAMP) 2008 Quality Assurance Program Plan (QAPrP).[6]

---

[6] Additional information regarding SWAMP's QAPrP and QAMP can be found at http://www.waterboards.ca.gov/water_issues/programs/swamp/.
QAPrP:http://www.waterboards.ca.gov/water_issues/programs/swamp/docs/qapp/swamp_qapp_master090108a.pdf
QAMP: http://www.waterboards.ca.gov/water_issues/programs/swamp/qamp.shtml

ED_002781A_00003896-00728

8. **Risk Level 3 – Monitoring Methods**

   a. Risk Level 3 dischargers shall include a description of the following items in the CSMP:

      i. Visual observation locations, visual observation procedures, and visual observation follow-up and tracking procedures.

      ii. Sampling locations, and sample collection and handling procedures. This shall include detailed procedures for sample collection, storage, preservation, and shipping to the testing lab to assure that consistent quality control and quality assurance is maintained. Dischargers shall attach to the monitoring program an example Chain of Custody form used when handling and shipping samples.

      iii. Identification of the analytical methods and related method detection limits (if applicable) for each parameter required in Section I.4 above.

   b. Risk Level 3 dischargers shall ensure that all sampling and sample preservation are in accordance with the current edition of "Standard Methods for the Examination of Water and Wastewater" (American Public Health Association). All monitoring instruments and equipment (including a discharger's own field instruments for measuring pH and turbidity) should be calibrated and maintained in accordance with manufacturers' specifications to ensure accurate measurements. Risk Level 3 dischargers shall ensure that all laboratory analyses are conducted according to test procedures under 40 CFR Part 136, unless other test procedures have been specified in this General Permit or by the Regional Water Board. With the exception of field analysis conducted by the discharger for turbidity and pH, all analyses should be sent to and conducted at a laboratory certified for such analyses by the State Department of Health Services (SSC exception). Risk Level 3 dischargers shall conduct their own field analysis of pH and may conduct their own field analysis of turbidity if the discharger has sufficient capability (qualified and trained employees, properly calibrated and maintained field instruments, etc.) to adequately perform the field analysis.

9. **Risk Level 3 – Analytical Methods**

   a. Risk Level 3 dischargers shall refer to Table 3 below for test methods, detection limits, and reporting units.

ED_002781A_00003896-00729

b. **pH**: Risk Level 3 dischargers shall perform pH analysis on-site with a calibrated pH meter or a pH test kit. Risk Level 3 dischargers shall record pH monitoring results on paper and retain these records in accordance with Section I.14, below.

c. **Turbidity**: Risk Level 3 dischargers shall perform turbidity analysis using a calibrated turbidity meter (turbidimeter), either on-site or at an accredited lab. Acceptable test methods include Standard Method 2130 or USEPA Method 180.1. The results will be recorded in the site log book in Nephelometric Turbidity Units (NTU).

d. **Suspended sediment concentration (SSC)**: Risk Level 3 dischargers shall perform SSC analysis using ASTM Method D3977-97.

e. **Bioassessment**: Risk Level 3 dischargers shall perform bioassessment sampling and analysis according to Appendix 3 of this General Permit.

10. **Risk Level 3 - Non-Storm Water Discharge Monitoring Requirements**

a. Visual Monitoring Requirements:

i. Risk Level 3 dischargers shall visually observe (inspect) each drainage area for the presence of (or indications of prior) unauthorized and authorized non-storm water discharges and their sources.

ii. Risk Level 3 dischargers shall conduct one visual observation (inspection) quarterly in each of the following periods: January-March, April-June, July-September, and October-December. Visual observation (inspections) are only required during daylight hours (sunrise to sunset).

iii. Risk Level 3 dischargers shall ensure that visual observations (inspections) document the presence or evidence of any non-storm water discharge (authorized or unauthorized), pollutant characteristics (floating and suspended material, sheen, discoloration, turbidity, odor, etc.), and source. Risk Level 3 dischargers shall maintain on-site records indicating the personnel performing the visual observation (inspections), the dates and approximate time each drainage area and non-storm water discharge was observed, and the response taken to eliminate unauthorized non-storm water discharges and to

reduce or prevent pollutants from contacting non-storm water discharges.

b. Effluent Sampling Locations:

i. Risk Level 3 dischargers shall sample effluent at all discharge points where non-storm water and/or authorized non-storm water is discharged off-site.

ii. Risk Level 3 dischargers shall send all non-storm water sample analyses to a laboratory certified for such analyses by the State Department of Health Services.

iii. Risk Level 3 dischargers shall monitor and report run-on from surrounding areas if there is reason to believe run-on may contribute to an exceedance of NALs or NELs.

11. **Risk Level 3 – Non-Visible Pollutant Monitoring Requirements**

a. Risk Level 3 dischargers shall collect one or more samples during any breach, malfunction, leakage, or spill observed during a visual inspection which could result in the discharge of pollutants to surface waters that would not be visually detectable in storm water.

b. Risk Level 3 dischargers shall ensure that water samples are large enough to characterize the site conditions.

c. Risk Level 3 dischargers shall collect samples at all discharge locations that can be safely accessed.

d. Risk Level 3 dischargers shall collect samples during the first two hours of discharge from rain events that occur during business hours and which generate runoff.

e. Risk Level 3 dischargers shall analyze samples for all non-visible pollutant parameters (if applicable) - parameters indicating the presence of pollutants identified in the pollutant source assessment required (Risk Level 3 dischargers shall modify their CSMPs to address these additional parameters in accordance with any updated SWPPP pollutant source assessment).

f. Risk Level 3 dischargers shall collect a sample of storm water that has not come in contact with the disturbed soil or the materials stored or used on-site (uncontaminated sample) for comparison with the discharge sample.

g. Risk Level 3 dischargers shall compare the uncontaminated sample to the samples of discharge using field analysis or through laboratory analysis.[7]

h. Risk Level 3 dischargers shall keep all field /or analytical data in the SWPPP document.

12. **Risk Level 3 – Watershed Monitoring Option**

Risk Level 3 dischargers who are part of a qualified regional watershed-based monitoring program may be eligible for relief from the requirements in Sections I.5. The Regional Water Board may approve proposals to substitute an acceptable watershed-based monitoring program by determining if the watershed-based monitoring program will provide substantially similar monitoring information in evaluating discharger compliance with the requirements of this General Permit.

13. **Risk Level 3 – Particle Size Analysis for Project Risk Justification**

Risk Level 3 dischargers justifying an alternative project risk shall report a soil particle size analysis used to determine the RUSLE K-Factor. ASTM D-422 (Standard Test Method for Particle-Size Analysis of Soils), as revised, shall be used to determine the percentages of sand, very fine sand, silt, and clay on the site.

14. **Risk Level 3 – Records**

Risk Level 3 dischargers shall retain records of all storm water monitoring information and copies of all reports (including Annual Reports) for a period of at least three years. Risk Level 3 dischargers shall retain all records on-site while construction is ongoing. These records include:

a. The date, place, time of facility inspections, sampling, visual observation (inspections), and/or measurements, including precipitation.

b. The individual(s) who performed the facility inspections, sampling, visual observation (inspections), and or measurements.

c. The date and approximate time of analyses.

[7] For laboratory analysis, all sampling, sample preservation, and analyses must be conducted according to test procedures under 40 CFR Part 136. Field discharge samples shall be collected and analyzed according to the specifications of the manufacturer of the sampling devices employed.

ED_002781A_00003896-00732

d. The individual(s) who performed the analyses.

e. A summary of all analytical results from the last three years, the method detection limits and reporting units, the analytical techniques or methods used, and the chain of custody forms.

f. Rain gauge readings from site inspections.

g. Quality assurance/quality control records and results.

h. Non-storm water discharge inspections and visual observation (inspections) and storm water discharge visual observation records (see Sections I.3 and I.10 above).

i. Visual observation and sample collection exception records (see Section I.6 above).

j. The records of any corrective actions and follow-up activities that resulted from analytical results, visual observation (inspections), or inspections.

15. **Risk Level 3 – NAL Exceedance Report**

a. In the event that any effluent sample exceeds an applicable NAL, Risk Level 3 dischargers shall electronically submit all storm event sampling results to the State Water Board no later than 10 days after the conclusion of the storm event. The Regional Boards have the authority to require the submittal of an NAL Exceedance Report.

b. Risk Level 3 dischargers shall certify each NAL Exceedance Report in accordance with the Special Provisions for Construction Activity In this General Permit.

c. Risk Level 3 dischargers shall retain an electronic or paper copy of each NAL Exceedance Report for a minimum of three years after the date the annual report is filed.

d. Risk Level 3 dischargers shall include in the NAL Exceedance Report:

i. The analytical method(s), method reporting unit(s), and method detection limit(s) of each analytical parameter (analytical results that are less than the method detection limit shall be reported as "less than the method detection limit").

ii. The date, place, time of sampling, visual observation (inspections), and/or measurements, including precipitation.

iii. A description of the current BMPs associated with the effluent sample that exceeded the NAL and the proposed corrective actions taken.

16. **Risk Level 3 – NEL Violation Report**

a. Risk Level 3 dischargers shall electronically submit all storm event sampling results to the State Water Board no later than 5 days after the conclusion of the storm event.

b. In the event that a discharger has violated an applicable NEL, Risk Level 3 dischargers shall submit an NEL Violation Report to the State Water Board within 24 hours after the NEL exceedance has been identified.

c. Risk Level 3 dischargers shall certify each NEL Violation Report in accordance with the Special Provisions for Construction Activity in this General Permit.

d. Risk Level 3 dischargers shall retain an electronic or paper copy of each NEL Violation Report for a minimum of three years after the date the annual report is filed.

e. Risk Level 3 dischargers shall include in the NEL Violation Report:

i. The analytical method(s), method reporting unit(s), and method detection limit(s) of each analytical parameter (analytical results that are less than the method detection limit shall be reported as "less than the method detection limit");

ii. The date, place, time of sampling, visual observation (inspections), and/or measurements, including precipitation; and

iii. A Description of the current onsite BMPs, and the proposed corrective actions taken to manage the NEL exceedance.

f. Compliance Storm Exemption - In the event that an applicable NEL has been exceeded during a storm event equal to or larger than the Compliance Storm Event, Risk level 3 discharger shall report the on-site rain gauge reading and nearby governmental rain gauge readings for verification.

17. **Risk Level 3 – Bioassessment**

a. Risk Level 3 dischargers with a total project-related ground disturbance exceeding 30 acres shall:

i. Conduct bioassessment monitoring, as described in Appendix 3.

ii. Include the collection and reporting of specified in stream biological data and physical habitat.

iii. Use the bioassessment sample collection and Quality Assurance & Quality Control (QA/QC) protocols developed by the State of California's Surface Water Ambient Monitoring Program (SWAMP).[8]

b. Risk Level 3 dischargers qualifying for bioassessment, where construction commences out of an index period for the site location shall:

i. Receive Regional Board approval for the sampling exception.

ii. Conduct bioassessment monitoring, as described in Appendix 3.

iii. Include the collection and reporting of specified instream biological data and physical habitat.

iv. Use the bioassessment sample collection and Quality Assurance & Quality Control (QA/QC) protocols developed by the State of California's Surface Water Ambient Monitoring Program (SWAMP).

OR

v. Make a check payable to: Cal State Chico Foundation (SWAMP Bank Account) or San Jose State Foundation (SWAMP Bank Account) and include the WDID# on the check for the amount calculated for the exempted project.

vi. Send a copy of the check to the Regional Water Board office for the site's region.

vii. Invest $**7,500.00 X The number of samples required** into the SWAMP program as compensation (upon regional board approval).

[8] http://www.waterboards.ca.gov/water_issues/programs/swamp/.

ED_002781A_00003896-00735

Table 3 – Risk Level 3 Test Methods, Detection Limits, Reporting Units and Applicable NALs/NELs

Parameter	Test Method / Protocol	Discharge Type	Min. Detection Limit	Reporting Units	Numeric Action Level	Numeric Effluent Limitation
pH	Field test with calibrated portable instrument	Risk Level 3 Discharges	0.2	pH units	lower NAL = 6.5 upper NAL = 8.5	lower NEL = 6.0 upper NEL = 9.0
Turbidity	EPA 0180.1 and/or field test with calibrated portable instrument	Risk Level 3 Discharges other than ATS	1	NTU	250 NTU	500 NTU
		For ATS discharges	1	NTU	N/A	10 NTU for Daily Weighted Average & 20 NTU for Any Single Sample
SSC	ASTM Method D 3977-97[9]	Risk Level 3 (if NEL exceeded)	5	mg/L	N/A	N/A
Bioassessment	(STE) Level I of (SAFIT),[10] fixed-count of 600 org/sample	Risk Level 3 projects> 30 acres	N/A	N/A	N/A	N/A

[9] ASTM, 1999, Standard Test Method for Determining Sediment Concentration in Water Samples: American Society of Testing and Materials, D 3977-97, Vol. 11.02, pp. 389-394.

[10] The current SAFIT STEs (28 November 2006) list requirements for both the Level I and Level II taxonomic effort, and are located at: http://www.swrcb.ca.gov/swamp/docs/safit/ste_list.pdf. When new editions are published by SAFIT, they will supersede all previous editions. All editions will be posted at the State Water Board's SWAMP website.

ATTACHMENT F:
Active Treatment System (ATS) Requirements

Table 1 – Numeric Effluent Limitations, Numeric Action Levels, Test Methods, Detection Limits, and Reporting Units

Parameter	Test Method	Discharge Type	Min. Detection Limit	Units	Numeric Action Level	Numeric Effluent Limitation
Turbidity	EPA 0180.1 and/or field test with a calibrated portable instrument	For ATS discharges	1	NTU	N/A	10 NTU for Daily Flow-Weighted Average & 20 NTU for Any Single Sample

A. Dischargers choosing to implement an Active Treatment System (ATS) on their site shall comply with all of the requirements in this Attachment.

B. The discharger shall maintain a paper copy of each ATS specification onsite in compliance with the record retention requirements in the Special Provisions of this General Permit.

C. ATS Design, Operation and Submittals

1. The ATS shall be designed and approved by a Certified Professional in Erosion and Sediment Control (CPESC), a Certified Professional in Storm Water Quality (CPSWQ); a California registered civil engineer; or any other California registered engineer.

2. The discharger shall ensure that the ATS is designed in a manner to preclude the accidental discharge of settled floc[1] during floc pumping or related operations.

3. The discharger shall design outlets to dissipate energy from concentrated flows.

4. The discharger shall install and operate an ATS by assigning a lead person (or project manager) who has either a minimum of five years construction storm

[1] Floc is defined as a clump of solids formed by the chemical action in ATS systems.

ED_002781A_00003896-00737

water experience or who is a licensed contractors specifically holding a California Class A Contractors license.[2]

5. The discharger shall prepare an ATS Plan that combines the site-specific data and treatment system information required to safely and efficiently operate an ATS. The ATS Plan shall be electronically submitted to the State Water Board at least 14 days prior to the planned operation of the ATS and a paper copy shall be available onsite during ATS operation. At a minimum, the ATS Plan shall include:

   a. ATS Operation and Maintenance Manual for All Equipment.

   b. ATS Monitoring, Sampling & Reporting Plan, including Quality Assurance/Quality Control (QA/QC).

   c. ATS Health and Safety Plan.

   d. ATS Spill Prevention Plan.

6. The ATS shall be designed to capture and treat (within a 72-hour period) a volume equivalent to the runoff from a 10-year, 24-hour storm event using a watershed runoff coefficient of 1.0.

D. Treatment – Chemical Coagulation/Flocculation

1. Jar tests shall be conducted using water samples selected to represent typical site conditions and in accordance with ASTM D2035-08 (2003).

2. The discharger shall conduct, at minimum, six site-specific jar tests (per polymer with one test serving as a control) for each project to determine the proper polymer and dosage levels for their ATS.

3. Single field jar tests may also be conducted during a project if conditions warrant, for example if construction activities disturb changing types of soils, which consequently cause change in storm water and runoff characteristics.

E. Residual Chemical and Toxicity Requirements

1. The discharger shall utilize a residual chemical test method that has a method detection limit (MDL) of 10% or less than the maximum allowable threshold

[2] Business and Professions Code Division 3, Chapter 9, Article 4, Class A Contractor: A general engineering contractor is a contractor whose principal contracting business is in connection with fixed works requiring specialized engineering knowledge and skill. [http://www.cslb.ca.gov/General-Information/library/licensing-classifications.asp].

concentration[3] (MATC) for the specific coagulant in use and for the most sensitive species of the chemical used.

2. The discharger shall utilize a residual chemical test method that produces a result within one hour of sampling.

3. The discharger shall have a California State certified laboratory validate the selected residual chemical test. Specifically the lab will review the test protocol, test parameters, and the detection limit of the coagulant. The discharger shall electronically submit this documentation as part of the ATS Plan.

4. If the discharger cannot utilize a residual chemical test method that meets the requirements above, the discharger shall operate the ATS in Batch Treatment[4] mode.

5. A discharger planning to operate in Batch Treatment mode shall perform toxicity testing in accordance with the following:

   a. The discharger shall initiate acute toxicity testing on effluent samples representing effluent from each batch prior to discharge[5]. All bioassays shall be sent to a laboratory certified by the Department of Health Services (DHS) Environmental Laboratory Accreditation Program (ELAP). The required field of testing number for Whole Effluent Toxicity (WET) testing is E113.[6]

   b. Acute toxicity tests shall be conducted with the following species and protocols. The methods to be used in the acute toxicity testing shall be those outlined for a 96-hour acute test in "Methods for Measuring the Acute Toxicity of Effluents and Receiving Water to Freshwater and Marine Organisms, USEPA-841-R-02-012" for Fathead minnow, *Pimephales promelas* (fathead minnow). Acute toxicity for *Oncorhynchus mykiss* (Rainbow Trout) may be used as a substitute for testing fathead minnows.

   c. All toxicity tests shall meet quality assurance criteria and test acceptability criteria in the most recent versions of the EPA test method for WET testing.

   d. The discharger shall electronically report all acute toxicity testing.

---

[3] The Maximum Allowable Threshold Concentration (MATC) is the allowable concentration of residual, or dissolved, coagulant/flocculant in effluent. The MATC shall be coagulant/flocculant-specific, and based on toxicity testing conducted by an independent, third-party laboratory. A typical MATC would be:
The MATC is equal to the geometric mean of the NOEC (No Observed Effect Concentration) and LOEC (Lowest Observed Effect Concentration) Acute and Chronic toxicity results for most sensitive species determined for the specific coagulant. The most sensitive species test shall be used to determine the MATC.

[4] Batch Treatment mode is defined as holding or recirculating the treated water in a holding basin or tank(s) until treatment is complete or the basin or storage tank(s) is full.

[5] This requirement only requires that the test be initiated prior to discharge.

[6] http://www.dhs.ca.gov/ps/ls/elap/pdf/FOT_Desc.pdf.

F. Filtration

1. The ATS shall include a filtration step between the coagulant treatment train and the effluent discharge. This is commonly provided by sand, bag, or cartridge filters, which are sized to capture suspended material that might pass through the clarifier tanks.

2. Differential pressure measurements shall be taken to monitor filter loading and confirm that the final filter stage is functioning properly.

G. Residuals Management

1. Sediment shall be removed from the storage or treatment cells as necessary to ensure that the cells maintain their required water storage (i.e., volume) capability.

2. Handling and disposal of all solids generated during ATS operations shall be done in accordance with all local, state, and federal laws and regulations.

H. ATS Instrumentation

1. The ATS shall be equipped with instrumentation that automatically measures and records effluent water quality data and flow rate.

2. The minimum data recorded shall be consistent with the Monitoring and Reporting requirements below, and shall include:

   a. Influent Turbidity

   b. Effluent Turbidity

   c. Influent pH

   d. Effluent pH

   e. Residual Chemical

   f. Effluent Flow rate

   g. Effluent Flow volume

3. Systems shall be equipped with a data recording system, such as data loggers or webserver-based systems, which records each measurement on a frequency no longer than once every 15 minutes.

4. Cumulative flow volume shall be recorded daily. The data recording system shall have the capacity to record a minimum of seven days continuous data.

5. Instrumentation systems shall be interfaced with system control to provide auto shutoff or recirculation in the event that effluent measurements exceed turbidity or pH.

6. The system shall also assure that upon system upset, power failure, or other catastrophic event, the ATS will default to a recirculation mode or safe shut down.

7. Instrumentation (flow meters, probes, valves, streaming current detectors, controlling computers, etc.) shall be installed and maintained per manufacturer's recommendations, which shall be included in the QA/QC plan.

8. The QA/QC plan shall also specify calibration procedures and frequencies, instrument method detection limit or sensitivity verification, laboratory duplicate procedures, and other pertinent procedures.

9. The instrumentation system shall include a method for controlling coagulant dose, to prevent potential overdosing. Available technologies include flow/turbidity proportional metering, periodic jar testing and metering pump adjustment, and ionic charge measurement controlling the metering pump.

I. ATS Effluent Discharge

1. ATS effluent shall comply with all provisions and prohibitions in this General Permit, specifically the NELs.

2. NELs for discharges from an ATS:

   a. Turbidity of all ATS discharges shall be less than 10 NTU for daily flow-weighted average of all samples and 20 NTU for any single sample.

   b. Residual Chemical shall be < 10% of MATC[7] for the most sensitive species of the chemical used.

3. If an analytical effluent sampling result is outside the range of pH NELs (i.e., is below the lower NEL for pH or exceeds the upper NEL for pH) or exceeds the turbidity NEL (as listed in Table 1), the discharger is in violation of this General

[7] The Maximum Allowable Threshold Concentration (MATC) is the allowable concentration of residual, or dissolved, coagulant/flocculant in effluent. The MATC shall be coagulant/flocculant-specific, and based on toxicity testing conducted by an independent, third-party laboratory. The MATC is equal to the geometric mean of the NOEC (No Observed Effect Concentration) and LOEC (Lowest Observed Effect Concentration) Acute and Chronic toxicity results for most sensitive species determined for the specific coagulant. The most sensitive species test shall be used to determine the MATC.

ED_002781A_00003896-00741

Permit and shall electronically file the results in violation within 24-hours of obtaining the results.

4. If ATS effluent is authorized to discharge into a sanitary sewer system, the discharger shall comply with any pre-treatment requirements applicable for that system. The discharger shall include any specific criteria required by the municipality in the ATS Plan.

5. Compliance Storm Event:

   Discharges of storm water from ATS shall comply with applicable NELs (above) unless the storm event causing the discharges is determined after the fact to be equal to or larger than the Compliance Storm Event (expressed in inches of rainfall). The Compliance Storm Event for ATS discharges is the 10 year, 24 hour storm, as determined using these maps:

   http://www.wrcc.dri.edu/pcpnfreq/nca10y24.gif
   http://www.wrcc.dri.edu/pcpnfreq/sca10y24.gif

   This exemption is dependent on the submission of rain gauge data verifying the storm event is equal to or larger than the Compliance Storm.

J. Operation and Maintenance Plan

1. Each Project shall have a site-specific Operation and Maintenance (O&M) Manual covering the procedures required to install, operate and maintain the ATS.[8]

2. The O&M Manual shall only be used in conjunction with appropriate project-specific design specifications that describe the system configuration and operating parameters.

3. The O&M Manual shall have operating manuals for specific pumps, generators, control systems,and other equipment.

K. Sampling and Reporting Quality Assurance/ Quality Check (QA/QC) Plan

4. A project-specific QA/QC Plan shall be developed for each project. The QA/QC Plan shall include at a minimum:

   a. Calibration – Calibration methods and frequencies for all system and field instruments shall be specified.

[8] The manual is typically in a modular format covering generalized procedures for each component that is utilized in a particular system.

ED_002781A_00003896-00742

b. Method Detection Limits (MDLs) – The methods for determining MDLs shall be specified for each residual coagulant measurement method. Acceptable minimum MDLs for each method, specific to individual coagulants, shall be specified.

c. Laboratory Duplicates – Requirements for monthly laboratory duplicates for residual coagulant analysis shall be specified.

L. Personnel Training

1. Operators shall have training specific to using an ATS and liquid coagulants for storm water discharges in California.

2. The training shall be in the form of a formal class with a certificate and requirements for testing and certificate renewal.

3. Training shall include a minimum of eight hours classroom and 32 hours field training. The course shall cover the following topics:

   a. Coagulation Basics –Chemistry and physical processes

   b. ATS System Design and Operating Principles

   c. ATS Control Systems

   d. Coagulant Selection – Jar testing, dose determination, etc.

   e. Aquatic Safety/Toxicity of Coagulants, proper handling and safety

   f. Monitoring, Sampling, and Analysis

   g. Reporting and Recordkeeping

   h. Emergency Response

M. Active Treatment System (ATS) Monitoring Requirements

Any discharger who deploys an ATS on their site shall conduct the following:

1. Visual Monitoring

   a. A designated responsible person shall be on site daily at all times during treatment operations.

ED_002781A_00003896-00743

b. Daily on-site visual monitoring of the system for proper performance shall be conducted and recorded in the project data log.

   i. The log shall include the name and phone number of the person responsible for system operation and monitoring.

   ii. The log shall include documentation of the responsible person's training.

2. Operational and Compliance Monitoring

   a. Flow shall be continuously monitored and recorded at not greater than 15-minute intervals for total volume treated and discharged.

   b. Influent and effluent pH must be continuously monitored and recorded at not greater than 15-minute intervals.

   c. Influent and effluent turbidity (expressed in NTU) must be continuously monitored and recorded at not greater than 15-minute intervals.

   d. The type and amount of chemical used for pH adjustment, if any, shall be monitored and recorded.

   e. Dose rate of chemical used in the ATS system (expressed in mg/L) shall be monitored and reported 15-minutes after startup and every 8 hours of operation.

   f. Laboratory duplicates – monthly laboratory duplicates for residual coagulant analysis must be performed and records shall be maintained onsite.

   g. Effluent shall be monitored and recorded for residual chemical/additive levels.

   h. If a residual chemical/additive test does not exist and the ATS is operating in a batch treatment mode of operation refer to the toxicity monitoring requirements below.

3. Toxicity Monitoring

   A discharger operating in batch treatment mode shall perform toxicity testing in accordance with the following:

   a. The discharger shall initiate acute toxicity testing on effluent samples representing effluent from each batch prior to discharge.[9] All bioassays shall be sent to a laboratory certified by the Department of Health Services (DHS)

[9] This requirement only requires that the test be initiated prior to discharge.

ED_002781A_00003896-00744

Environmental Laboratory Accreditation Program (ELAP). The required field of testing number for Whole Effluent Toxicity (WET) testing is E113.[10]

b. Acute toxicity tests shall be conducted with the following species and protocols. The methods to be used in the acute toxicity testing shall be those outlined for a 96-hour acute test in "Methods for Measuring the Acute Toxicity of Effluents and Receiving Water to Freshwater and Marine Organisms, USEPA-841-R-02-012" for Fathead minnow, *Pimephales promelas or* Rainbow trout *Oncorhynchus mykiss* may be used as a substitute for fathead minnow.

c. All toxicity tests shall meet quality assurance criteria and test acceptability criteria in the most recent versions of the EPA test method for WET testing.[11]

4. Reporting and Recordkeeping

At a minimum, every 30 days a LRP representing the discharger shall access the State Water Boards Storm Water Mulit-Application and Report Tracking system (SMARTS) and electronically upload field data from the ATS. Records must be kept for three years after the project is completed .

5. Non-compliance Reporting

a. Any indications of toxicity or other violations of water quality objectives shall be reported to the appropriate regulatory agency as required by this General Permit.

b. Upon any measurements that exceed water quality standards, the system operator shall immediately notify his supervisor or other responsible parties, who shall notify the Regional Water Board.

c. If any monitoring data exceeds any applicable NEL in this General Permit, the discharger shall electronically submit a NEL Violation Report to the State Water Board within 24 hours after the NEL exceedance has been identified.

i. ATS dischargers shall certify each NEL Violation Report in accordance with the Special Provisions for Construction Activity in this General Permit.

ii. ATS dischargers shall retain an electronic or paper copy of each NEL Violation Report for a minimum of three years after the date the annual report is filed.

iii. ATS dischargers shall include in the NEL Violation Report:

[10] http://www.dhs.ca.gov/ps/ls/elap/pdf/FOT_Desc.pdf.
[11] http://www.epa.gov/waterscience/methods/wet/.

ED_002781A_00003896-00745

(1) The analytical method(s), method reporting unit(s), and method detection limit(s) of each analytical parameter (analytical results that are less than the method detection limit shall be reported as "less than the method detection limit");

(2) The date, place, time of sampling, visual observation (inspections), and/or measurements, including precipitation; and

(3) A description of the current onsite BMPs, and the proposed corrective actions taken to manage the NEL exceedance.

iv. Compliance Storm Exemption - In the event that an applicable NEL has been exceeded during a storm event equal to or larger than the Compliance Storm Event, ATS dischargers shall report the on-site rain gauge reading and nearby governmental rain gauge readings for verification.

ED_002781A_00003896-00746

Risk Determination Worksheet

Step 1 Determine Sediment Risk via one of the options listed:

1. GIS Map Method - EPA Rainfall Erosivity Calculator & GIS map
2. Individual Method - EPA Rainfall Erosivity Calculator & Individual Data

Step 2 Determine Receiving Water Risk via one of the options listed:

1. GIS map of Sediment Sensitive Watersheds provided (in development)
2. List of Sediment Sensitive Watersheds provided

Step 3 Determine Combined Risk Level

ED_002781A_00003896-00747

Sediment Risk Factor Worksheet	Entry
A) R Factor	
Analyses of data indicated that when factors other than rainfall are held constant, soil loss is directly proportional to a rainfall factor composed of total storm kinetic energy (E) times the maximum 30-min intensity (I30) (Wischmeier and Smith, 1958). The numerical value of R is the average annual sum of EI30 for storm events during a rainfall record of at least 22 years. "Isoerodent" maps were developed based on R values calculated for more than 1000 locations in the Western U.S. Refer to the link below to determine the R factor for the project site. http://cfpub.epa.gov/npdes/stormwater/LEW/lewCalculator.cfm	
R Factor Value	0
B) K Factor (weighted average, by area, for all site soils)	
The soil-erodibility factor K represents: (1) susceptibility of soil or surface material to erosion, (2) transportability of the sediment, and (3) the amount and rate of runoff given a particular rainfall input, as measured under a standard condition. Fine-textured soils that are high in clay have low K values (about 0.05 to 0.15) because the particles are resistant to detachment. Coarse-textured soils, such as sandy soils, also have low K values (about 0.05 to 0.2) because of high infiltration resulting in low runoff even though these particles are easily detached. Medium-textured soils, such as a silt loam, have moderate K values (about 0.25 to 0.45) because they are moderately susceptible to particle detachment and they produce runoff at moderate rates. Soils having a high silt content are especially susceptible to erosion and have high K values, which can exceed 0.45 and can be as large as 0.65. Silt-size particles are easily detached and tend to crust, producing high rates and large volumes of runoff. Use Site-specific data must be submitted. Site-specific K factor guidance	
K Factor Value	0
C) LS Factor (weighted average, by area, for all slopes)	
The effect of topography on erosion is accounted for by the LS factor, which combines the effects of a hillslope-length factor, L, and a hillslope-gradient factor, S. Generally speaking, as hillslope length and/or hillslope gradient increase, soil loss increases. As hillslope length increases, total soil loss and soil loss per unit area increase due to the progressive accumulation of runoff in the downslope direction. As the hillslope gradient increases, the velocity and erosivity of runoff increases. Use the LS table located in separate tab of this spreadsheet to determine LS factors. Estimate the weighted LS for the site prior to construction. LS Table	
LS Factor Value	0
Watershed Erosion Estimate (=RxKxLS) in tons/acre	0
Site Sediment Risk Factor Low Sediment Risk: < 15 tons/acre Medium Sediment Risk: >=15 and <75 tons/acre High Sediment Risk: >= 75 tons/acre	**Low**

For the GIS Map Method, the R factor for the project is calculated using the online calculator at (see cell to right). The product of K and LS are shown on the figure below. To determine soil loss in tons per acre, multiply the R factor times the value for K times LS from the map.
http://cfpub.epa.gov/npdes/stormwater/LEW/lewCalculator.cfm

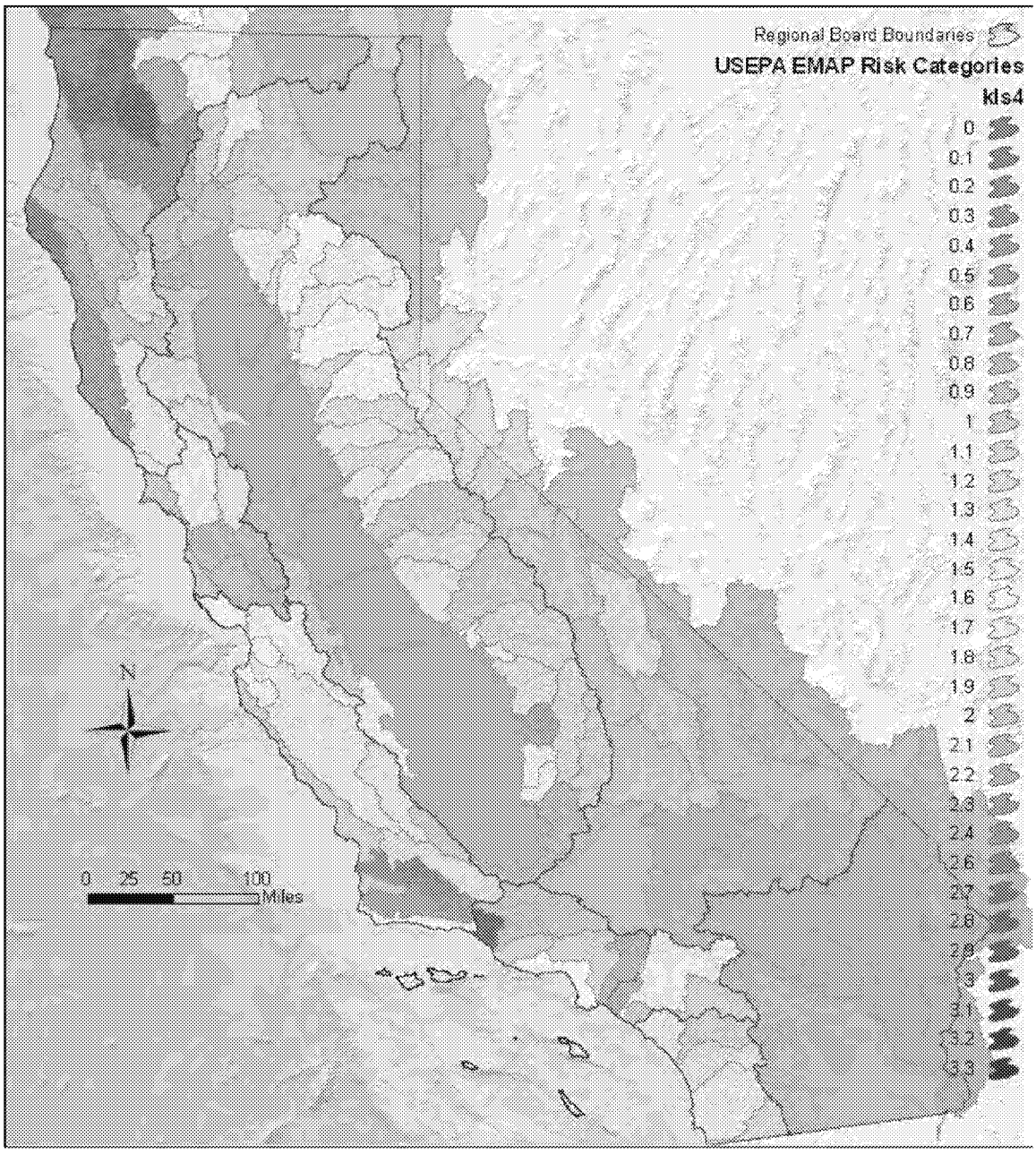

Water Boards

State Water Resources Control Board, January 15, 2008

Receiving Water (RW) Risk Factor Worksheet	Entry	Score
A. Watershed Characteristics	**yes/no**	
A.1. Does the disturbed area discharge (either directly or indirectly) to a **303(d)-listed waterbody impaired by sediment**? (For help with impaired waterbodies please check the attached worksheet or visit the link below) or has a **USEPA approved TMDL implementation plan for sediment**?: 2006 Approved Sediment-impared WBs Worksheet http://www.waterboards.ca.gov/water_issues/programs/tmdl/303d_lists2006_epa.shtml **OR**	**Yes**	**High**
A.2. Does the disturbed area discharge to a waterbody with designated beneficial uses of SPAWN & COLD & MIGRATORY? http://www.ice.ucdavis.edu/geowbs/asp/wbguse.asp		

Combined Risk Level Matrix

Receiving Water Risk	Sediment Risk: Low	Sediment Risk: Medium	Sediment Risk: High
Low	Level 1	Level 2	
High	Level 2		Level 3

Project Sediment Risk: Low

Project RW Risk: High

Project Combined Risk: Level 2

Soil Erodibility Factor (K)

The K factor can be determined by using the nomograph method, which requires that a particle size analysis (ASTM D-422) be done to determine the percentages of sand, very fine sand, silt and clay. Use the figure below to determine appropriate K value.

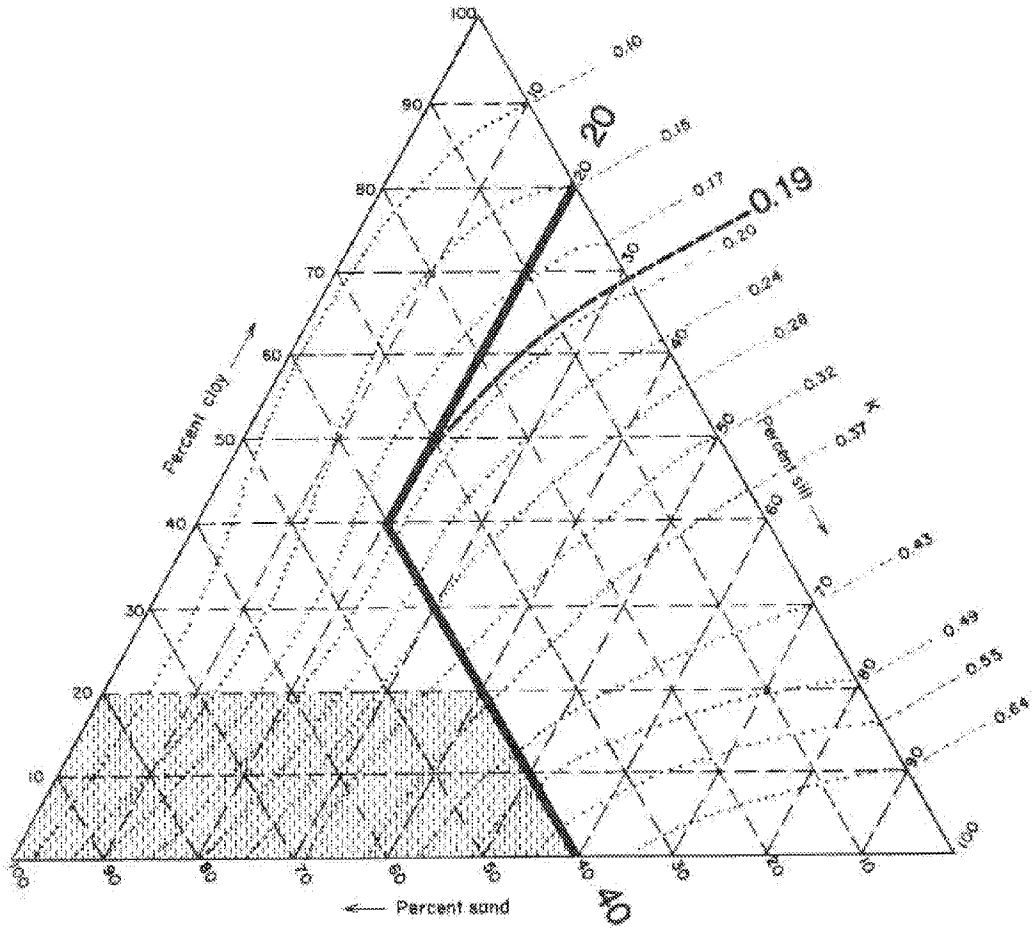

Erickson triangular nomograph used to estimate soil erodibility (K) factor.
The figure above is the USDA nomograph used to determine the K factor for a soil, based on its texture (% silt plus very fine sand, % sand, % organic matter, soil structure, and permeability).
Nomograph from Erickson 1977 as referenced in Goldman et. al., 1986.

Sheet Flow Length (ft)	Average Watershed Slope (%) 0.2	0.5	1.0	2.0	3.0	4.0	5.0	6.0	8.0	10.0	12.0	14.0	16.0	20.0	
<3	0.05	0.07	0.09	0.13	0.17	0.20	0.23	0.26	0.32	0.35	0.36	0.38	0.39	0.41	
6	0.05	0.07	0.09	0.13	0.17	0.20	0.23	0.26	0.32	0.37	0.41	0.45	0.49	0.56	
9	0.05	0.07	0.09	0.13	0.17	0.20	0.23	0.26	0.32	0.38	0.45	0.51	0.56	0.67	
12	0.05	0.07	0.09	0.13	0.17	0.20	0.23	0.26	0.32	0.39	0.47	0.55	0.62	0.76	
15	0.05	0.07	0.09	0.13	0.17	0.20	0.23	0.26	0.32	0.40	0.49	0.58	0.67	0.84	
25	0.05	0.07	0.10	0.16	0.21	0.26	0.31	0.36	0.45	0.57	0.71	0.85	0.98	1.24	
50	0.05	0.08	0.13	0.21	0.30	0.38	0.46	0.54	0.70	0.91	1.15	1.40	1.64	2.10	
75	0.05	0.08	0.14	0.25	0.36	0.47	0.58	0.69	0.91	1.20	1.54	1.87	2.21	2.86	
100	0.05	0.09	0.15	0.28	0.41	0.55	0.68	0.82	1.10	1.46	1.88	2.31	2.73	3.57	
150	0.05	0.09	0.17	0.33	0.50	0.68	0.86	1.05	1.43	1.92	2.51	3.09	3.68	4.85	
200	0.06	0.10	0.18	0.37	0.57	0.79	1.02	1.25	1.72	2.34	3.07	3.81	4.56	6.04	
250	0.06	0.10	0.19	0.40	0.64	0.89	1.16	1.43	1.99	2.72	3.60	4.48	5.37	7.16	
300	0.06	0.10	0.20	0.43	0.69	0.98	1.28	1.60	2.24	3.09	4.09	5.11	6.15	8.23	1
400	0.06	0.11	0.22	0.48	0.80	1.14	1.51	1.90	2.70	3.75	5.01	6.30	7.60	10.24	1
600	0.06	0.12	0.24	0.56	0.96	1.42	1.91	2.43	3.52	4.95	6.67	8.45	10.26	13.94	1
800	0.06	0.12	0.26	0.63	1.10	1.65	2.25	2.89	4.24	6.03	8.17	10.40	12.69	17.35	2
1000	0.06	0.13	0.27	0.69	1.23	1.86	2.55	3.30	4.91	7.02	9.57	12.23	14.96	20.57	2

LS Factors for Construction Sites. *Table from Renard et. al., 1997.*

APPENDIX 2:
Post-Construction Water Balance Performance Standard Spreadsheet

The discharger shall submit with their Notice of Intent (NOI) the following information to demonstrate compliance with the New and Re-Development Water Balance Performance Standard.

Map Instructions

The discharger must submit a small-scale topographic map of the site to show the existing contour elevations, pre- and post-construction drainage divides, and the total length of stream in each watershed area. Recommended scales include 1 in. = 20 ft., 1 in. = 30 ft., 1 in. = 40 ft., or 1 in = 50 ft. The suggested contour interval is usually 1 to 5 feet, depending upon the slope of the terrain. The contour interval may be increased on steep slopes. Other contour intervals and scales may be appropriate given the magnitude of land disturbance.

Spreadsheet Instructions

The intent of the spreadsheet is to help dischargers calculate the project-related increase in runoff volume and select impervious area and runoff reduction credits to reduce the project-related increase in runoff volume to pre-project levels.

The discharger has the option of using the spreadsheet (**Appendix 2.1)** or a more sophisticated, watershed process-based model (e.g. Storm Water Management Model, Hydrological Simulation Program Fortran) to determine the project-related increase in runoff volume.

In* Appendix 4.1**, ***you must complete the worksheet for each land use/soil type combination for each project sub-watershed.

Steps 1 through 9 pertain specifically to the Runoff Volume Calculator:

Step 1: Enter the county where the project is located in cell H3.

Step 2: Enter the soil type in cell H6.

Step 3: Enter the existing pervious (dominant) land use type in cell H7.

Step 4: Enter the proposed pervious (dominant) land use type in cell H8.

Step 5: Enter the total project site area in cell H11 or J11.

Step 6: Enter the sub-watershed area in cell H12 or J12.

Step 7: Enter the existing rooftop area in cell H17 or J17, the existing non-rooftop impervious area in cell H18 or J18, the proposed rooftop area in cell H19 or J19, and the proposed non-rooftop impervious area in cell H20 or J20

Step 8: Work through each of the impervious area reduction credits and claim credits where applicable. Volume that cannot be addressed using non-structural practices must be captured in structural practices and approved by the Regional Water Board.

Step 9: Work through each of the impervious volume reduction credits and claim credits where applicable. Volume that cannot be addressed using non-structural practices must be captured in structural practices and approved by the Regional Water Board.

Non-structural Practices Available for Crediting

- ***Porous Pavement***
- ***Tree Planting***
- ***Downspout Disconnection***
- ***Impervious Area Disconnection***
- ***Green Roof***
- ***Stream Buffer***
- ***Vegetated Swales***
- ***Rain Barrels and Cisterns***
- ***Landscaping Soil Quality***

ED_002781A_00003896-00755

Post-Construction Water Balance Calculator

User may make changes from any cell that is orange or brown in color (similar to the cells to the immediate right). Cells in green are calculated for you.

(Step 1a) If you know the 85th percentile storm event for your location enter it in the box below

(Step 1b) If you can not answer 1a then select the county where the project is located (click on the cell to the right for drop-down): This will determine the average 85th percentile 24 hr. storm event for your site, which will appear under precipitation to left.

SACRAMENTO

(Step 1c) If you would like a more percise value select the location closest to your site. If you do not recgonize any of these locations, leave this drop-down menu at location. The average value for the County will be used.

SACRAMENTO FAA ARPT

Project Information		*Runoff Calculations*		
Project Name:	***Optional***	(Step 2) Indicate the Soil Type (dropdown menu to right):	***Group C Soils***	**Low infiltration. Sandy clay loam. Infiltration rate 0.05 to 0.15 inch/hr when wet.**
Waste Discharge Identification (WDID):	***Optional***	(Step 3) Indicate the existing **dominant** non-built land Use Type (dropdown menu to right):	***Wood & Grass: <50% ground cover***	
Date:	***Optional***	(Step 4) Indicate the proposed **dominant** non-built land Use Type (dropdown menu to right):	***Lawn, Grass, or Pasture covering more than 75% of the open space***	
Sub Drainage Area Name (from map):	***Optional***		**Complete Either**	

Runoff Curve Numbers			**Sq Ft**	**Acres**	**Acres**
Existing Pervious Runoff Curve Number	**82**	*(Step 5) Total Project Site Area:*		**5.00**	**5.00**
Proposed Development Pervious Runoff Curve Number	**74**	*(Step 6) Sub-watershed Area:*		**5.00**	**5.00**
		Percent of total project :	**100%**		

Design Storm		
Based on the County you indicated above, we have included the 85 percentile average 24 hr event - P85 (in)^ for your area.	**0.62**	**in**
The Amount of rainfall needed for runoff to occur (Existing runoff curve number -P from existing RCN (in)^)	**0.44**	**In**
P used for calculations (in) (the greater of the above two criteria)	**0.62**	**In**
^Available at www.cabmphandbooks.com		

(Step 7) Sub-watershed Conditions	**Complete Either**		**Calculated Acres**
Sub-watershed Area (acres)	**Sq Ft**	**Acres**	**5.00**
Existing Rooftop Impervious Coverage		**0**	**0.00**
Existing Non-Rooftop Impervious Coverage		**0**	**0.00**
Proposed Rooftop Impervious Coverage		**0**	**0.00**
Proposed Non-Rooftop Impervious Coverage		**0**	**0.00**

Pre-Project Runoff Volume (cu ft)	**247**	**Cu.Ft.**
Project-Related Runoff Volume Increase w/o credits (cu ft)	**0**	**Cu.Ft.**
Project-Related Volume Increase with Credits (cu ft)	**0**	**Cu.Ft.**

Credits	**Acres**	**Square Feet**
Porous Pavement	**0.00**	**0**
Tree Planting	**0.00**	**0**
Downspout Disconnection	**0.00**	**0**
Impervious Area Disconnection	**0.00**	**0**
Green Roof	**0.00**	**0**
Stream Buffer	**0.00**	**0**
Vegetated Swales	**0.00**	**0**
Subtotal	**0.00**	**0**
Subtotal Runoff Volume Reduction Credit	**0 Cu. Ft.**	

You have achieved your minimum requirements

(Step 9) Impervious Volume Reduction Credits	**Volume (cubic feet)**
Rain Barrels/Cisterns	**0 Cu. Ft.**
Soil Quality	**0 Cu. Ft.**
Subtotal Runoff Volume Reduction	**0 Cu. Ft.**
Total Runoff Volume Reduction Credit	**0 Cu. Ft.**

Porous Pavement Credit Worksheet

Please fill out a porous pavement credit worksheet for each project sub-watershed.

For the PROPOSED Development:

Proposed Porous Pavement	Runoff Reduction*	Fill in either Acres or SqFt In SqFt.	In Acres	Equivalent Acres
Area of **Brick without Grout** on less than 12 inches of base with at least 20% void space over soil	0.45			0.00
Area of **Brick without Grout** on more than 12 inches of base with at least 20% void space over soil	0.90			0.00
Area of **Cobbles** less than 12 inches deep and over soil	0.30			0.00
Area of **Cobbles** less than 12 inches deep and over soil	0.60			0.00
Area of **Reinforced Grass Pavement** on less than 12 inches of base with at least 20% void space over soil	0.45			0.00
Area of **Reinforced Grass Pavement** on at least 12 inches of base with at least 20% void space over soil	0.90			0.00
Area of **Porous Gravel Pavement** on less than 12 inches of base with at least 20% void space over soil	0.38			0.00
Area of **Porous Gravel Pavement** on at least 12 inches of base with at least 20% void space over soil	0.75			0.00
Area of **Poured Porous Concrete or Asphalt Pavement** with less than 4 inches of gravel base (washed stone)	0.40			0.00
Area of **Poured Porous Concrete or Asphalt Pavement** with 4 to 8 inches of gravel base (washed stone)	0.60			0.00
Area of **Poured Porous Concrete or Asphalt Pavement** with 8 to 12 inches of gravel base (washed stone)	0.80			0.00
Area of **Poured Porous Concrete or Asphalt Pavement** with 12 or more inches of gravel base (washed stone)	1.00			0.00

*=1-Rv**

Return to Calculator

**Using Site Design Techniques to meet Development Standards for Stormwater Quality (BASMAA 2003)

**NCDENR Stormwater BMP Manual (2007)

Tree Planting Credit Worksheet

Please fill out a tree canopy credit worksheet for each project sub-watershed.

Tree Canopy Credit Criteria	Number of Trees Planted	Credit (acres)
Number of proposed evergreen trees to be planted (credit = number of trees x 0.005)*	0	0.00
Number of proposed deciduous trees to be planted (credit = number of trees x 0.0025)*		0.00
	Square feet Under Canopy	
Square feet under an existing tree canopy, that will remain on the property, with an average diameter at 4.5 ft above grade (i.e., diameter at breast height or DBH) is LESS than 12 in diameter.		0.00
Square feet under an existing tree canopy that will remain on the property, with an average diameter at 4.5 ft above grade (i.e., diameter at breast height or DBH) is 12 in diameter or GREATER.		0.00
Please describe below how the project will ensure that these trees will be maintained.		

0

Return to Calculator

* credit amount based on credits from Stormwater Quality Design Manual for the Sacramento and South Placer Regions

Downspout Disconnection Credit Worksheet

Please fill out a downspout disconnection credit worksheet for each project subwatershed. If you answer yes to all questions, all rooftop area draining to each downspout will be subtracted from your proposed rooftop impervious coverage.

Downspout Disconnection Credit Criteria					
Do downspouts and any extensions extend at least six feet from a basement and two feet from a crawl space or concrete slab?				○ Yes	◉ No
Is the area of rooftop connecting to each disconnected downspout 600 square feet or less?				○ Yes	◉ No
Is the roof runoff from the design storm event fully contained in a raised bed or planter box or does it drain as sheet flow to a landscaped area large enough to contain the roof runoff from the design storm event?				○ Yes	◉ No
The Stream Buffer and/or Vegetated Swale credits **will not** be taken in this sub-watershed area?				○ Yes	◉ No
Percentage of existing	0.00	Acres	of rooftop surface has disconnected downspouts		
Percentage of the proposed	0.00	Acres	of rooftop surface has disconnected downspouts	50	
				Return to Calculator	

Impervious Area Disconnection Credit Worksheet

Please fill out an impervious area disconnection credit worksheet for each project sub-watershed. If you answer yes to all questions, all non-rooftop impervious surface area will be subtracted from your proposed non-rooftop impervious coverage.

Non-Rooftop Disconnection Credit Criteria	Response
Is the maximum contributing impervious flow path length less than 75 feet or, if equal or greater than 75 feet, is a storage device (e.g. French drain, bioretention area, gravel trench) implemented to achieve the required disconnection length?	◉ Yes ○ No
Is the impervious area to any one discharge location less than 5,000 square feet?	◉ Yes ○ No
The Stream Buffer credit **will not** be taken in this sub-watershed area?	◉ Yes ○ No

Percentage of existing	0.00	Acres non-rooftop surface area disconnected	
Percentage of the proposed	0.00	Acres non-rooftop surface area disconnected	70

Return to Calculator

Green Roof Credit Worksheet

Please fill out a greenroof credit worksheet for each project sub-watershed. If you answer yes to all questions, 70% of the greenroof area will be subtracted from your proposed rooftop impervious coverage.

Green Roof Credit Criteria	Response
Is the roof slope less than 15% or does it have a grid to hold the substrate in place until it forms a thick vegetation mat?	◉ Yes ○ No
Has a professional engineer assessed the necessary load reserves and designed a roof structure to meet state and local codes?	◉ Yes ○ No
Is the irrigation needed for plant establishment and/or to sustain the green roof during extended dry periods, is the source from stored, recycled, reclaimed, or reused water?	◉ Yes ○ No
Percentage of existing 0.00 Acres rooftop surface area in greenroof	
Percentage of the proposed 0.00 Acres rooftop surface area in greenroof	
	Return to Calculator

Stream Buffer Credit Worksheet

Please fill out a stream buffer credit worksheet for each project sub-watershed. If you answer yes to all questions, you may subtract all impervious surface draining to each stream buffer that has not been addressed using the Downspout and/or Impervious Area Disconnection credits.

Stream Buffer Credit Criteria				Response
Does runoff enter the floodprone width* or within 500 feet (whichever is larger) of a stream channel as sheet flow**?				○ Yes ◉ No
Is the contributing overland slope 5% or less, or if greater than 5%, is a level spreader used?				○ Yes ◉ No
Is the buffer area protected from vehicle or other traffic barriers to reduce compaction?				○ Yes ◉ No
Will the stream buffer be maintained in an ungraded and uncompacted condition and will the vegetation be maintained in a natural condition?				○ Yes ◉ No
Percentage of existing	0.00	Acres	impervious surface area draining into a stream buffer:	
Percentage of the proposed	0.00	Acres	impervious surface area that will drain into a stream buffer:	
Please describe below how the project will ensure that the buffer areas will remain in ungraded and uncompacted condition and that the vegetation will be maintained in a natural condition.				

Return to Calculator

* floodprone width is the width at twice the bankfull depth.
** the maximum contributing length shall be 75 feet for impervious area

Vegetated Swale Credit Worksheet

Please fill out a vegetated swale worksheet for each project subwatershed. If you answer yes to all questions, you may subtract all impervious surface draining to each stream buffer that has not been addressed using the Downspout Disconnection credit.

Vegetated Swale Credit Criteria

Have all vegetated swales been designed in accordance with Treatment Control BMP 30 (TC-30 - Vegetated Swale) from the California Stormwater BMP Handbook, New Development and Redevelopment (available at www.cabmphandbooks.com)?	○ Yes ◉ No
Is the maximum flow velocity for runoff from the design storm event less than or equal to 1.0 foot per second?	○ Yes ◉ No

Percentage of existing	0.00	Acres of impervious area draining to a vegetated swale	
Percentage of the proposed	0.00	Acres of impervious area draining to a vegetated swale	

Return to Calculator

Rain Barrel/Cistern Credit Worksheet

Please fill out a rain barrel/cistern worksheet for each project sub-watershed.

Rain Barrel/Cistern Credit Criteria	Response
Total number of rain barrel(s)/cisterns	
Average capacity of rain barrel(s)/cistern(s) (in gallons)	
Total capacity rain barrel(s)/cistern(s) (in cu ft) [1]	0

[1] accounts for 10% loss

Return to Calculator

Please fill out a soil quality worksheet for each project sub-watershed.

	Response
Will the landscaped area be lined with an impervious membrane?	
Will the soils used for landscaping meet the ideal bulk densities listed in Table 1 below? [1]	○ Yes ◉ No
If you answered yes to the question above, and you know the area-weighted bulk density within the top 12 inches for soils used for landscaping (in g/cm^3)* , fill in the cell to the right and skip to cell G11. If not select from the drop-down menu in G10.	1.3
If you answered yes to the question above, but you do not know the exact bulk density, which of the soil types in the drop down menu to the right best describes the top 12 inches for soils used for landscaping (in g/cm^3).	Sandy loams, loams
What is the average depth of your landscaped soil media meeting the above criteria (inches)?	12
What is the total area of the landscaped areas meeting the above criteria (in acres)?	2.97

Return to Calculator

Table 1

Sands, loamy sands	<1.6
Sandy loams, loams	<1.4
Sandy clay loams, loams, clay loams	<1.4
Silts, silt loams	<1.3
Silt loams, silty clay loams	<1.1
Sandy clays, silty clays, some clay loams (35-45% clay)	<1.1
Clays (>45% clay)	<1.1

[1] USDA NRCS. "Soil Quality Urban Technical Note No.2-Urban Soil Compaction". March 2000. http://soils.usda.gov/sqi/management/files/sq_utn_2.pdf

* To determine how to calculate density see: http://www.globe.gov/tctg/bulkden.pdf?sectionID=94

Porosity (%) 50.94%

Mineral grains in many soils are mainly quartz and feldspar, so 2.65 a good average for particle density. To determine percent porosity, use the formula: Porosity (%) = (1-Bulk Density/2.65) X 100

APPENDIX 3
Bioassessment Monitoring Guidelines

Bioassessment monitoring is required for projects that meet all of the following criteria:

1. The project is rated Risk Level 3 or LUP Type 3
2. The project directly discharges runoff to a freshwater wadeable stream (or streams) that is either: (a) listed by the State Water Board or USEPA as impaired due to sediment, and/or (b) tributary to any downstream water body that is listed for sediment; and/or have the beneficial use SPAWN & COLD & MIGRATORY
3. Total project-related ground disturbance exceeds 30 acres.

For all such projects, the discharger shall conduct bioassessment monitoring, as described in this section, to assess the effect of the project on the biological integrity of receiving waters.
Bioassessment shall include:

1. The collection and reporting of specified instream biological data
2. The collection and reporting of specified instream physical habitat data

Bioassessment Exception

If a site qualifies for bioassessment, but construction commences out of an index period for the site location, the discharger shall:

1. Receive Regional Water Board approval for the sampling exception
2. Make a check payable to: Cal State Chico Foundation (SWAMP Bank Account) or San Jose State Foundation (SWAMP Bank Account) and include the WDID# on the check for the amount calculated for the exempted project.
3. Send a copy of the check to the Regional Water Board office for the site's region
4. Invest **7,500.00 X The number of samples required** into the SWAMP program as compensation (upon Regional Water Board approval).
5. Conduct bioassessment monitoring, as described in Appendix 4
6. Include the collection and reporting of specified instream biological data and physical habitat
7. Use the bioassessment sample collection and Quality Assurance & Quality Control (QA/QC) protocols developed by the State of California's Surface Water Ambient Monitoring Program (SWAMP)

Site Locations and Frequency

Macroinvertebrate samples shall be collected both before ground disturbance is initiated and after the project is completed. The "after" sample(s) shall be collected after at least one winter season resulting in surface runoff has transpired after project-related ground disturbance has ceased. "Before" and "after" samples shall be collected both upstream and downstream of the project's

discharge. Upstream samples should be taken immediately before the sites outfall and downstream samples should be taken immediately after the outfall (when safe to collect the samples). Samples should be collected for each freshwater wadeable stream that is listed as impaired due to sediment, or tributary to a water body that is listed for sediment. Habitat assessment data shall be collected concurrently with all required macroinvertebrate samples.

Index Period (Timing of Sample Collection)
Macroinvertebrate sampling shall be conducted during the time of year (i.e., the "index period") most appropriate for bioassessment sampling, depending on ecoregion. This map is posted on the State Water Board's Website: http://www.waterboards.ca.gov/water_issues/programs/stormwater/construction.shtml

Field Methods for Macroinvertebrate Collections
In collecting macroinvertebrate samples, the discharger shall use the "Reachwide Benthos (Multi-habitat) Procedure" specified in *Standard Operating Procedures for Collecting Benthic Macroinvertebrate Samples and Associated Physical and Chemical Data for Ambient Bioassessments in California* (Ode 2007).[1]

Physical - Habitat Assessment Methods
The discharger shall conduct, concurrently with all required macroinvertebrate collections, the "Full" suite of physical habitat characterization measurements as specified in *Standard Operating Procedures for Collecting Benthic Macroinvertebrate Samples and Associated Physical and Chemical Data for Ambient Bioassessments in California* (Ode 2007), and as summarized in the Surface Water Ambient Monitoring Program's *Stream Habitat Characterization Form — Full Version.*

Laboratory Methods
Macroinvertebrates shall be identified and classified according to the Standard Taxonomic Effort (STE) Level I of the Southwestern Association of Freshwater Invertebrate Taxonomists (SAFIT),[2] and using a fixed-count of 600 organisms per sample.

Quality Assurance
The discharger or its consultant(s) shall have and follow a quality assurance (QA) plan that covers the required bioassessment monitoring. The QA plan shall include, or be supplemented to include, a specific requirement for external QA checks (i.e., verification of taxonomic identifications and correction of data where

---

[1] This document is available on the Internet at: ~~http://www.swrcb.ca.gov/swamp/docs/phab_sopr6.pdf~~. http://swamp.mpsl.mlml.calstate.edu/wp-content/uploads/2009/04/swamp_sop_bioassessment_collection_020107.pdf.

[2] The current SAFIT STEs (28 November 2006) list requirements for both the Level I and Level II taxonomic effort, and are located at: ~~http://www.swrcb.ca.gov/swamp/docs/safit/ste_list.pdf~~ http://www.safit.org/Docs/ste_list.pdf. When new editions are published by SAFIT, they will supersede all previous editions. All editions will be posted at the State Water Board's SWAMP website.

errors are identified). External QA checks shall be performed on one of the discharger's macroinvertebrate samples collected per calendar year, or ten percent of the samples per year (whichever is greater). QA samples shall be randomly selected. The external QA checks shall be paid for by the discharger, and performed by the California Department of Fish and Game's Aquatic Bioassessment Laboratory. An alternate laboratory with equivalent or better expertise and performance may be used if approved in writing by State Water Board staff.

Sample Preservation and Archiving

The original sample material shall be stored in 70 percent ethanol and retained by the discharger until: 1) all QA analyses specified herein and in the relevant QA plan are completed; and 2) any data corrections and/or re-analyses recommended by the external QA laboratory have been implemented. The remaining subsampled material shall be stored in 70 percent ethanol and retained until completeness checks have been performed according to the relevant QA plan. The identified organisms shall be stored in 70 percent ethanol, in separate glass vials for each final ID taxon. (For example, a sample with 45 identified taxa would be archived in a minimum of 45 vials, each containing all individuals of the identified taxon.) Each of the vials containing identified organisms shall be labeled with taxonomic information (i.e., taxon name, organism count) and collection information (i.e., site name/site code, waterbody name, date collected, method of collection). The identified organisms shall be archived (i.e., retained) by the discharger for a period of not less than three years from the date that all QA steps are completed, and shall be checked at least once per year and "topped off" with ethanol to prevent desiccation. The identified organisms shall be relinquished to the State Water Board upon request by any State Water Board staff.

Data Submittal

The macroinvertebrate results (i.e., taxonomic identifications consistent with the specified SAFIT STEs, and number of organisms within each taxa) shall be submitted to the State Water Board in electronic format. The State Water Board's Surface Water Ambient Monitoring Program (SWAMP) is currently developing standardized formats for reporting bioassessment data. All bioassessment data collected after those formats become available shall be submitted using the SWAMP formats. Until those formats are available, the biological data shall be submitted in MS-Excel (or equivalent) format.[3]

The physical/habitat data shall be reported using the standard format titled *SWAMP Stream Habitat Characterization Form — Full Version.*[4]

---

[3] Any version of Excel, 2000 or later, may be used.

[4] Available at: http://www.waterboards.ca.gov/water_issues/programs/swamp/docs/reports/fieldforms_fullversion052908.pdf

Invasive Species Prevention

In conducting the required bioassessment monitoring, the discharger and its consultants shall take precautions to prevent the introduction or spread of aquatic invasive species. At minimum, the discharger and its consultants shall follow the recommendations of the California Department of Fish and Game to minimize the introduction or spread of the New Zealand mudsnail.[5]

[5] Instructions for controlling the spread of NZ mudsnails, including decontamination methods, can be found at: http://www.dfg.ca.gov/invasives/mudsnail/
More information on AIS More information on AIS
http://www.waterboards.ca.gov/water_issues/programs/swamp/ais/

Appendix 4 Sediment TMDLs

Implemented Sediment TMDLs in California. Construction was listed as a source in all fo these TMDLs in relation to road construction. Although construction was mentioned as a source, it was not given a specific allocation amount. The closest allocation amount would be for the road activity management WLA. **Implementation Phase** – Adoption process by the Regional Board, the State Water Resources Control Board, the Office of Administrative Law, and the US Environmental Protection Agency completed and TMDL being implemented.

A. Region	Type	Name	Pollutant Stressor	Potential Sources	TMDL Completion Date	Watershed Acres	WLA tons mi^2 yr
1 R1.epa.albionfinaltmdl	R	Albion River	Sedimentation	Road Construction	2001	43 acres	See A (table 6)

B Region	Type	Name	Pollutant Stressor	Potential Sources	TMDL Completion Date	Watershed Acres	WLA tons mi^2 yr
1 R1.epa.EelR-middle.mainSed.temp	R	Middle Main Eel River and Tributaries (from Dos Rios to the South Fork)	Sedimentation Road	Construction	2005-2006 521	mi^2	100

C Region	Type	Name	Pollutant Stressor	Potential Sources	TMDL Completion Date	Watershed Acres	WLA tons mi^2 yr
1 R1.epa.EelRsouth.sed.temp	R	South Fork Eel River	Sedimentation	Road Construction	12 1999	See chart	473

D Region	Type	Name	Pollutant Stressor	Potential Sources	TMDL Completion Date	Watershed Acres	WLA tons mi^2 yr
1 R1.epa.bigfinaltmdl	R Big	River	Sedimentation	Road Construction	12 2001	181 mi^2 watershed drainage	TMDL = loading capacity = nonpoint sources + background =

ED_002781A_00003896-00770

							393 t mi2 yr

E Region	Type	Name	Pollutant Stressor	Potential Sources	TMDL Completion Date	Watershed Acres	WLA tons mi^2 yr
1 R1.epa.EelR-lower.Sed.temp-121807-signed	R	Lower Eel River	Sedimentation	Road Construction	12 2007	300 square-mile watershed	898

F Region	Type	Name	Pollutant Stressor	Potential Sources	TMDL Completion Date	Watershed Acres	WLA tons mi^2 yr
1 R1.epa.EelR-middle.Sed.temp-	R	Middle Fork Eel River	Sedimentation	Road Construction	12 2003	753 mi^2 (approx. 482,000 acres)	82

G Region	Type	Name	Pollutant Stressor	Potential Sources	TMDL Completion Date	Watershed Acres Mi^2	WLA tons mi^2 yr
1 R1.epa.EelRnorth-Sed.temp.final-121807-signed	R	North Fork Eel River	Sedimentation	Road Construction	12 30 2002	289 (180,020 acres)	20

H Region	Type	Name	Pollutant Stressor	Potential Sources	TMDL Completion Date	Watershed Acres Mi^2	WLA tons mi^2 yr
1 R1.epa.EelR-upper.mainSed.temp-	R	Upper Main Eel River and Tributaries (including Tomki Creek, Outlet Creek and Lake Pillsbury)	Sedimentation	Road Construction	12 29 2004	688 (approx. 440,384 acres)	14

ED_002781A_00003896-00771

I Region	Type	Name	Pollutant Stressor	Potential Sources	TMDL Completion Date	Watershed Acres	WLA tons mi^2 yr
1 R1.epa.gualalafinaltmdl	R	Gualala River	Sedimentation	Road Construction	Not sure	300 (191,145 acres)	7

J Region	Type	Name	Pollutant Stressor	Potential Sources	TMDL Completion Date	Watershed Acres mi^2	WLA tons mi^2 yr
1 R1.epa.Mad-sed.turbidity	R	Mad River	Sedimentation	Road Construction	12 21 2007	480	174

K Region	Type	Name	Pollutant Stressor	Potential Sources	TMDL Completion Date	Watershed Acres mi^2	WLA tons mi^2 yr
1 R1.epa.mattole.sediment	R	Mattole River	Sedimentation	Road Construction	12 30 2003	296	27 or 520+27 = 547

L Region	Type	Name	Pollutant Stressor	Potential Sources	TMDL Completion Date	Watershed Acres mi^2	WLA tons mi^2 yr
1 R1.epa.navarro.sed.temp	R	Navarro River	Sedimentation	Road Construction	Not sure	315 (201,600 acres).	50

M Region	Type	Name	Pollutant Stressor	Potential Sources	TMDL Completion Date	Watershed Acres mi^2	WLA tons mi^2 yr
1 R1.epa.noyo.sediment	R	Noyo River	Sedimentation	Road Construction	12 16 1999	113 (72,323 acres)	68 (three areas measured) Table 16 in the TMDL

N Region	Type	Name	Pollutant Stressor	Potential Sources	TMDL Completion Date	Watershed Acres mi^2	WLA tons mi^2 yr
1 R1.epa.RedwoodCk.sed	Cr	Redwood Creek	Sedimentation	Road Construction	12 30 1998	278	1900 Total allocation

O Region	Type	Name	Pollutant Stressor	Potential Sources	TMDL Completion Date	Watershed Acres mi^2	WLA – Roads tons mi^2 yr
1 R1.epa.tenmile.sed	R	Ten Mile River	Sedimentation	Road Construction	2000	120	9

P Region	Type	Name	Pollutant Stressor	Potential Sources	TMDL Completion Date	Watershed Acres mi^2	WLA management tons mi^2 yr
1 R1.epa.trinity.sed	R	Trinity River	Sedimentation	Road Construction	12 20 2001	2000 of 3000 covered in this TMDL	See rows below
1	Cr	Horse Linto Creek	Sedimentation	Road Construction	12 20 2001	64	528
1	Cr	Mill creek and Tish Tang	Sedimentation	Road Construction	12 20 2001	39	210
1	Cr	Willow Creek	Sedimentation	Road Construction	12 20 2001	43	94
1	Cr	Campbell Creek and Supply Creek	Sedimentation	Road Construction	12 20 2001	11	1961
1	Cr	Lower Mainstem and Coon Creek	Sedimentation	Road Construction	12 20 2001	32	63
1 R		Reference Subwatershed [1]	Sedimentation	Road Construction	12 20 2001	434	24
1	Cr	Canyon Creek	Sedimentation	Road	12 20 2001	64	326

ED_002781A_00003896-00773

				Construction			
1 R		Upper Tributaries[2]	Sedimentation	Road Construction	12 20 2001	72	67
1 R		Middle Tributaries[3]	Sedimentation	Road Construction	12 20 2001	54	53
1 R		Lower Tributaries[4]	Sedimentation	Road Construction	12 20 2001	96	55
1	Cr	Weaver and Rush Creeks	Sedimentation	Road Construction	12 20 2001	72	169
1 Cr		Deadwood Creek Hoadley Gulch Poker Bar	Sedimentation	Road Construction	12 20 2001	47	68
1	L	Lewiston Lake	Sedimentation	Road Construction	12 20 2001	25	49
1 Cr		Grassvalley Creek	Sedimentation	Road Construction	12 20 2001	37	44
1	Cr	Indian Creek	Sedimentation	Road Construction	12 20 2001	34	81
1	Cr	Reading and Browns Creek	Sedimentation	Road Construction	12 20 2001	104	66
1 Cr		Reference Subwatersheds[5]	Sedimentation	Road Construction	12 20 2001	235	281
1	L, Cr	Westside tributaries[6]	Sedimentation	Road Construction	12 20 2001	93	105
1 R,	Cr, G	Upper trinity[7]	Sedimentation	Road Construction	12 20 2001	161	690
1 R,	Cr, G	East Fork Tributaries[8]	Sedimentation	Road Construction	12 20 2001	115	65
1	R, L	Eastside Tributaries[9]	Sedimentation	Road Construction	12 20 2001	89	60

1 New River, Big French, Manzanita, North Fork, East Fork, North Fork
2 Dutch, Soldier, Oregon gulch, Conner Creek
3 Big Bar, Prairie Creek, Little French Creek
4 Swede, Italian, Canadian, Cedar Flat, Mill, McDonald, Hennessy, Quimby, Hawkins, Sharber
5 Stuarts Fork, Swift Creek, Coffee Creek
6 Stuart Arm, Stoney Creek, Mule Creek, East Fork, Stuart Fork, West Side Trinity Lake, Hatchet Creek, Buckeye Creek,
7 Upper Trinity River, Tangle Blue, Sunflower, Graves, Bear Upper Trinity Mainstream, Ramshorn Creek, Ripple Creek, Minnehaha Creek, Snowslide Gulch, Scorpion Creek
8 East Fork Trinity, Cedar Creek, Squirrel Gulch

ED_002781A_00003896-00774

9 East Side Tributaries, Trinity Lake

Q Region	Type	Name	Pollutant Stressor	Potential Sources	TMDL Completion Date	Watershed Acres mi^2	WLA tons mi^2 yr
1 R1.epa.trinity.so.sed	R, Cr	South Fork Trinity River and Hayfork Creek	Sedimentation	Road Construction	12 1998	Not given, 19 miles long	33 (road total)

R Region	Type	Name	Pollutant Stressor	Potential Sources	TMDL Completion Date	Watershed Acres mi^2	WLA tons mi^2 yr
1 R1.epa.vanduzen.sed	R, Cr	Van Duzen River and Yager Creek	Sedimentation	Various	12 16 1999	429	1353 total allocation
1		Upper Basin	Sedimentation	Road Construction			7
1		Middle Basin	Sedimentation	Road Construction			22
1		Lower Basin	Sedimentation	Road Construction			20

S Region	Type	Name	Pollutant Stressor	Potential Sources	TMDL Completion Date	Watershed Acres mi^2	WLA tons mi^2 yr
6 R6.blackwood.sed Cr		Blackwood Creek (Placer County)	Bedded Sediment	Various	9 2007	11	17272 total

T Region	Type	Name	Pollutant Stressor	Potential Sources	TMDL Completion Date	Watershed Acres mi^2	WLA tons mi^2 yr
6 R6.SquawCk.sed R		Squaw Creek (Placer County)	Sedimentation /controllable sources	Various – basin plan amendment	4 13 2006	8.2	10,900

ED_002781A_00003896-00775

Adopted TMDLs for Construction Sediment Sources

Region	Type	Name	Pollutant Stressor	Potential Sources	**TMDL Completion Date**	**Watershed Area** mi^2	Waste load Allocation tons mi^2 yr
8 R		Newport Bay San Diego Creek Watershed	Sedimentation	Construction Land Development	1999 2.24	(1432 acres)	125,000 tons per Year (no more than 13,000 tons per year from construction sites)

ED_002781A_00003896-00776

Appendix 4 Non Sediment TMDLs

Region 1 Lost River-DIN and CBOD

Region 1 Source: Cal Trans Construction TMDL Completion Date: 12 30 2008 TMDL Type: River, Lake Watershed Area= 2996 mi^2	**Pollutant Stressors/WLA**	
	Dissolved inorganic nitrogen (DIN) (metric tons/yr)	**Carbonaceous biochemical oxygen demand (CBOD) (metric tons/yr)**
Lost River from the Oregon border to Tule Lake	.1 .2	
Tule Lake Refuge	.1	.2
Lower Klamath Refuge	.1	.2

Region 2 San Francisco Bay-Mercury

Region 2 Source:Non-Urban Stormwater Runoff TMDL Type: Bay	**Name**	**Pollutant Stressor/WLA**	**TMDL Completion Date**
	San Francisco Bay	Mercury 25 kg/year	08 09 2006

ED_002781A_00003896-00777

Region 4 Machado Lake Nutrients - Resolution No. 2008-006 (Effective Date - March 11, 2009)

General Construction Stormwater Permit WLAs	Years After Effective Date	Total Phosphorus (mg/L)	Total Nitrogen (TKN + NO3-N + NO2-N) (mg/L)
Interim WLAs[1]	At Effective Date	1.25	3.50
Interim WLAs[2] 5	years	1.25	2.45
Final WLAs[2]	9.5 years	0.10	1.00

[1] The compliance points for effective date interim WLAs are measured in the lake.
[2] No compliance points are specified for general construction stormwater permits for the year 5 interim WLAs and final WLAs

Region 4 Ballona Creek-Metals and Selenium – Resolution No. 2007-015 (Effective Date October 29, 2008)

Wet Weather WLAs

Region 4 Source: NPDES General Construction TMDL Completion Date: 10 29 2008 TMDL Type: Creek	Copper (Cu)		Lead (Pb)		Selenium (Se)		Zinc (Zn)	
	g/day	g/day/acre	g/day	g/day/acre	g/day	g/day/acre	g/day	g/day/acre
Ballona Creek	4.94E-07 x Daily storm volume (L)	2.20E-10 x Daily storm volume (L)	1.62E-06 x Daily storm volume (L)	7.20E-10 x Daily storm volume (L)	1.37E-07 x Daily storm volume (L)	6.10E-11 x Daily storm volume (L)	3.27E-06 x Daily storm volume (L)	1.45E-09 x Daily storm volume (L)

ED_002781A_00003896-00778

Wet-weather WLA Implementation

- Within seven years of the effective date of the TMDL, the construction industry will submit the results of BMP effectiveness studies to determine BMPs that will achieve compliance with the final waste load allocations assigned to construction storm water permittees.
- Regional Board staff will bring the recommended BMPs before the Regional Board for consideration within eight years of the effective date of the TMDL.
- General construction storm water permittees will be considered in compliance with final waste load allocations if they implement these Regional Board approved BMPs. All permittees must implement the approved BMPs within nine years of the effective date of the TMDL. If no effectiveness studies are conducted and no BMPs are approved by the Regional Board within eight years of the effective date of the TMDL, each general construction storm water permit holder will be subject to site-specific BMPs and monitoring requirements to demonstrate compliance with final waste load allocations.

Dry-weather WLAs

A waste load allocation of zero is assigned to all general construction storm water permits during dry weather.

Dry-weather WLA Implementation

Non-storm water flows authorized by the General Permit for Storm Water Discharges Associated with Construction Activity (Water Quality Order No. 99-08 DWQ), or any successor order, are exempt from the dry-weather waste load allocation equal to zero as long as they comply with the provisions of sections C.3 and A.9 of the Order No. 99-08 DWQ, which state that these authorized non-storm discharges shall be:

(1) infeasible to eliminate
(2) comply with BMPs as described in the Storm Water Pollution Prevention Plan prepared by the permittee, and
(3) not cause or contribute to a violation of water quality standards, or comparable provisions in any successor order.

Unauthorized non-storm water flows are already prohibited by Order No. 99-08 DWQ.

ED_002781A_00003896-00779

Region 4 Los Angeles River and Tributaries-Metals– Resolution No. 2007-014
(Effective Date October 29, 2008)

Wet Weather WLAs

	Cadmium (Cd)		Copper (Cu)		Lead (Pb)		Zinc (Zn)	
	kg/day g/day/acre		kg/day g/day/acre		kg/day g/day/acre		kg/day g/day/acre	
5.9x10	$^{-11}$ x Daily storm volume (L)	7.6×10^{-12} x Daily storm volume (L)	3.2×10^{-10} x Daily storm volume (L)	4.2×10^{-11} x Daily storm volume (L)	1.2×10^{-9} x Daily storm volume (L)	1.5×10^{-10} x Daily storm volume (L)	3.01×10^{-9} x Daily storm volume (L)	3.9×10^{-10} x Daily storm volume (L)

Wet-weather WLA Implementation

- Within seven years of the effective date of the TMDL, the construction industry will submit the results of BMP effectiveness studies to determine BMPs that will achieve compliance with the final waste load allocations assigned to construction storm water permittees.
- Regional Board staff will bring the recommended BMPs before the Regional Board for consideration within eight years of the effective date of the TMDL.
- General construction storm water permittees will be considered in compliance with final waste load allocations if they implement these Regional Board approved BMPs. All permittees must implement the approved BMPs within nine years of the effective date of the TMDL. If no effectiveness studies are conducted and no BMPs are approved by the Regional Board within eight years of the effective date of the TMDL, each general construction storm water permit holder will be subject to site-specific BMPs and monitoring requirements to demonstrate compliance with final waste load allocations.

Dry-weather WLAs

A waste load allocation of zero is assigned to all general construction storm water permits during dry weather.

Dry-weather WLA Implementation

Non-storm water flows authorized by the General Permit for Storm Water Discharges Associated with Construction Activity (Water Quality Order No. 99-08 DWQ), or any successor order, are exempt from the dry-weather waste load allocation equal to zero as

ED_002781A_00003896-00780

long as they comply with the provisions of sections C.3 and A.9 of the Order No. 99-08 DWQ, which state that these authorized non-storm discharges shall be:

(1) infeasible to eliminate
(2) comply with BMPs as described in the Storm Water Pollution Prevention Plan prepared by the permittee, and
(3) not cause or contribute to a violation of water quality standards, or comparable provisions in any successor order.

Unauthorized non-storm water flows are already prohibited by Order No. 99-08 DWQ.

Region 4 Calleguas Creek Metals TMDL – Resolution No. 2006-012 (Effective Date - March 26, 2007)

Interim Limits and Final WLAs for Total Recoverable Copper, Nickel, and Selenium
Interim limits and waste load allocations are applied to receiving water.

A. Interim Limits

Constituents	Calleguas and Conejo Creek			Revolon Slough		
	Dry CMC (ug/L)	Dry CCC (ug/L)	Wet CMC (ug/L)	Dry CMC (ug/L)	Dry CCC (ug/L)	Wet CMC (ug/L)
Copper*	23	19	204	23	19	204
Nickel	15	13	(a)	15	13	(a)
Selenium	(b)	(b)	(b)	14	13	(a)

(a) The current loads do not exceed the TMDL under wet conditions; interim limits are not required.
(b) Selenium allocations have not been developed for this reach as it is not on the 303(d) list.
(c) Attainment of interim limits will be evaluated in consideration of background loading data, if available.

B. Final WLAs for Total Recoverable Copper, Nickel, and Selenium

Dry-Weather WLAs in Water Column

ED_002781A_00003896-00781

Flow Range	Calleguas and Conejo Creek			Revolon Slough		
	Low Flow	Average Flow	Elevated Flow	Low Flow	Average Flow	Elevated Flow
Copper1 (lbs/day)	0.04*WER - 0.02	0.12*WER - 0.02	0.18*WER - 0.03	0.03*WER - 0.01	0.06*WER - 0.03	0.13*WER - 0.02
Nickel (lbs/day)	0.100	0.120	0.440	0.050	0.069	0.116
Selenium (lbs/day)	(a)	(a)	(a)	0.004	0.003	0.004

[1] If site-specific WERs are approved by the Regional Board, TMDL waste load allocations shall be implemented in accordance with the approved WERs using the equations set forth above. Regardless of the final WERs, total copper loading shall not exceed current loading.

(a) Selenium allocations have not been developed for this reach as it is not on the 303(d) list.

Wet-Weather WLAs in Water Column

Constituent	Calleguas Creek	Revolon Slough
Copper[1] (lbs/day)	(0.00054*Q^2*0.032*Q - 0.17)*WER - 0.06	(0.0002*Q2+0.0005*Q)*WER
Nickel[2] (lbs/day)	0.014*Q^2+0.82*Q	0.027*Q^2+0.47*Q
Selenium[2] (lbs/day)	(a)	0.027*Q^2+0.47*Q

[1] If site-specific WERs are approved by the Regional Board, TMDL waste load allocations shall be implemented in accordance with the approved WERs using the equations set forth above. Regardless of the final WERs, total copper loading shall not exceed current loading.

[2] Current loads do not exceed loading capacity during wet weather. Sum of all loads cannot exceed loads presented in the table

(a) Selenium allocations have not been developed for this reach as it is not on the 303(d) list.

Q: Daily storm volume.

Interim Limits and Final WLAs for Mercury in Suspended Sediment

ED_002781A_00003896-00782

Flow Range	Calleguas Creek		Revolon Slough	
	Interim (lbs/yr)	Final (lbs/yr)	Interim (lbs/yr)	Final (lbs/yr)
0-15,000 MGY	3.3	0.4	1.7	0.1
15,000-25,000 MGY	10.5	1.6	4	0.7
Above 25,000 MGY	64.6	9.3	10.2	1.8

MGY: million gallons per year.

In accordance with current practice, a group concentration-based WLA has been developed for all permitted stormwater discharges, including municipal separate storm sewer systems (MS4s), Caltrans, general industrial and construction stormwater permits, and Naval Air Weapons Station Point Mugu. Dischargers will have a required 25%, 50% and 100% reduction in the difference between the current loadings and the load allocations at 5, 10 and 15 years after the effective date, respectively. Achievement of required reductions will be evaluated based on progress towards BMP implementation as outlined in the urban water quality management plans (UWQMPs). If the interim reductions are not met, the dischargers will submit a report to the Executive Officer detailing why the reductions were not met and the steps that will be taken to meet the required reductions.

Region 4 Calleguas Creek-OC Pesticides, PCBs, and Siltation (Resolution 2005-010)
Effective Date - March 24, 2006

Interim Requirements

Region 4 Calleguas Creek Source: Minor NPDES point sources/WDRs TMDL Completion Date: 3 24 2006 TMDL Type:Creek	**Pollutant Stressor**	**WLA Daily Max (µg/L)**	**WLA Monthly Ave (µg/L)**
	Chlordane 1.2		0.59
	4,4-DDD 1.7		0.84
	4,4-DDE 1.2		0.59
	4,4-DDT 1.2		0.59
	Dieldrin 0.28		0.14
	PCB's 0.34		0.17
	Toxaphene 0.33		0.16

ED_002781A_00003896-00783

Region 4 Calleguas Creek-Calleguas Creek Toxicicity (Resolution 2005-009)
Effective Date - March 24, 2006

Minor sources include NPDES permittees other than POTWs and MS4s, discharging to the Calleguas Creek Watershed. A wasteload of 1.0 TUc is allocated to the minor point sources discharging to the Calleguas Creek Watershed. Additionally, the following wasteloads for chlorpyrifos and diazinon are established. Final WLAs apply as of March 24, 2006.

Chlorpyrifos WLAs, ug/L
Final WLA
(4 day)
0.014
Diazinon WLAs, ug/L
Final WLA
Acute and Chronic
0.10

Region 4 Calleguas Creek-Salts (Resolution 2007-016)
Effective Date – December 2, 2008

Final Dry Weather Pollutant WLA (mg/L)					
Region 4 Calleaguas Creek Source Permitted Stormwater Dischargers TMDL Completion Date: 12 2 2008 TMDL Type:Creek	**Critical Condition Flow Rate (mgd)**	**Chloride (lb/day)**	**TDS (lb/day)**	**Sulfate (lb/day)**	**Boron (lb/day)**
Simi	1.39	1738 9849 2897 12			
Las Posas	0.13	157 887 261 N/A			
Conejo	1.26	1576 8931 2627 N/A			
Camarillo	0.06	72	406 119 N/A		
Pleasant Valley (Calleguas)	0.12	150 850 250 N/A			
Pleasant Valley (Revolon)	0.25	314	1778	523	2
Dry Weather Interim Pollutant WLA (mg/L)					
	Chloride (mg/L)	**TDS (mg/L)**	**Sulfate (mg/L)**	**Boron (mg/L)**	

Simi 230.0		1720.0	1289.0	1.3
Las Posas	230	1720	1289	1.3
Conejo 230		1720	1289	1.3
Camarillo 230		1720	1289	1.3
Pleasant Valley (Calleguas)	230	1720	1289	1.3
Pleasant Valley (Revolon)	230	1720	1289	1.3

- Dry- weather waste load allocations apply in the receiving water at the base of each subwatershed. Dry weather allocations apply when instream flow rates are below the 86th percentile flow and there has been no measurable precipitation in the previous 24 hours.
- Because wet weather flows transport a large mass of salts at low concentrations, these dischargers meet water quality objectives during wet weather. No wet weather allocations are assigned.

Ballona Creek Toxic Pollutants (Resolution No. 2005-008)
Effective Date - January 11, 2006

Each storm water permittee enrolled under the general construction or industrial storm water permits will receive an individual waste load allocation on a per acre basis, based on the acreage of their facility.

Metals per Acre WLAs for Individual General Construction or Industrial Storm Water Permittees (g/yr/ac)

Cadmium	Copper	Lead	Silver	Zinc
0.1	3 4 0.1			13

Organics per Acre WLAs for Individual General Construction or Industrial Storm Water Permittees (mg/yr/ac)

Chlordane	DDTs	Total PCBs	Total PAHs
0.04	0.14	2	350

Waste load allocations will be incorporated into the State Board general permit upon renewal or into a watershed spec ific general construction storm water permit developed by the Regional Board.

Within seven years of the effective date of the TMDL, the construction industry will submit the results of BMP effectiveness studies to determine BMPs that will achieve compliance with the waste load allocations assigned to construction storm water permittees. Regional Board staff will bring the recommended BMPs before the Regional Board for consideration within eight years of the

ED_002781A_00003896-00785

effective date of the TMDL. General construction storm water permittees will be considered in compliance with waste load allocations if they implement these Regional Board approved BMPs.

All general construction permittees must implement the approved BMPs within nine years of the effective date of the TMDL. If no effectiveness studies are conducted and no BMPs are approved by the Regional Board within eight years of the effective date of the TMDL, each general construction storm water permit holder will be subject to site-specific BMPs and monitoring requirements to demonstrate compliance with waste load allocations.

Region 4 Marina Del Rey Harbor Toxic Pollutants TMDL (Resolution No. 2005-012)
Effective Date March 22, 2006

Each storm water permittee enrolled under the general construction or industrial storm water permits will receive an individual waste load allocation on a per acre basis, based on the acreage of their facility.

Metals per Acre WLAs for Individual General Construction or Industrial Storm Water Permittees (g/yr/ac)

Copper	Lead	Zinc
2.3	3.1	10

Organics per acre WLAs for Individual General Construction or Industrial Storm Water Permittees (mg/yr/ac)

Chlordane	Total PCBs
0.03	1.5

Waste load allocations will be incorporated into the State Board general permit upon renewal or into a watershed spec ific general construction storm water permit developed by the Regional Board.

Within seven years of the effective date of the TMDL, the construction industry will submit the results of BMP effectiveness studies to determine BMPs that will achieve compliance with the waste load allocations assigned to construction storm water permittees. Regional Board staff will bring the recommended BMPs before the Regional Board for consideration within eight years of the effective date of the TMDL. General construction storm water permittees will be considered in compliance with waste load allocations if they implement these Regional Board approved BMPs.

All general construction permittees must implement the approved BMPs within nine years of the effective date of the TMDL. If no effectiveness studies are conducted and no BMPs are approved by the Regional Board within eight years of the effective date of

ED_002781A_00003896-00786

the TMDL, each general construction storm water permit holder will be subject to site-specific BMPs and monitoring requirements to demonstrate compliance with waste load allocations.

Region 4 San Gabriel River and Tributaries-Metals and Selenium (EPA-established TMDL – Effective date: 3/26/07)

Wet-weather allocations

Waterbody	Copper	Lead	Zinc
San Gabriel River Reach 2*		0.8 kg/d	
Coyote Creek**	0.513 kg/d	2.07 kg/d	3.0 kg/d

*Mass-based allocations are based on a flow of 260 cfs (daily storm volume = 6.4×10^8 liters)

**Mass-based allocations are based on a flow of 156 cfs (daily storm volume = 3.8×10^8 liters)

Dry-weather allocations

The dry-weather copper waste load allocation for general construction storm water permittees that discharge to San Gabriel Reach 1, Coyote Creek, and the Estuary is zero.

The dry-weather selenium allocation for general construction storm water permittees that discharge to San Jose Creek Reach 1 and Reach 2 is 5 µg/L (total recoverable metals).

Region 4 Upper Santa Clara River Chloride TMDL Adopted by Resolution No 2006-016 Effective Date June 12, 2008

"Other NPDES dischargers" have a chloride WLA equal to 100 mg/L.

This TMDL was revised by Resolution No 2008-012, which, when it becomes effective, includes the following conditional WLAs for "Other minor NPDES discharges":

ED_002781A_00003896-00787

Reach	Concentration-based Conditional WLA for Chloride (mg/L)*
6	150 (12-month Average), 230 (Daily Maximum)
5	150 (12-month Average), 230 (Daily Maximum)
4B	117 (3-month Average), 230 (Daily Maximum)

*The conditional WLAs for chloride for all point sources shall apply only when chloride load reductions and/or chloride export projects are in operation by the Santa Clarita Valley Sanitation District according to the implementation plan for the TMDL. If these conditions are not met, WLAs shall be based on existing water quality objectives for chloride of 100 mg/L.

Region 4 The Harbor Beaches of Ventura County-Bacteria (Adopted by Resolution No. 2007-017)
Effective Date – December 18, 2008

Current and future enrollees in the Statewide Construction Activity Storm Water General Permit in the Channel Islands Harbor subwatershed are assigned WLAs of zero (0) days of allowable exceedances of the single sample limits and the rolling 30-day geometric mean limits.

Single Sample Limits are:
a. Total coliform density shall not exceed 10,000/100 ml.
b. Fecal coliform density shall not exceed 400/100 ml.
c. Enterococcus density shall not exceed 104/100 ml.
d. Total coliform density shall not exceed 1,000/100 ml, if the ratio of fecal-to-total coliform exceeds 0.1.

Rolling 30-day Geometric Mean Limits are:
a. Total coliform density shall not exceed 1,000/100 ml.
b. Fecal coliform density shall not exceed 200/100 ml.
c. Enterococcus density shall not exceed 35/100 ml.

ED_002781A_00003896-00788

Los Angeles Harbor Bacteria TMDL (Adopted by Resolution No. 2004-001)
Effective Date – March 10, 2005

Current and future enrollees in the Statewide Construction Activity Storm Water General Permit in the watershed are assigned WLAs of zero (0) days of allowable exceedances of the single sample limits and the rolling 30-day geometric mean.

Single Sample Limits are:
a. Total coliform density shall not exceed 10,000/100 ml.
b. Fecal coliform density shall not exceed 400/100 ml.
c. Enterococcus density shall not exceed 104/100 ml.
d. Total coliform density shall not exceed 1,000/100 ml, if the ratio of fecal-to-total coliform exceeds 0.1.

Rolling 30-day Geometric Mean Limits are:
a. Total coliform density shall not exceed 1,000/100 ml.
b. Fecal coliform density shall not exceed 200/100 ml.
c. Enterococcus density shall not exceed 35/100 ml.

Ballona Creek Bacteria TMDL (Adopted by Resolution No. 2006-011)
Effective Date – April 27, 2007

Current and future enrollees in the Statewide Construction Activity Storm Water General Permit in the watershed are assigned WLAs of zero (0) days of allowable exceedances of the single sample limits and the rolling 30-day geometric mean.

Single Sample Limits are:
a. Total coliform density shall not exceed 10,000/100 ml.
b. Fecal coliform density shall not exceed 400/100 ml.
c. Enterococcus density shall not exceed 104/100 ml.
d. Total coliform density shall not exceed 1,000/100 ml, if the ratio of fecal-to-total coliform exceeds 0.1.

Rolling 30-day Geometric Mean Limits are:
a. Total coliform density shall not exceed 1,000/100 ml.
b. Fecal coliform density shall not exceed 200/100 ml.
c. Enterococcus density shall not exceed 35/100 ml.

ED_002781A_00003896-00789

Region 4 Resolution No. 03-009 Los Angeles River and Tributaries-Nutrients

Minor Point Sources
Waste loads are allocated to minor point sources enrolled under NPDES or WDR permits including but not limited to Tapia WRP, Whittier Narrows WRP, Los Angeles Zoo WRP, industrial and construction stormwater, and municipal storm water and urban runoff from municipal separate storm sewer systems (MS4s)

Region 4 Minor Point Sources for NPDES/WDR Permits TMDL Effective Date: 3 23 2004 TMDL Type: River	Pollutant Stressor/WLA				
	Total Ammonia (NH_3)		**Nitrate-nitrogen (NO_3-N)**	**Nitrite-nitrogen (NO_2-N)**	**NO_3-N + NO_3-N**
	1 Hr Ave mg/l	30 Day Ave mg/l	30 Day Ave mg/l		30 Day Ave mg/l
LA River Above Los Angeles-Glendale WRP (LAG)	4.7 1.6 8.0			1.0	8.0
LA River Below LAG	8.7	2.4	8.0	1.0	8.0
Los Angeles Tributaries 10.1		2.3	8.0	1.0	8.0

Malibu Creek Attachment A to Resolution No. 2004-019R-Bacteria

Effective date: 1 24 2006. The WLAs for permittees under the NPDES General Stormwater Construction Permit are zero (0) days of allowable exceedances for the single sample limits and the rolling 30-day geometric mean.

Single Sample Limits are:
a. Total coliform density shall not exceed 10,000/100 ml.
b. Fecal coliform density shall not exceed 400/100 ml.
c. Enterococcus density shall not exceed 104/100 ml.
d. Total coliform density shall not exceed 1,000/100 ml, if the ratio of fecal-to-total coliform exceeds 0.1.

Rolling 30-day Geometric Mean Limits are:
a. Total coliform density shall not exceed 1,000/100 ml.
b. Fecal coliform density shall not exceed 200/100 ml.
c. Enterococcus density shall not exceed 35/100 ml.

ED_002781A_00003896-00790

Region 4 Marina del Rey Harbor, Mothers' Beach and Back Basins
Attachment A to Resolution No. 2003-012-Bacteria

Effective date: 3 18 2004. Discharges from general construction storm water permits are not expected to be a significant source of bacteria. Therefore, the WLAs for these discharges are zero (0) days of allowable exceedances for the single sample limits and the rolling 30-day geometric mean. Any future enrollees under a general NPDES permit, general industrial storm water permit or general construction storm water permit within the MdR Watershed will also be subject to a WLA of zero days of allowable exceedances.

Single Sample Limits are:
a. Total coliform density shall not exceed 10,000/100 ml.
b. Fecal coliform density shall not exceed 400/100 ml.
c. Enterococcus density shall not exceed 104/100 ml.
d. Total coliform density shall not exceed 1,000/100 ml, if the ratio of fecal-to-total coliform exceeds 0.1.

Rolling 30-day Geometric Mean Limits are:
a. Total coliform density shall not exceed 1,000/100 ml.
b. Fecal coliform density shall not exceed 200/100 ml.
c. Enterococcus density shall not exceed 35/100 ml.

Santa Clara River Nutrients TMDL (Adopted by Resolution No. 2003-011
Effective Date - March 23, 2004

Concentration-based wasteloads are allocated to municipal, industrial and construction stormwater sources regulated under NPDES permits. For stormwater permittees discharging into Reach 7, the thirty-day WLA for ammonia as nitrogen is 1.75 mg/L and the one-hour WLA for ammonia as nitrogen is 5.2 mg/L; the thirty-day average WLA for nitrate plus nitrite as nitrogen is 6.8 mg/L. For stormwater permittees discharging into Reach 3, the thirty-day WLA for ammonia as nitrogen is 2.0 mg/L and the one-hour WLA for ammonia as nitrogen is 4.2 mg/L; the thirty-day average WLA for nitrate plus nitrite nitrogen is 8.1 mg/L.

ED_002781A_00003896-00791

Region 8 RESOLUTION NO. R8-2007- 0024

Total Maximum Daily Loads (TMDLs) for San Diego Creek,
Upper and Lower Newport Bay, Orange County, California

Region 8 NPDES Construction Permit TMDL Completion Date: 1 24 1995	Organochlorine Compounds							
	Total DDT		**Chlordane**		**Total PCBs**		**Toxaphene**	
TMDL Type: River. Cr, Bay	g/day	g/yr	g/day	g/yr	g/day	g/yr	g/day	g/yr
San Diego Creek	.27	99.8	**.18***	**64.3***	**.09***	**31.5***	.004 1.5	
Upper Newport Bay	.11	40.3 .06		23.4 .06		23.2	**X**	**X**
Lower Newport Bay	.04	14.9	.02 8.6 .17	60.7			**X**	**X**

*Red= Informational WLA only, not for enforcement purposes

Organochlorine Compounds TMDLs Implementation Tasks and Schedule

Regional Board staff shall develop a SWPPP Improvement Program that identifies the Regional Board's expectations with respect to the content of SWPPPs, including documentation regarding the selection and implementation of BMPs, and a sampling and analysis plan. The Improvement Program shall include specific guidance regarding the development and implementation of monitoring plans, including the constituents to be monitored, sampling frequency and analytical protocols. The SWPPP Improvement Program shall be completed by (*the date of OAL approval of this BPA*). ***No later than two months*** from completion of the Improvement Program, Board staff shall assure that the requirements of the Program are communicated to interested parties, including dischargers with existing authorizations under the General Construction Permit. Existing, authorized dischargers shall revise their project SWPPPs as needed to address the Program requirements as soon as possible but ***no later than (three months of completion of the SWPPP Improvement Program)***. Applicable SWPPPs that do not adequately address the Program requirements shall be considered inadequate and enforcement by the Regional Board shall proceed accordingly. The Caltrans and Orange County MS4 permits shall be revised as needed to assure that the permittees communicate the Regional Board's SWPPP expectations, based on the SWPPP Improvement Program, with the Standard Conditions of Approval.

ED_002781A_00003896-00792

APPENDIX 5:
Glossary

Active Areas of Construction
All areas subject to land surface disturbance activities related to the project including, but not limited to, project staging areas, immediate access areas and storage areas. All previously active areas are still considered active areas until final stabilization is complete. [The construction activity Phases used in this General Permit are the Preliminary Phase, Grading and Land Development Phase, Streets and Utilities Phase, and the Vertical Construction Phase.]

Active Treatment System (ATS)
A treatment system that employs chemical coagulation, chemical flocculation, or electrocoagulation to aid in the reduction of turbidity caused by fine suspended sediment.

Acute Toxicity Test
A chemical stimulus severe enough to rapidly induce a negative effect; in aquatic toxicity tests, an effect observed within 96 hours or less is considered acute.

Air Deposition
Airborne particulates from construction activities.

Approved Signatory
A person who has been authorized by the Legally Responsible Person to sign, certify, and electronically submit Permit Registration Documents, Notices of Termination, and any other documents, reports, or information required by the General Permit, the State or Regional Water Board, or U.S. EPA. The Approved Signatory must be one of the following:

1. For a corporation or limited liability company: a responsible corporate officer. For the purpose of this section, a responsible corporate officer means: (a) a president, secretary, treasurer, or vice-president of the corporation in charge of a principal business function, or any other person who performs similar policy or decision-making functions for the corporation or limited liability company; or (b) the manager of the facility if authority to sign documents has been assigned or delegated to the manager in accordance with corporate procedures;

2. For a partnership or sole proprietorship: a general partner or the proprietor, respectively;

3. For a municipality, State, Federal, or other public agency: a principal executive officer, ranking elected official, city manager, council president, or any other authorized public employee with managerial responsibility over the

ED_002781A_00003896-00793

construction or land disturbance project (including, but not limited to, project manager, project superintendent, or resident engineer);

4. For the military: any military officer or Department of Defense civilian, acting in an equivalent capacity to a military officer, who has been designated;

5. For a public university: an authorized university official;

6. For an individual: the individual, because the individual acts as both the Legally Responsible Person and the Approved Signatory; or

7. For any type of entity not listed above (e.g. trusts, estates, receivers): an authorized person with managerial authority over the construction or land disturbance project.

Beneficial Uses
As defined in the California Water Code, beneficial uses of the waters of the state that may be protected against quality degradation include, but are not limited to, domestic, municipal, agricultural and industrial supply; power generation; recreation; aesthetic enjoyment; navigation; and preservation and enhancement of fish, wildlife, and other aquatic resources or preserves.

Best Available Technology Economically Achievable (BAT)
As defined by USEPA, BAT is a technology-based standard established by the Clean Water Act (CWA) as the most appropriate means available on a national basis for controlling the direct discharge of toxic and nonconventional pollutants to navigable waters. The BAT effluent limitations guidelines, in general, represent the best existing performance of treatment technologies that are economically achievable within an industrial point source category or subcategory.

Best Conventional Pollutant Control Technology (BCT)
As defined by USEPA, BCT is a technology-based standard for the discharge from existing industrial point sources of conventional pollutants including biochemical oxygen demand (BOD), total suspended sediment (TSS), fecal coliform, pH, oil and grease.

Best Professional Judgment (BPJ)
The method used by permit writers to develop technology-based NPDES permit conditions on a case-by-case basis using all reasonably available and relevant data.

Best Management Practices (BMPs)
BMPs are scheduling of activities, prohibitions of practices, maintenance procedures, and other management practices to prevent or reduce the discharge of pollutants. BMPs also include treatment requirements, operating procedures,

and practices to control site runoff, spillage or leaks, sludge or waste disposal, or drainage from raw material storage.

Chain of Custody (COC)
Form used to track sample handling as samples progress from sample collection to the analytical laboratory. The COC is then used to track the resulting analytical data from the laboratory to the client. COC forms can be obtained from an analytical laboratory upon request.

Coagulation
The clumping of particles in a discharge to settle out impurities, often induced by chemicals such as lime, alum, and iron salts.

Common Plan of Development
Generally a contiguous area where multiple, distinct construction activities may be taking place at different times under one plan. A plan is generally defined as any piece of documentation or physical demarcation that indicates that construction activities may occur on a common plot. Such documentation could consist of a tract map, parcel map, demolition plans, grading plans or contract documents. Any of these documents could delineate the boundaries of a common plan area. However, broad planning documents, such as land use master plans, conceptual master plans, or broad-based CEQA or NEPA documents that identify potential projects for an agency or facility are not considered common plans of development.

Daily Average Discharge
The discharge of a pollutant measured during any 24-hour period that reasonably represents a calendar day for purposes of sampling. For pollutants with limitations expressed in units of mass, the daily discharge is calculated as the total mass of the pollutant discharged during the day. For pollutants with limitations expressed in other units of measurement (e.g., concentration) the daily discharge is calculated as the average measurement of the pollutant throughout the day (40 CFR 122.2). In the case of pH, the pH must first be converted from a log scale.

Debris
Litter, rubble, discarded refuse, and remains of destroyed inorganic anthropogenic waste.

Direct Discharge
A discharge that is routed directly to waters of the United States by means of a pipe, channel, or ditch (including a municipal storm sewer system), or through surface runoff.

Discharger
The Legally Responsible Person (see definition) or entity subject to this General Permit.

Dose Rate (for ATS)
In exposure assessment, dose (e.g. of a chemical) per time unit (e.g. mg/day), sometimes also called dosage.

Drainage Area
The area of land that drains water, sediment, pollutants, and dissolved materials to a common outlet.

Effluent
Any discharge of water by a discharger either to the receiving water or beyond the property boundary controlled by the discharger.

Effluent Limitation
Any numeric or narrative restriction imposed on quantities, discharge rates, and concentrations of pollutants which are discharged from point sources into waters of the United States, the waters of the contiguous zone, or the ocean.

Erosion
The process, by which soil particles are detached and transported by the actions of wind, water, or gravity.

Erosion Control BMPs
Vegetation, such as grasses and wildflowers, and other materials, such as straw, fiber, stabilizing emulsion, protective blankets, etc., placed to stabilize areas of disturbed soils, reduce loss of soil due to the action of water or wind, and prevent water pollution.

Field Measurements
Testing procedures performed in the field with portable field-testing kits or meters.

Final Stabilization
All soil disturbing activities at each individual parcel within the site have been completed in a manner consistent with the requirements in this General Permit.

First Order Stream
Stream with no tributaries.

Flocculants
Substances that interact with suspended particles and bind them together to form flocs.

Good Housekeeping BMPs
BMPs designed to reduce or eliminate the addition of pollutants to construction site runoff through analysis of pollutant sources, implementation of proper handling/disposal practices, employee education, and other actions.

Grading Phase (part of the Grading and Land Development Phase)
Includes reconfiguring the topography and slope including; alluvium removals; canyon cleanouts; rock undercuts; keyway excavations; land form grading; and stockpiling of select material for capping operations.

Hydromodification
Hydromodification is the alteration of the hydrologic characteristics of coastal and non-coastal waters, which in turn could cause degradation of water resources. Hydromodification can cause excessive erosion and/or sedimentation rates, causing excessive turbidity, channel aggradation and/or degradation.

Identified Organisms
Organisms within a sub-sample that is specifically identified and counted.

Inactive Areas of Construction
Areas of construction activity that are not active and those that have been active and are not scheduled to be re-disturbed for at least 14 days.

Index Period
The period of time during which bioassessment samples must be collected to produce results suitable for assessing the biological integrity of streams and rivers. Instream communities naturally vary over the course of a year,and sampling during the index period ensures that samples are collected during a time frame when communities are stable so that year-to-year consistency is obtained. The index period approach provides a cost-effective alternative to year-round sampling. Furthermore, sampling within the appropriate index period will yield results that are comparable to the assessment thresholds or criteria for a given region, which are established for the same index period. Because index periods differ for different parts of the state, it is essential to know the index period for your area.

K Factor
The soil erodibility factor used in the Revised Universal Soil Loss Equation (RUSLE). It represents the combination of detachability of the soil, runoff potential of the soil, and the transportability of the sediment eroded from the soil.

Legally Responsible Person
The Legally Responsible Person (LRP) will typically be the project proponent. The categories of persons or entities that are eligible to serve as the LRP are set forth below. For any construction or land disturbance project where multiple persons or entities are eligible to serve as the LRP, those persons or entities

ED_002781A_00003896-00797

shall select a single LRP. In exceptional circumstances, a person or entity that qualifies as the LRP may provide written authorization to another person or entity to serve as the LRP. In such a circumstance, the person or entity that provides the authorization retains all responsibility for compliance with the General Permit. Except as provided in category 2(d), a contractor who does not satisfy the requirements of any of the categories below is not qualified to be an LRP.

The following persons or entities may serve as an LRP:

1. A person, company, agency, or other entity that possesses a real property interest (including, but not limited to, fee simple ownership, easement, leasehold, or other rights of way) in the land upon which the construction or land disturbance activities will occur for the regulated site.

2. In addition to the above, the following persons or entities may also serve as an LRP:

   a. For linear underground/overhead projects, the utility company, municipality, or other public or private company or agency that owns or operates the LUP;

   b. For land controlled by an estate or similar entity, the person who has day-to-day control over the land (including, but not limited to, a bankruptcy trustee, receiver, or conservator);

   c. For pollution investigation and remediation projects, any potentially responsible party that has received permission to conduct the project from the holder of a real property interest in the land; or

   d. For U.S. Army Corp of Engineers projects, the U.S. Army Corps of Engineers may provide written authorization to its bonded contractor to serve as the LRP, provided, however, that the U.S. Army Corps of Engineers is also responsible for compliance with the general permit, as authorized by the Clean Water Act or the Federal Facilities Compliance Act.

Likely Precipitation Event
Any weather pattern that is forecasted to have a 50% or greater chance of producing precipitation in the project area. The discharger shall obtain likely precipitation forecast information from the National Weather Service Forecast Office (e.g., by entering the zip code of the project's location at http://www.srh.noaa.gov/forecast).

Maximum Allowable Threshold Concentration (MATC)
The allowable concentration of residual, or dissolved, coagulant/flocculant in effluent. The MATC shall be coagulant/flocculant-specific, and based on toxicity

testing conducted by an independent, third-party laboratory. A typical MATC would be:

The MATC is equal to the geometric mean of the NOEC (No Observed Effect Concentration) and LOEC (Lowest Observed Effect Concentration) Acute and Chronic toxicity results for most sensitive species determined for the specific coagulant. The most sensitive species test shall be used to determine the MATC.

Natural Channel Evolution
The physical trend in channel adjustments following a disturbance that causes the river to have more energy and degrade or aggrade more sediment. Channels have been observed to pass through 5 to 9 evolution types. Once they pass though the suite of evolution stages, they will rest in a new state of equilibrium.

Non-Storm Water Discharges
Discharges are discharges that do not originate from precipitation events. They can include, but are not limited to, discharges of process water, air conditioner condensate, non-contact cooling water, vehicle wash water, sanitary wastes, concrete washout water, paint wash water, irrigation water, or pipe testing water.

Non-Visible Pollutants
Pollutants associated with a specific site or activity that can have a negative impact on water quality, but cannot be seen though observation (ex: chlorine). Such pollutants being discharged are not authorized.

Numeric Action Level (NAL)
Level is used as a warning to evaluate if best management practices are effective and take necessary corrective actions. Not an effluent limit.

Original Sample Material
The material (i.e., macroinvertebrates, organic material, gravel, etc.) remaining after the subsample has been removed for identification.

pH
Unit universally used to express the intensity of the acid or alkaline condition of a water sample. The pH of natural waters tends to range between 6 and 9, with neutral being 7. Extremes of pH can have deleterious effects on aquatic systems.

Post-Construction BMPs
Structural and non-structural controls which detain, retain, or filter the release of pollutants to receiving waters after final stabilization is attained.

Preliminary Phase (Pre-Construction Phase - Part of the Grading and Land Development Phase)
Construction stage including rough grading and/or disking, clearing and grubbing operations, or any soil disturbance prior to mass grading.

Project

Qualified SWPPP Developer
Individual who is authorized to develop and revise SWPPPs.

Qualified SWPPP Practitioner
Individual assigned responsibility for non-storm water and storm water visual observations, sampling and analysis, and responsibility to ensure full compliance with the permit and implementation of all elements of the SWPPP, including the preparation of the annual compliance evaluation and the elimination of all unauthorized discharges.

Qualifying Rain Event
Any event that produces 0.5 inches or more precipitation with a 48 hour or greater period between rain events.

R Factor
Erosivity factor used in the Revised Universal Soil Loss Equation (RUSLE). The R factor represents the erosivity of the climate at a particular location. An average annual value of R is determined from historical weather records using erosivity values determined for individual storms. The erosivity of an individual storm is computed as the product of the storm's total energy, which is closely related to storm amount, and the storm's maximum 30-minute intensity.

Rain Event Action Plan (REAP)
Written document, specific for each rain event, that when implemented is designed to protect all exposed portions of the site within 48 hours of any likely precipitation event.

Remaining Sub sampled Material
The material (e.g., organic material, gravel, etc.) that remains after the organisms to be identified have been removed from the subsample for identification. (Generally, no macroinvertebrates are present in the remaining subsampled material, but the sample needs to be checked and verified using a complete Quality Assurance (QA) plan)

Routine Maintenance
Activities intended to maintain the original line and grade, hydraulic capacity, or original purpose of a facility.

Runoff Control BMPs
Measures used to divert runon from offsite and runoff within the site.

Run-on
Discharges that originate offsite and flow onto the property of a separate project site.

Revised Universal Soil Loss Equation (RUSLE)
Empirical model that calculates average annual soil loss as a function of rainfall and runoff erosivity, soil erodibility, topography, erosion controls, and sediment controls.

Sampling and Analysis Plan
Document that describes how the samples will be collected, under what conditions, where and when the samples will be collected, what the sample will be tested for, what test methods and detection limits will be used, and what methods/procedures will be maintained to ensure the integrity of the sample during collection, storage, shipping and testing (i.e., quality assurance/quality control protocols).

Sediment
Solid particulate matter, both mineral and organic, that is in suspension, is being transported, or has been moved from its site of origin by air, water, gravity, or ice and has come to rest on the earth's surface either above or below sea level.

Sedimentation
Process of deposition of suspended matter carried by water, wastewater, or other liquids, by gravity. It is usually accomplished by reducing the velocity of the liquid below the point at which it can transport the suspended material.

Sediment Control BMPs
Practices that trap soil particles after they have been eroded by rain, flowing water, or wind. They include those practices that intercept and slow or detain the flow of storm water to allow sediment to settle and be trapped (e.g., silt fence, sediment basin, fiber rolls, etc.).

Settleable Solids (SS)
Solid material that can be settled within a water column during a specified time frame. It is typically tested by placing a water sample into an Imhoff settling cone and then allowing the solids to settle by gravity for a given length of time. Results are reported either as a volume (mL/L) or a mass (mg/L) concentration.

Sheet Flow
Flow of water that occurs overland in areas where there are no defined channels where the water spreads out over a large area at a uniform depth.

Site

Soil Amendment
Any material that is added to the soil to change its chemical properties, engineering properties, or erosion resistance that could become mobilized by storm water.

Streets and Utilities Phase
Construction stage including excavation and street paving, lot grading, curbs, gutters and sidewalks, public utilities, public water facilities including fire hydrants, public sanitary sewer systems, storm sewer system and/or other drainage improvements.

Structural Controls
Any structural facility designed and constructed to mitigate the adverse impacts of storm water and urban runoff pollution

Suspended Sediment Concentration (SSC)
The measure of the concentration of suspended solid material in a water sample by measuring the dry weight of all of the solid material from a known volume of a collected water sample. Results are reported in mg/L.

Total Suspended Solids (TSS)
The measure of the suspended solids in a water sample includes inorganic substances, such as soil particles and organic substances, such as algae, aquatic plant/animal waste, particles related to industrial/sewage waste, etc. The TSS test measures the concentration of suspended solids in water by measuring the dry weight of a solid material contained in a known volume of a sub-sample of a collected water sample. Results are reported in mg/L.

Toxicity
The adverse response(s) of organisms to chemicals or physical agents ranging from mortality to physiological responses such as impaired reproduction or growth anomalies.

Turbidity
The cloudiness of water quantified by the degree to which light traveling through a water column is scattered by the suspended organic and inorganic particles it contains. The turbidity test is reported in Nephelometric Turbidity Units (NTU) or Jackson Turbidity Units (JTU).

Vertical Construction Phase
The Build out of structures from foundations to roofing, including rough landscaping.

Waters of the United States
Generally refers to surface waters, as defined by the federal Environmental Protection Agency in 40 C.F.R. § 122.2.[1]

Water Quality Objectives (WQO)
Water quality objectives are defined in the California Water Code as limits or levels of water quality constituents or characteristics, which are established for the reasonable protection of beneficial uses of water or the prevention of nuisance within a specific area.

[1] The application of the definition of "waters of the United States" may be difficult to determine; there are currently several judicial decisions that create some confusion. If a landowner is unsure whether the discharge must be covered by this General Permit, the landowner may wish to seek legal advice.

ED_002781A_00003896-00803

APPENDIX 6:
Acronym List

ASBS	Areas of Special Biological Significance
ASTM	American Society of Testing and Materials; Standard Test Method for Particle-Size Analysis of Soils
ATS	Active Treatment System
BASMAA	Bay Area Storm water Management Agencies Association
BAT	Best Available Technology Economically Achievable
BCT	Best Conventional Pollutant Control Technology
BMP	Best Management Practices
BOD	Biochemical Oxygen Demand
BPJ	Best Professional Judgment
CAFO	Confined Animal Feeding Operation
CCR	California Code of Regulations
CEQA	California Environmental Quality Act
CFR	Code of Federal Regulations
CGP	NPDES General Permit for Storm Water Discharges Associated with Construction Activities
CIWQS	California Integrated Water Quality System
CKD	Cement Kiln Dust
COC	Chain of Custody
CPESC	Certified Professional in Erosion and Sediment Control
CPSWQ	Certified Professional in Storm Water Quality
CSMP	Construction Site Monitoring Program
CTB	Cement Treated Base
CTR	California Toxics Rule
CWA	Clean Water Act
CWC	California Water Code
CWP	Center for Watershed Protection
DADMAC	Diallyldimethyl-ammonium chloride
DDNR	Delaware Department of Natural Resources
DFG	Department of Fish and Game
DHS	Department of Health Services
DWQ	Division of Water Quality
EC	Electrical Conductivity
ELAP	Environmental Laboratory Accreditation Program
EPA	Environmental Protection Agency
ESA	Environmentally Sensitive Area
ESC	Erosion and Sediment Control
HSPF	Hydrologic Simulation Program Fortran
JTU	Jackson Turbidity Units
LID	Low Impact Development
LOEC	Lowest Observed Effect Concentration
LRP	Legally Responsible Person
LUP	Linear Underground/Overhead Projects

MATC	Maximum Allowable Threshold Concentration
MDL	Method Detection Limits
MRR	Monitoring and Reporting Requirements
MS4	Municipal Separate Storm Sewer System
MUSLE	Modified Universal Soil Loss Equation
NAL	Numeric Action Level
NEL	Numeric Effluent Limitation
NICET	National Institute for Certification in Engineering Technologies
NOAA	National Oceanic and Atmospheric Administration
NOEC	No Observed Effect Concentration
NOI	Notice of Intent
NOT	Notice of Termination
NPDES	National Pollutant Discharge Elimination System
NRCS	Natural Resources Conservation Service
NTR	National Toxics Rule
NTU	Nephelometric Turbidity Units
O&M	Operation and Maintenance
PAC	Polyaluminum chloride
PAM	Polyacrylamide
PASS	Polyaluminum chloride Silica/sulfate
POC	Pollutants of Concern
PoP	Probability of Precipitation
POTW	Publicly Owned Treatment Works
PRDs	Permit Registration Documents
PWS	Planning Watershed
QAMP	Quality Assurance Management Plan
QA/QC	Quality Assurance/Quality Control
REAP	Rain Event Action Plan
Regional Board	Regional Water Quality Control Board
ROWD	Report of Waste Discharge
RUSLE	Revised Universal Soil Loss Equation
RW	Receiving Water
SMARTS	Storm water Multi Application Reporting and Tracking System
SS	Settleable Solids
SSC	Suspended Sediment Concentration
SUSMP	Standard Urban Storm Water Mitigation Plan
SW	Storm Water
SWARM	Storm Water Annual Report Module
SWAMP	Surface Water Ambient Monitoring Program
SWMM	Storm Water Management Model
SWMP	Storm Water Management Program
SWPPP	Storm Water Pollution Prevention Plan
TC	Treatment Control
TDS	Total Dissolved Solids

TMDL	Total Maximum Daily Load
TSS	Total Suspended Solids
USACOE	U.S. Army Corps of Engineers
USC	United States Code
USEPA	United States Environmental Protection Agency
USGS	United States Geological Survey
WDID	Waste Discharge Identification Number
WDR	Waste Discharge Requirements
WLA	Waste Load Allocation
WET	Whole Effluent Toxicity
WRCC	Western Regional Climate Center
WQBEL	Water Quality Based Effluent Limitation
WQO	Water Quality Objective
WQS	Water Quality Standard

APPENDIX 7:
State and Regional Water Resources Control Board Contacts

NORTH COAST REGION (1)
5550 Skylane Blvd, Ste. A
Santa Rose, CA 95403
(707) 576-2220 FAX: (707)523-0135

SAN FRANCISCO BAY REGION (2)
1515 Clay Street, Ste. 1400
Oakland, CA 94612
(510) 622-2300 FAX: (510) 622-2640

CENTRAL COAST REGION (3)
895 Aerovista Place, Ste 101
San Luis Obispo, CA 93401
(805) 549-3147 FAX: (805) 543-0397

LOS ANGELES REGION (4)
320 W. 4th Street, Ste. 200
Los Angeles, CA 90013
(213) 576-6600 FAX: (213) 576-6640

CENTRAL VALLEY REGION (5S)
11020 Sun Center Dr., #200
Rancho Cordova, CA 95670-6114
(916) 464-3291 FAX: (916) 464-4645

FRESNO BRANCH OFFICE (5F)
1685 E St.
Fresno, CA 93706
(559) 445-5116 FAX: (559) 445-5910

REDDING BRANCH OFFICE (5R)
415 Knollcrest Drive, Ste. 100
Redding, CA 96002
(530) 224-4845 FAX: (530) 224-4857

LAHONTAN REGION (6 SLT)
2501 Lake Tahoe Blvd.
South Lake Tahoe, CA 96150
(530) 542-5400 FAX: (530) 544-2271

VICTORVILLE OFFICE (6V)
14440 Civic Drive, Ste. 200
Victorville, CA 92392-2383
(760) 241-6583 FAX: (760) 241-7308

COLORADO RIVER BASIN REGION (7)
73-720 Fred Waring Dr., Ste. 100
Palm Desert, CA 92260
(760) 346-7491 FAX: (760) 341-6820

SANTA ANA REGION (8)
3737 Main Street, Ste. 500
Riverside, CA 92501-3339
Phone (951) 782-4130 FAX: (951) 781-6288

SAN DIEGO REGION (9)
9174 Sky Park Court, Ste. 100
San Diego, CA 92123-4340
(858) 467-2952 FAX: (858) 571-6972

STATE WATER BOARD
PO Box 1977
Sacramento, CA 95812-1977
stormwater@waterboards.ca.gov

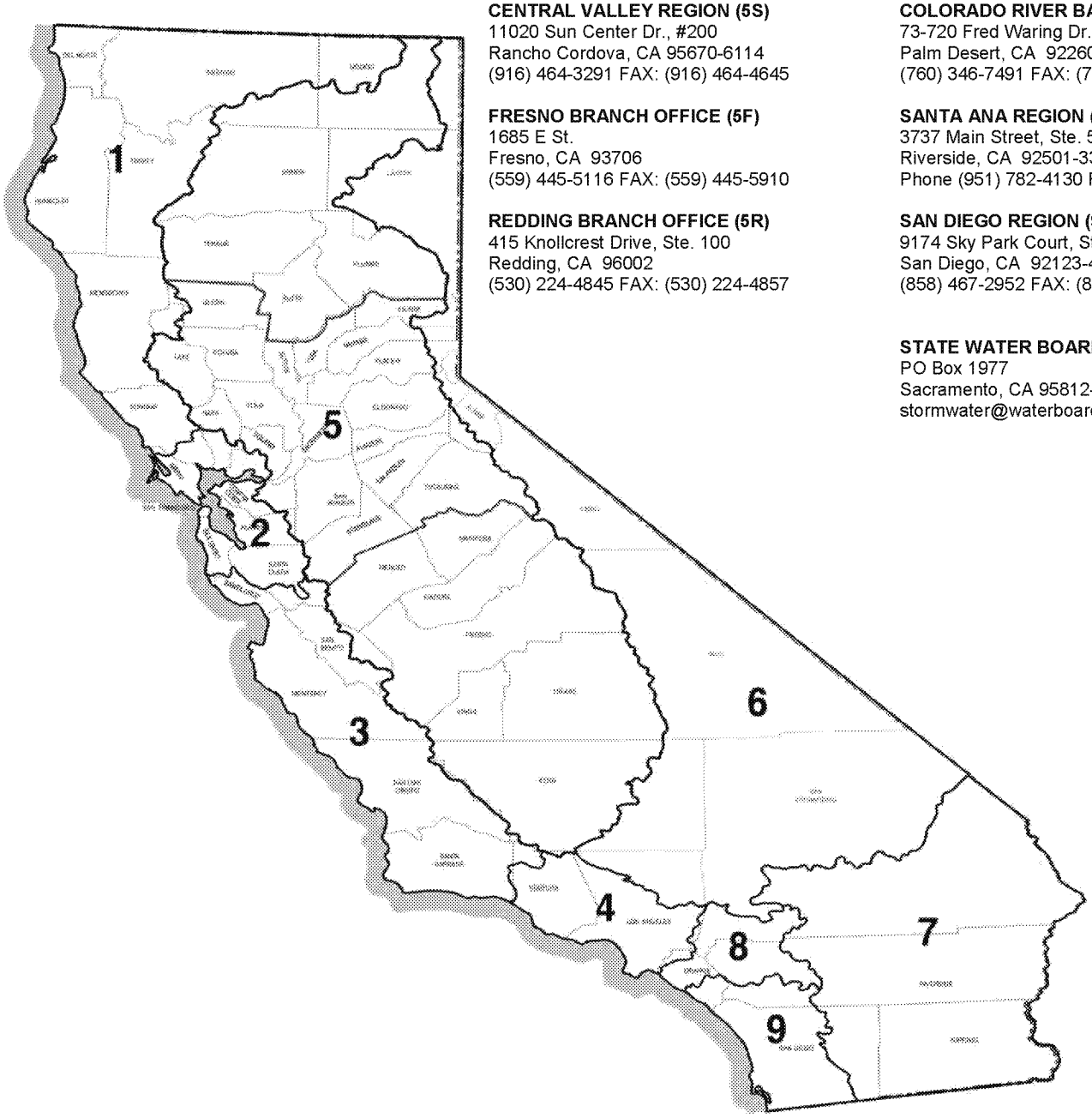

ARCADIS

Appendix B

Permit Registration Documents

ARCADIS

Appendix C

SWPPP Amendment Certification Form

SWPPP Amendment No. _____

Project Name: **Hunters Point Parcel G**

Project Number: _____

Qualified SWPPP Developer's Certification of the

Stormwater Pollution Prevention Plan Amendment

"This Stormwater Pollution Prevention Plan and attachments were prepared under my direction to meet the requirements of the California Construction General Permit (SWRCB Order No. 2009-009-DWQ as amended by 2010-0014-DWQ). I certify that I am a Qualified SWPPP Developer in good standing as of the date signed below."

QSD's Signature	Date
QSD Name	QSD Certificate Number
Title and Affiliation	Telephone
Address	Email

ARCADIS

Appendix D

Permit Registration Document Updates

Log of Updated PRDs

The General Permit allows for the reduction or increase of the total acreage covered under the General Permit when a portion of the project is complete and/or conditions for termination of coverage have been met; when ownership of a portion of the project is purchased by a different entity; or when new acreage is added to the project.

Modified PRDs shall be filed electronically within 30 days of a reduction or increase in total disturbed area if a change in permit covered acreage is to be sought. The SWPPP shall be modified appropriately, with revisions and amendments recorded in Appendix C. Updated PRDs submitted electronically via SMARTS can be found in this Appendix.

This appendix includes all of the following updated PRDs (check all that apply):

☐ Revised Notice of Intent (NOI);

☐ Revised Site Map;

☐ Revised Risk Assessment;

☐ New landowner's information (name, address, phone number, email address); and

☐ New signed certification statement.

Legally Responsible Person	
Signature of Legally Responsible Person or Approved Signatory	Date
Name of Legally Responsible Person or Approved Signatory	Telephone Number

ARCADIS

Appendix E

Risk Level Determination Documentation

	A	B	C
1	**Sediment Risk Factor Worksheet**		**Entry**
2	**A) R Factor**		
3	Analyses of data indicated that when factors other than rainfall are held constant, soil loss is directly proportional to a rainfall factor composed of total storm kinetic energy (E) times the maximum 30-min intensity (I30) (Wischmeier and Smith, 1958). The numerical value of R is the average annual sum of EI30 for storm events during a rainfall record of at least 22 years. "Isoerodent" maps were developed based on R values calculated for more than 1000 locations in the Western U.S. Refer to the link below to determine the R factor for the project site.		
4	http://cfpub.epa.gov/npdes/stormwater/LEW/lewCalculator.cfm		
5	**R Factor Value**		22.36
6	**B) K Factor (weighted average, by area, for all site soils)**		
7	The soil-erodibility factor K represents: (1) susceptibility of soil or surface material to erosion, (2) transportability of the sediment, and (3) the amount and rate of runoff given a particular rainfall input, as measured under a standard condition. Fine-textured soils that are high in clay have low K values (about 0.05 to 0.15) because the particles are resistant to detachment. Coarse-textured soils, such as sandy soils, also have low K values (about 0.05 to 0.2) because of high infiltration resulting in low runoff even though these particles are easily detached. Medium-textured soils, such as a silt loam, have moderate K values (about 0.25 to 0.45) because they are moderately susceptible to particle detachment and they produce runoff at moderate rates. Soils having a high silt content are especially susceptible to erosion and have high K values, which can exceed 0.45 and can be as large as 0.65. Silt-size particles are easily detached and tend to crust, producing high rates and large volumes of runoff. Use Site-specific data must be submitted.		
8	Site-specific K factor guidance		
9	**K Factor Value**		0.25
10	**C) LS Factor (weighted average, by area, for all slopes)**		
11	The effect of topography on erosion is accounted for by the LS factor, which combines the effects of a hillslope-length factor, L, and a hillslope-gradient factor, S. Generally speaking, as hillslope length and/or hillslope gradient increase, soil loss increases. As hillslope length increases, total soil loss and soil loss per unit area increase due to the progressive accumulation of runoff in the downslope direction. As the hillslope gradient increases, the velocity and erosivity of runoff increases. Use the LS table located in separate tab of this spreadsheet to determine LS factors. Estimate the weighted LS for the site prior to construction.		
12	LS Table		
13	**LS Factor Value**		0.06
14			
15	**Watershed Erosion Estimate (=RxKxLS) in tons/acre**		0.3354
16	**Site Sediment Risk Factor**		**Low**
17	Low Sediment Risk: < 15 tons/acre		
18	Medium Sediment Risk: >=15 and <75 tons/acre		
19	High Sediment Risk: >= 75 tons/acre		
20			

Receiving Water (RW) Risk Factor Worksheet	Entry	Score
A. Watershed Characteristics	**yes/no**	
A.1. Does the disturbed area discharge (either directly or indirectly) to a **303(d)-listed waterbody impaired by sediment** (For help with impaired waterbodies please check the attached worksheet or visit the link below) or has a **USEPA approved TMDL implementation plan for sediment**?: 2006 Approved Sediment-impared WBs Worksheet http://www.waterboards.ca.gov/water_issues/programs/tmdl/303d_lists2006_epa.shtml **OR**	**NO**	**Low**
A.2. Does the disturbed area discharge to a waterbody with designated beneficial uses of SPAWN & COLD & MIGRATORY? http://www.ice.ucdavis.edu/geowbs/asp/wbquse.asp		

Combined Risk Level Matrix

Receiving Water Risk	Sediment Risk: Low	Sediment Risk: Medium	Sediment Risk: High
Low	Level 1	Level 2	
High	Level 2		Level 3

Project Sediment Risk: Low

Project RW Risk: Low

Project Combined Risk:

PROJECT SPECIFIC LS FACTOR DETERMINATION

Area	Disturbance Area (SF)	Average Slope (%)	Sheet Flow Length (FT)	LS from Chart	Weighted LS
Northwest	158137	0.13	180	0.056	0.005
Center West	146180	0.83	160	0.052	0.004
Southwest	254083	1.25	150	0.050	0.007
North Central	291220	0.22	230	0.060	0.010
South Central	331394	0.93	270	0.060	0.011
North East	287163	0.19	160	0.052	0.008
Center East	124163	1.33	150	0.050	0.004
South East	164688	3.00	200	0.060	0.006
Total	1756849			Weighted Avg LS	0.056
	40.33 acres				

Sheet Flow Length (ft)	Average Watershed Slope (%) 0.2	0.5	1.0	2.0	3.0	4.0	5.0	6.0
<3	0.05	0.07	0.09	0.13	0.17	0.20	0.23	0.26
6	0.05	0.07	0.09	0.13	0.17	0.20	0.23	0.26
9	0.05	0.07	0.09	0.13	0.17	0.20	0.23	0.26
12	0.05	0.07	0.09	0.13	0.17	0.20	0.23	0.26
15	0.05	0.07	0.09	0.13	0.17	0.20	0.23	0.26
25	0.05	0.07	0.10	0.16	0.21	0.26	0.31	0.36
50	0.05	0.08	0.13	0.21	0.30	0.38	0.46	0.54
75	0.05	0.08	0.14	0.25	0.36	0.47	0.58	0.69
100	0.05	0.09	0.15	0.28	0.41	0.55	0.68	0.82
150	0.05	0.09	0.17	0.33	0.50	0.68	0.86	1.05
200	0.06	0.10	0.18	0.37	0.57	0.79	1.02	1.25
250	0.06	0.10	0.19	0.40	0.64	0.89	1.16	1.43
300	0.06	0.10	0.20	0.43	0.69	0.98	1.28	1.60
400	0.06	0.11	0.22	0.48	0.80	1.14	1.51	1.90
600	0.06	0.12	0.24	0.56	0.96	1.42	1.91	2.43
800	0.06	0.12	0.26	0.63	1.10	1.65	2.25	2.89
1000	0.06	0.13	0.27	0.69	1.23	1.86	2.55	3.30

LS Factors for Construction Sites. *Table from Renard et. al., 1997.*

ARCADIS

Infrastructure · Water · Environment · Buildings

Site-specific R-Factor Calculation
Durable Cover Construction for Remedial Action at Parcel G, Hunters Point Naval Shipyard, San Francisco, California
July, 2012

A site specific R-Factor calculation was prepared for the Durable Cover Construction for the Remedial Action at Parcel G due to EPA Rainfall Erosivity Calculator maintenance, utilizing the EPA Storm Water Phase II Final Rule-Construction Rainfall Erosivity Waiver as directed by the State Water Resources Control Board (SWRCB).

- Figure 1 was referenced to determine the Erosivity Index (EI) Zone, which is 24 based on the Site's location.
- Figure 4 was referenced to interpolate the Isoerodent Value based on the Site's location, which was estimated to be 40.
- The percentages on Table 1 are divided into 15-day periods. The estimated start date is January 10, 2013, which is 0.0% for EI zone 24.
- The estimated end date is April 24, 2013, which is 55.9%.

R-Factor Calculation of the UTC-PWR Site Closure Program
Start: June 1, 2010
End: December 31, 2012
Figure 1 - Erosivity Index Zone Map: EI Zone = 24
Table 1 - Erosivity Index Table:
EI percentage January 10, 2013 (0.0%) to April 24, 2013 (55.9%) = 55.9%
Total Percentage: 55.9%
Figure 4 - Isoerodent Map of California: Interpolated annual erosion index = 40
R-Factor: 40 x 55.9% = 22.36

Attachments:

Attachment A - SWRCB Explanation Letter
Figure 1 - Erosivity Index Zone Map
Figure 4 - Isoerodent Map of California
Table 1 - Erosivity Index Table

CONSTRUCTION GENERAL PERMIT
RISK ASSESSMENT R-FACTOR CALCULATION NOTIFICATION

NATIONAL POLLUTANT DISCHARGE ELIMINATION SYSTEM (NPDES) GENERAL PERMIT FOR STORM WATER DISCHARGES ASSOCIATED WITH CONSTRUCTION AND LAND DISTURBANCE ACTIVITIES

State Water Resources Control Board Order No. 2009-0009-DWQ, as amended by 2010-0014-DWQ (CGP) requires that dischargers assessing Risk must calculate the Rainfall Erosivity Factor (R-Factor) in the Revised Universal Soil Loss Equation through the Environmental Protection Agency (EPA) Rainfall Erosivity Factor Calculator at: http://cfpub.epa.gov/npdes/stormwater/lew/lewcalculator.cfm

The week of February 13, 2012 the Rainfall Erosivity Factor Calculator became unavailable due to maintenance. EPA has approximated that maintenance may take at least 1 month to complete. Until that time, dischargers shall calculate their project R-factor using the Construction Erosivity Waiver Fact Sheet (Fact Sheet) provided by EPA at http://www.epa.gov/npdes/pubs/fact3-1.pdf (also attached). The Fact Sheet provides the instructions and references needed to calculate R-values for a one year period. Projects active for more than a one year period must calculate the R-factor for year 1, and multiply this value based on the estimated duration.

Please contact the Storm Water Help Desk if you have any questions. 1-866-563-3107 or stormwater@waterboards.ca.gov.

Examples:

1. ***Find the R value of a construction project in Sacramento, California with a duration of February 29, 2012 to September 1, 2014 (2.5 years).***

   Figure 1 - Erosivity Index Zone Map:
   The EI distribution zone is 23
   Table 1 – Erosivity Index Table:
   EI percentage February 29 to December 31: 93.5% – 20.9% = 72.6%
   EI percentage January 1 to February 29: 20.9% - 0.0% = 20.9%
   Total EI percentage for 1 year duration: 72.6% + 20.9% = 93.5%
   EI percentage February 29 to September 1 (0.5 year): 54.1% - 20.9% = 33.2%
   Figure 4 – Isoerodent Map of California:
   Interpolated annual erosion index for location: 35

R-Factor for 2 year construction: 35 x (93.5%) x 2 years = 65.45
R-Factor for 0.5 year construction: 35 x (33.2%) = 11.62
R-Factor for complete project duration (2.5 years) = 65.45 + 11.62 = 77.07

2. ***Find the R value of a construction project in San Diego, California with a duration of June 30, 2012 to November 1, 2013 (1.333 years).***

Figure 1 - Erosivity Index Zone Map:
The EI distribution zone is 25
Table 1 – Erosivity Index Table:
EI percentage June 30 to December 31: 93.0% – 57.1% = 35.9%
EI percentage January 1 to June 30: 57.1% - 0.0% = 57.1%
Total EI percentage for 1 year duration: 35.9% + 57.1% = 93.0%
EI percentage June 30 to November 1 (0.333 year): 69.4% - 57.1% = 12.3%
Figure 4 – Isoerodent Map of California:
Interpolated annual erosion index for location: 25

R-Factor for 1 year construction: 25 x (93.0%) = 23.25
R-Factor for 0.333 year construction: 25 x (12.3%) = 3.075
R-Factor for complete project duration (1.333 years) = 23.25 + 3.075 = 26.325

Figure 1. Erosivity Index Zone Map

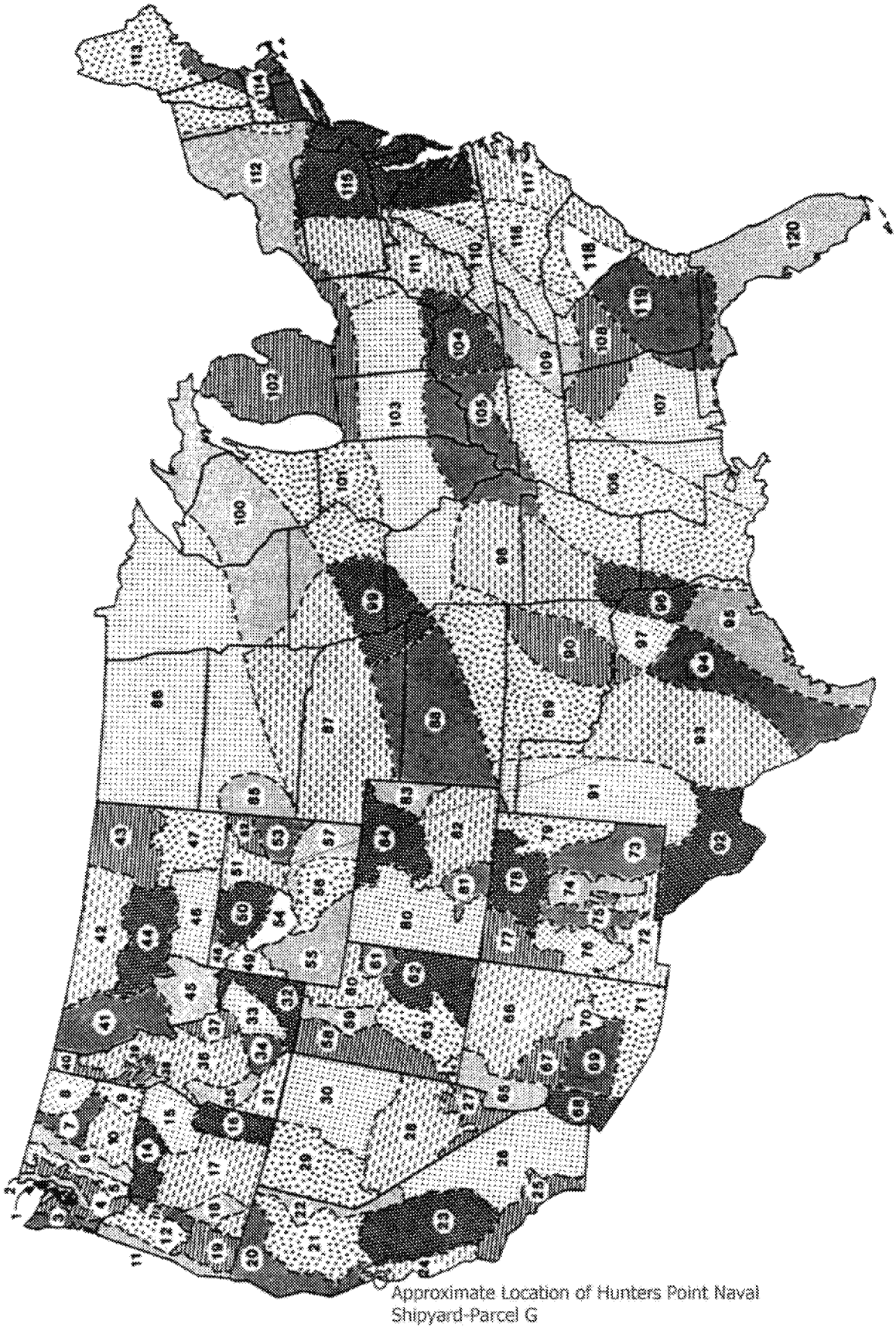

Figure 4. Isoerodent Map of California

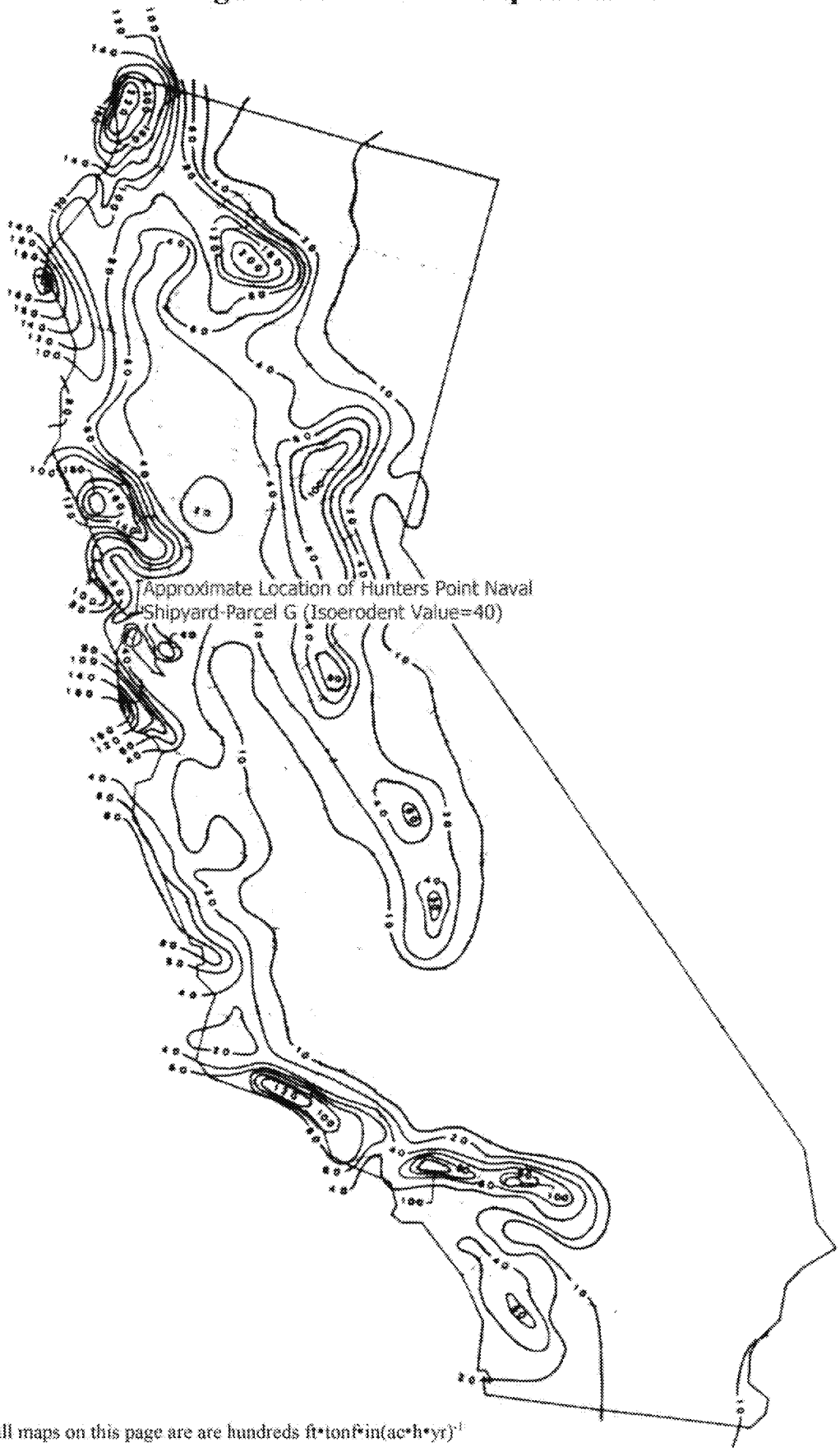

Note: Units for all maps on this page are are hundreds ft•tonf•in(ac•h•yr)$^{-1}$

Table 1. Erosivity Index Table

EI as a percentage of Average Annual R Value Computed for Geographic Areas Shown in Figure 1

EI#	Jan 1-15	Jan 16-31	Feb 1-15	Feb 16-29	Mar 1-15	Mar 16-31	Apr 1-15	Apr 16-30	May 1-15	May 16-31	Jun 1-15	Jun 16-30	Jul 1-15	Jul 16-31	Aug 1-15	Aug 16-31	Sep 1-15	Sep 16-31	Oct 1-15	Oct 16-31	Nov 1-15	Nov 16-31	Dec 1-15	Dec 16-31
1	0.0	4.3	8.3	12.8	17.3	21.6	25.1	28.0	30.9	34.9	39.1	42.6	45.4	48.2	50.8	53.0	56.0	60.8	66.8	71.0	75.7	82.0	89.1	95.2
2	0.0	4.3	8.3	12.8	17.3	21.6	25.1	28.0	30.9	34.9	39.1	42.6	45.4	48.2	50.8	53.0	56.0	60.8	66.8	71.0	75.7	82.0	89.1	95.2
3	0.0	7.4	13.8	20.9	26.5	31.8	35.3	38.5	40.2	41.6	42.5	43.6	44.5	45.1	45.7	46.4	47.7	49.4	52.8	57.0	64.5	73.1	83.3	92.3
4	0.0	3.9	7.9	12.6	17.4	21.6	25.2	28.7	31.9	35.1	38.2	42.0	44.9	46.7	48.2	50.1	53.1	56.6	62.2	67.9	75.2	83.5	90.5	96.0
5	0.0	2.3	3.6	4.7	6.0	7.7	10.7	13.9	17.8	21.2	24.5	28.1	31.1	33.1	35.3	38.2	43.2	48.7	57.3	67.8	77.9	86.0	91.3	96.9
6	0.0	0.0	0.0	0.5	2.0	4.1	8.1	12.6	17.6	21.6	25.5	29.6	34.5	40.0	45.7	50.7	55.6	60.2	66.5	75.5	85.6	95.9	99.5	99.9
7	0.0	0.0	0.0	0.0	0.0	1.2	4.9	8.5	13.9	19.0	26.1	35.4	43.9	48.8	53.9	64.5	73.4	77.5	80.4	84.8	89.9	96.6	99.2	99.7
8	0.0	0.0	0.0	0.0	0.0	0.9	3.6	7.8	15.0	20.2	27.4	38.1	49.8	57.9	65.0	75.6	82.7	86.8	89.4	93.4	96.3	99.1	100.0	100.0
9	0.0	0.8	3.1	4.7	7.4	11.7	17.8	22.5	27.0	31.4	36.0	41.6	46.4	50.1	53.4	57.4	61.7	64.9	69.7	79.0	89.6	97.4	100.0	100.0
10	0.0	0.3	0.5	0.9	2.0	4.3	9.2	13.1	18.0	22.7	29.2	39.5	46.3	48.8	51.1	57.2	64.4	67.7	71.1	77.2	85.1	92.5	96.5	99.0
11	0.0	5.4	11.3	18.8	26.3	33.2	37.4	40.7	42.5	44.3	45.4	46.5	47.1	47.4	47.8	48.3	49.4	50.7	53.6	57.5	65.5	76.2	87.4	94.8
12	0.0	3.5	7.8	14.0	21.1	27.4	31.5	35.0	37.3	39.8	41.9	44.3	45.6	46.3	46.8	47.9	50.0	52.9	57.9	62.3	69.3	81.3	91.5	96.7
13	0.0	0.0	0.0	1.8	7.2	11.9	16.7	19.7	24.0	31.2	42.4	55.0	60.0	60.8	61.2	62.6	65.3	67.6	71.6	76.1	83.1	93.3	98.2	99.6
14	0.0	0.7	1.8	3.3	6.9	16.5	26.6	29.9	32.0	35.4	40.2	45.1	51.9	61.1	67.5	70.7	72.8	75.4	78.6	81.9	86.4	93.6	97.7	99.3
15	0.0	0.0	0.0	0.5	2.0	4.4	8.7	12.0	16.6	21.4	29.7	44.5	56.0	60.8	63.9	69.1	74.5	79.1	83.1	87.0	90.9	96.6	99.1	99.8
16	0.0	0.0	0.0	0.5	2.0	5.5	12.3	16.2	20.9	26.4	35.2	48.1	58.1	63.1	66.5	71.9	77.0	81.6	85.1	88.4	91.5	96.3	98.7	99.6
17	0.0	0.0	0.0	0.7	2.8	6.1	10.7	12.9	16.1	21.9	32.8	45.9	55.5	60.3	64.0	71.2	77.2	80.3	83.1	87.7	92.6	97.2	99.1	99.8
18	0.0	0.0	0.0	0.6	2.5	6.2	12.4	16.4	20.2	23.9	29.3	37.7	45.6	49.8	53.3	58.4	64.3	69.0	75.0	86.6	93.9	96.6	98.0	100.0
19	0.0	1.0	2.6	7.4	16.4	23.5	28.0	31.0	33.5	37.0	41.7	48.1	51.1	52.0	52.5	53.6	55.7	57.6	61.1	65.8	74.7	88.0	95.8	98.7
20	0.0	9.8	18.5	25.4	30.2	35.6	38.9	41.5	42.9	44.0	45.2	48.2	50.8	51.7	52.5	54.6	57.4	58.5	60.1	63.2	69.6	76.7	85.4	92.4
21	0.0	7.5	13.6	18.1	21.1	24.4	27.0	29.4	31.7	34.6	37.3	39.6	41.6	43.4	45.4	48.1	51.3	53.3	56.6	62.4	72.4	81.3	88.9	94.7
22	0.0	1.2	1.6	1.6	1.6	1.6	1.6	2.2	3.9	4.6	6.4	14.2	32.8	47.2	58.8	69.1	76.0	82.0	87.1	96.7	99.9	99.9	99.9	99.9
23	0.0	7.9	15.0	20.9	25.7	31.1	35.7	40.2	43.2	46.2	47.7	48.8	49.4	49.9	50.7	51.8	54.1	57.7	62.8	65.9	70.1	77.3	86.8	93.5
24	0.0	12.2	23.6	33.0	39.7	47.1	51.7	55.9	57.7	58.6	58.9	59.1	59.1	59.2	59.2	59.3	59.5	60.0	61.4	63.0	66.5	71.8	81.3	89.6
25	0.0	9.8	20.8	30.2	37.6	45.6	50.6	54.4	56.0	56.8	57.1	57.1	57.2	57.6	58.5	59.8	62.2	65.3	67.5	68.2	69.4	74.8	86.6	93.0
26	0.0	2.0	5.4	9.8	15.6	21.5	24.7	26.6	27.4	28.0	28.7	29.8	32.5	36.6	44.9	55.4	65.7	72.6	77.8	84.4	89.5	93.9	96.5	98.4
27	0.0	0.0	0.0	1.0	4.0	5.9	8.0	11.1	13.0	14.0	14.6	15.3	17.0	23.2	39.1	60.0	76.3	86.1	89.7	90.4	90.9	93.1	96.6	99.1
28	0.0	0.0	0.0	0.0	0.2	0.5	1.5	3.3	7.2	11.9	17.7	21.4	27.0	37.1	51.4	62.3	70.6	78.8	84.6	90.6	94.4	97.9	99.3	100.0
29	0.0	0.6	0.7	0.7	0.7	1.5	3.9	6.0	10.5	17.9	28.8	36.6	43.8	51.5	59.3	68.0	74.8	80.3	84.3	88.8	92.7	96.0	99.8	99.9
30	0.0	0.0	0.0	0.0	0.0	0.2	0.8	2.8	7.9	14.2	24.7	35.6	45.4	52.2	58.7	68.5	77.6	84.5	88.9	93.7	96.2	97.6	98.3	99.6

ARCADIS

Appendix F

Construction Schedule

APPENDIX F - PRELIMINARY CONSTRUCTION SCHEDULE

	Status/Start Date	End Date
Site Preparation and Mobilization	Early January 2013	Late January 2013
Site Grading	Early February 2013	Early March 2013
Paving Operations	Mid February 2013	Mid April 2013
Building Foundation Repair, Secure Buildings	Late January 2013	Mid February 2013

ARCADIS

Appendix G

BMP Fact Sheets

Soil Binders

EC-5

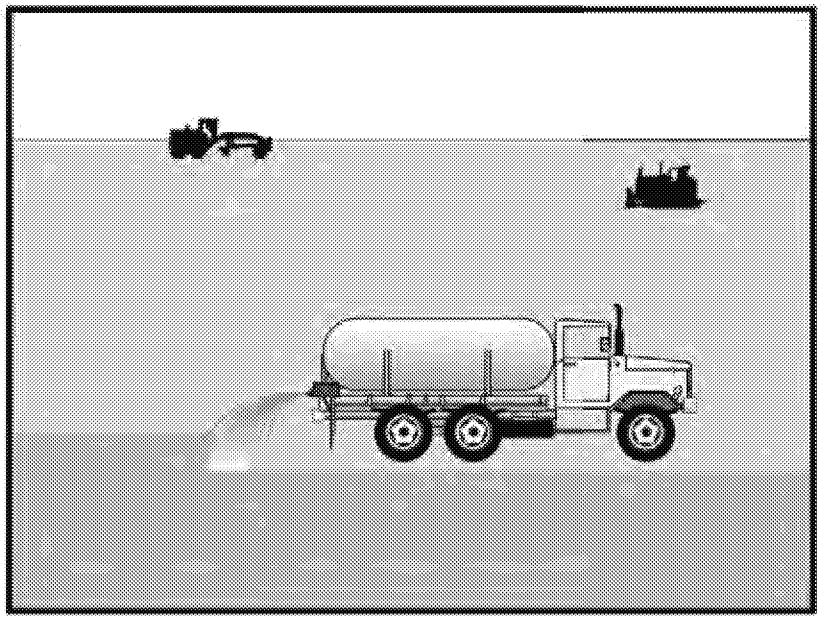

Objectives

EC	Erosion Control	☑
SE	Sediment Control	
TR	Tracking Control	
WE	Wind Erosion Control	☒
NS	Non-Stormwater Management Control	
WM	Waste Management and Materials Pollution Control	

Legend:

☑ **Primary Objective**

☒ **Secondary Objective**

Targeted Constituents

Sediment	☑
Nutrients	
Trash	
Metals	
Bacteria	
Oil and Grease	
Organics	

Potential Alternatives

EC-3 Hydraulic Mulch

EC-4 Hydroseeding

EC-6 Straw Mulch

EC-7 Geotextiles and Mats

EC-8 Wood Mulching

Description and Purpose

Soil binders consist of applying and maintaining a soil stabilizer to exposed soil surfaces. Soil binders are materials applied to the soil surface to temporarily prevent water induced erosion of exposed soils on construction sites. Soil binders also prevent wind erosion.

Suitable Applications

Soil binders are typically applied to disturbed areas requiring short term temporary protection. Because soil binders can often be incorporated into the work, they are a good alternative to mulches in areas where grading activities will soon resume. Soil binders are also suitable for use on stockpiles.

Limitations

- Soil binders are temporary in nature and may need reapplication.
- Soil binders require a minimum curing time until fully effective, as prescribed by the manufacturer. Curing time may be 24 hours or longer. Soil binders may need reapplication after a storm event.
- Soil binders will generally experience spot failures during heavy rainfall events. If runoff penetrates the soil at the top of a slope treated with a soil binder, it is likely that the runoff will underent the stabilized soil layer and discharge at a point further down slope.

ED_002781A_00003896-00838

- Soil binders do not hold up to pedestrian or vehicular traffic across treated areas.
- Soil binders may not penetrate soil surfaces made up primarily of silt and clay, particularly when compacted.
- Some soil binders may not perform well with low relative humidity. Under rainy conditions, some agents may become slippery or leach out of the soil.
- Soil binders may not cure if low temperatures occur within 24 hours of application.
- The water quality impacts of soil binders are relatively unknown and some may have water quality impacts due to their chemical makeup.
- A sampling and analysis plan must be incorporated into the SWPPP as soil binders could be a source of non-visible pollutants.

Implementation

General Considerations

- Regional soil types will dictate appropriate soil binders to be used.
- A soil binder must be environmentally benign (non-toxic to plant and animal life), easy to apply, easy to maintain, economical, and should not stain paved or painted surfaces. Soil binders should not pollute stormwater.
- Some soil binders may not be compatible with existing vegetation.
- Performance of soil binders depends on temperature, humidity, and traffic across treated areas.
- Avoid over spray onto roads, sidewalks, drainage channels, existing vegetation, etc.

Selecting a Soil Binder

Properties of common soil binders used for erosion control are provided on Table 1 at the end of this BMP. Use Table 1 to select an appropriate soil binder. Refer to WE-1, Wind Erosion Control, for dust control soil binders.

Factors to consider when selecting a soil binder include the following:

- Suitability to situation - Consider where the soil binder will be applied, if it needs a high resistance to leaching or abrasion, and whether it needs to be compatible with any existing vegetation. Determine the length of time soil stabilization will be needed, and if the soil binder will be placed in an area where it will degrade rapidly. In general, slope steepness is not a discriminating factor for the listed soil binders.
- Soil types and surface materials - Fines and moisture content are key properties of surface materials. Consider a soil binder's ability to penetrate, likelihood of leaching, and ability to form a surface crust on the surface materials.
- Frequency of application - The frequency of application can be affected by subgrade conditions, surface type, climate, and maintenance schedule. Frequent applications could

ED_002781A_00003896-00839

lead to high costs. Application frequency may be minimized if the soil binder has good penetration, low evaporation, and good longevity. Consider also that frequent application will require frequent equipment clean up.

Plant-Material Based (Short Lived) Binders

Guar: Guar is a non-toxic, biodegradable, natural galactomannan based hydrocolloid treated with dispersant agents for easy field mixing. It should be mixed with water at the rate of 11 to 15 lb per 1,000 gallons. Recommended minimum application rates are as follows:

Application Rates for Guar Soil Stabilizer

Slope (H:V):	Flat	4:1	3:1	2:1	1:1
lb/acre:	40	45	50	60	70

Psyllium: Psyllium is composed of the finely ground muciloid coating of plantago seeds that is applied as a dry powder or in a wet slurry to the surface of the soil. It dries to form a firm but rewettable membrane that binds soil particles together but permits germination and growth of seed. Psyllium requires 12 to 18 hours drying time. Application rates should be from 80 to 200 lb/acre, with enough water in solution to allow for a uniform slurry flow.

Starch: Starch is non-ionic, cold water soluble (pre-gelatinized) granular cornstarch. The material is mixed with water and applied at the rate of 150 lb/acre. Approximate drying time is 9 to 12 hours.

Plant-Material Based (Long Lived) Binders

Pitch and Rosin Emulsion: Generally, a non-ionic pitch and rosin emulsion has a minimum solids content of 48%. The rosin should be a minimum of 26% of the total solids content. The soil stabilizer should be non-corrosive, water dilutable emulsion that upon application cures to a water insoluble binding and cementing agent. For soil erosion control applications, the emulsion is diluted and should be applied as follows:

- For clayey soil: 5 parts water to 1 part emulsion
- For sandy soil: 10 parts water to 1 part emulsion

Application can be by water truck or hydraulic seeder with the emulsion and product mixture applied at the rate specified by the manufacturer.

Polymeric Emulsion Blend Binders

Acrylic Copolymers and Polymers: Polymeric soil stabilizers should consist of a liquid or solid polymer or copolymer with an acrylic base that contains a minimum of 55% solids. The polymeric compound should be handled and mixed in a manner that will not cause foaming or should contain an anti-foaming agent. The polymeric emulsion should not exceed its shelf life or expiration date; manufacturers should provide the expiration date. Polymeric soil stabilizer should be readily miscible in water, non-injurious to seed or animal life, non-flammable, should provide surface soil stabilization for various soil types without totally inhibiting water infiltration, and should not re-emulsify when cured. The applied compound should air cure within a maximum of 36 to 48 hours. Liquid copolymer should be diluted at a rate of 10 parts water to 1 part polymer and the mixture applied to soil at a rate of 1,175 gallons/acre.

ED_002781A_00003896-00840

Liquid Polymers of Methacrylates and Acrylates: This material consists of a tackifier/sealer that is a liquid polymer of methacrylates and acrylates. It is an aqueous 100% acrylic emulsion blend of 40% solids by volume that is free from styrene, acetate, vinyl, ethoxylated surfactants or silicates. For soil stabilization applications, it is diluted with water in accordance with manufacturer's recommendations, and applied with a hydraulic seeder at the rate of 20 gallons/acre. Drying time is 12 to 18 hours after application.

Copolymers of Sodium Acrylates and Acrylamides: These materials are non-toxic, dry powders that are copolymers of sodium acrylate and acrylamide. They are mixed with water and applied to the soil surface for erosion control at rates that are determined by slope gradient:

Slope Gradient (H:V)	lb/acre
Flat to 5:1	3.0 – 5.0
5:1 to 3:1	5.0 – 10.0
2:2 to 1:1	10.0 – 20.0

Poly-Acrylamide and Copolymer of Acrylamide: Linear copolymer polyacrylamide is packaged as a dry flowable solid. When used as a stand alone stabilizer, it is diluted at a rate of 11lb/1,000 gal of water and applied at the rate of 5.0 lb/acre.

Hydro-Colloid Polymers: Hydro-Colloid Polymers are various combinations of dry flowable poly-acrylamides, copolymers and hydro-colloid polymers that are mixed with water and applied to the soil surface at rates of 55 to 60 lb/acre. Drying times are 0 to 4 hours.

Cementitious-Based Binders

Gypsum: This is a formulated gypsum based product that readily mixes with water and mulch to form a thin protective crust on the soil surface. It is composed of high purity gypsum that is ground, calcined and processed into calcium sulfate hemihydrate with a minimum purity of 86%. It is mixed in a hydraulic seeder and applied at rates 4,000 to 12,000 lb/acre. Drying time is 4 to 8 hours.

Applying Soil Binders

After selecting an appropriate soil binder, the untreated soil surface must be prepared before applying the soil binder. The untreated soil surface must contain sufficient moisture to assist the agent in achieving uniform distribution. In general, the following steps should be followed:

- Follow manufacturer's written recommendations for application rates, pre-wetting of application area, and cleaning of equipment after use.
- Prior to application, roughen embankment and fill areas.
- Consider the drying time for the selected soil binder and apply with sufficient time before anticipated rainfall. Soil binders should not be applied during or immediately before rainfall.
- Avoid over spray onto roads, sidewalks, drainage channels, sound walls, existing vegetation, etc.

ED_002781A_00003896-00841

- Soil binders should not be applied to frozen soil, areas with standing water, under freezing or rainy conditions, or when the temperature is below 40°F during the curing period.
- More than one treatment is often necessary, although the second treatment may be diluted or have a lower application rate.
- Generally, soil binders require a minimum curing time of 24 hours before they are fully effective. Refer to manufacturer's instructions for specific cure time.
- For liquid agents:
  - Crown or slope ground to avoid ponding.
  - Uniformly pre-wet ground at 0.03 to 0.3 gal/yd² or according to manufacturer's recommendations.
  - Apply solution under pressure. Overlap solution 6 to 12 in.
  - Allow treated area to cure for the time recommended by the manufacturer; typically at least 24 hours.
  - Apply second treatment before first treatment becomes ineffective, using 50% application rate.
  - In low humidities, reactivate chemicals by re-wetting with water at 0.1 to 0.2 gal/yd².

Costs

Costs vary according to the soil stabilizer selected for implementation. The following are approximate costs:

Soil Binder	Cost per Acre
Plant-Material Based (Short Lived) Binders	$400
Plant-Material Based (Long Lived) Binders	$1,200
Polymeric Emulsion Blend Binders	$400 (1)
Cementitious-Based Binders	$800

(1) $1,200 for Acrylic polymers and copolymers

Source: Caltrans Guidance for Soil Stabilization for Temporary Slopes, Nov. 1999

Inspection and Maintenance

- Inspect BMPs prior to forecast rain, daily during extended rain events, after rain events, weekly during the rainy season, and at two-week intervals during the non-rainy season.
- Areas where erosion is evident shall be repaired and BMPs re-applied as soon as possible. Care should be exercised to minimize the damage to protected areas while making repairs, as any area damaged will require re-application of BMPs.
- Reapply the selected soil binder as needed to maintain effectiveness.

ED_002781A_00003896-00842

References

Manual of Standards of Erosion and Sediment Control Measures, Association of Bay Area Governments, May 1995.

Sedimentation and Erosion Control, An Inventory of Current Practices Draft, US EPA, April 1990.

Stormwater Quality Handbooks Construction Site Best Management Practices (BMPs) Manual, State of California Department of Transportation (Caltrans), November 2000.

Guidance Document: Soil Stabilization for Temporary Slopes, State of California Department of Transportation (Caltrans), November 1999.

Stormwater Management for Construction Activities, Developing Pollution Prevention Plans and Best Management Practices, EPA 832-R-92005; USEPA, April 1992.

ED_002781A_00003896-00843

Earth Dikes and Drainage Swales EC-9

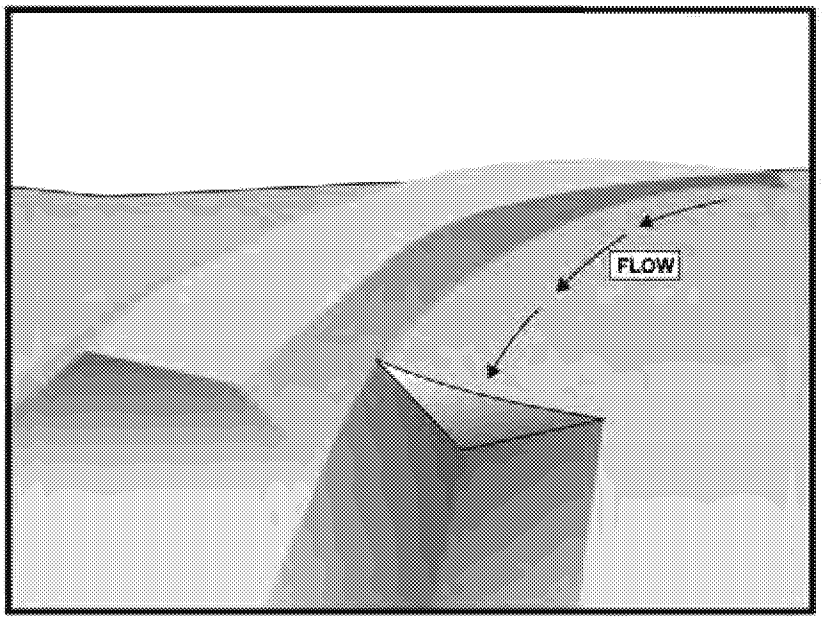

Objectives

EC	Erosion Control	☑
SE	Sediment Control	
TR	Tracking Control	
WE	Wind Erosion Control	
NS	Non-Stormwater Management Control	
WM	Waste Management and Materials Pollution Control	

Legend:

☑ **Primary Objective**

☒ **Secondary Objective**

Targeted Constituents

Sediment	☑
Nutrients	
Trash	
Metals	
Bacteria	
Oil and Grease	
Organics	

Potential Alternatives

None

Description and Purpose

An earth dike is a temporary berm or ridge of compacted soil used to divert runoff or channel water to a desired location. A drainage swale is a shaped and sloped depression in the soil surface used to convey runoff to a desired location. Earth dikes and drainage swales are used to divert off site runoff around the construction site, divert runoff from stabilized areas and disturbed areas, and direct runoff into sediment basins or traps.

Suitable Applications

Earth dikes and drainage swales are suitable for use, individually or together, where runoff needs to be diverted from one area and conveyed to another.

- Earth dikes and drainage swales may be used:
  - To convey surface runoff down sloping land
  - To intercept and divert runoff to avoid sheet flow over sloped surfaces
  - To divert and direct runoff towards a stabilized watercourse, drainage pipe or channel
  - To intercept runoff from paved surfaces
  - Below steep grades where runoff begins to concentrate
  - Along roadways and facility improvements subject to flood drainage

ED_002781A_00003896-00844

- At the top of slopes to divert runon from adjacent or undisturbed slopes
- At bottom and mid slope locations to intercept sheet flow and convey concentrated flows
- Divert sediment laden runoff into sediment basins or traps

Limitations

Dikes should not be used for drainage areas greater than 10 acres or along slopes greater than 10 percent. For larger areas more permanent drainage structures should be built. All drainage structures should be built in compliance with local municipal requirements.

- Earth dikes may create more disturbed area on site and become barriers to construction equipment.
- Earth dikes must be stabilized immediately, which adds cost and maintenance concerns.
- Diverted stormwater may cause downstream flood damage.
- Dikes should not be constructed of soils that may be easily eroded.
- Regrading the site to remove the dike may add additional cost.
- Temporary drains and swales or any other diversion of runoff should not adversely impact upstream or downstream properties.
- Temporary drains and swales must conform to local floodplain management requirements.
- Earth dikes/drainage swales are not suitable as sediment trapping devices.
- It may be necessary to use other soil stabilization and sediment controls such as check dams, plastics, and blankets, to prevent scour and erosion in newly graded dikes, swales, and ditches.

Implementation

The temporary earth dike is a berm or ridge of compacted soil, located in such a manner as to divert stormwater to a sediment trapping device or a stabilized outlet, thereby reducing the potential for erosion and offsite sedimentation. Earth dikes can also be used to divert runoff from off site and from undisturbed areas away from disturbed areas and to divert sheet flows away from unprotected slopes.

An earth dike does not itself control erosion or remove sediment from runoff. A dike prevents erosion by directing runoff to an erosion control device such as a sediment trap or directing runoff away from an erodible area. Temporary diversion dikes should not adversely impact adjacent properties and must conform to local floodplain management regulations, and should not be used in areas with slopes steeper than 10%.

Slopes that are formed during cut and fill operations should be protected from erosion by runoff. A combination of a temporary drainage swale and an earth dike at the top of a slope can divert runoff to a location where it can be brought to the bottom of the slope (see EC-11, Slope Drains). A combination dike and swale is easily constructed by a single pass of a bulldozer or grader and

ED_002781A_00003896-00845

compacted by a second pass of the tracks or wheels over the ridge. Diversion structures should be installed when the site is initially graded and remain in place until post construction BMPs are installed and the slopes are stabilized.

Diversion practices concentrate surface runoff, increasing its velocity and erosive force. Thus, the flow out of the drain or swale must be directed onto a stabilized area or into a grade stabilization structure. If significant erosion will occur, a swale should be stabilized using vegetation, chemical treatment, rock rip-rap, matting, or other physical means of stabilization. Any drain or swale that conveys sediment laden runoff must be diverted into a sediment basin or trap before it is discharged from the site.

General

- Care must be applied to correctly size and locate earth dikes, drainage swales. Excessively steep, unlined dikes, and swales are subject to erosion and gully formation.
- Conveyances should be stabilized.
- Use a lined ditch for high flow velocities.
- Select flow velocity based on careful evaluation of the risks due to erosion of the measure, soil types, overtopping, flow backups, washout, and drainage flow patterns for each project site.
- Compact any fills to prevent unequal settlement.
- Do not divert runoff onto other property without securing written authorization from the property owner.
- When possible, install and utilize permanent dikes, swales, and ditches early in the construction process.
- Provide stabilized outlets.

Earth Dikes

Temporary earth dikes are a practical, inexpensive BMP used to divert stormwater runoff. Temporary diversion dikes should be installed in the following manner:

- All dikes should be compacted by earth moving equipment.
- All dikes should have positive drainage to an outlet.
- All dikes should have 2:1 or flatter side slopes, 18 in. minimum height, and a minimum top width of 24 in. Wide top widths and flat slopes are usually needed at crossings for construction traffic.
- The outlet from the earth dike must function with a minimum of erosion. Runoff should be conveyed to a sediment trapping device such as a Sediment Trap (SE-3) or Sediment Basin (SE-2) when either the dike channel or the drainage area above the dike are not adequately stabilized.

ED_002781A_00003896-00846

- Temporary stabilization may be achieved using seed and mulching for slopes less than 5% and either rip-rap or sod for slopes in excess of 5%. In either case, stabilization of the earth dike should be completed immediately after construction or prior to the first rain.
- If riprap is used to stabilize the channel formed along the toe of the dike, the following typical specifications apply:

Channel Grade	Riprap Stabilization
0.5-1.0%	4 in. Rock
1.1-2.0%	6 in. Rock
2.1-4.0%	8 in. Rock
4.1-5.0%	8 in. -12 in. Riprap

- The stone riprap, recycled concrete, etc. used for stabilization should be pressed into the soil with construction equipment.
- Filter cloth may be used to cover dikes in use for long periods.
- Construction activity on the earth dike should be kept to a minimum.

Drainage Swales

Drainage swales are only effective if they are properly installed. Swales are more effective than dikes because they tend to be more stable. The combination of a swale with a dike on the downhill side is the most cost effective diversion.

Standard engineering design criteria for small open channel and closed conveyance systems should be used (see the local drainage design manual). Unless local drainage design criteria state otherwise, drainage swales should be designed as follows:

- No more than 5 acres may drain to a temporary drainage swale.
- Place drainage swales above or below, not on, a cut or fill slope.
- Swale bottom width should be at least 2 ft
- Depth of the swale should be at least 18 in.
- Side slopes should be 2:1 or flatter.
- Drainage or swales should be laid at a grade of at least 1 percent, but not more than 15 percent.
- The swale must not be overtopped by the peak discharge from a 10-year storm, irrespective of the design criteria stated above.
- Remove all trees, stumps, obstructions, and other objectionable material from the swale when it is built.
- Compact any fill material along the path of the swale.

ED_002781A_00003896-00847

- Stabilize all swales immediately. Seed and mulch swales at a slope of less than 5 percent, and use rip-rap or sod for swales with a slope between 5 and 15 percent. For temporary swales, geotextiles and mats (EC-7) may provide immediate stabilization.
- Irrigation may be required to establish sufficient vegetation to prevent erosion.
- Do not operate construction vehicles across a swale unless a stabilized crossing is provided.
- Permanent drainage facilities must be designed by a professional engineer (see the local drainage design criteria for proper design).
- At a minimum, the drainage swale should conform to predevelopment drainage patterns and capacities.
- Construct the drainage swale with a positive grade to a stabilized outlet.
- Provide erosion protection or energy dissipation measures if the flow out of the drainage swale can reach an erosive velocity.

Costs

- Cost ranges from $15 to $55 per ft for both earthwork and stabilization and depends on availability of material, site location, and access.
- Small dikes: $2.50 - $6.50/linear ft; Large dikes: $2.50/yd^3.
- The cost of a drainage swale increases with drainage area and slope. Typical swales for controlling internal erosion are inexpensive, as they are quickly formed during routine earthwork.

Inspection and Maintenance

- Inspect BMPs prior to forecast rain, daily during extended rain events, after rain events, weekly during the rainy season, and at two-week intervals during the non-rainy season.
- Inspect BMPs subject to non-stormwater discharges daily while non-stormwater discharges occur.
- Inspect ditches and berms for washouts. Replace lost riprap, damaged linings or soil stabilizers as needed.
- Inspect channel linings, embankments, and beds of ditches and berms for erosion and accumulation of debris and sediment. Remove debris and sediment and repair linings and embankments as needed.
- Temporary conveyances should be completely removed as soon as the surrounding drainage area has been stabilized or at the completion of construction

References

Erosion and Sediment Control Handbook, S.J. Goldman, K. Jackson, T.A. Bursetynsky, P.E., McGraw Hill Book Company, 1986.

ED_002781A_00003896-00848

Manual of Standards of Erosion and Sediment Control Measures, Association of Bay Area Governments, May 1995.

National Association of Home Builders (NAHB). Stormwater Runoff & Nonpoint Source Pollution Control Guide for Builders and Developers. National Association of Home Builders, Washington, D.C., 1995

National Management Measures to Control Nonpoint Source Pollution from Urban Areas, United States Environmental Protection Agency, 2002.

Southeastern Wisconsin Regional Planning Commission (SWRPC). Costs of Urban Nonpoint Source Water Pollution Control Measures. Technical Report No. 31. Southeastern Wisconsin Regional Planning Commission, Waukesha, WI. 1991

Stormwater Quality Handbooks Construction Site Best Management Practices (BMPs) Manual, State of California Department of Transportation (Caltrans), November 2000.

Stormwater Management of the Puget Sound Basin, Technical Manual, Publication #91-75, Washington State Department of Ecology, February 1992.

Water Quality Management Plan for the Lake Tahoe Region, Volume II, Handbook of Management Practices, Tahoe Regional Planning Agency, November 1988.

ED_002781A_00003896-00849

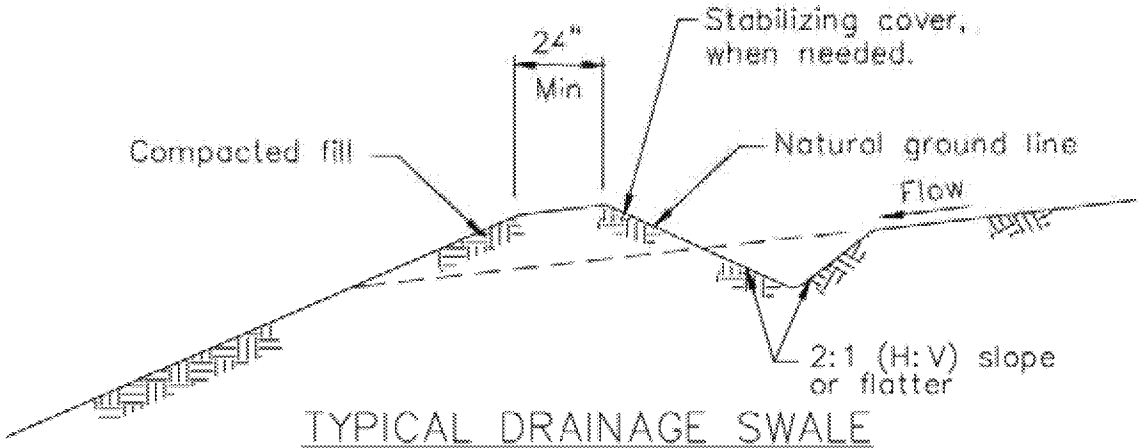

TYPICAL DRAINAGE SWALE
NOT TO SCALE

NOTES:

1. Stabilize inlet, outlets and slopes.
2. Properly compact the subgrade.

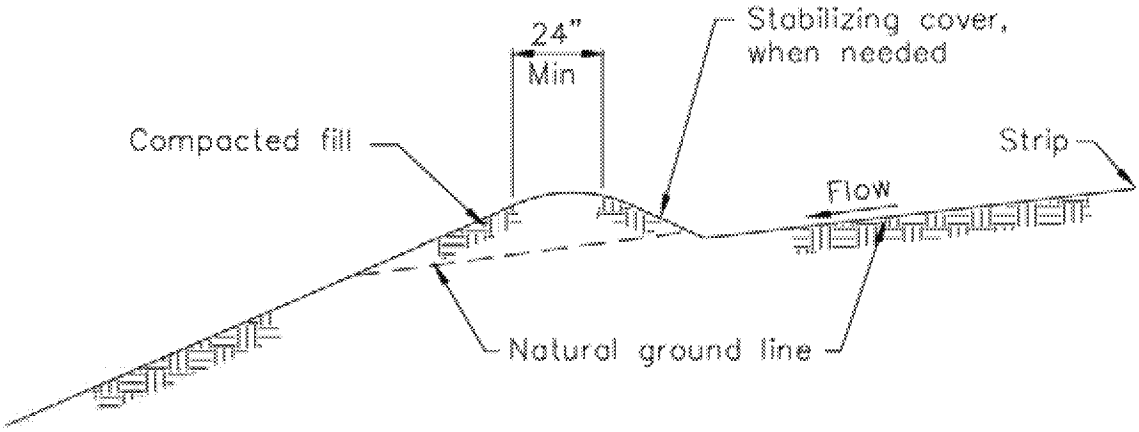

TYPICAL EARTH DIKE
NOT TO SCALE

ED_002781A_00003896-00850

Silt Fence SE-1

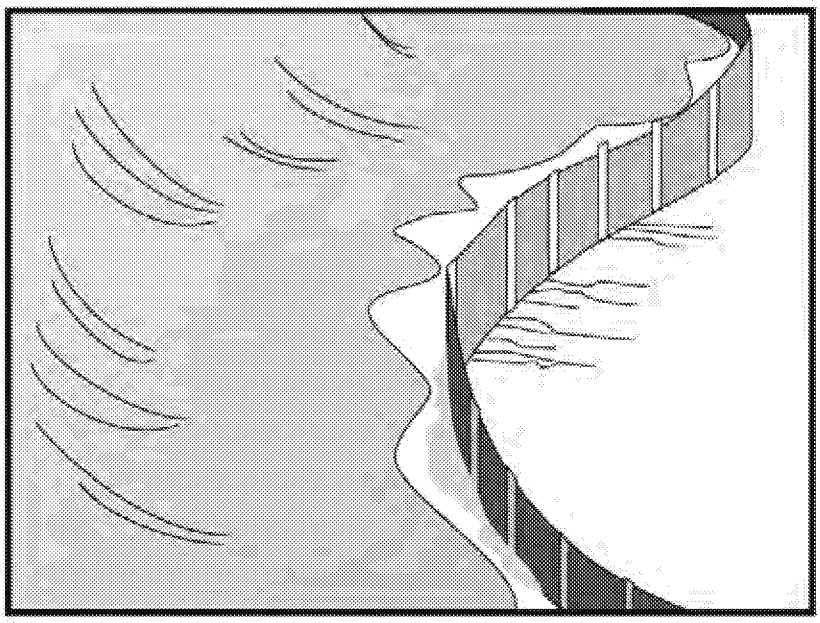

Objectives

EC	Erosion Control	☑
SE	Sediment Control	
TR	Tracking Control	
WE	Wind Erosion Control	
NS	Non-Stormwater Management Control	
WM	Waste Management and Materials Pollution Control	

Legend:

☑ **Primary Objective**

☒ **Secondary Objective**

Targeted Constituents

Sediment	☑
Nutrients	
Trash	
Metals	
Bacteria	
Oil and Grease	
Organics	

Potential Alternatives

SE-5 Fiber Rolls

SE-6 Gravel Bag Berm

SE-8 Sandbag Barrier

SE-9 Straw Bale Barrier

Description and Purpose

A silt fence is made of a filter fabric that has been entrenched, attached to supporting poles, and sometimes backed by a plastic or wire mesh for support. The silt fence detains sediment-laden water, promoting sedimentation behind the fence.

Suitable Applications

Silt fences are suitable for perimeter control, placed below areas where sheet flows discharge from the site. They should also be used as interior controls below disturbed areas where runoff may occur in the form of sheet and rill erosion. Silt fences are generally ineffective in locations where the flow is concentrated and are only applicable for sheet or overland flows. Silt fences are most effective when used in combination with erosion controls. Suitable applications include:

- Along the perimeter of a project.
- Below the toe or down slope of exposed and erodible slopes.
- Along streams and channels.
- Around temporary spoil areas and stockpiles.
- Below other small cleared areas.

Limitations

- Do not use in streams, channels, drain inlets, or anywhere flow is concentrated.

ED_002781A_00003896-00851

- Do not use in locations where ponded water may cause flooding.
- Do not place fence on a slope, or across any contour line. If not installed at the same elevation throughout, silt fences will create erosion.
- Filter fences will create a temporary sedimentation pond on the upstream side of the fence and may cause temporary flooding. Fences not constructed on a level contour will be overtopped by concentrated flow resulting in failure of the filter fence.
- Improperly installed fences are subject to failure from undercutting, overlapping, or collapsing.
  - Not effective unless trenched and keyed in.
  - Not intended for use as mid-slope protection on slopes greater than 4:1 (H:V).
  - Do not allow water depth to exceed 1.5 ft at any point.

Implementation

General

A silt fence is a temporary sediment barrier consisting of filter fabric stretched across and attached to supporting posts, entrenched, and, depending upon the strength of fabric used, supported with plastic or wire mesh fence. Silt fences trap sediment by intercepting and detaining small amounts of sediment-laden runoff from disturbed areas in order to promote sedimentation behind the fence.

Silt fences are preferable to straw bale barriers in many cases. Laboratory work at the Virginia Highway and Transportation Research Council has shown that silt fences can trap a much higher percentage of suspended sediments than can straw bales. While the failure rate of silt fences is lower than that of straw bale barriers, there are many instances where silt fences have been improperly installed. The following layout and installation guidance can improve performance and should be followed:

- Use principally in areas where sheet flow occurs.
- Don't use in streams, channels, or anywhere flow is concentrated. Don't use silt fences to divert flow.
- Don't use below slopes subject to creep, slumping, or landslides.
- Select filter fabric that retains 85% of soil by weight, based on sieve analysis, but that is not finer than an equivalent opening size of 70.
- Install along a level contour, so water does not pond more than 1.5 ft at any point along the silt fence.
- The maximum length of slope draining to any point along the silt fence should be 200 ft or less.
- The maximum slope perpendicular to the fence line should be 1:1.

ED_002781A_00003896-00852

- Provide sufficient room for runoff to pond behind the fence and to allow sediment removal equipment to pass between the silt fence and toes of slopes or other obstructions. About 1200 ft^2 of ponding area should be provided for every acre draining to the fence.
- Turn the ends of the filter fence uphill to prevent stormwater from flowing around the fence.
- Leave an undisturbed or stabilized area immediately down slope from the fence where feasible.
- Silt fences should remain in place until the disturbed area is permanently stabilized.

Design and Layout

Selection of a filter fabric is based on soil conditions at the construction site (which affect the equivalent opening size (EOS) fabric specification) and characteristics of the support fence (which affect the choice of tensile strength). The designer should specify a filter fabric that retains the soil found on the construction site yet that it has openings large enough to permit drainage and prevent clogging. The following criteria is recommended for selection of the equivalent opening size:

1. If 50 percent or less of the soil, by weight, will pass the U.S. Standard Sieve No. 200, select the EOS to retain 85 % of the soil. The EOS should not be finer than EOS 70.
2. For all other soil types, the EOS should be no larger than the openings in the U.S. Standard Sieve No. 70 except where direct discharge to a stream, lake, or wetland will occur, then the EOS should be no larger than Standard Sieve No. 100.

To reduce the chance of clogging, it is preferable to specify a fabric with openings as large as allowed by the criteria. No fabric should be specified with an EOS smaller than U.S. Standard Sieve No. 100. If 85% or more of a soil, by weight, passes through the openings in a No. 200 sieve, filter fabric should not be used. Most of the particles in such a soil would not be retained if the EOS was too large and they would clog the fabric quickly if the EOS were small enough to capture the soil.

The fence should be supported by a plastic or wire mesh if the fabric selected does not have sufficient strength and bursting strength characteristics for the planned application (as recommended by the fabric manufacturer). Filter fabric material should contain ultraviolet inhibitors and stabilizers to provide a minimum of six months of expected usable construction life at a temperature range of 0 °F to 120 °F.

- Layout in accordance with attached figures.
- For slopes steeper than 2:1 (H:V) and that contain a high number of rocks or large dirt clods that tend to dislodge, it may be necessary to install additional protection immediately adjacent to the bottom of the slope, prior to installing silt fence. Additional protection may be a chain link fence or a cable fence.
- For slopes adjacent to sensitive receiving waters or Environmentally Sensitive Areas (ESAs), silt fence should be used in conjunction with erosion control BMPs.

ED_002781A_00003896-00853

Materials

- Silt fence fabric should be woven polypropylene with a minimum width of 36 in. and a minimum tensile strength of 100 lb force. The fabric should conform to the requirements in ASTM designation D4632 and should have an integral reinforcement layer. The reinforcement layer should be a polypropylene, or equivalent, net provided by the manufacturer. The permittivity of the fabric should be between 0.1 sec^{-1} and 0.15 sec^{-1} in conformance with the requirements in ASTM designation D4491.

- Wood stakes should be commercial quality lumber of the size and shape shown on the plans. Each stake should be free from decay, splits or cracks longer than the thickness of the stake or other defects that would weaken the stakes and cause the stakes to be structurally unsuitable.

- Staples used to fasten the fence fabric to the stakes should be not less than 1.75 in. long and should be fabricated from 15 gauge or heavier wire. The wire used to fasten the tops of the stakes together when joining two sections of fence should be 9 gauge or heavier wire. Galvanizing of the fastening wire will not be required.

- There are new products that may use prefabricated plastic holders for the silt fence and use bar reinforcement instead of wood stakes. If bar reinforcement is used in lieu of wood stakes, use number four or greater bar. Provide end protection for any exposed bar reinforcement.

Installation Guidelines

Silt fences are to be constructed on a level contour. Sufficient area should exist behind the fence for ponding to occur without flooding or overtopping the fence.

- A trench should be excavated approximately 6 in. wide and 6 in. deep along the line the proposed silt fence.

- Bottom of the silt fence should be keyed-in a minimum of 12 in.

- Posts should be spaced a maximum of 6 ft apart and driven securely into the ground a minimum of 18 in. or 12 in. below the bottom of the trench.

- When standard strength filter fabric is used, a plastic or wire mesh support fence should be fastened securely to the upslope side of posts using heavy–duty wire staples at least 1 in. long. The mesh should extend into the trench. When extra-strength filter fabric and closer post spacing are used, the mesh support fence may be eliminated. Filter fabric should be purchased in a long roll, then cut to the length of the barrier. When joints are necessary, filter cloth should be spliced together only at a support post, with a minimum 6 in. overlap and both ends securely fastened to the post.

- The trench should be backfilled with compacted native material.

- Construct silt fences with a setback of at least 3 ft from the toe of a slope. Where a silt fence is determined to be not practicable due to specific site conditions, the silt fence may be constructed at the toe of the slope, but should be constructed as far from the toe of the slope as practicable. Silt fences close to the toe of the slope will be less effective and difficult to maintain.

ED_002781A_00003896-00854

- Construct the length of each reach so that the change in base elevation along the reach does not exceed 1/3 the height of the barrier; in no case should the reach exceed 500 ft.

Costs

- Average annual cost for installation and maintenance (assumes 6 month useful life): $7 per lineal foot ($850 per drainage acre). Range of cost is $3.50 - $9.10 per lineal foot.

Inspection and Maintenance

- Inspect BMPs prior to forecast rain, daily during extended rain events, after rain events, weekly during the rainy season, and at two-week intervals during the non-rainy season.
- Repair undercut silt fences.
- Repair or replace split, torn, slumping, or weathered fabric. The lifespan of silt fence fabric is generally 5 to 8 months.
- Silt fences that are damaged and become unsuitable for the intended purpose should be removed from the site of work, disposed of, and replaced with new silt fence barriers.
- Sediment that accumulates in the BMP must be periodically removed in order to maintain BMP effectiveness. Sediment should be removed when the sediment accumulation reaches one-third of the barrier height. Sediment removed during maintenance may be incorporated into earthwork on the site or disposed at an appropriate location.
- Silt fences should be left in place until the upstream area is permanently stabilized. Until then, the silt fence must be inspected and maintained.
- Holes, depressions, or other ground disturbance caused by the removal of the silt fences should be backfilled and repaired.

References

Manual of Standards of Erosion and Sediment Control Measures, Association of Bay Area Governments, May 1995.

National Management Measures to Control Nonpoint Source Pollution from Urban Areas, United States Environmental Protection Agency, 2002.

Proposed Guidance Specifying Management Measures for Sources of Nonpoint Pollution in Coastal Waters, Work Group-Working Paper, USEPA, April 1992.

Sedimentation and Erosion Control Practices, and Inventory of Current Practices (Draft), UESPA, 1990.

Southeastern Wisconsin Regional Planning Commission (SWRPC). Costs of Urban Nonpoint Source Water Pollution Control Measures. Technical Report No. 31. Southeastern Wisconsin Regional Planning Commission, Waukesha, WI. 1991

Stormwater Quality Handbooks - Construction Site Best Management Practices (BMPs) Manual, State of California Department of Transportation (Caltrans), November 2000.

ED_002781A_00003896-00855

Stormwater Management Manual for The Puget Sound Basin, Washington State Department of Ecology, Public Review Draft, 1991.

U.S. Environmental Protection Agency (USEPA). Stormwater Management for Industrial Activities: Developing Pollution Prevention Plans and Best Management Practices. U.S. Environmental Protection Agency, Office of Water, Washington, DC, 1992.

Water Quality Management Plan for the Lake Tahoe Region, Volume II, Handbook of Management Practices, Tahoe Regional Planning Agency, November 1988.

ED_002781A_00003896-00856

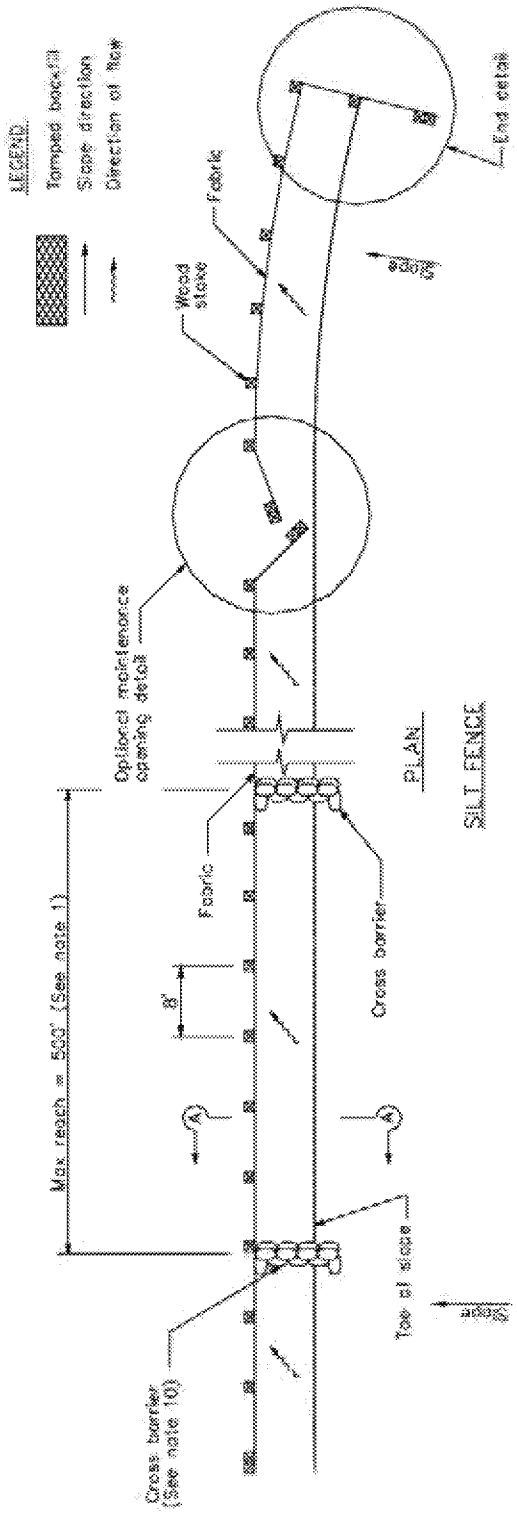

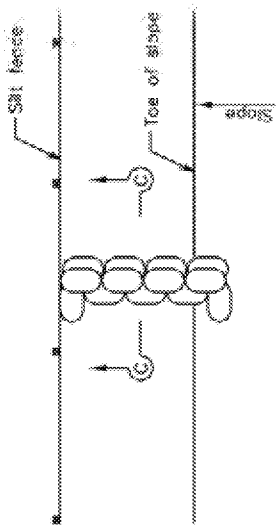

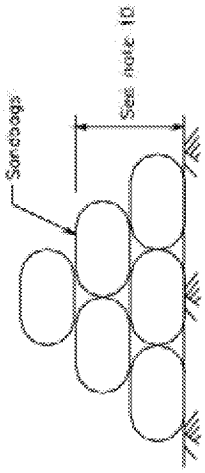

NOTES

1. Construct the length of each reach so that the change in base elevation along the reach does not exceed 1/3 the height of the fence barrier, in no case shall the reach length exceed 500'.
2. The last 8'–0" of fence shall be turned up slope.
3. Stake dimensions are nominal.
4. Dimension may vary to fit field condition.
5. Stakes shall be spaced at 8'–0" maximum and shall be positioned on downstream side of fence.
6. Stakes to overlap and fence fabric to fold around each stake one full turn. Secure fabric to stake with 4 staples.
7. Stakes shall be driven tightly together to prevent potential flow-through at sediment at joint. The tops of the stakes shall be secured with wire.
8. For end stake, fence fabric shall be folded around two stakes one full turn and secured with 4 staples.
9. Minimum 4 staples per stake. Dimensions shown are typical.
10. Cross barriers shall be a minimum of 1/3 and a maximum of 1/2 the height of the linear barrier.
11. Maintenance openings shall be constructed in a manner to ensure sediment remains behind silt fence.
12. Joining sections shall not be placed at sump locations.
13. Sandbag rows and layers shall be offset to eliminate gaps.

ED_002781A_00003896-00857

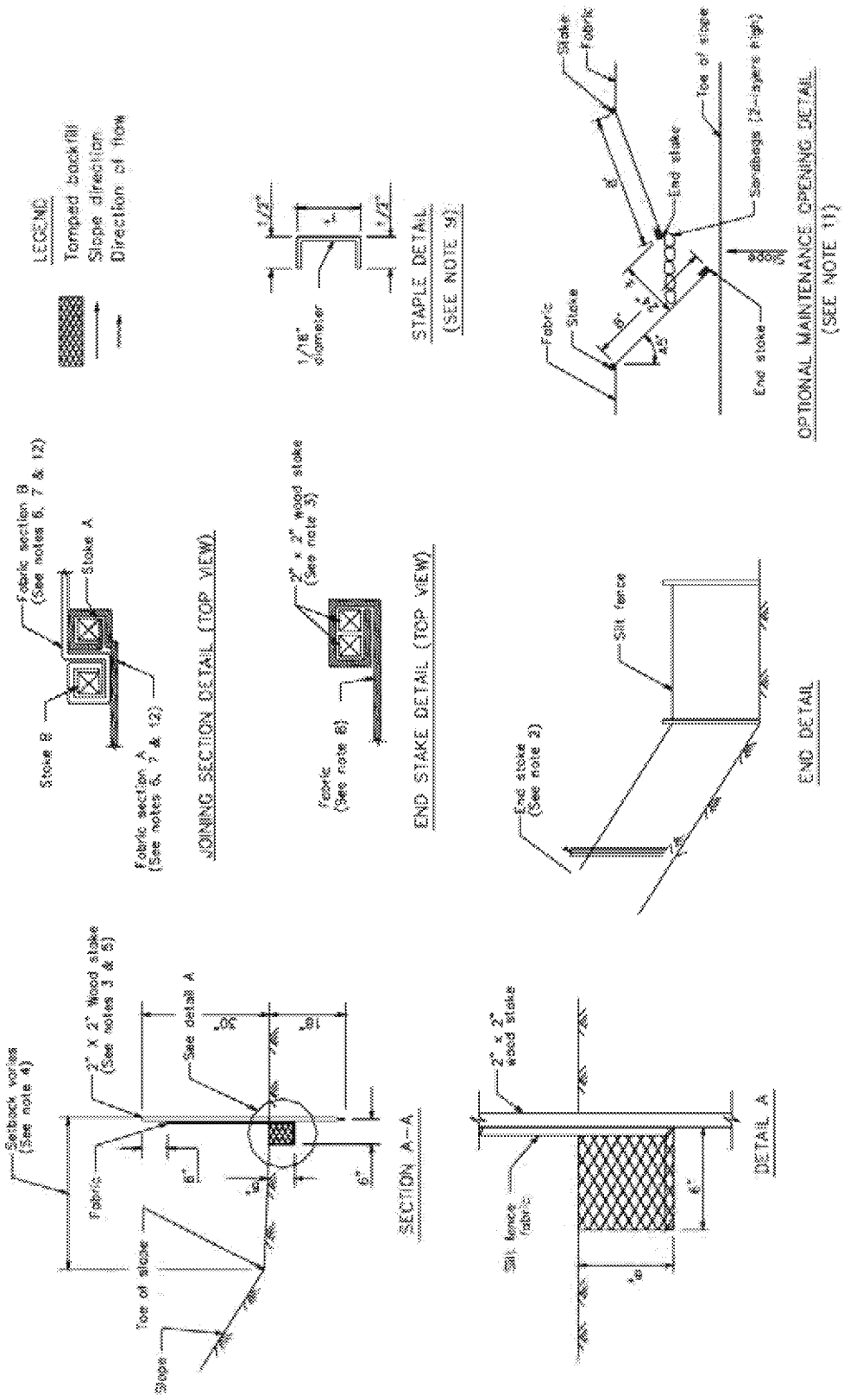

ED_002781A_00003896-00858

Fiber Rolls

SE-5

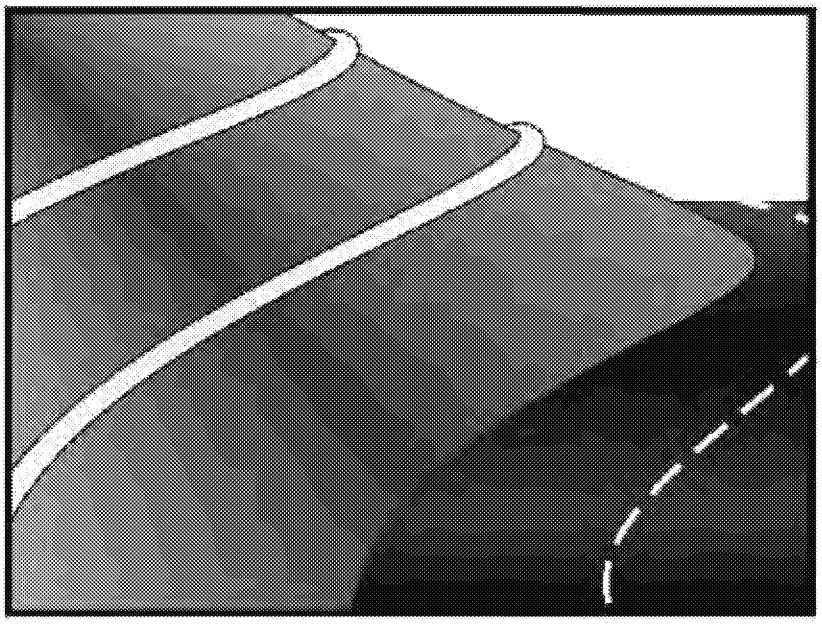

Objectives

EC	Erosion Control	☒
SE	Sediment Control	☑
TR	Tracking Control	
WE	Wind Erosion Control	
NS	Non-Stormwater Management Control	
WM	Waste Management and Materials Pollution Control	

Legend:

☑ **Primary Objective**

☒ **Secondary Objective**

Targeted Constituents

Sediment	☑
Nutrients	
Trash	
Metals	
Bacteria	
Oil and Grease	
Organics	

Potential Alternatives

SE-1 Silt Fence

SE-6 Gravel Bag Berm

SE-8 Sandbag Barrier

SE-9 Straw Bale Barrier

Description and Purpose

A fiber roll consists of straw, flax, or other similar materials bound into a tight tubular roll. When fiber rolls are placed at the toe and on the face of slopes, they intercept runoff, reduce its flow velocity, release the runoff as sheet flow, and provide removal of sediment from the runoff. By interrupting the length of a slope, fiber rolls can also reduce erosion.

Suitable Applications

Fiber rolls may be suitable:

- Along the toe, top, face, and at grade breaks of exposed and erodible slopes to shorten slope length and spread runoff as sheet flow
- At the end of a downward slope where it transitions to a steeper slope
- Along the perimeter of a project
- As check dams in unlined ditches
- Down-slope of exposed soil areas
- Around temporary stockpiles

Limitations

- Fiber rolls are not effective unless trenched

ED_002781A_00003896-00859

- Fiber rolls at the toe of slopes greater than 5:1 (H:V) should be a minimum of 20 in. diameter or installations achieving the same protection (i.e. stacked smaller diameter fiber rolls, etc.).
- Difficult to move once saturated.
- If not properly staked and trenched in, fiber rolls could be transported by high flows.
- Fiber rolls have a very limited sediment capture zone.
- Fiber rolls should not be used on slopes subject to creep, slumping, or landslide.

Implementation

Fiber Roll Materials

- Fiber rolls should be either prefabricated rolls or rolled tubes of erosion control blanket.

Assembly of Field Rolled Fiber Roll

- Roll length of erosion control blanket into a tube of minimum 8 in. diameter.
- Bind roll at each end and every 4 ft along length of roll with jute-type twine.

Installation

- Locate fiber rolls on level contours spaced as follows:
  - Slope inclination of 4:1 (H:V) or flatter: Fiber rolls should be placed at a maximum interval of 20 ft.
  - Slope inclination between 4:1 and 2:1 (H:V): Fiber Rolls should be placed at a maximum interval of 15 ft. (a closer spacing is more effective).
  - Slope inclination 2:1 (H:V) or greater: Fiber Rolls should be placed at a maximum interval of 10 ft. (a closer spacing is more effective).
- Turn the ends of the fiber roll up slope to prevent runoff from going around the roll.
- Stake fiber rolls into a 2 to 4 in. deep trench with a width equal to the diameter of the fiber roll.
  - Drive stakes at the end of each fiber roll and spaced 4 ft maximum on center.
  - Use wood stakes with a nominal classification of 0.75 by 0.75 in. and minimum length of 24 in.
- If more than one fiber roll is placed in a row, the rolls should be overlapped, not abutted.

Removal

- Fiber rolls are typically left in place.

ED_002781A_00003896-00860

- If fiber rolls are removed, collect and dispose of sediment accumulation, and fill and compact holes, trenches, depressions or any other ground disturbance to blend with adjacent ground.

Costs

Material costs for fiber rolls range from $20 - $30 per 25 ft roll.

Inspection and Maintenance

- Inspect BMPs prior to forecast rain, daily during extended rain events, after rain events, weekly during the rainy season, and at two-week intervals during the non-rainy season.
- Repair or replace split, torn, unraveling, or slumping fiber rolls.
- If the fiber roll is used as a sediment capture device, or as an erosion control device to maintain sheet flows, sediment that accumulates in the BMP must be periodically removed in order to maintain BMP effectiveness. Sediment should be removed when sediment accumulation reaches one-half the designated sediment storage depth, usually one-half the distance between the top of the fiber roll and the adjacent ground surface. Sediment removed during maintenance may be incorporated into earthwork on the site of disposed at an appropriate location.
- If fiber rolls are used for erosion control, such as in a mini check dam, sediment removal should not be required as long as the system continues to control the grade. Sediment control BMPs will likely be required in conjunction with this type of application.

References

Stormwater Quality Handbooks - Construction Site Best Management Practices (BMPs) Manual, State of California Department of Transportation (Caltrans), November 2000.

ED_002781A_00003896-00861

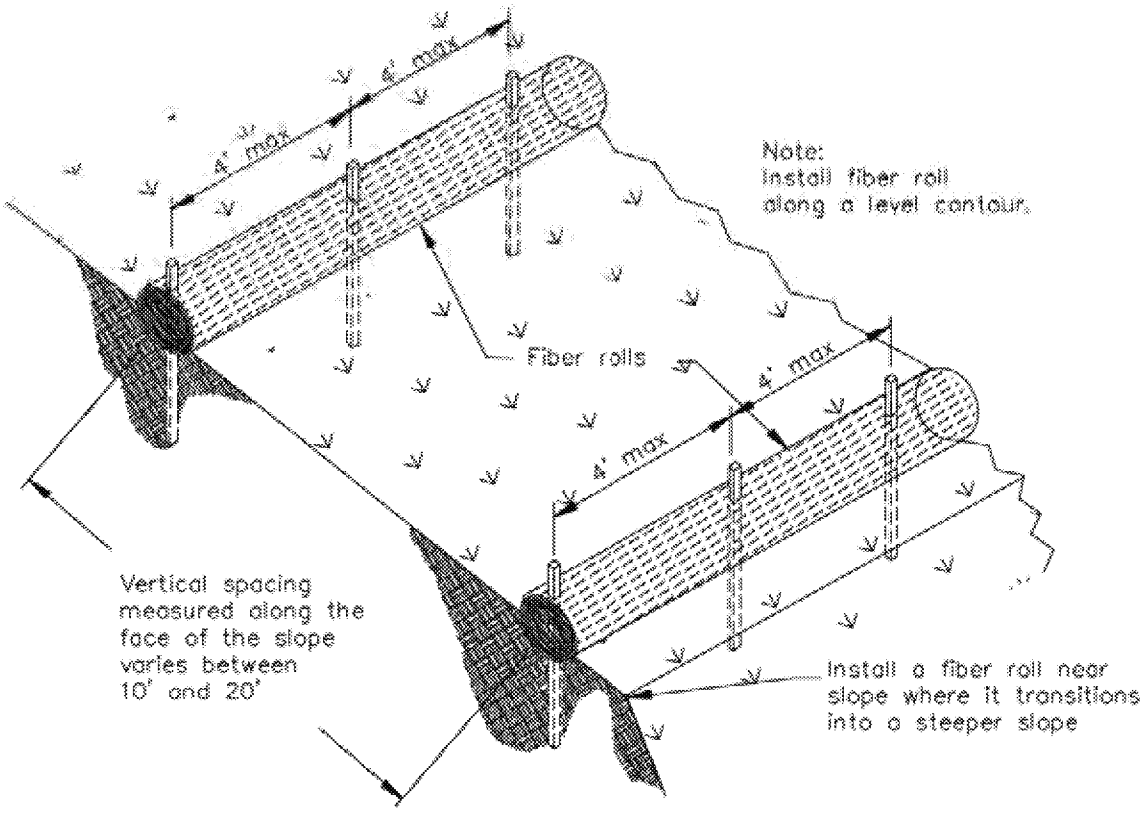

TYPICAL FIBER ROLL INSTALLATION
N.T.S.

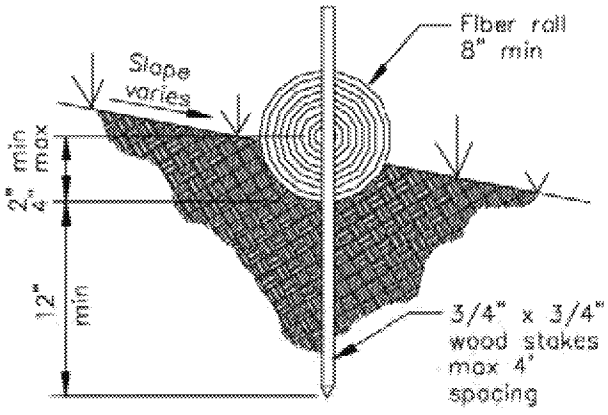

ENTRENCHMENT DETAIL
N.T.S.

ED_002781A_00003896-00862

Gravel Bag Berm SE-6

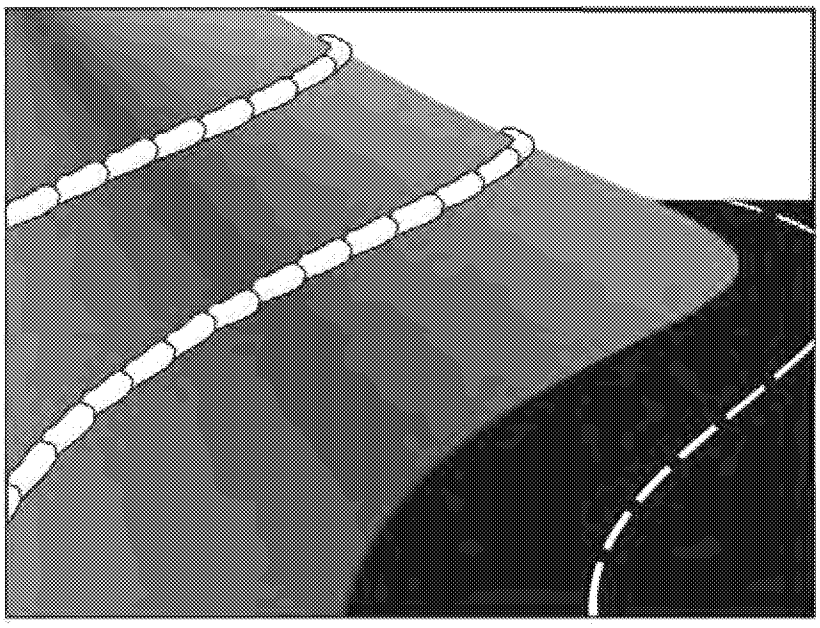

Objectives

EC	Erosion Control	☒
SE	Sediment Control	☑
TR	Tracking Control	
WE	Wind Erosion Control	
NS	Non-Stormwater Management Control	
WM	Waste Management and Materials Pollution Control	

Legend:

☑ **Primary Objective**

☒ **Secondary Objective**

Targeted Constituents

Sediment	☑
Nutrients	
Trash	
Metals	
Bacteria	
Oil and Grease	
Organics	

Potential Alternatives

SE-1 Silt Fence

SE-5 Fiber Roll

SE-8 Sandbag Barrier

SE-9 Straw Bale Barrier

Description and Purpose

A gravel bag berm is a series of gravel-filled bags placed on a level contour to intercept sheet flows. Gravel bags pond sheet flow runoff, allowing sediment to settle out, and release runoff slowly as sheet flows, preventing erosion.

Suitable Applications

Gravel bag berms may be suitable:

- As a linear sediment control measure:
  - Below the toe of slopes and erodible slopes
  - As sediment traps at culvert/pipe outlets
  - Below other small cleared areas
  - Along the perimeter of a site
  - Down slope of exposed soil areas
  - Around temporary stockpiles and spoil areas
  - Parallel to a roadway to keep sediment off paved areas
  - Along streams and channels
- As linear erosion control measure:

ED_002781A_00003896-00863

- Along the face and at grade breaks of exposed and erodible slopes to shorten slope length and spread runoff as sheet flow
- At the top of slopes to divert runoff away from disturbed slopes
- As check dams across mildly sloped construction roads

Limitations

- Gravel berms may be difficult to remove.
- Removal problems limit their usefulness in landscaped areas.
- Gravel bag berm may not be appropriate for drainage areas greater than 5 acres.
- Runoff will pond upstream of the filter, possibly causing flooding if sufficient space does not exist.
- Degraded gravel bags may rupture when removed, spilling contents.
- Installation can be labor intensive.
- Berms may have limited durability for long-term projects.
- When used to detain concentrated flows, maintenance requirements increase.

Implementation

General

A gravel bag berm consists of a row of open graded gravel–filled bags placed on a level contour. When appropriately placed, a gravel bag berm intercepts and slows sheet flow runoff, causing temporary ponding. The temporary ponding provides quiescent conditions allowing sediment to settle. The open graded gravel in the bags is porous, which allows the ponded runoff to flow slowly through the bags, releasing the runoff as sheet flows. Gravel bag berms also interrupt the slope length and thereby reduce erosion by reducing the tendency of sheet flows to concentrate into rivulets, which erode rills, and ultimately gullies, into disturbed, sloped soils. Gravel bag berms are similar to sand bag barriers, but are more porous.

Design and Layout

- Locate gravel bag berms on level contours.
  - Slopes between 20:1 and 2:1 (H:V): Gravel bags should be placed at a maximum interval of 50 ft (a closer spacing is more effective), with the first row near the slope toe.
  - Slopes 2:1 (H:V) or steeper: Gravel bags should be placed at a maximum interval of 25 ft (a closer spacing is more effective), with the first row placed the slope toe.
- Turn the ends of the gravel bag barriers up slope to prevent runoff from going around the berm.
- Allow sufficient space up slope from the gravel bag berm to allow ponding, and to provide room for sediment storage.

ED_002781A_00003896-00864

- For installation near the toe of the slope, consider moving the gravel bag barriers away from the slope toe to facilitate cleaning. To prevent flows behind the barrier, bags can be placed perpendicular to a berm to serve as cross barriers.
- Drainage area should not exceed 5 acres.
- In Non-Traffic Areas:
  - Height = 18 in. maximum
  - Top width = 24 in. minimum for three or more layer construction
  - Top width = 12 in. minimum for one or two layer construction
  - Side slopes = 2:1 or flatter
- In Construction Traffic Areas:
  - Height = 12 in. maximum
  - Top width = 24 in. minimum for three or more layer construction.
  - Top width = 12 in. minimum for one or two layer construction.
  - Side slopes = 2:1 or flatter.
- Butt ends of bags tightly
- On multiple row, or multiple layer construction, overlapp butt joints of adjacent row and row beneath.
- Use a pyramid approach when stacking bags.

Materials

- ***Bag Material:*** Bags should be woven polypropylene, polyethylene or polyamide fabric or burlap, minimum unit weight of 4 ounces/yd^2, Mullen burst strength exceeding 300 lb/in^2 in conformance with the requirements in ASTM designation D3786, and ultraviolet stability exceeding 70% in conformance with the requirements in ASTM designation D4355.
- ***Bag Size:*** Each gravel-filled bag should have a length of 18 in., width of 12 in., thickness of 3 in., and mass of approximately 33 lbs. Bag dimensions are nominal, and may vary based on locally available materials.
- ***Fill Material:*** Fill material should be 0.5 to 1 in. Class 2 aggregate base, clean and free from clay, organic matter, and other deleterious material, or other suitable open graded, non-cohesive, porous gravel.

Costs

Gravel filter: Expensive, since off-site materials, hand construction, and demolition/removal are usually required. Material costs for gravel bags are average of $2.50 per empty gravel bag. Gravel costs range from $20-$35 per yd^3.

ED_002781A_00003896-00865

Inspection and Maintenance

- Inspect BMPs prior to forecast rain, daily during extended rain events, after rain events, weekly during the rainy season, and at two-week intervals during the non-rainy season.
- Gravel bags exposed to sunlight will need to be replaced every two to three months due to degrading of the bags.
- Reshape or replace gravel bags as needed.
- Repair washouts or other damage as needed.
- Sediment that accumulates in the BMP must be periodically removed in order to maintain BMP effectiveness. Sediment should be removed when the sediment accumulation reaches one-third of the barrier height. Sediment removed during maintenance may be incorporated into earthwork on the site or disposed at an appropriate location.
- Remove gravel bag berms when no longer needed. Remove sediment accumulation and clean, re-grade, and stabilize the area. Removed sediment should be incorporated in the project or disposed of.

References

Handbook of Steel Drainage and Highway Construction, American Iron and Steel Institute, 1983.

Stormwater Quality Handbooks - Construction Site Best Management Practices (BMPs) Manual, State of California Department of Transportation (Caltrans), November 2000.

Stormwater Pollution Plan Handbook, First Edition, State of California, Department of Transportation Division of New Technology, Materials and Research, October 1992.

ED_002781A_00003896-00866

Street Sweeping and Vacuuming SE-7

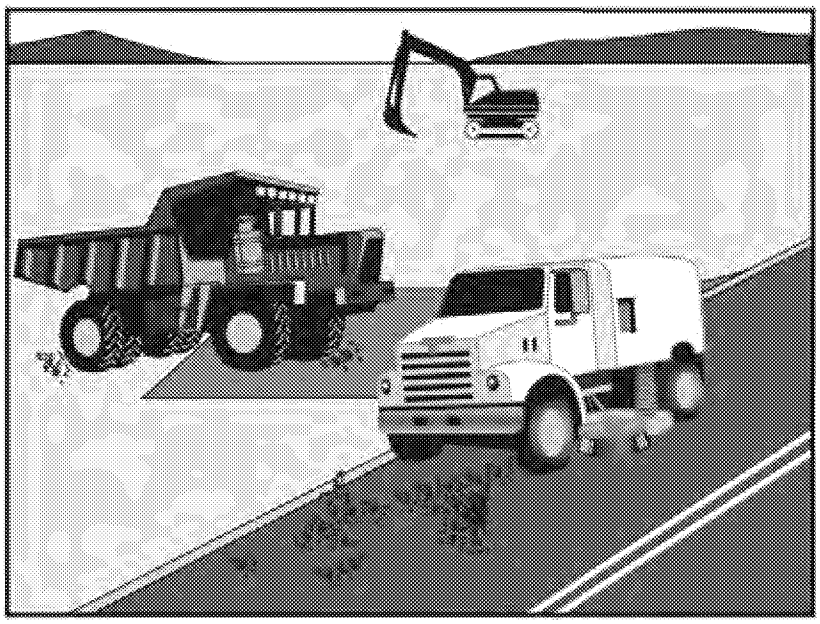

Objectives

EC	Erosion Control	
SE	Sediment Control	☒
TR	Tracking Control	☑
WE	Wind Erosion Control	
NS	Non-Stormwater Management Control	
WM	Waste Management and Materials Pollution Control	

Legend:

☑ **Primary Objective**

☒ **Secondary Objective**

Targeted Constituents

Sediment	☑
Nutrients	
Trash	☑
Metals	
Bacteria	
Oil and Grease	☑
Organics	

Potential Alternatives

None

Description and Purpose

Street sweeping and vacuuming includes use of self-propelled and walk-behind equipment to remove sediment from streets and roadways, and to clean paved surfaces in preparation for final paving. Sweeping and vacuuming prevents sediment from the project site from entering storm drains or receiving waters.

Suitable Applications

Sweeping and vacuuming are suitable anywhere sediment is tracked from the project site onto public or private paved streets and roads, typically at points of egress. Sweeping and vacuuming are also applicable during preparation of paved surfaces for final paving.

Limitations

Sweeping and vacuuming may not be effective when sediment is wet or when tracked soil is caked (caked soil may need to be scraped loose).

Implementation

- Controlling the number of points where vehicles can leave the site will allow sweeping and vacuuming efforts to be focused, and perhaps save money.
- Inspect potential sediment tracking locations daily.
- Visible sediment tracking should be swept or vacuumed on a daily basis.

ED_002781A_00003896-00867

- Do not use kick brooms or sweeper attachments. These tend to spread the dirt rather than remove it.
- If not mixed with debris or trash, consider incorporating the removed sediment back into the project.

Costs

Rental rates for self-propelled sweepers vary depending on hopper size and duration of rental. Expect rental rates from $58/hour (3 yd^3 hopper) to $88/hour (9 yd^3 hopper), plus operator costs. Hourly production rates vary with the amount of area to be swept and amount of sediment. Match the hopper size to the area and expect sediment load to minimize time spent dumping.

Inspection and Maintenance

- Inspect BMPs prior to forecast rain, daily during extended rain events, after rain events, weekly during the rainy season, and at two-week intervals during the non-rainy season.
- When actively in use, points of ingress and egress must be inspected daily.
- When tracked or spilled sediment is observed outside the construction limits, it must be removed at least daily. More frequent removal, even continuous removal, may be required in some jurisdictions.
- Be careful not to sweep up any unknown substance or any object that may be potentially hazardous.
- Adjust brooms frequently; maximize efficiency of sweeping operations.
- After sweeping is finished, properly dispose of sweeper wastes at an approved dumpsite.

References

Stormwater Quality Handbooks - Construction Site Best Management Practices (BMPs) Manual, State of California Department of Transportation (Caltrans), November 2000.

Labor Surcharge and Equipment Rental Rates, State of California Department of Transportation (Caltrans), April 1, 2002 – March 31, 2003.

ED_002781A_00003896-00868

Sandbag Barrier SE-8

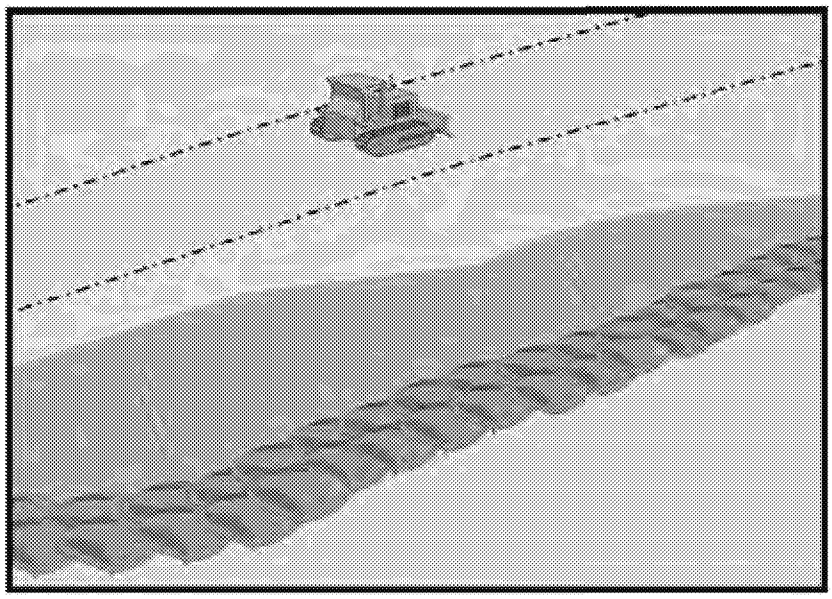

Objectives

EC	Erosion Control	☒
SE	Sediment Control	☑
TR	Tracking Control	
WE	Wind Erosion Control	
NS	Non-Stormwater Management Control	
WM	Waste Management and Materials Pollution Control	

Legend:

☑ **Primary Objective**

☒ **Secondary Objective**

Description and Purpose

A sandbag barrier is a series of sand-filled bags placed on a level contour to intercept sheet flows. Sandbag barriers pond sheet flow runoff, allowing sediment to settle out.

Suitable Applications

Sandbag barriers may be suitable:

- As a linear sediment control measure:
  - Below the toe of slopes and erodible slopes
  - As sediment traps at culvert/pipe outlets
  - Below other small cleared areas
  - Along the perimeter of a site
  - Down slope of exposed soil areas
  - Around temporary stockpiles and spoil areas
  - Parallel to a roadway to keep sediment off paved areas
  - Along streams and channels
- As linear erosion control measure:
  - Along the face and at grade breaks of exposed and erodible slopes to shorten slope length and spread runoff as sheet flow

Targeted Constituents

Sediment	☑
Nutrients	
Trash	
Metals	
Bacteria	
Oil and Grease	
Organics	

Potential Alternatives

SE-1 Silt Fence

SE-5 Fiber Rolls

SE-6 Gravel Bag Berm

SE-9 Straw Bale Barrier

ED_002781A_00003896-00869

- At the top of slopes to divert runoff away from disturbed slopes
- As check dams across mildly sloped construction roads

Limitations

- It is necessary to limit the drainage area upstream of the barrier to 5 acres.
- Degraded sandbags may rupture when removed, spilling sand.
- Installation can be labor intensive.
- Barriers may have limited durability for long-term projects.
- When used to detain concentrated flows, maintenance requirements increase.
- Burlap should not be used for sandbags.

Implementation

General

A sandbag barrier consists of a row of sand-filled bags placed on a level contour. When appropriately placed, a sandbag barrier intercepts and slows sheet flow runoff, causing temporary ponding. The temporary ponding provides quiescent conditions allowing sediment to settle. While the sand-filled bags are porous, the fine sand tends to quickly plug with sediment, limiting the rate of flow through the barrier. If a porous barrier is desired, consider SE-1, Silt Fence, SE-5, Fiber Rolls, SE-6, Gravel Bag Berms, or SE-9, Straw Bale Barriers. Sandbag barriers also interrupt the slope length and thereby reduce erosion by reducing the tendency of sheet flows to concentrate into rivulets which erode rills, and ultimately gullies, into disturbed, sloped soils. Sandbag barriers are similar to ground bag berms, but less porous.

Design and Layout

- Locate sandbag barriers on a level contour.
  - Slopes between 20:1 and 2:1 (H:V): Sandbags should be placed at a maximum interval of 50 ft (a closer spacing is more effective), with the first row near the slope toe.
  - Slopes 2:1 (H:V) or steeper: Sandbags should be placed at a maximum interval of 25 ft (a closer spacing is more effective), with the first row placed near the slope toe.
- Turn the ends of the sandbag barrier up slope to prevent runoff from going around the barrier.
- Allow sufficient space up slope from the barrier to allow ponding, and to provide room for sediment storage.
- For installation near the toe of the slope, consider moving the barrier away from the slope toe to facilitate cleaning. To prevent flow behind the barrier, sandbags can be placed perpendicular to the barrier to serve as cross barriers.
- Drainage area should not exceed 5 acres.

ED_002781A_00003896-00870

- Stack sandbags at least three bags high.
- Butt ends of bags tightly.
- Overlapp butt joints of row beneath with each successive row.
- Use a pyramid approach when stacking bags.
- In non-traffic areas
  - Height = 18 in. maximum
  - Top width = 24 in. minimum for three or more layer construction
  - Side slope = 2:1 or flatter
- In construction traffic areas
  - Height = 12 in. maximum
  - Top width = 24 in. minimum for three or more layer construction.
  - Side slopes = 2:1 or flatter.

Materials

- ***Sandbag Material:*** Sandbag should be woven polypropylene, polyethylene or polyamide fabric, minimum unit weight of 4 ounces/yd^2, Mullen burst strength exceeding 300 lb/in^2 in conformance with the requirements in ASTM designation D3786, and ultraviolet stability exceeding 70% in conformance with the requirements in ASTM designation D4355. Use of burlap may not acceptable in some jurisdictions.
- ***Sandbag Size:*** Each sand-filled bag should have a length of 18 in., width of 12 in., thickness of 3 in., and mass of approximately 33 lbs. Bag dimensions are nominal, and may vary based on locally available materials.
- ***Fill Material:*** All sandbag fill material should be non-cohesive, Class 1 or Class 2 permeable material free from clay and deleterious material.

Costs

Sandbag barriers are more costly, but typically have a longer useful life than other barriers. Empty sandbags cost $0.25 - $0.75. Average cost of fill material is $8 per yd^3. Pre-filled sandbags are more expensive at $1.50 - $2.00 per bag.

Inspection and Maintenance

- Inspect BMPs prior to forecast rain, daily during extended rain events, after rain events, weekly during the rainy season, and at two-week intervals during the non-rainy season.
- Sandbags exposed to sunlight will need to be replaced every two to three months due to degradation of the bags.
- Reshape or replace sandbags as needed.

ED_002781A_00003896-00871

- Repair washouts or other damage as needed.
- Sediment that accumulates in the BMP must be periodically removed in order to maintain BMP effectiveness. Sediment should be removed when the sediment accumulation reaches one-third of the barrier height. Sediment removed during maintenance may be incorporated into earthwork on the site or disposed at an appropriate location.
- Remove sandbags when no longer needed. Remove sediment accumulation, and clean, re-grade, and stabilize the area.

References

Stormwater Quality Handbooks - Construction Site Best Management Practices (BMPs) Manual, State of California Department of Transportation (Caltrans), November 2000.

ED_002781A_00003896-00872

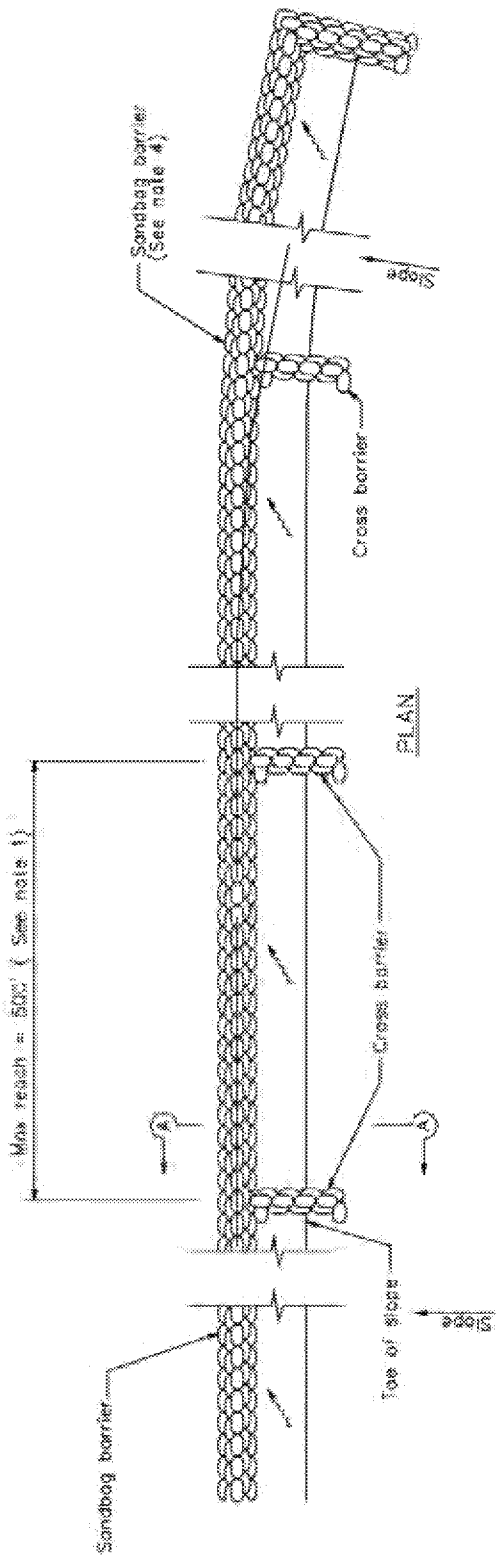

NOTES

1. Construct the length of each reach so that the change in base elevation along the reach does not exceed 1/2 the height of the linear barrier. In no case shall the reach length exceed 500'.
2. Place sandbags tightly.
3. Dimension may vary to fit field condition.
4. Sandbag barrier shall be a minimum of 3 bags high.
5. The end of the barrier shall be turned up slope.
6. Cross barriers shall be a min of 1/2 and a max of 2/3 the height of the linear barrier.
7. Sandbag rows and layers shall be staggered to eliminate gaps.

ED_002781A_00003896-00873

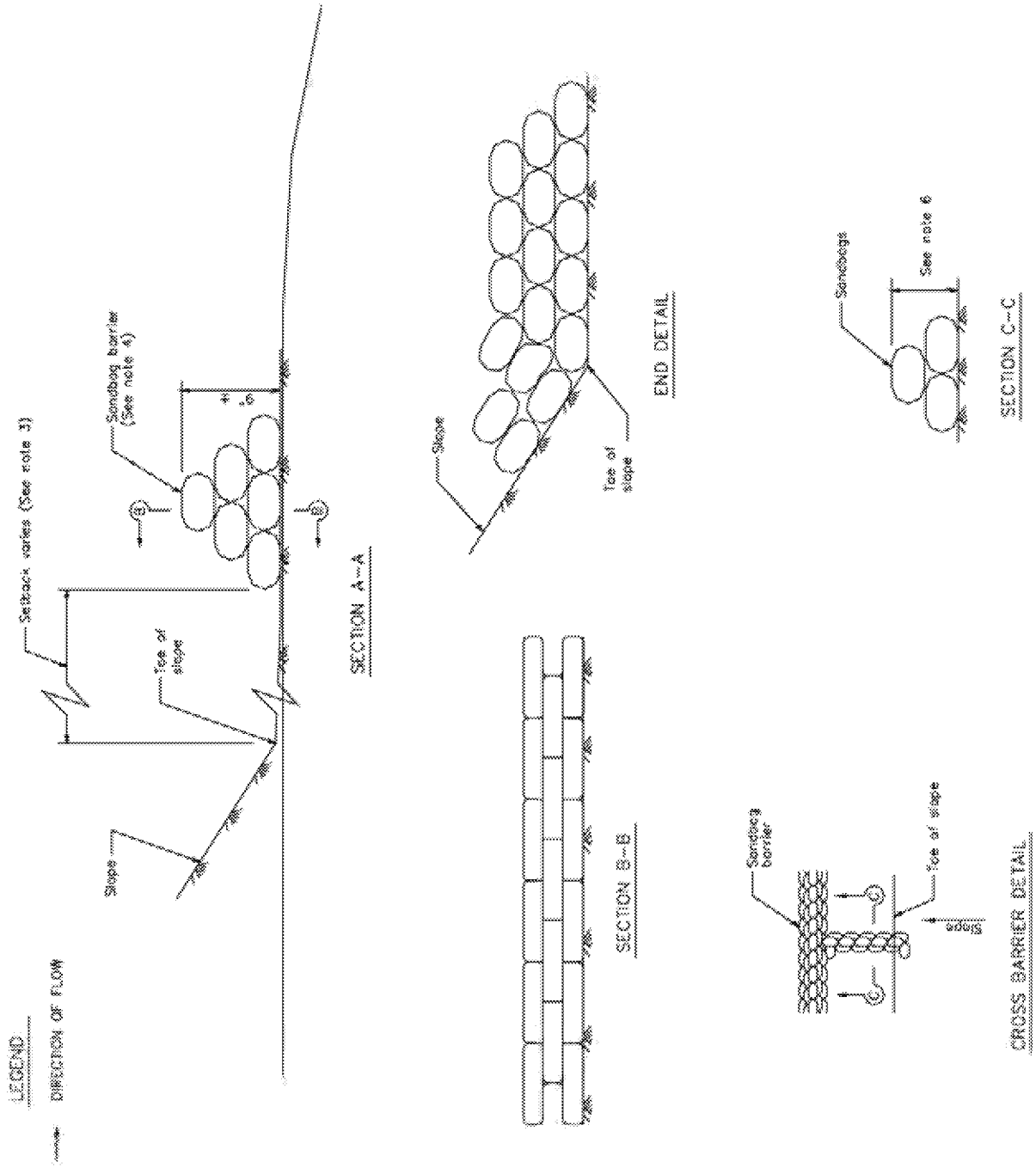

ED_002781A_00003896-00874

Storm Drain Inlet Protection SE-10

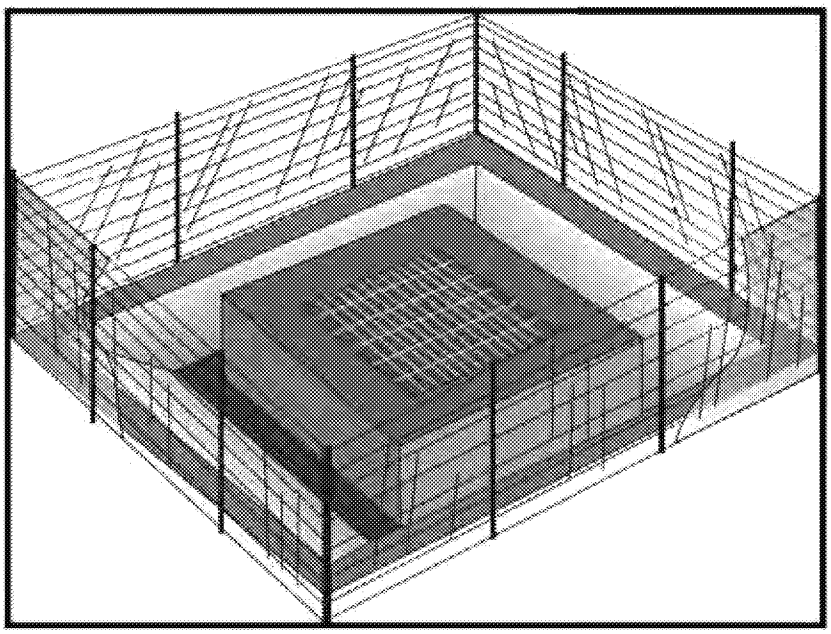

Objectives

EC	Erosion Control	
SE	Sediment Control	☑
TR	Tracking Control	
WE	Wind Erosion Control	
NS	Non-Stormwater Management Control	
WM	Waste Management and Materials Pollution Control	

Legend:

☑ **Primary Objective**

☒ **Secondary Objective**

Targeted Constituents

Sediment	☑
Nutrients	
Trash	☑
Metals	
Bacteria	
Oil and Grease	
Organics	

Potential Alternatives

SE-1 Silt Fence

SE-5 Fiber Rolls

SE-6 Gravel Bag Berm

SE-8 Sandbag Barrier

SE-9 Straw Bale Barrier

Description and Purpose

Storm drain inlet protection consists of a sediment filter or an impounding area around or upstream of a storm drain, drop inlet, or curb inlet. Storm drain inlet protection measures temporarily pond runoff before it enters the storm drain, allowing sediment to settle. Some filter configurations also remove sediment by filtering, but usually the ponding action results in the greatest sediment reduction.

Suitable Applications

Every storm drain inlet receiving sediment-laden runoff should be protected.

Limitations

- Drainage area should not exceed 1 acre.
- Straw bales, while potentially effective, have not produced in practice satisfactory results, primarily due to improper installation.
- Requires an adequate area for water to pond without encroaching into portions of the roadway subject to traffic.
- Inlet protection usually requires other methods of temporary protection to prevent sediment-laden stormwater and non-stormwater discharges from entering the storm drain system.
- Sediment removal may be difficult in high flow conditions or if runoff is heavily sediment laden. If high flow conditions are

ED_002781A_00003896-00875

expected, use other onsite sediment trapping techniques in conjunction with inlet protection.

- Frequent maintenance is required.
- For drainage areas larger than 1 acre, runoff should be routed to a sediment-trapping device designed for larger flows. See BMPs SE-2, Sediment Basin, and SE-3, Sediment Traps.
- Excavated drop inlet sediment traps are appropriate where relatively heavy flows are expected, and overflow capability is needed.

Implementation

General

Large amounts of sediment may enter the storm drain system when storm drains are installed before the upslope drainage area is stabilized, or where construction is adjacent to an existing storm drain. In cases of extreme sediment loading, the storm drain itself may clog and lose a major portion of its capacity. To avoid these problems, it is necessary to prevent sediment from entering the system at the inlets.

Inlet control measures presented in this handbook should not be used for inlets draining more than one acre. Runoff from larger disturbed areas should be first routed through SE-2, Sediment Basin or SE-3, Sediment Trap. Different types of inlet protection are appropriate for different applications depending on site conditions and the type of inlet. Inlet protection methods not presented in this handbook should be approved by the local stormwater management agency.

Design and Layout

Identify existing and planned storm drain inlets that have the potential to receive sediment-laden surface runoff. Determine if storm drain inlet protection is needed and which method to use.

- Limit upstream drainage area to 1 acre maximum. For larger drainage areas, use SE-2, Sediment Basin, or SE-3, Sediment Trap, upstream of the inlet protection device.
- The key to successful and safe use of storm drain inlet protection devices is to know where runoff will pond or be diverted.
  - Determine the acceptable location and extent of ponding in the vicinity of the drain inlet. The acceptable location and extent of ponding will influence the type and design of the storm drain inlet protection device.
  - Determine the extent of potential runoff diversion caused by the storm drain inlet protection device. Runoff ponded by inlet protection devices may flow around the device and towards the next downstream inlet. In some cases, this is acceptable; in other cases, serious erosion or downstream property damage can be caused by these diversions. The possibility of runoff diversions will influence whether or not storm drain inlet protection is suitable; and, if suitable, the type and design of the device.
- The location and extent of ponding, and the extent of diversion, can usually be controlled through appropriate placement of the inlet protection device. In some cases, moving the

ED_002781A_00003896-00876

inlet protection device a short distance upstream of the actual inlet can provide more efficient sediment control, limit ponding to desired areas, and prevent or control diversions.

- Four types of inlet protection are presented below. However, it is recognized that other effective methods and proprietary devices exist and may be selected.
  - Filter Fabric Fence: Appropriate for drainage basins with less than a 5% slope, sheet flows, and flows under 0.5 cfs.
  - Excavated Drop Inlet Sediment Trap: An excavated area around the inlet to trap sediment (SE-3).
  - Gravel bag barrier: Used to create a small sediment trap upstream of inlets on sloped, paved streets. Appropriate for sheet flow or when concentrated flow may exceed 0.5 cfs, and where overtopping is required to prevent flooding.
  - Block and Gravel Filter: Appropriate for flows greater than 0.5 cfs.
- Select the appropriate type of inlet protection and design as referred to or as described in this fact sheet.
- Provide area around the inlet for water to pond without flooding structures and property.
- Grates and spaces around all inlets should be sealed to prevent seepage of sediment-laden water.
- Excavate sediment sumps (where needed) 1 to 2 ft with 2:1 side slopes around the inlet.

Installation

- ***DI Protection Type 1 - Filter Fabric Fence*** - The filter fabric fence (Type 1) protection is shown in the attached figure. Similar to constructing a silt fence; see BMP SE-1, Silt Fence. Do not place filter fabric underneath the inlet grate since the collected sediment may fall into the drain inlet when the fabric is removed or replaced.

  1. Excavate a trench approximately 6 in. wide and 6 in. deep along the line of the silt fence inlet protection device.
  2. Place 2 in. by 2 in. wooden stakes around the perimeter of the inlet a maximum of 3 ft apart and drive them at least 18 in. into the ground or 12 in. below the bottom of the trench. The stakes must be at least 48 in.
  3. Lay fabric along bottom of trench, up side of trench, and then up stakes. See SE-1, Silt Fence, for details. The maximum silt fence height around the inlet is 24 in.
  4. Staple the filter fabric (for materials and specifications, see SE-1, Silt Fence) to wooden stakes. Use heavy-duty wire staples at least 1 in. in length.
  5. Backfill the trench with gravel or compacted earth all the way around.

- ***DI Protection Type 2 - Excavated Drop Inlet Sediment Trap*** - The excavated drop inlet sediment trap (Type 2) is shown in the attached figures. Install filter fabric fence in

ED_002781A_00003896-00877

accordance with DI Protection Type 1. Size excavated trap to provide a minimum storage capacity calculated at the rate 67 yd^3/acre of drainage area.

- ***DI Protection Type 3 - Gravel bag*** - The gravel bag barrier (Type 3) is shown in the figures. Flow from a severe storm should not overtop the curb. In areas of high clay and silts, use filter fabric and gravel as additional filter media. Construct gravel bags in accordance with SE-6, Gravel Bag Berm. Gravel bags should be used due to their high permeability.

  1. Use sand bag made of geotextile fabric (not burlap) and fill with 0.75 in. rock or 0.25 in. pea gravel.
  2. Construct on gently sloping street.
  3. Leave room upstream of barrier for water to pond and sediment to settle.
  4. Place several layers of sand bags – overlapping the bags and packing them tightly together.
  5. Leave gap of one bag on the top row to serve as a spillway. Flow from a severe storm (e.g., 10 year storm) should not overtop the curb.

- ***DI Protection Type 4 – Block and Gravel Filter*** - The block and gravel filter (Type 4) is shown in the figures. Block and gravel filters are suitable for curb inlets commonly used in residential, commercial, and industrial construction.

  1. Place hardware cloth or comparable wire mesh with 0.5 in. openings over the drop inlet so that the wire extends a minimum of 1 ft beyond each side of the inlet structure. If more than one strip is necessary, overlap the strips. Place filter fabric over the wire mesh.
  2. Place concrete blocks lengthwise on their sides in a single row around the perimeter of the inlet, so that the open ends face outward, not upward. The ends of adjacent blocks should abut. The height of the barrier can be varied, depending on design needs, by stacking combinations of blocks that are 4 in., 8 in., and 12 in. wide. The row of blocks should be at least 12 in. but no greater than 24 in. high.
  3. Place wire mesh over the outside vertical face (open end) of the concrete blocks to prevent stone from being washed through the blocks. Use hardware cloth or comparable wire mesh with 0.5 in. opening.
  4. Pile washed stone against the wire mesh to the top of the blocks. Use 0.75 to 3 in.

Costs

- Average annual cost for installation and maintenance (one year useful life) is $200 per inlet.

Inspection and Maintenance

- Inspect BMPs prior to forecast rain, daily during extended rain events, after rain events, weekly during the rainy season, and at two-week intervals during the non-rainy season.

ED_002781A_00003896-00878

- Filter Fabric Fences. If the fabric becomes clogged, torn, or degrades, it should be replaced. Make sure the stakes are securely driven in the ground and are in good shape (i.e., not bent, cracked, or splintered, and are reasonably perpendicular to the ground). Replace damaged stakes.

- Gravel Filters. If the gravel becomes clogged with sediment, it must be carefully removed from the inlet and either cleaned or replaced. Since cleaning gravel at a construction site may be difficult, consider using the sediment-laden stone as fill material and put fresh stone around the inlet. Inspect bags for holes, gashes, and snags, and replace bags as needed. Check gravel bags for proper arrangement and displacement.

- Sediment that accumulates in the BMP must be periodically removed in order to maintain BMP effectiveness. Sediment should be removed when the sediment accumulation reaches one-third of the barrier height. Sediment removed during maintenance may be incorporated into earthwork on the site ore disposed at an appropriate location.

- Remove storm drain inlet protection once the drainage area is stabilized.

  - Clean and regrade area around the inlet and clean the inside of the storm drain inlet as it must be free of sediment and debris at the time of final inspection.

References

Stormwater Quality Handbooks - Construction Site Best Management Practices (BMPs) Manual, State of California Department of Transportation (Caltrans), November 2000.

Stormwater Management Manual for The Puget Sound Basin, Washington State Department of Ecology, Public Review Draft, 1991.

ED_002781A_00003896-00879

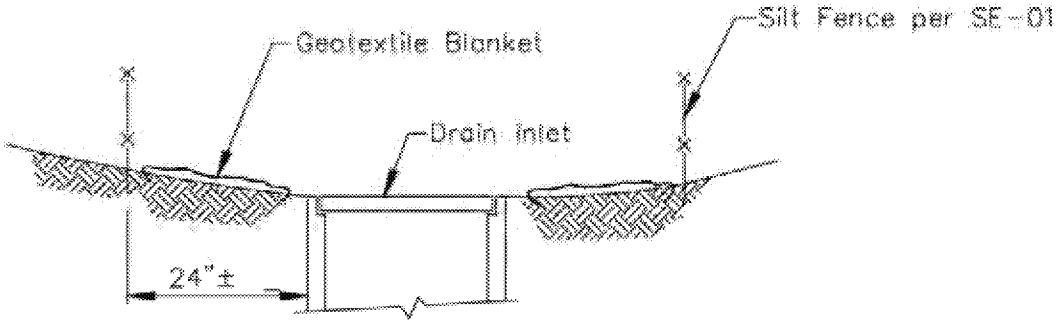

SECTION A–A

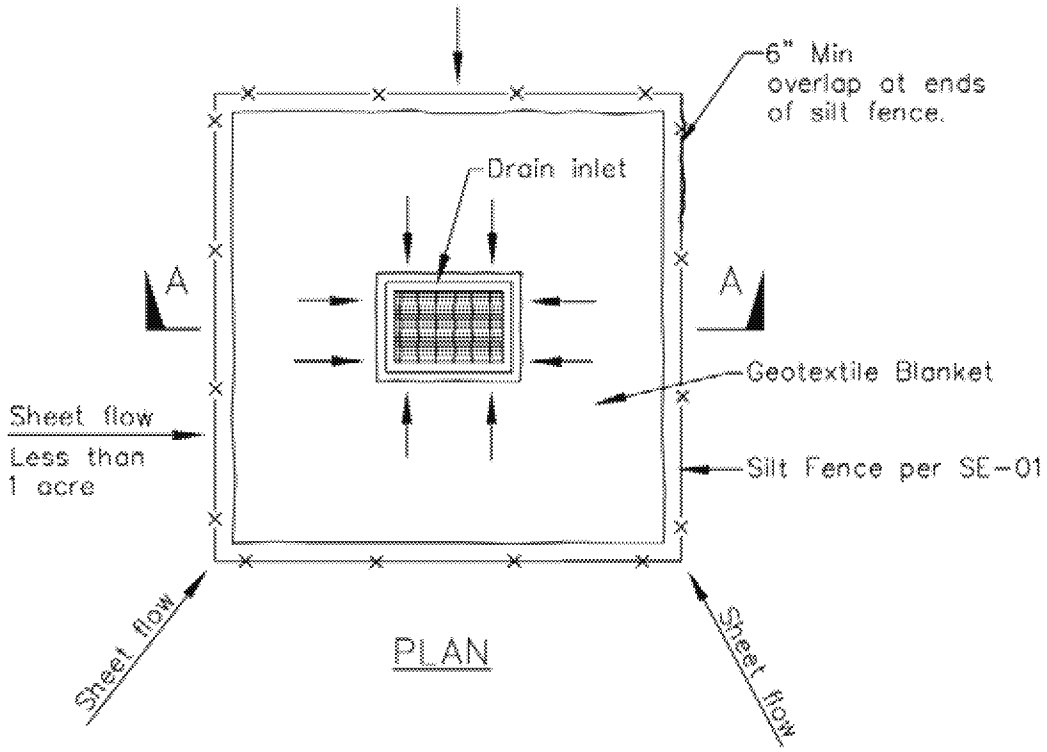

PLAN

DI PROTECTION TYPE 1
NOT TO SCALE

NOTES:

1. For use in areas where grading has been completed and final soil stabilization and seeding are pending.
2. Not applicable in paved areas.
3. Not applicable with concentrated flows.

ED_002781A_00003896-00880

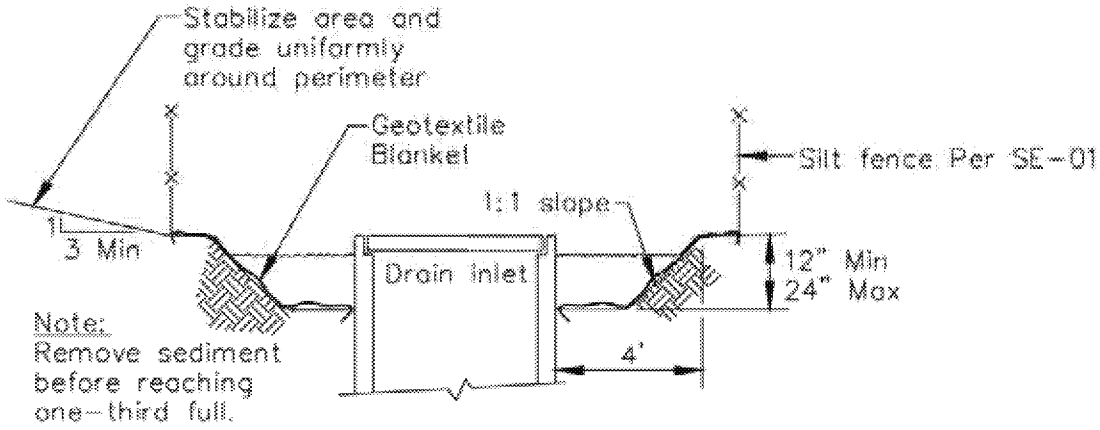

Section A–A

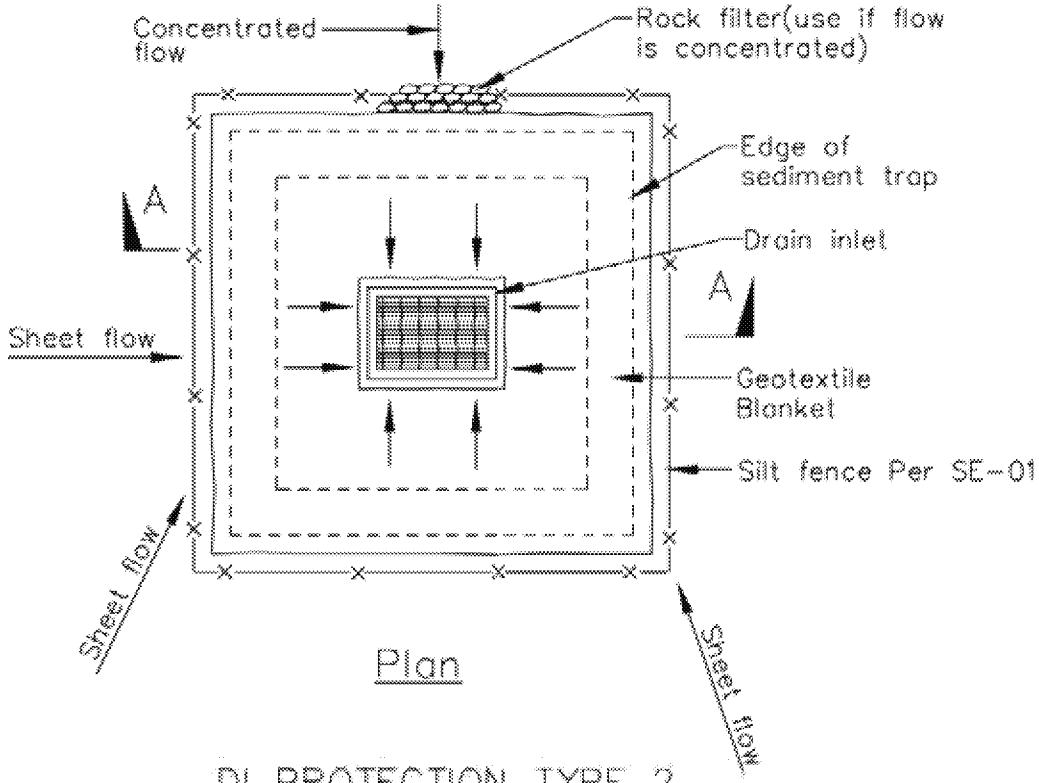

Plan

DI PROTECTION TYPE 2
NOT TO SCALE

Notes
1. For use in cleared and grubbed and in graded areas.
2. Shape basin so that longest inflow area faces longest length of trap.
3. For concentrated flows, shape basin in 2:1 ratio with length oriented towards direction of flow.

ED_002781A_00003896-00881

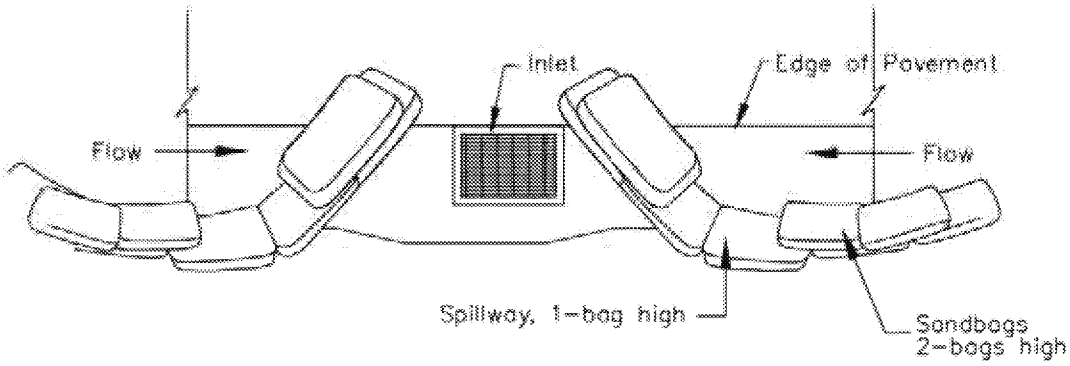

TYPICAL PROTECTION FOR INLET ON SUMP

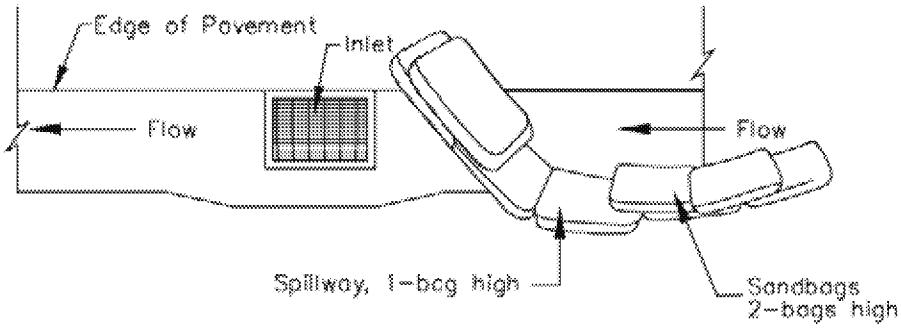

TYPICAL PROTECTION FOR INLET ON GRADE

NOTES:

1. Intended for short-term use.
2. Use to inhibit non-storm water flow.
3. Allow for proper maintenance and cleanup.
4. Bags must be removed after adjacent operation is completed
5. Not applicable in areas with high silts and clays without filter fabric.

DI PROTECTION TYPE 3
NOT TO SCALE

ED_002781A_00003896-00882

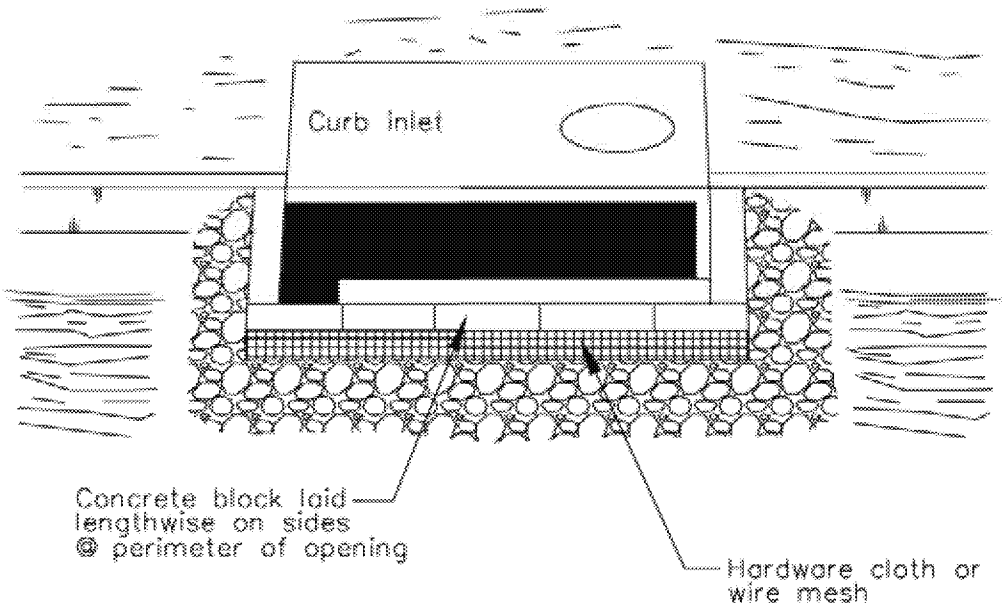

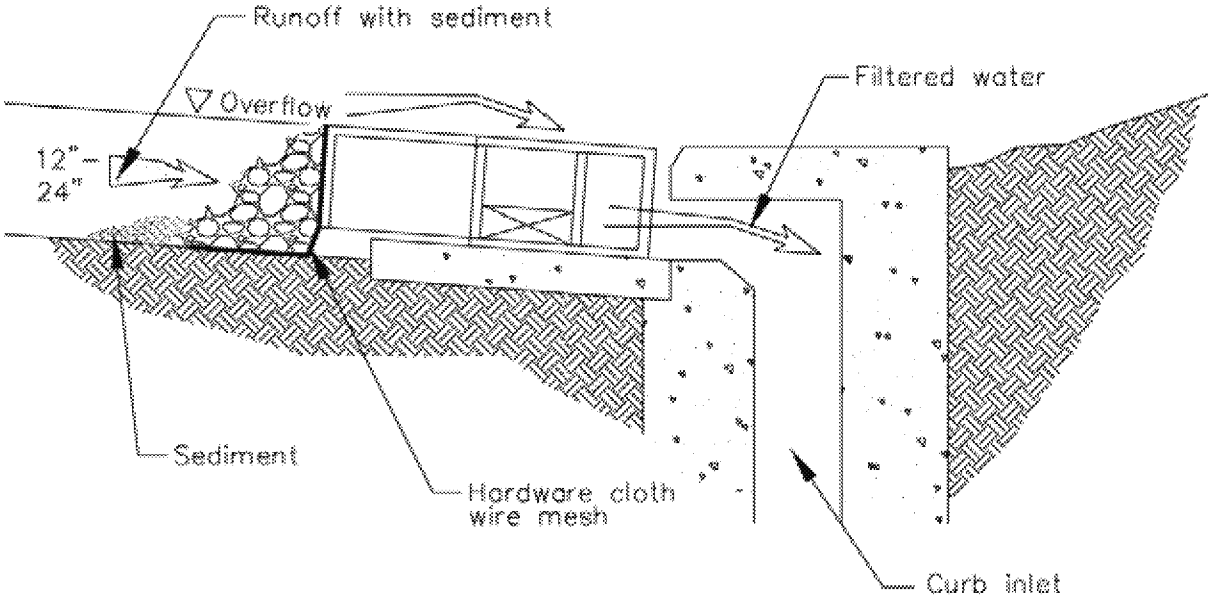

DI PROTECTION – TYPE 4
NOT TO SCALE

ED_002781A_00003896-00883

Wind Erosion Control WE-1

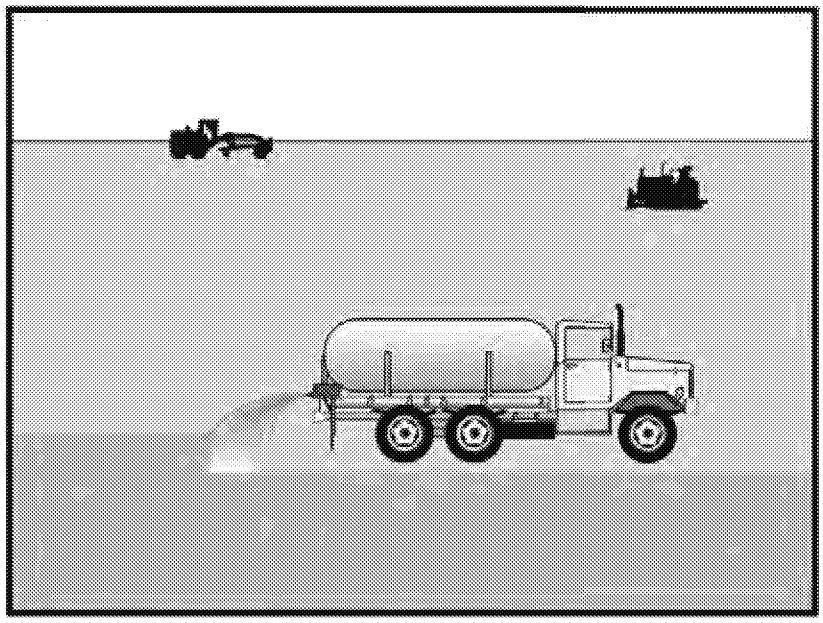

Objectives

EC	Erosion Control	
SE	Sediment Control	☒
TC	Tracking Control	
WE	Wind Erosion Control	☑
NS	Non-Stormwater Management Control	
WM	Waste Management and Materials Pollution Control	

Legend:

☑ **Primary Objective**

☒ **Secondary Objective**

Targeted Constituents

Sediment	☑
Nutrients	
Trash	
Metals	
Bacteria	
Oil and Grease	
Organics	

Potential Alternatives

None

Description and Purpose

Wind erosion or dust control consists of applying water or other dust palliatives as necessary to prevent or alleviate dust nuisance generated by construction activities. Covering small stockpiles or areas is an alternative to applying water or other dust palliatives.

Suitable Applications

Wind erosion control BMPs are suitable during the following construction activities:

- Construction vehicle traffic on unpaved roads
- Drilling and blasting activities
- Sediment tracking onto paved roads
- Soils and debris storage piles
- Batch drop from front-end loaders
- Areas with unstabilized soil
- Final grading/site stabilization

Limitations

- Watering prevents dust only for a short period and should be applied daily (or more often) to be effective.
- Over watering may cause erosion.

ED_002781A_00003896-00884

- Oil or oil-treated subgrade should not be used for dust control because the oil may migrate into drainageways and/or seep into the soil.
- Effectiveness depends on soil, temperature, humidity, and wind velocity.
- Chemically treated sub grades may make the soil water repellant, interfering with long-term infiltration and the vegetation/re-vegetation of the site. Some chemical dust suppressants may be subject to freezing and may contain solvents and should be handled properly.
- Asphalt, as a mulch tack or chemical mulch, requires a 24-hour curing time to avoid adherence to equipment, worker shoes, etc. Application should be limited because asphalt surfacing may eventually migrate into the drainage system.
- In compacted areas, watering and other liquid dust control measures may wash sediment or other constituents into the drainage system.

Implementation

General

California's Mediterranean climate, with short wet seasons and long hot dry seasons, allows the soils to thoroughly dry out. During these dry seasons, construction activities are at their peak, and disturbed and exposed areas are increasingly subject to wind erosion, sediment tracking and dust generated by construction equipment.

Dust control, as a BMP, is a practice that is already in place for many construction activities. Los Angeles, the North Coast, and Sacramento, among others, have enacted dust control ordinances for construction activities that cause dust to be transported beyond the construction project property line.

Recently, the State Air Resources Control Board has, under the authority of the Clean Air Act, started to address air quality in relation to inhalable particulate matter less than 10 microns (PM-10). Approximately 90 percent of these small particles are considered to be dust. Existing dust control regulations by local agencies, municipal departments, public works department, and public health departments are in place in some regions within California.

Many local agencies require dust control in order to comply with local nuisance laws, opacity laws (visibility impairment) and the requirements of the Clean Air Act. The following are measures that local agencies may have already implemented as requirements for dust control from contractors:

- Construction and Grading Permits: Require provisions for dust control plans.
- Opacity Emission Limits: Enforce compliance with California air pollution control laws.
- Increase Overall Enforcement Activities: Priority given to cases involving citizen complaints.
- Maintain Field Application Records: Require records of dust control measures from contractor;
- Stormwater Pollution Prevention Plan: (SWPPP): Integrate dust control measures into SWPPP.

ED_002781A_00003896-00885

Dust Control Practices

Dust control BMPs generally stabilize exposed surfaces and minimize activities that suspend or track dust particles. The following table shows dust control practices that can be applied to site conditions that cause dust. For heavily traveled and disturbed areas, wet suppression (watering), chemical dust suppression, gravel asphalt surfacing, temporary gravel construction entrances, equipment wash-out areas, and haul truck covers can be employed as dust control applications. Permanent or temporary vegetation and mulching can be employed for areas of occasional or no construction traffic. Preventive measures would include minimizing surface areas to be disturbed, limiting onsite vehicle traffic to 15 mph, and controlling the number and activity of vehicles on a site at any given time.

SITE CONDITION	DUST CONTROL PRACTICES								
	Permanent Vegetation	Mulching	Wet Suppression (Watering)	Chemical Dust Suppression	Gravel or Asphalt	Silt Fences	Temporary Gravel Construction Entrances/Equipment Wash Down	Haul Truck Covers	Minimize Extent of Disturbed Area
Disturbed Areas not Subject to Traffic	X	X	X	X	X				X
Disturbed Areas Subject to Traffic			X	X	X		X		X
Material Stock Pile Stabilization			X	X		X			X
Demolition			X				X	X	
Clearing/ Excavation			X	X		X			X
Truck Traffic on Unpaved Roads			X	X	X		X	X	
Mud/Dirt Carry Out					X		X		

Additional preventive measures include:

- Schedule construction activities to minimize exposed area (EC-1, Scheduling).
- Quickly stabilize exposed soils using vegetation, mulching, spray-on adhesives, calcium chloride, sprinkling, and stone/gravel layering.
- Identify and stabilize key access points prior to commencement of construction.
- Minimize the impact of dust by anticipating the direction of prevailing winds.
- Direct most construction traffic to stabilized roadways within the project site.
- Water should be applied by means of pressure-type distributors or pipelines equipped with a spray system or hoses and nozzles that will ensure even distribution.
- All distribution equipment should be equipped with a positive means of shutoff.
- Unless water is applied by means of pipelines, at least one mobile unit should be available at all times to apply water or dust palliative to the project.

ED_002781A_00003896-00886

- If reclaimed waste water is used, the sources and discharge must meet California Department of Health Services water reclamation criteria and the Regional Water Quality Control Board requirements. Non-potable water should not be conveyed in tanks or drain pipes that will be used to convey potable water and there should be no connection between potable and non-potable supplies. Non-potable tanks, pipes, and other conveyances should be marked, "NON-POTABLE WATER - DO NOT DRINK."

- Materials applied as temporary soil stabilizers and soil binders also generally provide wind erosion control benefits.

- Pave or chemically stabilize access points where unpaved traffic surfaces adjoin paved roads.

- Provide covers for haul trucks transporting materials that contribute to dust.

- Provide for wet suppression or chemical stabilization of exposed soils.

- Provide for rapid clean up of sediments deposited on paved roads. Furnish stabilized construction road entrances and vehicle wash down areas.

- Stabilize inactive construction sites using vegetation or chemical stabilization methods.

- Limit the amount of areas disturbed by clearing and earth moving operations by scheduling these activities in phases.

For chemical stabilization, there are many products available for chemically stabilizing gravel roadways and stockpiles. If chemical stabilization is used, the chemicals should not create any adverse effects on stormwater, plant life, or groundwater.

Costs

Installation costs for water and chemical dust suppression are low, but annual costs may be quite high since these measures are effective for only a few hours to a few days.

Inspection and Maintenance

- Inspect and verify that activity-based BMPs are in place prior to the commencement of associated activities. While activities associated with the BMP are under way, inspect weekly during the rainy season and at two-week intervals in the non-rainy season to verify continued BMP implementation.

- Check areas protected to ensure coverage.

- Most dust control measures require frequent, often daily, or multiple times per day attention.

References

Best Management Practices and Erosion Control Manual for Construction Sites, Flood Control District of Maricopa County, Arizona, September 1992.

California Air Pollution Control Laws, California Air Resources Board, 1992.

ED_002781A_00003896-00887

Caltrans, Standard Specifications, Sections 10, "Dust Control"; Section 17, "Watering"; and Section 18, "Dust Palliative".

Prospects for Attaining the State Ambient Air Quality Standards for Suspended Particulate Matter (PM10), Visibility Reducing Particles, Sulfates, Lead, and Hydrogen Sulfide, California Air Resources Board, April 1991.

Stormwater Quality Handbooks Construction Site Best Management Practices (BMPs) Manual, State of California Department of Transportation (Caltrans), November 2000.

ED_002781A_00003896-00888

Stabilized Construction Entrance/Exit TC-1

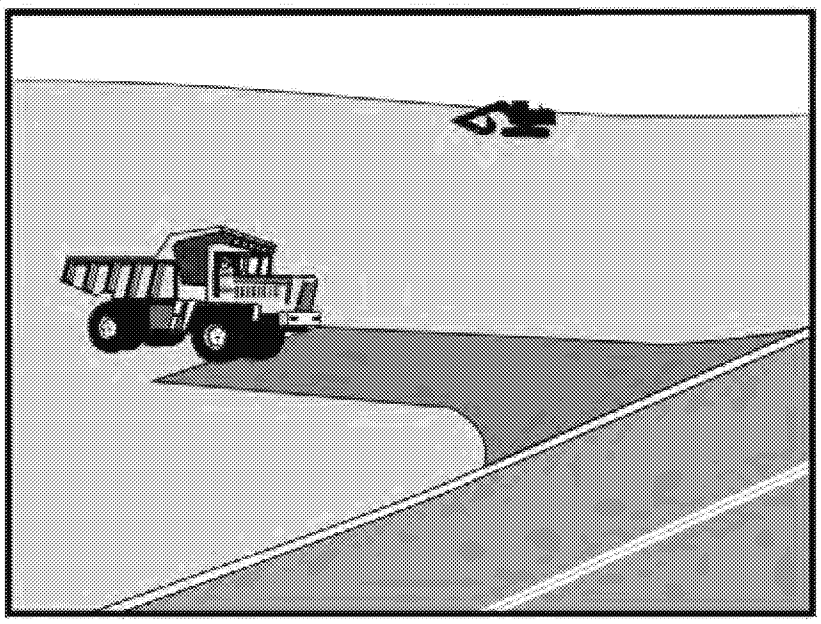

Objectives

EC	Erosion Control	☒
SE	Sediment Control	☒
TC	Tracking Control	☑
WE	Wind Erosion Control	
NS	Non-Stormwater Management Control	
WM	Waste Management and Materials Pollution Control	

Legend:

☑ **Primary Objective**

☒ **Secondary Objective**

Targeted Constituents

Sediment	☑
Nutrients	
Trash	
Metals	
Bacteria	
Oil and Grease	
Organics	

Potential Alternatives

None

Description and Purpose

A stabilized construction access is defined by a point of entrance/exit to a construction site that is stabilized to reduce the tracking of mud and dirt onto public roads by construction vehicles.

Suitable Applications

Use at construction sites:

- Where dirt or mud can be tracked onto public roads.
- Adjacent to water bodies.
- Where poor soils are encountered.
- Where dust is a problem during dry weather conditions.

Limitations

- Entrances and exits require periodic top dressing with additional stones.
- This BMP should be used in conjunction with street sweeping on adjacent public right of way.
- Entrances and exits should be constructed on level ground only.
- Stabilized construction entrances are rather expensive to construct and when a wash rack is included, a sediment trap of some kind must also be provided to collect wash water runoff.

ED_002781A_00003896-00889

Implementation

General

A stabilized construction entrance is a pad of aggregate underlain with filter cloth located at any point where traffic will be entering or leaving a construction site to or from a public right of way, street, alley, sidewalk, or parking area. The purpose of a stabilized construction entrance is to reduce or eliminate the tracking of sediment onto public rights of way or streets. Reducing tracking of sediments and other pollutants onto paved roads helps prevent deposition of sediments into local storm drains and production of airborne dust.

Where traffic will be entering or leaving the construction site, a stabilized construction entrance should be used. NPDES permits require that appropriate measures be implemented to prevent tracking of sediments onto paved roadways, where a significant source of sediments is derived from mud and dirt carried out from unpaved roads and construction sites.

Stabilized construction entrances are moderately effective in removing sediment from equipment leaving a construction site. The entrance should be built on level ground. Advantages of the Stabilized Construction Entrance/Exit is that it does remove some sediment from equipment and serves to channel construction traffic in and out of the site at specified locations. Efficiency is greatly increased when a washing rack is included as part of a stabilized construction entrance/exit.

Design and Layout

- Construct on level ground where possible.
- Select 3 to 6 in. diameter stones.
- Use minimum depth of stones of 12 in. or as recommended by soils engineer.
- Construct length of 50 ft minimum, and 30 ft minimum width.
- Rumble racks constructed of steel panels with ridges and installed in the stabilized entrance/exit will help remove additional sediment and to keep adjacent streets clean.
- Provide ample turning radii as part of the entrance.
- Limit the points of entrance/exit to the construction site.
- Limit speed of vehicles to control dust.
- Properly grade each construction entrance/exit to prevent runoff from leaving the construction site.
- Route runoff from stabilized entrances/exits through a sediment trapping device before discharge.
- Design stabilized entrance/exit to support heaviest vehicles and equipment that will use it.
- Select construction access stabilization (aggregate, asphaltic concrete, concrete) based on longevity, required performance, and site conditions. Do not use asphalt concrete (AC) grindings for stabilized construction access/roadway.

ED_002781A_00003896-00890

- If aggregate is selected, place crushed aggregate over geotextile fabric to at least 12 in. depth, or place aggregate to a depth recommended by a geotechnical engineer. A crushed aggregate greater than 3 in. but smaller than 6 in. should be used.
- Designate combination or single purpose entrances and exits to the construction site.
- Require that all employees, subcontractors, and suppliers utilize the stabilized construction access.
- Implement SE-7, Street Sweeping and Vacuuming, as needed.
- All exit locations intended to be used for more than a two-week period should have stabilized construction entrance/exit BMPs.

Inspection and Maintenance

- Inspect and verify that activity–based BMPs are in place prior to the commencement of associated activities. While activities associated with the BMPs are under way, inspect weekly during the rainy season and of two-week intervals in the non-rainy season to verify continued BMP implementation.
- Inspect local roads adjacent to the site daily. Sweep or vacuum to remove visible accumulated sediment.
- Remove aggregate, separate and dispose of sediment if construction entrance/exit is clogged with sediment.
- Keep all temporary roadway ditches clear.
- Check for damage and repair as needed.
- Replace gravel material when surface voids are visible.
- Remove all sediment deposited on paved roadways within 24 hours.
- Remove gravel and filter fabric at completion of construction

Costs

Average annual cost for installation and maintenance may vary from $1,200 to $4,800 each, averaging $2,400 per entrance. Costs will increase with addition of washing rack, and sediment trap. With wash rack, costs range from $1,200 - $6,000 each, averaging $3,600 per entrance.

References

Manual of Standards of Erosion and Sediment Control Measures, Association of Bay Area Governments, May 1995.

National Management Measures to Control Nonpoint Source Pollution from Urban Areas, USEPA Agency, 2002.

Proposed Guidance Specifying Management Measures for Sources of Nonpoint Pollution in Coastal Waters, Work Group Working Paper, USEPA, April 1992.

ED_002781A_00003896-00891

Stormwater Quality Handbooks Construction Site Best Management Practices (BMPs) Manual, State of California Department of Transportation (Caltrans), November 2000.

Stormwater Management of the Puget Sound Basin, Technical Manual, Publication #91-75, Washington State Department of Ecology, February 1992.

Virginia Erosion and Sedimentation Control Handbook, Virginia Department of Conservation and Recreation, Division of Soil and Water Conservation, 1991.

Guidance Specifying Management Measures for Nonpoint Pollution in Coastal Waters, EPA 840-B-9-002, USEPA, Office of Water, Washington, DC, 1993.

Water Quality Management Plan for the Lake Tahoe Region, Volume II, Handbook of Management Practices, Tahoe Regional Planning Agency, November 1988.

ED_002781A_00003896-00892

Stabilized Construction Entrance/Exit TC-1

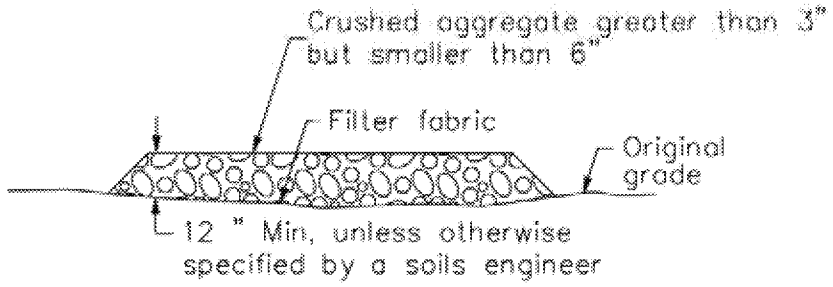

SECTION B–B
NTS

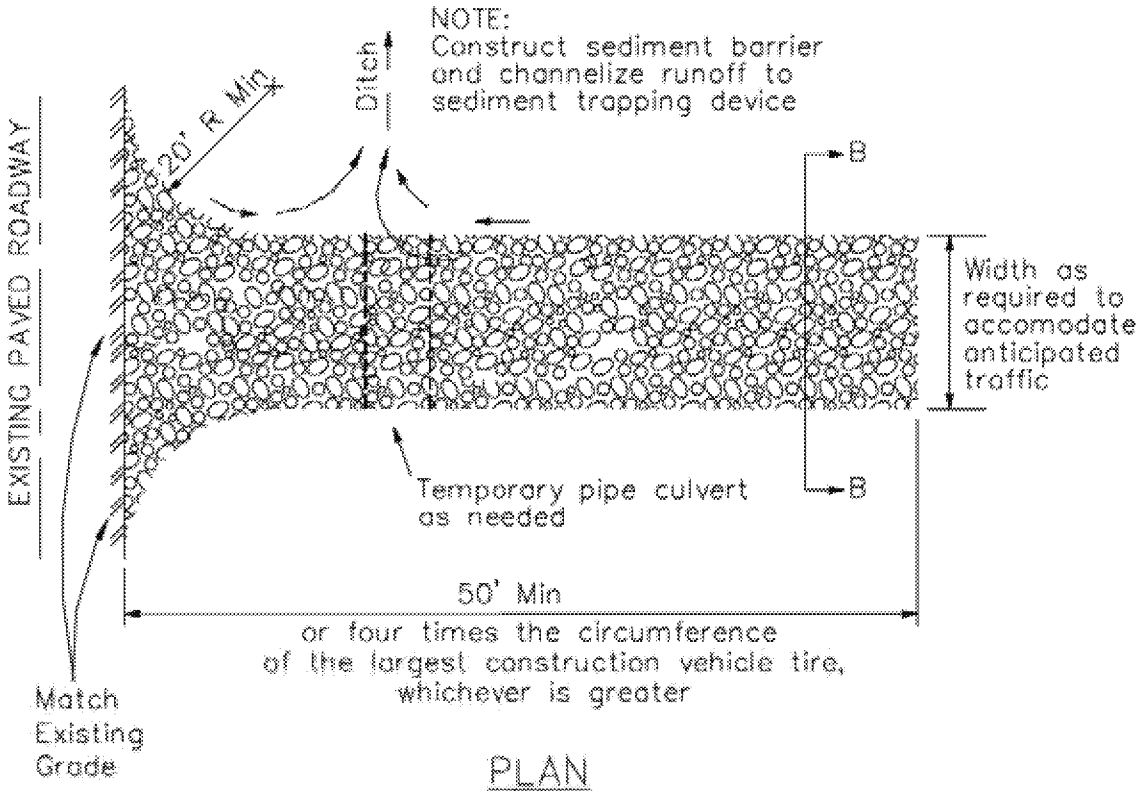

PLAN
NTS

ED_002781A_00003896-00893

Stabilized Construction Entrance/Exit TC-1

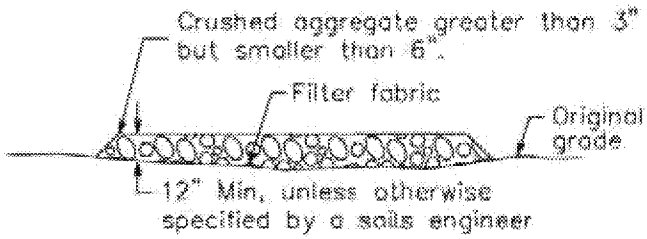

SECTION B–B
NTS

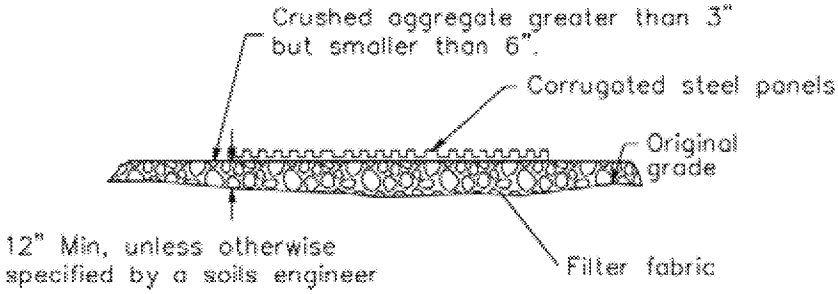

SECTION A–A
NOT TO SCALE

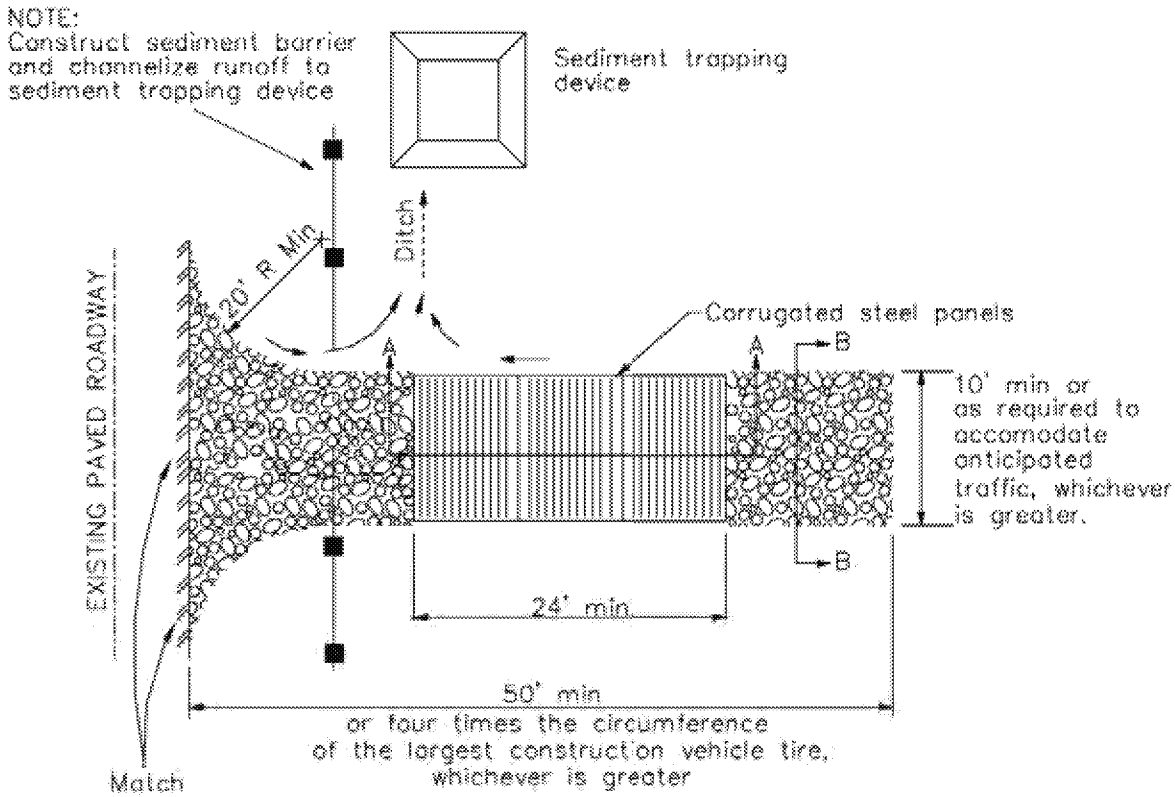

PLAN
NTS

ED_002781A_00003896-00894

Stabilized Construction Roadway TC-2

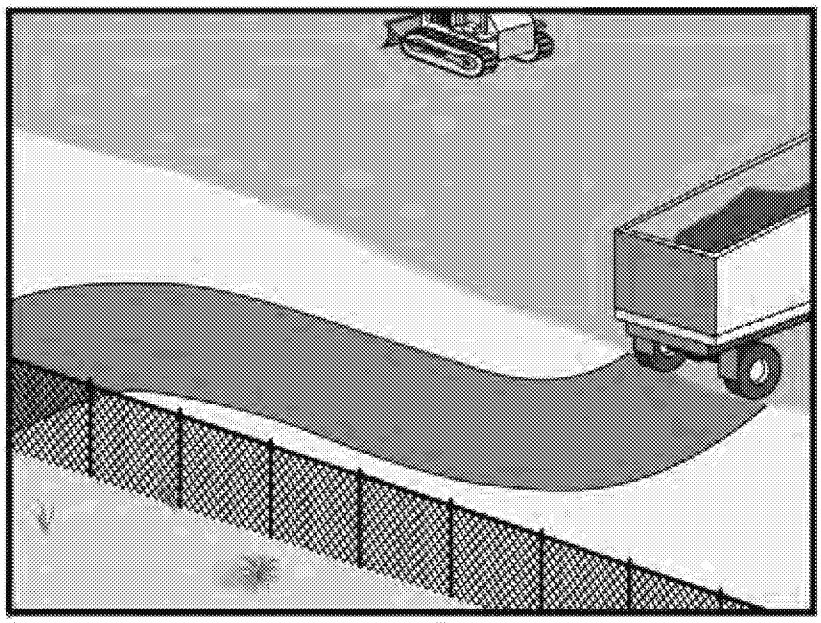

Objectives

EC	Erosion Control	☒
SE	Sediment Control	☒
TC	Tracking Control	☑
WE	Wind Erosion Control	
NS	Non-Stormwater Management Control	
WM	Waste Management and Materials Pollution Control	

Legend:

☑ **Primary Objective**

☒ **Secondary Objective**

Targeted Constituents

Sediment	☑
Nutrients	
Trash	
Metals	
Bacteria	
Oil and Grease	
Organics	

Potential Alternatives

None

Description and Purpose

Access roads, subdivision roads, parking areas, and other onsite vehicle transportation routes should be stabilized immediately after grading, and frequently maintained to prevent erosion and control dust.

Suitable Applications

This BMP should be applied for the following conditions:

- Temporary Construction Traffic:
  - Phased construction projects and offsite road access
  - Construction during wet weather
- Construction roadways and detour roads:
  - Where mud tracking is a problem during wet weather
  - Where dust is a problem during dry weather
  - Adjacent to water bodies
  - Where poor soils are encountered

Limitations

- The roadway must be removed or paved when construction is complete.

ED_002781A_00003896-00895

- Certain chemical stabilization methods may cause stormwater or soil pollution and should not be used. See WE-1, Wind Erosion Control.
- Management of construction traffic is subject to air quality control measures. Contact the local air quality management agency.
- Materials will likely need to be removed prior to final project grading and stabilization.
- Use of this BMP may not be applicable to very short duration projects.

Implementation

General

Areas that are graded for construction vehicle transport and parking purposes are especially susceptible to erosion and dust. The exposed soil surface is continually disturbed, leaving no opportunity for vegetative stabilization. Such areas also tend to collect and transport runoff waters along their surfaces. During wet weather, they often become muddy quagmires that generate significant quantities of sediment that may pollute nearby streams or be transported offsite on the wheels of construction vehicles. Dirt roads can become so unstable during wet weather that they are virtually unusable.

Efficient construction road stabilization not only reduces onsite erosion but also can significantly speed onsite work, avoid instances of immobilized machinery and delivery vehicles, and generally improve site efficiency and working conditions during adverse weather

Installation/Application Criteria

Permanent roads and parking areas should be paved as soon as possible after grading. As an alternative where construction will be phased, the early application of gravel or chemical stabilization may solve potential erosion and stability problems. Temporary gravel roadway should be considered during the rainy season and on slopes greater than 5%.

Temporary roads should follow the contour of the natural terrain to the maximum extent possible. Slope should not exceed 15%. Roadways should be carefully graded to drain transversely. Provide drainage swales on each side of the roadway in the case of a crowned section or one side in the case of a super elevated section. Simple gravel berms without a trench can also be used.

Installed inlets should be protected to prevent sediment laden water from entering the storm sewer system (SE-10, Storm Drain Inlet Protection). In addition, the following criteria should be considered.

- Road should follow topographic contours to reduce erosion of the roadway.
- The roadway slope should not exceed 15%.
- Chemical stabilizers or water are usually required on gravel or dirt roads to prevent dust (WE-1, Wind Erosion Control).
- Properly grade roadway to prevent runoff from leaving the construction site.
- Design stabilized access to support heaviest vehicles and equipment that will use it.

ED_002781A_00003896-00896

- Stabilize roadway using aggregate, asphalt concrete, or concrete based on longevity, required performance, and site conditions. The use of cold mix asphalt or asphalt concrete (AC) grindings for stabilized construction roadway is not allowed.
- Coordinate materials with those used for stabilized construction entrance/exit points.
- If aggregate is selected, place crushed aggregate over geotextile fabric to at least 12 in. depth. A crushed aggregate greater than 3 in. but smaller than 6 in. should be used.

Inspection and Maintenance

- Inspect and verify that activity–based BMPs are in place prior to the commencement of associated activities. While activities associated with the BMP are under way, impact weekly during the rainy season and of two-week intervals in the non-rainy season to verify continued BMP implementation.
- Keep all temporary roadway ditches clear.
- When no longer required, remove stabilized construction roadway and re-grade and repair slopes.
- Periodically apply additional aggregate on gravel roads.
- Active dirt construction roads are commonly watered three or more times per day during the dry season.

Costs

Gravel construction roads are moderately expensive, but cost is often balanced by reductions in construction delay. No additional costs for dust control on construction roads should be required above that needed to meet local air quality requirements.

References

Blueprint for a Clean Bay: Best Management Practices to Prevent Stormwater Pollution from Construction Related Activities; Santa Clara Valley Nonpoint Source Pollution Control Program, 1995.

Coastal Nonpoint Pollution Control Program; Program Development and Approval Guidance, Working Group, Working Paper; USEPA, April 1992.

Manual of Standards of Erosion and Sediment Control Measures, Association of Bay Area Governments, May 1995.

Stormwater Quality Handbooks Construction Site Best Management Practices (BMPs) Manual, State of California Department of Transportation (Caltrans), November 2000.

Stormwater Management for Construction Activities, Developing Pollution Prevention Plans and Best Management Practices, EPA 832-R-92005; USEPA, April 1992.

Stormwater Management of the Puget Sound Basin, Technical Manual, Publication #91-75, Washington State Department of Ecology, February 1992.

ED_002781A_00003896-00897

Virginia Erosion and Sedimentation Control Handbook, Virginia Department of Conservation and Recreation, Division of Soil and Water Conservation, 1991.

Water Quality Management Plan for the Lake Tahoe Region, Volume II, Handbook of Management Practices, Tahoe Regional Planning Agency, November 1988.

ED_002781A_00003896-00898

Water Conservation Practices NS-1

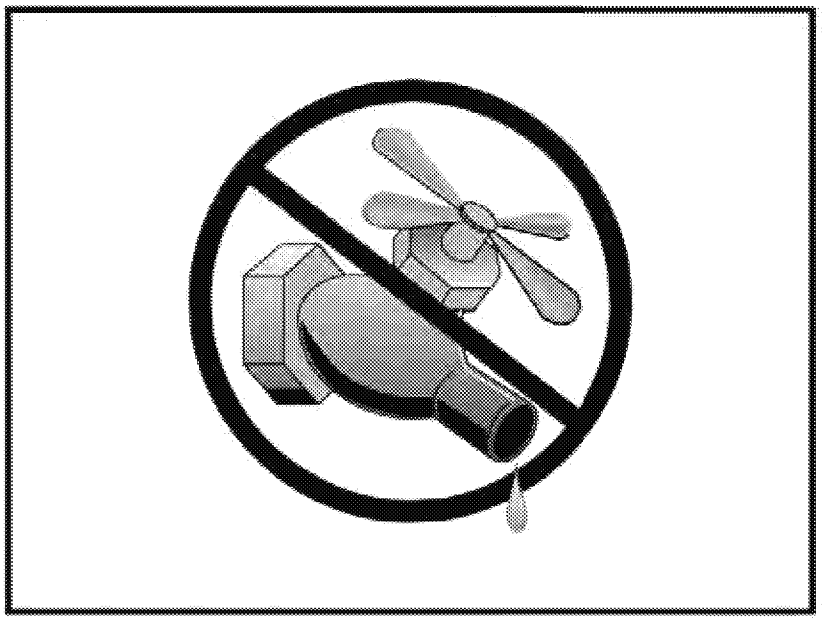

Objectives		
EC	Erosion Control	☒
SE	Sediment Control	☒
TR	Tracking Control	
WE	Wind Erosion Control	
NS	Non-Stormwater Management Control	☑
WM	Waste Management and Materials Pollution Control	

Legend:
☑ Primary Objective
☒ Secondary Objective

Targeted Constituents	
Sediment	☑
Nutrients	
Trash	
Metals	
Bacteria	
Oil and Grease	
Organics	

Potential Alternatives

None

Description and Purpose

Water conservation practices are activities that use water during the construction of a project in a manner that avoids causing erosion and the transport of pollutants offsite. These practices can reduce or eliminate non-stormwater discharges.

Suitable Applications

Water conservation practices are suitable for all construction sites where water is used, including piped water, metered water, trucked water, and water from a reservoir.

Limitations

- None identified.

Implementation

- Keep water equipment in good working condition.
- Stabilize water truck filling area.
- Repair water leaks promptly.
- Washing of vehicles and equipment on the construction site is discouraged.
- Avoid using water to clean construction areas. If water must be used for cleaning or surface preparation, surface should be swept and vacuumed first to remove dirt. This will minimize amount of water required.

ED_002781A_00003896-00899

- Direct construction water runoff to areas where it can soak into the ground or be collected and reused.
- Authorized non-stormwater discharges to the storm drain system, channels, or receiving waters are acceptable with the implementation of appropriate BMPs.
- Lock water tank valves to prevent unauthorized use.

Costs

The cost is small to none compared to the benefits of conserving water.

Inspection and Maintenance

- Inspect and verify that activity based BMPs are in place prior to the commencement of authorized non-stormwater discharges.
- Inspect BMPs subject to non-stormwater discharges daily while non-stormwater discharges are occuring.
- Repair water equipment as needed to prevent unintended discharges.
  - Water trucks
  - Water reservoirs (water buffalos)
  - Irrigation systems
  - Hydrant connections

References

Stormwater Quality Handbooks - Construction Site Best Management Practices (BMPs) Manual, State of California Department of Transportation (Caltrans), November 2000.

ED_002781A_00003896-00900