NORTON

engineering

Alkylation Technology Study

FINAL REPORT

South Coast Air Quality Management District (SCAQMD)

Prepared by: S. Zhang, L. Wilkinson, L. Ogunde, R. Todd, C. Steves, S. Haydel

9/9/2016

Table of Contents

1. Introduction 4
2. Executive Summary 5
3. Modified Hydrofluoric Acid Alkylation 9
   3.1 Reaction Chemistry 9
   3.2 Status of Development 9
   3.3 Technology Summary 11
   3.4 Schematic Flow Diagram 12
      3.4.1 Simple Flowsheet for Modified HF Alkylation Technology 12
   3.5 Hazards and Safety Issues Related to Hydrofluoric Acid 12
   3.6 Storage and Transportation 14
4. Sulfuric Acid Alkylation 15
   4.1 Reaction Chemistry 15
   4.2 Status of Development 15
   4.3 Technology Summary 17
   4.4 Schematic Flow Diagram 18
      4.4.1 Simple Flowsheet for Stratco Technology 18
      4.4.2 Simple Flowsheet for ExxonMobil Technology 19
      4.4.3 Simple Flowsheet for CB&I CDAlky Technology 20
   4.5 Hazards and Safety Issues Related to Sulfuric Acid 20
   4.6 Storage and Transportation 21
   4.7 On-site Acid Regeneration 21
   4.8 Risk of Acid Release 22
5. Solid Acid Alkylation 23
   5.1 Reaction Chemistry 23
   5.2 Status of Development 24
   5.3 Technology Summary 25
   5.4 Schematic Flow Diagram 26
      5.4.1 Simple Flowsheet for AlkyClean Technology 26
      5.4.2 Simple Flowsheet for K-SAAT Technology 27
   5.5 Hazard and Safety Related to Solid Acid Catalyst 27
   5.6 Storage and Transportation 27
   5.7 Catalyst Regeneration 28
6. Ionic Liquid Alkylation 29

6.1 Reaction Chemistry 29
6.2 Status of Development 29
6.3 Technology Summary 30
6.4 Schematic Flow Diagram 31
6.4.1 Simple Flowsheet for CUP / PetroChina Pilot Plant 31
6.4.2 Simple Flowsheet for the PetroChina Industrial Retrofit of H_2SO_4 Alkylation Unit 32
6.4.3 Simple Flowsheet for Chevron Patented Process 32
6.5 Hazard and Safety Related to Ionic Liquid Catalyst 33
6.6 Storage and Transportation 33
7. Solid Onium Poly Alkylation (Alkad Process) 34
7.1 Reaction Chemistry 34
7.2 Status of Development 34
8. Fixed Bed Alkylation 35
8.1 Reaction Chemistry 35
8.2 Status of Development 35
9. Slurry Catalyst Alkylation 36
9.1 Reaction Chemistry 36
9.2 Status of Development 36
10. Soluble Catalyst Alkylation 37
11. Conclusion and Recommendation 38
12. Cost Estimate 39

Appendix	*Document No.*	*Document Title*	*Number of Pages / Sheets*
1	15-5087-CE-01	25,000 BPD Alkylation Unit Cost Estimate	2

1. Introduction

Norton Engineering Consultants, Inc. (NEC) has been commissioned by the South Coast Air Quality Management District (SCAQMD) to conduct an independent study to review and evaluate commercially available options for replacing current HF Alkylation units in the District.

The scope of the study that SCAQMD has contracted NEC to perform is to research and evaluate alternative alkylation technologies that are commercially available and potentially feasible for switching existing HF Alkylation process. The review and evaluation of such technologies in this study include, as required by the SCAQMD, the following aspects:

- Commercial availability, current development/installation status, and technology provider contact information
- Efficiency and effectiveness in producing alkylate product to meet refinery product specs
- Chemical hazard and health/environment impacts, any requirements for Risk Management Plans
- Requirements and safety for transportation and storage
- Order of magnitude cost estimates (TIC with contingence of ±50%) for top three most feasible and/or commercially available technologies for replacing existing Modified HF Alkylation process in the District.
- Cost of catalyst and catalyst life, if applicable

In this report, NEC has researched and reviewed several possible alternative alkylation technologies to the two current HF Alkylation units in the District, including

- Sulfuric Acid Alkylation
- Solid Acid Alkylation
- Ionic Liquid Alkylation
- Solid Onium Poly Alkylation
- Fixed Bed Alkylation
- Slurry Catalyst Alkylation
- Soluble Catalyst Alkylation

The commercial status of each technology is reviewed, along with a basic overview of the reaction chemistry, process scheme(s), and any safety implications that may arise. The rough cost estimates are attached at the end of the report (Appendix 1).

ED_002700_00008335-00004

2. Executive Summary

From the list of seven alkylation technologies considered, Sulfuric Acid Alkylation was identified as the most mature technology with widespread use and commercialization throughout refineries worldwide. Sulfuric Acid Alkylation is currently offered as a licensed technology by DuPont (Stratco), ExxonMobil, and CB&I. Kellogg no longer offers their Sulfuric Acid Alkylation technology. Of the three licensors, DuPont's Stratco technology has the largest installed base and operating experience, see Figure 1.

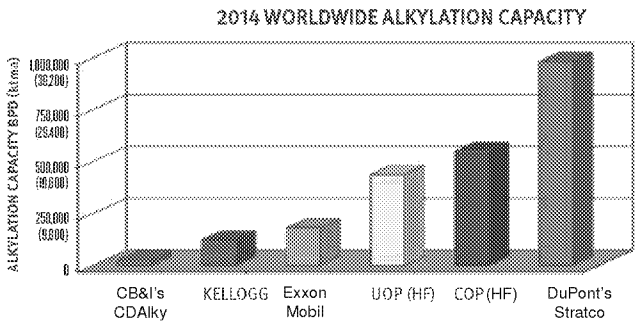

Figure 1: Summary of installed capacity for alkylation worldwide by technology provider.[1] CB&I's CDAlky, Kellogg, ExxonMobil and DuPont's Stratco are all Sulfuric Acid Alkylation Processes. The Kellogg technology is no longer commercially available. UOP and COP are Hydrofluoric Acid Processes (now both under UOP)

Changing an alkylation unit from HF to sulfuric acid will greatly reduce the potential for an acid vapor cloud to be formed upon release to the atmosphere. However, there will be a significant increase in acid transportation by rail or roadway to bring concentrated sulfuric acid (approximately 99 wt% H_2SO_4) into the refinery, and remove spent acid for off-site regeneration. Acid transportation is routinely practiced in urban/densely populated areas in the United States.[2] Currently in the District, Phillips 66 has an on-site regeneration facility, while Tesoro transports acid to/from a regeneration facility about 5 miles from the refinery. In the Bay Area AQMD, Tesoro has an on-site regeneration facility, and Chevron has an off-site regeneration facility in the immediate neighboring area with acid pipeline for acid supply and return.

Solid Acid Alkylation is a relatively new technology, with CB&I having commissioned just one plant in China in 2015 with an operating capacity of 2,700 BPD.[3] KBR have several solid acid alkylation plants in the design phase with startup still a year or two away. UOP developed a solid acid catalyst technology called "Alkylene" that employed continuous catalyst regeneration, but no commercial unit was built and UOP has not progressed with commercialization of the technology[4]. With just one operating reference plant in China, Solid Acid Alkylation is still in the early stages of commercialization. Unlike Sulfuric Acid Alkylation, which can repurpose some components of the HF Alkylation unit for sulfuric acid service to reduce costs [5], Solid Acid Alkylation would require new reactor equipment to be installed. The one advantage solid acid alkylation provides over HF and Sulfuric Acid Alkylation is complete elimination of the safety concerns related to volatile acid vapor clouds and acid transportation.

Ionic Liquid Alkylation is one emerging technology with the potential for commercialization. CUP/PetroChina, Chevron and UOP are all working on alkylation technology using Ionic Liquid but have not advanced beyond

[1] DuPont, *STRATCO Alkylation Technology*. 2015.

[2] NorFalco, *NorFalco plants and terminals map*, in *Sulfuric Acid Handbook*. 2007.

[3] *China's Wonfull starts up world's first solid acid catalyst alkylation unit*, in *Hydrocarbon Processing*. 2015.

[4] Email correspondence with UOP on August 24, 2016

[5] J.R. Peterson, *The Stratco AlkySafe Process: Low Cost Conversion/Expansion from HF to H2SO4 Alkylation.*

pilot plant testing. Therefore, this technology will have limited interest from refineries in the District given a commercial reference plant is not currently in operation.

Solid Onium Poly Alkylation, which goes under the trade name "Alkad", is a similar alternative to the modified HF (ReVAP) process. The Alkad process adds an amine/nitrogen-containing polymer to reduce the vapor pressure of HF upon a release to atmosphere. Given ReVAP is already in use at two refineries in the District, simply changing the additive to create another modified HF process is not considered a suitable option. Hence, Solid Onium Poly Alkylation would not be a viable alternative to HF Alkylation for the District.

Fixed Bed Alkylation is a technology that combines the liquid acid phase within a solid matrix to perform the alkylation reaction. Haldor Topsøe developed this technology and have since abandoned it, ruling Fixed Bed Alkylation out as a technology that is proven and commercially available. The Slurry Catalyst Alkylation process is a recent development by UOP that performs the alkylation reaction in a distillation tower configuration. A finely distributed solid catalyst material is injected into the reactor feed that passes down through the trays of a distillation tower. However, no reference to pilot plant test data nor a commercially operating plant could be found, also ruling out this technology. No active research or literature could be found that references Soluble Catalyst Alkylation, also ruling out this as a viable alkylation technology.

Based on our preliminary review, Sulfuric Acid Alkylation and Solid Acid Alkylation are the two options that have shown enough commercial development to support the conversion of an existing HF Alkylation Unit, although Solid Acid Alkylation technology is still in the early phases of commercial implementation. A brief summary of technologies that are considered developed for commercialization are presented in Table 1.

Unit Conversion and Constructability Issues

While there are several references describing the conversion of an HF Alkylation unit to a Sulfuric Acid Alkylation unit in the literature,[5, 6, 7] there are no references that provide a case study for this particular conversion being performed in a US refinery. With conversion to either of the two options that have shown commercial development (sulfuric acid and solid acid), it is expected that the fractionation system of a HF Alkylation unit can be re-used, based on the lower required isobutane to olefin ratio required with Sulfuric Acid or Solid Acid Alkylation compared to HF Alkylation. Some equipment dedicated to HF regeneration or removal from product streams (i.e. product defluorinators) would be removed from service in a conversion to sulfuric acid or solid acid technology, and although re-use of this equipment in the conversion may be possible, this has not been reviewed in detail in this phase of the evaluation. Similarly, a more detailed review of metallurgy utilized in an HF Alkylation unit and acceptable metallurgy in a sulfuric acid or solid acid system would have to be conducted to more rigorously identify all required upgrades and costs for a unit conversion.

Plot area for a Sulfuric Acid Alkylation unit (without onsite acid regeneration) or Solid Acid Alkylation unit is comparable to that for an HF Alkylation unit, although this is somewhat dependent on the capacity of the unit, as a large capacity alkylation unit would require multiple reactors for sulfuric acid or solid catalyst systems. If onsite acid regeneration is to be performed, the footprint of the Sulfuric Acid Alkylation unit will increase significantly. The ideal construction plan for conversion of a HF Alkylation Unit to either Sulfuric Acid or Solid Acid Alkylation technology would involve pre-shutdown construction of a new reactor section (including associated refrigeration, neutralization, and/or regeneration equipment as appropriate to the technology) on an empty plot space adjacent to the existing unit. With pre-shutdown construction, the shutdown time for final conversion to the new technology can be minimized (potentially 60 days), thus minimizing the lost margin associated with shutdown of the unit. If there is inadequate space for a new reactor section to be constructed pre-shutdown, then the conversion timing would be significantly extended (to 6 months or more) to account for demolition of the existing

[6] J.R. Peterson, J.B. Scott, *Method for Converting a Hydrogen Fluoride Alkylation Unit to a Sulfuric Acid Alkylation Unit.* 1994, Stratco, Inc., US Patent 5,284,990

[7] W. Cross, C. Kapraun, T. Vogt, M. Korpelshoek, *Safer with Sulfur*, in *Hydrocarbon Engineering.* 2010.

HF reactor system and site preparation before the new reactor section could be constructed. The lost margin associated with an extended shutdown would be significantly higher if the existing plot space is to be re-used for the new reactor section.

ED_002700_00008335-00007

Table 1: Summary of commercially available alkylation technologies

	Stratco	ExxonMobil	CDAlky	AlkyClean	K-SAAT
Licensor / Catalyst Vendor	DuPont	ExxonMobil	CB&I	CB&I / Albemarle	KBR / Exelus
Catalyst	Sulfuric acid	Sulfuric acid	Sulfuric acid	Solid acid	Solid acid
Reactor Configuration	Shell & tube heat exchanger with impeller and circulating tube	Multiple CSTRs in series	Vertical reactor with proprietary static mixer	Multiple fixed bed reactors	Multistage fixed bed reactors
Reaction Temperature	40 to 50 °F	40 to 50 °F	N/A	120 to 190 °F	140 to 160 °F
Reaction Pressure	~ 60 psig	10 to 15 psig	N/A	290 psig	N/A
Reaction Phase	Acid-continuous emulsion	Acid-continuous emulsion	N/A	Liquid	Liquid
Cooling Method	Indirect effluent refrigeration	Auto refrigeration	Auto refrigeration	(Not required)	(Not required)
Catalyst Regeneration	Onsite or by vendor	Onsite or by vendor	Onsite or by vendor	Mild: Isobutane + dissolved hydrogen Full: Hydrogen gas	Full only: Hydrogen gas
Isobutane/olefin Ratio	8:1 or greater	8:1 or greater	N/A	8:1 to 15:1	8:1 to 15:1
Alkylate Yield (vol/vol olefin)	1.78	1.78	1.78	1.7 to 1.8	1.82
Major Equipment Items Needed to Revamp Existing HF Alkylation Unit	- Reactor with tube bundle and mixer - Acid settler PCV - Suction trap flash drum and effluent treatment section - Refrigeration section with compressor	- Reactor with impellers - Acid settler - Effluent treatment section - Refrigeration section with compressor	- Reactor - Refrigeration section	- Pretreatment beds - Set of 3 to 5 vertical fixed bed reactors - Hydrogen supply and equipment	- Pretreatment beds - Set of 2 multistage fixed bed reactors - Hydrogen supply and equipment
Contact Information	Kevin Bockwinkel Tel: 1-913-327-356 kevin.b.bockwindel@dupont.com	Christopher Dean Tel: 1-832-625-6982	Arvids Judzis Tel: 1-832-513-1388 ajudzis@cbi.com	Arvids Judzis Tel: 1-832-513-1388 ajudzis@cbi.com	Gautham Krishnaiah Tel: 1-713-753-8528 gautham.krishnaiah@kbr.com

ED_002700_00008335-00008

3. Modified Hydrofluoric Acid Alkylation

3.1 Reaction Chemistry

The primary reaction in Hydrofluoric Acid Alkylation is the combination of an isoparaffin with an olefin to make a high-octane product in the presence of an acid catalyst,

$$C_4H_{10} \text{ (isobutane)} + C_4H_8 \text{ (butylene)} \xrightarrow{Acid} C_8H_{18} \text{ (2,2,4 trimethyl-pentane)} + \text{Heat}$$

There are also a series of side reactions involving olefin and acid that produce undesired, high molecular weight polymer species. These polymer species reduce octane number and increase the end point of the alkylate product. Another hydrogen transfer side reaction (more common with propylene than with butylene) produces both a saturated C3 or C4 molecule and 2,2,4 trimethyl-pentane, but consumes twice as much isobutane as the desired reaction. [8, 9, 10]

The most important variables that determine alkylate yield and selectivity include temperature, acid strength, olefin space velocity, and isobutane concentration. Units that operate with significant concentrations of propylene or amylene feedstock may experience higher hydrogen transfer reactions, which will increase the consumption of isobutane and decrease the yield of alkylate, while increasing yield of propane (for propylene processing) or isopentane (for amylene processing).

3.2 Status of Development

Hydrofluoric Acid Alkylation is a well-established technology developed in the 1940's and practiced worldwide for the manufacture of high octane alkylate for use in gasoline blending. Table 2 summarizes the major types of installed units of this technology. There are a total of 48 Hydrofluoric Acid Alkylation Units installed at refineries in the US.

Table 2: Status of HF Alkylation technology

Technology	Licensor	Description
Pumped Acid (historic UOP)	UOP	Acid circulation between the settler and reactor systems is accomplished with an acid pump.[11]
Natural Circulation (historic Phillips/COP)	UOP	Acid circulation between the settler and reactor systems is accomplished by using "natural" circulation based on the density differences between the hydrocarbon and the acid phases.[12]

[8] H. Lerner, *Exxon Sulfuric Acid Alkylation Technology*, in *Handbook of Petroleum Refining Processes*, R.A. Meyers, Editor. 1996, McGraw-Hill.

[9] K. Kranz. *Intro to Alkylation Chemistry - Mechanisms, Operating Variables, and Olefin Interactions*. 2008.

[10] L.F. Albright, *Alkylation of Isobutane with C3−C5 Olefins: Feedstock Consumption, Acid Usage, and Alkylate Quality for Different Processes*. Industrial & Engineering Chemistry Research, 2002. **41**(23): p. 5627-5631.

[11] K.A. Detrick, J.F. Himes, J.M. Meister, F. Nowak, *UOP HF Alkylation Technology*, in *Handbook of Petroleum Refining Process*, R.A. Meyers, Editor. 2003, McGraw-Hill.

[12] M.L. Gravley, *Conoco Phillips Reduced Volatility Alkylation Process (ReVAP)*, in *Handbook of Petroleum Refining Process*, R.A. Meyers, Editor. 2003, McGraw-Hill.

Modified Hydrofluoric Acid Alkylation (MHF, or ReVAP) was developed by Mobil and Phillips as a safety enhancement for existing Hydrofluoric Acid Alkylation Units.[12] Through the use of an additive (the identity of which is a trade secret), the volatility of Hydrofluoric Acid is suppressed which increases the safety of these units and reduces the offsite impact from a potential leak. Additional unit modifications are required with use of this technology to recover the additive and prevent it from contaminating the alkylate product. There are currently 4 units in the US that employ MHF.[13,14]

[13] R.G. Abbott, R.P. Williams, M.M. Johnson, J.W. Vanderveen, *Isoparaffin-olefin Alkylation.* 1997, Phillips Petroleum Company., US Patent 5,654,251

[14] P. Pryor, *Alkylation Current Events.* 2001

3.3 Technology Summary

Table 3: HF Alkylation technology summary

	HF Acid [11, 12]
Reactor configuration	Shell & tube heat exchanger
Cooling method	Cooling water through tubes of shell and tube heat exchanger
Reaction temperature	80 to 100°F
Reaction pressure	~100 to 120 psig
Reaction phase	Acid-continuous emulsion
isobutane/olefin ratio	12:1 to 14:1
Acid/hydrocarbon ratio	50% / 50%
Acid consumption rate	0.001 to 0.002 lb/gal alkylate
Alkylate Yield	1.77 bbl alkylate/bbl olefin (C3/C4 mix)
Olefin space velocity	0.3 to 0.5 hr^{-1}
Equipment needed for MHF revamp of existing HF Alkylation Unit	- Additive recovery column - Additive storage tank and transfer system - Reactor/settler upgrades (if required to maintain reactor capacity with use of additive)
Contact Information	J. Mark Houdek – Honeywell UOP Tel: 1-847-391-2167 Mark.houdek@uop.com

The regeneration of HF in a HF Alkylation unit is part of the alkylation unit design. Therefore, considering the acid that is recovered within the unit, the actual overall acid consumption is much lower than what it would be for a typical Sulfuric Acid Alkylation unit without acid regeneration system.

ED_002700_00008335-00011

3.4 Schematic Flow Diagram

3.4.1 Simple Flowsheet for Modified HF Alkylation Technology

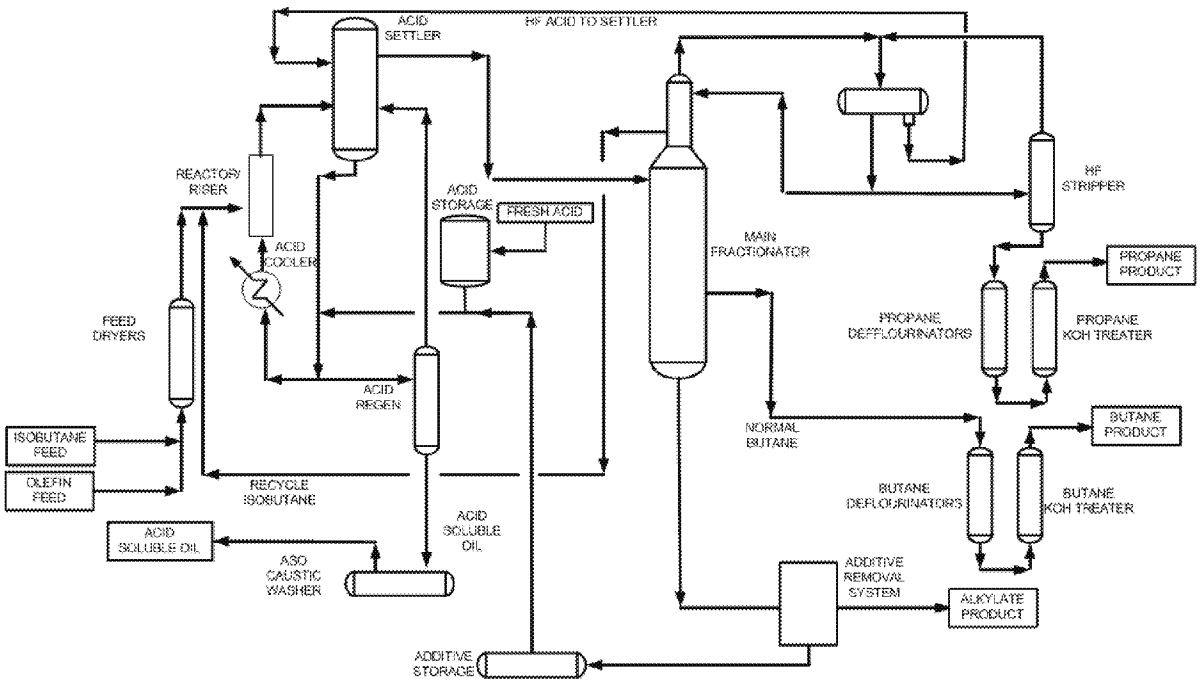

Figure 2: Simple flowsheet for modified HF Alkylation technology

3.5 Hazards and Safety Issues Related to Hydrofluoric Acid

- HF is an extremely hazardous material. Human contact with this acid can lead to severe burns of the skin or lungs (if inhaled), and death can result from significant exposure if not immediately and adequately treated. The IDLH (immediately dangerous to life and health) limit for HF Acid from NIOSH is 30 ppm.[15, 16, 17]
- MHF (HF and additive together) will still cause severe burns if it comes into contact with unprotected tissue. The additive itself (separate from HF acid) is utilized in other refinery processes and does not exhibit any acute toxic effects on humans, although caution is suggested when handling this material.[15, 18]
- HF Acid has a relatively low boiling point (67 °F) and readily becomes a vapor with high vapor density (2.21 @ 68 °F) when released to the atmosphere. Dispersion experiments conducted with releases of HF acid (non-modified) from pressurized sources and elevated temperatures (as would be expected from an alkylation unit leak) showed that heavy aerosol clouds of HF can be created

[15] P. Myers, K. Mudan, H. Hachmuth, *The Risks of HF and Sulfur Acid Alkylation.* 1991.
[16] Honeywell, *Hydrogen Flouride 100% MSDS.* 2015.
[17] USEPA, *Hydrogen Fluoride Study - Report to Congress Section 112(n)(6) Clean Air Act As Amended.* 1993.
[18] S.T. Maher, G.D. Kaiser, *Evaluation of Modified HF Alkylation Catalyst, in Torrance Refinery Safety Advisor Project.* 1995.

from a leak and can travel downwind for extensive distances, potentially creating hazardous conditions downwind of a leak. Dispersion analysis and concentration profiles are highly dependent on the leak conditions (size of leak, temperature and pressure of leak source) as well as atmospheric conditions (temperature, humidity, wind)[17] and are beyond the scope of this study.

- HF Alkylation Units are typically equipped with enhanced safety systems to quickly identify and respond to leaks of HF Acid.[19] The HF Alkylation units at both the ExxonMobil (Torrance) and Valero (Wilmington) refineries in the District have implemented most or all of these enhanced safety systems. These systems, as described in API Recommended Practice 751, include:
  - HF and/or hydrocarbon detection systems (which may be point source, open path, or infrared imaging design) to identify release of HF acid.
  - Remote camera systems for use in identifying potential leak locations from a safe distance.
  - Acid detecting paint to identify small HF leaks that may be undetectable by other means.
  - Water mitigation systems (remotely operating monitors and/or water curtains) to absorb any airborne HF and reduce downwind impact from a release. These systems have demonstrated HF removal efficiencies of 50-80+% in experimental testing (effectiveness will depend on leak rate/conditions and location and type of water mitigation system).[17, 19, 20]
  - Rapid acid transfer system to transport acid from a leaking section of the unit and isolate the acid in a safe location. Use of these systems help to minimize the duration of a leak and the total quantity of HF that is lost during a release event.
  - Remotely operated block valves to isolate the major sources of HF acid or other equipment that may present a credible leak potential.
- Modified HF acid has a greatly suppressed vapor pressure and aerosol forming tendency than standard hydrofluoric acid. Estimates of the reduction in airborne HF as a result of using the additive have ranged from 35 to 75%.[18, 19] The amount of reduction in airborne HF as a result of use of the MHF additive is dependent on a number of factors, including:
  - Release conditions - pressure, temperature, phase of material released (MHF or HC/MHF mix).
  - Concentration of additive in the inventory.
  - MHF, in combination with other mitigation measures, provides for higher mitigation overall.

  Based on an extensive literature review, the resulting vapor that forms when a mixture of HF plus additive is released to the atmosphere, as a function of the additive level, could not be found outside of the qualitative values listed previously. Discussions with the supplier of the technology, UOP, revealed this information is proprietary and not available in the published literature.
- There is also no study found in the literature for aerosol reduction with MHF and water mitigation system combined.
- Hydrofluoric Acid is a listed regulated substance under section 112(r) of the Federal CAA. Facilities that utilize HF above the threshold quantity of 1,000 lbs are required to have a Risk Management Plan (RMP). The light hydrocarbons in an alkylation unit are on the EPA list of flammable substances and need to be included in the RMP for the facility.[20]

---

[19] J.B. Cornwell, D.W. Johnson, *Effectiveness of Mitigation Systems in Reducing Hazards of Hydrogen Fluoride Leaks*, in *First Risk Control Engineering Seminar*. 1995.

[20] J.D. Cornwell, D.W. Johnson, J.D. Marx, *The Use of Comparative Quantitative Risk Analysis in Evaluating Proposed Hydrogen Fluoride Mitigation Systems*, in *1998 Process Plant Safety Symposium*. 1998.

- HF Acid is extremely corrosive, especially in solutions with water. HF Alkylation units are equipped with feed drier systems to ensure that water levels in the acid inventory are kept low to manage corrosion of the carbon steel components of the system. Areas of the unit that experience aggressive corrosion (such as the Acid Regen system) typically employ upgraded metallurgy (including use of Monel) to manage the risk from corrosion. Enhanced inspection (as described in API 751) is also utilized to ensure that corrosion is managed and addressed before resulting in a release.

3.6 Storage and Transportation

- Fresh acid tank: Fresh acid used in the process is stored in a specially designed storage tank. This tank is also used to store the acid during unit shutdowns.
- Fresh acid is typically transported to the refinery via truck. Due to the low acid consumption in an HF Alkylation unit, truck deliveries are fairly infrequent (1 to 2 times/month for an average sized 10 to 15 kBPD unit). Facilities that utilize the MHF additive receive acid that has been modified with additive at the HF manufacturing facility.
- Additive storage and import/export facilities are usually also included in MHF Alkylation units, so that additional additive can be imported if needed.

4. Sulfuric Acid Alkylation

4.1 Reaction Chemistry

The primary reaction in Sulfuric Acid Alkylation is the combination of an isoparaffin with an olefin to make a high-octane product in the presence of an acid catalyst,[8, 9]

$$C_4H_{10} \text{ (isobutane)} + C_4H_8 \text{ (butylene)} \xrightarrow{Acid} C_8H_{18} \text{ (2,2,4 trimethyl-pentane)} + \text{Heat}$$

There are also a series of side reactions involving olefin and acid that produce undesired, high molecular weight polymer species.[8, 9, 21] These polymer species reduce octane number and increase end point of the alkylate product. Co-processing of propylene and amylene feedstocks with butylene can result in hydrogen transfer reactions that create propane and isopentane while decreasing the yield of alkylate and increasing the consumption of isobutane. While the hydrogen transfer reactions are similar to those that occur in HF Alkylation, the magnitude is not as great for Sulfuric Acid units.

The most important variables that determine alkylate yield and selectivity include temperature, acid strength, olefin space velocity, and isobutane concentration.

While co-processing of propylene and amylene feed with butylene is possible in a sulfuric acid alkylation unit, the optimum reactor conditions for each of the feedstocks is different, and there are benefits in acid consumption and product quality (octane) if these feeds are processed in separate reactor systems. Equipment to separate the propylene, butylene, and amylene components upstream of the Alkylation Unit may need to be added if separate reactor processing of these components is desired (i.e. distillation towers and associated equipment).

4.2 Status of Development

Sulfuric Acid Alkylation is a well-established technology practiced worldwide for the manufacture of high octane alkylate for use in gasoline blending. Table 4 summarizes the current licensors of this technology in order of commercial units and installed base.

[21] K. Kranz, D.C. Graves, *Olefin Interactions in Sulfuric Acid Catalyzed Alkylation*, in *American Chemical Society 215th National Meeting*. 1998: Dallas, TX.

Table 4: Status of Sulfuric Acid Alkylation technology

Technology	Licensor	Description
Stratco	DuPont	Indirect effluent refrigeration in shell-and-tube style reactors. Over 90 units licensed worldwide with over 800,000 BPD installed capacity.
Kellogg	No longer offered	Multiple CSTR reactors in series, refrigerant mixed with feedstock and acid catalyst.
ExxonMobil [22]	ExxonMobil	Multiple CSTR reactors in series, refrigerant mixed with feedstock and acid catalyst. 16 units worldwide with over 230,000 BPD installed capacity.
CDAlky	CB&I	Vertical reactor that uses a proprietary static mixer. First commercialized in 2013, 3 units currently in operation, 2 due to startup in the next 12 months.

Conversion of a HF Alkylation unit to a Sulfuric Acid Alkylation unit must include a thorough review of the entire unit in order to determine if any equipment can be re-used. It is expected that the Fractionation section of the HF Alkylation Unit may be able to be re-used, but further evaluation, especially of metallurgy requirements between the two technologies would need to be conducted (i.e. Monel, which is used in HF units, is not acceptable in sulfuric acid service). A conversation with DuPont Stratco team,[23] along with an exhaustive review of the literature, suggested that there has never been a refinery in the US having gone through a conversion of an HF Alkylation unit to Sulfuric Acid Alkylation.

Although reactor systems for HF Alkylation and Sulfuric Acid Alkylation appear similar when flow diagrams are compared, an important difference between the two technologies is in the scale up of equipment depending on the capacity of the unit. While HF/MHF units can be scaled up by expanding the size of a single reactor system to handle increased capacity, for Sulfuric Acid Alkylation units additional reactor and settler vessels are required as unit size is scaled up. This results in additional equipment and plot space requirements for larger capacity Alkylation Units.

Operating costs for a Sulfuric Acid Alkylation unit are higher than for a similar HF/MHF Alkylation unit, due to the power costs associated with the refrigeration equipment and multiple pumps in the reactor system. Ongoing acid costs are also significantly higher due to the increased acid consumption in a Sulfuric Acid system.

[22] ExxonMobil. *Sulfuric Acid Alkylation.* Available from: http://corporate.exxonmobil.com/en/company/worldwide-operations/catalysts-and-licensing/fuel-products#/section/sulfuric-acid-alkylation.

[23] Conference call with DuPont Clean Technologies – Stratco Alkylation Technology on July 13, 2016.

4.3 Technology Summary

Table 5: Sulfuric Acid Alkylation technology summary

	Stratco [24]	**ExxonMobil** [8, 25]	**CDAlky** [7, 26]
Reactor configuration	Shell & tube heat exchanger with mixing impeller and circulation tube [27, 28]	Multiple CSTRs in-series	Vertical reactor with proprietary static mixer
Cooling method	Indirect Effluent Refrigeration Flash refrigerant at 5 psig and 35 °F in tube bundle; reactor emulsion in shell	Auto Refrigeration Refrigerant mixed with reactants, vaporizes out of reacting mixture	Refrigerant mixed in static mixer
Reaction temperature	40 to 50 °F	40 to 50 °F	< 32 °F
Reaction pressure	~ 60 psig	10 to 15 psig	*
Reaction phase	Acid-continuous emulsion	Acid-continuous emulsion	*
isobutane/olefin ratio	8:1 or greater	8:1 or greater	*
Acid/hydrocarbon ratio	50% / 50%	50% / 50%	*
Acid consumption rate	0.4 to 0.6 lb/gal alkylate	0.4 to 0.6 lb/gal alkylate	Reported as less than 50% of traditional process
Olefin space velocity	0.2 to 0.3 hr^{-1}	0.2 to 0.3 hr^{-1}	*
Alkylate yield	1.78 bbl/bbl olefin	1.78 bbl/bbl olefin	1.78 bbl/bbl olefin
Major equipment items needed to revamp existing HF Alkylation unit	- Reactor with tube bundle and mixer - Acid settler, pressure control valve - Suction trap flash drum - Effluent treatment section including caustic and water wash - Refrigeration section including compressor	- Reactor with impellers - Acid settler - Effluent treatment section including caustic and water wash - Refrigeration section including compressor	- Reactor (downflow) with proprietary internals - Acid-HC Coalescers - Refrigeration section including compressor
Contact information	Dupont Kevin Bockwinkel Office: 1-913-327-3536 kevin.b.bockwinkel@dupont.com	ExxonMobil Research & Engineering Christopher Dean Office: 1-832-625-6982	CB&I Arvids Judzis Director of Technology (Refining) Office: 1-832-513-1388 ajudzis@cbi.com

*Note: Information could not be found in the available literature or from the vendor on this technology.

[24] J. Branzaru, *Introduction to Sulfuric Acid Alkylation Unit Process Design*. 2001.
[25] S. Ackerman, P.W. Kamienski, K.D. Hart, D.R. Styles, *Sulfuric Acid Alkylation Reactor Upgrade* in *Digital Refining*. 2004.
[26] CB&I, *CDAlky Alkylation Technology*. 2014.
[27] K. Bockwinkel, *Stratco Alkylation Technology Improvements*, in *NPRA 2007 Annual Meeting*. 2007.
[28] DuPont, *Stratco Alkylation Innovations for Grassroots Applications*. 2015.

ED_002700_00008335-00017

4.4 Schematic Flow Diagram

4.4.1 Simple Flowsheet for Stratco Technology

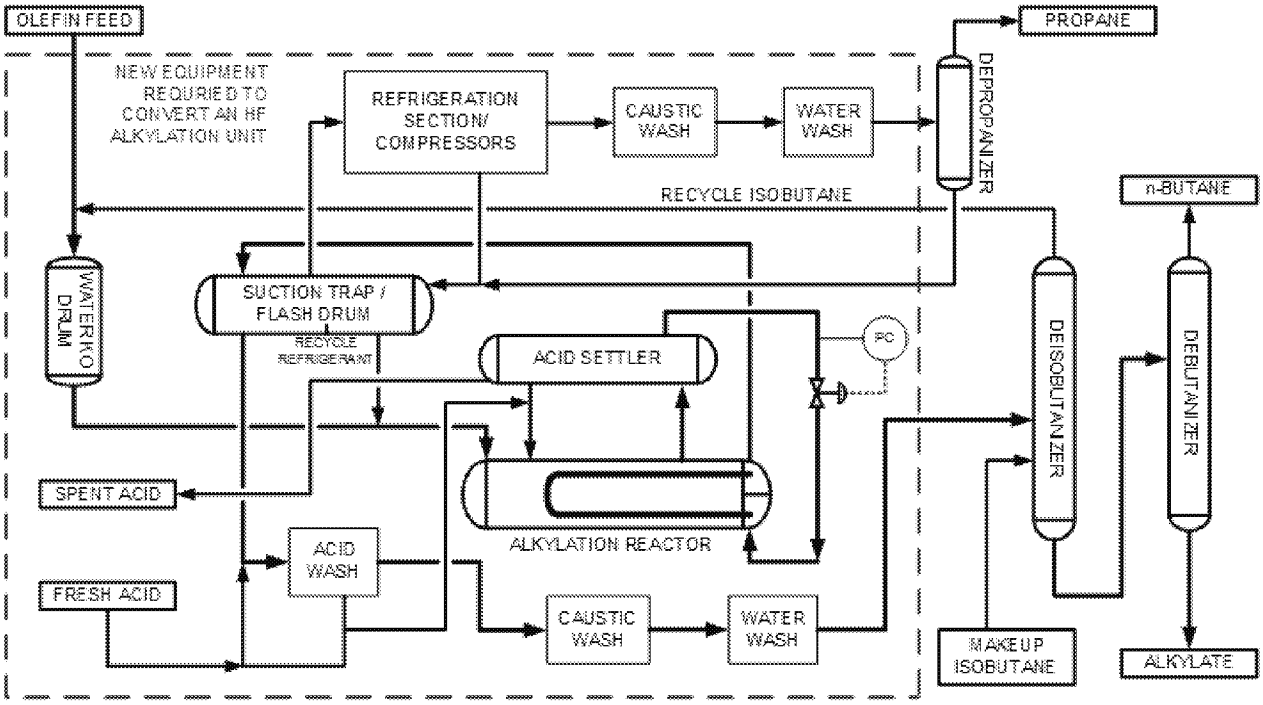

Figure 3: Simple flowsheet for Stratco Sulfuric Acid Alkylation technology

4.4.2 Simple Flowsheet for ExxonMobil Technology

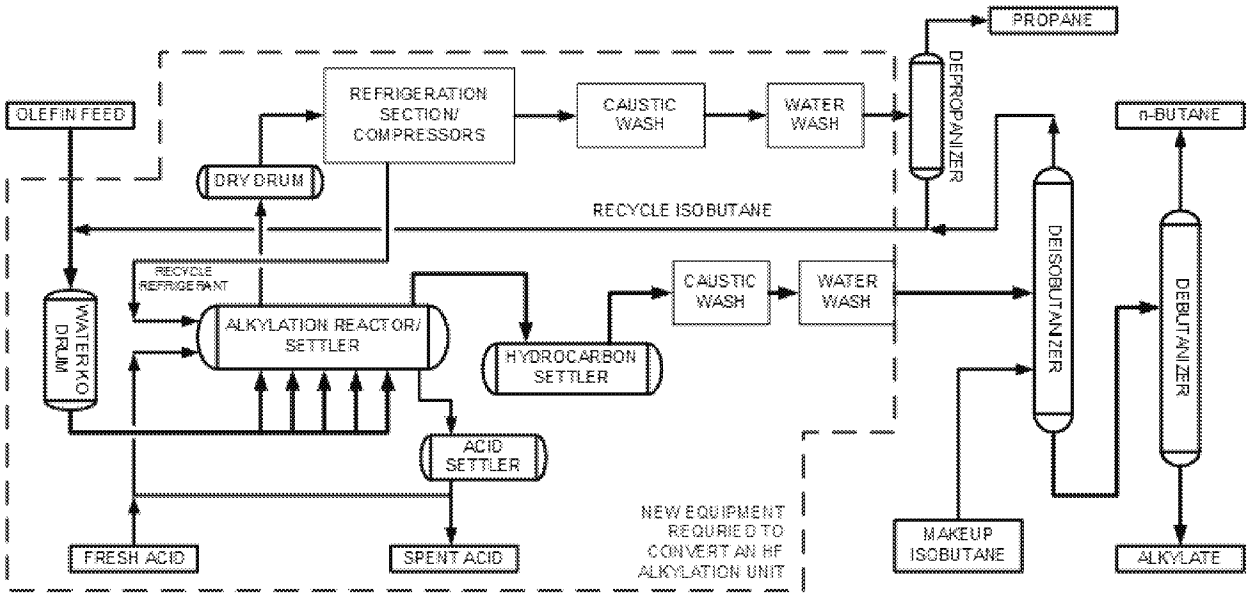

Figure 4: Simple flowsheet for ExxonMobil Sulfuric Acid Alkylation technology

4.4.3 Simple Flowsheet for CB&I CDAlky Technology

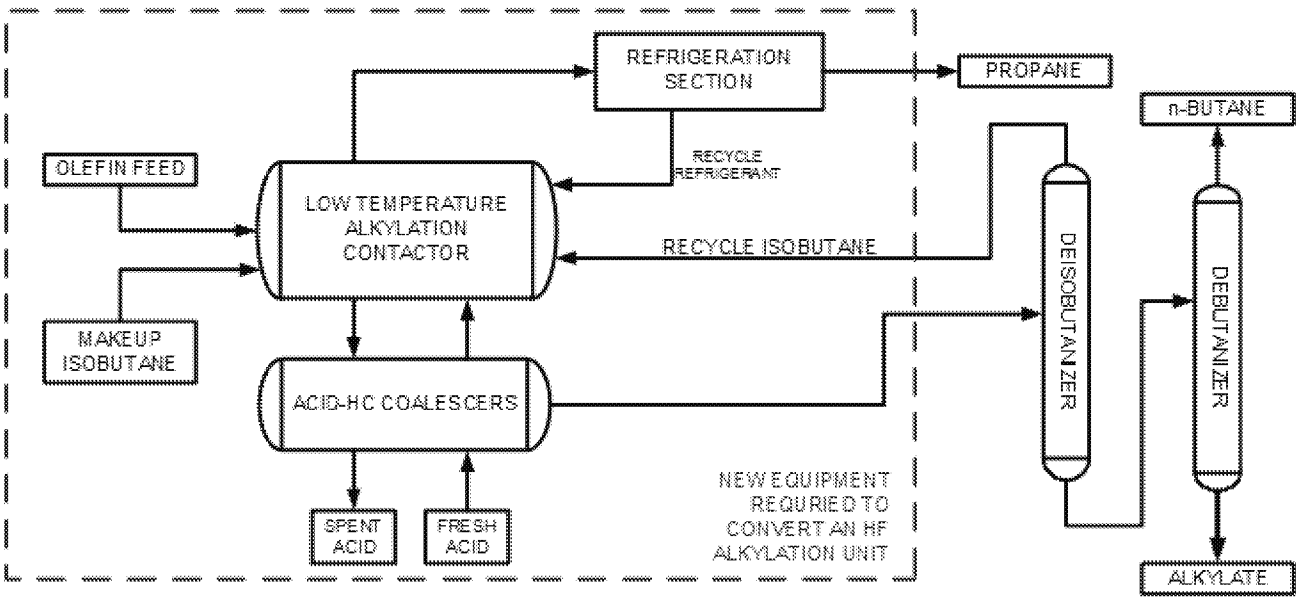

Figure 5: Simple flowsheet for CB&I Sulfuric Acid Alkylation technology

4.5 Hazards and Safety Issues Related to Sulfuric Acid

- Sulfuric Acid at concentrations above 85 wt% H_2SO_4 is a corrosive and hazardous material, and can cause serious burns to exposed tissue. The IDLH (immediately dangerous to life and health) limit for Sulfuric Acid from NIOSH is 3.75 ppm.[29]
- H_2SO_4 has higher boiling point (626°F) and lower volatility than HF and is less likely to form an aerosol at atmospheric conditions.[30] Tests on leaks of hydrocarbon/acid mixtures (as would be expected from an alkylation unit) showed that on average 97.6% of the leaking acid was recovered (i.e. would have fallen to the ground) – the remainder (2.4%) was believed to have been suspended on hydrocarbon "bubbles" and could travel and impact areas outside the alkylation unit.[31]
- The facility will require strict controls to contain an acid leak and must have in place the correct PPE and procedures to handle sulfuric acid to prevent chemical burns and corrosion. Typically Sulfuric Acid Alkylation units in the US do not include the same types of mitigation measures (detectors, rapid acid transfer, water mitigation systems) as HF Alkylation Units.[6, 15, 32]
- Although sulfuric acid is not on the EPA list of regulated substances requiring a risk management plan (RMP), it is listed on the CalARP list of regulated substance "if in a container with flammable

[29] EcoServices, *Sulfuric Acid 98% MSDS*. 2016.
[30] B. Scott, *Alkylation Process Hazards Management*. 1991.
[31] D.W. Johnson, *Sulfuric Acid Release Report*, in *1994 National Petroleum Refiners Association Annual Meeting*. 1994.
[32] Stratco, *H2SO4 vs HF*.

ED_002700_00008335-00020

hydrocarbons". Since the acid is contained in vessels that include alkylate, isobutane, and other light hydrocarbons, the sulfuric acid in alkylation units would need to be listed in a facilities RMP. The light hydrocarbons in an alkylation unit are on the EPA list of flammable substances and need to be included in the RMP for the facility.[31]

- With the need for multiple reactor vessels and associated equipment in a Sulfuric Acid Alkylation unit, VOC emissions from fugitive equipment (i.e. valves, pumps, etc.) are expected to be higher than from an HF Alkylation Unit.

4.6 Storage and Transportation

- Fresh acid tank: Fresh acid will need to be stored on-site in a new tank. This tank will need additional plot space with allowance for access by rail or truck depending on how the acid will be transported into the refinery. 100% containment walls will be required in the event of a leak or loss of containment.[6]
- Spent acid tank: Acid purged from the process contains a small amount of light hydrocarbon species that needs to be stored on-site for removal by rail or truck. These light hydrocarbon species can vaporize and form a flammable mixture in the vapor space above the liquid surface in the spent acid tank. Safety systems, such as CO_2 or N_2 inerting, should be in place. 100% containment walls will be required in the event of a leak or loss of containment.[6]
- There will be a significant increase in the number of trucks and/or railcars carrying fresh acid into and spent acid out of the refinery (spent acid is typically regenerated off-site). With the increased transportation there is increased potential for an accident leading to an off-site spill. For a nominal 25,000 BPD alkylation unit (alkylate capacity), estimated truck traffic is 10-15 trucks per day for fresh acid imports, and a slightly higher number for exports of spent acid (for a total of 20-30 trucks/day). Total truck traffic of 900-1300 trucks/month for Sulfuric Acid Alkylation compared to 2-4 trucks/month for HF Alkylation would need to be considered from a risk management perspective.

4.7 On-site Acid Regeneration

- On-site sulfuric acid regeneration is an alternative option for fresh acid supply. Several engineering firms offer Spent Sulfuric Acid Regeneration Technologies, including DuPont (MECS), which are used for on-site regeneration of sulfuric acid.[33]
- Regeneration of spent sulfuric acid includes steps to combust/decompose the spent acid (to remove hydrocarbon and acid soluble oil contaminants), recover waste heat, clean the combustion products to remove particulates, react the SO_2 formed during the decomposition to form SO_3, and to absorb the SO_3 and create fresh sulfuric acid.
- Acid regeneration facilities involve use of specialized equipment and materials that are required to avoid corrosion and to manage air emissions (including NOx, particulates, and SO_2).
- Air emissions from on-site regeneration would include SOx, NOx, and VOC emissions. While performing the regeneration off-site would reduce the local facility emissions, total "global" emissions would be similar and higher than those for a HF Alkylation system.

[33] L. Colby, J. Recar, *Spent Sulphuric Acid Regeneration (SAR) Process*, in *Digital Refining*. 2012.

- On-site sulfuric acid regeneration would reduce the transportation and associated hazards of sulfuric acid into and out of the plant, but increase the initial capital investment and operating/maintenance cost of the entire alkylation unit. A rough cost estimate of the on-site sulfuric acid regeneration facility is included in Section 12 of this report.
- Significant additional plot space will be required to install an on-site acid regeneration plant within the refinery.

4.8 Risk of Acid Release

There are a limited number of references in the published literature that examine the impact of an acid release from an alkylation unit beyond the battery limit of a refinery.

- Myers et al. [15] performed a quantitative risk analysis based on a 15,000 BPD capacity alkylation unit for both HF and Sulfuric Acid technologies. They concluded the risks are sensitive to various site-specific factors.
- Johnson [31] performed tests on leaks of hydrocarbon/sulfuric acid mixtures (as would be expected from an alkylation unit) and it was shown that, on average, 97.6% of the leaking acid was recovered.
- Based on the experience of DuPont Stratco technology,[23] there has never been any incident outside the fence line of refineries caused by acid leak of a Sulfuric Acid Alkylation facility.

Findings from the available literature are not conclusive in extrapolating results to a particular installation when trying to understand the impact of an acid leak beyond the battery limit of the facility. Qualitative statements presented earlier in this report referencing HF versus sulfuric acid aerosol formation and the approximate percentage of acid recovery in a leak is the extent of information publically available in the literature. Further details and conclusions on the dispersion characteristics of a HF versus sulfuric acid leak from a particular alkylation unit would require rigorous dispersion modeling based on prevailing atmospheric conditions for the location, the nature of the leak under consideration (i.e. process leak in the presence of hydrocarbon versus pure acid leak, transportation loss versus a loss inside the battery limit of the unit), arrangement of the acid storage tanks, mitigation systems in place, etc. Such modeling and analyses are outside the scope of this study.

5. Solid Acid Alkylation

5.1 Reaction Chemistry

In Solid Acid Alkylation, an acidic active site within the porous matrix of a catalyst fixed bed will promote the reaction between an isoparaffin and an olefin to yield a high-octane product,

$$C_4H_{10}\text{ (isobutane)} + C_4H_8\text{ (butylene)} \xrightarrow{Active\ Acid\ Site} C_8H_{18}\text{ (2,2,4 trimethyl-pentane)} + \text{Heat}$$

The catalyst matrix can also promote side reactions, just like the liquid acid process to produce undesired, high molecular weight polymer species. These polymer species reduce octane number and increase end point of the alkylate product.

The main difference between this technology and Sulfuric Acid Alkylation is the catalyst is made up of a fixed bed of porous pellets, typically a zeolite with an active species impregnated into the crystalline structure, to catalyze the alkylation reaction.

Information regarding the active catalyst species and exact formula is proprietary technical information and is not publically available. From what is available in an Albemarle patent description, the catalyst used in a Solid Acid Alkylation process consists of a zeolite-containing solid acid, a hydrogenation metal (usually a Group VIII noble metal such as platinum or palladium), and 1.5 to 6 wt.% water.[34] Catalysts containing these noble metals would be expected to be very expensive, and catalyst companies that provide this material may provide a lease arrangement for the catalyst to help in managing the costs associated with catalyst purchase. The catalyst vendor or licensor should provide catalyst cost, life, and disposal information during the licensing and procurement stage of a project.

No data on co-processing of propylene or amylene feedstocks with butylene feedstocks and potential yield or quality impacts has been published. While promotional information indicates a variety of olefin feedstocks can be processed, it is not known if there are operational or quality advantages to co-processing vs. processing in separate reactor systems.

[34] E.H. Van Broekhoven, J. Sant, S. Zuijdendorp, N. Winkler, *Alkylation Process Using a Catalyst Comprising a Solid Acid and a Hydrogenation Metal.* 2010, Albemarle Netherlands B.V., US Patent 7,750,197

5.2 Status of Development

Although several companies and research groups are actively pursuing Solid Acid Alkylation, only two licensors currently offer a commercial unit. Both of these licensors, summarized in Table 6, have aligned themselves with a catalyst manufacturing vendor to supply the fixed bed material for their respective technology. A third technology initially developed by UOP has not been developed beyond bench scale testing and was abandoned in 2005.

Table 6: Status of Solid Acid Alkylation technology

Technology	Licensor/Catalyst Vendor	Description
AlkyClean	CB&I / Albemarle	First unit started up at Wonfull Petrochemical in China in Dec. 2015 with 2,700 BPD alkylate capacity [3]
K-SAAT	KBR / Exelus	First project awarded to Haike Ruilin Chemical in China, in design phase. 3 additional licenses have been sold. Unit capacities were not disclosed in the technology announcements.
Alkylene	UOP	Laboratory and bench scale testing conducted in 1990s-2005. UOP ceased development of this technology after 2005. [4]

5.3 Technology Summary

Table 7: Solid Acid Alkylation technology summary

	AlkyClean [35, 36]	**K-SAAT** [37, 38]
Reactor configuration	Multiple vertical fixed bed reactors	Multistage fixed bed reactors
Catalyst	AlkyStar zeolite catalyst	ExSact zeolite catalyst
Reaction temperature	120 to 190 °F	140 to 160 °F
Reaction pressure	290 psig	(information not available)
Reaction phase	Liquid	Liquid
isobutane/olefin ratio	8-15:1	8-15:1
Catalyst regeneration	Hydrogen	Hydrogen
Cat regen temperature	250 °C	250 °C
Alkylate yield	1.7-1.8 bbl/bbl olefin	1.82 bbl/bbl olefin
Major equipment items needed to revamp existing HF Alkylation unit	- Pretreatment bed(s) necessary for impurity removal - Set of 3 vertical fixed bed reactors - Hydrogen supply and associated equipment (heat exchangers, valves)	- Pretreatment bed(s) necessary for impurity removal - Set of 2 multistage fixed bed reactors - Hydrogen supply and associated equipment (heat exchangers, valves)
Contact information	CB&I Arvids Judzis Director of Technology (Refining) Office: 1-832-513-1388 ajudzis@cbi.com	KBR Technology Gautham Krishnaiah Director, FCC Technology Office: 1-713-753-8528 Mobile: 1-443-794-9984 gautham.krishnaiah@kbr.com

[35] CB&I, *AlkyClean Solid Acid Catalyst Alkylation Technology*. 2014.

[36] Albemarle, *AlkyClean solid acid alkylation*. 2007.

[37] M. Mukherjee, J. Nehlsen, S. Sundaresan, G.D. Suciu, J. Dixon, *Scale-up strategy applied to solid-acid alkylation process*. Oil & Gas Journal, 2006. **10**(July): p. 48-54.

[38] KBR, *KBR Solid Acid Alkylation Technology (K-SAAT)*. 2015.

5.4 Schematic Flow Diagram

5.4.1 Simple Flowsheet for AlkyClean Technology

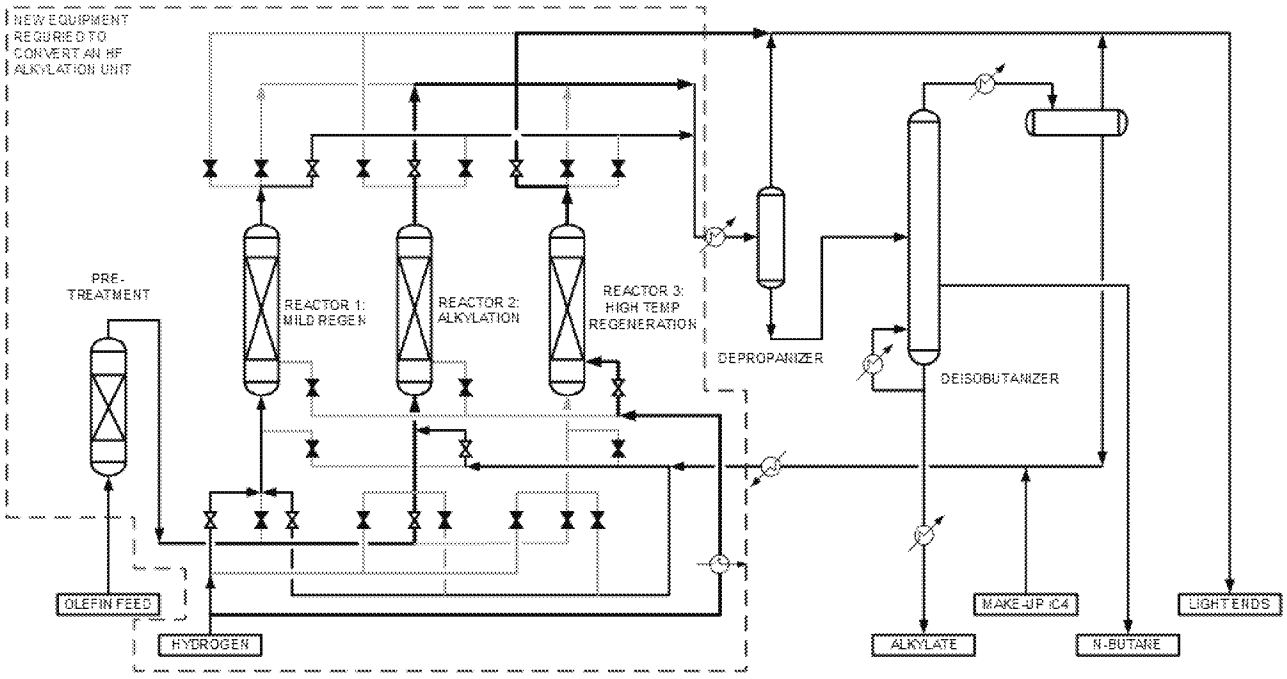

Figure 6: Simple flowsheet for AlkyClean Solid Acid Alkylation technology

5.4.2 Simple Flowsheet for K-SAAT Technology

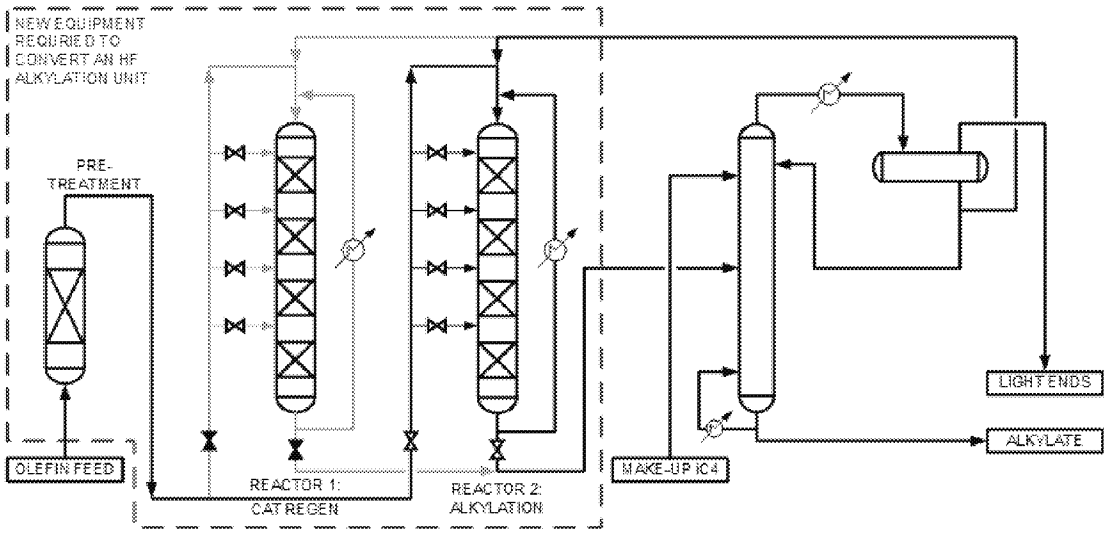

Figure 7: Simple flowsheet for K-SAAT Solid Acid Alkylation technology

5.5 Hazard and Safety Related to Solid Acid Catalyst

- There are no new hazard or safety issues that arise when introducing a zeolite-based catalyst into the alkylation unit. In the Solid Acid Alkylation process, the catalyst is a fixed bed and thus eliminates the hazards of acid handling, transportation, and storage. The solid catalyst is non-volatile and will not form a vapor or aerosol when exposed to the atmosphere.
- Standard safety precautions (dust control, basic PPE) should be used when handling the catalyst during loading and unloading operations.
- The solid acid catalyst is benign and not pyrophoric upon exposure to air.
- The light hydrocarbons in an alkylation unit are on the EPA list of flammable substances and need to be included in the RMP for the facility.
- A Material Safety Data Sheet (MSDS) is not available for the solid acid catalyst.

5.6 Storage and Transportation

- There will be no need to store or transport new materials into or out of the facility for a solid acid catalyst installation. No additional chemicals will be required and all of the catalyst inventory will be stored within the new reactor vessels.
- When the catalyst has served its useful life and needs to be replaced, it is returned to the catalyst manufacturer for precious metals reclamation and recycling. There will not be any local disposal of the material required.

ED_002700_00008335-00027

5.7 Catalyst Regeneration

The CB&I AlkyClean technology involves a two-step catalyst regeneration process. The first step, referred to as mild regeneration, occurs on a frequent basis (i.e. a few times a day) and switches reactor feedstock to isobutane with dissolved hydrogen without changing the operating conditions. The presence of hydrogen during mild regeneration partially cleans the catalyst to allow the reactor to return to alkylation mode in a short time interval. The second stage of regeneration, referred to as full regeneration, isolates the reactor from feedstock and introduces hydrogen vapor at 480 °F to restore catalyst activity to the "clean" condition. The full regeneration occurs once every one to two weeks. Both the regeneration steps are performed in-situ, avoiding the need to open or enter the reactors. Multiple reactors are installed, typically between 3 and 5, which operate in a cyclic batch-wise manner to maintain at least one reactor online processing feedstock while the other reactors undergo catalyst regeneration (either mild or full). Larger units may require additional reactor systems due to space velocity limits in the reactors.

The KBR K-SAAT technology differs from the CB&I AlkyClean technology in that a full regeneration step is performed after alkylation without having a mild regeneration. Based on this configurational difference, K-SAAT technology has two reactors, one in alkylation mode and the other in full regeneration mode.

6. Ionic Liquid Alkylation

6.1 Reaction Chemistry

The primary reaction that occurs in Ionic Liquid Alkylation is the combination of an isoparaffin with an olefin to make a high-octane product in the presence of an acid catalyst contained within the ionic liquid,

$$C_4H_{10}\text{ (isobutane)} + C_4H_8\text{ (butylene)} \xrightarrow{Ionic\ Liquid\ Catalyst} C_8H_{18}\text{ (2,2,4 trimethyl-pentane)} + \text{Heat}$$

There are also a series of side reactions involving olefin and acid that produce undesired, high molecular weight polymer species. These polymer species reduce octane number and end point of the alkylate product.

The Ionic Liquid (IL) Alkylation process uses a composite-IL as a homogeneous catalyst for alkylation reactions at ambient temperatures and moderate pressures.[39] The catalyst is an ionic, salt-like material that is a liquid at temperatures below 100℃. Acidic chloro-aluminate has been used as a homogeneous catalyst for isobutane alkylation, but has a low alkylate yield. Composite-IL catalysts that synthesize a conventional-IL catalyst and CuCl have shown higher alkylate yields and selectivity.[40]

6.2 Status of Development

Although an industrial scale test was conducted in China in 2006, the test run was limited to 5 days and no additional industrial testing has been reported, indicating problems with the initial run. The latest set of data suggests process optimization to improve the commercial performance of Ionic Liquid Alkylation is still underway. Similarly, Chevron has indicated that they are currently testing new technologies to determine their viability.[41] UOP indicated they have developed an alternative Ionic Liquid Alkylation technology and are actively seeking the first customer to install one of these units. No additional information is available at this time on UOP's Ionic Liquid Alkylation technology.[42]

Therefore, industry research concludes that the commercialization of this alkylation technology requires additional optimization prior to use at this time. Currently, no actual commercial operation is reported worldwide. Feedback from one of the vendors also indicated that the technology is currently still under testing to determine its viability. Therefore, information is not available for commercial scale equipment to be sized and cost estimate to be generated. Based on the above information, NEC concludes that Ionic Liquid Alkylation is a technology that is not readily viable for revamping an existing modified HF Alkylation unit at this stage of development. Therefore, this technology is not considered commercially viable for replacing existing HF Alkylation units in the District. Information that is publicly available is summarized in Table 8.

[39] Z. Liu, R. Zhang, C. Xu, R. Xia, *Ionic Liquid Alkylation Process Produces High-quality Gasoline.* Oil & Gas Journal, 2006.

[40] R. Skoda-Foldes, *The Use of Supported Acidic Ionic Liquids in Organic Synthesis.* Molecules, 2014. **19**: p. 8840-8884.

[41] Email correspondence with Chevron on April 7, 2016.

[42] Email correspondence with UOP on September 8, 2016.

Table 8: Status of Ionic Liquid Alkylation technology

Technology	Licensor/Catalyst Vendor	Description
–	CUP & PetroChina	Pilot plant & 5-day industrial scale test, China, 2006 [39, 43]
–	Chevron *	Patent applications filed in the US in 2011 [44, 45]
–	UOP	Details are not yet available on this alternative Ionic Liquid Alkylation technology [42]

* Note: The Chevron patents do not contain specific process conditions.

6.3 Technology Summary

Table 9: Ionic Liquid Alkylation technology summary

	CUP/PetroChina
Reactor configuration	Static Mixer & Settler upstream of fractionation column
Catalyst	Composite-IL Catalyst
Reaction temperature	15°C
Reaction pressure	~ 58 psig
Reaction phase	Liquid
isobutane/olefin ratio	~8:1 to 500:1
Catalyst regeneration	Unknown
Cat regen temperature	Unknown
Major equipment items needed to revamp existing HF Alkylation unit	- Static mixer(s) and settling tanks - Surge tank for composite-IL catalyst

[43] C. Xu, *Study on isobutane alkylation catalyzed by ionic liquids.*

[44] H. Luo, M. Ahmed, *Ionic Acid Catalyzed Alkylation Processes & Systems.* 2013, Chevron U.S.A. Inc., US Patent Application 2013/0066130 A1

[45] R.F. Cleverdon, C.M. Phillips, H.K.C. Timken, *Conversion of HF Alkylation Units for Ionic Liquid Catalyzed Alkylation Processes.* 2013, Chevron U.S.A. Inc., US Patent Application US2013/0066133 A1

6.4 Schematic Flow Diagram

6.4.1 Simple Flowsheet for CUP / PetroChina Pilot Plant

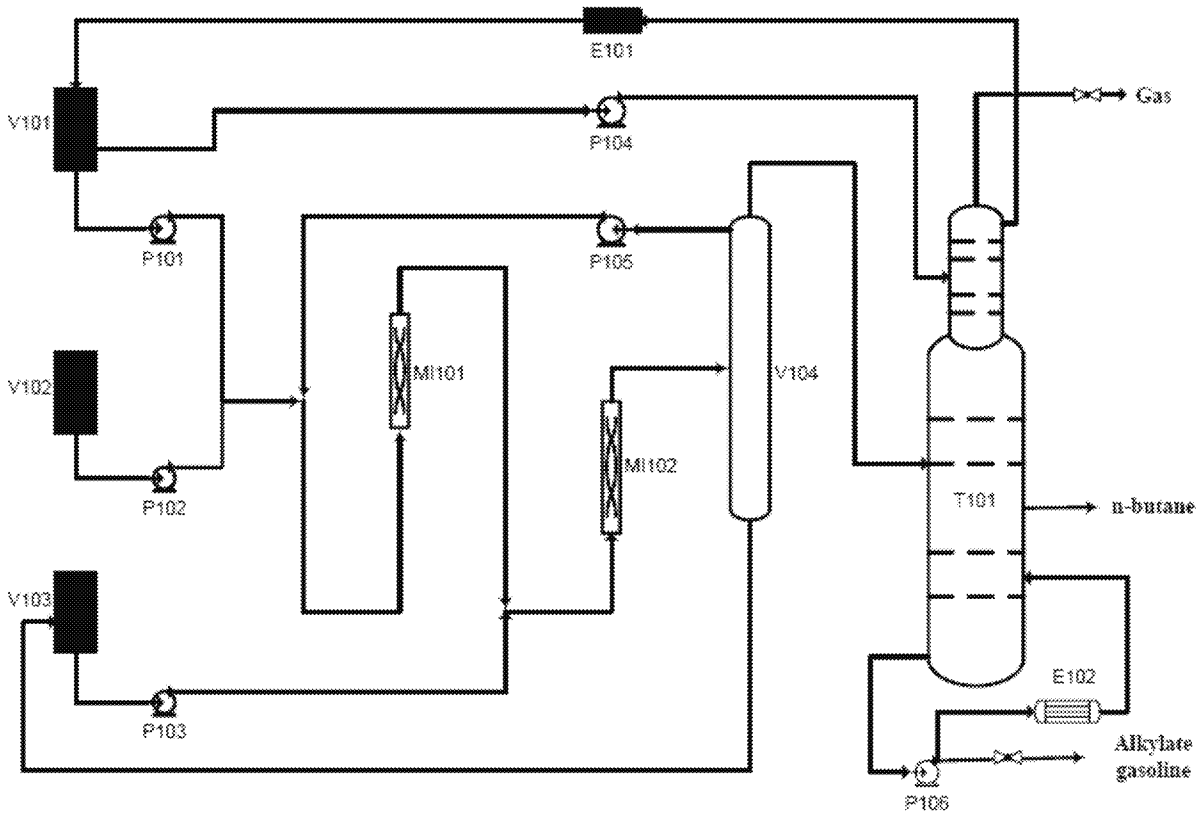

Figure 8: Simple flowsheet for CUP/PetroChina Ionic Liquid Alkylation technology pilot facility

6.4.2 Simple Flowsheet for the PetroChina Industrial Retrofit of H_2SO_4 Alkylation Unit

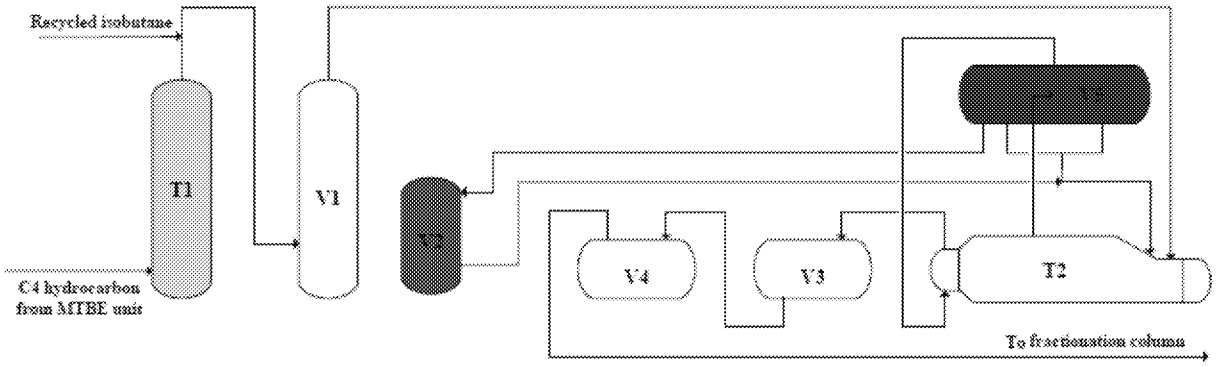

Figure 9: Simple flowsheet for PetroChina industrial retrofit of Sulfuric Acid Alkylation unit

Where:

- T1 – Selective Hydrogenation Unit
- T2 – Stratco Reactor
- V1 – Adsorber
- V2 – Surge tank for composite-IL catalyst
- V3 – Knockout drum for isobutane / alkylate
- V4 – Alkaline wash tank
- V5 – Settling vessel

6.4.3 Simple Flowsheet for Chevron Patented Process

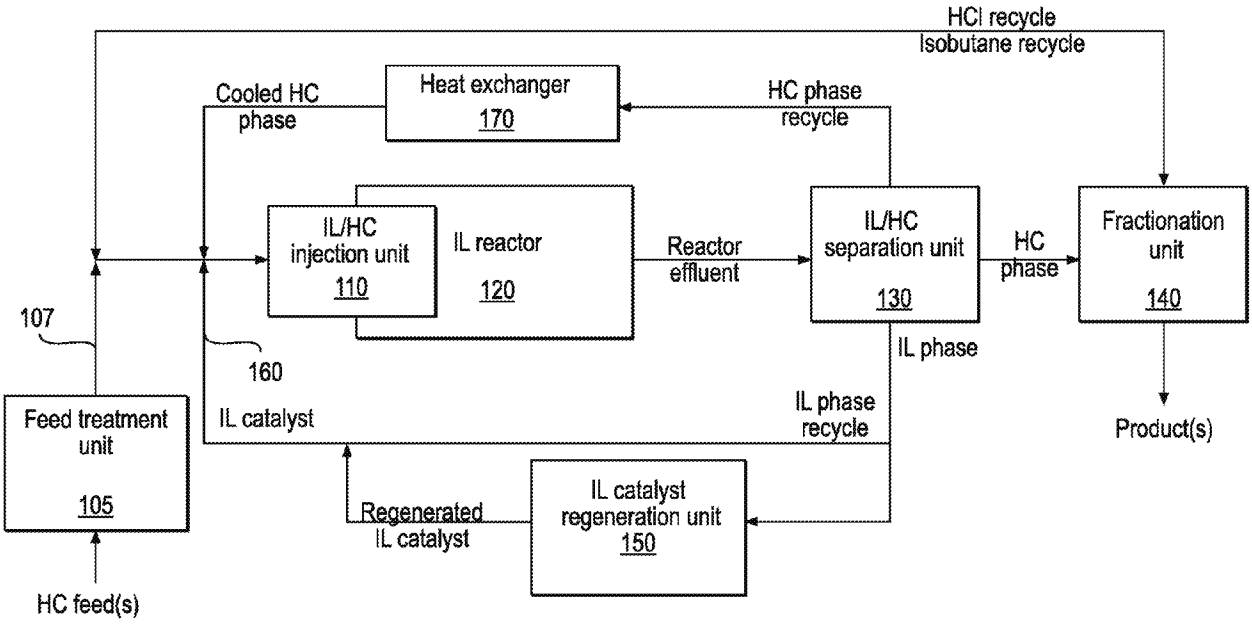

Figure 10: Simple flowsheet for Chevron patented Ionic Liquid Alkylation process

6.5 Hazard and Safety Related to Ionic Liquid Catalyst

- There are no new hazard/safety issues that arise when introducing an ionic liquid (IL) catalyst into the alkylation unit. Ionic liquids have historically been used as homogenous catalysts due to their good solubility in a wide range of compounds, negligible vapor pressure and ability to be recycled for use. The Ionic Liquid Alkylation process eliminates the hazards of acid handling, transportation, and storage.
- The IL catalyst is reported by CUP/PetroChina as noncorrosive, so carbon steel can be used for the material of construction. Chevron patents indicate that an upgrade to enhanced metallurgy (Ni/Cr steel) may be desired for systems that are in contact with the IL catalyst.
- The IL catalyst is benign and not pyrophoric upon exposure to air.
- The IL catalyst is "moisture sensitive" and may become more corrosive or unstable if exposed to water. An HF unit converted to IL catalyst would keep the existing feed driers to ensure that water is not introduced into the unit.
- A Material Safety Data Sheet (MSDS) is not available for the ionic liquid catalyst.

6.6 Storage and Transportation

- While the Chevron unit indicates IL catalyst regeneration is performed on-site, the CUP/PetroChina process does not specifically identify whether on-site regeneration or transportation of fresh/spent IL catalyst is required. With no commercial reference unit running, it is unclear at this stage what impact, if any, there will be on storage and transportation in the refinery.

7. Solid Onium Poly Alkylation (Alkad Process)

7.1 Reaction Chemistry

Solid Onium Poly Alkylation, which goes under the trade name "Alkad",[46, 47] was developed by UOP/Chevron Texaco as a competing technology to the ReVAP process of Phillips/ExxonMobil. While the ReVAP process adds a proprietary additive to HF in order to reduce vapor pressure upon a release to the atmosphere, the Alkad process adds an amine/nitrogen-containing polymer to achieve the same objective. A Material Safety Data Sheet (MSDS) is not available for the amine/nitrogen containing polymer added to the process.

Therefore, Solid Onium Poly Alkylation is equivalent to a modified HF unit [48] and the associated chemistry, flow sheet, and safety concerns surrounding a modified HF unit will also apply to the Alkad process.

7.2 Status of Development

The Alkad process was first used in 1992 at Texaco's El Dorado Refinery in KS. Since this first unit started up, there is no reference of any additional unit being installed or operated since. The Alkad process is no longer in operation. Therefore, this technology is not considered commercially viable for replacing existing HF Alkylation units in the District.

[46] ICIS. *Texaco/UOP reduce HF acid hazards*. 1994; Available from: http://www.icis.com/resources/news/1994/10/31/27998/texaco-uop-reduce-hf-acid-hazards/.

[47] A.E. Comyns, *Alkad*, in *Encyclopedic Dictionary of Named Processes in Chemical Technology*. 1993. p. 11.

[48] G.A. Olah et.al., *Ionic Liquid and Solid HF Equivalent Amine-Poly(Hydrogen Fluoride) Complexes Effecting Efficient Environmentally Friendly Isobutane-Isobutylene Alkylation*. Journal of American Chemistry Society, 2005. **27**: p. 5964-5969.

8. Fixed Bed Alkylation

8.1 Reaction Chemistry

From the limited amount of literature available on this technology, the prevailing mechanism is a two-step reaction process.[49] The first step involves a fast reaction between olefin and acid to form an ester.

$$R\text{ (olefin)} + \text{H-X (acid)} \overset{Acid}{\longleftrightarrow} R\text{-X (ester)}$$

The ester species, *R*-X, then reacts with the isoparaffin to make the high-octane product,

$$R\text{-X (ester)} + C_4H_{10}\text{ (isobutane)} \overset{Acid}{\longrightarrow} \text{alkylate} + \text{H-X (acid)}$$

Although the overall reaction is identical to a traditional alkylation unit, the key concept is the liquid acid is contained within a solid matrix in the reactor. As feed passes through the bed, the ester is formed and acid is displaced from the solid. Once the ester reacts with the isoparaffin to make alkylate, the recovered acid species is deposited back onto the solid. In essence, a reacting band of acid moves through the solid matrix until the feed has displaced the acid and pushed this through to the reactor outlet. Once the acid has been displaced from the solid, the matrix needs to be regenerated. A Material Safety Data Sheet (MSDS) is not available for the solid matrix material that makes up the fixed bed catalyst.

The details around regeneration are not well defined, and the literature talks about removing the material from the reactor and performing a stripping step that operates at near-atmospheric pressure using a hydrocarbon stripping agent.

8.2 Status of Development

Haldor-Topsøe have a strong presence in the literature related to this technology. The literature describes scale up of a pilot plant to 10 BPD but nothing beyond this. Discussions with Haldor Topsøe indicated this technology has now been abandoned.[50] To date, no other licensor is pursuing this technology. Table 10 summarizes the current status of Fixed Bed Alkylation that is available in the published literature.

Table 10: Status of Fixed Bed Alkylation technology

Technology	Licensor	Description
–	Haldor Topsøe	Abandoned, no longer offered as a commercial technology [50]

This technology is not considered commercially viable for replacing existing HF Alkylation units in the District.

[49] S.I. Hommeltoft, *Fixed-Bed Alkylation Using SLP-Type Catalyst in a Chromatographic-Type Reactor Concept.* Industrial & Engineering Chemistry Research, 2003. **42**: p. 5526-5534.

[50] Email correspondence with Haldor Topsøe on April 7, 2016.

9. Slurry Catalyst Alkylation

9.1 Reaction Chemistry

While details related to the catalyst are limited in the literature, the basic reaction chemistry involves the combination of an isoparaffin with an olefin in the presence of a catalyst to yield a high-octane product,

$$C_4H_{10}\text{ (isobutane)} + C_4H_8\text{ (butylene)} \xrightarrow{Catalyst} C_8H_{18}\text{ (2,2,4 trimethyl-pentane)} + \text{Heat}$$

Literature references identify the hydrocarbon feed being mixed with a finely distributed solid material between 20 and 200 micron in size, identified as a catalyst, before entering the reactor. The reactor is described as a 30 tray, two-pass distillation tower with feed entering at each stage in the tower, and a combined tower effluent from the bottom tray that contains excess isobutane, alkylate, and catalyst.

Reference to a Y-type zeolite is made in the literature, while reference to "other" catalysts that are not described indicate higher alkylate yields. A Material Safety Data Sheet (MSDS) is not available for the slurry catalyst.

9.2 Status of Development

UOP filed for a patent in 2012 describing the general concept for a Slurry Catalyst Alkylation process.[51] No other references or examples could be found in the literature related to this technology. Table 11 summarizes the current status of Slurry Catalyst Alkylation that is available in the published literature.

Table 11: Status of Slurry Catalyst Alkylation technology

Technology	Licensor	Description
–	UOP	US patent filing 2012/0230882 A1 published in 2012. No reference to an installed plant or a pilot test unit available

This technology is not considered commercially viable for replacing existing HF Alkylation units in the District.

[51] D.A. Nafis, L. Davydov, D.N Myers, C.J. Stevens, *Slurry Column Gasoline Alkylation Using Gas Phase Olefin Injection*. 2012, UOP LLC., US Patent Application US 2012/0230882 A1

10. Soluble Catalyst Alkylation

There was no definitive literature references or documentation that could be found relating to Soluble Catalyst Alkylation. Using various literature search engines relating to scholarly publications, patent filings, and company websites, no reference could be found that identified a Soluble Catalyst Alkylation process.

Based on this preliminary assessment, it was assumed that Soluble Catalyst Alkylation is a technology that is not in the pilot plant testing phase nor is commercially available. Therefore, this technology is not commercially viable for replacing existing HF Alkylation units in the District.

ED_002700_00008335-00037

11. Conclusion and Recommendation

Sulfuric Acid and Solid Acid are two alkylation technologies that have shown enough commercial development to support the conversion of an existing HF Alkylation Unit.

Solid Acid Alkylation technology is still in the early phases of commercial implementation with less than one year of runtime achieved on a single operating plant in China (other units are currently in design). The existing unit in operation is of much smaller capacity than the current MHF units in the Los Angeles area.

Sulfuric Acid Alkylation is a well-established technology with many years of operating experience and established technology providers. Based on an extensive literature review and discussions with technology providers, there is no known reference for an HF or MHF Alkylation unit that has been converted to Sulfuric Acid Alkylation.

The conversion of a HF or MHF to Sulfuric Acid or Solid Acid Alkylation unit will be an expensive undertaking, with an order-of-magnitude estimate for total installed cost putting this in the $100 million range for a 25,000 BPD plant.

ED_002700_00008335-00038

12. Cost Estimate

Only two of the technologies reviewed in this report have at least one commercial plant in operation, Sulfuric Acid Alkylation and Solid Acid Alkylation. Cost estimates for these two technologies have been generated, with separate estimates for the two leading vendors for each technology. To generate a ± 50% estimate, a 25,000 BPD alkylation unit capacity has been assumed for equipment sizing.

The standard labor productivity rate for California of $85 per hour has been applied, which does not include any adjustments based on complexity of the work or other modifying factors. Indirect costs are based on multipliers applicable to construction within an existing refinery in the US. Freight and taxes assumes transportation of equipment to California. Temporary construction includes labor for non-construction work including erecting scaffold, maintaining equipment in the warehouse and laydown yard, fire watch activities etc. Construction equipment is related to heavy lifts that will typically require a crane to move equipment into place. Construction supervision includes the cost required to hire staff to supervise the labor force during the construction effort.

An allowance for piping costs required to interconnect each equipment item within the battery limit of the alkylation unit is included in the material cost for each piece of equipment. The labor for each equipment item also includes an allowance for installing this piping. Some components within the alkylation unit require high alloy based on the fluid being processed, this has been factored into the equipment and piping cost.

A preliminary cost estimate on the basis of 25,000 BPD alkylate production has been completed and included in Appendix 1.

In addition, based on a conversation with DuPont's Stratco personnel,[23] the approximate cost for a new Stratco Sulfuric Acid Alkylation unit to produce 25,000 BPD alkylate that excludes a new fractionation section is approximately $120 million USD.

The cost estimate includes Total Installed Cost (TIC) for the equipment only, this estimate does not include operating costs associated with fresh acid delivery/spent acid removal, nor does this estimate include pricing for the solid acid catalyst. Discussions between NEC and the technology provider for Solid Acid Alkylation identified pricing is determined on a case-by-case basis with options to lease or purchase the catalyst available. Price estimates for the solid acid catalyst will only be provided with appropriate NDA's in place between the technology provider and the end client, and the request for a price quote must relate to an existing or future application. Although the cost of the catalyst is unknown at this time, the total installed cost (including catalyst) for a Solid Acid Alkylation unit is expected to be similar to the cost for a Sulfuric Acid Alkylation unit, which would indicate that the catalyst cost is a significant portion of the unit total installed cost.

An order of magnitude (±40%) TIC estimate for the spent sulfuric acid plant installation was provided by the provider MECS, a DuPont subsidiary, based on 2010 U.S. Gulf Coast prices. The costs below are for ISBL only and exclude any infrastructure or utility upgrades required.

- The Order of Magnitude cost estimate for a 250 STPD Sulfuric Acid Regeneration Plant (required capacity for a 25,000 BPD Alky Unit) is $45 million USD.
- The Order of Magnitude cost estimate for a 100 STPD Sulfuric Acid Regeneration Plant (required capacity for a 10,000 BPD Alky Unit) is $35 million USD.

ED_002700_00008335-00039

NORTON engineering	APPENDIX 1			
	Document No:	15-5087-CE-01	Rev.	4
	NEC Project No.:	AQMD-15-5087		
	Date:	9/9/2016	Client Project No:	

Client:	South Coast Air Quality Management District (SCAQMD)
Project:	Alkylation Technology Study
Title:	25,000 BPD Alkylation Unit Cost Estimate

STRATCO 25k BPD

Cost Summary

	Labor Wh	Material	Labor	Total		
Direct Costs						
Compressor	19,800	7,831,100	1,683,000	9,514,100		
Heat Exchangers	39,500	5,669,700	3,357,500	9,027,200		
Vertical Vessels	13,800	1,499,300	1,173,000	2,672,300		
Horizontal Vessels	77,600	5,621,200	6,596,000	12,217,200		
Reactors	21,200	5,399,600	1,802,000	7,201,600		
Pumps	19,300	1,734,600	1,640,500	3,375,100		
Common Facilities	11,100	302,700	943,500	1,246,200		
Removals/Demo	50,575	-	4,298,875	4,298,875		
ST Directs	252,875	28,058,200	21,494,375	49,552,575		
Indirect Costs						
Freight & taxes		1,402,900		1,402,900	5%	
Temp Construction	25,290		1,643,700	1,643,700	10%	$65
Construction Equip		429,900		429,900	2%	direct lbr
Construction Supervision			1,074,700	1,074,700	5%	direct lbr
ST Indirects	25,290	1,832,800	2,718,400	4,551,200		
Total Construction	278,165	29,891,000	24,212,775	54,103,775	417,248	wh w/ cont
Detailed Engineering				10,820,800	20%	total const
Construction Management				2,705,200	5%	total const
ST Engineering & CM				13,526,000		
Escalation	0%			-		
Total Prime Contract				67,629,775		
Contingency	50%			33,814,900		
Technology Dev Contingency						
Total Prime w/ Contingency				101,444,675		
Owner's Costs	10%			10,144,468		
Catalyst				-		
Total Project Costs				111,589,143	2.25	
Call			$k	111,590		

ExxonMobil 25k BPD

Cost Summary

	Labor Wh	Material	Labor	Total		
Direct Costs						
Compressor	19,800	7,831,100	1,683,000	9,514,100		
Heat Exchangers	17,200	2,076,200	1,462,000	3,538,200		
Vertical Vessels	31,000	1,999,000	2,635,000	4,634,000		
Horizontal Vessels	54,800	4,025,800	4,658,000	8,683,800		
Reactors	51,800	5,571,200	4,403,000	9,974,200		
Pumps	19,300	1,734,600	1,640,500	3,375,100		
Common Facilities	12,600	499,700	1,071,000	1,570,700		
Removals/Demo	51,625	-	4,388,125	4,388,125		
ST Directs	258,125	23,737,600	21,940,625	45,678,225		
Indirect Costs						
Freight & taxes		1,186,900		1,186,900	5%	
Temp Construction	25,810		1,677,800	1,677,800	10%	$65
Construction Equip		438,800		438,800	2%	direct lbr
Construction Supervision			1,097,000	1,097,000	5%	direct lbr
ST Indirects	25,810	1,625,700	2,774,800	4,400,500		
Total Construction	283,935	25,363,300	24,715,425	50,078,725	425,903	wh w/ cont
Detailed Engineering				10,015,700	20%	total const
Construction Management				2,503,900	5%	total const
ST Engineering & CM				12,519,600		
Escalation	0%			-		
Total Prime Contract				62,598,325		
Contingency	50%			31,299,200		
Total Prime w/ Contingency				93,897,525		
Owner's Costs	10%			9,389,753		
Catalyst				-		
Total Project Costs				103,287,278	2.26	
Call			$k	103,290		

NORTON engineering	APPENDIX 1			
	Document No:	15-5087-CE-01	Rev.	4
	NEC Project No.:	AQMD-15-5087		
	Date:	9/9/2016	Client Project No:	

Client:	South Coast Air Quality Management District (SCAQMD)
Project:	Alkylation Technology Study
Title:	25,000 BPD Alkylation Unit Cost Estimate

Solid Acid CBI 25k BPD

Cost Summary

	Labor Wh	Material	Labor	Total		
Direct Costs						
Reactors	38,000	2,874,500	3,230,000	6,104,500		
Heater	3,400	199,900	289,000	488,900		
Vertical Vessel	5,200	496,100	442,000	938,100		
Pumps	8,800	1,029,500	748,000	1,777,500		
Common Facilities	3,700	128,300	314,500	442,800		
Removals/Demo	14,775	-	1,255,875	1,255,875		
ST Directs	73,875	4,728,300	6,279,375	11,007,675		
Indirect Costs						
Freight & taxes		236,400		236,400	5%	
Temp Construction	7,390		480,200	480,200	10%	$65
Construction Equip		125,600		125,600	2%	direct lbr
Construction Supervision			314,000	314,000	5%	direct lbr
ST Indirects	7,390	362,000	794,200	1,156,200		
Total Construction	81,265	5,090,300	7,073,575	12,163,875	121,898	wh w/ cont
Detailed Engineering				2,432,800	20%	total const
Construction Management				608,200	5%	total const
ST Engineering & CM				3,041,000		
Escalation	0%			-		
Total Prime Contract				15,204,875		
Contingency	50%			7,602,400		
Total Prime w/ Contingency				22,807,275		
Owner's Costs	10%			2,280,728		
Catalyst					*	
Total Project Costs				25,088,003	2.28	
Call			$k	25,090		

Solid Acid KBR 25k BPD

Cost Summary

	Labor Wh	Material	Labor	Total		
Direct Costs						
Reactors	26,400	2,215,200	2,244,000	4,459,200		
Heater	3,400	199,900	289,000	488,900		
Vertical Vessel	5,200	496,100	442,000	938,100		
Pumps	8,800	1,029,500	748,000	1,777,500		
Common Facilities	3,000	102,000	255,000	357,000		
Removals/Demo	11,700	-	994,500	994,500		
ST Directs	58,500	4,042,700	4,972,500	9,015,200		
Indirect Costs						
Freight & taxes		202,100		202,100	5%	
Temp Construction	5,850		380,300	380,300	10%	$65
Construction Equip		99,500		99,500	2%	direct lbr
Construction Supervision			248,600	248,600	5%	direct lbr
ST Indirects	5,850	301,600	628,900	930,500		
Total Construction	64,350	4,344,300	5,601,400	9,945,700	96,525	wh w/ cont
Detailed Engineering				1,989,100	20%	total const
Construction Management				497,300	5%	total const
ST Engineering & CM				2,486,400		
Escalation	0%			-		
Total Prime Contract				12,432,100		
Contingency	50%			6,216,100		
Technology Dev Contingency	20%			2,486,400		
Total Prime w/ Contingency				21,134,600		
Owner's Costs	10%			2,113,460		
Catalyst					*	
Total Project Costs				23,248,060	2.58	
Call			$k	23,250		

* NOTE: Catalyst costs are not included in this estimate, but expected to be a significant portion of the total installed cost of a Solid Acid Alkylation Unit. Lease options may be available to help reduce capital costs, but would obviously increase Operating expenditures.