Hydrogen Fluoride Study

Final Report

Report to Congress

Section 112(n)(6) Clean Air Act As Amended

TABLE OF CONTENTS

		Page
	Acronyms	ix
	Executive Summary	xiii
1.	INTRODUCTION	1
1.1	Background	1
1.2	Purpose	2
1.3	Approach	3
1.4	Organization of the Report	4
2.	PROPERTIES AND HAZARDS OF HYDROGEN FLUORIDE	7
2.1	Description of Physical and Chemical Properties	7
2.2	Health Hazards	8
2.3	Environmental Hazards	12
2.4	Release Characteristics	12
3.	CHARACTERIZATION OF HYDROGEN FLUORIDE INDUSTRY	19
3.1	Production of Hydrogen Fluoride	19
3.2	Uses of Hydrogen Fluoride	21
3.3	Market Outlook	25
4.	REGULATIONS AND INITIATIVES	31
4.1	U.S. Federal Regulation of Hydrogen Fluoride	31
4.2	U.S. State and Local Regulations	36
4.3	International Efforts	42
5.	HYDROGEN FLUORIDE INDUSTRY PROCESS DESCRIPTIONS	53
5.1	HF Manufacture	53
5.2	Transportation and Storage	56
5.3	Fluorocarbon Production	57
5.4	Alkylate Production for Gasoline	61
5.5	Uranium Processing	67
5.6	Aluminum Fluoride and Aluminum Manufacturing	67
5.7	Electronics Manufacturing	68
5.8	Chemical Derivatives Manufacturing	68
5.9	Processes Using Aqueous Hydrogen Fluoride	69

ED_002700_00005500-00002

TABLE OF CONTENTS (CONTINUED)

Page

5.10 Dissolving Ores for Production of Tantalum and Columbium Metals 70
5.11 Linear Alkylbenzene Production 71
5.12 Pharmaceutical Production 71

6. HAZARDS OF HYDROGEN FLUORIDE PROCESSES AND INDUSTRY PRACTICES TO PREVENT RELEASES 77

6.1 General Hazards 77
6.2 General Industry Practices 78
6.3 Specific Industry Hazards and Practices 85
6.4 Research Efforts to Modify or Substitute Hydrogen Fluoride in Alkylation 95

7. INDUSTRY PRACTICES TO DETECT AND MITIGATE HYDROGEN FLUORIDE RELEASES 101

7.1 General Industry Practices to Detect Hydrogen Fluoride Releases 101
7.2 Hydrogen Fluoride Detectors Used by Specific Industries 103
7.3 General Industry Practices to Mitigate Hydrogen Fluoride Releases 104
7.4 Hydrogen Fluoride Mitigation Systems Used by Specific Industries 107

8. CHARACTERIZATION OF HYDROGEN FLUORIDE ACCIDENTS 113

8.1 Examples of Major Accidents 113
8.2 Analysis of HF Accident Databases 114
8.3 Overview of HF Accident Data 120

9. MODELING HYDROGEN FLUORIDE RELEASES 129

9.1 Consequence Analysis.. 129
9.2 Models for HF Releases 130
9.3 Modeling Used in HF Study 135
9.4 Worst-Case Accident Scenarios 139
9.5 Descriptions of Scenarios Used in HF Study 143
9.6 Limitations of the Modeling Results 148
9.7 Resultsand Analysis 151
9.8 Sensitivity Analysis. 155
9.9 Summary 160

ED_002700_00005500-00003

TABLE OF CONTENTS (CONTINUED)

Page

10. COMMUNITY AND FACILITY EMERGENCY PREPAREDNESS AND PLANNING . . , ... 167

10.1 Emergency Preparedness and Planning 167
10.2 Industry Programs and Cooperation with the Community 168
10.3 Ways to Improve Facility Emergency Preparedness and Planning 169
10.4 Community Efforts to Promote Emergency Preparedness and Planning 170

11. FINDINGS AND RECOMMENDATIONS . . . . . , ... , ... , ... 173

11.1 Findings 173
11.2 Recommendations.. 180

APPENDICES

APPENDIX I - Summary Notes from Hydrogen Fluoride Roundtable

APPENDIX II - Summary of Comments from Technical Reviewers on Draft Hydrogen Fluoride Study

APPENDIX III - Summary of Oral and Written Comments from Public Meeting on Hydrogen Fluoride Study

APPENDIX IV - Exposure Levels for Hydrogen Fluoride

APPENDIX V - Overview of Probit Equations

APPENDIX VI - Example of Medical Treatment Guidelines from a Hydrogen Fluoride Producer

APPENDIX VII - Facilities Reporting to TRI for Hydrogen Fluoride, 1990

APPENDIX VIII- U.S. Producers of Fluorocarbons and of Other Chemicals Manufactured with Hydrogen Fluoride or Chlorofluorocarbons

APPENDIX IX - U.S. and Canadian Petroleum Refineries with Hydrogen Fluoride Alkylation Units

APPENDIX X - Rule 1410: SCAQMD Regulation on Hydrogen Fluoride Storage and Use

APPENDIX XI - Containers for Transportation of Hydrogen Fluoride

APPENDIX XII - Data Base Sources for Accident Information

APPENDIX XIII - Descriptions of Hydrogen Fluoride Accidents

TABLE OF CONTENTS (CONTINUED)

APPENDIX XIV - Deaths, Injuries, or Evacuations Caused by Hydrogen Fluoride Accidents

APPENDIX XV - Population Characterization

APPENDIX XVI - Description of HGSYSTEM and **SLAB**

APPENDIX XVII - Inputs for HGSYSTEM and **SLAB** Models

BIBLIOGRAPHY

ED_002700_00005500-00005

TABLE OF CONTENTS (CONTINUED)

Page

LIST OF EXHIBITS

EXHIBIT 2-1 - Physical/Chemical Properties of Hydrogen Fluoride 7

EXHIBIT 2-2 - Exposure Guidelines For Several Toxic Substances Compared to Hydrogen Fluoride 10

EXHIBIT 3-1 - U.S. Production Capacity for 1992 29

EXHIBIT 3-2 - Non-US. North American Hydrogen Fluoride Producers and Shippers . . 20

EXHIBIT 3-3 - Examples of Hydrogen Fluoride Uses 22

EXHIBIT 34 - Types of Facilities Reporting to TRI for Hydrogen Fluoride 23

EXHIBIT 3-5 - End Uses of Hydrogen Fluoride 24

EXHIBIT 3-6 - Major Users and Producers of Anhydrous Hydrogen Fluoride 26

EXHIBIT 4-I - Regulatory Designations of Hydrogen Fluoride 32

EXHIBIT 4-2 - DOT Initial Isolation and Protective Action for Anhydrous Hydrogen Fluoride 35

EXHIBIT 4-3 - DOT Response Guide for Anhydrous Hydrogen Fluoride . . , . , ... 37

EXHIBIT 4-4 - DOT Response Guide for Aqueous Hydrogen Fluoride , , , , , , , , , , , , , 38

EXHIBIT 5-1 - Hydrogen Fluoride **Manufacturing** Process 54

EXHIBIT 5-2 - Nitrogen Unloading of Hydrogen Fluoride From Tank Truck 58

EXHIBIT 5-3 - Pump Unloading of Hydrogen Fluoride From Tank Car 59

EXHIBIT 54 - CFC Manufacturing Process 60

EXHIBIT 5-5 - Phillips Alkylation Process 63

EXHIBIT 5-6 - Phillips Hydrogen Fluoride System Reactor 64

EXHIBIT 5-7 - UOP Alkylation Process 66

EXHIBIT 6-1 - Hazard Evaluation Procedures 81

EXHIBIT 8-1 - Hydrogen Fluoride Events in the **ARIP** Database 115

EXHIBIT 8-2 - Release Point From **ARIP** Data. 117

TABLE OF CONTENTS (CONTINUED)

Page

LIST OF EXHIBITS (CONTINUED)

EXHIBIT 8-3 - Release Cause From **ARIP** Data 117

EXHIBIT 8-4 - How Was the Release Discovered? 118

EXHIBIT 8-5 - Source of Transportation Leaks 119

EXHIBIT 8-6 - Failure Types From HMIS Data 120

EXHIBIT 8-7 - Industry Segment and Number of HF Releases 122

EXHIBIT 8-8 - Releases of Aqueous and Anhydrous HF Resulting in Injuries or Deaths 124

EXHIBIT 8-9 - Number of Reported Injuries or Deaths Associated with all HF Releases . 124

EXHIBIT 8-10 . Analysis of Anhydrous Hydrogen Fluoride Incidents 126

EXHIBIT 9-I - Models Available for Simulation of Accidental Releases of **Hydrogen Fluoride** 133

EXHIBIT 9-2 - Release Mechanism Flowchart 137

EXHIBIT 9-3 - Catastrophic Vessel Failure Scenarios 142

EXHIBIT 94 - Range of Other Scenarios 142

EXHIBIT 9-5 - Modeling Results of Catastrophic Vessel Failures 152

EXHIBIT 9-6 - Modeling Results of a Range of Other Scenarios 153

EXHIBIT 9-7 - Sensitivity Analysis - Wind Speed and Stability 157

EXHIBIT 9-8 - Sensitivity Analysis - Release Rate 157

EXHIBIT 9-9 - Sensitivity Analysis - Relative Humidity 158

EXHIBIT 9-10 - Sensitivity Analysis Surface Roughness . . . . . , 158

EXHIBIT II-1 - Reviewers Who Commented on Draft Hydrogen Fluoride Report II-10

EXHIBIT III-I - Reviewers Who Submitted Written Comments on the Preliminary Findings III-I 1

EXHIBIT IV-I - Comparison of Regulatory and Guideline Exposure Levels for Hydrogen Fluoride and Other Toxic Substances . . . . . , ... IV-2

EXHIBIT V-I - **Probit** Table . . . . . , ... V-2

TABLE OF CONTENTS (CONTINUED)

LIST OF EXHIBITS (CONTINUED)

EXHIBIT V-2 - Coefficients for Four **Probit** Equations V-4

EXHIBIT V-3 - Results Based on Several **Probit** Equations for Five-Minute Exposures . . V-4

EXHIBIT V-4 - Results Based on Several **Probit** Equations for 30-Minute Exposures . . . V-5

EXHIBIT V-5 - Results Based on Several **Probit** Equations for 60-Minute Exposures . . . V-5

EXHIBIT VIII-I - U.S. Producers of Fluorocarbons VIII-2

EXHIBIT VIII-2 - Other Chemicals Manufactured Using Hydrogen Fluoride or Based on Another Hydrogen Fluoride Product VIII-3

EXHIBIT IX-I - Petroleum Refineries With Hydrogen Fluoride Alkylation Units IX-2

EXHIBIT XI-I - Department of Transportation Regulations for the Transportation of Hydrogen Fluoride XI-2

EXHIBIT XI-2 - Typical Class 105A300W Tank Car XI-4

EXHIBIT XI-3 - Typical Railway Tank Car Specifications - Class 105A300W XI-5

EXHIBIT XI-4 - Railway Tank Car Specifications XI-6

EXHIBIT XI-5 - Motor Vehicle Tank Specifications XI-7

EXHIBIT XI-6 - Cylinder Specifications XI-7

EXHIBIT XIII-I - General Descriptions of Hydrogen Fluoride Accidents From the **ARIP** Database XIII-2

EXHIBIT XIII-2 - General Descriptions of Hydrogen Fluoride Accidents From the **AHE** Database XIII-6

EXHIBIT XIII-3 - General Descriptions of Hydrogen Fluoride Accidents From the ERNS Database XIII-8

EXHIBIT XIII-4 - General Descriptions of Hydrogen Fluoride Accidents From the HMIS Database XIII-13

EXHIBIT XIII-5 - General Descriptions of Hydrogen Fluoride Accidents From the Other Sources XIII-15

EXHIBIT XIV-1 - Deaths, Injuries, or Evacuations Caused by Hydrogen Fluoride Accidents Listed in the **ARIP** Database XIV-1

TABLE OF CONTENTS (CONTINUED)

LIST OF EXHIBITS (CONTINUED)

EXHIBIT XIV-2 - Deaths, Injuries, or Evacuations Caused by Hydrogen Fluoride Accidents Listed in the **AHE** Database **XIV-2**

EXHIBIT XIV-3 - Deaths, Injuries, or Evacuations Caused by Hydrogen Fluoride Accidents Listed in the ERNS Database XIV-3

EXHIBIT XIV-4 - Deaths, Injuries, or Evacuations Caused by Hydrogen Fluoride Accidents Listed in the HMIS Database XIV-4

EXHIBIT XIV-5 - Deaths, Injuries, or Evacuations Caused by Hydrogen Fluoride Accidents Listed in Newspapers and Accident Reports XIV-5

EXHIBIT XV-1 - Population Characterization XV-2

EXHIBIT XVI-I - Descriptions of Models in HGSYSTEM XVI-2

EXHIBIT XVI-I - Descriptions of Source Types in **SLAB** XVI-4

EXHIBIT XVII-1a, b Inputs for HGSYSTEM Models: HFSPILL and HFPLUME, HEGADAS-S and HEGADAS-T XVII-2

EXHIBIT XVII-1c - Inputs for HGSYSTEM Models: HFSPILL and HFPLUME or EVAP-HF, and HEGADASS and HEGADAS-T XVII-6

EXHIBIT XVII-2- Inputs for SLAB Models..... XVII-8

ED_002700_00005500-00009

ACRONYMS (CONTINUED)

EEC	European Economic Community
EEGL	Emergency Exposure Guidance Level
EHS	Extremely Hazardous Substance
EPA	Environmental Protection Agency
EPCRA	Emergency Planning and Community Right-to-Know Act
ERNS	Emergency Release Notification System
ERPG	Emergency Response Planning Guideline
FEMA	Federal Emergency Management Agency
FMECA	Failure Modes, Effects, and Criticality Analysis
FTA	Fault Tree Analysis
HazOp	Hazard and Operability (studies)
HCFC	Hydrochlorofluorocarbon
HF	Hydrogen fluoride
HFC	Hydrofluorocarbon
HMIS	Hazardous Materials Information System
HMR	Hazardous Materials Regulations
HMTA	Hazardous Materials Transportation Act
HMTUSA	Hazardous Materials Transportation Uniform Safety Act
HSDB	Hazardous Substance Data Bank
HSE	Health and Safety Executive
ICHMAP	Industry Cooperative HF Mitigation/Assessment Program
IDLH	Immediately Dangerous to **Life** and Health
LAB	Linear alkylbenzene
LABS	Linear alkylbenzyl sulfonate
LEPC	Local Emergency Planning Committee
MIACC	Major Industrial Accidents Council of Canada
MIBK	Methyl-isobutyl ketone
MSDS	Material Safety Data Sheet
MTBE	Methyl ten-butyl ether
NAS	National Academy of Science
NIOSH	National Institute for Occupational Safety and Health
NLM	National Library of Medicine
NOAA	National Oceanic and Atmospheric Administration
NOV	Notice of Violation
NPDES	National Pollutant Discharge Elimination System
NRC	National Response Center
NTIS	National Technical Information Service
OECD	Organisation for Economic Co-operation and Development
OSC	On-Scene Coordinator
OSHA	Occupational Safety and Health Administration

ED_002700_00005500-00010

ACRONYMS

AAR	Association of American Railroads
ACMH	Advisory Committee on Major Hazards
AEC	Atomic Energy Commission
AGIR	Aide a' la Gestion Industrielle des Bisques
AHE	Acute Hazardous Events (database)
AHF	Anhydrous Hydrogen Fluoride
AIChE	American Institute of Chemical Engineers
AIHA	American Industrial Hygiene Association
ANSI	American National Standards Institute
APELL	Awareness and Preparedness for Emergencies at the Local Level
API	American Petroleum Institute
ARCO	Atlantic Richfield Company
ARIP	Accidental Release Information Program
ASME	American Society of Mechanical Engineers
ASNT	American Society for Non-destructive Testing
AS0	Acid-Soluble Oil
ASTM	American Society for Testing and Materials
BOE	Buffered Oxide Etch
BP	British Petroleum
CAA	Clean Air Act
CAAA	Clean Air Act Amendments of 1990
CAMEO	Computer-Aided Management of Emergency Operations
CAS	Chemical Abstract Service
CCPA	Canadian Chemical Producers Association
CCPS	Center for Chemical Process Safety
CEFIC	Consell Europeen des Federations de l'Industrie Chimique (European Chemical Industry Council)
CEPA	Canadian Environmental Protection Act of 1988
CERCLA	Comprehensive Environmental Response, Compensation and Liability Act
CFC	Chlorofluorocarbon
CFR	Code of Federal Regulations
CHEMTREC	Chemical Transportation Emergency Center
CIMAH	Control of Industrial Major Accident Hazards
CMA	Chemical Manufacturers Association
CMNIG	Chemical Manufacturing National Industry Group
CPQRA	Chemical Process Quantitative Risk Analysis
CTEF	Comite Technique Européen de Fluor (European Technical Committee on Fluorine)
DDBS	(Sodium) Dodecyl-Benzene Sulfonate
DEGADIS	Dense Gas Dispersion Model
D I	Deionized water
DOE	Department Of Energy
DOT	Department Of Transportation

ED_002700_00005500-00011

PEL	Permissible Exposure Limits
PHA	Preliminary Hazard Analysis
ppm	Pans per million
Probit	Probability unit
PSM	Process Safety Management
QRA	Quantitative Risk Assessment
RCRA	Resource Conservation and Recovery Act
RMPP	Risk Management and Prevention Program
RP	Recommended Practice
RTU	Remote Terminal Unit
SAB	Science Advisory Board
SARA	Superfund Amendments and Reauthorization Act
SCAQMD	South Coast Air Quality Management District
SCBA	Self-Contained Breathing Apparatus
SERC	State Emergency Response Commission
SMCL	Secondary Maximum Contaminant Level
SPEGL	Short-Term Public Exposure Guidance Level
STEL	Short-Term Exposure Limit
TACB	Texas Air Control Board
TAME	Tertiary amyl methyl ether
TCAA	Texas Clean Air Act
TNO	Nederlandsche Organisatie voor Toegepast - Natuurwetenschappelijkonderzock (Netherlands Organization for Applied Scientific Research)
TPQ	Threshold Planning Quantity
TRI	Toxic Release Inventory
TWA	Time-Weighted Average
UNEP	United Nations Environmental Programme
UOP	Universal Oil Products
UPS	Uninterrupted Power Supply
VOC	Volatile Organic Compound
VLSI	Very Large-Scale Integrated (circuits)

ED_002700_00005500-00012

This page left intentionally blank

ED_002700_00005500-00013

EXECUTIVE SUMMARY

Background

Under section 112(n)(6) of the Clean Air Act of 1990, as amended, Congress required EPA to carry out a study of hydrofluoric acid (also called hydrogen fluoride (HF)), to identify potential hazards to public health and the environment considering a range of events including worst-case accidental releases, and to make recommendations for reducing the hazards, if appropriate. This report, developed in response to the Congressional mandate, identifies and evaluates the hazards to the public posed by the production and use of HF. It is not intended to quantify risk to the public from HF. Analysis of public exposure to routine emissions was not included in this study because the statutory language focuses on worst-case releases from accidents. EPA Is submitting this report to Congress in fulfillment of Section 112(n)(6) of the Clean Air Act as amended.

Summary Findings and Recommendations

HF is used Industrially in large quantities throughout the United States (over 200,000 tons per year) and In a great number of applications across a broad range of Industries (over 500 facilities). It serves as a major feedstock and source of the fluorine molecule for the production of fluorinated compounds.

An accidental release of HF from one of these industrial facilities could have severe consequences. HF is toxic to humans, flora, and fauna In certain doses and can be lethal as demonstrated by documented workplace accidents. HF can travel significant distances downwind as a dense vapor and aerosol under certain accidental release conditions. Because HF can exist as an aerosol, the cloud can contain a substantially greater quantity of the chemical than otherwise would be the case. Thus, the potentially high concentration of HF In these dense vapor and aerosol clouds could pose a significant threat to the public, especially in those Instances where HF is handled at facilities located In densely populated areas. Prompt and specialized medical attention is necessary to treat HF exposure properly.

However, the risk to the public of exposure to HF is a function of both the potential consequences and the likelihood of occurrence of an accidental release: and the likelihood of an accidental release of HF can be kept low if facility owners/operators exercise the general duty and responsibility to design, operate, and maintain safe facilities. In particular, owners/operators can achieve an adequate margin of protection both for their workers and the surrounding community by assiduously applying existing industry standards and practices, existing regulations, and future guidance and regulations applicable to various classes of hazardous substances in various settings. The properties that make HF a potentially serious hazard are found Individually or In combination in many other industrial chemicals; thus, HF does not require unique precautions. Instead, within each of the several different circumstances in which HF is handled, an appropriate combination of general and special precautions should result in: (1) the safe management of HF and other hazardous substances with an emphasis on accident prevention; (2) the preparedness to properly and quickly respond to chemical emergencies and to provide specialized medical treatment if necessary; and (3) community understanding of the risks Involved.

The EPA does not recommend legislative action from the Congress at this time to reduce the hazards associated with HF. The Agency believes that the legislative authorities already in place provide a solid framework for the prevention of accidental chemical releases and preparedness in the event that they occur. The Agency recommends that facilities handling HF coordinate closely with their Local Emergency Planning Committees (LEPCs). LEPCs and facilities that handle HF should

ED_002700_00005500-00014

conduct drills and exercises to test mitigation, response, and medical treatment for a simulated HF accident. Furthermore, the Agency recommends that facilities actively conduct outreach efforts to ensure that the community is aware of the hazards of HF, that protective measures are in place to protect public health in the event of an accident, and that proper actions will be taken during an emergency. Facilities should be able to rapidly detect, mitigate, and respond to accidental releases in order to minimize the consequences (e.g., through detection, monitoring, mitigation, and alert or alarm systems). Finally, the EPA will continue to support research and development efforts for process safety improvements and implementation, modeling and assessment improvements, and accidental release monitoring and detection improvements.

Summary of Report

HF is a very corrosive and toxic inorganic acid. It can either be a gas or liquid in anhydrous form (without water; 100 percent HF) or in aqueous solution (with water). Exposure to HF can cause injury through inhalation, direct contact, or ingestion. HF is particularly caustic to tissue and exposure may require special treatment. HF is one of the more corrosive and toxic industrial chemicals, but it is not unique among hazardous chemicals; other inorganic acids are similarly corrosive (e.g., hydrochloric acid), and some other relatively common chemicals are similarly toxic or more toxic than HF (e.g., chlorine). HF boils at 67 ^{o}F, a temperature that is frequently exceeded under ambient conditions, Consequently, if HF liquid is released, it may vaporize under ambient conditions.

HF exhibits release characteristics in some circumstances that may make it particularly hazardous to the public. HF molecules may associate with one another (i.e., form larger molecules like H_4F_4, H_6F_6, H_8F_8) via hydrogen bonding; such molecules may form a cloud that is heavier than air. A vapor cloud of single, unassociated HF molecules will be lighter than air. A cloud that is lighter than air is likely to disperse more readily than one that is heavier than air. In addition, if HF is released under pressure above its boiling point, droplets of HF may be carried into the air as aerosol along with HF vapor. Anhydrous HF released under pressure above its boiling point may form a cloud of vapor and aerosol that is heavier than air and that may travel for long distances close to the ground, posing a threat to people in its path. Although an HF vapor cloud may form under some conditions from a release of an aqueous solution of HF, depending on concentration and release temperature, anhydrous HF is much more likely to form a vapor cloud and, therefore, is potentially more hazardous to the public.

HF has been a focus of interest to industry for several years. Industry groups have carried out research and tests to characterize the behavior of HF upon release, improve dispersion modeling techniques, and to test systems for mitigation of HF releases. A large accidental release of HF at a petroleum refinery drew additional attention to the hazards of HF releases. The South Coast Air Quality Management District (SCAQMD) studied the hazards of HF use and production in the Los Angeles Basin and adopted regulations phasing out the use of anhydrous HF within the Basin. These regulations were litigated, during which time their implementation was suspended by the court. However, a recent court decision permitted implementation of the rule after additional rulemaking procedures are conducted.

HF is produced at three sites in the United States: Allied-Signal, in Geismar, Louisiana; Du Pont Chemicals in La Porte, Texas; and Elf Atochem in Calvert City, Kentucky. Production capacity was approximately 206,000 tons in 1992. Both anhydrous and aqueous HF have a wide variety of uses. The largest use is the manufacture of fluorine-containing chemicals, particularly chlorofluorocarbons (CFCs). Fluorocarbon manufacture consumes 63 percent of the total HF used. HF also may be used as an alkylation catalyst for the production of gasoline blending components; this use consumes 7 percent of the total. Other uses include aluminum production (3 percent, with additional HF produced and used captively) and nuclear applications (5 percent). A number of other uses, including stainless steel pickling, manufacture of various chemical derivatives and products,

ED_002700_00005500-00015

electronics, specialty metal production, and glass etching and polishing, consume the remaining 22 percent of HF produced.

HF is regulated under a number of U.S. statutes. It is listed as a hazardous substance under the Comprehensive Environmental Response, Compensation, and Liability Act (CERCLA), as a hazardous waste under the Resource Conservation and Recovery Act (RCRA), as an extremely hazardous substance under section 302 of the Emergency Planning and Community Right-to-Know Act (EPCRA), as a toxic substance under EPCRA section 313, as a hazardous material in transportation under Department of Transportation regulations, as an air contaminant under the Occupational Safety and Health Act (OSHA) Air Contaminants Standard, and as a highly hazardous chemical under the OSHA Process Safety Management Standard. HF has been proposed as a regulated substance for accidental release prevention under section 112(r) of the Clean Air Act. HF is subject to risk management programs in several states, including California, Delaware, Nevada and New Jersey. All of these regulations include HF as one of a number of regulated substances. The South Coast Air Quality Management District in the Los Angeles Basin is the only government agency that has adopted specific regulations for HF; these regulations would phase out use of anhydrous HF, would require interim control measures, and would impose reporting and inventory requirements.

Industry has taken steps specifically to address and minimize the hazards of HF use and production. The American Petroleum Institute (API), the major trade association of the petroleum industry, has developed recommended practices for operating and maintaining HF alkylation units at refineries; the procedures and practices described are intended to minimize the potential for an HF release, mitigate the effects of a release if it occurs, and provide for oversight and audit of the entire process. The National Petroleum Refiners Association endorses the API recommended practice. The Chemical Manufacturers Association (CMA) sponsors an HF Mutual Aid Group comprised of specially trained teams that respond to emergencies involving HF. Companies that produce and use HF have also formed an HF Panel under CMA auspices. The purpose of the panel is to make safety, health, and environmental information available to the entire industry. The panel appoints various Task Groups to address aspects of HF safety, and develops and maintains guidelines for the safe handling of HF.

In the process of conducting the study and gathering information about HF, EPA visited a number of facilities that produce or use HF and observed the procedures used to promote process safety. These procedures include designing equipment for HF use to minimize hazards; regularly testing, inspecting, and maintaining equipment; and training workers. Some facilities have installed HF detection systems; however, reliable and accurate HF detectors have been difficult to develop, particularly for perimeter monitoring. A number of facilities also have mitigation systems to reduce the quantity or concentration of HF if a release occurs. Systems include water spray systems to knock down HF vapors in case of a release, scrubber systems to absorb HF vented from process streams, and emergency de-inventory systems to rapidly move HF from failed equipment to safe equipment. Facilities also use remotely-operated emergency isolation valves to prevent and mitigate releases. Because EPA observed practices only at selected sites, it is not clear to what extent practices to promote HF safety are used at HF facilities in all industry segments,

Special equipment is used in transportation to prevent releases in case of a transportation accident. U.S. HF producers transport anhydrous HF in rail cars that exceed DOT safety requirements and have headshields and shelf couplers to protect the tanks in the event of a derailment. Safety relief valves on tank cars and trucks are used to release HF gas in the event of overpressurization. These valves are protected by extra heavy rollover type domes. Valves for loading and unloading are also contained within the rollover protection dome on the top of the tanks. HF producers provide rigorous training programs for drivers of HF vehicles. They also may conduct route risk analysis. One HF producer has installed a satellite tracking system to track HF trucks. Loading and unloading of HF from transport containers is often cited as a point where a release could occur, particularly as a result

of failure of a transfer hose. To prevent releases, specially designed transfer hoses are used, and precautions are taken to prevent corrosion of piping, valves, and vessels.

A large release of HF from a refinery in 1987 led to formation of a vapor cloud that migrated through a residential area, causing a number of injuries, a large-scale evacuation, and damage to vegetation. In general, however, there have been relatively few reports of accidents involving HF, and only a small fraction of these caused impact to the public. There have been no off-site deaths repotted from HF releases although some worker deaths have occurred. EPA's analysis of accident data is consistent with the expectation that releases of anhydrous HF or concentrated aqueous HF solution (70 percent HF) pose more hazards both on-site and off-site than less concentrated aqueous HF.

For its analysis of the hazards to the public from HF, EPA carried out consequence analysis, using computer modeling techniques, for a range of worst-case accident scenarios. Modeling indicated that releases of large quantities of HF over a short period of time (e.g., resulting from catastrophic vessel failure) could pose a hazard to people far beyond facility boundaries, particularly under low wind speeds and stable atmospheric conditions. This type of accident is highly unlikely, but, based on modeling results, has the potential to cause great harm. Smaller releases may or may not pose a hazard beyond a facility fenceline depending on the circumstances of the release. Mitigation systems (e.g., water spray, emergency de-inventory, automatic shutoff valves) were also modeled and shown to reduce affected distances downwind. EPA did not consider the probability involved with these worst-case accident scenarios.

While visiting HF facilities to observe management practices, EPA also gathered information on the Interaction between communities and facilities for emergency preparedness and planning. In the event of a release of HF, coordination between the community and the facility would help community officials react quickly and take proper actions to protect the public. EPCRA (SARA Title III), mandated the formation of Local Emergency Planning Committees (LEPCs) to develop emergency response plans for chemical accidents. Some HF facilities are members or supporters of LEPCs. HF facilities in some industries have established mutual aid agreements that may also involve community officials. Some HF facilities cooperate with local government agencies in activities such as conducting emergency drills. The Chemical Manufacturers Association (CMA) has developed a community-oriented program called the Community Awareness Emergency Response (CAER) program which recommends ways for chemical facilities to develop working relationships with communities to address emergency situations involving many chemicals including HF. EPA's observations indicated that in some areas near HF facilities, the public has not shown much concern or interest in the hazards of HF and other chemicals, or in emergency preparedness and planning for chemical accidents. Also, some facilities acknowledge that facility outreach can be greatly improved.

ED_002700_00005500-00017

1. INTRODUCTION

The purpose of this report to Congress is to study the hazards associated with the production and uses of hydrofluoric acid and to make recommendations about reducing these hazards based on the findings, In this report anhydrous hydrogen fluoride will be designated as HF; aqueous solutions of hydrogen fluoride will be called aqueous HF. This distinction is important especially when considering such things as severity of exposure, corrosivity, and likelihood of fuming and forming dense vapor clouds upon release. Although worker exposure and environmental impacts from routine emissions are important issues, this report focuses primarily on the potential hazards to the public from accidental releases of HF during production, use, transport, transfer, and storage. Analysis of public exposure to routine emissions was not included in this study because the statutory language focuses on worst-case releases from accidents.

1.1 Background

EPA was directed by Congress to carry out a study of hydrofluoric acid, a toxic, corrosive material, which when released under certain conditions, can form a dense vapor cloud, travel downwind, and pose a serious threat to the public. This report, developed in response to the Congressional mandate, identifies and evaluates hazards to the public posed by the production and use of HF. EPA is submitting this report to Congress in fulfillment of Section 112(n)(6) of the Clean Air Act as amended:

> ***"Hydrofluoric Acid*** *- Not later than 2 years after the date of enactment of the Clean Air Act Amendments of 1990, the Administrator shall, for those regions of the country which do not have comprehensive health and safety regulations with respect to hydrofluoric acid, complete a study of the potential hazards of hydrofluoric acid and the uses of hydrofluoric acid in industrial and commercial applications to public health and the environment considering a range of events including worst-case accidental releases and shall make recommendations to the Congress for the reduction of such hazards, if appropriate."*

HF is manufactured and used in the U.S. primarily for the production of fluorocarbons (63%); for solutions used for glass etching, cleaning, stainless steel pickling, and chemical derivatives (9%); as a catalyst for the production of gasoline (7%): for nuclear applications (5%); and for aluminum production (3%). For the majority of the uses, there is no currently known viable alternative production method or substitute chemical.

HF is known to be a hazard because of its toxicity and corrosivity. Exposure to HF can cause injury through inhalation, direct contact, or ingestion, HF is particularly caustic to tissue. HF exposure may require special treatment. HF can also form dense vapor clouds upon release and travel downwind. However, such properties are not limited to HF. The formation of toxic, dense vapor clouds can also potentially occur if chlorine (Cl_2) ammonia (NH_3), and other toxic gases like phosgene are accidentally released. In 1990, 34 and 22 billion pounds of NH, and Cl, were produced,' respectively, while only 0.4 billion pounds of HF were produced.*

During the summer of 1986, Amoco, Allied-Signal, Du Pont, and Lawrence Livermore National Laboratory voluntarily conducted a series of six experiments involving atmospheric releases of HF in an attempt to characterize its behavior. These studies, known as the Goldfish studies, were conducted at the Department of Energy Liquefied Gaseous Fuels Spill Test Facility in Nevada and showed that the HF did not remain a liquid following the release. Instead, under the conditions simulating a petroleum refinery HF alkylation unit release (i.e., HF above its boiling point and liquefied under pressure), a cold, dense cloud containing aerosol was generated which traveled a substantial distance downwind from the release point at ground level. This result led industries involved in the

ED_002700_00005500-00018

use or production of HF to improve dispersion modeling techniques and release mitigation systems. The Goldfish tests facilitated the formation of an extended consortium of twenty energy and chemical companies which subsequently began a program to improve dispersion models and collect data on mitigation of HF releases. This group performed the 1988 Hawk series tests at the DOE Nevada site for this purpose.[3]

Additional attention was focused on the use of HF as an alkylation catalyst at petroleum refineries, because of a large accidental release that occurred on October 30, 1987, at the Marathon Petroleum Company refinery in Texas City, Texas. The release occurred when a 50-foot, multi-ton heater convection unit was being moved for maintenance and repair and was accidentally dropped onto an HF acid vessel. The unit severed a 4-inch acid loading line and a 2-inch pressure relief line, causing the release of between 30,000 and 53,000 pounds of HF over a 44 hour period.[4,5] As a result of the high release rate immediately following the accident, the vapors initially migrated to an adjacent residential area. Eighty-five square blocks and approximately 4,000 residents were evacuated; 1,037 residents were treated at three neighboring hospitals with skin, eyes, nose, throat, and lung irritation.[6] Vegetation was also damaged in the path of the vapor cloud, but no fatalities occurred.

A 100-pound release of HF at a refinery in Torrance, California on November 24, 1987, further focused public concern in California on the hazards posed by HF, especially at petroleum refineries. Studies by the South Coast Air Quality Management District (SCAQMD) in the Los Angeles basin led to adoption of specific regulations which phase out the use of anhydrous HF (unless its properties are modified), require interim control measures, and impose reporting and storage/use inventory requirements. As the only regulation in the U.S. directed specifically at anhydrous HF, Rule 1410 is partly intended to eliminate the possibility of harm to the public in the Los Angeles basin due to an unmitigated accidental release of HF. As a result of legal action, these regulations were temporarily suspended.

EPA's evaluation of the processes and practices associated with the production and uses of HF (see section 6.2) indicates that the techniques, processes, and equipment used in the various HF industry segments are no different than those commonly used in the chemical manufacturing and petroleum refining industries in the U.S. EPA visited a number of facilities during the course of this study. The facilities visited were exemplary in their approaches to handling HF; however, there have been serious problems at some facilities involving not only HF but other hazardous materials. Such problems indicate the need for process safety management for HF and other hazardous chemicals, as well as the need to communicate crucial information to stakeholders and the public on how to prevent, mitigate and respond to HF releases.

1.2 Purpose

EPA performed this study:

- to gather information from producers, users, and other stakeholders in the HF issues, and compile that information into a document for public dissemination;
- to foster communication between the various stakeholders who have an interest in HF issues:
- to gather information on technically sound methods with which to solve potential safety problems associated with the industrial production and uses of anhydrous HF; and

ED_002700_00005500-00019

- to identify the issues and problems which remain to be solved.

This study attempts to:

- characterize how and where HF is produced and used in the U.S.;
- identify and characterize the hazards specific to those uses and processes;
- identify how industry segments try to manage and mitigate those hazards;
- assess the potential hazards posed to the public and the environment from HF releases; and
- identify approaches to minimize hazards and maximize safety associated with HF and to identify issues which need additional evaluation.

These issues must be explored and dealt with effectively to protect the health and safety of the public, and the environment.

1.3 Approach

EPA believed that this study should reflect input from those individuals and organizations with a 'stake" or interest in its outcome. Such stakeholders include environmental groups, labor, industry, trade associations, professional societies, and state and federal government agencies. Consequently, EPA held a "Roundtable" meeting on October 17, 1991 in Fairfax, Virginia, with individuals representing these interests. The goals of the Roundtable were to solicit input on the major issues surrounding HF use, to develop ways to address critical HF issues, and to establish a group of technical reviewers for the study. A summary of the meeting notes from the Roundtable is provided in Appendix I.

After the Roundtable, EPA met individually with some stakeholders to discuss specific issues including quantitative risk assessment, realistic HF release scenarios, release prevention techniques, release mitigation techniques, and any research efforts underway or contemplated concerning the reduction of hazards associated with the use of HF. Stakeholders also provided EPA with documents such as hazard and risk assessments, HF safe handling procedures, relevant articles about HF, and release and dispersion modeling studies. In addition, EPA conducted its own extensive literature search and contacted numerous other potential stakeholders and international agencies and industrial groups. EPA also used several accidental release databases maintained by EPA, OSHA, DOT, and other organizations to gather historical documentation on accidental HF releases, their causes and consequences.

EPA's preliminary analysis indicated that the greatest hazards of HF are associated with the manufacture and use of anhydrous HF as opposed to aqueous HF. This finding was reinforced by the Roundtable meeting and meetings with other stakeholders. For this reason, EPA decided to focus its effort on the assessment of major hazards associated with accidental anhydrous HF releases during manufacture and use.

EPA conducted site visits to various facilities that produce or use HF across the U.S. These visits provided a firsthand opportunity to obtain in-depth information about the industrial processes involving HF, the facilities' process safety management programs, training programs, community outreach programs, emergency preparedness and planning programs, hazard evaluation and risk

ED_002700_00005500-00020

assessment methods, release prevention systems, and mitigation systems. Tours of the process areas enabled EPA to observe process safety and HF handling techniques. Sites visited included facilities in the HF production industry, the petroleum refining industry, the chlorofluorocarbon manufacturing industry, the semiconductor industry, and the aluminum production industry.

In the preparation of the study, the Agency consulted with contacts in Canada, the United Kingdom, France, the Netherlands, Sweden, and other countries to ensure that the most updated information concerning international efforts to assess and manage HF was included in the report. EPA also had representatives from industry, academia, and local governments review an early draft of the HF report (May 8, 1992) to verify the technical accuracy and completeness of the information contained in the report. A list of the reviewers and a summary of their comments are provided in Appendix II.

The Hydrogen Fluoride Review Subcommittee of the Environmental Engineering Committee of the EPA Science Advisory Board (SAB) also reviewed an early draft of the technical aspects of the HF report (May 8, 1992). The SAB's primary suggestions included a more rigorous definition of the concepts of hazards, consequences, and worst-case scenarios, the development of a credible worst-case accidental release scenario, and the further consideration of exposure time in the dose response analysis. The SAB also made recommendations on the use of dispersion models as they apply to various accident scenarios.' As a result of SAB recommendations, the report was revised to clarify the definitions of certain concepts, to expand modeling input descriptions, to base consequence analysis on dose rather than on concentration, and to address the issues and limitations involved in developing worst-case scenarios. A list of members of the SAB Hydrogen Fluoride Review Subcommittee is provided along with other technical reviewers in Exhibit II-1 of Appendix II.

EPA also held a public meeting on July 12, 1998 to present and discuss the preliminary findings of the HF report. The meeting provided a forum for oral and written comments to be presented by individual attendees. A summary of these comments is provided in Appendix III.

1.4 Organization of the Report

This report integrates information gathered about HF into a presentation that provides:

- an overview of what HF is chemically and physically and how it reacts upon release;
- a picture of how, where, and in what form and quantity HF is produced and used in the US.;
- an overview of regulatory controls and industrial standards and guidelines already or soon to be in place to manage HF safely for protection of worker and public health and safety and the environment;
- a characterization of specific HF industries and the processes involved in producing and using HF;
- an evaluation of general process hazards as well as a focus on any special or unique hazards associated with the HF processes under consideration;
- a discussion of chemical process safety management and the specific HF industry practices in place to prevent or minimize the impact of accidental releases;
- an overview of release detection and mitigation systems in place and under consideration in the event of an accidental HF release:

ED_002700_00005500-00021

- an analysis of historical HF accidental releases to identify the causes and consequences of releases, to determine how HF chemical and process hazards contribute to accidental releases, and to determine how to prevent such releases:
- a discussion of computer models to analyze the consequences of HF releases and a consequence analysis performed by EPA on worst-case accidental releases;
- a discussion of emergency preparedness and planning considering both the industry and community perspective:
- identification of issues and questions that remain to be resolved: and
- EPA's findings and recommendations.

ED_002700_00005500-00022

ENDNOTES

1. "Production by the U.S. Chemical Industry, Little Change in Chemical Output Last Year," *Chemical and Engineering News,* June 24, 1991, pp 30-81. (372.7)

2. SRI International, *1991 Directory of Chemical Producers United States of America,* Menlo Park, CA, 1991, p 704. (450)

3. Seringer, Carolyn S., Du Pont Chemicals, comments from technical review of Hydrogen *Fluoride Study, Report to Congress,* Draft May 8, 1992, June 5, 1992. (436.4)

4. Memorandum, Subject: *OSC Report to the National Response Team Major Air Release of Hydrofluoric Acid Marathon Petroleum Company Texas City, Galveston County, Texas - October* 30 *to November* 7, 1987, From: Robert M. Ryan, On-Scene Coordinator, U.S. Environmental Protection Agency Region IV, To: National Response Team, March 4, 1988. (370)

5. Mason, R.J., Marathon Oil Company, comments on the draft *Chemical Emergency* Preparedness and Prevention Advisory on Hydrogen *Fluoride,* January 15, 1993. (82d)

6. HF's Future is Up in the Air," *Chemical Engineering,* May 1990, p 39. (150)

7. U.S. Environmental Protection Agency, *An SAB Report: Review of Hydrogen Fluoride Study: Report to Congress,* Science Advisory Board, Washington DC, December 1992. (489.89b)

ED_002700_00005500-00023

2. PROPERTIES AND HAZARDS OF HYDROGEN FLUORIDE

This chapter discusses the physical and chemical properties and hazards of both anhydrous and aqueous hydrogen fluoride, the potential health hazards posed by various routes of exposure, the behavior of HF upon release, and the potential environmental hazards that could result from a release.

2.1 Description of Physical and Chemical Properties

Hydrogen fluoride (HF) is a strong inorganic acid. It can be either a colorless, corrosive liquid or a colorless gas.' Anhydrous HF is miscible in water. HF in anhydrous form or in concentrated solution fumes strongly when in contact with moisture in the atmosphere, forming a white mist.[2,3] HF is commercially available in anhydrous form (without water) and aqueous form (in water solution). Aqueous HF is often called hydrofluoric acid. Anhydrous HF is normally produced with a purity of 99 to 99.9 percent; aqueous HF primarily is produced commercially as a 70 percent solution, although electronic and reagent grades of 5 to 52 percent are produced as well.[4] Both forms have a sharp, pungent odor;[5] the odor threshold is 0.04 pans per million (ppm).[6] A brief summary of selected chemical and physical properties of anhydrous and aqueous HF is presented in Exhibit 2-1.

EXHIBIT 2-1
Physical/Chemical Properties of Hydrogen Fluoride

Property	Anhydrous HF	Aqueous HF (70%)
Boiling point	19.54%	66.4%
Melting point	-83.55%	-69°C
Density at 25°C	0.9576 g/cm^3	1.22 g/cm^3
Solubility in water	complete	complete
Vapor pressure	922 mm Hg at 25°C	150 mm Hg at 25°C

Source: ***Kirk-Othmer Encyclopedia of Chemical Technology,*** **3rd ed., Vol. 10, 1980.**

Like other acids, aqueous HF is corrosive to a number of common industrial materials including iron, stainless steel, brass, glass, asbestos, concrete, and natural rubber. Aqueous HF corrodes steel and other metals at a high rate;' in these cases and others, specific materials of construction must be used. Carbon steels are commonly used for concentrations of aqueous HF 70 percent and higher, while chlorobutyl rubber-lined equipment can be used for aqueous solutions up to 70 percent.' Equipment commonly used in an HF atmosphere such as hoses, gaskets, tanks, valves, pipes, and pumps must be resistant to corrosion caused by HF.

HF is highly reactive, and in many cases, the reaction products are hazardous and may create dangerous situations. In a manner similar to other concentrated inorganic acids, HF reacts with sulfides and cyanides generating the toxic gases hydrogen sulfide and hydrogen cyanide, respectively. Reaction of HF with glass, concrete, and other silicon-bearing materials yields silicon

tetrafluoride gas, and reaction with a number of common metals, such as steel, yields flammable hydrogen gas (HF itself is nonflammable). Contact of HF with alkalies and some oxides can cause strong exothermic reactions. Adding relatively small amounts of water to either anhydrous HF or concentrated solutions of aqueous HF results in a violent reaction that produces heat and can cause spattering of the material; however, in large excess, water can be an effective mitigation agent because of heat absorbing properties, provided it is added promptly after the spill or releases.[9]

2.2 Health Hazards

Exposure to HF can cause injury through inhalation, direct contact, or ingestion." Repeated ingestion of HF can cause increased bone and joint density typical of fluorosis or chronic fluoride poisoning." Acute exposure to HF will result in irritation, burns, ulcerous lesions, and localized destruction of the tissues (necrosis) of the eyes, skin, and mucous membranes.[12] Concentrations of HF above 25 ppm in air can cause eye irritation; at 20 to 30 ppm, a reflex breathing difficulty is additional indication of the chemical's presence.[13] HF is not considered to be carcinogenic.[14]

While acute exposure to high concentrations of HF can cause severe health effects and even death, one study indicates that individuals surviving such exposures do not suffer long-term effects. The health of seven workers who survived exposure to high concentrations of HF (approximately 10,000 ppm) for several minutes in an industrial accident in Mexico was examined periodically for up to 11 years following the accident to evaluate any long-term effects. Long-term effects were defined as illnesses or lesions that do not show any immediate symptoms or signs, but instead appear after a period of time, ranging from months to years, after the exposure. The study looked for such effects as cancer, mutations, fluorosis, and neurological disorders. Although the effects of the exposure were life-threatening, no long-term delayed effects were observed. Particular attention was paid to possible long-term effects on the lungs from inhalation of high concentrations of HF; however, tests showed no changes in lung function of the workers studied, other than changes that would occur during normal aging.[15]

Another study, by the Galveston County Health District and the University of Texas Medical Branch, found indications of lingering disease symptoms, especially breathing problems, two years after exposure to HF during the Marathon Oil Refinery incident in Texas City on October 30, 1987. The Galveston study was based on a sample of 2,000 people, including all highly exposed individuals and some of the individuals with intermediate, negligible and unknown exposure levels. Subjects were interviewed once after the release as part of the exposure study and again for the symptom and disease prevalence study. The prevalence of severe symptoms two years after the release was significantly lower than it had been in the month after the release, but 24 percent of the highly exposed group still reported difficulty in breathing and sleep interruption due to headaches. Some still reported eye and skin irritations. As a group, the highly exposed individuals reported more bone symptoms, which are a known systemic effect of fluoride exposure, than their less exposed counterparts.[16]

Questions remain in the medical and industrial communities regarding the validity of the Galveston study. Lack of knowledge about the patients' prior medical histories to provide a medical baseline, disagreement regarding suitable definitions (e.g., severe exposure), and discrepancy over the causes of the eye and skin irritation are problems yet to be resolved. The actual exposure levels and duration are also not known. These were not documented at the time of the incident, and it is difficult to obtain reliable information from personal surveys taken two years after an incident."

ED_002700_00005500-00025

2.2.1 Inhalation

Inhalation of HF is particularly hazardous because HF readily dissolves in the mucous membranes of the upper respiratory tract, nose, and throat's Dose, a function of the length of time of exposure and the concentration to which one is exposed, is important in determining type and amount of tissue damage incurred. Mild exposure to HF vapor can cause respiratory system irritation. Respiratory exposure to high concentrations of HF characteristically results in disintegration of the tissues of the upper respiratory system (ulcerative tracheobronchitis) and accumulation of blood in the lungs (hemorrhagic pulmonary edema).[19] Symptoms may include coughing, choking, chills, chest tightness, fever, and bluish discoloration of the skin due to lack of oxygen in the blood (cyanosis). Severe exposure also can result in other systemic effects such as depletion of calcium levels (hypocalcemia), if not treated promptly.[20]

Various inhalation exposure guidelines, based primarily on health effects, have been developed for chemicals like HF that are considered to be health hazards Some of these guidelines are discussed in Appendix IV. These guidelines are intended to provide an exposure threshold; however, actual health effects will vary from individual to individual based on various factors such as age, health condition, etc. Exhibit 2-2 presents two guideline levels for HF, the Immediately Dangerous to Life or Health (IDLH) level developed by the National Institute for Occupational Safety and Health (NIOSH) and the Emergency Response Planning Guideline-3 (ERPG-3) developed by the American Industrial Hygiene Association (AIHA). Exhibit 2-2 also shows the IDLH and ERPG-3 for several common toxic substances for comparison. HF is clearly a chemical of concern, with an IDLH of 30 parts per million (ppm) for 30 minutes and an ERPG-3 of 50 ppm for 60 minutes. However, there are more toxic chemicals like phosgene and less toxic chemicals like ammonia.

For planning purposes, exposure guidelines, such as the IDLH and ERPG3, are sometimes used in conjunction with air dispersion modeling techniques to assess the potential consequences of a release of a toxic vapor. Dispersion models are used to develop estimates of the concentration of the vapor as a function of time, location, and distance from the point of release. The exposure guideline levels can be used as threshold concentrations or to determine dose levels to estimate areas in which people exposed to the toxic vapor might be expected to be at risk. The IDLH is defined for an exposure of 30 minutes, while the ERPG-3 is defined for an exposure time of 60 minutes, In cases where the duration of exposure might be expected to be significantly shorter or longer, these concentration levels might not be appropriate.

Another approach to estimating potential effects areas uses "probit" (probability unit) analysis, based on experimental animal lethality data, to estimate the percentages of humans affected as a function of concentration and time. The probit method is a useful tool; however, it is subject to the same uncertainties as other analytical methods that use toxicity data. The quantity and quality of experimental data available vary by chemical, making it difficult to compare toxicity. The experimental animal data upon which equation coefficients are based may vary between animal species, and the correlation between animal and human responses may vary greatly from substance to substance; therefore, there is likely to be uncertainty in applying probit equations. If animal data are not available over a wide range of exposure periods, the probit equation might be particularly uncertain when applied to exposures of much shorter or longer duration than the reported experimental exposure times, Several different probit equations have been developed for HF.[21,22,23,24] Depending on the equation chosen, different results can be obtained for a given concentration and exposure duration, As noted above, the IDLH and ERPG-3 are guideline concentration levels and are not intended to represent potentially lethal concentrations, The results of probit analysis based on several different equations are consistent with the definitions of these guideline levels, indicating that concentrations equal to the IDLH and ERPGS levels would not be sufficient to cause a one percent fatality rate in a population exposed for one hour. Probit equations for HF are discussed in more detail in Appendix V.

EXHIBIT 2-2
Exposure Guidelines For Several Toxic Substances
Compared to HF

Lower concentration indicates higher concern, greater toxicity; higher concentration indicates lower concern, lower toxicity.

Chemical Name	IDLH (30 minutes)	ERPG-3 (1 hour)
Phosgene	2 ppm (8 mg/m^3)	(4mg/m^3)
Sulfuric Acid	20 ppm (80 mg/m^3*)	7 ppm (30 mg/m^3*)
Hydrogen Fluoride	30 ppm (25 mg/m3)	50 ppm (41 mg/m^3)
Chlorine	30 ppm (87 mg/m^3)	20 ppm (58 mg/m^3)
Hydrogen Chloride	100 ppm (149 mg/m^3)	100 ppm (149 mg/m^3
Sulfur Dioxide	100 ppm (262 mg/m^3)	15 ppm (39 mg/m^3)
Ammonia	500 ppm (348 mg/m^3)	1000 ppm (695 mg/m^3)

- **IDLH.** The Immediately Dangerous to Life or Health (IDLH) level, developed by the National Institute for Occupational Safety and Health (NIOSH), represents the maximum concentration from which one could escape within 30 minutes without any escape-impairing symptoms or any irreversible health effects. (See the NIOSH Pocket Guide to Chemical Hazards)

- **ERPG.** Emergency Response Planning Guidelines (ERPGs) have been developed for a limited number of chemicals by the American Industrial Hygiene Association (AIHA). The ERPGs are based primarily on acute toxicity data and possible long-term effects from short-term exposure.

  The **ERPG-3** is defined as the maximum concentration in air below which nearly all people could be exposed for one hour without life-threatening health effects.

* Normally listed in mg/m^3 rather than ppm. The likelihood of sulfuric acid vapor exposure is low due to very low vapor **pressure. Exposure levels are expressed in mg/m^3 to account for the more likely acid mist (particulate) exposure route,**

Sources: National Institute for Occupational Safety and Health
American Industrial Hygiene Association

ED_002700_00005500-00027

2.2.2 Contact with Skin and Eyes

Liquid HF can severely burn skin and eyes. Anhydrous HF gas or the fumes from concentrated aqueous HF can also burn these tissues. Like many other acids, liquid HF should initially be diluted and rinsed from the skin surface with large quantities of water. However, additional treatment is needed for direct contact by large amounts of concentrated HF because it may penetrate the skin and tissue until it is neutralized by reaction with calcium available in blood and body tissue or a medically-introduced subcutaneous source of calcium.[26] Industry experience regarding minor exposure to HF vapor has been that a "mild" sunburn effect may develop on exposed skin."

Skin contact with anhydrous HF or solutions above 50 percent produce immediate pain and tissue damage; exposure to solutions of 20 to 50 percent HF results in pain and reddening of the skin that may be delayed one to eight hours, while reactions to more dilute solutions may be delayed up to 24 hours.[28,29] The fluoride ion can penetrate skin and attack underlying tissues and bone. The pain is said to be excruciating and unusually persistent. Healing often is delayed, and tissue destruction (necrotic changes) may continue to occur beneath a layer of tough coagulated tissue to produce deep penetrating ulcers. Hypocalcemia and other systemic effects can result from large burns (over 25 square inches), and these effects may be fatal if proper medical treatment is not obtained.[31]

Both liquid and gaseous HF can cause severe imitation and deep-seated burns on contact with eyes or lids.[32] Corneal burns and conjunctivitis are common symptoms of exposure. If not treated immediately, permanent damage or blindness may result from direct contact.[33,34] Solutions as dilute as 2 percent or lower may cause skin burns or eye irritation.[35]

2.2.3 Ingestion

If ingested, HF can cause immediate and severe mouth, throat, and stomach burns.[36] Even small amounts and dilute solutions can lead to fatal hypocalcemia unless medical treatment is initiated.[37]

2.2.4 Recommended Medical Treatments

Burns resulting from HF contact with skin, eyes, or mucous membranes require immediate and specialized first aid and medical treatment from trained personnel. This treatment differs from the treatment of burns from other acids. If untreated or improperly treated, permanent damage, disability, or death may result. Treatment may involve introducing an agent to react with the fluoride ion and prevent further or continuing tissue destruction. For skin contact, Du Pont, a major manufacturer of HF, recommends five minutes of flushing followed by calcium gluconate treatment applied as a gel or injection of a 5 percent solution.[38] Calcium gluconate complexes with the fluoride ion to form an insoluble product. Another form of treatment, as recommended by Allied-Signal, another major manufacturer of HF, is prolonged soaking in quaternary ammonium compound solution.[39] Treatment by quaternary ammonium compounds has been recommended for topical dermal treatment, but treatment by topical calcium gluconate gel is most commonly used. Calcium gluconate may be injected or given intravenously to treat more extensive dermal exposures.[40] If HF is ingested, the stomach may need to be lavaged with lime water. Severe exposure to HF by any route can lower serum calcium levels (hypocalcemia) and can be treated intravenously with calcium gluconate.[41,42] Recommended first aid treatment of exposure to HF by inhalation is similar to the treatment recommended for many other toxic gases and vapors. First aid recommendations include immediately moving the victim to fresh air and getting medical attention; keeping the victim warm, quiet, and lying down; starting artificial respiration if breathing has stopped; and having oxygen administered by a trained attendant.[43] Promptness in administering treatment for exposure to HF is crucial. The medical treatment recommended by Allied-Signal is presented in Appendix VI as an

example of the approach one company has taken to address the special concerns associated with the treatment of HF exposures. Elf Atochem, also a manufacturer of HF, has contracted with a nationally prominent Poison Control Center to provide occupational health consultation following HF exposure incidents. This allows attending physicians to have instant access to specialized treatment protocols.[44]

2.3 Environmental Hazards

HF may be toxic to aquatic and terrestrial life, with the effect depending on the exposure concentration, If HF was released to the environment in sufficient concentrations, the fluoride ions in the water could be toxic to surrounding plants and animals, while airborne HF in a vapor cloud could burn both plant and animal tissue. Whether released to water, air, or land, HF does not biodegrade. Calcium present in large enough quantities in soil or water will form an insoluble solid with the fluoride ion, removing it as an immediate environmental hazard. Dilution or natural buffering capacities of soils or water will reduce the increased acidity created by the release of HF.

HF is highly soluble in water. Fluoride ions, readily available in aqueous HF, were found to be lethal to fresh water fish at 60 milligrams per liter (mg/L). Fluoride ions are harmful to many other species of fish at concentrations of 40 mg/L and below. Other more sensitive aquatic life are affected at levels as low as 10 mg/L. An aquatic toxicity rating for HF has not been assigned. According to a Canadian study, concentrations of fluoride equal to or exceeding 1.5 mg/L constitute a hazard in the marine environment, while levels less than 0.5 mg/L present minimal risk of deleterious effects.[45]

It should also be noted that fluoride is added to drinking water to help prevent tooth decay .[46] The Centers for Disease Control (CDC) recommend that communities fluoridate their drinking water systems at the optimum fluoride level, i.e., the level that results in the least staining and/or pitting of developing teeth (dental fluorosis) and the maximum reduction in dental decay. The CDC have defined the optimum fluoride level in drinking water as 0.7 mg/L to 1.2 mg/L. EPA's standard is different from the CDC recommendation because EPA standards are based on health effects, and the Agency considers dental fluorosis to be a cosmetic effect, not an adverse health effect. Excessive amounts of fluoride can also lead to crippling skeletal fluorosis, however, which is a health effect[47] To reduce the risk of skeletal fluorosis, EPA has established a maximum contaminant level (MCL) for fluoride in drinking water at 4.0 mg/L. EPA set a Secondary Maximum Contaminant Level (SMCL) at 2.0 mg/L to protect against dental fluorosis. The MCL is an enforceable standard that requires a system to install one of the identified best technologies generally available, while the SMCL is a nonenforceable goal that requires a system that exceeds the level to give public notification.[48]

Gaseous HF can directly attack plant foliage, especially if present in high concentrations. In low concentrations, HF is absorbed by the leaves. The most apparent effect of fluoride on vegetation is necrosis or tip burn, but exposure to fluoride in sufficient quantities also may result in growth abnormalities or a decrease in reproductivity in both plants and animals. Livestock that drink fluoride-contaminated water or eat contaminated foliage may have dental lesions, bone overgrowth, lameness, loss of appetite, a decrease in milk production, and reduced reproductivity.[49]

2.4 Release Characteristics

The behavior of HF in the event of a release depends on a variety of factors, including the conditions of the release and the atmospheric conditions. If HF is superheated and released under pressure, it will form a cloud of HF vapor and aerosol, which reacts readily with water vapor in the air. If HF vapor is released directly or vaporizes from a liquid pool, a visible cloud is often formed because of the reaction with moisture in the air. Anhydrous HF can be released as a vapor or as a combination of vapor and liquid droplets. HF spilled as a liquid will evaporate at a rate that depends

ED_002700_00005500-00029

on release temperature and atmospheric conditions. HF will vaporize quickly from a pool for the first few minutes as heat is conductively transferred to the pool surface. The pool temperature will drop as HF vaporizes causing a corresponding decrease in evaporation rate.[50] Aqueous HF can also be released from various operations and depending upon release temperature and concentration, can vaporize and form dense white fumes.

Anhydrous HF boils at approximately 20°C and is very soluble in water. Because of its volatility and low boiling point, it can be readily vaporized to form a vapor cloud. Both anhydrous HF and aqueous HF with a concentration greater than about 40 percent will react with the moisture in air to produce white fumes.[51] This reaction with moisture produces heat (exothermic reaction). The fumes have a pungent odor and are extremely irritating if inhaled or contacted.[52] Depending on the size of the vapor cloud and prevailing meteorological conditions, an HF release could pose a severe hazard to facility personnel and the nearby public. The visibility of the white fumes can permit a process operator to detect small leaks and spills quickly and take action to prevent them from worsening;[53] unfortunately, HF fumes cannot easily be differentiated visually from common steam leaks.

Molecules of HF liquid and gas form hydrogen bonds (i.e., the hydrogen atom in one HF molecule forms a bond with the fluorine atom in another HF molecule) to produce variable length chains or polymers up to (HF), at ambient temperatures. At higher temperatures, however, single HF molecules may exist. HF liquid consists primarily of HF hexamer $(HF)^6$. The properties of HF vary from what might be expected because of the hydrogen bonding; the density of HF vapor is greater than would be expected, and HF is likely to form vapor clouds that are heavier than air (i.e., it behaves as a dense gas) and travel at ground level following a release, experiencing both gravity spreading and turbulent flow. As the dense gas cloud mixes with air, the HF dissociates to the HF monomer, a process that absorbs heat (endothermic reaction) and cools the cloud. Evaporation of droplets of HF aerosol in the cloud (see below) also contributes to cooling effects. The cooling of the cloud increases its density. As moist air is mixed into the cloud, HF reacts with the moisture to form aqueous HF, releasing heat, warming the cloud, increasing its buoyancy, and decreasing its density. Thus, these processes can lead to a cloud that can be either neutrally or positively buoyant (i.e., the same density as air or lighter than air) depending on atmospheric conditions such as temperature and humidity of the air and the rate of mixing between air and the HF cloud itself. Eventually, the cloud becomes buoyant, dispersing vertically as well as horizontally in the atmosphere.[54,55]

An HF release may, under certain conditions (i.e., superheated and released under pressure), lead to aerosol formation which is a suspension of fine liquid particles in a vapor cloud. Based on spill tests, a release of gas liquefied under pressure could form a cloud containing both HF vapor and HF aerosol.[56] Because liquid particles are airborne, aerosol formation adds greatly to the quantity of HF contained in the cloud and thus adds to the hazards posed to workers and to the public. Aerosol formation is not unique to HF. It depends both on the chemical and on the conditions of the release. For example, any gas liquefied under pressure, which flashes to a gas upon release, may carry liquid with it as a fine spray or aerosol. The aerosolization properties of HF, H^2SO^4, and ammonia (NH,) have been investigated in periodic spill test studies[57,58] Similar to HF, releases of liquefied NH, under pressure have resulted in clouds containing as much as 80 percent aerosol droplets of NH_3.[59] Spill tests for aerosol formation of sulfuric acid and sulfuric acid/isobutane mixtures have been conducted, with test results indicating that a release of sulfuric acid under typical petroleum refinery alkylation conditions would not form an aerosol.[60]

During the summer of 1986, Amoco Oil Company and Lawrence Livermore National Laboratory conducted a series of six experiments involving atmospheric releases of HF. The studies, known as the Goldfish test series, were conducted at the Department of Energy Liquefied Gaseous Fuels Spill Test Facility in Frenchman's Flats, Nevada. In these tests, HF was released at a temperature of 40°C and a pressure of 110 to 120 pounds per square inch (psi[61] (conditions approximating petroleum

refinery HF alkylation unit operating parameters). Upon release, the HF formed a cloud of vapor (approximately 20 percent of the HF) and HF/water vapor aerosol (approximately 80 percent of the HF) which traveled downwind as a dense gas.[62] The tests were conducted under desert conditions; therefore, the heat effects caused by reaction of HF with moisture in the air were probably smaller than they would be in locations with higher humidity. In an area of higher humidity, the cloud may be heated more because of the reaction of HF with moisture in the air; additional water, however, reduces the volatility of the HF/water droplets which tends to keep the cloud dense longer.[63]

ED_002700_00005500-00031

ENDNOTES

1. Crowl, Daniel A., Wayne State University, comments from technical review of Hydrogen *Fluoride Study, Report to Congress,* Draft May 8, 1992, May 27, 1992. (133.3)

2. Mark, Herman F., Donald F. Othmer, Charles G. Overberger, and Glenn T. Seaborg, eds., Kirk-*Othmer Encyclopedia* of Chemical Technology, Third Edition, Volume 10, John Wiley and Sons, New York, 1980. (285)

3. Du Pont Chemicals, *Hydrofluoric Acid, Anhydrous - Technical: Properties, Uses, Storage and Handling, Wilmington, DE.* (137.5)

4. Du Pont Chemicals, *Material Safety Data Sheet (MSDS), Hydrofluoric Acid - Anhydrous,* Wilmington, DE, June 1991. (138)

5. Allied Signal, information from fact sheets.

6. U.S. Environmental Protection Agency, *Reference Guide to Odor Thresholds for Hazardous Air Pollutants Listed in the Clean Air Act Amendments of 1990,* Air Risk Information Support Center, Washington, DC, Document Number: EPA/600/R-92/047, March 1992. (139.54)

7. Du Pont Chemicals, *Hydrofluoric Acid, Anhydrous.*

8. Seringer, Carolyn S., Du Pont Chemicals, comments from technical review of *Hydrogen Fluoride Study, Report to Congress,* Draft May 8, 1992, June 5, 1992. (436.4)

9. Hague, William J., Allied-Signal, comments from technical review of *Hydrogen Fluoride Study, Report to Congress,* Draft May 8, 1992, June 10, 1992. (153)

10. Mark, Herman F.

11. Gosselin, R.E., R.P. Smith, H.C. Hodge, and J.E. Braddock, *Clinical Toxicology of Commercial Products,* Williams & Wilkins, Baltimore, 1987, pp 190-193. (145)

12. U.S. Environmental Protection Agency, *EPA Chemical Profiles for Extremely Hazardous Substances,* Emergency First Aid Treatment Guide for Hydrogen Fluoride, 1987. (139.5)

13. Phillips Petroleum Company, comments from technical review of *Hydrogen Fluoride Study, Report* to *Congress,* Draft May 8, 1992. (370.92)

14. Allied Signal, information from fact sheets.

15. Trevino, Miguel A., *Hydrofluoric Acid Exposures Long-Term Effects,* October 1991 Draft. (485)

16. Galveston County Health District and University of Texas Medical Branch, *Hydrofluoric Acid Spill Report of the Exposure and Symptom and Disease Prevalence Studies,* Agency for Toxic Substances and Disease Registry, U.S. Department of Health and Human Services, Texas City, TX, December 3, 1991. (140.5)

17. Hague, William J., Allied-Signal.

18. Mudan, Krishna S., *Acute inhalation Toxicity of Hydrogen Fluoride,* AIChE Summer Annual Meeting, Philadelphia, August 24-26, 1989. (360)

19. Gosselin, R.E.

20. Allied Signal, information from fact sheets.

21. Mudan, Krishna S.

22. Perry, W.W., and W.P. Atticola, *Study to Modify the Vulnerability Model of the Risk Management System,* Prepared for US. Department of Transportation, U.S. Coast Guard, Washington, D.C., 1980, No. CG-D-22-80 (489.91)

23. de Weger, D.E., C.M. Pieterson, and P.G.J. Reuzel, "Consequences of Exposure to Toxic Gases Following Industrial Disasters,' *Journal of Loss Prevention in the Process Industries,* Vol. 4, 1991 (July), p 272. (502)

24. ten Berge, W.F., A. Zwart, and L.M. Appelman, "Concentration-Time Mortality Response Relationship of Irritant and Systematically Acting Vapours and Gases," *Journal of Hazardous Materials,* Vol. 13, 1986, p 301. (54.5)

25. Allied Signal, information from fact sheets.

26. Phillips Petroleum Company.

27. Phillips Petroleum Company.

28. National Library of Medicine (NLM), Hazardous Substances Databank (HSDB), on-line database, July 1992. (361.3)

29. Hague, William J., Allied-Signal.

30. Gosselin, R.E.

31. Allied Signal, information from fact sheets.

32. Joseph, Eileen Zola, ed., *Chemical* Safety *Data Guide,* The Bureau of National Affairs, Washington, DC, 1985, pp 475-476.

33. Joseph, Eileen Zola.

34. U.S. Environmental Protection Agency, *EPA Chemical Profiles for Extremely Hazardous Substances.*

35. Allied Signal, information from fact sheets,

38. Joseph, Eileen Zola.

37. Allied Signal, information from fact sheets.

38. Seringer, Carolyn S., Du Pont Chemicals.

39. Hague, William J., Allied-Signal.

ED_002700_00005500-00033

40. Rodgers, George C., University of Louisville, comments from technical review of *Hydrogen Fluoride Study, Report to Congress,* Draft May 8, 1992, June 5, 1992. (424.9)

41. Allied Signal, information from fact sheets.

42. Rodgers, George C., University of Louisville.

43. Allied Signal, information from fact sheets.

44. Laumer, John and Harold Lamb, Elf Atochem North America Inc., comments from technical review of *Hydrogen Fluoride Study, Report to Congress,* Draft May 8, 1992, June 4, 1992. (290.8)

45. Environment Canada Environmental Protection Service, *Hydrogen Fluoride and Hydrofluoric Acid, Environmental and Technical Information for Problem Spills,* Technical Services Branch, Ottawa, Ontario, July 1984. (220)

46. U.S. Environmental Protection Agency, *Fluoride Synopsis,* Office of Ground Water and Drinking Water, Drinking Water Standards Division, Washington, DC., July 22, 1992. (139.4)

47. U.S. Environmental Protection Agency, *Fluoride Synopsis.*

48. U.S. Environmental Protection Agency, 'National Primary and Secondary Drinking Water Regulations; Fluoride," 40 *CFR Parts* 747-743, {Volume 51, Number 63, "Rules and Regulations: Part II}, April 2, 1986. (139.57)

49. Environment Canada Environmental Protection Service.

50. Hague, William J., Allied-Signal.

51. Los Angeles County, Department of Health Services, Toxics Epidemiology Program, *Health Effects Due to Hydrogen Fluoride Inhalation: A Literature Review,* 1989. Prepared for the Hydrogen Fluoride Task Force of the South Coast Air Quality Management District. (325)

52. Allied Signal, information from fact sheets.

53. Du Pont Chemicals, *Hydrofluoric Acid, Anhydrous.*

54. Seringer, Carolyn S., Du Pont Chemicals.

55. Phillips Petroleum Company.

56. *HF Mitigation Wafer Spray Project,* created for a meeting of the American Petroleum Institute and given to the U.S. Environmental Protection Agency, December 10, 1991, (424.34ABC)

57. *Model Study of Sulfuric Acid Aerosol Formation for Phillips Petroleum Company.* Prepared by Quest Consultants inc., Norman, Oklahoma. (340)

58. *HF Mitigation Water Spray Project.*

59. Kaiser, Geoffrey D., "A Review of Models for Predicting the Dispersion of Ammonia in the Atmosphere," *Plant/Operations Progress,* AIChE, Volume 8, Number 1, January 1989, p 58-64. (284.3)

60. Quest Consultants, Inc., *Sulfuric Acid Aerosoling,* Norman, Oklahoma, October 12, 1992. Document Number: 92-1 0-6065. (395)

61. Blewitt, D.N., J.F. Yohn, R.P. Koopman, and T.C. Brown, "Conduct of Anhydrous Hydrofluoric Acid Spill Experiments,' International Conference on Vapor Cloud Modeling. (60)

62. Blewitt, D.N.

63. Koopman, Ronald P., Lawrence Livermore National Laboratory, comments from technical review of *Hydrogen Fluoride Study, Report to Congress,* Draft May 8, 1992, June 3, 1992. (289)

ED_002700_00005500-00035

3. CHARACTERIZATION OF HYDROGEN FLUORIDE INDUSTRY

This chapter provides a brief overview and characterization of the industries that produce and use HF, including production and use data and a brief discussion of the market outlook for HF. The quantities of HF produced or used by various industry segments should provide some perspective for considering the discussion of hazards in subsequent chapters.

3.1 Production of HF

U.S. total annual capacity for HF production was estimated to be approximately 206,000 tons as of April 15, 1992, while non-U.S. North American capacity was approximately 103,000 tons as of mid-l 991.[1] The HF industry has been operating at about 90 percent of capacity. Additionally, three North American aluminum producers make 60,000 tons of HF gas annually for their own on-site use.' Exhibit 3-1 presents U.S. producers of HF for the commercial market. Exhibit 3-2 lists other North American producers. HF produced by the aluminum producers is not included in these exhibits because the HF is not stored or available for the commercial market. It is produced as a result of the aluminum manufacturing process and then used immediately on-site.

North American production is divided between Allied-Signal Inc., E.I. du Pont de Nemours & Co., Elf Atochem North America, Inc., and a series of Mexican producers.[3] Allied-Signal Inc. is the largest HF producer in North America with capacity of 105,000 tons at its Geismar, Louisiana plant. Du Pont is the second largest producer with a 75,000 ton plant in La Porte, Texas. Elf Atochem North America, Inc. has a 26,000 ton plant in Calvert City, Kentucky.[4] The Calvert City plant, which formerly belonged to Pennwalt Corporation, was merged into Elf Atochem in 1990.[5] The vast majority of HF produced at Calvert City is used captively to produce a variety of fluorochemicals and fluoropolymers. A small amount of hydrogen fluoride enters the merchant market.[6] Alcoa of the U.S., Alcan of Canada (Canadian producer has since ceased production), and Industrias Quimicas de Mexico produce and use 60,000 tons of HF gas captively as an intermediate in producing aluminum fluoride for aluminum production.'

Western Europe and Japan also produce significant quantities of HF. Japan alone, for example, has seven companies that have combined production capacities of 97,900 tons as of 1988, while annual production capacity for Western Europe as a whole was 386,100 tons as of January 1, 1990.[8] France is the largest producer in Western Europe with 105,000 tons, followed by Germany with 93,500 tons, and the United Kingdom with 79,200 tons. Italy, Spain, Greece and the Netherlands also contributed to the Western European total stated above. Other countries, such as Finland and Sweden, produced less than 11,000 tons annually in the late 1980's. Trade data indicate that the following countries exported less than 9,900 tons annually from 1987-1990: Switzerland, the Netherlands, United Kingdom, Portugal, Belgium, Luxembourg, South Korea, Irish Republic, Denmark, Austria, Malaysia Federation, Taiwan, and Norway.'

Imports of HF to the United States rose from 98,100 tons in 1980 to 130,000 tons in 1989, according to U.S. Department of Commerce data.[10,11] Imports for 1991 totaled 104,900 tons. Of this total, the U.S. received 71,100 tons (68 percent) from Mexico, 18,700 tons (18 percent) from Canada (Canadian producer has since ceased production), 9,800 tons (9 percent) from Kenya, 4,200 (4 percent) from China and about 1 percent from four other countries.[12,13] (NOTE: The quantities listed for Kenya and China may reflect imports of fluorspar.)[14]

In 1991, the U.S. exported approximately 9,000 tons of HF. Of this total, about 3,700 tons (42 percent) were exported to Canada, 3,100 tons (34 percent) were exported to Mexico, 1 ,100 (13 percent) to Venezuela, 226 (3 percent) to Taiwan, 200 (2 percent) to South Korea, and less than 105

ED_002700_00005500-00036

tons each (1 percent or less) to 24 other countries.[15] Data regarding imports and exports of individual HF producers were not found in the available literature.

EXHIBIT 3-1
U.S. HF Production Capacity for 1992

Manufacturers (Primary producers)	Site Location	Annual Capacity (Thousands)
Allied-Signal Inc. Engineered Materials Sector	Geismar, LA	105
Du Pont Company Du Pont Chemicals	La Porte, TX	75
Elf Atochem North America, Inc. Fluorine Chemicals Division	Calvert City, KY	26
	TOTAL	206

Source: SRI International estimates as of April 15, 1992.

EXHIBIT 3-2
Non-U.S. North American HF Producers and Shippers

Company	Site Location	Annual Capacity (thousands of tons)
Fluorex	Ciudad Juarez, Mexico	20
industrias Quimicas de Mexico	San Luis Potosi, Mexico	11
Quimica Fluor	Matamoros, Mexico	66
Quimibasicos	Monterey, Mexico	6
	TOTAL	103

Note: Alcoa (U.S.), Alcan (Canada), and Industrias Quimicas de Mexico produce 60,000 tons of HF gas annually for captive use in the production of aluminum fluoride for aluminum production. In addition, according to the **Chemical Manufacturers Association HF Panel's comments on the Draft HF** Report, June 5, 1992, another small Mexican company, Campanera Minera LaValenoiana (CMV) in Torreon, Mexico, appears to be producing HF, with an annual production capacity of 6,000 tons.

Source: SRI International estimate as of mid-1991,

ED_002700_00005500-00037

3.2 Uses of HF

HF is the source of fluorine for most fluorine-containing chemicals. It is either used directly in the manufacture of such chemicals or in the production of intermediates for their manufacture. HF is used to manufacture a wide variety of products, including refrigerants, gasoline, electronic components, aluminum, and plastics.[16] HF is used as a reactant or fluorinating source in the manufacture of fabric and fiber treating agents, herbicides, pharmaceutical intermediates, inert fluorinated liquids, and electronic grade etchants.[17] Stannous fluoride, used in toothpaste, is manufactured using HF. HF lasers have been tested for use in corneal transplants[18] and for use in space.[19]While the majority of HF used by industry is in the anhydrous or 100 percent form, aqueous HF solutions with concentrations of 70 percent and lower are used in stainless steel pickling, metal coatings, chemical milling, glass etching, exotic metals extraction, and quartz purification.[20] See Exhibit 3-3 for some examples of uses of HF.

Under section 313 of the Emergency Planning and Community Right-to-Know Act (Title III of the Superfund Amendments and Reauthorization Act of 1986) facilities manufacturing, processing, or otherwise using HF must report to EPA's Toxic Release Inventory (TRI) if the quantity of HF manufactured, processed, or used annually exceeds an established threshold. Facilities must report the quantities of both routine and accidental releases of listed TRI chemicals as well as the amount contained in wastes transferred off-site. The TRI reports exclude all non-manufacturing facilities and those manufacturers with fewer than 10 employees. In 1990, when the threshold for manufacturing or processing was 25,000 pounds and the threshold for otherwise using was 10,000 pounds, a total of 531 facilities reported to the TRI for HF. These facilities represented a variety of industries, and included Government facilities (e.g., Department of Energy facilities). Facilities in the chemical, primary metals, fabricated metals, and electronic equipment industries each made up about 18 to 20 percent of the total. Petroleum refiners accounted for 11 percent. Other facilities reporting included a number in the transportation equipment industry and stone, glass, clay, and concrete industries. Exhibit 3-4 presents the types of facilities reporting to TRI. Many of these facilities, particularly those in the metals and electronics industries, probably use aqueous rather than anhydrous HF. Many also report relatively small maximum on-site quantities. About 80 percent of the facilities reported maximum on-site quantities of less than 100,000 pounds. Facilities reporting 100,000 pounds or more were primarily chemical companies and refiners; some primary metal companies and others also reported quantities of 100,000 pounds or more. Exhibit 34 shows the distribution of facilities reporting maximum on-site quantities of 100,000 pounds or more.

According to the 1990 TRI data, the total of annual quantities of HF emitted, both accidentally and routinely, to the environment or waste transferred from reporting facilities was about 12,660,000 pounds (6,330 tons). Appendix VII lists all facilities reporting to the TRI for HF in 1990, with maximum on-site quantity ranges and quantities released. The released quantities reported include fugitive or point emissions to air, discharges to receiving streams or water bodies, underground injection on-site, releases to land on-site, discharges to POTW, and other transfers in waste to off-site locations.

In 1991, HF end uses were as follows (see Exhibit 3-5):

- 63 percent (152,000 tons) as fluorocarbons,
- 7 percent (16,000 tons) as alkylation catalyst for gasoline,
- 5 percent (13,000 tons) for nuclear applications (uranium),
- 3 percent (8,000 tons) purchased on the merchant market consumed in the aluminum industry to produce aluminum fluoride,
- 22 percent (52,000 tons) in stainless steel pickling, various chemical derivatives and products, electronics, specialty metal production, and other uses[21]

ED_002700_00005500-00038

EXHIBIT 3-3
Examples of Hydrogen Fluoride Uses

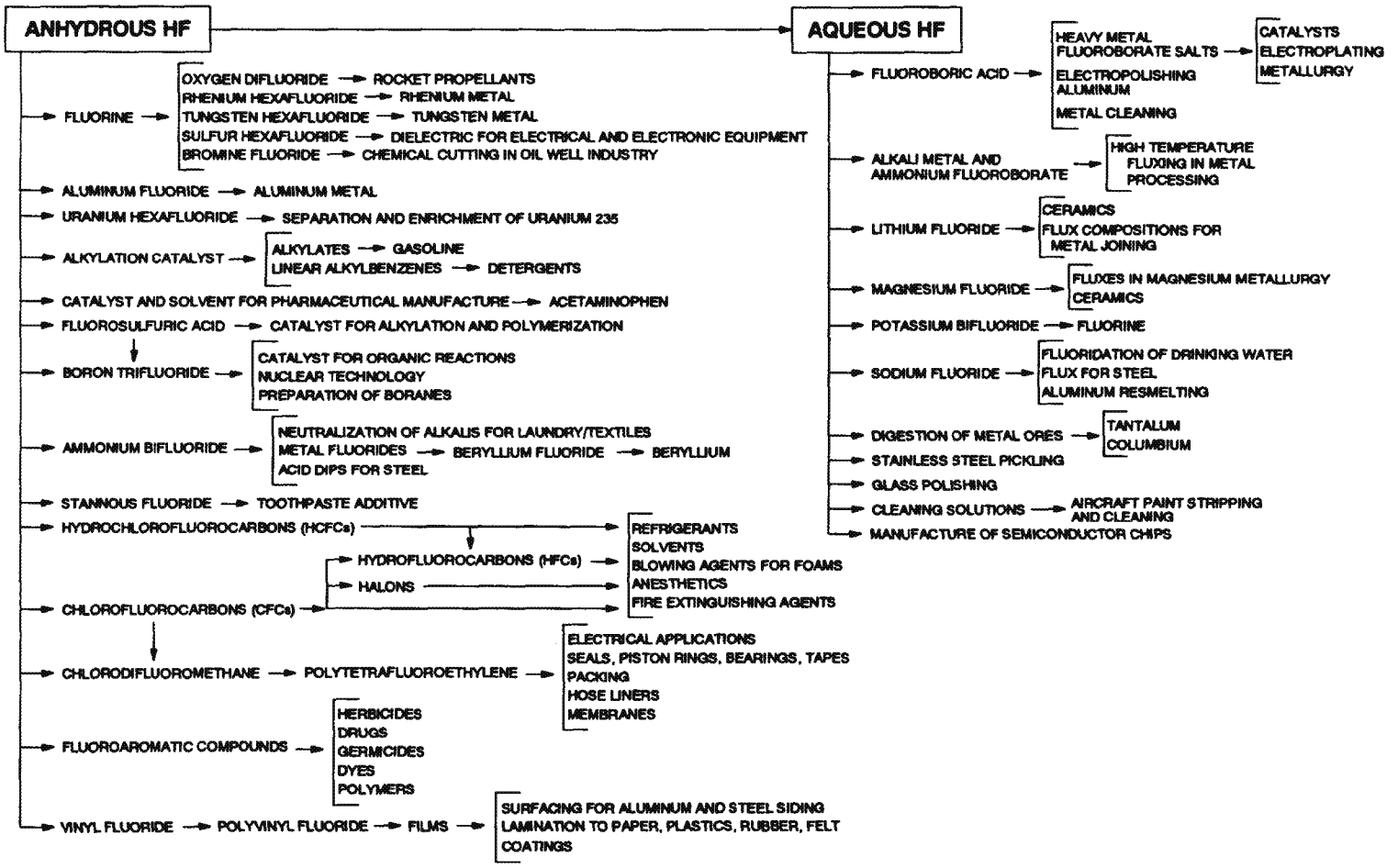

SOURCES: Based on SRI, *Chemical Origins and Markets*, Chemical Information Services, Stanford Research Institute, Menlo Park, CA, 1977, and *Kirk-Othmer Encyclopedia of Chemical Technology*, Vols. 10-11, John Wiley and Sons, New York, 1980.

ED_002700_00005500-00039

EXHIBIT 3-4
Types of Facilities Reporting to TRI for Hydrogen Fluoride

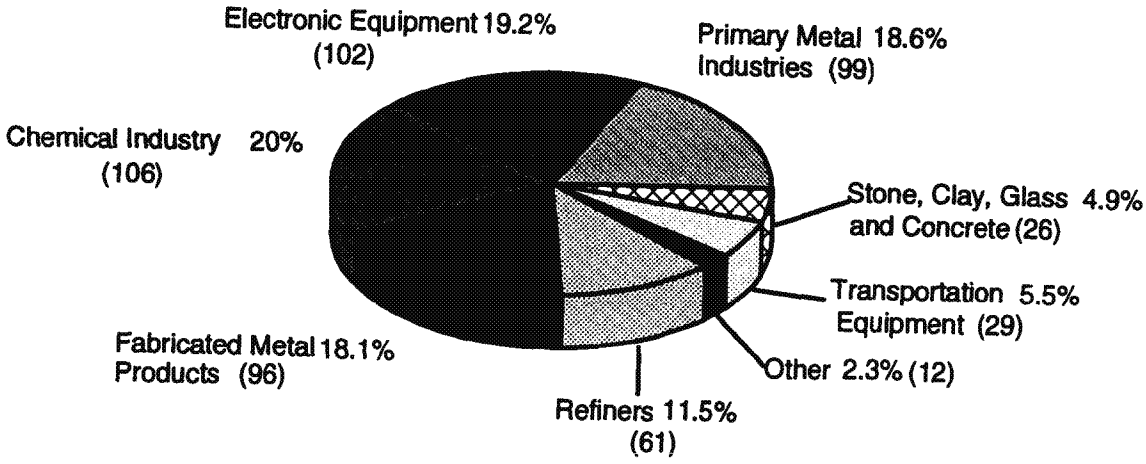

All Facilities
(Total: 531)

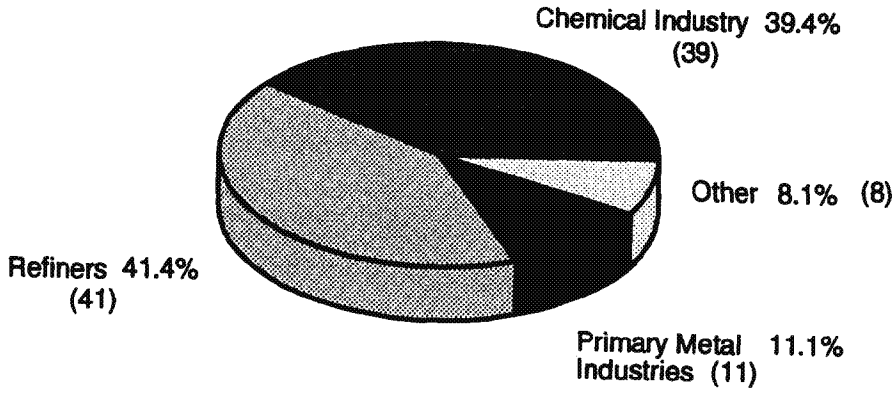

Facilities Reporting Maximum Quantities
On Site of 100,000 Pounds or More
(Total: 99)

Source: 1990 TRI Data.

ED_002700_00005500-00040

EXHIBIT 3-5
End Uses of Hydrogen Fluoride

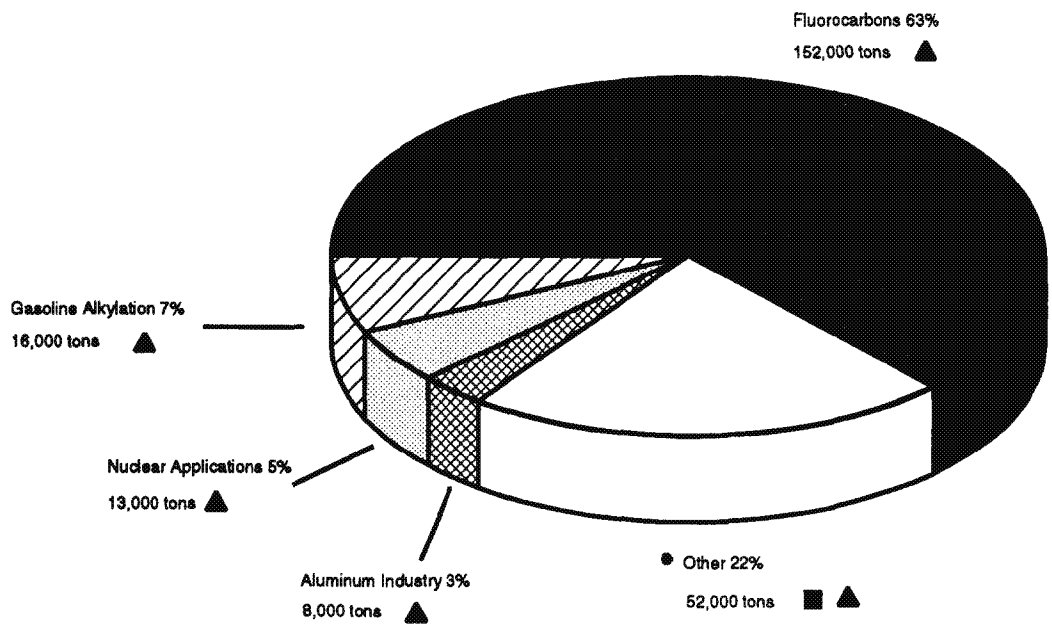

■ Aqueous Forms (basis: 100% weight HF)

▲ Anhydrous Forms

● End uses include stainless steel pickling, chemical milling, glass etching ore extraction, quartz purification, metal coatings, fabric and fiber treating agents, herbicides, pharmaceutical intermediates, and inert fluorinated liquids.

Source: Will, Ray, R. Willhalm, and S. Mori, Chemical Economics Handbook Product Review: Fluorine Compounds, Preliminary Draft, SRI International, Menlo Park, CA, May 20, 1992, p 53. (102)

In addition to the 8,000 tons of merchant HF consumed by the aluminum industry, between 53,000 and 67,000 tons of HF are produced and captively converted to various fluorides by aluminum producers.[22]

The largest market for anhydrous HF (historically about two thirds)[23] is in the production of fluorocarbons and related substances, especially chlorofluorocarbons (CFCs).[24] HF is a source of fluorine in the manufacture of fluorocarbons and CFCs which are used as refrigerants, solvents, sources of raw material for production of fluoro-plastics, anesthetics, and fire extinguishing agents.[25] The production of CFCs is being cut back, however, because of the damage these molecules cause

ED_002700_00005500-00041

to the ozone layer. Many fluorocarbon replacements for CFCs themselves contribute to the depletion of ozone, although at a slower rate than CFCs. Therefore, these replacements will also be phased out during the next 30 to 40 years.[26]

Appendix VIII provides a list of CFC and fluorocarbon manufacturers and also contains a few examples of other chemicals that are produced from HF (including both anhydrous and aqueous HF).

HF is also used as an alkylation catalyst in the petroleum refining industry to produce gasoline blending components, In 1991, 16,000 tons of HF were consumed in alkylation catalysis in the U.S.[27] The refineries in the US. and Canada which use HF for alkylation are identified in Appendix IX. Appendix IX also includes the type of HF alkylation process (Phillips or UOP) used at each refinery; these processes are described in Chapter 5. Alkylate production capacity for U.S. refineries using HF is 520,600 barrels per stream-day.[26] Currently, HF alkylation processes produce about 46 percent of the alkylate produced in the United States: the remaining 52 percent is produced using sulfuric acid.[29] Clean Air Act Amendments (CAAA) regulations will mandate gasoline reformulation to reduce motor vehicle emissions during the 1990s. Alkylate production, a critical component of gasoline reformulation and of cleaner burning fuels, may be important in meeting CAAA regulations. Exhibit 3-6 presents an overview of the geographical distribution of major producers and users of HF in the U.S. Chapter 5 provides information on the processes used by HF producers and the major users of HF.

3.3 Market Outlook

The future of the HF market depends primarily on the CFC and fluorocarbon markets. The Montreal Protocol, signed in 1987 by the United States and 22 other countries, is a treaty that froze production and consumption levels of CFCs at 1986 levels, beginning in 1989. One of the requirements of the 1990 London Amendments to the treaty is that CFCs are to be completely phased out by January 1, 2000. In the U.S., the 1990 CAAA fulfilled and in some cases surpassed the requirements of the London Amendments. The U.S. phaseout schedule has been further accelerated by President Bush's announcement that CFCs would be banned by 1995. The CAAA also require recapture of CFCs and HCFCs when refrigeration equipment is serviced or scrapped, warning labels on products containing CFCs or halons, and restricting sales of recharge canisters of refrigerant to certified, trained mechanics.

Hydrochlorofluorocarbons (HCFCs) are identified in the Montreal Protocol in **a** non-binding agreement as the major interim substitutes for CFCs because they add less chlorine to the stratosphere and therefore cause less destruction of the ozone layer, than fully halogenated CFCs.[30] Although HCFCs use an average of about three times as much HF in their production as CFCs, the demand for HF to produce HCFCs is expected to decrease. This decrease is due to several factors including the fact that the switch will be tempered by the relatively high cost of the alternatives; consumers are turning to non-fluorocarbon replacements; and the increase in recycling and conservation of refrigerants will decrease demand for these alternatives, Further, HCFCs are identified in the 1990 CAAA as Class II ozone-depleting substances, and will be restricted after 2015 and banned after 2030. Based on the targeting of HCFCs for phaseout, as well as the other factors mentioned above, the total industrial demand for HF, and therefore its production, is expected to fall by 1996.[31]

Although the demand for HF increased by approximately 2 percent per year between 1978-1987,[32] it is expected to decrease by 4 percent between 1991 and 1996 due mainly to the accelerated CFC phaseout schedule announced by President Bush.[33] In 1987 and 1988, North American HF demand was estimated at 307,000 tons and 318,000 tons, respectively.[34] U.S. consumption was 241,000 tons in 1991 and is projected to fall to 231,000 tons in 1996, excluding captive use by the aluminum industry.[35]

ED_002700_00005500-00042

EXHIBIT 3-6
Major Users and Producers of Anhydrous Hydrogen Fluoride

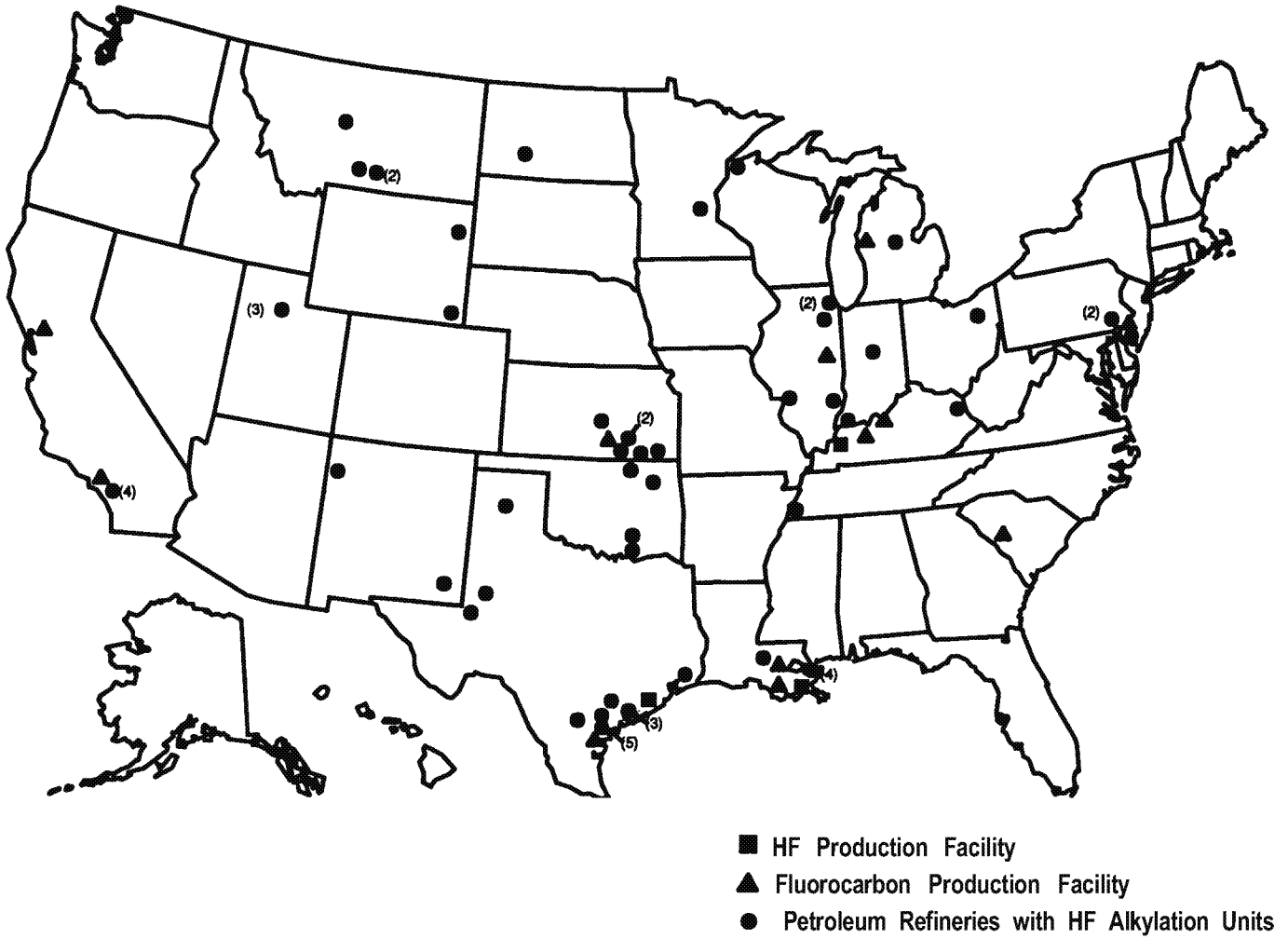

Source: 1991 Directory of Chemical Producers SRI International American Petroleum Institute and Morris, Jeff, Fina Oil and Chemical Company. comments from technical review of Hydrogen Fluoride Study Report to Congress, Draft May 8, 1992, June 1, 1991. (344)

ED_002700_00005500-00043

Few HF producers are likely to enter the market in the 1990s. Industrial Oxygen Co. Ltd. has indicated plans to become a major manufacturer of 5,000 tons per year of refrigerant gases and 2,200 tons per year of anhydrous hydrofluoric acid;[36] however, there has been no indication in the US. marketplace of this activity moving forward. Industrias Quimicas de Mexico SA de CV, a subsidiary of Paris-based Rhone-Poulenc SA, announced in 1990 that it would construct an HF and xanthate plant with an expected HF capacity of approximately 60,000 tons per year in Coahuila, Mexico, with startup planned for the end of 1992. [37] No subsequent activity has occurred, however, which would indicate this plant will be built. [38]

ED_002700_00005500-00044

ENDNOTES

1. Will, Ray, R. Willhalm, and S. Mori, SRI International, *Chemical Economics Handbook Product* Review: Fluorine *Compounds,* Preliminary Draft, May 20, 1992, p 53. (102)

2. "Chemical Profile, Hydrofluoric Acid," *Chemical Marketing Reporter,* July 25, 1988, p 50. (110)

3. "Chemical Profile, Hydrofluoric Acid."

4. SRI International, *1991 Directory of Chemical Producers United States of America,* Menlo Park, CA, 1991, p 704. (450)

5. Will, Ray.

6. Laumer, John and Harold Lamb, Elf Atochem North America Inc., comments from technical review of *Hydrogen Fluoride Study, Report* to *Congress,* Draft May 8, 1992, June 4, 1992. (290.8).

7. "Chemical Profile, Hydrofluoric Acid."

8. Will, Ray.

9. Chem-Intell Services, *Chem-Intell Database,* 1991. (115)

10. US. Department of Commerce, U.S. *Imports IM 145,* Bureau of the Census, 1991. (489.86A)

11. Will, Ray.

12. U.S. Department of Commerce, U.S. *imports IM 145.*

13. Will, Ray.

14. Hague, William J., Allied-Signal, comments from technical review of *Hydrogen Fluoride Study, Report to Congress,* Draft May 8, 1992, June 10, 1992. (153)

15. U.S. Department of Commerce, U.S. *Exports EM* 454, Bureau of the Census, 1991. (489.868)

16. Chemical Manufacturers Association Hydrogen Fluoride Panel, *The Hydrogen FluoridelHydrofluoric* Acid Industy, Washington, DC, May 7, 1991. Prepared for the U.S. Environmental Protection Agency. (270)

17. Chemical Manufacturers Association Hydrogen Fluoride Panel.

18. 'Hydrogen Fluoride Laser Safe for Transplants, But Wound Is Larger," *Ophthalmology Times,* September 15, 1990, p 7. (225)

19. "First Alpha Laser Tested," *Defense Electronics,* June, 1989, p 16. (139.7)

20. Chemical Manufacturers Association Hydrogen Fluoride Panel.

21. Will, Ray.

22. Will, Ray.

23. Will, Ray.

24. Chemical Manufacturers Association Hydrogen Fluoride Panel.

25. Chemical Manufacturers Association Hydrogen Fluoride Panel.

26. U.S. Environmental Protection Agency, "Protection of Stratospheric Ozone, Proposed Rule," 40 *CFR Part 82,* September 4, 1991. (415)

27. Will, Ray.

28. *"Annual Refining Survey," Oil & Gas Journal,* March 18, 1991, p 85-105. (30)

29. Morris, Jeff, American Petroleum Institute, Fina Oil and Chemical Company, comments from technical review of *Hydrogen Fluoride Study,* Report to *Congress,* Draft May 8, 1992, June 1, 1991. (344)

30. U.S. Environmental Protection Agency, "Protection of Stratospheric Ozone, Proposed Rule," 40 *CFR Part* 82, September 4, 1991.

31. Will, Ray.

32. "Chemical Profile, Hydrofluoric Acid."

33. SRI International, News *Brief,* "Demand for Hydrofluoric Acid Continues to Fall, Says SRI International Study," Menlo Park, CA, May, 1992. (451)

34. "Chemical Profile, Hydrofluoric Acid," *Chemical Marketing Repotter,* July 25, 1988, p 50. (110)

35. Will, Ray.

36. *Chem Weekly,* September 13, 1988, p 44. (117)

37. "Rhone-Poulenc to Supply U.S. Firms From Mexican Hydrofluoric Plant,' *Journal of Commerce,* May 16, 1990, p 1A. (423A)

38. Leiva, F.S., Chemical Manufacturers Association, comments from technical review of *Hydrogen Fluoride Study, Report* to *Congress,* Draft May 8, 1992, June 17, 1992. (293.12)

ED_002700_00005500-00046

This page intentionally left blank.

ED_002700_00005500-00047

4. REGULATIONS AND INITIATIVES

This chapter presents an overview of the federal, state, and local regulatory framework with which those industries producing, using, or transporting HF must comply; and a description of international efforts and initiatives dealing with the management of HF, either specifically or as one among several hazardous chemicals. Although regulations, guidelines, and standards will not eliminate the possibility of an HF accident, the purpose of this section is to determine how extensive and specific regulatory programs, industry standards and guidelines, and international initiatives are in terms of addressing the safety issues surrounding the handling of HF.

4.1 U.S. Federal Regulation of Hydrogen Fluoride

HF has been regulated by:

- the Environmental Protection Agency (EPA) under several regulations authorized by

  the Comprehensive Environmental Response, Compensation, and Liability Act (CERCIA), Tile Ill of the Superfund Amendments and Reauthorization Act (SARA) of 1986, also known as the Emergency Planning and Community Right To Know Act (EPCRA), and the Resource Conservation and Recovery Act (RCRA);

- the Department of Transportation (DOT) under the Hazardous Materials Transportation Act (HMTA) and the Hazardous Materials Transportation Uniform Safety Act (HMTUSA); and

- the Occupational Safety and Health Administration (OSHA) under the Occupational Safety and Health Act and the Clean Air Act Amendments of 1990.

Note: The Clean Air Act Amendments of 1990 (CAAA) require EPA to list HF among at least 100 substances targeted for accidental release prevention regulations under Clean Air Act §112(r). In addition, Clean Air Act §112(b) lists HF as a Hazardous Air Pollutant.

A summary of federal regulations that specifically cover HF and hazard designations of HF is presented in Exhibit 4-1.

4.1.1 EPA Regulations

CERCIA. Under CERCLA, releases of listed hazardous substances in quantities equal to or greater than their reportable quantity (RQ) are subject to reporting to the National Response Center. HF is listed under CERCLA with an RQ of 100 pounds.

SARA/EPCFIA. Under SARA/EPCRA section 302, EPA designated a list of chemicals as Extremely Hazardous Substances (EHSs) on the basis of acute toxicity and assigned Threshold Planning Quantities (TPQs) to these substances, based on toxicity and volatility. If a facility has an EHS in quantities above the TPQ, it must report to the State Emergency Response Commission (SERC); the SERC notifies the Local Emergency Planning Committee (LEPC), and the facility will be included in the local emergency plan. The facility must provide the LEPC with the name of a facility

ED_002700_00005500-00048

EXHIBIT 4-1
Regulatory Designations of Hydrogen Fluoride

Regulating Agency	Regulation	Designation
EPA	CERCIA (RQ 100 lbs)	Hazardous Substance
EPA	SARA/EPCRA Section 302 (TPQ 100 lbs)	Extremely Hazardous Substance
EPA	SARA/EPCRA Section 313	Toxic Chemical
EPA	RCRA	Hazardous Waste (if discarded)
EPA	CAAA	Required to be included on List of Regulated Substances for Accidental Release Prevention
DOT	HMTA	Corrosive Material
OSHA	Occupational Safety and Health Act, Air Contaminants Standard (PEL 3 ppm, STEL 6 ppm)	Air Contaminant
OSHA	Process Safety Management Standard (Threshold Quantity 1,000 lbs)	Highly Hazardous Chemical

representative and information requested by the LEPC that is necessary for planning. HF is included on the list of EHSs with a TPQ of 100 pounds; therefore, facilities with more than 100 pounds of HF are included In local emergency plans and may be required to participate in local planning efforts. HF Is one of 360 acutely toxic chemicals that EPA has included on the list of EHSs. These substances are listed because they have the potential to cause death in unprotected populations after relatively short exposure periods at low doses. This list includes 24 substances that are gases under ambient conditions, including chlorine, ammonia, and hydrogen chloride, as well as HF; it also includes liquids, such as sulfuric acid, and a number of solids.

Section 311 of SARA/EPCFtA requires a facility to make a one-time submission to the LEPC, SERC, and local fire department of either copies of, or a list of, material safety data sheets (MSDS) for hazardous chemicals on the site In quantities above 10,000 pounds, or, in the case of EHSs, above the TPQ (100 pounds in the case of HF).

Section 312 of SARA/EPCRA requires that an annual inventory form be submitted each year to the LEPC, SERC, and local fire departments. Information contained in the form includes the amount of hazardous material on site and its location. The annual inventory form is a simple repotting requirement that tells the local government what is on site.

ED_002700_00005500-00049

Under SARA/EPCRA section 313, facilities are required to report annual emissions of over 300 listed chemicals, including HF. EPA maintains a database of the reported emissions, the Toxic Release Inventory (TRI) database. See Appendix VII for TRI data from 1990.

RCRA. HF may be listed as a hazardous waste (U134) if it is discarded as a commercial chemical product, manufacturing chemical intermediate, or off-specification commercial chemical or manufacturing intermediate. This hazardous waste designation includes container residues and spill residues, HF may also be a hazardous waste if it exhibits the corrosivity characteristic (D002) or the reactivity characteristic (D003).

Clean Air Act Amendments. Under section 112(r) of the Clean Air Act (CAA) as amended, Congress specifically mandated that HF be included on a list of at least 100 regulated substances for accidental release prevention. On January 19, 1993 (58 FR 5102) EPA published a proposed rule listing 100 toxic substances, including HF, as well as a list of flammable substances and high explosives as a category. Threshold quantities were proposed for all listed substances; the proposed threshold for HF is 500 pounds. The list of substances is intended to focus on those that, when released, can cause death, injury, or serious adverse effects to human health or the environment. Facilities that use these chemicals in quantities exceeding their thresholds need to comply with new CAA regulations on release prevention, detection, and emergency response. One accident prevention provision of the CAA as amended mandates the development of regulations requiring facilities to prepare and implement risk management plans. These regulations are to include a requirement for a facility to conduct a hazard assessment; to develop a program, including maintenance and training, for preventing accidental releases; and to develop a program for emergency response, EPA is currently developing risk management plan regulations.

Section 112(r) of the CAA as amended also includes a general duty for owners and operators of facilities producing, handling, or storing any quantities of extremely hazardous substances, whether or not they are specifically listed, to perform activities to prevent and mitigate accidental releases. Activities such as hazards identification using appropriate hazard assessment techniques; designing, maintaining, and operating a safe facility; and minimizing the consequences of accidental releases if they occur are also included.

As discussed below, OSHA has developed a Process Safety Management Standard for the protection of workers from catastrophic chemical accidents. The process safety management regulations being developed by EPA are intended to protect the public and the environment from such accidents. EPA recognizes that process safety management programs to protect workers and to protect the public and the environment should be essentially the same. Therefore, EPA is working closely with OSHA to avoid duplicative and confusing rulemakings.

Section 112(b) of the CAA lists HF as a Hazardous Air Pollutant (HAP). EPA is developing standards to control emissions of HAPs from stationary sources in particular industries. These standards may address equipment leaks and fugitive emissions.

4.1.2 OSHA Regulations

Hazard Communication Standard. Under the Hazard Communication Standard of the Occupational Safety and Health Act, employers must provide information to employees about hazardous chemicals to which they may become exposed. Employers are required to disclose information about HF because it is highly corrosive and acutely toxic. Chemical manufacturers, importers, and distributors must provide material safety data sheets (MSDS) to customers and have them available on site to workers. A written hazard communication program is required.

ED_002700_00005500-00050

Protective Equipment. Under the Occupational Safety and Health Act, employers must provide personal protective equipment wherever necessary, depending on the nature of the hazards to which workers might be exposed. Since HF is extremely corrosive, certain protective gear is necessary to guard against exposure. Equipment must also be inspected, properly used, and maintained.

Air Contaminants. Under the Occupational Safety and Health Act, employee exposure to about 600 air contaminants in the workplace is limited to specified concentrations. The eight-hour time-weighted average (TWA) permissible exposure limit (PEL) is a level that the employee's average airborne exposure cannot exceed in any eight-hour work shift. For HF, this level is 3 ppm. The short term exposure limit (STEL) is a 15-minute TWA exposure that cannot be exceeded at any time during the workday. In its final rule of January 19, 1989, OSHA supplemented the PEL with a STEL for HF of 6 ppm; however, the exposure limits set in the 1989 rulemaking were overturned in court. The 3 ppm PEL was established in an earlier rulemaking and is still in effect.

Clean Air Act Amendments. Under the Clean Air Act Amendments section 304, OSHA was required to promulgate a chemical process safety standard to prevent accidental releases of chemicals which could pose a threat to employees. OSHA published a final rule on February 24, 1992, that requires development of a process safety management system for any process involving a highly hazardous chemical at or above its threshold quantity. The rule includes a list of highly hazardous chemicals and threshold quantities, Anhydrous HF is listed with a threshold quantity of 1,000 pounds; aqueous HF is not covered (29 CFR Part 1910).

The OSHA Process Safety Management Standard is intended to protect employees by preventing or minimizing the consequences of catastrophic releases of toxic, reactive, flammable, or explosive chemicals, The OSHA standard is designed to foster the implementation of comprehensive, integrated management systems at facilities handling highly hazardous chemicals. This approach holds great promise for prevention of catastrophic chemical accidents. Process safety management programs not only prevent deaths and injuries, but also have the added benefit of increased productivity resulting in cost savings for employers.

Requirements of the OSHA standard apply to processes involving highly hazardous chemicals in quantities at or above their threshold quantities. These requirements include development of a compilation of written process safety information, including information about chemical hazards, technology of the process and equipment used, to identify and understand the hazards posed by processes involving highly hazardous chemicals. Process hazards analysis, carried out by a team with expertise in engineering and process operations, is required. Process hazards analysis, a central element of good process safety management, involves a systematic review of what could go wrong and what safeguards are in place or needed to prevent the accidental release of hazardous chemicals, including HF. The OSHA standard requires partial completion of the initial process hazards analysis by May 26, 1994 and completion by May 26, 1997; the analysis must be updated every five years. The standard also includes requirements for development of written operating procedures for processes involving highly hazardous chemicals, employee training, performance-based responsibilities for contractor safety, pre-startup safety reviews for new and significantly-modified facilities, maintenance of mechanical integrity of critical equipment, and establishment of procedures for management of changes to process chemicals, technology, equipment, and procedures. In addition, the standard mandates a permit system for hot work such as welding, investigation of incidents involving an accidental release or 'near miss' (a minor release that could have been worse or a major event that was luckily avoided), emergency action plans, and compliance and safety audits to ensure programs are in-place and operating properly. Employee participation is required in process safety management programs developed under the standard. More details on the elements of process safety management and their role in prevention of accidents involving HF may be found in Chapter 6.

ED_002700_00005500-00051

4.1.3 DOT Regulations

The Department of Transportation (DOT) regulates the transport of hazardous materials, including HF. DOT classifies both anhydrous and aqueous HF as "corrosive materials" (hazard class 8) in accordance with 49 CFR, Section 172.101[1] Anhydrous HF and aqueous HF in concentrations greater than 60 percent are also designated as being in packing group I, the group that is associated with the highest degree of hazard. Aqueous HF solutions of concentrations of 60 percent or less are also considered "corrosive material" but fall in packing group II. Anhydrous and aqueous HF also meet DOT criteria for the "poison" hazard class. Corrosive and poison labels are required. According to DOT, HF also meets the DOT definition of a poison gas (class 2, division 3) because of its vapor pressure at ambient temperature and its toxicity, and is a "poisonous by inhalation" material. It is classified as corrosive (class 8) in order to conform to international transportation regulations.[2]

The DOT regulations include requirements for shipping containers, placarding of vehicles and bulk packaging, and shipping procedures. For example, both anhydrous and aqueous HF must be labeled "Corrosive" with a label that is white in the top half and black in the lower half. Bulk shipping containers must carry a "Corrosive 8" placard.

DOT periodically issues guidance for emergency response associated with shipping containers of any kind. The 1990 Emergency Response Guidebook provides information to first responders at an accident for initial isolation and protective action distances and information on potential hazards and emergency actions. Exhibit 4-2 shows the initial isolation distances for anhydrous HF. Guides for anhydrous HF (Guide 15) and aqueous HF (Guide 59) are presented in Exhibits 4-3 and 4-4, respectively.[3]

EXHIBIT 4-2
DOT initial isolation and Protective Action for Anhydrous Hydrogen Fluoride

		Small Spills (Leak or spill from a small package or small leak from a large package)		**Large Spills** (Leak or spill from a large package or spill from many small packages)	
Substance	ID No.	First **ISOLATE** in all directions (feet)	Then PROTECT those persons in the DOWNWIND direction (miles)	First **ISOLATE** in all directions (feet)	Then, PROTECT those persons in the DOWNWIND direction (miles)
Anhydrous HF	1052	300	1	900	3

ED_002700_00005500-00052

DOT is also responsible for implementation of the Hazardous Materials Transportation Uniform Safety Act (HMTUSA). Provisions related to regulations that might affect the shipment of HF include:

- regulations on highway routing that account for public safety;
- modifications to shipping papers that would include disclosure to emergency response personnel; and
- training for hazmat employers on loading, handling, storing, and transport of hazardous materials and emergency preparedness for accidents.

4.2 U.S. State and Local Regulations

In addition to Federal regulations, many states and local governments have regulations to deal with the hazards posed by the handling and use of HF. The state governments in California, Delaware, New Jersey and Nevada are active in regulating HF through their chemical accident prevention programs. The South Coast Air Quality Management District (SCAQMD) in California is the only government agency to adopt specific HF regulations. On the local level, the City of Torrance, California has addressed the safe use of HF at a specific refinery within its jurisdiction.

4.2.1 State Risk Management Programs: Delaware, New Jersey, California and Nevada

Delaware, New Jersey, California, and Nevada have implemented regulatory programs to promote risk management planning for the prevention of chemical accidents at facilities that handle, use, or produce certain hazardous chemicals. If the quantity of the chemical on-site exceeds a specified threshold quantity, the facility must notify the regulating agency, and prepare and submit a risk management plan. Although the specific requirements differ from state to state, a risk management plan generally consists of a description of the existing management program to prevent accidents (e.g., preventive maintenance, training), the results of a formal hazard and/or risk assessment conducted by the facility, a summary of possible equipment or procedural actions to reduce risk, and a plan with a schedule to implement those actions. New Jersey and California require a facility to submit a complete risk management plan to the state or local government for approval. In Delaware, facilities are required to develop a risk management plan and make it available to inspectors during site inspections. Nevada requires that the owner or operator of a facility provide, at least every three years, a report on safety to the state government.

HF is a listed chemical in the risk management programs of all four states. The threshold quantities for HF in California, New Jersey, Delaware, and Nevada are 100, 500, 900, and 1,000 pounds, respectively. California has adopted the EPA TPQ of 100 pounds; facilities are covered if the maximum quantity on-site at any time exceeds 100 pounds. New Jersey facilities are covered if threshold quantity of 500 pounds is exceeded by the maximum quantity on-site at any time. Delaware allows adjustment of the threshold quantity if the distance to the facility fenceline is greater than 100 meters. Delaware requires facilities to carry out calculations to determine the maximum quantity that could be released at one time in an accident. If this quantity exceeds the threshold, the facility is covered. Nevada facilities are subject if they, at any time, store or handle 1,000 pounds or more of HF.

ED_002700_00005500-00053

Exhibit 4-3
DOT Response Guide for Anhydrous Hydrogen Fluoride

ERG90 **ANHYDROUS HYDROGEN FLUORIDE** **GUIDE 15**

POTENTIAL HAZARDS

HEALTH HAZARDS

Poisonous; may be fatal if inhaled or absorbed through skin.
Contact may cause burns to skin and eyes.
Contact with liquid may cause frostbite.
Clothing frozen to the skin should be thawed before being removed.
Runoff from fire control or dilution water may cause pollution.

FIRE OR EXPLOSION

Some of these materials may burn, but none of them ignites readily.
Cylinder may explode in heat of fire.

EMERGENCY ACTION

Keep unnecessary people away; isolate hazard area and deny entry.
Stay upwind, out of low areas, and ventilate closed spaces before entering.
Positive pressure self-contained breathing apparatus (SCBA) and chemical protective clothing which is specifically recommended by the shipper or manufacturer may be worn. It may provide little or no thermal protection,
Structural firefighters protective clothing is not effective for these materials.
Isolate the leak or spill area Immediately for at least 150 feet in all directions.
See the Table of Initial Isolation and Problems Action Distances If you find the ID Number and the name of the material there, begin protective action,
CALL CHEMTREC AT 1-800-424-9399 AS SOON AS POSSIBLE, especially If there Is no local hazardous materials team available.

FIRE

Small Fires: Dry chemical or CO_2.
Large Fires Water spray, fog or regular foam.
Do not get water Inside container.
Move container from from area if you can do it without risk
Apply cooling water to sides of containers that are exposed to flames until well after fire is out Stay away from ends of tanks.
Isolate ares until gas has dispersed.

SPILL OR LEAK

Stop leak if you can do so without risk.
Fully-encapsulating, vapor-protective clothing should be worn for spills and leaks with no fire.
use water spray to reduce vapor; do not put water directly on leak or spill area.
Small Spills: Flush area with flooding amounts of water.
Large Spills: Dike far ahead of liquid spill for later disposal.
Do not get water Inside container.
Isolate area until gas is dispersed.

FIRST AID

Move victim to fresh air and tail emergency medical care; if not breathing, give artificial respiration; if breathing is difficult give oxygen.
In case of contact with material, Immediately flush skin or eyes with running water for at least 15 minutes.
Remove and Isolate contaminated clothing and shoes at the site.
Keep victim quiet and maintain normal body temperature.
Effects may be delayed; keep victim under observation.

ED_002700_00005500-00054

Exhibit 4-4
DOT Response Guide for Aqueous Hydrogen Fluoride

ERG90 **AQUEOUS HYDROGEN FLUORIDE** **GUIDE 59**

POTENTIAL HAZARDS

HEALTH HAZARDS

Poisonous if inhaled or swallowed.
Skin contact poisonous.
Contact may cause burns to skin and eyes.
Fire may produce irritating or poisonous gases.
Runoff from fire control or dilution water may cause pollution.

FIRE OR EXPLOSION

Some of these materials may bum, but non. of them ignites readily.
Some of these materials may ignite combustibles (wood, paper, oil. etc.).

EMERGENCY ACTION

Keep unnecessary people away; isolate hazard area and deny entry.
Stay upwind, out of low areas, and ventilate closed spaces before entering.
Positive pressure self-contained breathing apparatus (SCSA) and chemical protective clothing which is specifically recommended by the shipper or manufacturer may be worn. it may provide lime or no thermal protection.
Structural firefighters' protective clothing is not effective for these. materials.
CALL CHEMTREC AT 1-900-424-9300 AS SOON AS POSSIBLE, especially if there is no local hazardous materials team available.

FIRE

Some of these materials may react violently with water.
Smell Fires: Dry chemical, CO_2, water spray or regular foam.
Large Fires: Water spray, fog or regular foam.
Move container from fire area if you can do it without risk.
Apply cooling water to sides of containers that are exposed to flames until well after fire is cut Stay away from ends of tanks

SPILL OR LEAK

Do not touch or walk through spilled material; stop leak if you can do it without risk.
Fully-encapsulating, vapor-protective clothing should be worn for spills and leaks with no fire.
us. water spray to reduce vapors.
Smell Spills: Take up with sand or other noncombustible absorbent material and place into containers for later disposal.
Large Spills: Dike liquid spill for later disposal.
Isolate area until gas is dispersed.

FIRST AID

Move victim to fresh air and call emergency medical care; if not breathing, give artificial respiration; if breathing is difficult, give oxygen.
In case of contact with materiel, Immediately flush skin or eyes with running water for at least 15 minutes.
Remove and isolate contaminated clothing end shoes at the sit..
Keep victim quiet and maintain normal body temperature.
Effects may be delayed: keep victim under observation.

ED_002700_00005500-00055

Once a facility meets or exceeds the specified chemical threshold in New Jersey, Delaware, or Nevada as described above, the facility must develop a plan. Once the statutory quantity has been met in California, it is up to the local implementing agency (e.g., fire department) to determine whether a plan is required. The requirements under the programs include:

- registration with the state;
- up-to-date process safety information;
- a hazard evaluation;
- standard operating procedures;
- training in standard operating procedures;
- preventive maintenance programs;
- safety audits;
- pre-start-up reviews before initiating new processes;
- management of change procedures;
- accident investigation; and
- emergency response procedures.

The state programs were implemented to require facilities to consider and implement ways to reduce risk associated with handling hazardous chemicals. These regulations anticipate the development of federal risk management plan regulations required under the Clean Air Act Amendments.[4,5,6,7]

4.2.2 Texas Air Control Board

Under the authority of the Texas Clean Air Act (TCAA) of 1965, the Texas Air Control Board (TACB) established a permitting program to control emissions from new or modified industrial facilities which emit air pollutants, In September 1971, TACB Regulation VI was adopted which specifies that all new or modified facilities must obtain a permit prior to the start of construction. Certain requirements must be met before obtaining a permit as specified in Regulation VI.

Over the years, Texas has seen significant air quality improvement through the use of best available control technology (BACT) negotiated during the permit process; primarily through close scrutiny of traditional sources (e.g., process vents, bulk loading, and fugitive emissions). Beginning in 1979, some additional sources not previously reviewed in detail also became a focus of the TACB permit review. These 'non-traditional sources" are either continuous emissions of air contaminants from systems not directly related to the process (e.g., cooling towers and wastewater treatment systems) or accidental releases caused by upsets, maintenance, or disasters.

HF is one of a list of chemicals which TACB staff presently considers to have disaster potential and for which a 'disaster review" may be required. Disaster reviews are required for proposed projects that either handle these chemicals in sufficient volumes to produce a life-threatening off-plant impact in the event of a disaster, or use processes that could increase the probability of off-site life-threatening releases. A disaster review may combine a health effects review of the predicted impacts caused by a catastrophic release and an engineering analysis of the disaster prevention and control systems employed at a facility.

In a disaster review, process areas with the greatest hazard potential are identified and several worst-case scenarios are defined. Catastrophic release rates are calculated, dispersion models are used to estimate maximum concentration, and predicted impacts of these releases are considered based on magnitude, duration, and movement of the plume. If the predicted impacts are considered too great, the applicant must propose all reasonable, possible design and operational changes to reduce the probability, magnitude and duration of a catastrophic release. If these changes satisfy the

TACB-specified disaster review requirements, the permit engineer will incorporate special provisions into the permit which will ensure enforceability and maintenance of the applicant's disaster response and prevention program.[8] The modeling and effects evaluation steps may be unnecessary if the applicant concedes that a release would result in a life-threatening situation. Whether modeling is required or not, the applicant works with the permit reviewer to incorporate changes into the design of the facility to reduce the probability, magnitude, and duration of such a potential release.

The TACB staff has particular concerns about the use of anhydrous HF in urban areas. Because of recent HF related inquiries and the influx of many new permit reviewers, the TACB staff recently instructed permit reviewers that HF, like many other toxic chemicals, is to be given an intensive review for disaster potential. This may include reviews of: safety features incorporated into the design of the facility to minimize off-site effects: emergency plans designed to mitigate off-site effects of any significant release; and the potential for future migration of population into an area near the facility. Consideration is also given to the past performance of the facility in handling hazardous materials. If TACB staff concludes that a facility, even with excellent engineering design, is simply too dangerous to be located at a proposed new site, denial of the permit may be recommended. Overall, the disaster review is conducted to assure that risk to the public is minimized. Review of HF facilities by TACB staff has included review of several petroleum refinery HF alkylation units and an HF production unit.[9,10]

4.2.3 HF Regulations from the South Coast Air Quality Management District

Although the CAA indicates that EPA should focus its efforts on "those regions of the country that do not have comprehensive health and safety regulations with respect to HF," EPA believes it is important to discuss the analysis performed by the South Coast Air Quality Management District (SCAQMD) as one method of evaluating HF hazards. As a result of their analysis, SCAQMD proposed Rule 1410 to control HF in Southern California. The purpose of this section is to describe some of the issues associated with HF by examining SCAQMD's rule. SCAQMD shared considerable information with EPA about SCAQMD's approach for evaluating HF. SCAQMD staff noted, however, that their decision with respect to HF is site-specific and does not necessarily reflect conditions associated with HF use elsewhere. It is important to note that Rule 1410 was litigated, during which time its implementation was suspended by the court. However, on July 30, 1993, a court decision permitted implementation of the rule if the SCAQMD corrects certain procedural errors that were made in the original promulgation of the rule.

In the Los Angeles Basin, the SCAQMD is responsible for developing and enforcing air quality control rules. In response to concern about the safety of the use of HF in the Los Angeles Basin, and the HF accidents at the Marathon Oil refinery in Texas City, Texas, and at the Mobil refinery in Torrance, California, the SCAQMD adopted Rule 1410 on April 5, 1991. Rule 1410 specifically regulates the storage, use, and transportation of hydrogen fluoride. It is the only regulation in the U.S. directed specifically at anhydrous HF. Rule 1410 is partly intended to eliminate the possibility of harm to the public due to an accidental release of HF. It applies to fluorocarbon production facilities and petroleum refineries that use HF. The rule has three general requirements: 1) **Phase Out, 2) Interim Control Measures,** and **3) Reporting and Storage/Usage Inventory Requirements.** Additional details on each section of Rule 1410 can be found in Appendix X. The rule calls for the phase out of the use of anhydrous HF at one fluorocarbon facility on or before January 1, 1999, and four petroleum refineries on or before January 1, 1998. Rule 1410 also requires that these facilities implement interim control measures to prevent the release of HF until the phase out. Facilities that store or use either aqueous or anhydrous HF must also comply with the notification and storage usage report provisions of the rule.

In developing Rule 1410, the SCAQMD conducted facility-specific evaluations of the hazards of HF at the five facilities that would be affected. These evaluations included computer modeling and

ED_002700_00005500-00057

impact analysis, In addition, the SCAQMD produced several technical and policy support documents. In one document the SCAQMD discussed its concerns about HF safety at the five facilities in the South Coast Air Basin (four refineries: Golden West, Mobil, Powerine, and Ultramar, and one fluorocarbon production facility: Allied-Signal)." The SCAQMD stated that although precautions could be taken on these sites, available mitigating measures could not eliminate the consequences of a major accident. The SCAQMD cited both the Bhopal accident in India and the accident at Marathon. In examining current practices in transportation, storage and use, the SCAQMD found that current safety practices were not sufficient to assure public safety and consequently recommended a phase out of anhydrous HF at the five facilities. In addition, the SCAQMD conducted an environmental assessment for the proposed Rule 1410 that describes the rule and its potential impacts as well as alternative actions to those required by the rule.[12] In addition, the SCAQMD published guidelines to the proposed Rule 1410, which outlined the general requirements of the rule and compliance requirements for affected facilities.[13]

The phase out section of Rule 1410 mandates that on or after January 1, 1998, refineries and fluorocarbon production facilities cannot use anhydrous HF unless it is contained in a mixture, which in a serious, near worst-case accidental release, will not result in atmospheric concentrations equal to or greater than 20 parts per million (ppm) for five minutes and 120 ppm for one minute at or beyond the facility boundary. The interim control measures require that until the phase-out takes effect, facilities must install safety equipment and implement the procedures required by the SCAQMD to reduce the impact of an HF release. In addition, Rule 1410 requires that after July 1, 1991, an owner or operator must report to the SCAQMD any HF release that results in exposed persons requiring medical treatment at an off-site facility, evacuation of any portion of the facility premises, or HF aerosol transport beyond the facility property boundaries.

Prior to suspension of Rule 1410, the five industrial facilities complied with the interim control provisions. For example, four of the five affected facilities now have HF detectors connected via remote terminal units (RTUs) which can transmit detection readings directly to SCAQMD. Also in accordance with the interim provisions, the Allied-Signal facility in El Segundo had been working on seismic upgrading to lessen the chance of release in case of earthquakes.

A phase out of HF would result in either the closure of the HF facilities in the area, or in a retrofit of these facilities to accommodate an HF substitute unless HF can be modified to prevent aerosol formation. Refineries also produce alkylate, using sulfuric acid as a catalyst, However, there may be substantial costs associated with switching from HF to sulfuric acid. Approximately 48% percent of the total alkylate production capacity in the U.S. uses sulfuric acid as the alkylation catalyst.[14] At present there is no substitute for HF in fluorocarbon production.

Alkylate is becoming increasingly important for the production of clean burning high octane motor fuels. However, the decision whether to use sulfuric acid or HF as an alkylation catalyst is not straightforward, nor is the decision to switch from one particular catalyst to the other, as discussed below. The SCAQMD in its support documentation for Rule 1410 asserted that sulfuric acid is a viable alternative for Southern California because of particular circumstances surrounding sulfuric acid supply, sulfuric acid regeneration capacity and safety issues associated with HF and sulfuric. Some stakeholders contend that sulfuric acid is far safer for the public located near refineries and that EPA should require refineries using HF to switch to sulfuric. However, other stakeholders maintain that there are other significant risk issues associated with sulfuric acid alkylation that must be considered, For example, up to 100 times more sulfuric acid than HF must be transported for use in the alkylation process. The transport and transfer of large amounts of fresh and spent sulfuric acids must be considered in terms of increased risk of worker exposure due to increased handling requirements and risk to the public from transportation accidents.[15] Further, the use of sulfuric acid generates waste streams that require treatment and disposal and there is concern that one dangerous chemical is being substituted for another. Upon release under alkylation unit conditions, sulfuric acid will not form

ED_002700_00005500-00058

a dense cloud of vapor and aerosol, as HF may.[16] However, releases from sulfuric acid production and regeneration plants could result in mists of sulfuric acid, sulfur dioxide (a toxic gas) and sulfur trioxide (a toxic, reactive liquid).[17]

The intent of this study, as mandated by Congress, is not to determine the overall advantages or disadvantages of sulfuric versus HF alkylation, but primarily to identify the hazards of HF in its industrial production and use. Therefore, no additional comparison of the two alkylation processes will be made in this report. While both technologies are viable, the choice between the two involves consideration of complex site-specific factors, economics and safety. The decision to switch from HF alkylation to sulfuric alkylation would also be very complex and would involve many of the same site-specific considerations, which are outside the scope of this study. This is an area, however, where a comprehensive analysis comparing all relevant issues is needed.

4.2.4 City of Torrance, California

The City of Torrance, California has attempted to ensure the safety of HF operations at the Mobil Oil refinery within its jurisdiction because of safety concerns. These concerns were raised because of the history of accidents at the refinery as well as by the results of a 1986 industry-sponsored HF study regarding behavior of HF releases.

In April 1987, the City Council of Torrance brought suit against Mobil in the California State Superior Court in Los Angeles, alleging that the Mobil refinery was a public nuisance and seeking both an injunction barring Mobil from polluting the air with HF and other toxic chemicals, and an order requiring the company to operate the refinery safely." While the case was pending, another accident occurred at the refinery in which 100 pounds of HF were released in an explosion and fire. No one was injured as a result of exposure to HF. Mobil chose to settle the lawsuit out of court. Mobil agreed to work on reformulating the HF catalyst to prevent it from forming a vapor cloud in the event of a release; the reformulated catalyst is to be ready by the end of 1994. If the testing is not successful, Mobil has agreed to discontinue operating the HF alkylation unit by the end of 1997 and consider other alternatives, including H_2SO_4 alkylation.[19] The settlement also stipulates that an outside consulting firm be hired to study various plant operations and safety issues over a period of seven years. This outside consultant, whose actions are subject to court approval, will recommend ways to improve the plant's safety record.*'

4.3 International Efforts

The international community shares a concern about HF, however, there are no foreign national or international regulations that address HF specifically. Instead, most countries regulate HF as one of many hazardous materials of concern. A few countries regulate large quantities of HF as part of their accident prevention regulations. A small number of other countries have conducted studies of HF and explored regulatory options to reduce risk. The outgrowth of these international efforts concerning HF includes the development of: publications such as technical guidance manuals to promote safe handling of HF; models to determine the behavior, consequences, and risks of accidental HF releases; and various non-regulatory programs and initiatives by both industry and government agencies to prevent HF releases.

4.3.1 Multinational Efforts

The Seveso Directive. Following two major hazardous materials accidents, the European Community issued a Council Directive on the major accident hazards of certain industrial activities, commonly called the Seveso Directive (82/501/EEC). Effective January 8, 1984, the Directive is concerned with the prevention of major accidents and the limitation of their adverse consequences to man and the environment. HF is one of the listed chemicals subject to the Directive.

ED_002700_00005500-00059

Under the Directive, manufacturers must report if their activities involve the use of HF or other listed chemicals in amounts greater than specified quantities. The current threshold quantity for HF is 50 metric tons (110,000 pounds). In addition to the repotting requirement, the Seveso Directive also requires that member countries develop emergency response plans and perform safety studies for facilities handling hazardous chemicals. Although recent amendments to the Directive have moved away from regulation of individually listed substances and toward regulation of categories of chemicals, HF remains one of the few individually listed substances.[21]

The World Bank. The World Bank and the International Finance Corporation require evaluation of the adequacy and effectiveness of measures to control major hazard accidents that might affect people and the environment outside plant boundaries for projects that request funding. For this purpose the World Bank developed "The World Bank Guidelines for Identifying, Analyzing, and Controlling Major Hazard Installations in Developing Countries." These guidelines are based substantially on the European Communities' directive on major accident hazards of certain industrial activities, and regulations promulgated under the United Kingdom Health and Safety at Work Act. The guidelines apply generally to industrial processes, storage, and transportation of hazardous materials. Hazardous chemicals are grouped into four categories: Very Toxic Substances, Other Toxic Substances, Highly Reactive Substances, and Explosive or Flammable Substances. HF meets the criteria as a Very Toxic Substance.

To support the implementation of those guidelines, the World Bank has also developed the document, "Manual of Industrial Hazard Assessment Techniques," which provides both hazard and risk assessment methodologies that can be applied to existing operations as well as to rehabilitation and expansion projects. For those failures that would cause major severe damage or loss of life, on or off the plant site, the first objective is to reduce the magnitude of the potential damage through modification of the plant. If damage reduction is not possible, a risk analysis may be required to determine how to reduce the probability of the hazardous event.[22,23]

Industry Standard from the European Chemical Industry Council. The European Chemical Industry Council (the Conseil Europeen des Federations de l'Industrie Chimique (CEFIC)), headquartered in Brussels, Belgium, represents the chemical industry in 15 European countries. A sector group of the council called the European Technical Committee on Fluorine (CTEF) addresses issues related to HF. The European HF producers, acting within the CTEF have issued a recommended code to formalize a general standard for HF safety. The recommendations proposed in the code are based on the experience of HF producers and a compilation of various measures and practices used by member companies in the CTEF. Over the last 10 years, CTEF has produced several documents as part of the code that covers specific equipment or practices within the following general topics: storage, transport, and safety equipment for HF; handling procedures for HF; emergency response and planning for HF releases; physical properties of HF, and medical advice for HF exposure. These recommendation documents form a comprehensive industry standard for producers and uses of HF, but are not intended as a substitute for the various national or international regulations which already cover HF. The recommendations serve as a guide that can be adapted and utilized in consultation with an HF producer. Future recommendation documents are planned for pumps and personal protective equipment.[24]

Awareness and Preparedness for Emergencies at the Local Level (APELL). Awareness and Preparedness for Emergencies at the Local Level (APELL) is an initiative sponsored by the Industry and Environment Office (IEO) of the United Nations Environment Programme (UNEP) in cooperation with the Chemical Manufacturers Association (CMA) and CEFIC. APELL is an international program designed to create and increase community awareness of hazards within the community from any industrial or commercial activities with the potential for fire, explosion, or release of hazardous materials. Based on this awareness, APELL will further assist the community in developing a cooperative plan to respond to any emergencies that these hazards might present. In

ED_002700_00005500-00060

most countries participating in APELL, HF would be considered to pose a sufficient hazard to merit focus in the program.

APELL works by providing information to concerned members of the community on industrial hazards and the measures taken to reduce these risks; by reviewing, updating, or establishing emergency response in the local area; and by increasing local industry involvement in community awareness and emergency response planning. In addition, APELL serves to integrate industry response plans with local emergency response plans for the community to handle all types of emergencies, and to involve members of the community in the development, testing and implementation of the overall emergency response plan. Although APELL was primarily designed for governments of developing nations, UNEP provides APELL and APELL training to any nations, local governments, or facilities that wish to implement the program. UNEP has provided training in areas such as Eastern Europe, Tunisia, Egypt, and India.[25]

Guiding Principles for Chemical Accident Prevention, Preparedness and Response. The Guiding Principles for Chemical Accident Prevention, Preparedness and Response is a document produced by the Organisation for Economic Co-operation and Development (OECD). The OECD is an intergovernmental organization in which 24 industrialized countries from North America, Western Europe, and the Pacific work together to respond to international problems.

The Guiding Principles provide general guidance for the safety, planning, construction, management, and operation of hazardous installations in order to prevent accidents involving hazardous substances. Recognizing that despite prevention activities accidents may occur, the Guiding Principles recommend ways to mitigate adverse effects through effective land-use planning and emergency preparedness and response. The Principles apply to all hazardous installations including fixed facilities that produce, process, use, handle, store, or dispose of hazardous substances and those that could have a major accident involving hazardous substances. Although there is no specific list of chemicals, facilities that handle HF would likely fall under the Principles. The Principles also provide advice related to the role and responsibilities of public authorities, industry, employees and their representatives, as well as other interested parties such as non-governmental organizations and members of the public potentially affected by an accident[26]

Convention on the Transboundary Effects of Industrial Accidents. The United Nations Economic Commission for Europe developed a convention that requires signatory countries, including the United States, to protect human beings and the environment against industrial accidents by: preventing such accidents as far as possible; reducing their frequency and severity; and mitigating their effects. The convention requires that signatory countries develop prevention, preparedness, and response plans, A key element of the convention is a requirement for exchange of information. Under the plan, if a facility contains more than a reportable quantity of a chemical it must notify the bordering country of the existence of that chemical in the facility. The bordering country can then develop a plan to deal with an accidental release. The convention covers many chemicals, including HF.[27]

4.3.2 Great Britain

Control of Industrial Major Accident Hazards (CIMAH) Regulation. Following an explosion at an industrial facility at Flixborough in 1974, the United Kingdom's Health and Safety Commission appointed a committee of experts, the Advisory Committee on Major Hazards (ACMH), to consider the problems of industrial activities which pose major hazards beyond the immediate vicinity of the work place. An underlying principle of the ACMH is that the primary responsibility for controlling and minimizing risks should lie with those who create the risks. As an outgrowth of these efforts, Great Britain adopted the Seveso Directive. To implement the Directive, Great Britain passed the Control of Industrial Major Accident Hazards (CIMAH) Regulations 1984, which were designed to prevent major

ED_002700_00005500-00061

industrial accidents. The CIMAH Regulations cover most of the chemical and petrochemical industry that use substances which have dangerous flammable, explosive, or toxic properties, including HF.

In addition to the CIMAH regulations, the United Kingdom's Health and Safety Executive has been developing and using risk-based criteria for determination of planning decisions regarding major hazard facilities, including HF.[28]

Storage of a substance is treated differently from process use. "A Guide to the Control of Industrial Major Accident Hazards Regulations 1984" published by the Office of the Health and Safety Executive (HSE) serves as a guide to the regulated community and to local authorities and emergency services.[29]

The HSE also conducts a program which offers assistance to local planning authorities in developing planning strategies to minimize the risk to the public from hazardous facilities. Planning authorities are requested to consult the HSE before granting permission for development of a facility that could pose a major hazard (such as an HF facility.) Planning authorities are also advised to seek guidance before permitting development which caters to numbers of people (e.g. housing) near existing or proposed major hazards.

A recent example of this planning assistance can be seen in the Public Inquiry into the proposed Northwick Village Development that was to be located near an existing HF facility.[30] The HSE provided consultation and issued advice on how risk might be minimized through placement of buildings and restriction of certain types of development (e.g. schools, major shopping developments, housing for vulnerable groups of people.)

Technical Guide to the Use and Handling of Hydrogen Fluoride. "A Guide to Safe Practice in the Use and Handling of Hydrogen Fluoride" was published in 1988 by the Chemical Industries Association, a group of representatives from chemical firms in Great Britain. The guide provides instructions on a safe approach to building and operating a facility that produces or uses HF. The guide covers several topics in process safety including materials of construction, plant design, plant operation, treatment of spillage, emergency procedures, and first aid.[31]

In 1986 Great Britain established provisions to control the emission into the atmosphere of noxious or offensive substances from HF facilities in which: (1) HF is evolved either in the manufacture of liquid HF or its components; (2) mineral phosphates are treated with acid other than in fertilizer manufacture; (3) mineral phosphates are defluorinated; or (4) anhydrous HF is stored and handled in fixed tanks with an aggregate capacity exceeding one ton.[32]

Great Britain has also initiated a three-month study by the Chemical Manufacturing National Industry Group (CMNIG) to produce NIG guidance on health and safety in the large scale use and manufacture of HF. This effort will concentrate on the manufacture and use of HF in the chemical industry including alkylation plants as well as other large scale users. The results of the study will identify industry practices and identify optimum operational standards for safe use in both existing and new plants, determine problems and the potential hazards associated with HF use.[33]

4.3.3 Sweden

The Swedish Act on Chemical Products regulates the control of HF and other chemicals in Sweden. The Act is administered by the National Chemical Inspectorate which ensures that the obligations created by the legislation are fulfilled. Under Swedish law, manufacturers and importers of chemical products are responsible for providing hazard information and safety advice for those using the chemicals. In addition, there is a general obligation to take precautions to prevent *or* minimize

ED_002700_00005500-00062

harm to human beings or the environment. This obligation also includes a duty to make efforts to replace hazardous chemicals with less hazardous substitutes.

Under this law, HF is classified as an "Extremely dangerous chemical product" due both to its high toxicity and strongly corrosive effects. Even products containing low concentrations of HF receive this classification. As an "Extremely dangerous chemical product," HF is subject to severe restrictions on importation, transfer, and non-professional handling. Also, there are general restrictions on the use of HF and a permitting system which allows authorities to track the movement of HF.

Several thousand tons of HF are used in Sweden every year, primarily as a pickling agent in the metalworking industry, but also as an etching chemical in the electronics industry, and in some chemical products for cleaning and de-calcifying. Recently, it was discovered that in some cases there was misleading hazard classification information on HF-containing products (mainly those products used in cleaning and de-calcifying). As a result, proper restrictions did not apply and authorities were unable to track these HF-containing products. The Inspectorate urged these companies to substitute HF-containing products with less harmful ones. Within one year most of the products were withdrawn or had been replaced by appropriate substitutes. Alternatives are being developed and tested for the remaining HF-containing products.[34]

4.3.4 The Netherlands

The Netherlands' Effort to Develop Risk-Based Regulations. The Netherlands has developed risk-based standards to regulate industry. Government policy is aimed at developing and evaluating risk assessments to achieve effective control of environmental and safety risks. The Netherlands is applying this risk-based regulatory approach to many new and existing facilities including several facilities that use HF. In the facilities themselves, the principal focus has been increased safety through improved design and management to reduce equipment failures and human error, respectively, and by a reduced inventory to reduce the field of hazard.[35]

The Effort to Revise the Model of the Netherlands Organization for Applied Natural Science Research (TNO). The Netherlands has recently revised, updated and improved the consequence modeling techniques described in the 1979 document, "Methods for Estimating the Physical Effects of the Escape of Dangerous Materials (liquids and gases)" commonly known as the "Yellow Book." The Yellow Book provides an approach to developing a quantified consequence analysis to evaluate the safety of industrial installations using hazardous materials. The Yellow Book was developed by TNO at the request of the Directorate-General of Labour of the Dutch Ministry of Social Affairs.

The revision of the Yellow Book is part of the ongoing effort in the Netherlands to address hazardous chemicals such as HF. Two specific changes to the Yellow Book that would enhance consequence analyses for accidental releases of HF include: 1) improving the source terms for fuming liquids, and 2) updating the calculation of vapor cloud dispersion for dense gas releases. Another document published in 1990, "Methods for Calculation of Damage Resulting from the Physical Effects of Accidental Release of Dangerous Chemicals" commonly known as the "Green Book," provides a model for predicting possible damage and is also applicable to HF.[36]

4.3.5 France

In France, the National Institute of Environment and Risks analyzes risks and provides assistance in the elaboration of standards and technical regulations. Industrial groups in France have the responsibility of submitting a safety case study in support of an application for authorization of the siting and construction of an industrial plant. One particular approach or technique submitted by a petroleum refinery was developed for use in studies on refineries. This technique consists of

ED_002700_00005500-00063

developing a risk matrix and has been applied in studies carried out by various companies operating facilities in France including ARCO.[37]

In an effort related to HF safety, the Ministry of Environment has commissioned SNPE, a consulting firm, to conduct an industry-wide study on HF storage tanks with capacities greater than 50 tons. Currently there are no standards in France relating specifically to HF storage. The SNPE study will evaluate risks to the environment associated with HF storage areas, the potential safety impacts of storage areas, and will make recommendations to improve storage safety. The study involves several phases. In the first phase, which has already been completed, SNPE visited ten storage sites with 50 tons or more of HF. Of the ten sites visited, eight are HF users and two are HF producers. These storage sites are already subject to the Seveso Directive. In the second phase, which was to have been completed by March 1992, SNPE was to conduct a qualitative study of general hazards associated with HF, consisting of an analysis of the risks attendant to the hazards, and a summary of accident scenarios and consequences. In the third phase, which was to have been completed by April 1992, SNPE was to make recommendations on concepts and principles for safe operation and safety equipment. An interim report was scheduled for completion by the end of March 1992.[38]

The ELF petroleum company recently evaluated the possible use of HF alkylation in Lyon, France, in a refinery, but decided that an H_2SO_4 alkylation unit would pose less overall risk to the public in that location. The French government also had serious reservations regarding an HF alkylation unit at that location. ELF has a second project involving either an HF or H_2SO_4 alkylation unit under consideration for Marseilles in an industrial zone. If the facility uses H_2SO_4, an acid regeneration plant would be needed and the closest acid regeneration plant is in Belgium. The risk of transporting large quantities of H_2SO_4 is currently being discussed.[39]

In a study of HF alkylation, ELF is studying how to protect HF-containing vessels from fire by:

- examining the quality of materials for exterior coverings and their resistance to fire;
- determining the best methods and standards for control (in conjunction with Ministry of Industry); and
- conducting in situ trials with fire on tanks uncovered as opposed to those covered.

These results may be presented at a loss prevention symposium in Italy. ELF has also participated in HF spill tests in Nevada.[40]

Elf Aquitaine (ELF) has developed a proprietary mathematical model which contains enhanced HF dispersion modeling capabilities. The Aide a' la Gestion Industrielle des Risques (AGIR) model is used at about a dozen industrial sites in Europe.[41]

4.3.6 Canada

Life-Cycle Management of Toxic Chemicals - Hydrofluoric Acid (HF) As a Case History. An approach used by Canada to manage toxic substances is the development of a comprehensive project to manage chemicals throughout their life-cycle. The Major Industrial Accidents Council of Canada (MIACC), a committee of government and industry representatives, and the Canadian Chemical Producers Association (CCPA), are developing a comprehensive project for life-cycle management of hazardous chemicals. The project initially has concentrated on safety and management of material handling. It attempts to coordinate previous efforts to address individual components of the life-cycle (e.g., processing, storage, disposal) and combines these efforts into a

ED_002700_00005500-00064

comprehensive management plan. This life-cycle approach is the foundation of the Canadian Environmental Protection Act (CEPA) of 1988 and the CCPA's Responsible Care Codes of Practice.

To provide a forum for sharing information about hazardous chemicals management, a workshop was held on January 24, 1991 in Toronto. Hydrogen fluoride was selected to be the focus of the workshop and to be the first case study in the life-cycle management project. During the workshop, the following seven life-cycle stages of chemicals were evaluated: research and development, introduction to the marketplace, manufacture, transportation, distribution, use, and disposal. The workshop examined the profile of the Canadian HF industry, manufacturing management systems and practices for HF, accident history, the health properties of HF, a production overview and a review of transportation practices and primary uses of HF. At the conclusion of the workshop, the participants identified specific HF safety issues and made several recommendations. The next step for the HF life-cycle management project will be the drafting of a generic management framework for all hazardous materials followed by additional workshops on specific chemicals such as chlorine in order to validate the framework.[42]

Canadian Technical Manual for HF Problem Spills. In 1984, a manual entitled, "Hydrogen Fluoride and Hydrofluoric Acid - Environment and Technical Information for Problem Spills" was published. It is one of a series developed by Environment Canada's Environmental Protection Service to provide comprehensive Information on chemicals that are frequently spilled in Canada. These manuals have been developed for many chemicals and are intended to be used by spill specialists for designing countermeasures for chemical spills and to assess their effects on the environment. The manual on HF contains technical information on commerce and production of HF, material handling and compatibility, contaminant transport, environmental data, human health hazards, chemical compatibility, countermeasures, previous spill experience and analytical methods for detecting and measuring levels of HF.[43]

Draft Canada-U.S. Joint Inland Pollution Contingency Plan. Canada and the United States are currently developing a response plan for releases of hazardous materials which pose a threat. HF may be one of the chemicals covered by the response plan, Under the plan there would be Joint Response Teams on both the regional and Federal levels. These response teams would facilitate response efforts in the event of a release.

4.3.7 Mexico

Joint United States of America-United Mexican States Contingency Plan for Accidental Releases of Hazardous Substances Along the Border. The United States-Mexico Joint Contingency Plan for accidental spills and releases of hazardous substances, pollutants, or contaminants along the border provides a significant framework for cooperation between the United States and Mexico in the case of a polluting incident. The plan applies to all pollution incidents along the inland border within an area 100 kilometers on either side of the Inland International Boundary. The objective of the plan is to aid in the development of preparedness, reporting, and monitoring measures. In the event of a release of a hazardous substance, such as HF, the chairs of the Joint Response Team would be notified so that proper response action can be taken promptly.

Mexican Buffer Zone Surrounding Hazardous Chemical Plant Sitings. In response to concern about residential developments near hazardous chemical plants, Mexico prohibits the construction of new residential buildings within a 1.2 kilometer zone of facilities which use hazardous chemicals, including HF.

ED_002700_00005500-00065

4.3.6 Other International Efforts

There are a number of other international efforts aimed at regulation of hazardous substances such as HF. Norway has done work on risk-based standards, including promulgating new regulations for the petroleum industry based on risk assessment with acceptance criteria to be proposed by facility owners. Belgium is currently in the process of developing risk-based standards similar to those applied in the Netherlands. In Denmark, qualitative and quantitative methods can be used but without prescriptive acceptability criteria. Greece is working on legislation. In the consideration of granting of permits for the installation of new plants, Germany requires that incremental as well as the total emission values be calculated if the air emissions of HF and gaseous inorganic fluorides exceed 1 kg/hr. Italy has implemented the Seveso Directive but has not used quantitative risk criteria. Portugal is in the early stages of development of a risk-based regulatory methodology. Spain, as a member of the European Community, is required to develop an approach under the Seveso Directive, but has not yet done so.[44] Western Australia, Victoria, New South Wales, and Hong Kong have risk-based criteria for all hazardous material handling facilities in place.[45]

4.3.9 International Information Exchange

The International Conference on Vapor Cloud Modeling. The International Conference on Vapor Cloud Modeling serves as a worldwide information exchange for sharing data on spill testing. It is sponsored by the Center for Chemical Process Safety of the American Institute of Chemical Engineers, The Health and Safety Executive of the United Kingdom, and the United States Environmental Protection Agency. This conference provides a forum for presentation of the latest research on vapor cloud modeling and mitigating the consequences of accidental releases. Hydrogen fluoride has been a focus of several papers at this conference. Research topics have included the modeling of HF releases, the modeling of water spray effectiveness on releases, and the chemistry of mixing anhydrous HF with moist air.

ED_002700_00005500-00066

ENDNOTES

1. "Performance-Oriented Packaging Standards; Changes to Classification, Hazard Communication, Packaging and Handling Requirements Based on U.N. Standards and Agency Initiative, Final Rule," *49 CFR Part 107, et. al.,* Department of Transportation Research and Special Programs Administration. (139.9)

2. O'Steen, James K., Office of Hazardous Materials Technology, U.S. Department of Transportation, comments from technical review of Hydrogen fluoride Study, *Report to Congress,* Draft May 8, 1992, June 12, 1992. (366)

3. U.S. Department of Transportation, *1990 Emergency Response Guidebook,* Research and Special Programs Administration, U.S. Department of Transportation, Document Number DOT P5800.5. (489.87)

4. Delaware Department of Natural Resources and Environmental Control, *Regulation for the Management of Extremely Hazardous Substances,* Division of Air and Waste Management, September 25, 1989. (550)

5. New Jersey Department of Environmental Protection, *Toxic Catastrophe Prevention Act,* Division of Environmental Quality, June 20, 1988. (560)

6. Lercari, Frederick, A., *State of California Guidance for the Preparation of a Risk Management and Prevention Program,* California Office of Emergency Services, Hazardous Material Division, November 1989. (540)

7. Nevada State Division of Environmental Protection, Adopted Regulation of the Division of *Environmental Protection of the Department of Conservation and Natural Resources,* May 21, 1992, LCB File No. R078-92. (362.8)

8. Letter, *HF Production and Use in* Texas, From: Sam Crowther, Texas Air Control Board, To: Fred Millar, Friends of the Earth, August 17, 1992. (334b)

9. Panketh, Joseph, K. Horne, K. Neumann, and S. Keil, Case Studies of Texas Air Control *Board: Permit Reviews in which Potential for Catastrophic Releases Was Considered,* Texas Air Control Board, Austin, TX, October 1986. (471)

10. Du Pont Chemicals, *Du Pont's La Porte, Texas Plant's Disaster Scenarios, Air Permit Submitted to TACB-1997,* Wilmington, DE, 1991. (139)

11. Hofman, Hazel, Shahid Khan, Chris Marlia, and David Yeh, Supporting Document for Proposed *Rule 1410: Hydrogen Fluoride Storage and* Use, South Coast Management District, CA, March 19, 1991. (170)

12. Kurata, Susan, and Steve Smith, *Final Environmental Assessment for Proposed Rule 1410: Hydrogen Fluoride Storage and Use,* South Coast Management District, April 2, 1991. (290)

13. Hofman, Hazel.

14. Morris, Jeff, American Petroleum Institute, Fina Oil and Chemical Company, comments from technical review of *Hydrogen Fluoride Study, Report to Congress,* Draft May 8, 1992, June 1, 1992. (344)

ED_002700_00005500-00067

15. Technica Inc., *Quantitative Risk Assessments of Generic Hydrofluoric Acid and Sulfuric Acid Alkylation Units for Phillips Petroleum Company, Management Summary,* May 1990. (420)

16. Quest Consultants, Inc., *Sulfuric Acid Aerosoling,* Norman, Oklahoma, October 12, 1992. Document Number: 92-10-6065. (395)

17. Puschinsky, Bob, Alkylation Technologies and Sulfuric Acid Production Consulting, comments from technical review of *Hydrogen Fluoride Study, Report to Congress,* Draft May 8, 1992, June 28, 1992, p 9-10. (377)

18. Rabin, Jeffrey L., Torrance Asks Court to Declare Refinery a 'Public Nuisance',' *Los Angeles Times,* April 8, 1989, p 1. (421.4)

19. Cole, T.D., Mobil Oil Corporation, comments from technical review of *Hydrogen Fluoride Study, Report to Congress,* Draft May 8, 1992, June 4, 1992. (126)

20. Superior Court of the State of California For the County of Los Angeles, *Consent Decree,* "People of the State of California v. Mobil Oil Corporation,"October 19, 1990. (370.4)

21. Commission of the European Communities, *Council Directive 82/591/EEC of 24 June 1982 on* the *Major Accident Hazards of Certain industrial Activities, Substances Officially Classified to Date in the European Communities Which Enter Into the Scope of Part II Annex II and Amendments,* June 1990. (132)

22. The World Bank, *Manual of Industrial Hazard Assessment Techniques,* Office of Environmental and Scientific Affairs, October 1985. Prepared by Technica LTD, London. (328.5)

23. The World Bank, *World Bank and IFC Guidelines for Identifying, Analyzing and Controlling Major Hazard installations in Developing Countries,* Draft, Office of Environmental and Scientific Affairs, Projects Policy Department, Washington, DC, February 1985. (530b)

24. European Technical Industry Council (CEFIC), code of industry recommendations for the European hydrogen fluoride industry, European Technical Committee on Fluorine (Comite Technique Europeen du Fluor), Brussels, Belgium. (130.17)

25. United Nations Environmental Programme, *APELL: Awareness and Preparedness for Emergencies at Local Level, A Process for Responding to Technological Accidents,* Industry and Environment office, Paris, France, 1988, Document Number: E.88.III.D.3. (467.8A)

26. Organisation for Economic Co-operation and Development, *Guiding Principles for Chemical Accident Prevention, Preparedness and Response,* Paris, France, 1992. (369.1)

27. *Convention on the Transboundary* Effects *of industrial Accidents,* United Nations, (135.9)

28. Mudan, Krishna S., Technica Inc., comments from technical review of *Hydrogen Fluoride Study, Report to Congress,* Draft May 8, 1992, June 1, 1992, p 3. (360.2)

29. *A Guide to the Control of industrial Major Accident Hazards Regulations 1984,* Health and Safety Executive, Her Majesty's Stationery Office, London, England. (146)

30. *Public Inquiry into the Proposed Northwick Village Development,* Applications by Aldersgate Developments Ltd to Castle Point District Council, Proof of Evidence Submitted by the Health and Safety Executive, October 1990. (374)

31. Chemical Industries Association, *Guide to Safe Practice in the Use and Handling of Hydrogen Fluoride,* London, England, 1988. (147)

32. Chemical Industries Association,

33. Workplan for the *Hydrogen Fluoride Project,* Great Britain, received from Craig Matthiessen, US. Environmental Protection Agency. (515)

34. Letter, From: Lolo Heijkenskjold, National Chemicals Inspectorate, Solna, Sweden, To: Craig Matthiessen, US. Environmental Protection Agency, Washington, DC, November 11, 1991. (281)

35. Mudan, Krishna S., Technica Inc.

36. *Proposal of the Project* "Yellow *Book Plus,"* TNO Prins Maurits Laboratory, The Netherlands. (410)

37. *Detailed Meeting Notes From the Hydrogen Fluoride Roundtable,* ICF Inc., Fairfax, VA, November 15, 1991. (135)

38. Personal Communication, Conversation with Bruno Lequime, SNPE, France, February 11, 1992. (468.7)

39. Personal Communication, Conversation with Georges Marlier, ELF, France, February 6, 1992. (468.9)

40. Personal Communication, Conversation with Georges Marlier.

41. Laumer, John and Harold Lamb, Elf Atochem North America Inc., comments from technical review of *Hydrogen Fluoride Study, Report to Congress,* Draft May 8, 1992, June 4, 1992. (290.8)

42. Shrives, John, and Wayne Bissett, *Life-Cycle Management of Toxic Chemicals- Hydrofluoric Acid (HF) as a Case History,* Environment Canada, Prevention Division Environmental Emergencies Branch. (440)

43. Environment Canada Environmental Protection Service, *Hydrogen Fluoride and Hydrofluoric Acid, Environmental and Technical Information for Problem Spills,* Technical Services Branch, Ottawa, Ontario, July 1984. (220)

44. Ultramar Inc., *Quantitative Risk Assessment of the HF Alkylation Unit,* Wilmington, CA, January 1992. Prepared by Science Applications International Corporation, McLean, VA. (489.85)

45. Mudan, Krishna S., Technica Inc.

ED_002700_00005500-00069

5. PROCESS DESCRIPTIONS OF HYDROGEN FLUORIDE INDUSTRY

This chapter discusses the operations and processes currently used to produce, transport, and store HF; the production of other chemicals from HF; and other uses of HF.

5.1 HF Manufacture

HF use is reported as early as the seventeenth century when fluorspar and acid were used to etch glass.[1] In 1856, the first synthesis of anhydrous HF was reported. However, the chemical was commercially manufactured only as the aqueous solution in concentrations of 38 percent or lower until 1931, when Sterling Products Company shipped the first bulk quantities of anhydrous HF.

The two major U.S. producers of HF use slightly different manufacturing processes. One producer uses a rotary kiln and the other uses a pre-reactor vessel with a reactor tube. Although the specifics of the processes are considered proprietary, enough information is known to provide a general description of both. The chemistry, processes, and hazards of HF production are described below.

5.1.1 Chemistry of HF Manufacture

HF is synthesized from calcium fluoride (CaF_2) and sulfuric acid (H_2SO_4 according to the following chemical equation:

$$CaF_2(solid) + H_2SO_4(liquid) \xrightarrow{heat} 2HF(gas) + CaSO_4(solid)$$

Calcium fluoride is derived from the mineral fluorspar. Acid grade fluorspar is 97 percent calcium fluoride or greater. Sulfuric acid in concentrations between 93 and 99 percent is typically used in the manufacture of HF. The more dilute concentrations of sulfuric acid, however, are more corrosive to the reactors and may lead to the formation of HF solution rather than HF gas. Typically, a slight excess of sulfuric acid over fluorspar is used. The final product may be distilled to a purity of 99.98 percent HF.[2]

5.1.2 Manufacturing Process

A generalized flow diagram of both the kiln and the pre-reactor/reactor tube manufacturing processes is shown in Exhibit 5-1. Fluorspar, received by an HF manufacturing facility in bulk quantities, is stored in warehouses or silos, or it can be stored outside. The first step in the HF manufacturing process is fluorspar drying: the fluorspar is generally heated in a kiln to remove excess water which can cause corrosion during the manufacturing process. The heating decreases the water content of the fluorspar to as low as 0.03 percent[3] Heated fluorspar passes through a second kiln for cooling and is then ground to a fine dust or powder.

The second reactant, sulfuric acid, is frequently manufactured at the facility where HF is produced. Oleum, a mixture of sulfuric acid and sulfur trioxide (SO_3), can be mixed with water to form sulfuric acid at the appropriate concentration. At this point, the two HF manufacturing processes differ somewhat.

ED_002700_00005500-00070

EXHIBIT 5-1
Hydrogen Fluoride Manufacturing Processes

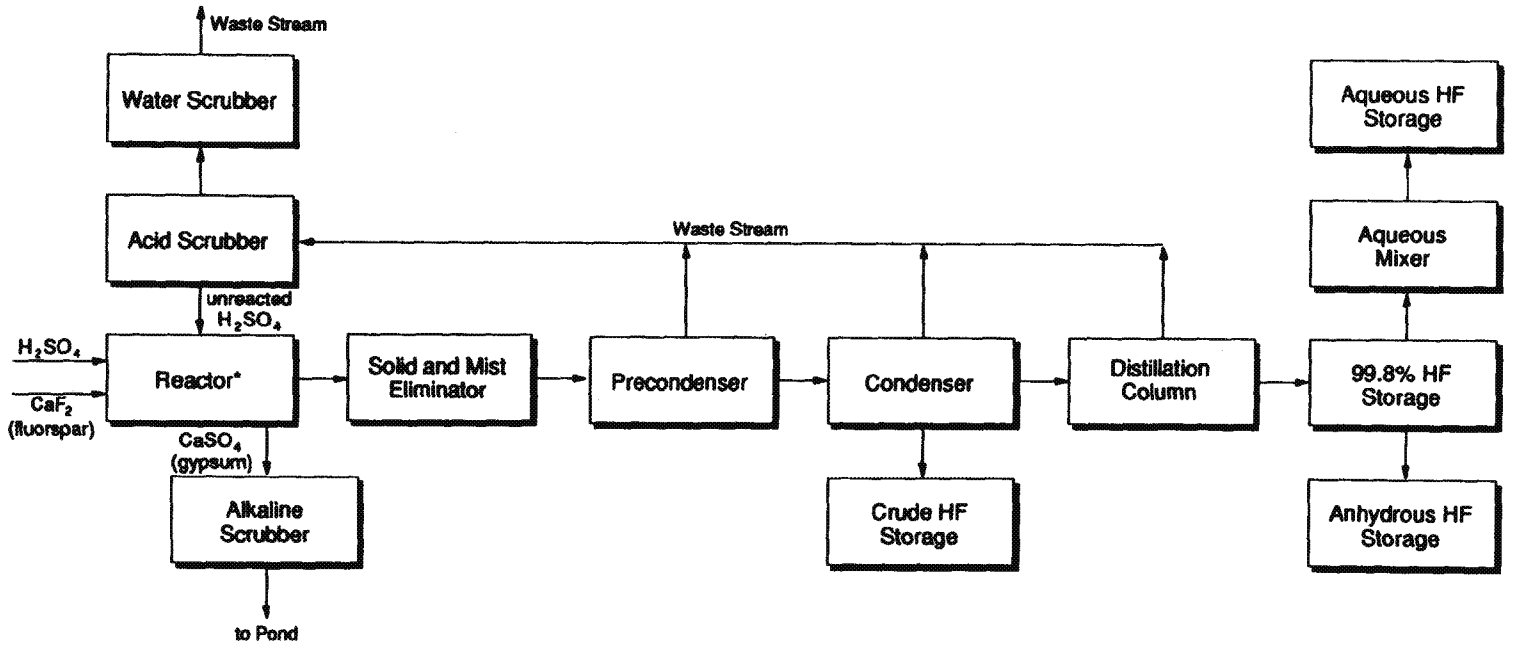

* Process may use either kiln reactor or pre-reactor/reactor tube

Source: U.S. Environmental Protection Agency, Office of Air Quality Planning and Standards, *Prevention Reference Manual: Chemical Specific Volume 8: Control of Accidental Releases of Hydrogen Fluoride,* Research Triangle Park, NC, August, 1987, Document Number EPA-600/8-87-034h. Prepared by the Air and Energy Engineering Research Laboratory, (400) modified as per Seringer, Carolyn S., Du Pont Chemicals, comments from technical review of *Hydrogen Fluoride Study, Report to Congress,* Draft May 8, 1992, June 5, 1992. (438.4)

ED_002700_00005500-00071

In the kiln manufacturing process, HF is produced by the reaction of fluorspar with sulfuric acid in a horizontal, rotating, cylindrical reactor kiln which is externally heated by natural gas or fuel oil. A typical HF facility uses an air tight rotary kiln. The fluorspar is conveyed to the reactor through weigh bins. The concentrated sulfuric acid is sprayed onto the fluorspar. A screw conveyor facilitates the mixing of the reactants as they pass slowly through the kiln. The fluorspar-sulfuric acid mixture has a residence time in the kiln of between 30 minutes and one hour at a temperature between 200 and 250°C. Temperature in the kiln is maintained as low as possible to minimize the corrosive effects of the reactants and products. The gaseous HF is removed at the feed end of the kiln. The entire process is kept under vacuum to help pull off the product gases and to promote HF production. Additionally, the vacuum maintained in the process and the specially designed kiln seals help to prevent fugitive emissions of HF.[4] A major solid byproduct of the reaction, calcium sulfate, is removed from the opposite end of the kiln.[5]

The other process for HF manufacture is very similar to the above except the heat is provided internally in the reactor by the addition of SO, and steam. This also adds part of the sulfuric acid by the reaction:

$$SO,+H_2O(steam) - H_2SO_4+heat$$

Hence, no fossil fuel is necessary to provide the heat of reaction.[6] The temperature at the entrance to the reactor tube is 380°C and the residence time is several hours. Similar to the kiln process, the entire pre-reactor/reactor process is kept under vacuum to help draw away the product gases and to promote HF production. Additionally, the vacuum helps to prevent fugitive emissions of HF.

In both of the processes, the gaseous products are HF, water, sulfur dioxide (SO,), silicon tetrafluoride (SiF_4), and sulfuric acid. The solid byproduct, calcium sulfate (or gypsum), is removed through an airlock into a water sluiceway, where it is slurried with water and neutralized. The gypsum is then passed to a drying bed or pond.

The gaseous products from the kiln process or the pre-reactor/reactor process are first cleansed of entrained solids and acid mist and then fed to a series of precondensers and condensers, The precondensers remove any high boiling impurities such as sulfuric acid and water from the HF product stream. Liquid drips (e.g., unreacted sulfuric acid) from the precondensers are eventually recycled to the kiln or pre-reactor. Other condensates are piped to a series of scrubbers and discarded through normal effluent waste streams. The precondenser also serves to cool the gas stream before it is condensed.

Gases remaining after the product stream has passed through the precondensers flow to a condenser where the HF is liquefied by cooling. The majority of the remaining HF is recovered by absorption in H_2S0_4 which is in turn recycled to the process[7] Other gases, consisting mostly of fluosilicates, do not condense and are vented to acid scrubbers. The resulting fluosilicic acid can be recovered and sold commercially. The crude HF is then piped to an intermediate storage facility.

To make high grade HF (99.98 percent pure), the crude liquid HF is reboiled and distilled. The distillation process is used to remove any unwanted impurities by heating the HF to its exact boiling point and collecting its condensate. The distillation process is carried out under pressure so that the HF will boil at higher temperature so water can be used to provide cooling for the condensation. Lower pressure would require refrigerated cooling. Impurities from the distillation process including SO,, SF,, water, and sulfuric acid are sent to acid scrubbers and to water scrubbers and are then removed through normal waste streams. Potential emissions of HF from the

ED_002700_00005500-00072

HF condensers or distillation columns are directed to the acid scrubber. A second counter-current scrubber is used to scrub any HF remaining.[8]

After distillation, anhydrous HF liquid may be sold or used on-site as a feedstock for some other process such as production of chlorofluorocarbons (CFCs) or aluminum fluoride, or to produce various concentrations of aqueous HF.

In addition to producers of anhydrous HF, there are several other types of facilities that process, repackage, and/or redistribute HF for certain use markets. For example, some chemical companies purify and dilute anhydrous HF for use in the electronics industry. Some companies combine HF with other acids for applications such as cleaning. A substantial portion of aqueous HF is marketed through chemical distributors as drummed or packaged product. Also, significant quantities of drummed 70 percent HF are imported from Mexican and off-shore sources.'

To prepare aqueous HF, anhydrous HF passes through an aqueous mixer. Water is added as needed to prepare the desired concentrations of HF which are then stored on site in specially designed alloy tanks.[10] Electronic grade HF (usually 49 percent aqueous HF) is produced by purifying anhydrous HF in a gaseous separation process. In this process, purified HF vapor is absorbed in a column supplied with deionized water. The aqueous HF product from the column is cooled and stored in tanks. Inert gases vented from the column are cleaned in a scrubber before being discharged to the atmosphere.[11]

To mix HF with additives to make a new wholesale product, liquid HF is received in drums and is pumped, along with other acids, water, or other chemicals to a batch mixing tank. Acid mix is then manually packaged in polyethylene bottles or drums. The distributor may store the packaged HF product in a warehouse before shipment to a customer.

5.2 Transportation and Storage

5.2.1 General

The major HF producers, Du Pont and Allied-Signal, transport HF to users across North America mainly by rail car or by tank truck. In 1987 approximately 274,000 short tons of HF were shipped in bulk in the U.S.[12] Bulk shipments (rail or truck) of HF are limited mainly to anhydrous HF and 70 percent aqueous HF. Aqueous HF in concentrations below approximately 60 percent are too corrosive to be compatible with steel[13]

Anhydrous HF is commonly transported in specially designed steel rail tank cars and tank trucks. Rail tank cars in common use for anhydrous HF have capacities of approximately 20 to 91 tons. Tank trucks used for anhydrous HF typically have capacities of up to 20 tons. Anhydrous HF in smaller quantities may be shipped in cylinders of various sizes. Anhydrous HF is shipped under its own vapor pressure as a liquid because of its relatively low boiling point and high vapor pressure. Aqueous HF (concentration 70 percent) is also shipped in rail tank cars with capacities of 32 to 80 tons and tank trucks with capacities up to 20 tons. Aqueous HF may be shipped in polyethylene-lined drums and polyethylene carboys. Aqueous HF is not generally transported under pressure. Appendix XI presents DOT container specifications for HF.

5.2.2 Loading and Unloading Procedures

Facilities can use two methods to unload HF from a tank truck or rail car to a storage tank. Compressed gas (e.g., nitrogen) or a pump can be used to move the HF from one container to another. Trained, professional drivers dedicated to HF transport from both Allied-Signal and Du Pont conduct unloading with varying degrees of involvement from employees at receiving facilities. The HF

ED_002700_00005500-00073

producers also have dedicated fleets of tank cars and tank trucks that are equipped with vapor valves, liquid valves, and relief valves (see Appendix XI). The tank car or tank truck is connected to the storage tank by flexible hoses provided by the HF transporter or the receiving facility.

In the compressed gas method, pressurized nitrogen is normally used. For unloading anhydrous HF, the compressed gas used by the facility must have a very low moisture content to prevent the formation of hydrofluoric acid which is highly corrosive. Maximum pressures for nitrogen are typically between 80 and 100 psi. Prior to nitrogen-pressurized HF unloading, all connections are checked for leaks when the valves are opened. In the unloading of a tank car, the liquid HF valve to the storage tank is opened and the nitrogen flow to the tank car is started. To transfer the HF, the tank car is at a pressure approximately 25 psi higher than the storage tank. The higher pressure is maintained by venting HF gas from the storage tank to an acid absorption system. Exhibit 5-2 shows a typical unloading operation using compressed gas. When unloading is complete, the line to the storage tank is cleared with nitrogen.[15]

Exhibit 5-3 shows a typical pump unloading operation. During pump unloading, the piping and flexible hose may be under vacuum. However, some facilities provide a small amount of dry pressurized nitrogen gas to prime the pump and to prevent a vacuum from developing in the tank car. For pump unloading, HF vapor from the top of the storage tank may be vented back into the tank car so that a pressure equilibrium is maintained. Pumps may be centrifugal, rotary, positive displacement, or sealless types.

5.2.3 Facility Storage

Anhydrous HF is usually stored under ambient conditions in pressure vessels like cylinders or tanks because of its high vapor pressure. Anhydrous HF may also be stored under refrigeration, which reduces its vapor pressure. Bulk storage vessels for HF are usually single walled horizontal storage tanks ranging in capacity from 6,000 to 8,000 gallons to as large as 250,000 gallons or spheres with capacities up to 500,000 gallons.[16,17]

5.3 Fluorocarbon Production

The largest use of HF is in the manufacture of chlorofluorocarbons, hydrofluorocarbons, and hydrochlorofluorocarbons (i.e., CFCS, HFCs, and HCFCs). Virtually all modern air conditioning and refrigeration equipment is designed exclusively for fluorocarbon refrigerants. These chemicals are also used as solvents, sources of raw material for production of fluoroplastics, anesthetics and fire extinguishing agents.[18]

CFCs and HCFCs are produced by reacting anhydrous HF with chlorinated hydrocarbon in the presence of a catalyst. A specific chlorinated hydrocarbon is used to produce a specific CFC or HCFC (e.g., carbon tetrachloride is used to produce CFC-11 and -12 and chloroform is used to produce HCFC-22). A typical schematic of a CFC or HCFC manufacturing process uses a liquid phase reaction shown in Exhibit 5-4. HF and the specific chlorinated hydrocarbon are pumped into a heated vessel in the presence of a catalyst, The catalyst is typically antimony pentachloride. Although the fluorination step is slightly exothermic, the overall reaction is endothermic requiring additional heat to reach high conversions. Typical operating conditions in the catalytic reactor are temperatures between 21 and 38°C and pressures between 115 and 265 psi. The reaction goes nearly to completion and leaves little unreacted HF. The crude CFC vapors from the reactor are fed directly to the enriching column to purify the gas products by returning the underfluorinated material back to the reactor.

ED_002700_00005500-00074

EXHIBIT 5-2
Nitrogen Unloading of HF from Tank Truck

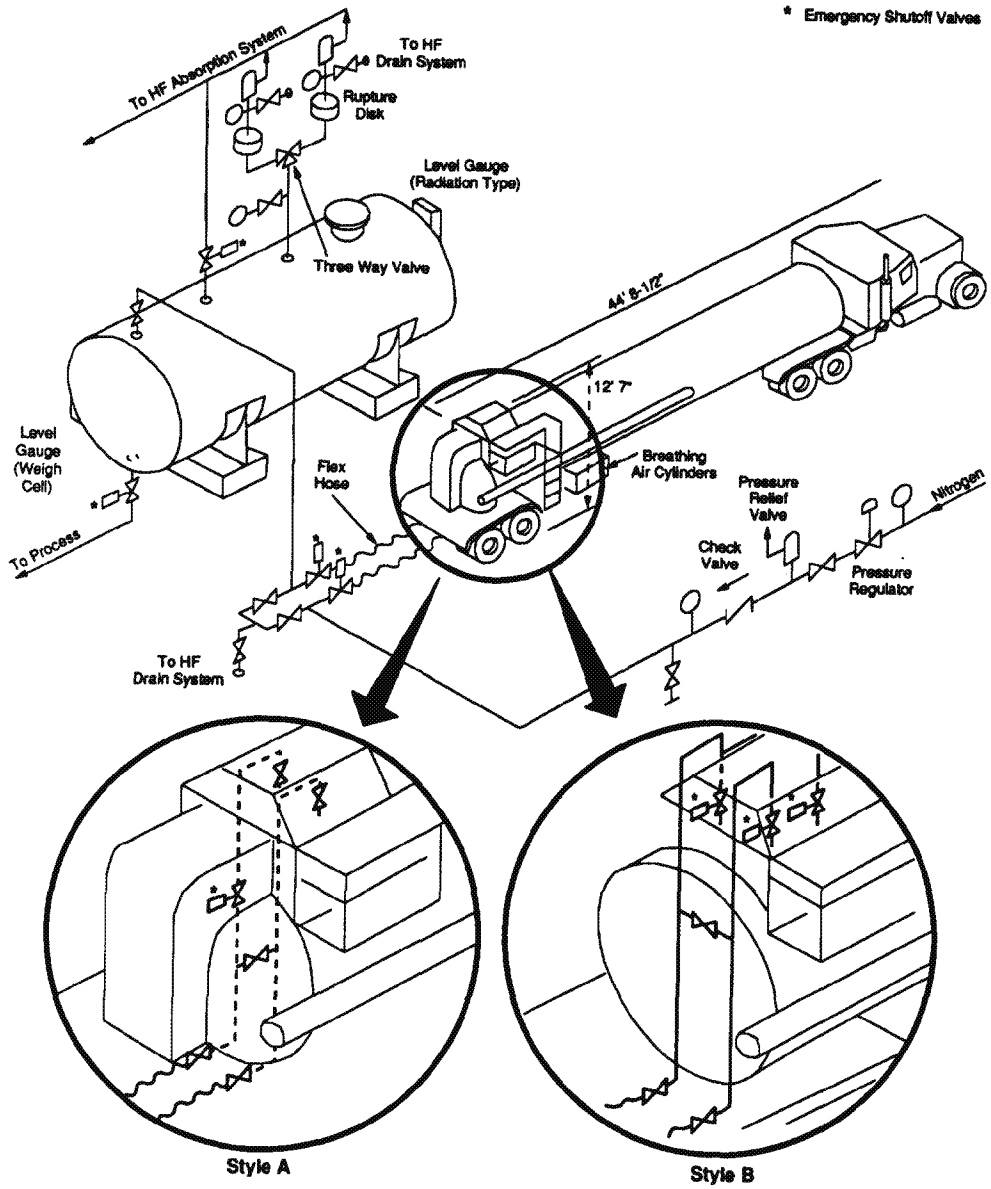

Source: Du Pont Chemicals, *Hydrofluoric Acid, Anhydrous Technical: Properties, Uses, Storage and Handling, Wilmington, DE.* (137.5)

ED_002700_00005500-00075

EXHIBIT 5-3
Pump Unloading of HF from Tank Car

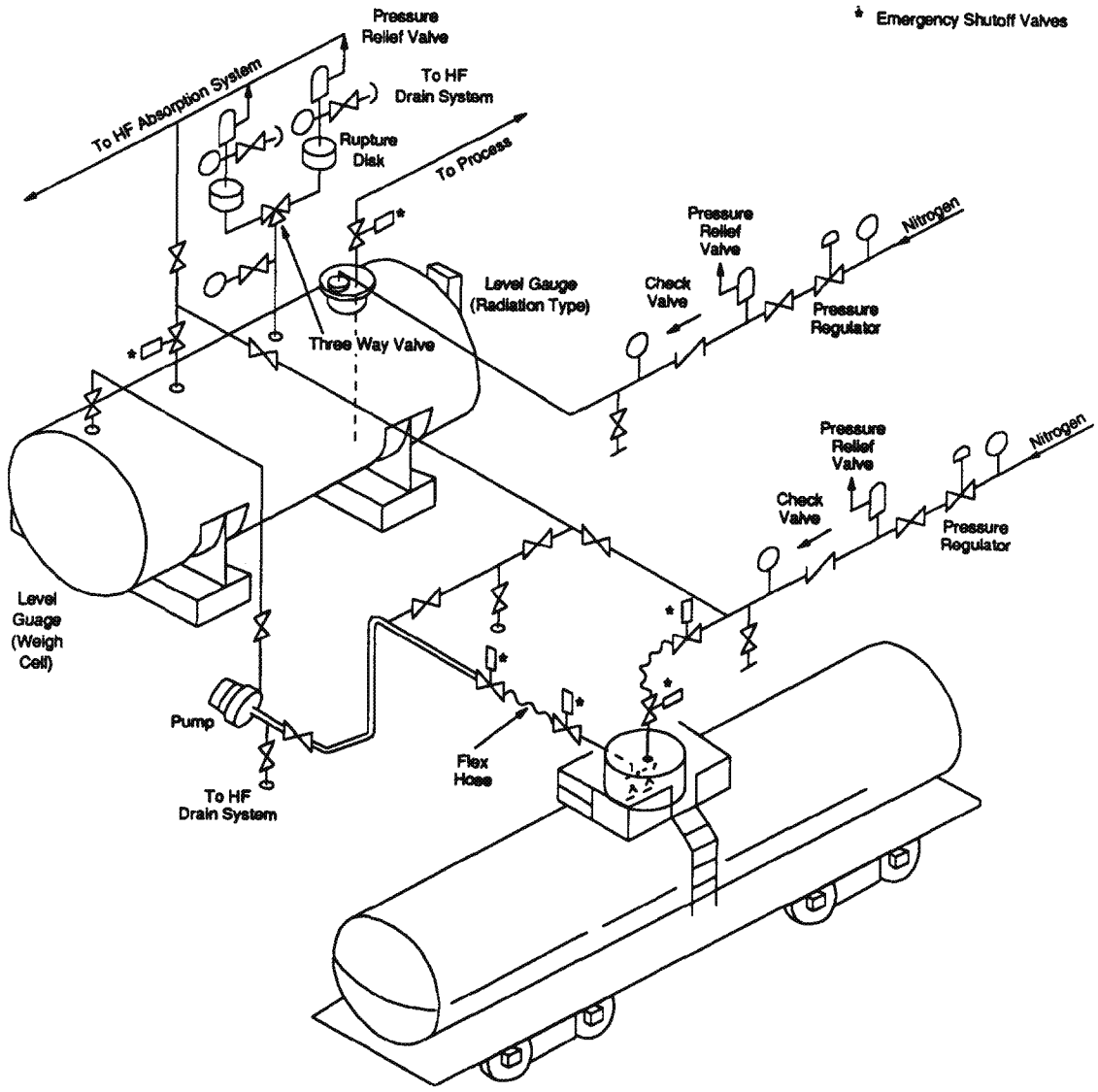

Source: Du Pont Chemicals, *Hydrofluoric Acid, Anhydrous - Technical: Properties, Uses, Storage and Handling, Wilmington, DE.* (137.5)

EXHIBIT 5-4
CFC Manufacturing Process

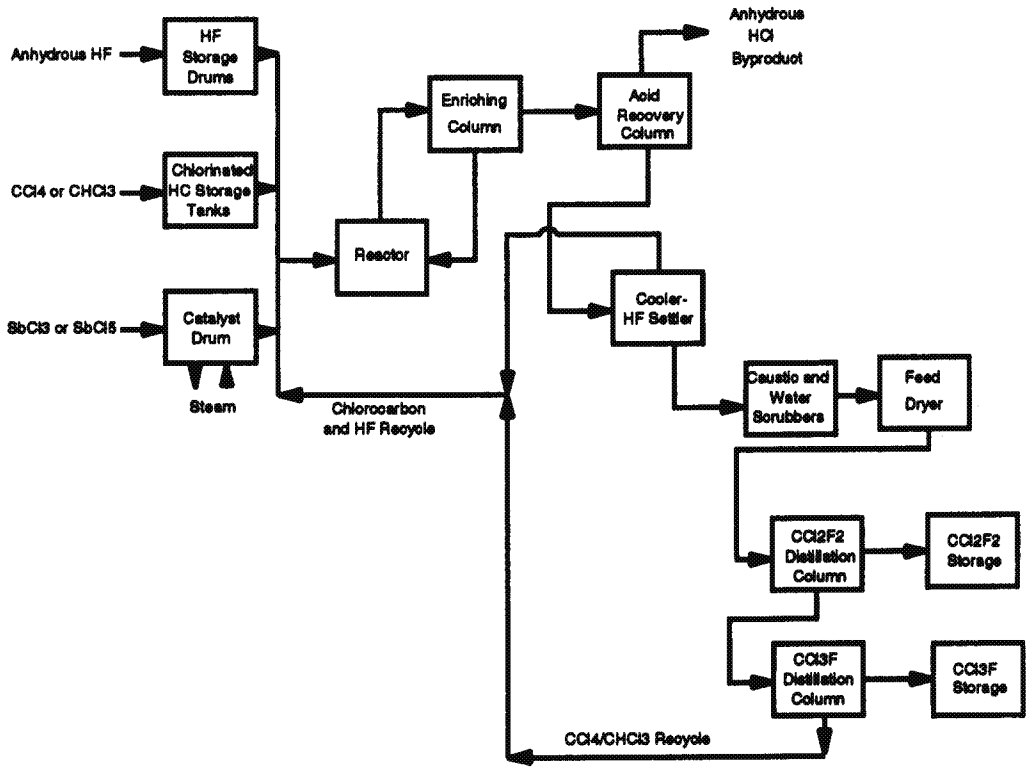

Sources: U.S. Environmental Protection Agency, Office of Air Quality Planning and Standards, *Prevention Reference Manual: Chemical Specific Volume 8: Control of Accidental Releases of Hydrogen Fluoride,* Research Triangle Park, NC, August, 1987, Document Number EPA-600/8-87-034h. Prepared by the Air and Energy Engineering Research Laboratory, (400) modified as per Seringer, Carolyn S., Du Pont Chemicals, comments from technical review of *Hydrogen Fluoride Study, Report to Congress,* Draft May 8, 1992, June

ED_002700_00005500-00077

After purification, the product stream containing hydrogen chloride, HF, and CFC is sent to an acid recovery column, typically operating at 115 to 265 pounds per square inch. Hydrogen chloride is concentrated at the top of the column and is recovered as a by-product. The bottom contains the CFC products and residual HF. The HF is removed in an HF settler and it is recycled to the reactor system. The mutual solubility of HF and the CFCs is temperature dependent, often requiring temperature as low as -30% for separation. Trace acidic impurities are removed from the CFC products by scrubbing with water and dilute caustic solution. After scrubbing, the product stream is dried and fractionated into various CFC products.

HCFC and HFC alternatives are produced through various routes which are different from and more complex than CFC production, Routes to HFCs proceed through CFC or HCFC intermediates. They require approximately three times the HF per pound produced versus the CFCs they are replacing. There are several potential HCFC and HFC products being developed. Because HCFCs contain some chlorine (they have 95 to 98 percent less ozone depletion potential than the CFCs being phased out), they are recognized as being transitional substitutes, and may be phased out early next century. HFCs however, are seen as long term substitutes that can be used in equipment that was developed to use CFCs. There is a strong likelihood that the HFCs may be used well into the next century. For this reason, HF may be needed to manufacture these compounds.[19]

5.4 Alkylate Production for Gasoline

Perhaps the most highly publicized and controversial use of HF is as a petroleum refining catalyst in the production of gasoline blending components. Alkylate is an extremely valuable gasoline component due to its high octane and low vapor pressure. It constitutes approximately [11] percent of the gasoline pool.[20] Octane is a measure of the anti-knock characteristics of a fuel when burned in an internal combustion engine. Higher octane results in less engine wear and more efficient engine performance as a result of higher compression ratios. The branched structure of alkylate is responsible for its high-octane rating. The low vapor pressure of alkylate is a valuable property to the refiner because it allows the blending of higher vapor pressure butanes (and pentanes during certain times of the year) to adjust gasoline vapor pressure to specifications.

In addition, alkylate is the major component of gasoline produced for use in piston engine aircraft. Alkylate is the only available blendstock that allows the refiner to meet the high octane and paraffin requirements of aviation gasoline. Alkylate has also provided a means for producers to reduce the lead content of aviation gasoline, and any future move to lead-free aviation gasoline will increase its importance.[21]

In the alkylation process, three- and four-carbon light olefins (ie., propylenes and butylenes) are typically charged from the Fluid Catalytic Cracker (FCC) and a coker, if present in the refinery, and are then reacted with isobutane in the presence of an acid catalyst to produce branched, seven- to eight-carbon paraffins, collectively known as alkylate[22] The olefin feedstock may also contain amylenes (five-carbon olefins). In this case, nine-carbon alkylate components will also be produced. Alkylate components have boiling points in the gasoline boiling range. Commercially, HF and sulfuric acid are currently the only alkylation catalysts available. The alkylation catalyst serves to speed reaction times and facilitate less severe reaction conditions. A small amount of catalyst, however, is consumed as the result of undesirable side reactions.

In the past, organic lead compounds such as tetraethyl lead were added to gasoline to improve octane. As lead was phased out due to environmental concerns regarding its toxicity, gasoline blending components from the catalytic reforming (reformate) and alkylation processes became more important for octane contribution. Reformate contains aromatics (benzene, toluene, and xylene), whereas alkylate contains no aromatics. The Clean Air Act Amendments of 1990 have established limits on the aromatic content of gasolines due to toxicity concerns, as well as limits on

ED_002700_00005500-00078

volatile organic compounds (VOCs), such as light olefins and butanes, due to their tendency to contribute to ozone formation. Light olefins and isobutane are converted to alkylate in the alkylation process. Thus, the alkylation process reduces light components from the gasoline pool.[23] As a result of gasoline reformulation requirements, refiners are increasingly reliant on alkylate as a gasoline blending component.

Alkylation units are the major primary means of conversion of light olefins produced in FCC units to liquid gasoline blending components. Oxygenates such as methyl tert-butyl ether (MTBE) and tertiary amyl methyl ether (TAME) may be produced from the olefins isobutylene and isoamylene, respectively, and are also used as gasoline blending components. Refinery production of these olefins, however, may exceed the feedstock demands of the oxygenate units. Alkylate, on the other hand, is produced from a variety of olefin feedstocks, including isobutylene, isoamylene, and propylenes and other butylenes and amylenes. Thus, alkylation units can utilize a range of light olefins produced at the refinery.

5.4.1 HF Alkylation Processes

The alkylation process incorporates three general steps: reaction, separation, and treatment. After the isobutane and olefins are reacted in a reactor in the presence of the acid catalyst, the alkylate product, byproduct propane and butanes, unreacted isobutane, and acid are then separated through settling and distillation. Acid and unreacted isobutane are recycled to the reactor with fresh acid, isobutane, and olefin feed makeup as needed.[24] Alkylate, byproduct propane, and byproduct butane are treated to remove fluorine compounds and/or residual HF before being sent to storage.

HF alkylation units account for about 52 percent of the alkylate produced in the United States.[25] HF serves as the reaction catalyst; nearly all of the HF is recovered from the process, with only a small amount of HF consumed because of side reactions between the acid and impurities in the feedstocks. Approximately 0.1 to 0.2 pounds of HF are consumed per barrel of alkylate produced.[27]

The two major licensors of HF alkylation technology are Phillips Petroleum and UOP. The Phillips design uses gravity to circulate HF between the settler and the reactor whereas the UOP design uses a pump for circulation. Both technologies require relatively small amounts of anhydrous HF (i.e., roughly one truckload per month for a 10,000 barrel per day facility). The key safety advantage of the UOP acid circulation system is that smaller HF inventories are needed than the Phillips system. The key safety advantage of the Phillips process is that no pump is needed to circulate the liquid HF between the reactor, the settler, and the heat exchangers, thus eliminating a common leak source.[28,29]

Phillips Process

The Phillips process is used in over 85 refineries throughout the world. Exhibit 5-5 provides a simplified process flowchart. Exhibit 5-6 shows a closeup sketch of the Phillips reactor, settler, HF storage, and cooler. At the start of the process, the isobutane and olefin feedstocks are mixed and dried. This mixture is then introduced to the reactor at high velocities through nozzles to provide contact with the HF catalyst. An emulsion or suspension of HF and hydrocarbons is formed that rises in the reactor toward the settler. The reactor is essentially a vertical pipe from the acid cooler to the settler. The alkylation reactions are exothermic, therefore, the reactor effluent is warmer than the influent and flows to the settler due to the density difference between cold feed and warmer effluent. Most reactions occur as the emulsion rises through the reactor. The reaction mixture of products, byproducts, HF and unreacted isobutane exits the reactor and enters the settler where the acid separates from the hydrocarbon phase (i.e., alkylate, isobutane, propane). HF settles b gravity to the bottom of the settler, where it is removed and cooled in one or more heat exchangers.[30] Liquid

ED_002700_00005500-00079

EXHIBIT 5-5
Phillips Alkylation Process

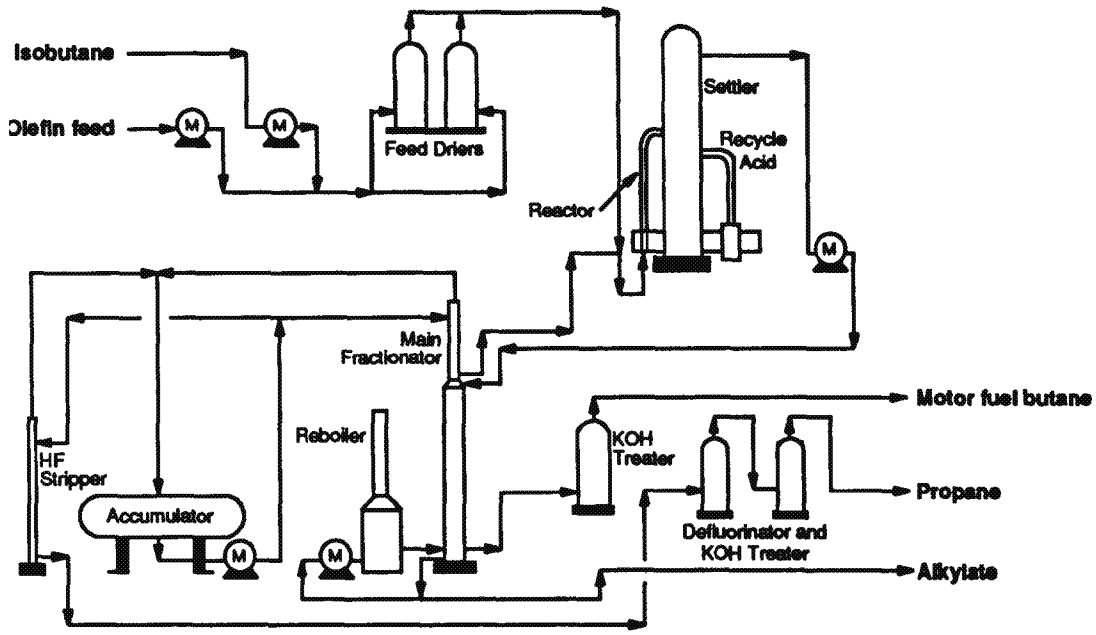

Source: Albright, Lyle F., "H_2SO_4, HF Processes Compared, and New Technologies Revealed,' *Oil end Gas* Journal, November 26, 1990, p 70-77. (10.1)

ED_002700_00005500-00080

EXHIBIT 5-6
Phillips HF System Reactor

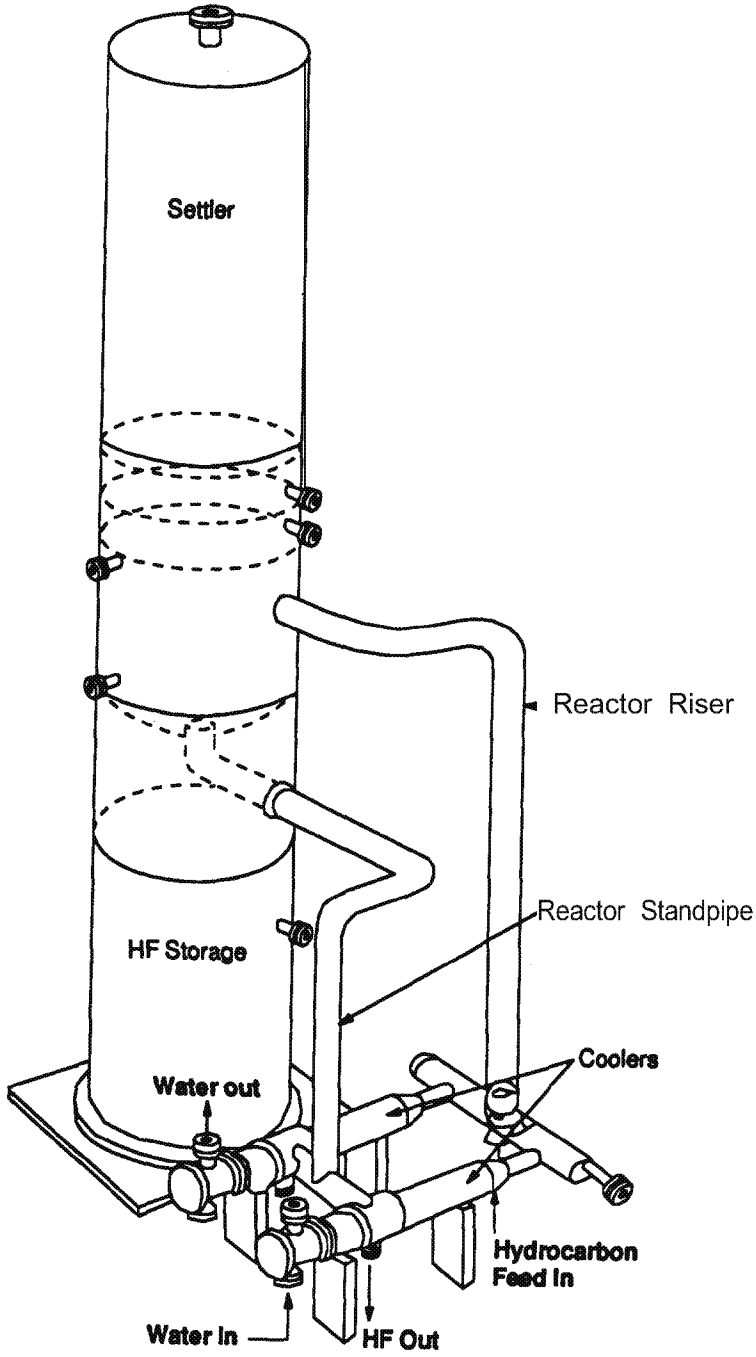

Source: Albright, Lyle F., H_2SO_4, HF Processes Compared, and New Technologies Revealed,' *Oil and Gas Journal*, November 26, 1990, p 70-77. (10.1)

ED_002700_00005500-00081

HF flows to the reactor from the settler by gravity. Fresh HF is stored in the settler bottom for use as makeup for acid lost as a result of side reactions. A slip stream of circulating HF is charged to the acid regenerator to remove contaminants to maintain acid purity.

The hydrocarbon phase from the settler contains mainly isobutane and alkylate with lesser amounts of propane, n-butane, dissolved HF, and isoalkyl fluorides. in the main fractionator, this mixture is separated into four streams: (1) the overhead stream is a mixture of HF and propane, (2) a liquid side stream is mainly isobutane that is recycled to the reactor, (3) another liquid side stream is n-butane rich and (4) the bottom stream is aikyiate product. An HF stripper is used to separate propane from HF. The n-butane and propane must be treated with potassium hydroxide (KOH) to remove an residual HF and the propane is further treated with alumina to remove isoaikyl fluorides.[31]

Polymers may form as the result of side reactions in the akylation process. Because they are soluble in HF, polymers tend to accumulate in the recycle acid stream. To maintain acid purity, a critical process parameter, a slip-stream of acid is drawn off the bottom of the heat exchangers and is treated with a hot isobutane vapor stream to strip HF away from the polymer and water. The combined HF-isobutane mixture is recycled to the settler. Polymers are removed in the form of acid soluble oil (ASO).[32]

UOP Process

The UOP process is used in 62 refineries throughout the world, 36 of which are in the United States.[33,34] Exhibit 5-7 gives a flow-diagram of a two reactor unit in this process, dried isobutane and olefins are premixed before being fed to a cylindrical reactor. HF is stored in a vessel in the alkylation unit. Fresh makeup HF is added as needed to the recycled acid and is pumped into the bottom of the reactor. The hydrocarbon mixture is introduced through several nozzles positioned at various points in the reactor to achieve good dispersion and mixing.

Since the alkylation reactions are exothermic, a water cooled heat exchanger in the reactor is used to maintain the reaction mixture at the desired temperature. The effluent mixture of alkylate product, hydrocarbon byproducts, unreacted chemicals, and HF leaves the reactor and is charged to a settler where the HF and hydrocarbon phases are separated. Facilities with relatively small capacity use a single reactor; large facilities use two reactors in series.[35] While the UOP main fractionation column (or isostripper) is operated somewhat differently from that of the Phillips process, hydrocarbons and regenerated HF are separated and treated in much the same manner.

In a two reactor system, the olefin feed is split to the two reactors. Olefins charged to the first reactor are essentially completely reacted. A stream of HF, alkylate, and isobutane proceeds from the first reactor to the first settler. The hydrocarbon stream from the first settler, consisting of unreacted isobutane, propane, and alkylate product, is combined with additional olefins and fed to the second reactor. The HF stream from the first settler is also fed into the second reactor. A second settler is provided to separate the liquid phases in the stream.[36]

HF inventories in UOP units range between 5 and 10 pounds of HF per barrel of alkylate produced.[37] These inventories are lower than those for Phillips units.[38] UOP units require lower inventories because the settlers are typically small, the heat exchangers are installed in the reactor (unlike the external heat exchanger in the Phillips reactor), and the pumped circulation of the emulsion across the heat transfer surfaces in the reactors increases reaction and heat transfer efficiency.[39]

EXHIBIT 5-7
UOP Alkylation Process

UOP C_3-C_4 HF Alkylation Process*

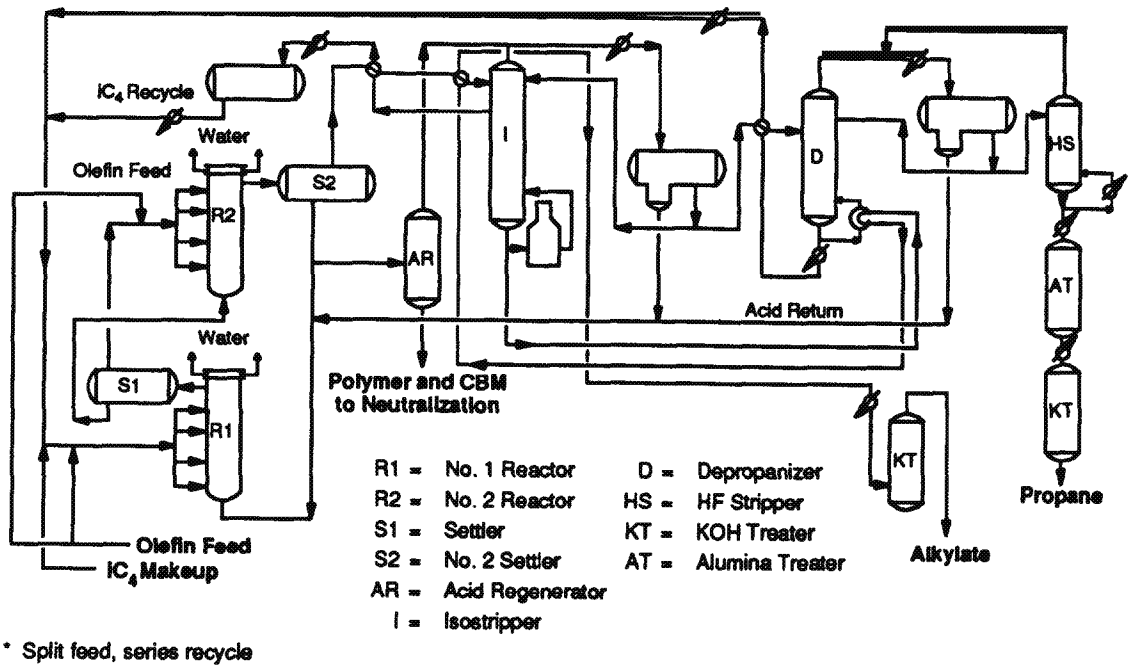

* Split feed, series recycle

Source: Albright, Lyle F., "H_2SO_4, HF Processes Compared, and New Technologies Revealed,' *Oil and Gas* Journal, November 26, 1990, p 70-77. (10.1)

ED_002700_00005500-00083

5.5 Uranium Processing

Current technology for the manufacture of uranium reactor fuel used in commercial electric power generation and DOE weapons development requires that the uranium be converted to gaseous uranium hexafluoride (UF_6) for enrichment. In this process, HF is used as a source of fluorine. Following enrichment, reactor fuel elements are manufactured by converting UF_6 to uranium dioxide ($U0_2$).[40] Only two facilities produce UF_6 in the United States.

To convert uranium ore concentrate (yellowcake) to gaseous UF_6, two basic reaction routes are used. The first, employed at the Allied Chemical Facility in Metropolis, Illinois, relies on a multistep process. The first step is reduction of the ore concentrate to impure UO_2. This is followed by the hydrofluorination reaction between anhydrous HF and uranium dioxide to produce impure uranium tetrafluoride (UF_4). The solid UF_4 is then fluorinated with fluorine gas (electrolytically generated from HF), yielding gaseous UF_6. Metal impurities forming volatile fluorides are produced and sent to the UF_6 off-gas stream, where they are next removed by fractional distillation. The purified UF_6 product is then cooled, drained into a cylinder and allowed to solidify before transport to an isotope separation plant for enrichment[41]

The process employed at the Sequoyah Fuels Facility in Gore, OK relies on nitric acid dissolution of the ore concentrate followed by solvent extraction purification of the uranium-bearing solution. Purified uranyl nitrate solution is evaporated and thermally denitrated to UO_3, which in turn is reduced to UO_2. This UO_2, product is then hydrofluorinated by anhydrous HF to UF_4. The solid UF_4 is fluorinated to gaseous UF_6, with fluorine gas. The UF_6 is then cooled, condensed and solidified in cylinders before transportation to an isotope separation plant.

Following either process, the UF_6 undergoes isotopic separation yielding UF_6 enriched in the fissile isotope, uranium-235 (U235). The reject UF_6, depleted in U235, is condensed and stored, while the enriched UF_6 is chemically converted to UO_2 for use as reactor fuel. This chemical conversion involves a number of reactions that vary, depending on the type of process involved. Some processes include reaction with ammonia; in these processes the UF_6 is converted to ammonium diuranate, which is dried and thermally decomposed to $U0_2$ Processes are available for regenerating HF from UF_6, depending on the need for depleted uranium materials.[42]

5.6 Aluminum Fluoride and Aluminum Manufacturing

Aluminum fluoride (AlF_3) is used to promote the fusing of aluminum, to prevent the formation of oxides, and to suppress sodium ion formation in the electrolytic manufacture of aluminum metal. Depending on the manufacturing process chosen, aluminum fluoride can be made using either HF or fluosilicic acid (a byproduct from phosphoric acid production).[43] Some large scale fully integrated aluminum producers can produce their own aluminum fluoride.

In a typical process to make AlF_3, gaseous HF emanating from the kiln is contacted directly with hydrated aluminum in a fluidized bed reactor. To make aluminum, aluminum fluoride and aluminum oxide are added to an electrolytic ceil. An electric current in the cell causes a reaction which releases the oxygen in the aluminum oxide to produce CO, and aluminum metal. HF is also evolved in this process and is ducted to an air control system. The HF reacts with fresh aluminum oxide and is returned to the electrolytic cell.[44] Thus, most of the HF used by aluminum companies for AlF_3 production is generated and used captively in the gaseous state and is not isolated as a liquid product. Only small quantities of aluminum fluoride are supplied to this industry by HF merchant producers.[45]

5.7 Electronics Manufacturing

Ultra-high purity aqueous HF is used in the manufacture of semiconductor chips.[46] Its most concentrated form is typically 49 percent. While it is purchased in this concentration, it is typically used in much more dilute solutions, 1 to 10 percent. It is frequently mixed with ammonium fluoride (NH_4F) to buffer its effect in what is known as Buffered Oxide Etch (BOE) to etch silicon dioxide and silicon nitride. it may be mixed with an oxidizing agent such as nitric or chromic acid to etch polycrystalline or single crystal silicon. Silicon is usually etched to delineate defects in the crystal, to define patterns in integrated circuits, and to remove areas damaged by machining in the production of silicon ingots and wafers.[47]

HF mixed with a hydrocarbon-based surfactant effectively eats away the surface of a semiconductor wafer and easily covers its surface, greatly facilitating manufacture of very large-scale integrated circuits (VLSIs).[48] Ultra-pure HF may also be used in the manufacture of 16-megabit dynamic random access memory, application-specific integrated circuits, and logic devices[49]

in a typical HF etching process, HF is pumped from 55 gallon drums or one gallon containers under nitrogen pressure, passed through a surge tank, and finally sent through a manifold which directs its flow to etching basins. The wafers which are to be etched are set into trays fastened to automatic dipping arms. A technician loads the wafers into the trays. After dipping, the wafers are rinsed in low conductivity deionized (DI) water. The spent DI water is pumped to an acid treatment plant for neutralization. A gaseous process using anhydrous HF is also used in the semiconductor industry to etch integrated circuits,

5.8 Chemical Derivatives Manufacturing

HF is used directly or indirectly as a source of fluorine in the manufacture of many organic and inorganic compounds having highly specialized and valuable properties. These compounds include fabric and fiber treating agents, herbicides, pharmaceutical intermediates, and inert fluorinated liquids. Other products include boron trifluoride (BF_3) sulfur hexafluoride (SF_6), and fluoride salts.[51] Processes used in the manufacture of some examples of these derivatives are briefly discussed below.

5.8.1 inorganic Derivatives

High purity anhydrous HF is the principal raw material for the production of fluorine. Fluorine is generated in electrolytic ceils, along with hydrogen gas. Electrolyte for the ceils is prepared by mixing of potassium bifluoride (KF•HF), which is produced from HF, with anhydrous HF to form (KF•HF). HF is stored in bulk and charged to a holding tank; it is continuously fed to the electrolytic ceils from the holding tank to maintain an HF concentration of 40 to 42 percent. HF is not used directly as the electrolyte because of its low conductivity. Commercial fluorine-generating cells usually operate at temperatures of 60 to 110°C and are cooled with water at 75°C. The electrolyte level must be maintained at a set level below the cell head to maintain a seal between the fluorine and hydrogen compartments. Entrained electrolyte is removed from the product gas streams from the cells with demisters and filters. Most of the HF is removed from the gas streams by cooling to -11 0°C, leaving a concentration of about 3 mole percent HF. The condensed HF is recycled. For some uses, no further purification of the fluorine is needed. Depending on the intended use of the fluorine, the HF concentration in the fluorine may be reduced to less than 0.2 mole percent by using sodium fluoride towers or further cooling to freeze out the HF.[52]

Most inorganic fluorides are prepared by reaction of HF with oxides, carbonates, hydroxides, chlorides, or metals. Ammonium bifluoride, which may be used for rapid frosting of glass and in metallurgical uses, is produced by a gas phase reaction of one mole of anhydrous ammonia with two

ED_002700_00005500-00085

moles of anhydrous HF. Sulfur hexafluoride, which has a number of electrical uses, is produced by reaction of sulfur vapor with **fluorine.**[53]

Fluorosulfuric acid (HSO_3F) (also called fluorosulfonic acid) is produced by mixing solutions of HF and SO, in HSO_3F or introducing HF and SO, separately into a stream of HSO_3F. HSO_3F is used as a catalyst for a number of processes and in the production of other fluorine derivatives. Boric acid and HSO_3F may be use to produce boron trifluoride. (Boron trifluoride may also be produced using fluorspar, borax, and sulfuric **acid.)**[54]

Fluoboric acid, used as an intermediate for fluoborate salts, which have a number of metallurgical uses, is produced by reaction of 70 percent aqueous HF with boric acid. The reaction is exothermic and is controlled by cooling. The commercial product is usually a 48 to 50 percent solution containing excess boric acid to eliminate any HF **fumes.**[55]

5.8.2 Organic Derivatives

The most commonly used fluorinating agents for production of organic fluorine derivatives are fluorides of alkali metals, which are generally produced from HF. For example, sodium monofluoroacetate, a rodenticide, may be produced by reaction of potassium fluoride with chloroacetic acid ester. In one commercial process, ethyl chloroacetate, purified by distillation to remove traces of acid and water, is mixed with potassium fluoride that has been oven dried and finely powdered. The reaction takes place in an autoclave with stirring for 11 hours[56]

HF may also be used directly as a fluorinating agent in the production of organic fluorine compounds. Benzotrifluoride, used as an intermediate in the production of herbicides, drugs, germicides, and dyes, is produced by reaction of benzotrichloride with anhydrous HF under high pressure. Typically, HF is reacted with benzotrichloride in a ratio of 4 moles HF to 1 mole benzotrichloride at temperatures of 80 to 110°C and pressures of 220 to 225 psi for 2 to 3 **hours.**[57]

Fluoroaromatics can also be produced by diazotization of substituted anilines with sodium nitrite in anhydrous HF, followed by in ***situ*** decomposition of the aryldiazonium fluoride. The resulting aromatic fluorocarbon is further processed for pharmaceutical, agrochemical, and engineering resin applications.[58]

A number of fluorine-containing polymers are produced from organic derivatives of HF. Tetrafluoroethylene, the monomer for polytetrafluoroethylene (Teflon[TR]) is generally produced by pyrolysis of chlorodifluoromethane, an HF derivative (see Section 5.3, Chlorofluorocarbon Production). Vinylidine fluoride, used to produce polyvinylidine fluoride, may also be made from CFCs by several routes[59]

5.9 Processes Using Aqueous HF

While the majority of HF consumed by industry is in the anhydrous or 100 percent form, aqueous HF solutions with concentrations of 70 percent and lower are used in stainless steel pickling, chemical milling, glass etching, exotic metals extraction and quartz **purification.**[60] Aqueous HF is used in combination with other acids for cleaning. As noted above, aqueous HF is also used in electronics manufacture and in the production of some inorganic fluorine compounds.

Stainless steel pickling requires mixtures of dilute HF and nitric (HNO_3) acids to remove oxide scale formed on stainless steel during the annealing process. Pickling gives stainless steel its characteristic shiny appearance. The concentrations of pickle acids used vary but are typically **2** to 3.5 weight percent HF and 6 to 10 weight percent HNO_3. Over time, the metal concentration in the

ED_002700_00005500-00086

pickling bath increases, leading to a decrease in bath activity. The spent acid must be replaced periodically, either by new acid or recycled acid.

Spent pickling acid can be neutralized with lime. The resultant sludge is landfilled, and soluble nitrate salts are discharged with wastewater. This has been the conventional method of dealing with HF/HNO_3 waste acid. At least until the early 1980's, no hydrofluoric acid recovery processes were in operation in the U.S.[61]

In the late 1980's, AQUATECH developed an acid recovery system that can be used to recycle waste HF pickling acid. Waste acid may be recovered by neutralizing it with potassium hydroxide, filtering the resulting KF/KNO_3 salt solution to remove metal hydroxides for recycle, and converting the clean potassium salts into a mixed acid (HF/HNO_3) and potassium hydroxide base, using electrodialysis. This system has been successfully used at Washington Steel Corporation to recycle valuable components of spent pickling acid, and reduce the amount of waste HF acid.[62]

Mixtures of aqueous HF and HNO_3 are used in the aerospace industry for paint stripping and cleaning aircraft surfaces. HF- based cleaning solutions are approved by the Federal Aviation Administration (FAA) and are required for some applications.

Aqueous HF is used in the manufacture of glass articles. A mixture of HF and sulfuric acid may be used for acid-polishing in the mechanical finishing of glass. Dilute aqueous HF may be used for acid etching or frosting to produce articles with good light-diffusing properties.[63]

5.10 Dissolving Ores for Production of Tantalum and Columbium (Niobium) Metals

Aqueous HF is used to digest metallic ores to produce tantalum (Ta) and columbium (Cb) metals. These metals are used in many different applications including military electronics, VCRs, TVs, and other electronic systems, aerospace superalloys (used in jet engine components), medical diagnostic equipment, pacemakers, and anti-armor ballistics. One of the unique properties of these metals is their extreme resistance to corrosion.[64]

The only process currently used commercially to produce these metals involves HF. The use of HF is essential because the Ta and Cb contained in the ores are basically insoluble in most acids except HF. Also, HF maintains a high degree of purity in the liquid phases of the process. This purity is essential to the quality of the finished and intermediate products. Furthermore, slightly radioactive contaminants in the ore, such as uranium and thorium, react with HF to form insoluble fluoride compounds which are safer and more easily handled than liquid waste streams containing these radioactive elements.[65]

The production process involves converting Ta/Cb-bearing ores and slags (purchased raw materials) to pure chemicals, metals, and alloys through a series of chemical and metallurgical operations, These include grinding, chemical digestion and dissolution, filtration, solvent extraction, crystallization, drying, calcination, pressing, sintering, chemical reduction, melting, forging, swaging, rolling, and drawing.[66]

The Ta/Cb-bearing ores are first ground and then fed to digestion tanks containing hydrofluoric acid. The acid dissolves the Ta and Cb from the ore to produce fluorotantalic acid (H_2TaF_7) and fluorocolumbic acid (H_2CbF_7). Ore impurities (e.g., Al, Ca, Mg, U, Th, etc.) also react to form insoluble fluoride compounds. After a sufficient dissolution period, the slurry is filtered, removing the insoluble compounds and the leftover solution of Ta and Cb acids is pumped to the metal separation area. The Ta and Cb are continuously extracted from the feed solution by a solvent extraction process utilizing contact with methylisobutylketone (MIBK), hydrofluoric acid, sulfuric acid, and water. This process separates the Ta/Cb solution into two separate intermediate product

ED_002700_00005500-00087

streams, one containing H_2CbF_7, and one containing H_2TaF_7. There is also a liquid waste stream comprised of an aqueous solution of sulfuric and hydrofluoric acids.[67] This acid stream is either pumped to intermediate holding tanks or to on-site waste treatment plant tanks. Wastewater from the HF process is neutralized using lime.[68]

After further processing, the Ta is reacted with potassium chloride (KCl) and HF followed by cooling in a crystallizer to form potassium tantalum fluoride (K_2TaF_7). The K_2TaF_7 is further reacted with metallic sodium in a sealed reaction vessel utilizing electric furnaces followed by cooling to form a mixture of Ta metal and salts, potassium fluoride (KF) and sodium fluoride (NaF). The fluoride is extracted from this mixture by leaching with water followed by drying in a steam-heated dryer. About half of the Ta product is sold at this stage and the other half is pressed, purified, and converted to form a variety of other end products. The remainder of the Cb processing does not involve HF.[69]

5.11 Linear Alkylbenzene Production

HF is used as a catalyst in the production of linear alkylbenzene (LAB) which is ultimately used to make industrial and household detergent. Detergents fall into two categories: hard or DDBS (sodium dodecylbenzene sulfonate) detergents, that are slow to biodegrade: and soft or LABS (linear sodium alkylbenzene sulfonate) detergents, which rapidly biodegrade. Since the 1960's, the use of DDBS or hard detergents has been largely phased out. Linear alkylbenzene is used in the production of soft detergent."

5.11.1 Chemistry of Alkylation with HF Catalyst

The starting materials in the manufacture of soft detergents are benzene and linear paraffins, which are long single chain hydrocarbon molecules. The alkylation process results in the attachment of the linear paraffin to the benzene molecule. There are two commercial production processes available: one involves the use of an aluminum chloride catalyst, and the other the use of HF as the catalyst." In the United States, only two companies use HF as a catalyst for linear alkylbenzene production.

5.11.2 Manufacturing Process

Typically, in the detergent industry, the UOP process is utilized in HF alkylation. It is similar to that used in the petroleum refining industry, and is described in detail in section 54.1 of this report. In a UOP detergent alkylation process, where HF is the catalyst, paraffins are converted to olefins through catalytic dehydrogenation (i.e., the removal of hydrogen). Anhydrous HF and benzene are then added to the olefins. HF catalyzes the reaction between the olefins and benzene, producing crude linear alkylbenzene. The HF used in the reaction is recovered and recycled. The final step in linear alkylbenzene production is purification. The product alkylbenzene sulfonate or soft detergent is obtained by sulfonation of the LAB intermediate with oleum or SO,, in a separate process unit.

Vista Chemical Company's Lake Charles LAB Plant in Westlake, Louisiana uses HF as a catalyst in linear alkylbenzene production. Vista typically has on hand from 65,000 to 70,000 gallons of HF to produce 200 million pounds annually of LAB. Of these, 40,000 are used in the actual chemical process, while the remaining 25,000 to 30,000 gallons are stored at ambient temperature. Vista is attempting to remove the excess and maintain only a minimum inventory. HF is transported to their facility once or twice a year, by tank truck.[72]

5.12 Pharmaceutical Production

HF is used as a catalyst and solvent in the production of an intermediate in acetaminophen production. The steps in the production of the intermediate are:[73]

(1) Combination of two compounds to form an intermediate (the reaction is non-catalytic);

(2) The catalytic rearrangement of the intermediate formed in (1), using anhydrous HF as both catalyst for the reaction and solvent for the products formed in this step and maintaining low temperatures;

(3) Recovery of the HF catalyst/solvent and subsequent recycle to step (2); and

(4) Purification of the product formed in (2).

HF is used in this process for its reaction selectivity (i.e., HF does not catalyze other, undesirable reactions that might produce unwanted byproducts) and because no other solvent is required when HF is used. Low temperatures can be maintained, which is conducive to production of fairly pure reaction products, and very little waste is produced.[74]

The Hoechst Celanese Corporation's bulk acetaminophen unit at Bishop, TX, receives shipments by truck of 5,000 gallons (about 40,000 pounds) approximately once per year for use as a catalyst and solvent as described above. The total HF storage capacity on site is 8,400 gallons (84,000 pounds). The maximum quantity of HF in the process is currently 3,200 gallons (24,300 pounds); however, Hoechst Celanese indicates that production rates will be increased and the quantity of HF in the process will rise to 5,200 gallons (39,000 pounds).[75]

ED_002700_00005500-00089

ENDNOTES

1. Mark, Herman F., Donald F. Othmer, Charles G. Overberger, and Glenn T. **Seaborg**, eds., Kirk-*Othmer Encyclopedia* of *Chemical Technology,* Third Edition, Volume 10, John Wiley and Sons, New York, 1980. (285)

2. U.S. Environmental Protection Agency, *Screening Study on Feasibility of Standards of Performance for Hydrofluoric Acid Manufacture,* October 1978, Document Number EPA-450/3-78-109. (435)

3. U.S. Environmental Protection Agency, *Screening Study on Feasibility of Standards of Performance* for *Hydrofluoric Acid Manufacture.*

4. Allied-Signal Inc., *Hydrogen Fluoride Production Process Description,* The HF Products Group, Morristown, NJ. (235)

5. Allied-Signal Inc.

6. Seringer, Carolyn S., Du Pont Chemicals, comments from technical review of *Hydrogen Fluoride Study,* Report *to* Congress, Draft May 8, 1992, June 5, 1992. (436.4)

7. Hague, William J., Allied-Signal, comments from technical review of *Hydrogen Fluoride Study, Report to Congress,* Draft May 8, 1992, June 10, 1992. (153)

8. Allied-Signal Inc.

9. Chemical Manufacturers Association Hydrogen Fluoride Panel, *The Hydrogen Fluoride/Hydrofluoric Acid Industry,* Washington, DC., May 7, 1991. Prepared for the U.S. Environmental Protection Agency. (270)

10. U.S. Environmental Protection Agency, *Section 305(b) Survey Special Responses,* 1987-I 988. **(430)**

11. General Chemical Corporation, Bay Point Plant brochure, April, 1992. (141.5B)

12. Starry, Claire, Kirtland E. McCaleb, and William A. Stock, *Study of Truck Transportation of Hazardous Chemicals,* SRI International. (460)

13. Mark, Herman F.

14. Environment Canada Environmental Protection Service, *Hydrogen Fluoride and Hydrofluoric Acid, Environmental and Technical Information for Problem Spills,* Technical Services Branch, Ottawa, Ontario, July 1984. (220)

15. Du Pont Chemicals, *Hydrofluoric Acid, Anhydrous - Technical: Properties,* Uses, *Storage* and *Handling, Wilmington, DE.* (137.5)

16. Hague, William J., Allied-Signal.

17 Seringer, Carolyn S., Du Pont Chemicals.

18. Chemical Manufacturers Association Hydrogen Fluoride Panel.

19. Seringer, Carolyn S., Du Pont Chemicals.

20. **Chapin**, L.E., G.C. Liolios, and T.M. Robertson, 'Which Alkylation - **HF** or H_2SO_4?" Hydrocarbon *Processing,* September 1985, p 67.

21. Phillips Petroleum Company, comments from technical review of *Hydrogen Fluoride Study, Report to Congress,* Draft May 8, 1992. (370.92)

22. *Encyclopedia of* Science *and Technology,* Third Edition, Volume 1, McGraw Hill Book Company, New York, 1987, p 355-356. (328.7)

23. Morris, Jeff, American Petroleum Institute, **Fina** Oil and Chemical Company, comments from technical review of *Hydrogen Fluoride Study, Report to Congress,* Draft May 8, 1992, June 1, 1992. (344)

24. Morris, Jeff, American Petroleum Institute, **Fina** Oil and Chemical Company.

25. Morris, Jeff, American Petroleum Institute, **Fina** Oil and Chemical Company.

26. Chemical Manufacturers Association Hydrogen Fluoride Panel.

27. Morris, Jeff, American Petroleum Institute, **Fina** Oil and Chemical Company.

28. Union Pacific Resources Company, *Hydrofluoric Acid Process Orientation,* Wilmington, CA, 1987. (205)

29. Albright, Lyle F., "H_2SO_4, HF Processes Compared, and New Technologies Revealed," *Oil and* Gas *Journal,* November 26, 1990, p 70-77. (10.1)

30. Albright, Lyle F.

31. Albright, Lyle F.

32. **Technica** Inc., *Quantitative Risk Assessments of Generic Hydrofluoric Acid and Sulfuric Acid Alkylation Units for Phillips Petroleum Company, Management Summary,* May 1990. (420)

33. **Mudan**, Krishna *S., Acute* ***Inhalation*** *Toxicity of Hydrogen Fluoride,* **Technica** Inc., Columbus, OH, March 1989. (360)

34. Morris, Jeff, American Petroleum Institute, **Fina** Oil and Chemical Company.

35. Albright, Lyle F.

36. Albright, Lyle F.

37. Morris, Jeff, American Petroleum Institute, **Fina** Oil and Chemical Company.

38. Albright, Lyle F.

39. Albright, Lyle F.

40. Chemical Manufacturers Association Hydrogen Fluoride Panel.

ED_002700_00005500-00091

41. Emerson, Steven D., Kerr-McGee Corporation, comments from technical review of *Hydrogen Fluoride Study, Report to Congress,* Draft May 8, 1992, June 5, 1992. (139.514)

42. Emerson, Steven D., Kerr-McGee Corporation.

43. Chemical Manufacturers Association Hydrogen Fluoride Panel, *The Hydrogen F/uoride/Hydrofluoric Acid Industry,* Washington, DC, May 7, 1991. Prepared for the U.S. Environmental Protection Agency. (270)

44. **Carwile,** Roy, Aluminum Association, comments from technical review of *Hydrogen Fluoride Study, Report to Congress,* Draft May 8, 1992, May 21, 1992. (77.5)

45. Chemical Manufacturers Association Hydrogen Fluoride Panel.

46. *Chemical Week,* February 6, 1991, p 14. (118)

47. McCue, Thomas C., Wacker Siltronic Corporation, comments from technical review of *Hydrogen Fluoride Study, Report to Congress,* Draft May 8, 1992, June 2, 1992. (328.645)

48. *Japan Chemical Week,* "Hydrofluoric Acid Usable for 1 GM-DRAM Production," August 9, 1990. **(215)**

49. *Electronic News,* **"TI** to Make Ultra-Pure HF Acid,' September 24, 1990. (475)

50. Motorola, Inc., Discrete and Materials, *Chemical Safety Audit Profile,* Phoenix, AZ, April 9, 1991. (355)

51. Chemical Manufacturers Association Hydrogen Fluoride Panel.

52. Mark, Herman F.

53. Mark, Herman F.

54. Mark, Herman F.

55. Mark, Herman F.

56. Mark, Herman F.

57. Mark, Herman F.

58. McFadden, Thomas H., Mallinckrodt Specialty Chemicals Company, comments from technical review of *Hydrogen Fluoride Study, Report to Congress,* Draft May 8, 1992, June **1,** 1992. (328.648)

59. Mark, Herman F.

60. Chemical Manufacturers Association Hydrogen Fluoride Panel,

61. U.S. Environmental Protection Agency, *Development Document for* ***Effluent*** *Limitations Guidelines and Standards for the* ***Iron*** *and Steel Manufacturing Point Source Category,* **Effluent** Guidelines Division, Volume V, p 251, Washington, DC., May 1982. (489.93)

62. Thornburg, Gary, John C. McArdle, Joseph A. Piccari, and Carolyn H. Byszewski, "Recovery and Recycle of Valuable Constituents in Spent Pickling Acids,' *Environmental Progress,* Volume 9, Number 4, November 1990, p N10. (470)

63. Mark, Herman F.

64. Letter, ***Information*** *on the Unique Value of Hydrogen Fluoride (HF) to Industry and Society,* From: Anthony **T.** Campitelli, Cabot Corporation, Boyertown, PA, To: Craig Matthiessen, U.S. Environmental Protection Agency, January 24, 1992. (294.3a)

65. Letter, *Information on* the *Unique Value of Hydrogen Fluoride (HF) to Industry and Society.*

66. Letter, *Information on the Unique Value of Hydrogen Fluoride (HF) to Industry and Society.*

67. Letter, *Information on the Unique Value of Hydrogen Fluoride (HF) to Industry and Society.*

68. Letter, *Infofmation on the Unique Value of Hydrogen Fluoride* ***(HF)*** *to Industry and Society.*

69. Letter, ***Information*** *on the Unique Value of Hydrogen Fluoride (HF) to Industry and Society.*

70. Meyers, Robert A., ed., *Handbook of Petroleum Refining Processes,* McGraw Hill Book Company, New York, 1986, "UOP Linear Alkylbenzene (LAB) Manufacture," by P.R. Pujado, p 1-37 - I-42. (416)

71. Meyers, Robert A., ed.

72. Vista Chemical Company, *HF Overview,* Lake Charles **LAB** Plant, Westlake, LA. (497.8)

73. Hanlon, Richard G., Hoechst Celanese Corporation, comments from technical review of *Hydrogen Fluoride Study, Report to Congress,* Draft May 8, 1992, May 28, 1992. (192)

74. Hanlon, Richard G., Hoechst Celanese Corporation.

75. Hanlon, Richard G., Hoechst Celanese Corporation.

ED_002700_00005500-00093

6. HAZARDS OF HYDROGEN FLUORIDE PROCESSES AND INDUSTRY PRACTICES TO PREVENT RELEASES

This chapter discusses the hazards associated with the loss of containment of HF during production, use, and storage at industrial facilities, and during transport. Also discussed are industry accidental release prevention practices specifically for HF processes. Before the hazards and practices specific to HF are addressed, however, it is important to develop a general frame of reference in terms of the general hazards associated with any chemical release in the chemical and petroleum refining industries and the general practices for safety and chemical accident prevention. This will facilitate a more thorough understanding of any unique hazards or practices associated with HF process.

6.1 General Hazards

The primary concern in any industry that handles or produces hazardous chemicals is a loss of containment. Releases occur primarily because of human error or equipment failure or some combination of both. For example, a release may occur if an operator turns a wrong valve or a pump seal fails. It is often difficult to attribute a release solely to human error or equipment failure: many times releases result from a combination of both.

Human error is a result of the human factors involved in researching, designing, constructing, and operating a process. Poor decisions, misjudgment, or lack of skills by operators, maintenance workers, process designers, or management can contribute to the potential for a release. Typical human errors include operator error, inadequate equipment design, and inadequate maintenance. These errors in turn may be caused by management failure to provide adequate operator training, clear standard operating procedures, or adequate resources for proper equipment. In terms of human factors contributing to human errors, there is no **difference** between HF processes and other chemical processes.

Failure of equipment such as pipes, vessels, pumps, hoses, seals, and valves can result in a chemical release. Further, process instrument failure can contribute to process upset conditions. Most equipment failures are due to chemical hazards and process hazards. A hazard is a chemical or physical condition that has the potential for causing damage to people, property or the environment.'" Often, process hazards are increased by the general configuration or operating conditions (e.g., high temperature or pressure) of the process. Accidents can be initiated by process-related events such as overpressurization, overfilling, and loss of utilities. In the chemical processing and refining industries, typical chemical hazards include toxicity, corrosivity, flammability, and reactivity.

The process and chemical hazards that may result in equipment failure in HF processes are not categorically different than the hazards common to other chemical processes. For example, overfilling storage vessels is a process hazard common to many industrial facilities. Sites may take steps to ensure that when the liquid level in a storage vessel reaches a set level, no more material is introduced into the vessel. For some hazardous materials, including HF, the consequences of an overfill incident may be severe, and additional precautions may be necessary to eliminate the possibility of overfilling vessels.

Industry practices are used to prevent releases by addressing the human factors related to human error and the chemical and process hazards related to equipment failure. Industry addresses the prevention of releases through the development and implementation of industry-wide standards and practices, and process safety management programs at individual sites.

ED_002700_00005500-00094

6.2 General industry Practices

6.2.1 Process Safety Management

Facilities that handle hazardous materials have a responsibility for understanding the hazards present at their sites and for taking steps to ensure that chemical accidents due to these hazards are prevented. Analysis by many organizations, including the American Institute of Chemical Engineers - Center for Chemical Process Safety (AIChE-CCPS), EPA, and others, has indicated that major chemical accidents could be prevented not by hardware and technology alone but by comprehensive management systems designed to identify and control hazards[2,3] These management systems are known today as Process Safety Management (PSM), consisting of "comprehensive sets of policies, procedures, and practices designed to ensure that barriers to major incidents are in place, in use and effective. The management systems serve to integrate process safety concepts into the ongoing activities of everyone involved in the process -- from the chemical process operator to the chief executive officer." [4]

PSM consists of several essential elements that work together to allow safe operation of a facility:

- **Management Commitment:** Management must adopt a philosophy that makes safety an integral part of operation from the top down; an attitude that all accidents can be prevented and that business must always be conducted properly.

- **Process Hazards Analysis** or hazard evaluation: The purpose of the process hazards analysis is to examine, systematically, the equipment, systems, and procedures for handling a hazardous substance; to identify the mishaps that could occur, analyze the likelihood that mishaps will occur, evaluate the consequences of these mishaps; and to analyze the likelihood that safety systems, mitigation systems, and emergency alarms will function properly to eliminate or reduce the consequences of the incident. A thorough process hazards analysis is the foundation for the remaining elements of the PSM system.

- **Process Knowledge and Documentation:** Facilities document the details of the technology and design of the process, its standard conditions and consequences of deviation from these standards, the known hazards of the chemicals and processes involved and protective systems for protection of workers, public and environment.

- **Standard Operating Procedures (SOPs):** These are procedures that describe the tasks to be performed by the operator or maintenance worker to ensure safety during operation and maintenance.

- **Training:** A program to teach those responsible for designing, operating, and maintaining the unit or plant. Elements in a management training system include development of training programs, training of instructors, measuring performance and determining the effectiveness of training. Training is typically carried out by plant managers and training staff.

- **Maintenance (Process and Equipment integrity):** A formal program to ensure that equipment is constructed according to design, installed properly, and adequately maintained.

ED_002700_00005500-00095

- **Prestartup Review:** The purpose of this review is to ensure that all elements of process safety, including hardware, procedures, and control software, are in place prior to startup, and that all prior issues of concern have been resolved.

- **Management of Change:** Management must instruct personnel to recognize change and to evaluate change with regard to process safety.

- **Safety Audits:** The purpose of safety **audits** is to measure facility performance, to verify compliance with a sound process safety program, and to determine that risks are being appropriately managed.

- **Accident investigation:** Accident investigation is a management process by which the underlying causes of incidents are identified, and steps are taken to prevent similar incidents.

- **Emergency Planning and Response:** Emergencies involving the processing of highly hazardous chemicals can have catastrophic results if not handled properly. Employees need to know and be trained in proper emergency procedures, evacuation requirements, and notification steps.

Recently, the Occupational Safety and Health Administration (OSHA) issued a final standard which establishes procedures for process safety management to protect workers from chemical accidents. The standard, Process Safety Management of Highly Hazardous Chemicals (29 CFR Pan 1910, February 24, 1992) emphasizes the management of hazards through process safety management to prevent or mitigate the consequences of chemical accidents involving highly hazardous chemicals. Facilities that handle highly hazardous chemicals in certain quantities will be required to follow the procedures in the rule to develop, document, and follow the elements of process safety management mentioned above. The standard covers processes that involve anhydrous HF in quantities at or above 1,000 pounds. **Other** areas covered by PSM which are applicable to HF risk assessment and management include contractors, emergency planning and response, work permits, and human factors assessment.

For the most part, industries that produce or use HF follow the same process safety management practices used at other chemical or petroleum industries. Like other industries, HF industries are trying to minimize inventories of hazardous chemicals, conduct rigorous accident investigations, and establish programs to test the quality of new equipment and materials before they are installed. There are some unique approaches to process safety management in some HF processes. For example, Du Pont has developed a safety guideline specifically for HF entitled, 'Anhydrous Hydrogen Fluoride Safety Guardian Manual,' and this manual is issued to all sites that handle HF. It is a corporate performance standard to ensure safe manufacture, handling, storage, and shipping of anhydrous HF, including specifying both minimum requirements for existing facilities and state-of-the art design for new HF facilities. The manual covers special properties of HF, first aid and medical treatment, design information, mechanical integrity, operation and handling, process safety management, environmental considerations, transportation, and customer safety.[5]

6.2.2 Hazard Evaluation

Facilities that handle, produce, and use hazardous chemicals may perform a variety of procedures for identifying and evaluating process hazards. Hazard evaluation is a particularly important element of process safety management and is extensively used in the chemical and petroleum industries. This section discusses various ways to perform hazard evaluations.

ED_002700_00005500-00096

Hazard evaluation procedures may be used to:

- identify existing hazards;
- identify potential consequences of the hazards;
- estimate the likelihood that events might occur to cause an accident resulting in the consequences identified; and
- estimate the likelihood that the systems in place at the facility would eliminate or reduce the consequences of an **accident.**[6]

Facilities use hazard evaluation techniques to review equipment and procedures, identify potential accident scenarios, and identify actions that can be taken to reduce the likelihood and mitigate the consequences of accidents. Hazard evaluation has been extensively applied to identify potential **"weak"** spots in processes and reduce the potential for posing risk to public health and safety and the environment.

There are many different approaches to hazard evaluation, of varying degrees of complexity, that are commonly used in industry to identify and assess hazards. **Exhibit** 6-l describes several procedures discussed in the AIChE document *Guidelines for Hazard Evaluation Procedures.'* These methods are applicable to the evaluation of hazards wherever HF is managed. Hazard evaluation is a complex endeavor and care must be taken to ensure that appropriate experts are involved so that a meaningful result is obtained. Interpretation of results is also complex. For example, relying only on consequence reduction without considering impacts on the entire process could lead to an operating mode that actually increases total risk.

The selection of a hazard evaluation technique depends on several factors, including the phase of process or plant development and the complexity of the process or plant, the purpose of the evaluation, the potential consequences of the hazard or hazards being evaluated (e.g., the potential for a large release of a highly toxic substance such as HF might warrant a detailed hazard evaluation), availability of data required for the hazard evaluation, and time and cost requirements.

Computer modeling techniques may be used in conjunction with the hazard analysis techniques described. Computer modeling is often used to predict the dispersion of dense gases such as HF in air over time following a release, and may provide an estimate of the potential concentration and downwind travel distance from the point of release.

Chemical Process Quantitative Risk Analysis (CPQRA) is a relatively new methodology that is used to supplement other hazard evaluation techniques by providing quantitative estimates of risks. *Risk* is a measure that is a function of both the probability that a hazard will result in an event with the potential to cause damage to life, property, and the environment and the severity of the consequences of the specific event. Quantitative estimates of consequences may be obtained using computer models for toxic chemicals such as HF. Source and dispersion models can provide quantitative information on release rates and dispersion of vapor clouds to some concentration level. Quantitative risk estimates are derived by combining the estimates of incident consequences and frequencies using various techniques. Risk may be presented in terms of risk indices, single numbers or tabulations that provide measures of individual or societal risk; these indices may be used in either an absolute or a relative sense.*

ED_002700_00005500-00097

EXHIBIT 6-1
Hazard Evaluation Procedures

HAZARD EVALUATION PROCEDURE	DESCRIPTION
Process/System Checklists	Checklists are written lists of items or procedural steps to verify the status of a system. They are intended to identify common hazards and ensure compliance with standard procedures.
Safety Reviews	Safety reviews are inspections that can vary from routine visual examinations to extensive, formal examinations of plant conditions or operating procedures. They are intended to ensure that operating and maintenance practices match the design intent and standards, and identify any new hazards.
Relative Ranking -- Dow and Mond Hazard Indices	Relative ranking should normally be performed before design completion, or early in the development of an existing hazard analysis program. The Dow and Mond Indices are examples of relative ranking.
Preliminary Hazard Analysis (PHA)	The PHA is used in the conceptual design or R&D phase of process plant development to aid in hazard reduction during final design. It focuses in a generalized way on the hazardous materials and major process areas of a plant.
"What If" Analysis	"What If" is a brainstorming approach intended to consider unexpected events that would produce an adverse consequence. The analysis uses questions beginning "What if" to identify possible accident event sequences, hazards, and consequences, and results in possible options for risk reduction.
Hazard and Operability (HazOp) Studies	HazOp studies are intended to identify hazards and operability problems in a process plant by identifying deviations from the plant design. An interdisciplinary team carries out the analysis and recommends changes or further studies.
Failure Modes, Effects, and Criticality Analysis (FMECA)	FMECA identifies the way equipment and systems fail (failure modes), based on an assessment of risks using a system of penalties and credits assigned to plant features.
Fault Tree Analysis (FTA)	Fault tree analysis focuses on one particular accident event; a graphic model is used to identify combinations of equipment failures and human errors that can cause that accident.
Event Tree Analysis	Event tree analysis is used to evaluate possible accident outcomes in terms of the sequence of events that follow an initiating event. The results can be used to specify safety features in plant design or to assess adequacy of existing safety features.
Cause-Consequence Analysis	Cause-consequence analysis is a combination of fault tree and event tree analysis. It is used to identify potential accident consequences and their causes.
Human Reliability Analysis	Human Reliability Analysis is used to evaluate the factors that influence the performance of plant personnel and identify potential human errors and their effects, as well as the causes of observed human errors.

Source: American Institute of Chemical Engineers, *Guidelines for Hazard Evaluation Procedures,* 1992.

ED_002700_00005500-00098

The strength of Quantitative Risk Assessment (QRA) is in determining incidents of high risk contribution at a specific facility. Through QRA, potential incidents can be ranked according to risk contribution, and mitigation methods can be developed to lower the probability and/or consequence of the potential incident. Typically, the highest ranked risk incidents will require different mitigation approaches, These approaches may vary from simple operational changes to addition of redundant equipment.

The results of quantitative risk analysis are strongly dependent on the data used. There is a variety of models available for estimating consequences, at many levels of complexity, and results may vary depending on the model used, the assumptions made, and the input data used. An assessment of the consequences of a toxic gas release depends on the dispersion model, the release conditions and environment, and the interpretation of toxicity data, which may be limited and subject to substantial error. In addition, historical data on incident frequency may be sparse or inappropriate (e.g., historical data on frequency of failure of equipment may not reflect changes in technology that have occurred).

The uncertainties in the models, the data, and the general analytical techniques should be considered. In addition, since there is no accepted standard QRA methodology or database, QRA should not be used to try to determine absolute facility risk. Absolute values can vary by several orders of magnitude as a result of differences in input data and assumptions. Use of QRA for comparison of overall risk among different facilities using different methods would require much care in interpreting the results.

Additional information on models specifically designed to address the behavior of HF upon release is provided in Chapter 9.

6.2.3 Industry-Wide Standards

Many industry-wide standards for design, testing, and maintenance of equipment have been published by various organizations, including the American National Standards Institute (ANSI), the American Society for Testing and Materials (ASTM), the American Society of Mechanical Engineers (ASME), and other standards development organizations and industry associations. Organizations and industry associations such as the American Petroleum Institute (API) and the Chemical Manufacturers Association (CMA) have been or will be developing standards and guidelines specifically for HF processes.

American Petroleum Institute

API is the petroleum industry's major trade association and has set a number of industry standards and performance requirements. API has also produced documents concerning the use of HF. In January of 1990, API issued Recommended Practice (RP) 750, Management of Process *Hazards*. This document outlines the key elements of a comprehensive program for managing all potentially hazardous processes. Focusing on HF alkylation units, in March of 1990 API issued *The Use of Hydrofluoric Acid in the Petroleum Refining Alkylation Process,* a background paper that outlines four systems that minimize the risks associated with the HF alkylation process.[9]

Because of recent increased concern about HF safety at petroleum refineries, API formed the HF Alkylation Committee to offer guidance to those facilities with HF alkylation units. The HF committee developed a recommended practice for safe operation of HF alkylation units which has been approved and given a designation of RP 751. The API Recommended Practice 751, *Safe Operation of Hydrofluoric Acid Alkylation Units,* was published in June 1992. RP 751 outlines many of the procedures and practices used effectively in the industry to minimize the process hazards of HF

ED_002700_00005500-00099

alkylation. The engineering systems and procedures described, when properly implemented, minimize the potential for an HF release, **mitigate** the effects of a release in the unlikely event that one occurs, and provide for oversight and audit of the entire process, The RP contains sections on:

- hazards management;
- operating procedures and worker protection;
- materials, maintenance, and inspection;
- transportation and inventory control; and
- relief, utility, and mitigation systems."

The National Petroleum Refiners Association, an association of domestic refiners, including large integrated petrochemical and refining companies as well as small and independent refiners, supports API's RP on hydrofluoric acid alkylation and has sent the RP to its member refineries.

In addition to written guidance, API gives lectures on the safe handling of HF in refineries."

Chemical Manufacturers Association

CMA supports research on specific chemicals germane to the industry and has taken steps to deal with HF. In the early **1980's**, HF producers and shippers developed mutual aid agreements to ensure round-the-clock emergency response to HF transportation incidents. Subsequently, the HF Mutual Aid Group was formed under the sponsorship of CMA. The HF Mutual Aid Group is comprised of specially trained teams that respond to emergencies involving HF. The group is activated by a call to the Chemical Transportation Emergency Center (CHEMTREC), the CMA hotline used by fire departments and other emergency responders across the United States to deal with chemical transport emergencies.'*

To enhance safety in the manufacture, transportation, and emergency response to HF, HF producing and using companies chartered the HF Panel under CMA. The Panel was formed to develop and maintain guidelines for the safe handling of HF. HF producers provide general and specific guidance to their customers. Through the Panel, HF producers and users cooperate to make safety, health, and environmental information available to the entire industry. The intent of the HF Panel is to enable all the participants in the North American HF industry to share expertise in the safe handling and use of HF. The Panel appoints experts to various Task Groups to improve specific aspects of safe handling. Current Task Groups address: Materials of Construction: Medical and Toxicology: Mutual Aid; Personal Protective Equipment; Storage Systems; Transportation; and Advocacy/Communications. In 1991, the panel expanded from its original membership of manufacturers and shippers to include HF users and suppliers of raw materials.

6.2.4 Industry-Wide Practices for HF Processes

The following are general industrial practices commonly used to address equipment failure and human error that also may be addressed by specific codes and standards, These practices typically address the special concerns of the HF industry (e.g., corrosion). The information was gathered from HF stakeholders and visits to facilities with established programs for safely handling HF. As a result, the practices described do not provide comprehensive overviews of the areas described. Rather, the following practices are a sample of what can be done to reduce hazards.

Equipment Failure

For the most part, industries that produce or use HF follow the same practices to guard against general equipment failure as other industries managing hazardous chemicals, The HF industry conducts regular testing, inspection and maintenance on equipment.

Corrosion. Facilities that manage anhydrous HF (e.g., petroleum refineries with HF alkylation, CFC manufacturers, HF producers) have significant concerns regarding equipment integrity. Corrosion can lead to loss of containment and must be guarded against through proper selection of materials, process operation, and maintenance of equipment. Carbon steel is used for anhydrous HF and aqueous HF 70 percent or greater in concentration. These steels are specifically chosen to minimize blistering. Proper welding materials and methods are required. Additional treatments may be required. Steels can develop a film of fluoride scale, which must be considered in the design and specification of equipment. Proper material selection is also required for process equipment, with the need determined by the specific chemical and process conditions. Often corrosion resistant alloys such as Monel, Hastelloy B, Alloy 20, and other materials are used. For aqueous solutions up to 70 percent HF, chlorobutyl rubber is often used. Teflon[TR] has been shown to be an acceptable material within certain temperature limits for service in process equipment such as transfer hoses. Polypropylene should not be used in anhydrous HF service.[13]

Because corrosion may present a problem in HF processes, inspection and maintenance is especially important. It is industry practice to monitor for corrosion by methods such as ultrasonic and acoustic emission testing. To identify cracks, fractures, or bad joints in metal equipment due to corrosion or mechanical stress, techniques such as eddy current testing, hydrotesting, radiography, and leak testing are utilized. Corrosion probes and visual inspection are also used. Hydrogen, which may be generated by the action of HF on steel, can induce cracking in improper welds in pressure vessels or areas of extreme stress or hardness. Hardness testing and corrective stress relieving procedures are widely used in the industry.[15] Cracking in welds in carbon steel pressure vessels in HF service can be prevented by taking proper care to reduce weld and heat affected zone hardness. Wet fluorescent magnetic particle inspection may be used to find cracks and other fractures.[16]

Inspection and Maintenance. For particularly critical equipment such as pumps, seals, and hoses, HF facilities typically have equipment-specific inspection and maintenance programs. A major focus is the integrity of flexible hoses that are used for HF loading/unloading. Typically, the hoses are hydrotested and also replaced frequently. Many HF facilities use guidelines from API, ASME, and ANSI to develop maintenance and inspection programs for equipment such as pressure vessels and heat exchangers." Non-process equipment, such as actuation points for alarms and interlocks, is also routinely tested." Although the maintenance and inspection program for equipment in HF service varies from industry to industry (i.e., from CFC manufacturer to alkylate producer), all of the HF facilities visited during this study seemed keenly aware of the need to have effective preventive maintenance programs for equipment in HF service.

Because of the considerable hazards posed by HF to human health, many HF facilities test, maintain, and inspect personal protective equipment at frequencies that meet or exceed OSHA requirements and to ensure worker safety. Most facilities have extensive written procedures to inspect HF personal protective equipment and train personnel to perform the inspection. Typically, HF protective gear is inspected and tested after each use to prevent worker exposure.[19]

Equipment Design. HF facilities can eliminate problem release points by sound equipment design. For example, pump seal failure has been mentioned frequently by facilities as a possible release point. Consequently, a few facilities are installing sealless pumps. This technology, however, is not yet proven where high pressure pumps are required (e.g., refinery alkylation). An alternative is double mechanical seals or dual or tandem seals which can help prevent releases.

In addition to pump seals, concerns about possible defective pipe seams, welds, and flange connections have led HF facilities to strengthen designs by specially treating all welds, using seamless pipes wherever possible, or using special gaskets in flanges. Welded piping is used wherever possible to minimize threaded connections and gasketed joints. Other practices are designed to

ED_002700_00005500-00101

avoid liquid HF traps, to minimize dead legs, and to equip piping with valves to isolate leaking equipment.

Overpressurization due to thermal expansion of HF is a major concern with liquid-full piping systems and vessels because it could lead to rupture. Where necessary, relief valves and rupture discs are used to prevent overpressurization.

Heat exchangers in which HF is cooled with water present the potential for contact between water and HF in the event of leakage. This can create corrosive acid. Proper maintenance and material of construction will guard against such equipment failure. Such heat exchanger systems are typically designed so that the HF liquid is at a higher pressure than the water, and if a leak occurs, the HF will leak into the water solution rather than vice versa, diluting the acid, reducing the heat generated, and ensuring that water does not enter the HF process stream. Potential leakage in heat exchangers can be monitored by equipping cooling water with fluoride or pH detectors.

Loss of *Utilities.* Utilities may be lost as the result of equipment failure. The loss of power, water, steam, or air at a facility handling HF and the effect this loss could have on HF processes and containment systems is an important safety consideration. Different industries may have different critical systems depending on the processes used. Facilities may have concerns regarding how emergency water deluge systems will be supplied and powered in the event of a storm or earthquake. A common solution to the problem of powering critical equipment is to provide backup electric generators or an uninterruptable power supply (UPS).

Human Error

Training programs for HF equipment maintenance personnel are largely developed by the individual facility. The programs may include lectures, field work, on-the-job training, or other approaches. The length of training will depend on the equipment and the type of facility. Many facilities use the training programs approved by **ASME**, American Society for Non-Destructive Testing (ASNT), and API.

Facility operators are also rigorously trained to operate equipment properly and to perform particular tasks according to standard operating procedures. Many sites use a combination of classroom, on-the-job training and proficiency testing to ensure the competency of control room and field operators and mechanics.

6.3 Specific Industry Hazards and Practices

The following sections discuss the hazards associated with equipment failure and the factors associated with human error in specific HF industry segments. Also, specific hazard evaluations and specific HF industry practices used to assess and address these hazards are discussed. The practices and evaluations are provided as examples of efforts by specific facilities, These examples may not be unique; however, the extent to which these practices and hazard evaluations are used throughout the industry is not known because these examples are based on a limited number of facility site visits and on select facility documentation.

ED_002700_00005500-00102

6.3.1 Hydrogen Fluoride Manufacturing

Equipment Failure

As discussed above, the integrity of equipment in HF service is a concern of the industry. To assure equipment reliability, the Allied-Signal HF production facility in Geismar, Louisiana uses a preventive maintenance program that identifies particularly critical equipment to protect from failure. Critical equipment includes pressure vessels, process relief valves, boiler relief valves, bolting for HF service, liquid HF piping and electrical substations. Also, Allied-Signal has a relief valve testing program that includes pretesting, disassembly, overhaul, bubble-tight pressure check, and set pressure check. As an auxiliary tool for testing electrical systems, infrared thermography is used to spot electrical problems characterized by a rise in temperature.[20] Further, when HF service equipment fails, Allied-Signal conducts a failure analysis to determine the cause of the failure and to recommend design changes, if necessary. To identify defective or poor quality equipment or materials from a vendor, Du Pont uses a Texas Nuclear Alloy Analyzer which verifies the composition of alloys used in their HF production facility in La Porte, Texas[21]

In the rotary kiln process used by Allied-Signal, failure of the seals on the kiln is a process hazard. Normally, the process is kept under vacuum; however, if the vacuum is lost and pressure builds up in the kiln, the kiln seals could fail. Additionally, the seals could fail if the kiln is plugged due to improper removal of byproduct gypsum. Unless precautions are taken, a seal rupture could result in a release of HF and other kiln gases. Even though, according to Allied-Signal, such an HF release would not likely endanger the public because the hot gases in the kiln would disperse high into the atmosphere, the facility has installed water spray scrubbers at the kiln seals. In the internal heater/reactor production method used by Du Pont, the main process hazard is also failure of the reactor seal.

Both the rotary kiln and the internally heated reactor production processes have similar hazards in condensing, purifying/distilling, and storing HF. The condensation step involves a flow of cooling fluid to cool the product gases. If HF is not cooled and condensed properly, the downstream and upstream processes can be upset. Cooling water systems can fail for several reasons including a loss of electricity, corrosion, and a loss of flow due to pump failure or other plugged equipment. Subsequent to this failure, an upset condition could result causing undue stress (e.g., overpressurization) on the process equipment. Likewise, in the purification/distillation step, overheating and overpressurization could result because this step requires large inputs of thermal energy and is operated under vacuum. Any of these hazards could result in a loss of containment of HF liquid or vapor. To guard against these hazards, HF producers have backup equipment available or the ability to stop reactant supply to the reactor. Critical process vessels are also provided with safety relief valves to prevent vessel rupture.

There are companies that purchase HF and repackage it for sale in varying concentrations. In repackaging operations, simple dilution or mixing operations may be subject to pipe failure, hose failure, pump failure, and human error. After use, the pump should be cleaned and any excess HF neutralized to prevent damage. Because of the relatively small quantities of HF used during these operations, mitigation measures are usually limited to leak plugging. The major hazards involved in HF wholesale operations are the rupture or failure of the HF container during transport or storage in the warehouse. A warehouse is typically provided with absorbent material, a dike to prevent spread of the liquid and leak plug equipment, and may have sprinklers to knock down vapors.

ED_002700_00005500-00103

Human Error

The two largest HF producers, Allied-Signal and Du Pont, have a large stake in ensuring that industries using their products handle them safely. Consequently, they both sponsor and conduct safety training for their customers. These HF producers also share their information resources on HF and provide guidance materials. Du Pont has set up steering committees to address the human and equipment factors surrounding HF safety. Du Pont has also developed a safety manual specifically for anhydrous HF.

6.3.2 Fluorocarbon Production

The HF used in the production of CFCs is consumed early in the process. Consequently, the HF hazards of concern focus on the initial stages of the process, including the safe flow of HF into large storage vessels, the pumping of HF from the storage vessels into the reactor, the purification of the CFC products, and the control of the elevated temperature and pressure in the reactor. HF hazards are of less concern during the recovery step when only a small amount of unreacted HF is recycled. HCFC facilities are similar to CFC production units in that HF is consumed early in the process. Routes to HFCs typically begin with CFC or HCFC raw materials.

Equipment Failure

CFC reactor equipment consists of vessels, pipes, pumps, valves, heat exchangers, and instruments containing HF. Failure of any of these due to mechanical or chemical stress can lead to an HF liquid or vapor release. Many CFC producers prefer to use **sealless** pumps, thus eliminating the potential leak through pump seals. Other areas of concern are flange leaks and corrosion of piping and vessels, Fluorocarbon producers are aware of these potential hazards due to the increased corrosivity of aqueous HF and take extreme care to avoid and correct any water in the feed stock.

CFC reactors are operated at elevated temperatures and pressures in order to maximize conversion and reduce energy consumption. The fluorination step is slightly exothermic; however, the overall reaction is endothermic, requiring heat to be added in order to obtain high yields. As in other HF-consuming processes, the amount of HF in the reaction vessel is kept at a minimum. The reaction vessel contains mainly the chlorinated hydrocarbon and catalyst, with the majority of HF consumed as it is added.[22]

Operator error or equipment failure could cause overpressurization of the process. As in other HF-consuming processes, this is addressed primarily through standard operating procedures (SOPs), training, inspection, maintenance, automatic shutdown systems, and relief valves.

A loss of electricity in the CFC manufacturing process would cause the HF feed pump and the process cooling system to stop. As soon as the HF feeds are stopped, the fluorination reaction stops reducing the potential for overpressurization of the reaction system. Loss of a cooling system is addressed with **SOPs** and electrical back up of key emergency vent systems to abatement devices.

Human Error

Du Pont's rigorous HF training program covers CFC production. This training program is also offered to other CFC producers.

6.3.3 Alkylate Production

Concern about hazards and potential HF release points are especially critical where large quantities of HF are stored or used. Particular areas of concern in an alkylation unit include the reactor, the settler, the acid circulation circuit, and the HF storage vessel. The following discussion presents some examples of hazards. It is not intended to be a description of all possibilities.

Equipment Failure

Some facilities have installed isolation valves in the reactor section for isolation of equipment in emergencies. The isolated equipment is vulnerable to overpressurization in certain circumstances, and relief systems are necessary. Relief valves in the reactor section would release HF and hydrocarbons to an HF scrubbing and neutralization system and to flare in the event of overpressurization. Pressure would otherwise be relieved at a low elevation in the isostripper. This allows for relief of mostly hydrocarbons and minimizes the potential for acid relief.[23]

The HF in the reactor can become contaminated with water and impurities introduced to the process with the feedstocks. If left unchecked, this may lead to corrosion of process equipment and the potential for release of HF. Consequently, feedstocks are typically dried before entering the reactor. Neutralization systems are particularly susceptible to corrosion. Radiographic examination can be used on piping to determine the effect of corrosion on wall thickness. A Mobil refinery checks for flaws in all its welds by conducting radiographic examination and dye penetrant testing. In other parts of both alkylation processes where HF is found in small quantities, the corrosivity of HF can cause equipment failure and accidental releases. Thus, pH meters are installed in cooling water systems for early detection of HF concentration.[24] Also, in the presence of low HF concentrations, valves can fail to seal because of fluoride deposits.

In the UOP process, an acid circulation pump seal failure could result in an HF release. Another potential cause of an HF release is the failure of attachments or connections (e.g., piping, nozzles, or instruments) to HF process or storage vessels. In the past, several refineries have had releases because of broken sight glasses on HF process vessels. Consequently, many facilities are replacing sight glasses with magnetic and nuclear level indicators on vessels. The UOP design calls for double-seals in the acid circulation pump and remote shut-off valves to minimize a potential HF release. Additionally, HF sensitive paint may be used to identify small releases or leaks at a flange joint that may not be visible otherwise.[25]

The Phillips reactor employs an acid circulating design with no acid circulation pump and no sight glasses but does contain a larger HF inventory compared to some UOP designs. However, the Phillips process runs at a lower pressure which can reduce the rate and quantity of a release.

The use and production of flammable hydrocarbons in the alkylation process adds the potential for fire and explosion hazards. Such events could impact vessels containing HF. To guard against fire hazards, detection of flammable gases is a general priority at petroleum refineries. In the event of a fire or explosion, HF stored or located nearby could be released and heated by the fire. Such a release may not pose a significant hazard to the public, because the hot HF would be highly buoyant and disperse easily. However, other explosions could cause rupture of distant HF pipes or vessels, where the HF might not be heated by the fire upon release.

UOP and Phillips, the major licensors of HF alkylation processes, provide their licensees with lists of approved HF service equipment and schedules for maintenance. Also, in a BP refinery, as an example of quality control, materials intended for use in alkylation units undergo special inspection upon receipt to assure proper material and parts are used,

ED_002700_00005500-00105

API's recommended practice, *Safe Operation of Hydrofluoric Acid Alkylation* Units, provides petroleum refineries with suggested maintenance methods, recommended inspection frequency for various equipment in HF service, and the latest and most reliable techniques for equipment replacement and repair. Individual refineries can use these resources to develop their own preventive maintenance programs to meet individual needs.

Contact between incompatible materials can cause an HF release. In the HF alkylation process, the uncontrolled contact of HF with caustic and alumina is an example of such a concern. An example of the results of such an incident is the explosion and fire that occurred in 1987 at Mobil Oil Corporation's refinery in Torrance, California. The incident apparently occurred because procedures and instruments failed to control the HF level which resulted in a flow of HF to the propane treater. The resulting reaction between HF and potassium hydroxide created high pressure in the treater, which caused the vessel to rupture and release flammable hydrocarbons. Subsequently, a fire started that was fueled by a mixture of propane and butane coming from nearby pipelines that were also ruptured in the explosion of the propane treater.[27]

Process upsets can present a hazard during alkylation. For example, an upset in the feed dryers of the alkylation unit can result in increased water levels in the HF circulation streams. This could cause corrosion or, as in one case, increase the rate of acid soluble oil **(ASO)** production, High AS0 levels could result in HF regeneration upsets. Such an upset could increase the amount of HF sent to the process heater where AS0 may be burned, leading to a possible release of gaseous HF through the process heater **stack.**[28]

Loss of electric power can lead to process upsets and, therefore, is also a significant concern. Many of the processes in an alkylation unit are run by electricity. For example, pumps used to circulate cooling water could be disabled, allowing the process to heat up and possibly lift a relief valve. A standard response to an electrical failure in an alkylation unit, however, would be to cut out the olefin feed in order to stop the reaction. The power failure that disabled the cooling pump would likely take out the olefin feed pump as well, eliminating one of the reactants. In addition, motor driven pumps are often backed up by pumps driven by steam turbines.[29] Further, refineries are usually provided with backup uninterruptable power systems (UPS) to guard against a loss of electric power.

Human Error

To minimize human error contributing to an HF release, the API's recommended practice, *Safe Operation of Hydrofluoric Acid Alkylarion Units,* suggests training programs for HF operators, non-operating personnel, maintenance workers, emergency responders, medical response personnel, and workers using personal protective equipment (PPE), To ensure operating procedures are standardized at HF alkylation units, the recommended practice specifies the need for a facility operating manual that covers procedures on HF release detection and response, first aid, acid sampling, unit neutralization and **dryout**, unloading HF, emergency procedures, and testing of critical alarms, isolation, and mitigation devices. In addition, the recommended practice provides procedures and training guidance for inspecting, testing, cleaning, and maintaining PPE.

For maintenance personnel, some general training and **SOPs** are provided by companies that license the HF alkylation unit or design the facility.[30] In the New Orleans area, several refineries jointly sponsor a training academy called the Greater New Orleans Industrial Education Council. The purpose of the council is to teach contractors about general maintenance and process safety techniques to ensure high standards for contractor performance. After such training, the contractor still needs site-specific training at the individual **refinery.**[31] Similar industry-sponsored training programs exist in Texas City, Texas.

The British Petroleum (BP) refinery in Louisiana has developed a particularly comprehensive program for shutdown maintenance performed by contractor personnel. One part of the BP program provides maintenance procedures for contractors to safely handle HF and to assure proper material installation during a maintenance shutdown.[32,33]

Hazard Evaluation

Hazard evaluations have been conducted by several petroleum refineries on their HF alkylation units, The following are descriptions of hazard evaluations and risk assessments conducted by several petroleum refineries.

Powerine Oil Company. Powerine Oil Company, as part of a California-required Risk Management and Prevention Program (RMPP) for its use of HF in the alkylation unit of its Santa Fe Springs, California, refinery, carried out a hazard evaluation study to identify possible hazards that could be caused by operator error, equipment failure, or external events resulting in a release. The hazard evaluation consisted of a safety review, or HazOp (What If analysis, Guide word analysis), and seismic assessment.

Consequence analysis was carried out for several scenarios identified by the HazOp analysis as potentially leading to HF releases. These scenarios represented conditions that could occur during truck unloading, storage, and processing of HF, and were considered to represent the highest potential for significant impact on public health and safety. The scenarios modeled were a truck unloading accident, ruptures at the bottom and top of the acid storage drum, a rupture at the top of the isostripper, and failure of the seal on the acid recirculation pump.

Ultramar. Ultramar, a petroleum refinery in the Long Beach, California, area, carried out a HazOp and Fault Tree analysis at its HF alkylation unit to identify potential hazards, and to satisfy the RMPP requirements of the state of California. Ultramar systematically analyzed all parts of the unit and the operating procedures to determine ways in which HF could be released.[34] Some "most likely hazards" that were identified from the HazOp and Fault Tree analyses included pump seal rupture, releases during truck unloading, and a release following a severe earthquake. This analysis led to 111 recommendations for design or procedural changes to the unit. Examples of some of the recommendations that were implemented include updating and reissuing HF truck unloading procedures, conducting a pressure survey for all HF unit pump seals, and replacing certain valves.

Ultramar also carried out a quantitative risk assessment of its HF alkylation unit, using air dispersion modeling and quantitative Fault Tree analysis, considering local conditions and population, as well as HF toxicity data. The results were used to calculate the risk of a number of different HF releases in terms of mean societal risk or fatalities per year. The types of releases found to represent the highest risk were rupture of acid settlers, serious leakage from settlers, and serious leakage as a result of fire or explosion.

Phillips Petroleum Company. Phillips Petroleum Company conducted a quantitative risk assessment of both the HF alkylation and the sulfuric acid alkylation processes. The study evaluated the direct risks from the unit, associated risks from acid transportation, and the benefits of risk mitigation for the Phillips design HF alkylation unit in densely and sparsely populated areas. The analysis indicated that the risks are sensitive to plant siting. It also showed that risks from the alkylation unit could be reduced through mitigation measures (e.g., emergency shutoff valves, acid dump system), design modifications (e.g., remove acid circulation pumps), and proper process management.[35]

BP Oil. BP Oil has an HF Alkylation QRA Program to conduct quantitative risk assessments (QRA) for their refineries worldwide that have HF alkylation units (three are located in the U.S.). BP's

ED_002700_00005500-00107

QRA process involves extensive audits of the units and their operation, evaluation of the frequency and consequences associated with all potential HF release sources, determination of risk and appropriate acceptability criteria, cost-benefit analyses, identification and evaluation of risk mitigation measures, and determination of sensitivities and uncertainties. The BP program stresses that QRA is a decision aiding tool and should not to be used as the sole basis for decisions that could have significant cost and operational impacts. BP has used the results of QRA not only in concept studies and detailed design for new installations and major projects, but also to evaluate existing installations and operations.

6.3.4 Transportation and Storage

HF can be released during transit and during unloading/loading operations. Most industry sources consider the greatest potential risk of a release to occur during loading/unloading rather than during transport or processing because of the use of temporary connections and multiple handling operations. This is confirmed by various hazard evaluations from facilities with HF alkylation units. Most HF releases during loading/unloading operations result from corrosion of the equipment or a failure to follow standard operating procedures.[37]

Equipment Failure

Both HF producers and users frequently mention their concern about the failure of transfer hoses during loading/unloading operations. For this reason, extensive procedures and hazard reduction techniques are followed when hose transfer takes place. Pressure testing the hose with compressed nitrogen gas is generally performed before placing the hose in HF service and the use of quick-acting, remotely-actuated shut-off valves are employed to minimize HF transfer problems.[38] For the compressed gas unloading method, there is the hazard of overpressurization; for the pump method, there is also the hazard of pump or pump seal failure.

Facilities have had to choose loading/unloading equipment and transport packaging materials carefully because of the corrosive properties of HF in the presence of moisture. Many metals will corrode when in contact with aqueous solutions of HF or with anhydrous HF in the presence of moisture. Therefore, transportation piping, valves, vessels, and hoses may fail unless precautions are taken to prevent corrosion.[39] In addition, the transfer hose used is a specially designed heavy duty hose. Facilities are also concerned with valves that may be susceptible to fluoride scaling and subsequent inability to seat as a result of scale accumulation.

HF can be released as a result of a transportation accident. When compared with other hazardous substances produced and transported in high volumes, such as sulfuric acid, chlorine, or ammonia, the frequency of HF shipment is low, and therefore the likelihood of transportation accidents involving release of HF is expected to be lower. In fact, according to incident data from the Department of Transportation's (DOT) Hazardous Materials Information Systems (HMIS) for transportation accidents involving hazardous materials, only 0.27 percent of all incidents reported in 1987 involved HF. Nevertheless, facilities receiving HF shipments recognize that a release of HF from a truck or tank car could pose significant off-site impacts (see Chapter 8 for discussion of transportation accidents).

To prevent a release of HF, the transport containers and equipment provided by Allied-Signal and Du Pont are overdesigned for safety. In fact, the HF producers that transport HF throughout the country often exceed what is required of them by law to ensure safety. For example, according to DOT regulations rail cars in anhydrous HF service must be constructed of steel that is at least 0.4 inch thick. Du Pont uses rail tank cars that are constructed of one inch thick steel as recommended by the American Society of Mechanical Engineers (ASME). Du Pont tank trucks are constructed of 0.5 inch thick steel. in addition, both Du Pont and Allied-Signal utilize headshields and shelf couplers on their

ED_002700_00005500-00108

HF rail cars (even though not required by DOT regulations) to protect the tanks in the event of a derailment.

In addition to DOT requirements, the Association of American Railroads (AAR) has published a Manual of Standards and Recommended Practices, which details requirements for tank cars that will transport anhydrous HF. These include prohibition of bottom openings, specific heat treatments for tank material and welds, use of non-corrosive valves and fasteners, and specifications for safety relief valves.[40] Safety relief valves on tank cars and trucks are used to release HF gas in the event of overpressurization. These valves are protected by extra heavy rollover type domes which provide mechanical protection to these valves. In conformance with AAR standards, bottom outlet valves are not used on trucks in anhydrous HF service.[41] Another mitigation procedure involves transfer hoses, which are pressure tested every six months, replaced yearly, and specially stored to prevent kinking[42] In the event of a release during transportation, hazardous chemical information and emergency response is available through the CHEMTREC hotline sponsored by CMA.

The raised valves used for loading and unloading HF are contained within a roll-over protection dome on top of transport vessels. To stop an in-progress HF release from defective valves, both HF producers have developed emergency capping kits. Du Pont and Allied-Signal have adapted the chlorine capping kit for use on HF assemblies. Regardless of the design, the emergency capping kit is placed over the leaking/defective valves on top of the rail car or truck. Du Pont also uses valves on some tank trucks that were designed such that if the valves on the top of the vehicle are sheared off, a secondary internal valve will prevent an HF release.[43] This is an European design that Du Pont would like to further evaluate for use in the US.

HF storage vessels are susceptible to hydrogen blistering, weld hardness, and stress corrosion cracking. To guard against vessel failure, HF producers use corrosion resistant equipment and conduct regular inspection and maintenance. HF storage tanks are also manufactured to comply with current ASME code for Unfired Pressure Vessels which includes specifications for corrosion allowance and minimum thickness.[44] HF tanks are installed above ground and are usually supported by structural steel or concrete saddles. Because HF can pool and fume if released from the tank when the HF is stored at atmospheric temperature and pressure, facilities that have a bottom outlet have developed drainage patterns to divert the spillage to a containment area away from the tank.[45]

Overfilling of HF storage tanks also is a hazard that can result in an HF release. Overpressurization of an HF storage tank, which can cause HF to be released through a relief valve, might occur if the tank is overpressurized with nitrogen, for example, during the unloading of HF or if an HF tank is overheated. The Allied-Signal facility in El Segundo keeps its HF storage cool using an internal refrigerated coil and insulation. Also, the storage vessels are enclosed in a buildin At 3M, HF storage tanks are enclosed in a cooled building, and the HF is kept at -40 degrees C.[46] Cooling the HF below its boiling point will result in pool formation rather than a vapor release. Industry also uses redundant level indicators, safety interlocks, pressure gauges, and alarms to address these hazards. For each tank, a facility usually develops an individual plan for acid delivery, inventory, maintenance, cleaning, monitoring, and emergency response.

Human Error

Training standards for drivers and for personnel who unload and load HF are provided mainly by Allied-Signal and Du Pont rather than HF users. To assure highly trained and experienced personnel and well-maintained equipment, both HF producers have professional drivers and dedicated fleets of trucks and rail cars. Both have rigorous training programs for drivers of HF vehicles which address the hazards of HF, first aid, unloading procedures, and operation of the safety features of shipping containers. Allied-Signal selects drivers based on road tests, drug tests, and other screening

ED_002700_00005500-00109

methods. Once selected, the drivers must attend classes on such topics as proper unloading/loading techniques, personal protection equipment, DOT requirements, Community Right-To-Know laws, and emergency procedures.[47] Hands-on experience is gained donning PPE (e.g., Scott air pack), handling emergency equipment (e.g., chlorine capping kit), completing safety checklists, and observing and participating in unloading/loading operations. Certification and recertification are required.[48]

To reduce the risk posed by transporting HF, HF shippers conduct route risk analysis. Allied-Signal has conducted extensive route risk analysis for all its HF deliveries which average distances of 1,000 miles[49,50,51] In addition, Allied-Signal has installed a satellite tracking system to track HF truck transport vehicles. If there is a problem en route, drivers can communicate immediately with headquarters and emergency response personnel. This system allows for better control of shipments and possibly faster response in an emergency.[52]

Hazard Evaluation

Du Pont's CFC facility in Antioch, California, prepared an Off-Site Consequence Analysis Report which included a hazard analysis for HF based on HazOp studies as a supplement to a required Risk Management and Prevention Plan submitted to Contra Costa County. Potential HF events were rated according to probability of release and severity of consequences, using a qualitative rating and the most severe events were chosen for modeling analysis. None involved the CFC process. Of the three events chosen, two were related to transportation and the third was related to storage. For HF, the event considered to have the largest potential consequence was a corrosion hole in a transfer line between a tank car and a storage tank or the tank recirculation line. Such a hole could be caused if excessive amounts of moisture entered the system. "High" severity consequences were defined as potential serious injuries or death to exposed individuals. The probability of occurrence was considered low, however, because of operating procedures and because the transfer line is only used eight to ten hours per week. "Low" probability was defined as unlikely occurrence during the expected lifetime of the facility assuming normal operation and maintenance. This event was modeled to estimate consequences both before and after completion of a planned HF simplification and mitigation project at the Du Pont facility.

The second event modeled was a corrosion leak in a storage tank because it was considered to have high potential consequences. The likelihood of this event was also considered low. Failure of a tank car angle valve was the third event modeled. The likelihood of this event was considered high, defined as likely to occur at least once during the expected lifetime of the facility (in fact, such an event had actually occurred at the facility, but the consequences were not severe).

6.3.5. Other Uses

Uranium Processing. In uranium processing plants, hazards associated with HF arise from the potential for a release of either HF or UF_6 If UF_6 is released, it will immediately decompose into the airborne toxic products, uranyl fluoride and HF. The Nuclear Regulatory Commission (NRC) has been studying the side reactions and decomposition of UF_6 To ensure safety in operating HF uranium processing plants, NRC is requiring risk assessments as part of the permitting process.

Aluminum Fluoride and Aluminum Manufacturing. The major process hazards associated with aluminum fluoride manufacture center on the reliability of the power distribution system. The major process hazards in the aluminum reduction electrolytic cell (pot) and in the air control system are a loss of electricity and plugged equipment. Monitoring devices related to these hazards include a meter to detect vibration or a loss of electricity and detection equipment to measure ambient HF.[53]

ED_002700_00005500-00110

Production of Electronic Aqueous HF. The General Chemical Bay Point Corporation, Bay Point Works, which uses anhydrous HF to produce electronic aqueous HF, carried out an off-site consequence analysis for two scenarios, both of which were considered to be of low probability and high consequence. One scenario was the failure of the railcar unloading line (see Section 6.3.4, Transportation and Storage, for a discussion of unloading and loading operations); the other was failure of the anhydrous HF storage tank pressure relief system. Neither of these scenarios would be unique to the electronic HF production process. The Bay Point Plant also reported a number of planned mitigation/risk reduction steps for its HF processes, including alarms if water flow to the absorption column is reduced or stopped, or if the primary or secondary scrubber liquid lines have low pressure; locks on pressure relief block valves to insure that these valves are not inadvertently closed; development of a preventive maintenance program for instruments and safety equipment, including annual testing and maintenance of pressure relief devices; development and updating of operating manuals, including loading and unloading procedures; and formalization and improvement of operator training for handling HF, including operating procedures and emergency response.[54]

Electronics Manufacture. Because electronics manufacturing uses aqueous HF below the fuming concentration and because the dipping process is highly controlled to ensure system purity, the industry is relatively free from process hazards. To eliminate any possible corrosion problems, teflon tubes and polypropylene pump housings are used. HF releases would be very unlikely to have off-site impacts.

Pickling, Etching, and Coating. Because the steel pickling process uses solutions of HF in concentrations of 70 percent and less, the hazards to the public are not as great as those associated with processes using anhydrous HF, such as alkylation. An accidental release of aqueous HF would stay in liquid form rather than aerosolize and therefore could be contained and the release mitigated. However, at these concentrations, HF poses an increased corrosion problem and still maintains the potential to cause damage to the environment.

Dissolving Ores to Produce Tantalum and Columbium Metals. Aqueous HF is extremely corrosive to certain equipment, making equipment corrosion the major hazard in the process to produce tantalum and columbium processes. In addition, as aqueous HF is transferred between process areas, the potential of pump seal failure or pipe corrosion exists which could cause a release.

Linear Alkylbenzene (LAB) Production. To prevent HF releases, Vista Chemical uses only HF-compatible materials in maintenance, design and construction activities, such as in vessels, pipes, fittings, gaskets, nuts, bolts, flanges, valves, vents and bleeders. The company inspects HF equipment at least every two years. The HF process area at Vista has a full-time maintenance person who checks for leaks and spills. In the past three years, they have taken a major step towards reducing HF hazards by eliminating several major process vessels from HF service. This change reduces HF process volume by almost 50 percent, reducing the sources of potential leaks and spills, such as pumps, flanges, valves, vents, bleeders and the vessels themselves. In addition, the company conducts HF training annually, requires LAB personnel to attend a yearly Du Pont seminar on HF safety, and carries out personal protective equipment training and emergency drills.[55]

Pharmaceutical Production. Hoechst Celanese, which uses HF in a bulk pharmaceutical process, reports that all equipment that may vent HF is connected to a potassium hydroxide scrubber system that absorbs and neutralizes HF. This scrubber vents to a 200 foot flare. The potassium hydroxide is routinely analyzed once per shift. The HF equipment is also connected to an emergency scrubber system through rupture disks and pressure release valves. If vessels or pipes have to be opened to the atmosphere, an evacuation system that vents through a sodium hydroxide scrubber system is used. A water curtain/deluge system can be activated if a leak to the atmosphere develops. A design HazOp study was performed before the plant was built, and Hoechst Celanese performs a Process Safety Review every five years. The plant has 17 HF monitors that alarm both locally and in

ED_002700_00005500-00111

the control room; there is also a remotely operated camera that can be used to monitor the HF area from the control room.[56]

6.4 Research Efforts to Modify or Substitute Hydrogen Fluoride in Alkylation

Another method of preventing releases of a hazardous substance is to modify the properties of the substance to reduce its hazard or to identify a less hazardous material that can be used as a substitute. Research and development is being conducted on modification of the properties of anhydrous HF, use of alternative liquid catalysts, and use of alternative solid catalysts. Research on modification of the properties of anhydrous HF includes work being done by Mobil Oil Company, as well as a joint effort by UOP and Texaco,[57] to use additives to reduce aerosolization and encourage rain out. in small scale tests, ninety percent reduction of aerosolization with no loss of alkylation performance has been claimed.[58] Future work will include large scale release tests, process demonstration, modeling for risk reduction, and commercial demonstration. Another example of research designed to reduce the hazards of HF is Phillips Petroleum's work on system modifications to reduce volatility of HF and significantly lower inventories of HF.

Research into liquid and solid catalysts that can serve as substitutes for HF in alkylation has been underway for more than fifteen years. Both boron trifluoride and zeolites were studied in the late 1970's as alternatives to HF or sulfuric acid. These solid catalysts, although they offer a safe alternative to HF, were subject to rapid deactivation and were determined to be too costly for large scale use.[59] Research has been performed to determine the alkylating ability of various catalyst complexes such as ethyl fluoride-antimony pentafluoride complexes, hydrogen fluoride-tantalum pentafluoride mixtures, tantalum pentafluoride-aluminum pentafluoride, antimony pentafluoride-graphite, and a fluorosulfurous acid-antimony pentafluoride complex.[60] Aluminum trichloride has been studied as an alternative liquid catalyst, with limited success.[61]

As recently as February 1992, three companies, Catalytica; Conoco, a subsidiary of Du Pont; and the Finnish oil company, Neste Oy, announced a joint venture for the development of a commercial catalytic alkylation process based on a proprietary solid catalyst developed by Catalytica. If pilot tests are successful, a solid catalyst could become available in the production of alkylate. The joint venture anticipates an operational pilot plant in Finland by Fall 1992. A solid catalyst would eliminate the potential for airborne HF release.[62] Another alternative, a super acid catalyst supported on a solid medium, is being developed by M.W.Kellogg and Haldor Topsoe A/S.[63]

ED_002700_00005500-00112

ENDNOTES

1. American institute of Chemical Engineers, *Technical Management of Chemical Process Safety,* Center for Chemical Process Safety, New York, 1989. (10.467)

2. American Institute of Chemical Engineers, *Technical Management of Chemical Process Safety.*

3. U.S. Environmental Protection Agency, Review *of Emergency Systems, Report to Congress, Section 305(b) Title III Superfund Amendments and Reauthorization Act of 1986,* Office of Solid Waste and Emergency Response, Washington, D.C., May 1988. (489.92)

4. American Institute of Chemical Engineers, *Technical Management of Chemical Process Safety.*

5. Du Pont Chemicals, *Draft AHF Safety Guardian Manual,* Wilmington, DE, December 18, 1991. (137.8)

6. American Institute of Chemical Engineers, *Guidelines for Hazard Evaluation Procedures,* Center for Chemical Process Safety, New York, NY, 1985. Prepared by Battelle Columbus Division. (10.465)

7. American Institute of Chemical Engineers, *Guidelines for Hazard* Evaluation Procedures.

8. American Institute of Chemical Engineers, Guidelines *for Chemical Process Quantitative Risk* Analysis, Center for Chemical Process Safety, New York, NY, 1989. (10.46)

9. API HF Alkylation Committee, *Hydrofluoric Acid Alkylation Unit Safety, API Recommended Practice (Draft),* September 11, 1991. (190)

10. American Petroleum institute (API), *Safe Operation of Hydrofluoric Acid Alkylation Units, API Recommended Practice* 757, First Edition, June 1992. (10.6)

11. *Safe Handling of Hydrofluoric Acid* in *Refineries,* Presented to Manufacturing Safety Subcommittee, American Petroleum Institute, Committee on Safety and Fire Protection Meeting, Ft. Lauderdale, Florida, April 6, 1983. (426)

12. U.S. Environmental Protection Agency, *The Hydrogen FluoridelHydrofluoric Acid Industry,* Washington, DC, May 7, 1991. Prepared by the Chemical Manufacturers Association Hydrogen Fluoride Panel. (270)

13. Seringer, Carolyn S., Du Pont Chemicals, comments from technical review of Hydrogen *Fluoride Study Report to Congress,* Draft May 8, 1992, June 5, 1992. (436.4)

14. Mobil Oil Corporation Torrance Refinery, Hydrofluoric *Acid Alkylation Unit Risk Management and Prevention Program Report,* Torrance, CA, March 16, 1989. (185)

15. Hague, William J., Allied-Signal, comments from technical review of *Hydrogen Fluoride Study Report to Congress,* Draft May 8, 1992, June 10, 1992. (153)

16. Seringer, Carolyn S., Du Pont Chemicals.

17. API HF Alkylation Committee.

18. *Ultramar HF Alkylation Unit Risk Management and Prevention Program,* **Ultramar** Refining, inc., Wilmington, CA, April 1990. Prepared by Science Applications international, McLean, VA. (42433)

19. Mobil Oil Corporation Torrance Refinery.

20. Allied-Signal Inc., *Allied-Signal Inc., HF Production-Geismar Plant, MaintenancelReliability Programs,* HF Products Group, Geismar, LA, February 1992. (147.1B)

21. Facility visit by U.S. Environmental Protection Agency to Du Pont, La Porte, TX, December 12, 1991. (620)

22. Seringer, Carolyn S., Du Pont Chemicals.

23. Puschinsky, Bob, Alkylation Technologies and Sulfuric Acid Production Consulting comments from technical review of *Hydrogen Fluoride Study, Report to Congress,* Draft May 8, 1992, June 28, 1992. (377)

24. Phillips Petroleum Company, comments from technical review of *Hydrogen Fluoride Study, Report to Congress,* Draft May 8, 1992. (370.92)

25. Morris, Jeff, American Petroleum Institute, **Fina** Oil and Chemical Company, comments from technical review of *Hydrogen Fluoride Study, Report to Congress,* Draft May 8, 1992, June 1, 1992. (344)

26. Mobil Oil Corporation Torrance Refinery.

27. Rabin, Jeffrey L., "Mobil Refinery Explosion Rekindles Safety Debate," Los Angeles *Times,* December 20, 1987, p B12. (421.25)

28. U.S. Environmental Protection Agency, *U.S. EPA Release Prevention Questionnaires,* 1987-1988. (490)

29. **Mudan**, Krishna S., **Technica** Inc., comments from technical review *of Hydrogen Fluoride Study, Report to Congress,* Draft May 8, 1992, June 1, 1992. (360.2)

30. API HF Alkylation Committee.

31. Facility visit by US. Environmental Protection Agency to **British** Petroleum, New Orleans, LA, January 13, 1992. (630)

32. Facility visit by U.S. Environmental Protection Agency to British Petroleum.

33. BP Oil, *BP Oil US Refining Contractor Safety Program. (75)*

34. *Ultramar HF Alkylation Unit Risk Management and Prevention Program.*

35. **Technica** inc., *Quantitative Risk Assessments of Generic Hydrofluoric Acid and Sulfuric Acid Alkylation Units for Phillips Petroleum Company, Management Summary,* May 1990. (420)

36. API HF Alkylation Committee,

37. U.S. Environmental Protection Agency, *U.S. EPA Release Prevention Questionnaires,* 1987-1988. (490)

38. Hague, William J., Allied-Signal.

39. Du Pont Chemicals, *Hydrofluoric Acid, Anhydrous - Technical: Properties, Uses, Storage and Handling,* Wilmington, DE. (137.5)

40. Association of American Railroads, Manual *of* Standards and Recommended Practices: *Specifications for Tank Cars, Section* 2.7.7, 'Hydrogen Fluoride, Anhydrous." (48)

41. Seringer, Carolyn S., Du Pont Chemicals.

42. Phillips Petroleum Company, comments from technical review of *Hydrogen Fluoride Study, Report to Congress,* Draft May 8, 1992. (370.92)

43. Facility visit by U.S. Environmental Protection Agency to Du Pont, La Porte, TX, December 12, 1991. (620)

44. Allied-Signal, inc., *Anhydrous Hydrofluoric Acid,* The HF Products Group, Morristown, NJ. (17)

45. Du Pont Chemicals, *Hydrofluoric Acid, Anhydrous.*

46. Chow, C.S., 3M, comments from technical review of *Hydrogen Fluoride Study, Report to Congress,* Draft May 8, 1992, June 3, 1992. (122)

47. Facility visit by U.S. Environmental Protection Agency to Allied-Signal, Geismar, LA, October **11, 1991**. (650)

48. API HF Alkylation Committee.

49. Allied-Signal Inc., *Risk Assessment of Hydrogen Fluoride Transportation Routes (Routes Originating at El Segundo, CA),* Morristown, NJ, March 28, 1989. Prepared by ICF Technology Inc., Fairfax, VA. (424.1)

50. Allied-Signal Inc., *Risk Assessment of Hydrogen Fluoride Transportation Routes (Routes Originating at Amherstberg, ONT),* Morristown, NJ, March 28, 1989. Prepared by ICF Technology Inc., Fairfax, VA. (424.2)

51. Allied-Signal Inc., *Risk Assessment of Hydrogen Fluoride Transportation Routes (Routes Originating at Geismar,* LA), Morristown, NJ, May 23, 1989. Prepared by ICF Technology Inc., Fairfax, VA. (424.3)

52. Facility visit by U.S. Environmental Protection Agency to Allied-Signal.

53. U.S. Environmental Protection Agency, *U.S. EPA Release Prevention Questionnaires.*

54. General Chemical Corporation, Bay Point Off-Site Consequence Analysis, Engineering and Research, inc., pp 8-44. (141.5C)

55. Vista Chemical Company, *HF Overview,* Lake Charles Lab Plant, Westlake, LA. (497.8)

ED_002700_00005500-00115

56. Hanlon, Richard G., Hoechst Celanese Corporation, comments from technical review of *Hydrogen Fluoride Study, Report* to *Congress,* Draft May 8, 1992, May 28, 1992. (192)

57. Meeting between U.S. Environmental Protection Agency and UOP/Texaco, June, 1992.

58. Meeting between U.S. Environmental Protection Agency and Mobil, January 28, 1992.

59. Albright, Lyle F., "H_2SO_4, HF Processes Compared, and New Technologies Revealed," Oil and *Gas Journal,* November 26, 1990, p 70-77. (10.1)

60. Olah, George A., G.K. Surya Prakash, and Jean Sommer, *Superacids,* John Wiley & Sons inc., New York, 1985. (369)

61. Albright, Lyle F.

62. *Chemical and Engineering* News, "Gasoline Alkylation Process to be Commercialized," February 10, 1992, p 24. (141)

63. Letter, *Preliminary Findings-Hydrogen Fluoride* Study, From: William J. Hillier, The M.W.Kellogg Company, To: Ed Freedman, U.S. Environmental Protection Agency, July 9, 1993. (298)

ED_002700_00005500-00116

This page intentionally left blank.

ED_002700_00005500-00117

7. INDUSTRY PRACTICES TO DETECT AND MITIGATE HYDROGEN FLUORIDE RELEASES

Chemical accident prevention programs are a critical element in a firm's overall strategy for managing chemical releases. Equally important are strategies to deal with releases if and when they occur. This chapter focuses on selected industry practices to detect and mitigate anhydrous HF releases. It is important to note that a release of concentrated aqueous HF may also cause a vapor cloud. Some of the following detection and mitigation options may be appropriate for either type of HF release.

7.1 General Industry Practices to Detect HF Releases

Many HF facilities recognize the importance of detecting HF leaks quickly. Detection can indicate which system or equipment is malfunctioning, and thereby enable facility personnel to use adequate personal protective gear and alleviate the problem in a safe and timely manner. Some detectors can automatically trigger shutoff switches and water mitigation systems. Others can provide early warning to employees and community officials who can begin emergency response procedures, sound alarms, and begin protective measures, like evacuation, as needed. There are several methods and systems that can be used to detect HF releases, including visual observation and detection equipment and systems.

7.1.1 Visual Observation

HF forms a visible white cloud and, therefore, operating and maintenance personnel can spot small leaks around flanges, valves, and places that might lead to more serious releases. HF vapor clouds, however, are similar in appearance to steam clouds. Thus, visual detection of HF is more difficult in **a** plant area where there are steam clouds from leaks, condensate drains or condensate traps. Conversely, an HF cloud may be mistaken for steam, or the observer may not be able to differentiate it from background. Aqueous ammonia may be used as a detector around suspected leak areas to confirm or highlight the visible sign of a small HF release point. Many facilities use HF sensitive paints which change color when contacted by HF to identify leak sources. One manufacturer of HF sensitive paints, Valspar Corp., sells a paint which is sensitive to 5 percent concentrations of HF or greater. Some facilities have chosen not to use HF sensitive paints because HF is corrosive to paint in general; therefore, leakage becomes readily apparent with degradation of the paint surface.

Many facilities use closed circuit television systems so that operators in the control room can identify and determine the exact location of a release with remotely-operated visual monitoring. These systems are also valuable for directing and observing the effects of mitigation measures. Other types of camera systems can identify HF leakage based on the motion of the release. The drawback of a closed circuit television system is that without sharp contrast, HF vapor clouds can be mistaken for background. Also, the closed-circuit television screens in the control room may not be constantly monitored. New technologies rely on the use of more expensive infrared camera systems which produce a thermal image. These systems will be discussed further below.

7.1.2 Detector Equipment and Systems

Reliable and accurate HF detectors have been difficult to develop. The corrosive nature of HF causes detectors to deteriorate fairly rapidly, and materials that resist corrosion, used routinely in detector systems, are costly. Several types of detector systems, including multi-detector systems, fixed detector systems, mobile detectors, open path systems, and thermal imaging systems, have been and are currently being tested to demonstrate reliability. There are limitations to using detection

ED_002700_00005500-00118

methods, including the following: detector equipment and systems may not be reliable, purchasing and maintaining the high technology equipment may be expensive, the impact of a false positive may be costly and dangerous (e.g., water spray mitigation systems automatically turned on), other gases may interfere with the detector, and an HF cloud could 'evade' sensor locations if sensors are not properly placed.

Multi-Detector Systems

The types of HF specific detectors most commonly used in multi-detector systems are based on electrochemical cells. In these detectors, the chemical properties of HF change the parameters of the sensor, generating an electrical signal. Interference from other chemicals like hydrogen chloride and sulfur dioxide, however, can cause false positive responses. Electrochemical detectors produced by Sensidyne Inc. and Gas Tech have been installed at some HF facilities. These systems are also sensitive to temperature and humidity, and must be calibrated every one to three months. A newer technique for HF detection is the ion mobility spectrometer. In this device, an air sample is drawn into the test chamber and ionized. The HF ions are separated from other ions by an electric field, and the concentration is computed. A typical measurement range for this device is 0 to 10 ppm HF. These systems have low maintenance requirements; however, high **humidity** may result in false low readings. Ion mobility spectrometers supplied by either Sensidyne Inc. or Environmental Technologies Group Inc. have been installed at a few HF facilities.

A recent development by Exxon Corp., marketed by Environmental Technologies Group Inc., utilizes a silicon oxide chip as an HF detector. As HF passes over a thin film of silicon oxide, the surface is etched, increasing light reflection from the film surface. An optical device senses the reflected light and generates a current which can be used to activate an alarm. HF concentration is not calculated, but response to concentrations above 500 ppm occurs in seconds. The silicon sensor is disposable and can be used only once, but can be replaced for a nominal cost. It is designed to monitor HF leaks at flanges, pump seals, and similar sources.[1] One benefit of this system is that it is HF specific.

Fixed Detector/Multi-Sample Point Detectors

Fixed-detector/multi-sample point systems use a single detector or instrument. Samples from several process points are pumped to the instrument and introduced in rotation for analysis. This type of system is most often used when an expensive or complicated analytical method or instrument is needed. HF facilities that use this system may use a gas chromatograph with an electron capture detector, This instrument separates and measures specific gas **concentrations.**[2] An ion mobility spectrometer may also be used as an HF detector with a multiple sample point system[3]

Mobile Detectors

Indicator tubes, such as Draeger tubes, can provide quick spot checks for HF concentrations. In contrast to the gas chromatograph, indicator tubes may be less precise, but are simple to operate and can be moved easily for measurements at the process area or at the facility fenceline. In this method, HF pumped through a detector tube produces a stain; the length of the stain is proportional to the HF concentration. The tubes can be easily moved to detector locations and are used to confirm a release and its concentration.

Open Path Detectors

Open path or remote sensing systems can detect a chemical plume when it crosses the open path of a visible or infrared light beam. The absorption or scattering of the light by the chemical is measured by a detector. However, vapor clouds may also scatter light and cause a false positive.

ED_002700_00005500-00119

Research is still being conducted to develop reliable and accurate open path sensors such as laser detectors which can detect HF across large areas, especially at the fenceline. MDA Scientific is developing a Fourier Transform Infrared Spectrometer which can be used as an open path detector. This system is designed to detect 160 chemical compounds and provide concentration data. It has been successfully tested at an aluminum smelting facility and Mobil Oil is scheduled to test this sensor at its plant in Torrance, California.

For facilities that use real time emergency response computer systems, the sensors can be integrated to provide data to estimate impacts of an HF release. Regardless of the type of detector system, the detectors need to be inspected, tested, and maintained to ensure reliability of operation. In the case of power failure, the sensor systems are provided with backup electrical power or power supply which cannot be interrupted.[4] Drawbacks of open path sensors are that they are limited to monitoring perimeters, and presently cannot detect concentration levels.

Thermal Imaging

The thermal imaging monitoring technique detects the presence of a cloud cooler than ambient conditions. Based on tests conducted by Amoco, thermal imaging has been found to be very sensitive and can provide monitoring of an entire process unit. The results are displayed on a video monitor and software has been developed which will provide interpretation from the camera and can provide alarms to unit operators. While this monitoring technique is not HF specific, it was tested during the Goldfish experiments on atmospheric releases of HF and provided data on cloud position.[5] (The Goldfish experiments are discussed further in Section 7.3 of this chapter and in Chapter 9.)

7.2 HF Detectors Used by Specific Industries

The use of HF detectors is not standard practice in the HF industry. This is an emerging technology and many facilities are uncertain about the reliability and accuracy of detector systems and equipment. In fact, Du Pont is testing HF detectors at their HF production facility in La Porte, Texas, before the company installs the same detectors at their fluorocarbon production facility. In California, however, the South Coast Air Quality Management District (SCAQMD) has mandated the use of HF detectors at the five facilities that use anhydrous HF in the District. The detectors described below are provided as examples to illustrate efforts at specific facilities. Because these examples are based on a few facility site visits and on select facility documentation, it is not known the extent to which these types of detectors are used throughout the industry. Facilities that do not have any HF detection systems generally rely on visual observation by operators.

7.2.1 HF Manufacturing

To detect leaks, the Du Pont HF production facility in La Porte, Texas, has installed electrochemical detectors and TV monitors around the process area.[6]

7.2.2 Refinery Alkylate Production

Since ambient air levels of hydrocarbon would normally be associated with an acid leak in an alkylation unit, hydrocarbon detectors have been installed at alkylation unit sites for early detection of a release. This currently available technology consists of both wide area and fixed point detectors located throughout the alkylation unit site.

Several refineries use various types of detectors to identify HF releases. The American Petroleum Institute's (API) RP 751 recommends using leak detection systems deemed appropriate for the unit, including closed-circuit television, point sensors, open-path sensors, and other imaging

ED_002700_00005500-00120

systems.[7] For example, a Mobil refinery is evaluating an ion mobility detector as a point sensor to detect HF at a concentration of 10 to 20 ppm. The same facility is testing the use of silicon detectors to trigger deluge systems at HF concentrations of 200 to 400 ppm.[8] Amoco has installed throughout their alkylation units several types of detectors including open path infrared absorption detectors and thermal imaging cameras.[9]

7.3 General Industry Practices to Mitigate HF Releases

Mitigation measures are designed to reduce the quantity or concentration of HF released after a loss of containment, before the HF migrates off-site, reducing the potential for chemical exposure to workers and the general public. Effective mitigation measures are specific to the site, location conditions, process characteristics, and scale of operation. For example, a release of superheated liquid HF is likely to result in an aerosol vapor cloud and, therefore, diking would not be an effective mitigation technique. Alternatively, a release of low pressure subcooled HF liquid may form a liquid pool. Diking and vapor suppression may be useful; however, liquid HF vaporizes very rapidly."

Because HF can be released as a vapor or as a liquid, mitigation systems have been developed to address both atmospheric releases and liquid spills. The series of Goldfish tests in 1986 (see Chapter 9 for additional discussion) showed that for accidental releases of HF at alkylation unit temperature and pressure, and at the ambient conditions at the test facility, the HF flashed and generated a denser-than-air cloud. The cloud also had a high aerosol and cold HF vapor content with no liquid drop-out observed. In 1988, another series of HF tests called the Hawk HF Test Series (also discussed in Chapter 9) was devised to measure the effectiveness of water sprays. For atmospheric releases of HF gases or vapors, the tests indicated that water spray systems could be effective in reducing airborne HF. At water to HF ratios of 40 to 1, water sprays have been documented as reducing the concentration of HF in the air by up to 90 percent[11,12] The following is a summary of the mitigation systems used in the HF industry.

7.3.1 Water Spray Systems

Following the Goldfish Test series in 1986 which examined the source and dispersion characteristics of HF released under alkylation unit conditions, the test participants formed the Industry Cooperative HF Mitigation/Assessment Program (ICHMAP). This group of 20 companies in the chemical and petroleum industries then sponsored and conducted a water spray test program in 1988 called the Hawk Test series, Approximately 80 experiments were conducted in a flow chamber with the release source a horizontal jet of HF pointed at the mitigation device. These experiments considered variations in wind speed, humidity, acid type, and the mitigation device.[13]

These tests demonstrated that high HF removal rates could be achieved under controlled ideal conditions; however, the rate could also be reduced by non-optimal interaction between the cloud and the spray. Further, a high ratio of water to HF would not guarantee effectiveness of a water mitigation system, and the issue of scale-up from the experimental design to a plant-scale design system needed further work. To address these issues a computer program to model water spray removal was developed to assess overall effectiveness of a water spray given facility-specific configuration and conditions. This model called HFSPRAY was verified against the 1988 Hawk Test experiments and found to agree well with both field test data and wind tunnel data.[14]

A water spray system can be used to mitigate a major release of HF. An alternative to water, although rarely used, is a mild alkaline solution such as ammonia water or a sodium carbonate solution. A water spray system may include several types of water spray subsystems, A fire water subsystem consists of a stationary dense water stream that is used primarily for fighting fires and could also be used to knock down HF vapors. Other remotely operated or portable water monitors are primarily used to knock down HF vapors. In contrast to the water monitors, a water deluge

ED_002700_00005500-00121

subsystem provides a narrow water umbrella that is directed towards specific equipment such as pumps and flanges to knock down an HF leak before it becomes a vapor cloud.

To be effective, HF facilities use sensors or other methods to identify an HF leak, and then quickly apply water in sufficient quantities. To prevent overflow of the facility effluent system, HF facilities are beginning to design containment systems that collect the contaminated water and drain quickly. A subsequent system is needed to neutralize the acid-contaminated water from expected pH levels between 1 and 2 to pH levels between 7 and 11. For effective, safe remote operation, the HF mitigation equipment may have a dedicated control panel in the control room. The American Petroleum Institute's RP 751 also recommends that any water mitigation system be fully testable, with operating procedures specifying test procedures and frequencies. The SCAQMD requires an automated water spray system, or an SCAQMD-approved alternative at facilities that use anhydrous HF in southern California."

Several facilities are concerned that the mitigation systems pose unworkable design requirements, do not add significantly to the protection of the public, and that the systems have the potential to cause more harm than good. Water spray mitigation systems do pose many design challenges. Facilities need to obtain sufficient water resources and to install large water supply tanks near the existing HF units. Many facilities have problems obtaining the amount of water required. The water spray nozzles have to be designed to provide adequate coverage and droplet size to knock down the leaking HF vapors effectively. Also, the high water flows suggested by the Hawk tests or required by regulation could damage process equipment further, or even injure workers in the unit. If, however, the water spray rates are reduced to prevent further equipment damage or delayed to allow workers to exit the area, the effectiveness of the mitigation technique could be diminished. If a leak rate exceeds the design specifications, the effectiveness of a water mitigation system may be reduced significantly.[18] Finally, to accommodate water spray systems, facilities must be able to direct and collect the acid-contaminated water quickly. The collected wastewater would need to be neutralized and disposed of according to applicable regulatory requirements. Because of the high costs and design complexities associated with development and implementation of water spray systems, many facilities may not choose this mitigation approach.

7.3.2 Scrubbers

Scrubber systems can be used to absorb HF gas or vapors vented from process streams. Scrubbers are commonly used in HF facilities to absorb HF vapors released from vents, pressure relief valves, transfer lines, rupture discs, and other devices. Because HF reacts readily with water, a water spray effectively removes the HF gas or vapor from an effluent gas stream, and the HF-contaminated water can then be treated. In some cases, e.g., alkylation units, an alkaline solution is used to obtain additional HF absorption and to neutralize the HF. Types of scrubbers that have been used include spray towers, packed bed scrubbers, **trayed** towers and venturis.

The Chemical Manufacturers Association (CMA) HF committee recommends that all anhydrous HF storage tanks be equipped with some type of vent gas scrubbing equipment. Scrubbers are also required by the SCAQMD at facilities using anhydrous HF in the District.[19] During tank filling operations, fumes will be displaced from the storage tank to the atmosphere unless they are absorbed by water or alkaline **scrubbers.**[20] Scrubbers designed for emergency releases may be on-line continuously or activated by leak detectors, pressure or temperature sensors, or remote manual response.[21] The API notes that in most units, scrubbers are designed to stay on stream at all times, and therefore do not need to be activated by leak detectors.[22]

7.3.3 Emergency De-inventory

Emergency de-inventory or rapid acid transfer systems may mitigate an HF release by removing the volume of HF from the failed equipment to safe equipment. For some facilities, including petroleum refineries, the rapid transfer would require removing HF in a stream with other chemicals. Factors to consider in a rapid acid transfer system include de-inventory time, the extent of acid movement, the force required to move the acid (e.g., pump), the vessels to include in the de-inventory system, the receiving vessels, the venting of HF vapors generated during the acid movement, and pressure relief.[23] Some facilities are developing plans to empty a leaking storage tank rapidly. Concern has been voiced that the amount of time required for rapid acid transfer of large HF vessels would be longer than that required for all the HF to leak out in a catastrophic release.[24] The addition of equipment such as large pumps, lines, and valves involved in rapid de-inventory systems may actually increase risk by providing additional locations for loss of containment.[25] In addition to possible long de-inventory times, the transfer operation itself has inherent release hazards.[26]

7.3.4 Secondary Containment

Secondary containment is an industry practice used to contain releases of many hazardous chemicals. HF has a boiling point of 19.7°C (67.4°F), which is at or below temperatures commonly found under ambient conditions. Because HF will volatilize rapidly above this temperature, secondary containment of HF has limited applicability in climates or processes which may have higher temperatures.

Even though a liquid pool of HF will volatilize rapidly, containment of liquid releases of HF can minimize both ground contamination and vapor cloud size. Examples of containment systems include dikes, impounding basins, and enclosures around one or several tanks with a capacity to contain the largest tank. The most common containment type for HF use is a low wall dike having a minimum capacity of at least 110 percent of the capacity of the largest storage tank on the site or in a tank farm.[27] Drainage systems underlying a storage vessel is another type of containment system which can provide a direct feed from the vessel to a neutralization basin.

For many volatile hazardous chemicals, impermeable flotation devices and foam applied to a pool can further reduce vapor emissions; however, commercially viable flotation devices and foams are not available for HF.

Enclosures are containment structures which surround storage and process equipment to capture HF if spilled or vented. The spilled liquid contained in the enclosure is then treated and the gaseous HF is neutralized by scrubbers. The use of specially designed enclosures for HF storage or process equipment does not appear to be widely practiced. For processes that use HF and flammable chemicals (e.g., HF alkylation), the potential for explosion in the enclosure may increase the risk of a large release of HF.[28]

7.3.5 Remotely-Operated Emergency Isolation Valves

The magnitude of an HF release can be reduced by using valves that can quickly isolate major HF inventories from the source of the leak or spill. An increasing number of facilities have installed remotely operable emergency block valves. Remote shutoff allows workers to shut down a system or piece of equipment from another location. Remote shutoff eliminates the need for access to equipment. Also, operators in the control room may be able to spot a release or upset condition before the field personnel and shut the unit down more quickly using the remote shutoff. Shut-off systems can also position valves to direct process HF to a storage drum, and isolate vessels within minutes.[29] For example, before a field operator can identify a leak from a pump, personnel in the

ED_002700_00005500-00123

control room may see the leak with TV cameras or detectors and be able to shut down the pump automatically. These remote-controlled valves are also used on either side of an unloading hose, critical pipe, or HF vessel to isolate the equipment in the event a leak **develops.**[30] Particularly in the unloading/loading area, the two HF producers, fluorocarbon manufacturers, many refineries, and other industry segments are installing remote shutoff valves on either side of the flexible transfer hoses to limit the amount of HF released if a hose failure occurs.

7.3.6 Automatic Valves

Some systems that handle HF are being equipped with automatic shutoff switches to deactivate malfunctioning equipment and/or valves to isolate a leak area more quickly. If there is a process upset or a release occurs, a monitor or detector can be programmed to shut off the equipment automatically. For example, if overfilling occurs, the level indicator may trigger the automatic valves on a loading hose to close. Automatic shutoff valves may be placed in the field, in the control room, or other convenient locations. To accompany the automatic shutoff controls, proper procedures need to specify the conditions for the automatic shutoff of any equipment. Manual shutoff systems usually back up automatic shutoff systems.

7.3.7. Relief Valves

Relief valves located on HF storage and process equipment are designed to release HF to relieve excess pressure that could eventually lead to a vessel rupture. These relief valves are common in most facilities and are mandated to be installed on vessels to various codes and standards. Most facilities vent relief valves to scrubbers or other devices to absorb any HF released.

7.3.8 Capping Kits

To stop HF leaks in valves on tank cars or tank trucks, both HF producers have developed emergency capping kits for use on most vehicles. The producers and shippers of HF have adapted the chlorine capping kit for use on HF assemblies. Regardless of the design, the emergency capping kit is placed over the leaking/defective valves on the top of the tank car or truck. Du Pont also *uses* a European design for valves on tank trucks to prevent an HF release if the valves are sheared off the top[31]

7.4 HF Mitigation Systems Used by Specific Industries

Most of the HF facilities that were visited or supplied written information use some form of mitigation system. The mitigation systems described below are provided as examples to illustrate efforts at specific facilities. Because these examples are based on a few facility site visits and on select facility documentation, the extent to which these mitigation systems are used throughout the industry is not known.

7.4.1 HF Manufacture

Du Pont requires that its facilities have the capability to empty both process and storage equipment on short notice in the event of an emergency. The La Porte facility is installing tank car motion detectors; an HF transfer is shut down if a tank car moves during transfer operations. Du Pont conducts inventory drills at least once per **year.**[32]

At Du Pont, diked areas are designed to divert a spill for treatment rather than to contain it. Asphalt is used rather than concrete under storage vessels because HF reacts with concrete. The company also requires that water dilution facilities be adequate to dilute the largest credible HF leak to below 20 percent HF concentration, to minimize the amount of HF that is vaporized.[33]

To further reduce the hazards associated with large quantities of HF, Allied-Signal has reduced their typical HF inventories from 2,000 tons to 1,200 tons.

7.4.2 Fluorocarbon Manufacturing

Because of the large HF storage vessels typically in use at fluorocarbon manufacturers, de-inventory may not be a viable afternative. For example, at a Du Pont fluorocarbon manufacturing facility in Corpus Christi, Texas, it would take over 13 hours to assemble the number of rail cars required to empty a large 250,000 gallon storage vessel. Instead, the facility emphasizes comprehensive vessel inspection, preventive maintenance and repair of the vessel. They maintain a quick weld program to affix metal plates to cracks or holes in the vessel, but have never had to use it in an emergency situation.

7.4.3 Refinery Alkylate Production

One recommendation to API's Committee on HF Alkylation was to enhance mitigation systems to lower the risk to the community and the environment. In their position paper "The Use of Hydrofluoric Acid in the Petroleum Refining Alkylation Process," API developed safety guidelines containing options to mitigate the impact of a release. These included:

- providing a monitoring system for early detection of an HF release;
- implementing a system for applying large quantities of water to acid releases:
- removing or segregating acid inventory rapidly from the process to minimize the amount of acid released;
- using a system of remotely operated isolation valves in acid-containing parts of the process to limit the potential HF release in case of a leak; and
- following operating procedures and design of facilities to minimize the inventory of HF and to minimize the number of points in the process where HF might be released.

These guidelines also discuss the need to train and work with emergency response personnel and the community to determine the proper response to an HF release. All of these mitigation steps depend on management's overall commitment to ensure that procedures, training, and audits are implemented.

Several refineries, including Ultramar, Mobil, Phillips, Chevron, and Amoco, have or are planning to develop and install water spray mitigation systems. For example, after extensive research, Amoco is installing a massive water spray system surrounding their HF alkylation unit in Texas City, Texas. The system is able to deliver 33,000 gallons per minute from a water curtain and a total of up to 40,000 gallons per minute from both the water curtain and fire monitors.[34]

The Chevron refinery in Salt Lake City is installing a deluge system consisting of five elevated water towers that can deliver a total of approximately 12,900 gallons per minute. The monitors, which are 50 feet high, can be adjusted to deliver a spray, or a direct stream for greater distance. Monitors are controlled by joysticks in the control room. A large lined sump will collect the water, where it will be neutralized before being treated in the wastewater treatment system.[35]

ED_002700_00005500-00125

For fully installed systems, data are not available on water spray effectiveness on an actual HF release; however, several refineries, including Ultramar, have tested the systems in simulation exercises. In addition, HFSPRAY, a verified mathematical model, has been developed to quantify effectiveness of water sprays at specific installations, given specific release scenarios and weather conditions.[36]

7.4.4 Linear Alkylbenzene Production

Vista Chemical has installed monitors for leak detection, an emergency relief scrubber system, a portable potassium hydroxide vacuum system, and emergency shutdown and isolation systems to mitigate leaks and spills. Additionally, they have put in place a water spray system, an emergency pump-out system, and a closed circuit TV-monitoring system for the HF unit.

ED_002700_00005500-00126

ENDNOTES

1. Seringer, Carolyn S., Du Pont Chemicals, comments from technical review of *Hydrogen Fluoride Study, Report to Congress,* Draft May 8, 1992, June 5, 1992. (436.4- Jim Small)

2. U.S. Environmental Protection Agency, Review *of Emergency Systems, Report to Congress, Section 305(b) Title III Superfund Amendments and Reauthorization Act of 1986,* Office of Solid Waste and Emergency Response, Washington, D.C., May 1988. (489.92)

3. Seringer, Carolyn S., Du Pont Chemicals.

4. Du Pont Chemicals, *Draft AHF Safely Guardian Manual,* Wilmington, DE, December 18, 1991. (137.8)

5. Morris, Jeff, American Petroleum Institute, Fina Oil and Chemical Company, comments from technical review of *Hydrogen Fluoride Study, Report to Congress,* Draft May 8, 1992, June 1, 1992. (344)

6. Facility visit by U.S. Environmental Protection Agency to Du Pont, La Porte, TX, December 12, 1991. (620)

7. *API Recommended Practice* 757, First Edition, 'Safe Operation of Hydrofluoric Acid Alkylation Units,' American Petroleum Institute, Washington, D.C., June 1992. (10.6)

8. Presentation by Mobil Oil to U.S. Environmental Protection Agency, January 28, 1992. (610)

9. Presentation by Amoco to U.S. Environmental Protection Agency, February 6, 1992. (640)

10. *API Recommended Practice 75 1.*

11. *HF Mitigation Water Spray Project,* created for a meeting of the API and given to the U.S. EPA, December 10, 1991. (424.34ABC)

12. Presentation by Mobil Oil.

13. Blewitt, Doug, *N., Design of Water Spray Mitigation Systems for Amoco HF Alkylation Units. (56)*

14. Blewitt, Doug, N.

15. Mobil Oil Corporation Torrance Refinery, *Hydrofluoric Acid Alkylation Unit Risk Management and Prevention Program Report,* Torrance, CA, March 16, 1989. (185)

16. *API Recommended Practice 75 1.*

17. Hofman, Hazel, Shahid Khan, Chris Marlia, and David Yeh, *Guideline to Comply with Proposed Rule 1470: Hydrogen Fluoride Storage and* Use, South Coast Air Quality Management District, CA, June 14, 1991. (160)

18. Seringer, Carolyn S., Du Pont Chemicals.

19. Hofman, Hazel.

20. Allied-Signal, Inc., *Anhydrous Hydrofluoric Acid,* The HF Products Group, Morristown, NJ. (17)

21. Du Pont Chemicals, *Draft AHF Safety Guardian Manual.*

22. Morris, Jeff, American Petroleum Institute, Fina Oil and Chemical Company, comments from technical review of *Hydrogen Fluoride Study, Report to Congress,* Draft May 8, 1992, June 1, 1992. (344)

23. *API Recommended Practice 751.*

24. *API Recommended Practice 751.*

25. Seringer, Carolyn S., Du Pont Chemicals.

26. Hofman, Hazel.

27. Allied-Signal, Inc., *Anhydrous Hydrofluoric Acid.*

28. Whittle, David K., Donald K. Lorenzo, John Q. Kirkman, "Results of Alkylation Unit Hazard, Operability Study Are Analyzed and Summarized,' *Oil and Gas Journal,* July 10, 1989, p 96. (365)

29. Personal Communication, Conversation with Mike Brown and Bill Davis, Salt Lake City Chevron Refinery, Salt Lake City Utah, April 14, 1992. (76.7)

30. *API Recommended Practice 75 1.*

31. Facility visit by US. Environmental Protection Agency to Du Pont.

32. Du Pont Chemicals, *Draft AHF Safety Guardian Manual.*

33. Du Pont Chemicals, *Draft AHF Safety Guardian Manual.*

34. Wade, Robert *C., HF Mitigation Strategies at Amoco's Texas City Alkylation Unit,* Amoco Oil Company, Chicago, IL. (499.5)

35. Personal Communication, Conversation with Mike Brown and Bill Davis.

36. Fthenakis, Vasilis M., Brookhaven National Laboratory, comments from technical review of *Hydrogen Fluoride Study, Report to Congress,* Draft May 8, 1992, June 8, 1992. (139.69)

This page intentionally left blank.

ED_002700_00005500-00129

8. CHARACTERIZATION OF HYDROGEN FLUORIDE ACCIDENTS

Despite practices to prevent, detect, and mitigate releases of HF, as discussed in Chapters 6 and 7, there have been a number of accidental releases of HF. This chapter reviews such accidents, A compilation and characterization of accidents associated with HF can serve several useful purposes:

- an understanding of how and why an incident occurred can help determine how HF chemical and process hazards contribute to accidental releases;
- a review of the events that contribute to an incident may also provide useful insight into how accidental releases can be prevented; and
- an evaluation of probable root causes may also help to determine if certain types of incidents are more likely in certain HF industry segments.

This chapter first includes a discussion of a few of the more notable incidents involving HF that have occurred in the U.S. Following this is an analysis of the accident data available for HF. To the extent possible, EPA has tried to distinguish between incidents involving aqueous and anhydrous HF.

8.1 Examples of Major Accidents

8.1.1 Marathon Petroleum

Attention has recently been focused on HF mainly because of a large accidental release of HF that occurred on October 30, 1987, at the Marathon Petroleum Company refinery in Texas City, Texas, This incident occurred when a 50-foot, multi-ton heater convection unit was accidentally dropped onto the top of an HF storage vessel. The unit was being moved for repair and maintenance during a general plant turnaround. The dropped convection unit severed a 4-inch acid loading line and a 2-inch pressure relief line causing the HF to be released.[1] An estimated 30,000 to 53,000 pounds of HF vapors were released.[2,3]

Although most of the HF was released during the first few minutes in the form of an aerosol as the storage vessel depressurized, vapors continued to discharge at a much lower rate from the vessel for the next 44 hours and migrated northwest through an adjacent residential area. Eighty-five square blocks and approximately 4,000 residents were evacuated; 1,037 residents reported to three neighboring hospitals. Injuries included skin burns and irritation to the eyes, nose, throat, and lungs. Vegetation also was damaged in the path of the vapor cloud. No fatalities occurred.[4,5]

The accident and the cause of the discharge were investigated by OSHA; Notices of Violation (NOVs) were subsequently sent to Marathon and two of its contractors. The specific problems cited included: not instituting accepted engineering control measures to prevent the release (i.e., emptying HF vessel before hoisting a heavy load over it; not hoisting a heavy load over an HF tank); the crane was not properly blocked (wooden blocks supporting crane outriggers were crushed); crane inspection documentation was not prepared; and the crane safety devices were not inspected prior to use and a malfunction occurred.[6]

ED_002700_00005500-00130

8.1.2 Mobil Oil

A 165-pound release of HF occurred in 1987 at Mobil Oil's refinery in Torrance, California. The release occurred following an undetected excess flow of HF to the alkylation unit's propane treater. The propane treater uses potassium hydroxide (KOH) to neutralize trace amounts of HF in liquid propane, an alkylation byproduct. An excess of HF was charged to the treater, and was not detected because a series of controllers and alarms was inoperable. The probable cause of the accident, determined by examining the damaged equipment, was that the presence of excess HF resulted in an exothermic reaction and created abnormal pressure, causing the KOH treater to fail. The upstream cooler may have failed as well for the same reason. When the treater failed, it released HF and propane, which exploded and started a large fire.[6]

While the two events discussed above, along with spill tests by industry, are often cited as the stimuli for focussing attention on HF, consideration of other incidents involving HF can provide a more balanced and complete picture.

8.1.3 Sequoyah Fuels Corporation (Subsidiary of Kerr-McGee)

On January 4, 1986, a cylinder containing uranium hexafluoride (UF_6) ruptured at the Sequoyah Fuels Facility in Gore, Oklahoma. Once released, the UF_6 hydrolyzed to particulate uranyl fluoride (UO_2F_2) and HF. The reaction produced a white plume that dispersed from the accident site with the prevailing winds. Most of the solid reaction products were deposited on-site. In this incident, the UF_6 cylinder was overfilled because of improper positioning on a scale designed to gauge the capacity of the container; one wheel of the dolly holding the cylinder was on the solid floor and not on the scale. As UF_6 is normally a solid at room temperature and pressure, cylinders must be heated to liquefy the chemical before it can be removed. Although official company policy prohibited the heating of overfilled tanks to remove excess chemical, the day shift supervisor instructed an operator to place the cylinder in a steam chest for six hours to liquefy the UF_6. About two hours later, the cylinder ruptured releasing 29,500 pounds of UF_6 and generating a large cloud of HF and uranyl fluoride. Subsequent investigation by the Nuclear Regulatory Commission Interagency Public Health Assessment Task Force revealed that the cylinder failed because of excess hydraulic pressure and approximately 3,350 pounds of HF was released as a result of the reaction of UF_6 in the atmosphere. One worker died, about 35 people were injured, and more than 100 workers and residents were screened at local hospitals as a result of the accident.[7,8] Favorable wind and weather conditions dispersed the cloud. Many employees at the site reported to evacuation points. The public was notified by radio and several residences in the area were evacuated.

8.1.4 Great Lakes Chemical Corporation

Another release of HF occurred on June 27, 1989, from the Great Lakes Chemical Corporation in El Dorado, Arkansas. The company uses HF to produce brominated fire retardant chemicals. Several bolts on a diaphragm isolator between a pressure gauge and a valve on an HF storage tank failed due to corrosion, and tank pressure forced the two halves of the isolator apart, releasing 1,320 pounds of HF. Although there were no injuries, evacuations, or other consequences associated with this release, it is illustrative of an equipment failure situation in which HF vapor was released[9]

8.2 Analysis of HF Accident Databases

Several databases were examined to identify accidents involving HF:

- EPA's Accidental Release Information Program (ARIP) database;
- EPA's Acute Hazardous Events (AHE) database;

ED_002700_00005500-00131

- Emergency Response Notification System (ERNS) database;
- DOT's Hazardous Materials Information System (HMIS);

Newspaper accounts and facility accident reports were also collected. A detailed description of each database listed above is provided in Appendix XII. Specific accident data from **ARIP**, **AHE**, ERNS, and **HMIS** are provided in Appendix XIII, Exhibits 1 to 4, respectively. Information taken from newspaper accounts and facility accident reports can be found in Appendix XIII, **Exhibit** 5. Exhibits 1 to 5 in Appendix XIV contain information solely on the accidents that resulted in death, injury, or evacuation from each of these databases and other sources. The data sources for Appendices XIII and XIV provide varying levels of information about each incident; therefore, not all entries are complete. Because of the variety of information provided in the databases, each database will be analyzed and discussed separately below.

8.2.1 ARIP Data

The **ARIP** database provides accurate and facility-verified information on the causes and prevention of accidental releases. However, because the database is designed to incorporate only the most severe accidents, it does not represent a nationwide statistical sample of all accidents that have occurred. The following analysis should be viewed with this in mind. See Appendix XII for more details on the **ARIP** database.

Of the approximately 2,700 events reported in **ARIP**, 33 (about one percent) involved HF. Exhibit 8-I shows the total number of **ARIP** and HF events recorded annually for 1986 through 1991.

EXHIBIT 8-1
HF Events In the ARIP Database

Year	Total Number of ARIP Events	Number of HF Events	HF Events as a Percentage of the Total
1986	33	2	6
1987	173	4	2
1988	390	3	1
1989	1,140	12	1
1990	894	11	1
1991	24	1	4
Total of All Years	2,654	33	1.2

The **ARIP** data were analyzed to determine the number of release events for each HF industry segment. The Chemicals segment had the largest number of releases **(10)**, followed by Petroleum Refining **(7)**, Metal Production **(6)**, Aircraft/Aerospace **(4)**, Television/Semiconductors **(3)**, Metal Fabrication **(2)**, and Transportation (1). The total quantity released in the Chemicals segment was

ED_002700_00005500-00132

about 9,500 pounds. The Petroleum Refining segment had releases totaling approximately 58,000 pounds, all but 4,500 pounds of which were from the Marathon accident. The Metal Production segment released about 23,000 pounds of HF, nearly all of which was in aqueous form.

ARIP data show that anhydrous HF was released in 13 events; the remaining 20 events involved aqueous HF. Generally, releases to air were reported for both releases of anhydrous HF and releases of aqueous HF in concentrations 70 percent and above. The releases of aqueous HF in concentrations less than 70 percent were reported primarily as releases to land.

ARIP data can also be used to characterize the duration and rates of release events. The overall durations of HF events reported in **ARIP** ranged from 5 minutes to 78 hours, Release rates (averaged over the duration of the release) ranged from less than 1 pound per minute up to 320 pounds per minute. Overall, most HF events reported in the **ARIP** database are of relatively short duration and small quantity.

ARIP data provide information on the point in the process where a release occurred, how the release was discovered, and the cause of the release. Exhibit 8-2 shows the distribution of locations in a facility where releases occurred. Leaks associated with piping (process and storage vessel piping, joints, and instruments) account for 10 of the 33 releases, while vessel leaks account for much of the remainder.

Exhibit 8-3 illustrates the primary and secondary causes of these releases. Equipment failure was given as the primary cause in 55 percent of the 33 incidents and as the secondary cause in 9 percent. Corrosion and inadequate maintenance and inspection are likely to be root causes of these incidents. Human error was also listed frequently (27 percent) as the primary cause of release. Overall, there were few secondary causes identified.

Early discovery is an important part of mitigating the adverse consequences of an accident. As shown in Exhibit 8-4, 55 percent of the HF releases identified in **ARIP** were discovered through operator observation. Gauges and other devices, such as monitors, were responsible for detecting 15 percent of the releases.

More than half of the HF releases reported in **ARIP** involved spills of aqueous HF. Releases of HF vapor occurred almost as often, Releases of concentrated aqueous HF can produce vapor clouds, but not to the same extent as anhydrous HF. Aqueous HF releases caused more environmental damage; releases of pickle liquors, **etchant** solutions, and other HF mixtures have caused fish kills and soil contaminations. According to **ARIP** data, releases of anhydrous HF are more likely to pose exposure hazards off-site than releases of aqueous HF. Releases of aqueous HF, on the other hand, pose greater environmental damage hazards.

ED_002700_00005500-00133

EXHIBIT 8-2
Release Point From **ARIP** Data

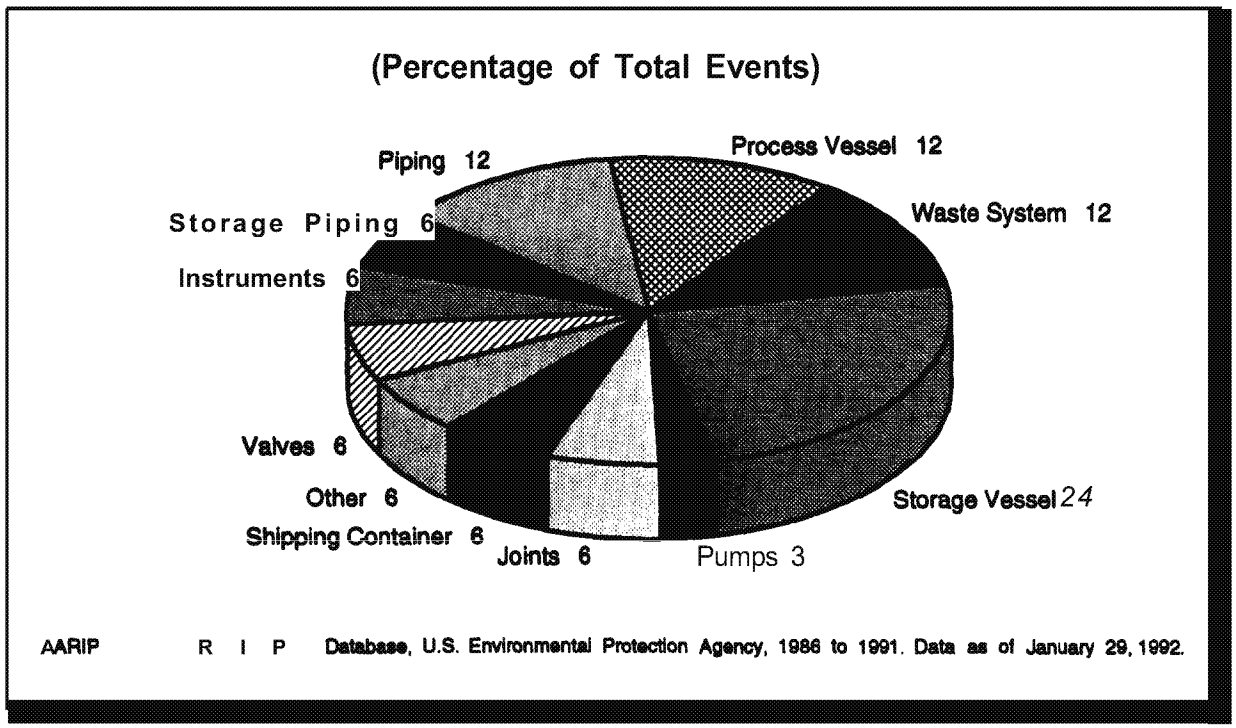

EXHIBIT 8-3
Release Cause From **ARIP** Data

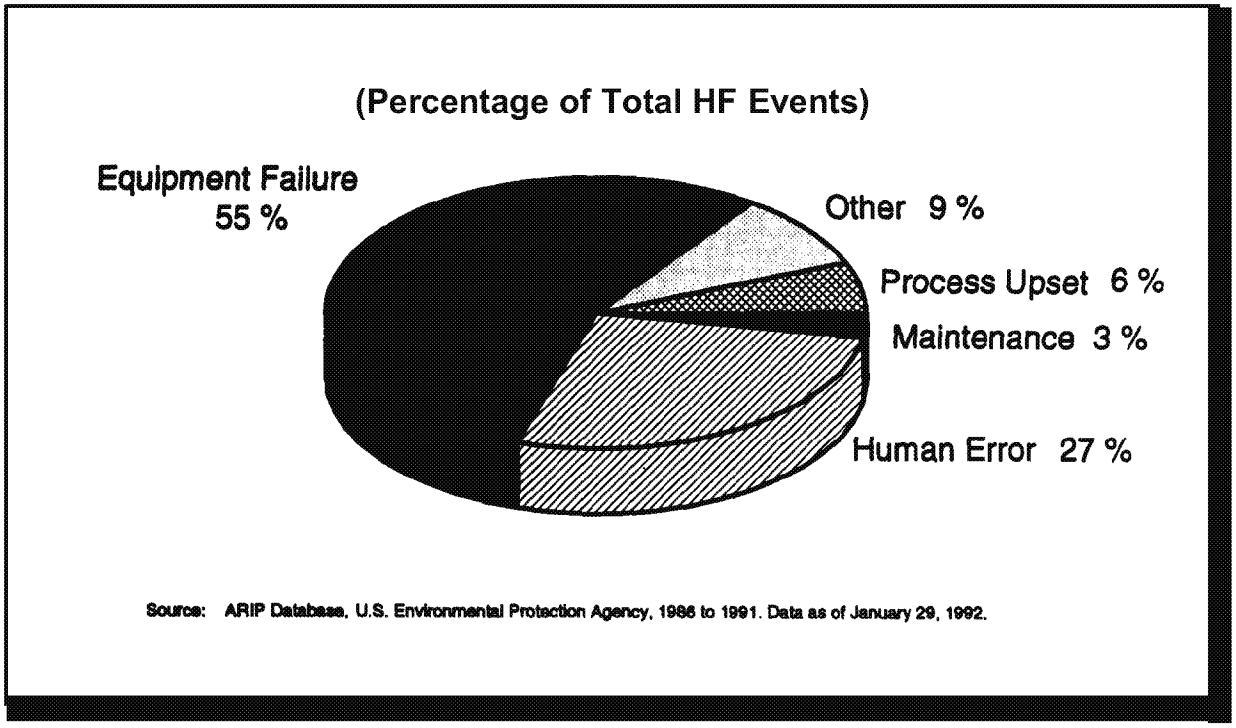

ED_002700_00005500-00134

EXHIBIT 8-4
How Was The Release Discovered?

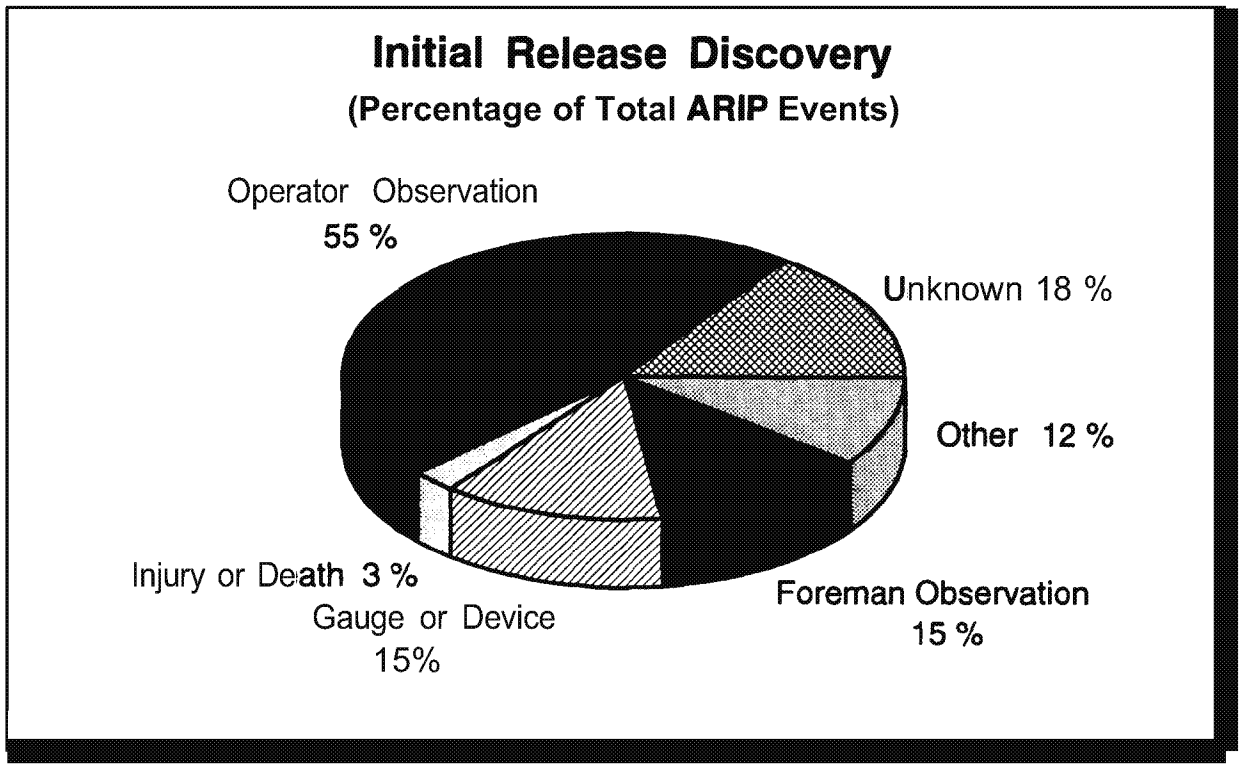

Injuries and evacuations, as reported in the **ARIP** database, are relatively infrequent in incidents involving HF. Excluding the Marathon event, **ARIP** data report only six employees injured, no members of the public injured, and no evacuations.

The **ARIP** database does not report any fatalities from HF incidents; however, the version of **ARIP** used in this study does not include a recent incident at Southwestern Refining in Corpus **Christi**, Texas, where two employees were killed in an HF incident that resulted from maintenance activities conducted in violation of standard procedures. Pump mechanics at the facility had removed all but three bolts that held the HF acid circulation pump casing together, in preparation for maintenance. Upon removal of the next bolt, the remaining two bolts failed and the pump casing housing blew off, releasing HF. The mechanics did not know that a discharge valve leaked, allowing system pressure to build in the pump casing. One employee was killed from injuries caused by the impact of the pump casing and the other from exposure to HF. Six other employees were injured in this incident.

Another observation that can be made from the **ARIP** database concerns the use of formal hazard evaluation methods. As noted in Chapter 6, a formal hazard evaluation (process hazard review) is critical to chemical accident prevention and the development of a good process safety management program as required in the recently promulgated OSHA process safety management standard. **ARIP** data show that 23 of the 33 facilities in this data set have not performed a formal hazard evaluation. The remaining ten have performed one or more formal hazard evaluation procedures.

In 17 events in the **ARIP** database, HF is cited as the secondary chemical released. These events primarily involve HF solutions. About seven of the events occurred at chemical facilities, and another five occurred at aerospace facilities. Releases of HF as a secondary chemical also occur primarily from piping and storage.

ED_002700_00005500-00135

8.2.2 AHE Data

The AHE database contains information on approximately 6,000 events, including 27 incidents involving HF. These data cover HF releases that occurred between 1980 and 1987. Refer to Appendix XII for details on the AHE database. Fourteen of the HF incidents occurred at fixed facilities and the remainder occurred during transportation. Of the 17 transportation incidents, five involved releases from tank cars, three from tank trucks, six from drums, and three were unknown (Exhibit 8-5). Six injuries associated with the HF events were reported, three in fixed-facility incidents and three during transportation incidents. Two fatalities were reported. Evacuation was performed in five events, two of which were associated with a fixed facility and three with transportation incidents.

EXHIBIT 8-5
Source of Transportation Leaks

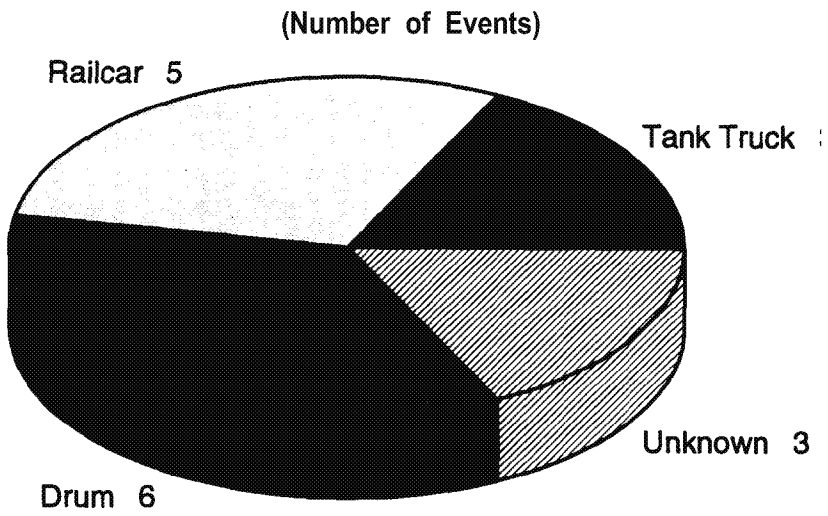

Source: AHE Database, U.S. Environmental Protection Agency, 1960-1987.
Data as of June 5, 1991.

8.2.3 ERNS Data

The ERNS database contains records of incidents from 1986 to the present. Refer to Appendix XII for details on the ERNS database. During the period up to November 10, 1991, 97 HF events were reported, representing less than 0.1 percent of the approximately 150,000 incidents recorded in the database. Most of the HF events (70 percent) occurred at fixed facilities. The distribution of releases from shipping containers reported in ERNS includes nine from drums, eight from tank trucks, and one each from tank cars, jugs, and ship containers. The quantity released reported in ERNS ranged from 1 to 82,000 pounds. No fatalities were reported in the database; however, there were eight events involving injuries and six events reporting evacuations. Fifty-one percent of the HF events were associated with aqueous HF releases, and 49 percent with anhydrous HF releases.[11]

ED_002700_00005500-00136

8.2.4 HMIS Data

During the period from January 1, 1980 to December 31, 1990, 19 HF incidents were reported to the U.S. Department of Transportation's (DOT) **HMIS**. Refer to Appendix XII for details on the **HMIS** database. As shown in Exhibit 8-6, eight incidents occurred due to dropped or failed packaging (i.e., cylinders, plastic drums and bottles, metal drums), and eight incidents resulted from valve failure on a tank car or other package. The remainder of the incidents occurred due to derailment, tank car piping failure, or a weld failure on a tank car.

EXHIBIT 8-6
Failure Types From HMIS Data

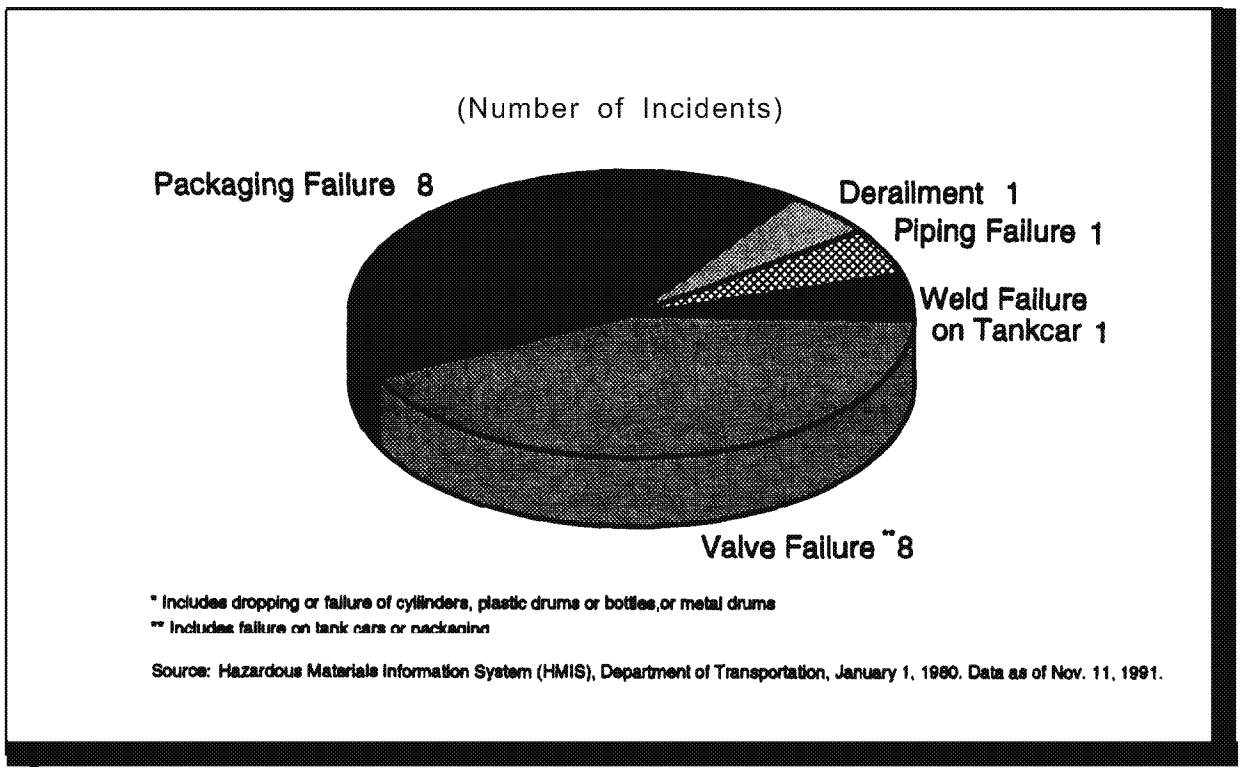

8.3 Overview of HF Accident Data

For analyses of release cause, facility type, consequences, and transportation releases, the release information from all data sources were combined. The total number of incidents described in Appendix XIII is 155, corrected for duplicate reports. All releases are identified as either anhydrous or aqueous, Because the hazards to facility employees and the public are different for anhydrous and aqueous HF, releases of anhydrous and aqueous HF are analyzed separately when considering on and off-site consequences (e.g, deaths, injuries, evacuations). The release data are similarly separated in examining transportation releases.

8.3.1 Release Cause

The 155 HF releases reported in the data sources discussed above appear to be caused primarily by equipment failure and human error, or a combination of both. These causes are often interrelated; for example, equipment failure (e.g., malfunctioning valve) may be due to or exacerbated by human error (e.g., inadequate maintenance). Consequently, the primary or root cause of a release

ED_002700_00005500-00137

is not always accurately identified by the facility in release reporting. Analysis of accident data, however, does provide useful insight into some of the events leading to releases.

HF releases were most often attributed to the failure of process and transportation equipment, including valves, piping, pumps, unloading hoses, and storage vessels, with failed valves the most frequent cause. Also, failure of packaging was identified in a large portion of the incidents. Corrosion is probably the major hazard leading to equipment and packaging failures. For example, in a release at Great Lakes Chemical in Arkansas, corrosion from HF caused failure of the pressure gauge on a storage vessel which led to the release of 1,320 pounds of HF.[12]

Human error, such as failure to follow standard operating procedures, was also frequently cited as the cause for HF releases. Human errors can include such things as opening flanges on a process line before ensuring that the line is cleared, mistakenly opening a valve on a line under pressure, dropping cylinders or bottles of HF, and leaving containers open during transport. Failure to follow standard operating procedures or accepted engineering control measures was cited in two of the largest accidents involving HF (i.e., Marathon Petroleum and Kerr-McGee).

In another large release attributed to human error, employees at Consolidated Rail Corporation misjudged the severity of the situation and did not respond to a leaking tank car. A weld eventually failed on the pressurized vessel, resulting in a vapor cloud containing 6,400 pounds of HF that traveled 2.5 miles.[13] Another release attributable to human error occurred when a drum was punctured by a fork lift at the Inland Container Corporation in Missouri, resulting in a release of 413 pounds of liquid HF.[14]

EPA recognizes that errors in equipment design, standard operating procedures or by management can lead to operator or maintenance errors that cause accidental releases. Information on such errors and their significance in HF incidents are not available.

8.3.2 Types of Facilities

Accidental releases of HF have occurred in every HF industry segment. The hazards posed by these releases depend on the type of facility and the amount and concentration of HF released. The HF release data in Appendix XIII show the number of accidents associated with various industry segments or processes, as indicated in Exhibit 8-7. The designations of facility type for this exhibit are, in some instances, different than those made in the specific databases, especially for transportation-related incidents. Transportation incidents include those during loading and unloading as well as those during transit. Also, there may be some overlap between the chemical manufacturing and fluorocarbon manufacturing categories.

The 55 transportation incidents (approximately 35 percent of the total) include loading and unloading, equipment failure incidents during transportation, and package failures during transport to or from a facility. Most facilities recognize that unloading/loading is a vulnerable operation because of the number of "handlings," or transfers of material involved (i.e., from storage to transport vessel, and from transport container to storage.). Several refineries with HF alkylation units have examined at least one transportation-related incident (e.g., failure of unloading hose) in their hazard evaluations.

The release hazards associated with tank car shipments of anhydrous HF are related primarily to the likelihood of derailment and subsequent loss of tank car integrity. A leak can occur during shipment due to normal operational mechanical stresses, which can lead to loosened fittings, gasket leaks or, leaking valves.[15] The rate of derailments has been declining since 1978. For example, the frequency of derailments in 1978 was 15 per million train-miles; this was reduced to eight by 1963 and to five in 1990.[16]

ED_002700_00005500-00138

Chemical production incidents include those which occurred during HF production and use in the manufacture of various chemicals for such applications as pharmaceuticals, rocket fuel oxidants, plastics, dyes, and electroplating baths. Industries that use dilute HF solutions (i.e., aircraft manufacturing, stainless steel manufacturing, electronics manufacturing, and glass etching) report fewer HF releases.

EXHIBIT 8-7
Industry Segment and Number of HF Releases

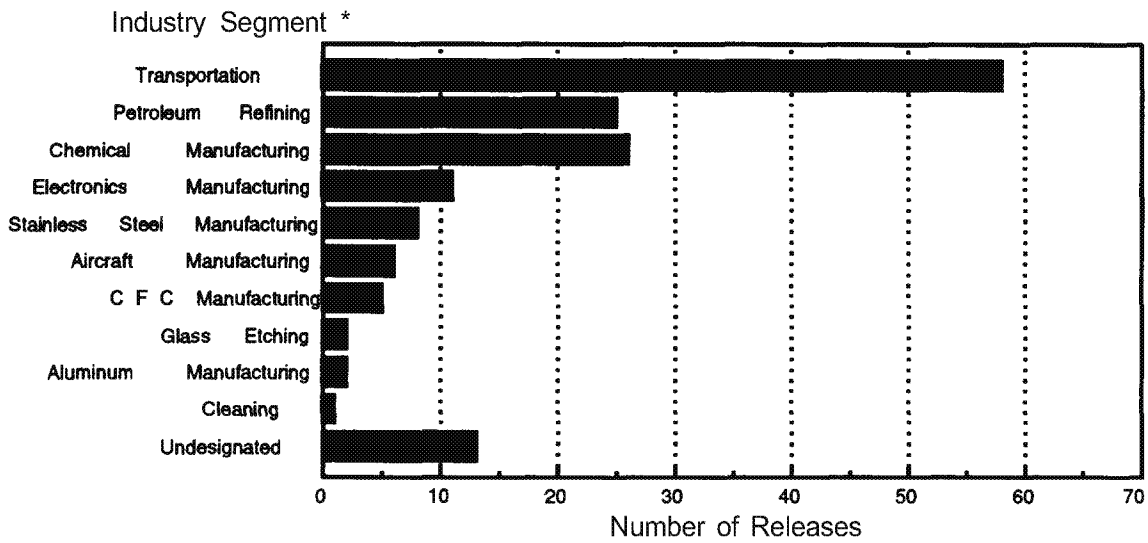

*Designations may not correlate with those in the databases, and categories (such as Chemical Manufacturing and CFC Manufacturing) may have some interchange

**Includes loading, unloading, and in transit.

Source: Compilation from ARIP, AHE, E R N S , H M I S , newspaper articles, and facility accident reports - corrected for overlap.

8.3.3 On- and Off-site Consequences

The potential consequences of an accidental release at a facility that handles hazardous chemicals are largely determined by the conditions of the release, the quantity, the behavior of the hazardous chemical in the environment, and the proximity and sensitivity of populations potentially exposed. The concentration of the hazardous material being handled is also critical in assessing the hazards posed to the public by the release. For example, a small release of anhydrous HF may pose a greater hazard to the public than a large release of aqueous HF at a concentration less than *40* percent. There have been HF releases involving anhydrous HF and various concentrations of aqueous HF. The potential hazards of HF exposure to the public depend largely on the concentration of HF used in various industry segments or processes. Releases from refineries using HF alkylation, for example, would likely involve anhydrous HF under conditions which could lead to formation of a dense vapor cloud that could migrate off-site; a release from etching operations would involve HF in concentrations less than 70 percent which would be less likely to migrate off-site.

ED_002700_00005500-00139

In order to determine the severity of release consequences, releases of anhydrous and aqueous HF have been analyzed separately. In the 155 releases examined from all data sources, there were 82 incidents involving anhydrous HF and 73 involving aqueous HF. The analysis of HF release migration and the evacuations, injuries, and deaths attributable to these HF releases indicate that anhydrous HF and aqueous HF with concentration 70 percent or more pose the greatest potential hazard to the public and facility employees.

Migration Off-Site

When released, anhydrous HF and aqueous HF in concentrations of 70 percent or higher may migrate off-site and pose a threat to the public. The **ARIP** database includes ten HF incidents in which migration off-site of the released material was reported. These include seven releases of anhydrous HF or 70 percent aqueous HF. In addition, three incidents were reported involving aqueous HF in concentrations less than 70 percent; in one of these incidents, migration of HF off-site in the air was reported, but in the other two, HF was repotted released to water.

Evacuation

Evacuations resulting from accidental HF releases were analyzed because they may indicate a perceived hazard to the community. Of all reported HF releases, 12 releases, or seven percent, resulted in evacuations. Ten of 12 evacuation events involved anhydrous HF. This indicates that it may be more appropriate to focus attention on releases involving anhydrous rather than aqueous HF. Transportation-related incidents accounted for most of these evacuations, perhaps because no containment or mitigation measures are likely to be in place, as would be the case at a fixed facility. For example, a Consolidated Rail Corporation tank car leaked 800 gallons of HF, causing a 2.5-mile vapor cloud and required the evacuation of 1,500 people in a 1.1 square mile area. Many of the incidents requiring evacuation involved large HF releases of more than 5,000 pounds, The largest release (Marathon Petroleum) caused the largest evacuation incident in which approximately 4,000 members of the general public were evacuated. The smallest release incident which had an evacuation involved a spill of three pounds.

Deaths and Injuries

Deaths and injuries have resulted from 28 reported HF releases. Exhibit 8-8 shows the number of releases that caused injury/death from releases of HF at concentrations below 70 percent and those equal to or greater than 70 percent, including anhydrous HF. Two releases resulted in fatalities. In one case, two employees died when a pipeline ruptured releasing 150 pounds of 70 percent HF at McDonnell Douglas. In the other case, an employee died and 100 other employees were injured, as a result of a 29,500-pound vapor release of UF, from a cylinder failure at Kerr-McGee, that generated about 3,350 pounds of HF.

Of the releases that caused at least one injury, seven were releases of aqueous HF less than 70 percent concentration and 20 were releases of anhydrous HF or HF 70 percent or higher. The only case where injuries to the public were reported was due to a release of anhydrous HF.

Exhibit 8-9 shows the number of injuries or deaths associated with either aqueous and anhydrous HF incidents. A total of 167 on-site injuries and 1,108 off-site injuries were reported for the incidents examined. All of the off-site injuries were attributable to two incidents. The Marathon HF release caused 1,037 off-site injuries. The remaining 71 injuries resulted from the Consolidated Rail tank car leak created by a failed weld. Another 22 injuries were not differentiated as off- or on-site. Injuries occurred from accidents involving as little as one pound of HF (Markair) and concentrations as low as one percent (Learjet). Most injuries to the public or facility employees, however, occurred following large vapor releases.

ED_002700_00005500-00140

EXHIBIT 8-8
Releases of Aqueous and Anhydrous HF Resulting In Injuries or Deaths

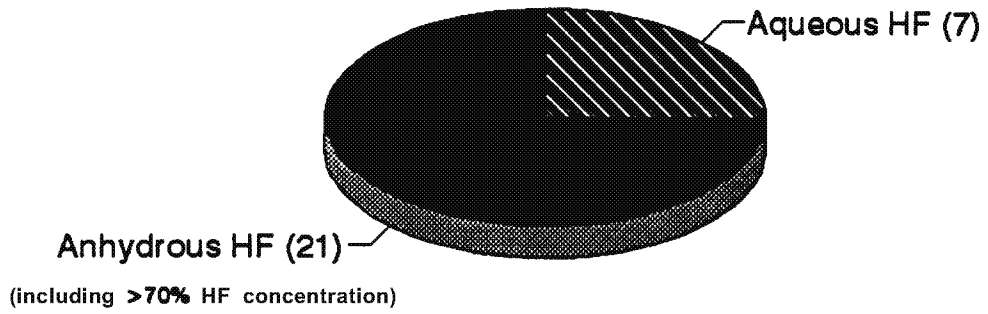

Sources: ARIP, AHE, ERNS, HMIS Data Bases and Other Sources (In Appendix XIII), and *Segregation of Data Bases for Anhydrous and Aqueous HF* by W.J.Hague, Allied-Signal, 8/1/92

EXHIBIT 8-9
Number of Reported Injuries or Deaths Associated with all HF Releases

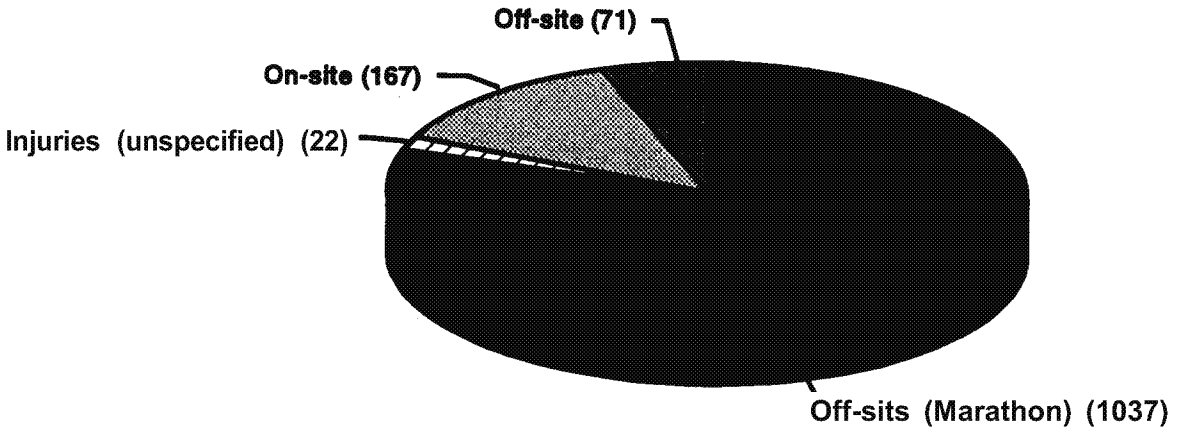

Sources: ARIP, AHE, ERNS, HMIS Data Bases and Other Sources (In Appendix XIII)
Note: 27 incidents caused at least one injury.

ED_002700_00005500-00141

The average number of injuries per release also provides an indication of the relative hazard posed by anhydrous versus aqueous HF releases. **With** the Marathon incident included, there were 66 injuries per anhydrous HF release, and 2.3 per aqueous HF release. **Without** the Marathon incident, the average number of injuries per release for anhydrous HF is 13, which is still more than 5 times the average number of injuries per aqueous HF release. Exposures due to aqueous releases are probably localized and limited to the facility employees working directly with the HF, whereas the vapor released in an anhydrous HF release may also injure other workers. In fact, most of the accidents involving aqueous HF were releases of small quantities, which were contained within the facility.

Thirty-five percent of the HF incidents reported from refineries resulted in injury. Twenty-three percent of releases involving the transport of HF resulted in injury. In addition, 50 percent (i.e., 3 of 6) of the HF incidents at aircraft manufacturing facilities resulted in injury. It is unclear why this industry segment has such a high rate of employee injuries related to releases of HF. Injury rates in other industry segments were somewhat lower.

8.3.4 Transportation Incident Analysis

There were 55 transportation incidents out of the 155 HF releases reported in the data sources considered. These included releases during HF transport and loading/unloading operations. Transportation releases included 27 releases of aqueous HF and 28 releases of anhydrous HF. Quantities of anhydrous and aqueous HF released during transportation incidents are generally small. The amount released was reported for 40 of these incidents; 53 percent of the releases were less than 100 pounds.

The average amount of anhydrous HF released during transportation incidents, approximately 425 pounds, is also smaller than the average anhydrous release at **fixed** facilities. One uncharacteristically large incident involved a release of 6,400 pounds. When this release is excluded from consideration, the average release quantity decreases to 273 pounds. Releases from the refining, chemical, and metal manufacturing industries averaged 5,200 pounds, 1,400 pounds, and 2,900 pounds, respectively.

A recent study prepared for the Hydrogen Fluoride Panel of the Chemical Manufacturers Association (CMA) that focused on incidents involving tank cars and tank trucks revealed that almost five billion pounds of anhydrous HF have been shipped by rail and tank truck over the past ten years, with very few release incidents and no fatal or serious injuries as a result of anhydrous HF releases during transportation.[17] The study also reported that over the past 20 years, a total of 13 anhydrous HF releases from tank cars and tank trucks have been reported to DOT, as shown in Exhibit 8-10.[18] There were no injuries resulting from these releases.[19] The study also concluded that the number and frequency of tank-car and tank-truck incidents involving loss of anhydrous HF has decreased over the last 10 years. It also found that release amounts were small, with 10 of 13 losses in the past five years involving less than 200 pounds. According to the study, transportation of anhydrous HF, using existing road and rail equipment and current safety standards, has resulted in minimal hazard to the public and others.

EXHIBIT 8-10
Analysis of Anhydrous HF Incidents

Mode of Transportation	Number of Incidents Involving HF	Number of Trips	Pounds of HF Shipped (Thousands)	Incidents per 10,000 Trips	Incidents per 650 M lbs.
Rail	12	40,000*	5,000,000*	3	1.6
Truck	1	20,000*	650,000*	0.5	1.0

* As estimated by CMA

Source: Chemical Manufacturers Association, Transportation Safety of Anhydrous Hydrogen Fluoride, Hydrogen Fluoride Panel, Washington, D.C., March 30, 1992. (103D)

ED_002700_00005500-00143

ENDNOTES

1. Memorandum, Subject: *OSC Report to the National Response Team Major Air Release of Hydrofluoric Acid Marathon Petroleum Company Texas City, Galveston County, Texas - October 30 to November 1,* 7987, From: Robert M. Ryan, On-Scene Coordinator, U.S. Environmental Protection Agency Region IV, To: National Response Team, March 4, 1988. (370)

2. Mason, R.J., Marathon Oil Company, comments on the draft *Chemical Emergency Preparedness and Prevention Advisory on Hydrogen Fluoride,* January 15, 1993. (82d)

3. Memorandum, Subject: *OSC Report to the National Response Team.*

4. Memorandum, Subject: *OSC Report.*

5. *Chemical Engineering,* "HF's Future is Up in the Air," May 1990, p 39. (150)

6. Memorandum, Subject: OSC *Report.*

7. Mobil Torrance Refinery, *Report on Cause and Origin of November 24, 7987 Fire and Explosion,* Torrance, California, December 18, 1987. (181 b)

8. *Hazardous Materials Intelligence Report,* "Leak of Toxic Gas at OK Uranium Processing Plant," January 10, 1986, p 1. (520)

9. U.S. Nuclear Regulatory Commission, *Assessment of the Public Health impact from the Accidental Release of UF_6 at the Sequoyah Fuels Corporation Facility at Gore, Oklahoma,* Washington, D.C., March 1986, Document Number NUREG-2289-VI. (491)

10. US. Environmental Protection Agency, *U.S. EPA Release Prevention Questionnaires,* 1987-I 988. (490)

11. U.S. Environmental Protection Agency, *AR/P Report - Southwest Refining, Corpus Christi TX,* 1991. (Not logged into the ARIP database).

12. Letter, *Concern over Segregation of Data Bases for Aqueous and Anhydrous HF,* From:William J. Hague, Allied-Signal, To: Craig Matthiessen, U.S. Environmental Protection Agency, August 18, 1992. (293.3)

13. U.S. Environmental Protection Agency, *U.S. EPA Release Prevention Questionnaires.*

14. National Transportation Safety Board, *Anhydrous Hydrogen Fluoride Release from* NATX *9408, Train No. BNEL3Y at Conrail's Receiving Yard Elkhart, Indiana, February* 4, 1985, Hazardous Materials Accident Report, Washington, D.C., November 27, 1985, Document Number: NTSB/HZM-85-03. (20)

15. *AHE Database,* U.S. Environmental Protection Agency, 1960-I 987. (05)

16. Chemical Manufacturers Association, *Transportation Safety of Anhydrous Hydrogen Fluoride,* Hydrogen Fluoride Panel, Washington, D.C., March 30, 1992. (103D)

17. Chemical Manufacturers Association, *Transportation Safety of Anhydrous Hydrogen Fluoride.*

18. Strickland, Gordon D., Chemical Manufacturers Association, comments from technical review of *Hydrogen Fluoride Study, Report* to *Congress,* Draft May 8, 1992, June 5, 1992. (466.9)

19 Chemical Manufacturers Association, *Transportation Safety of Anhydrous Hydrogen Fluoride.*

20. Strickland, Gordon D., Chemical Manufacturers Association.

ED_002700_00005500-00145

9. MODELING HYDROGEN FLUORIDE RELEASES

The statutory language requiring the HF study states that EPA should examine the potential hazards of HF to the public, considering a range of events, including worst-case accidental releases. In response to the Congressional mandate, EPA has carried out consequence analysis, using computer modeling techniques, for a range of scenarios for accidental releases of HF. This chapter briefly describes the elements of a consequence analysis, the purpose of such an analysis, and presents background on the types and characteristics of models used to analyze the consequences of HF releases, This is followed by a discussion of the selection of models by EPA and the development of worst-case accident scenarios used in the HF study. The chapter concludes with a statement of the limitations of the modeling results, presentation and analysis of the results, and evaluation of the sensitivity of the modeling results to certain input parameters.

9.1 Consequence Analysis

Consequence analysis is used to estimate the potential health impact or damage to property and environment from a release of a hazardous substance. It usually involves a determination of the amount of substance released, the rate at which it enters the air, and dispersion of the airborne material downwind under particular meteorologic conditions to a certain exposure level, damage level, or dose (concentration multiplied by duration of exposure).

Consequence analysis can be used:

- to compare impacts of results from different release scenarios with each other to assess the significance of various release scenarios;
- to illustrate how model variations or input uncertainties influence the results; and
- to demonstrate how site-specific parameters can significantly alter the results of such analyses.

Consequence analysis is not designed to determine real-time impacts associated with an event; the greatest value of consequence analysis is in determining the potential impacts of a range of conditions and scenarios for planning purposes and to examine ways to minimize those impacts. However, caution must be used when reviewing consequence analysis results. Consequence analysis ignores the probability of a release occurring. If used as the sole basis for an operational decision, consequence analysis may lead to actions which could actually increase the overall risk at a facility.

Consequence analysis for a specific facility would likely include the population potentially affected by a release. The number and location of people around the facility is an important consideration for planning. Appendix XV presents the number of people estimated to live within circles around selected HF facilities within one-mile and five-mile radii. In the event of a release of HF, it is likely that only a fraction of the people within these circles would be exposed. The population potentially exposed to a release would be determined by factors such as the weather conditions (i.e., ambient temperature, atmospheric stability, wind direction, and wind speed) and the accident scenario (i.e., the rate of release, type of release, conditions of release, and the plume width).

ED_002700_00005500-00146

One common method to estimate the potential consequences of a release is to model the dispersion of the release. Models are valuable tools for analyzing and estimating the behavior and effects of chemicals accidentally released into the atmosphere. Most dispersion models generate data on contaminant concentration at downwind distances. Modeling information has been used by industry and government to determine the possible consequences of a release and to plan for emergency response and release notification. Also, modeling has been used to assess the relative effectiveness of various accident prevention, hazard reduction, and mitigation techniques on the consequences of the release.

9.2 Models for HF Releases

Many models are available for predicting the dispersion of chemical releases. However, only a few are able to account for many of the particular properties and release characteristics of HF. Current and ongoing research has focused on developing models for HF and conducting HF spill tests both to validate the models and to increase knowledge about HF release characteristics. This section discusses HF field tests and describes the models that may be suitable for estimating HF dispersion.

9.2.1 Field Tests

During the summer of 1986, Amoco Oil Company and Lawrence Livermore National Laboratory conducted a series of six experiments involving atmospheric releases of HF. The studies, known as the Goldfish test series, were conducted at the Department of Energy Liquefied Gaseous Fuels Spill Test Facility in Frenchman's Flats, Nevada. The purpose of the experiments was to examine source characteristics, dispersion properties, and water spray mitigation techniques. The test results indicated that approximately 20 percent of the liquid released flashed to vapor and the remaining 80 percent of HF was transported downwind, along with the HF vapor, as an HF/water vapor aerosol. The cold dense gas was detected at substantial distances downwind with no drop-out of HF. It was also determined that to estimate HF dispersion, thermodynamics and interactions with atmospheric water vapor must be considered. In addition, the tests showed that water sprays were effective in reducing HF in the vapor cloud.[1,2,3,4]

To formalize the effort to continue HF field tests, the participants in the Goldfish tests formed the Industry Cooperative HF Mitigation/Assessment Program (ICHMAP), which then sponsored a series of tests of the effectiveness of water sprays on mitigating anhydrous HF releases. The tests, sponsored and funded by twenty companies from the chemical and petroleum industries, were known as the Hawk HF Test Series. These studies of water spray mitigation showed that water to HF ratios of 40:1 could result in 90 percent reduction in the amount of airborne HF.[5]

9.2.2 Model Characteristics for Estimating HF Dispersion

Computer modeling systems are often used to model accidental releases of hazardous materials and estimate the effects of such releases. in order to deal realistically with a release of HF, a computer model should be able to take into account the unusual properties of HF and other factors, including the following:[6]

- HF Thermodynamics. When HF is released into the atmosphere from a pressurized vessel at a temperature above its boiling point, it first flashes to vapor, entraining liquid droplets of HF as aerosol. The HF cloud then is subject to various thermodynamic effects which sometimes produce opposing results. The HF polymerizes, resulting in slumping and gravity spreading of the cloud. As air mixes with the cloud, the HF dissociates in a process that

ED_002700_00005500-00147

absorbs heat and cools the cloud. The evaporating aerosol also cools the cloud. The cooling of the cloud increases its density. As moist air is mixed into the cloud, HF reacts with the moisture to release heat, warming the cloud and decreasing its density. As the HF aerosol absorbs water from the air, its volatility decreases and it consequently travels further as an aerosol. Thus, the final density of the cloud is dependent on the aerosol fraction, the humidity of the air and the rate of mixing of the air with the cloud of HF. The model must consider all three of these factors.

- Dense Gas Dispersion. When a dense gas such as HF disperses, it undergoes gravity spreading as a result of the difference in density between the cloud and the ambient air. At the same time, ambient air is entrained into the cloud. The model must consider the amount of gravity spreading and the rate of entrainment of air; it must also consider the effect of surface roughness on these processes (e.g., the effect of the turbulent conditions encountered as a result of flow over surface structures at an industrial site and the terrain surrounding the facility).

- Release Duration and Averaging Time. Averaging time is the time over which the concentration of the contaminant is averaged. Averaging time is usually chosen to correspond to an exposure time for which an individual would suffer a certain health impact. For releases of short duration, under windy conditions, the cloud would likely pass by quickly and not expose an individual for the full averaging time. To avoid situations where there is no exposure to an HF cloud during much of the averaging time, the preferred averaging time (and therefore exposure time) should be less than the release duration.

- Jet Releases. When a gas flows out of a hole at a high velocity (e.g., when a tank or pipe containing compressed or liquefied gas is punctured or broken), a gas jet is formed. Jet behavior affects the degree of cloud dispersion through entrainment of air and subsequent dilution. Modeling of HF gas jets, therefore, must account for this type of dispersion.

- Effects of Mitigation Devices. Models should have near-field modeling capabilities to assess of the effects of mitigation systems in place or planned. For example, to model water mitigation systems, the cloud properties at the downwind distance where the water mitigation system would be located should be known. The cloud properties at that distance are then used as the baseline for modeling the water mitigation system.

- Effects of Surface Roughness. There is controversy among modelers regarding the influence of surface roughness on the dispersion and gravity spreading of a dense gas cloud. Surface roughness is a measure of the irregularity of the terrain over which a cloud passes. Irregularities include mountains, trees, and facility structures (process vessels). Flat, rural areas are characterized by a lack of irregularities. The size of the surface feature relates to the size of a surface roughness factor (e.g., large irregularities are assigned large factors). The phenomenon of neutrally buoyant clouds passing over surface irregularities increases turbulence and consequently increases dispersion. Alternatively, dense gas clouds like HF hug the ground and may not pass over these surface features but channel around them, potentially leading to less dispersion. As a general 'rule of thumb' for dense gases, surface roughness factors that represent a large fraction of or are equal to the cloud height should not be used. Based on limited wind tunnel tests, some analysts assert that surface structures do create mixing and help disperse a cloud; others contend that the wind tunnel test

ED_002700_00005500-00148

results are not conclusive and that only very low surface roughness factors should be used. Additional research is necessary to resolve this issue.[7,8,9,10]

9.2.3 Available Models

There are several computer modeling systems in the public domain that can be used to model an accidental release of HF. Most are not specific only to HF releases. **Exhibit** 9-I presents some dense gas models that are used to model HF releases. The ways these models incorporate the factors necessary for modeling HF releases (discussed above) are briefly noted in the exhibit,

Except for HGSYSTEM, the dense gas models discussed above do not take into consideration the thermodynamic properties of HF. Because of the modeling **difficulties** associated with HF, a subcommittee of the ICHMAP developed HGSYSTEM, designed to simulate the consequences of an accidental release of HF and assess the effectiveness of mitigation systems." HGSYSTEM is composed of a group of models which can be used in various combinations to describe the type of release (i.e., vapor jet, evaporating pool) and the area of dispersion (i.e., near-source, far-field). HGSYSTEM includes two spill models, one (HFSPILL) used to compute the amount of HF released from pressurized storage, and the other (EVAP) used to estimate HF emissions from an evaporating pool. HFSPILL can be used with the HFPLUME model to predict the jet behavior and near-source dilution from a pressurized release.

HGSYSTEM also includes two models for prediction of downwind dispersion. HEGADAS-5 is a version of the HEGADAS model for simulating heavy gas dispersion from area sources modified to deal with HF. HEGADAS-5 includes heat and water vapor effects and allowance for HF thermodynamics, as well as revisions to the treatment of gravity spreading of dense clouds, treatment of a wide range of surface roughness conditions, and improved treatment of along-wind dispersion. PGPLUME is a Gaussian model for treatment of HF plumes that do not exhibit dense gas behavior (e.g., if the plume is released vertically or the release is elevated). PGPLUME can be used for such a release after it has diluted sufficiently so that the thermodynamic and jet entrainment calculations in HFPLUME are no longer required. HGSYSTEM also contains models that can be applied to any heavy gas. A separate model from HGSYSTEM, HFSPRAY, describes the mitigation of HF releases with water sprays.

9.2.4 Comparison of Modeling Results with Spill and Wind Tunnel Tests

There have been a number of studies involving modeling of HF and comparison of the results of modeling with field and wind tunnel test results. Some of these studies are described in this section. The studies frequently have contrasting conclusions about verification of certain models. This attests to the different assumptions and methods used in running the models and the uncertainties in the algorithms used to describe HF dispersion.

SLAB. DEGADIS and HGSYSTEM Comparison with Goldfish Tests. The evaluation of the SLAB and DEGADIS dense gas dispersion models using data obtained from HF spill tests is presented in several reports.[12,13,14] In a 1987 report, several simplifications were made in order to apply the models to the **Goldfish** spill test data. Because neither SLAB nor DEGADIS was designed to handle a pressurized jet release (in the Goldfish tests, HF was released as a jet under pressure), the release was modeled as a small area source. Another simplification involved aerosolization, which neither model adequately handled. It was assumed that the aerosolized portion of the HF release instantaneously evaporated. This resulted in a much lower initial cloud temperature which was input to the SLAB and DEGADIS programs. Several ad hoc modifications to SLAB, discussed in the following paragraph, improved its concentration predictions.[15]

ED_002700_00005500-00149

Exhibit 9-1
Examples of Models Available for Simulation of Accidental Releases of HF

Model	HF Thermodynamics	Gravity Spreading	Finite Duration, Averaging Time	Jet Release	Mitigation
SLAB	Assumes ratio of vapor flashed and liquid; computes resulting temperature	Treatment may not be applicable to large surface roughness	Appropriate treatment	Vertical and horizontal jets	Does not simulate effects
DEGADIS	Must develop concentration vs. density relationship outside of model	Treatment may not be applicable to large surface roughness	Not appropriate for long travel times	Vertical jets	Does not simulate effects
HGSYSTEM	Effects computed at each downwind distance	Treatment applicable to industrial settings	Appropriate treatment	Jet release at all angles	Does not simulate effects but can start model at any downwind distance with estimated cloud properties
BP CIRRUS	Does not incorporate thermodynamics	Treatment does not incorporate large obstacles such as buildings and plant structure	Assumes unimpeded flow of material	Direction of jets unspecified	Does not simulate effects

Additional Notes on Models:

SLAB is a dense gas model developed by the Lawrence Livermore National Laboratory. It can be used to model continuous, finite duration and instantaneous releases.

DEGADIS (Dense Gas Dispersion Model) was developed by the Coast Guard to predict contaminant movement for heavier than air gases. instantaneous and continuous ground level releases. DEGADIS is accepted as a state-of-the-art model for use in emergency response planning and vulnerability zone analysis. The South Coast Air Quality Control District used DEGADIS as the basis of their consequence analyses in support of the development of Rule 1410.

HGSYSTEM is a package of models (which can be run individually or in a series, incorporating the output from one model into another) for predicting the release and dispersion behavior of HF or ideal gases. It was developed for the Industry Cooperative HF Mitigation/Assessment Program begun in late 1987 to study and test techniques for mitigating accidental releases of HF and to better estimate impacts of such releases. This program was sponsored by 20 companies from the chemical and petroleum industries.

BP CIRRUS is a package of models developed by the Corporate Safety Services of BP International limited. The purpose of the package is to forecast the effects of a release of hydrocarbon or chemical liquid or vapor. Its recommended uses include conducting or cross-examination of consequence modeling in relation to the design of new facilities, in risk assessment studies, and in developing emergency plans for currently operating facilities. CIRRUS is the same as HGSYSTEM, except for the pool evaporation model which has been replaced for the UK Health and Safety Executive.

Sources:
Memo from D.N. Blewitt to R.C. Wade, April 1, 1991.
User Guide for BP CIRRUS.
Koopman, Ronald P., Lawrence Liiermore National Laboratory, Comments on Draft HF Study (Doc 289).
Fryman, Chuck, BP Oil, Comments on Draft HF Study (Doc 188.88).

ED_002700_00005500-00150

SLAB is a steady state model that was modified to apply to the short duration of the Goldfish spill tests. The modified SLAB model gave good agreement with experimental results for the first Goldfish test but underpredicted HF concentrations based on the second and third Goldfish tests. Other modifications were made to the model that improved agreement with the experimental data, including addition of an aerosol evaporation model, modifications to the entrainment and velocity equations, and changes to the assumed vertical concentration profile. For example, the addition of a simple aerosol evaporation model to the SLAB model allowed the vapor and droplets to be treated as a single fluid with a modified molecular weight to account for the HF/water aerosol, thus increasing the density above that of the pure vapor. Evaporation of the aerosol was assumed to occur linearly with downwind distance, resulting in a steady decrease in molecular weight as the aerosol evaporated.[16,17]

In a 1988 report, the steady state model DEGADIS predicted maximum HF concentrations within a factor of two compared to the Goldfish spill test results. In some cases DEGADIS underpredicted and in other cases overpredicted maximum concentrations, with the ratio of DEGADIS-predicted to observed maximum concentration ranging from 0.6 to 1.3.[18] The 1987 report, cited above, found the model results difficult to interpret because the length of time for which the average concentration was calculated varied, depending on downwind distance.[19] It was also difficult to generalize about the model's tendency to overpredict or underpredict at various distances because the test data were not consistent in this regard.

A 1992 study compared the results of DEGADIS, SLAB, HGSYSTEM, and other models to field test data from five sites, including the Goldfish tests.[20] DEGADIS and HGSYSTEM were within a factor of two of measured concentrations from two Goldfish tests. This study further found that SLAB tends to underpredict the Goldfish test data within a factor of five.[21]

HGSYSTEM results were compared with the results of the first three Goldfish spill tests of HF.[22] HFPLUME and HEGADAS were used for modeling. The modeling results for plume centerline concentrations compared favorably with observed results, considering standard deviations and the uncertainties in modeling a limited number of experimental releases. In addition, HGSYSTEM predictions of cloud width agreed well with observed data.

HGSYSTEM Results Compared to Wind Tunnel Simulation Results. The dense gas dispersion modeling program contained in HGSYSTEM (discussed above) was used to model an HF release from a petroleum refinery. The results of modeling were compared to the results obtained from wind tunnel experiments on the dispersion of simulated HF releases in a scaled-down model of a petroleum refinery. These experiments used an inert gas mixture having the same density relative to air as calculated for a cloud of HF in air at its coldest temperature. Concentrations of the simulant gas, which was released from pipes near the center of the wind tunnel model, were measured as a time series; the times for each concentration measurement in the model were then scaled to simulate the equivalent times at a full scale facility. Several release scenarios were used. The same scenarios were used with HGSYSTEM, and roughness parameters derived from the wind tunnel scale model refinery and terrain were also used in HGSYSTEM. Concentrations predicted by the model were compared to the wind tunnel concentration results. The model predictions of downwind and crosswind concentrations were found to agree fairly well with the wind tunnel results.[23]

Water Spray Mitigation Modeling. The model HFSPRAY simulates the momentum, mass, and energy reactions between a water spray and a turbulent plume of HF in air. HFSPRAY can be a tool to quantify the effectiveness of water sprays, and may be used to evaluate specific installations, release scenarios, and weather conditions.[24] The model comprises two sets of equations, one to describe the gas phase and the other to describe the liquid drop phase. The model is capable of predicting flow velocities, temperature, water vapor and HF concentrations in two dimensions, for

ED_002700_00005500-00151

spraying in any direction. The Hawk water spray mitigation tests, a series of field tests using wind tunnels conducted in Nevada in 1988, have been simulated using the HFSPRAY model. Model predictions agreed well with the wind tunnel test results.[25] Recent studies show that the latest version of HFSPRAY has greater ability to describe mass, momentum, and energy transfer between water sprays and unconfined releases of HF, and that HFSPRAY correctly reproduces the flow fields induced in wind tunnel modeling of actual industrial systems.[26,27,28]

9.3 Modeling Used in HF Study

EPA selected and used models to evaluate the consequences of HF releases, The approach and considerations for the HF modeling are discussed below.

9.3.1 Basis for Selecting Models

For this study, several modeling systems including the models listed in Exhibit 9-I (BP CIRRUS, DEGADIS, HGSYSTEM, and SLAB) were considered for estimating the dispersion of HF upon release. In addition, EPA also considered the Areal Locations of Hazardous Atmospheres (ALOHA) model, the air dispersion modeling component of the Computer Assisted Management of Emergency Operations (CAMEO™) system.

ALOHA was eliminated from consideration because it contains a simplified version of DEGADIS and it does not sufficiently account for transient releases. Also, ALOHA is designed primarily as a screening model for planning emergency response.[29]BP CIRRUS was eliminated because HGSYSTEM contains the same dispersion model (HEGADAS), modified to specifically address HF releases. DEGADIS was briefly evaluated along with HGSYSTEM and SLAB. For releases longer than at least seven minutes, it was discovered that in the steady state mode, DEGADIS results will closely resemble the results from HGSYSTEM and SLAB. However, for relatively short duration releases of about one minute, DEGADIS in the steady state mode appeared to overpredict the HF concentrations and in the transient state mode appeared to underpredict the HF concentrations, compared with HGSYSTEM and SLAB. Consequently, DEGADIS modeling was not pursued further.

The HGSYSTEM dense gas dispersion model, HEGADAS, accounts for many of the critical physical/chemical processes that are considered important for HF dispersion. Some critical and unique features of HF dispersion include aerosol formation, polymerization, and hydrolysis. SLAB simulates atmospheric dispersion of denser-than-air releases including a ground-level evaporating pool, an elevated horizontal jet, vertical jet or stack release, or instantaneous or short-duration evaporating pool release. Both HGSYSTEM and SLAB can handle complex dispersion concepts such as aerosolization, transient releases, surface roughness, gravity spreading, and entrainment. Therefore, HGSYSTEM and SLAB were selected to estimate consequences of accidental releases of HF for this study. These models are discussed in more detail in Appendix XVI. The purpose of using two models was not to validate the models but to calculate potentially affected distances at certain dose levels using different models and comparing the results. The range of results demonstrates that even the complex dense gas algorithms in these models still have uncertainties in predicting HF dispersion. The range of numbers de-emphasizes the certainty or importance of individual output values while allowing comparison and evaluation of input release scenarios.

9.3.2 Considerations for Modeling

Modeling and source term assumptions and calculation procedures depend on both pre-release storage conditions and meteorologic conditions. Based on these conditions, HF may generate a liquid pool or a positively, neutrally, or negatively buoyant cloud upon release. The chart in Exhibit

ED_002700_00005500-00152

9-2 indicates some possible release mechanisms and considerations that should be applied when determining a model to use to assess impacts. This chart could be applied to any hazardous chemical release.[30]

Significant research has been conducted on the behavior of substances when they are released to air, including HF (see Section 9.2.1 on field tests on HF). Prediction of the behavior of a material released under accident conditions is extremely complex and difficult because of the many variables that influence the results. For example, the amount released and the rate at which a chemical enters the air are not precisely known and are usually estimated based on the storage and meteorologic conditions at the time of the event. Winds can shift and meander, causing unpredictable movement of a cloud, and obstacles along the path can channel a dense gas cloud or increase turbulence, affecting the degree of dispersion.

Model verification or validation is an issue in determining the credibility of these models. Although not performed in this study, model verification has been conducted using spill test data (i.e., Goldfish test) and wind tunnel data. Neither HGSYSTEM nor SLAB has been extensively tested for verification under different field conditions of humidity, release slope, surface roughness, or channel flow. However, modeling, when applied correctly, can provide valuable insight regarding potential exposure to a nearby community from various release scenarios.

Models are complex tools that can be difficult to use correctly. Moreover, the model predictions of travel distances of a release are only estimates, regardless of the model used. Therefore, no single number or result from a specific model can be asserted to be the correct answer or representative of other release conditions.[31]

9.3.3 Modeling inputs

HGSYSTEM and SLAB require the user to enter a variety of data about storage, release, and ambient conditions. Consistent with the Congressional mandate, model input data were chosen to represent worst-case conditions and produce a large HF release. The modeling inputs were compiled from diverse sources including local and state governments, facilities that use HF, accident data, process design data, and other modeling efforts.[32,33,34,35,36,37,38] Some characteristics of HF that are important for modeling are discussed in Section 9.2.2. Many of the inputs are based on the configurations and conditions of HF process operation and storage vessels at actual facilities. It must be pointed out that these data may not represent configurations and conditions for HF facilities as a whole. For example, the operating conditions and flows of a Phillips licensed HF alkylation unit may not be the same as the operating conditions and flows of a UOP licensed HF alkylation unit.

The general guidelines for choosing certain inputs are discussed below. The specific data used in modeling depend on the scenario modeled. Also, the modeling inputs were selected to produce the worst-case release scenario. The scenarios are discussed in detail in Section 9.5. For a complete listing of specific model inputs for HGSYSTEM and SLAB, see Appendix XVII.

- **Temperature.** Storage temperatures reported at HF facilities were reviewed and from these, a temperature was chosen which would lead to a rapid release rate. HF boils at 19°C (67°F), which is normal room temperature. HF stored above its boiling point would flash on release, while below its boiling point, it would likely form a pool. Consequently, typical storage and ambient temperatures above the boiling point of HF were selected.

ED_002700_00005500-00153

Exhibit 9-2
Release Mechanism Flowchart

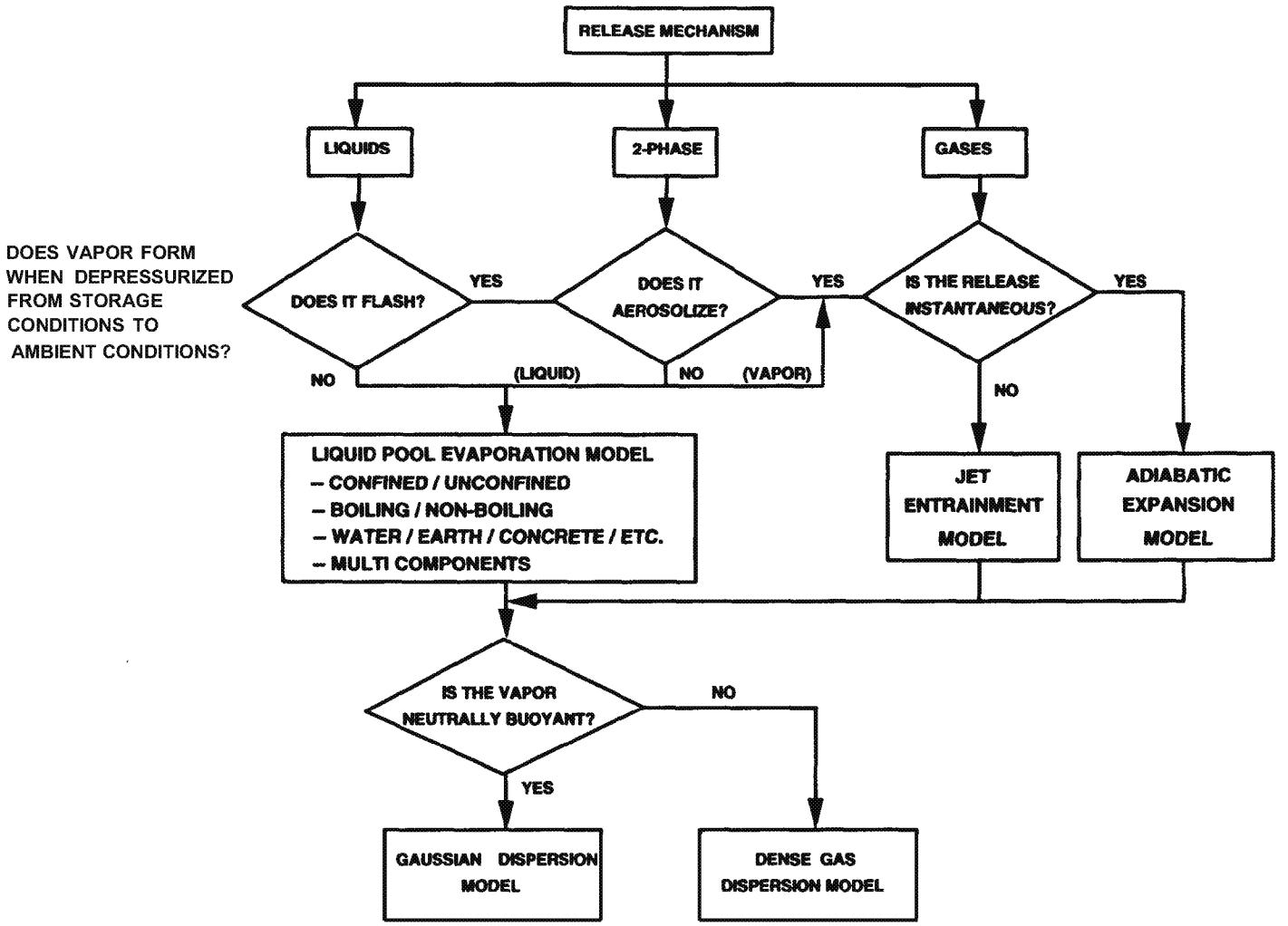

ED_002700_00005500-00154

- **Pressure.** The pressure selected for modeling was based on the highest pressure for the particular process or storage operation described in the scenario. The highest pressure would result in the largest release of HF to air.

- **Hole Size.** One to two inch diameter holes were used in modeling based on common pipe diameters in use (release due to corrosion, embrittlement, fatigue, accidental shearing, etc.). For modeling catastrophic vessel failure, the holes were either based on the puncture hole created by a train rail in the case of a derailment or on the hole size necessary to empty a vessel in approximately 10 minutes.

- **Release Duration.** Duration of the release was based on the time for the maximum quantity (i.e., the entire contents) in a vessel to be released from the hole given the capacity of the vessel as well as the location and diameter of the hole. The maximum quantities in the process and storage vessels were determined from data provided by SCAQMD on actual facilities, information obtained during facility visits, and on studies conducted by the HF facilities themselves. When the release point is not directly associated with a large storage volume of HF, (e.g., pump seal failure), a default value of 20 minutes was used as the maximum time estimated to empty or shut down the system/equipment and stop the flow.

- **Prevention and Mitigation Systems.** Water sprays and deluge systems were assumed to reduce an HF release by the amount observed in field tests.[39] Emergency de-inventory and automatic shutoff times were assumed to reduce the duration of the HF release. The time to stop the release through mitigation is based on facility estimates obtained during site visits,

- **Release Height.** Release height is an estimate based on facility visits and the general dimensions of HF process and storage vessels.

- **Relative Humidity.** Relative humidity of 50 percent was chosen to incorporate the effects of HF reacting with water in the atmosphere in the modeling results.

- **Surface Roughness.** Surface roughness is an estimate of the effect of surface terrain and the presence of buildings or other man-made structures on the movement and dispersion of a vapor cloud. A surface roughness of 0.03 meters, simulating a rural area, was chosen because a small surface roughness value is generally expected to yield larger HF doses downwind. Section 9.2.2 discusses the controversy surrounding use of large surface roughness values that simulate industrial settings.

- **Meteorological Conditions.** Except where noted, two sets of meteorological conditions were assumed for modeling. The conservative case, which would result in less dispersion, includes low wind speed (3.4 miles per hour or 1.5 meters per second), stable atmospheric stability conditions (F stability), and rural surface roughness conditions, An inversion, a specialized nighttime condition that prohibits the vertical dispersion of surface releases, was not considered in this study. A more likely case involves wind speed of about 12 miles per hour (5.0 meters per second), neutral atmospheric conditions (D stability), and rural surface roughness conditions. Atmospheric stability is a measure of the turbulence and mixing in the atmosphere near the ground. The most turbulent conditions (A stability) occur on sunny days with wind speeds less than 3 meters per second. The most stable conditions (F stability) occur in calm, pre-dawn hours.

ED_002700_00005500-00155

A sensitivity analysis was performed on several input parameters (i.e., wind speed and stability, emission rate, relative humidity, and surface roughness) to determine the relative influence that changes in the input parameters have on modeling results. The sensitivity analysis is described in Section 9.8.

9.3.4 Exposure Guidelines for Modeling

The primary hazard to the public associated with HF is inhalation of vapor or fumes, which can damage mucous membranes and lungs and possible cause death. Dispersion modeling can be used to estimate the concentration of HF in a vapor cloud at certain distances. However, to determine the potential health effects associated with inhalation of a particular concentration of HF, the amount of time an individual is actually exposed to the HF must also be known. The exposure concentration for a specific time period is called a dose. There are several accepted inhalation exposure concentration guidelines, as described in Chapter 2, that can be used as a dose threshold for modeling inhalation exposure. These include the Immediately Dangerous to **Life** and Health (IDLH) level, based on a 30 minute exposure, and the Emergency Response Planning Guideline level 3 **(ERPG-3)**, based on a 60 minute exposure.

Accidental releases are often of short duration. It may not be appropriate to model a short duration accidental release using exposure concentration guidelines established for long exposure periods. In short duration releases (e.g., one minute) under windy conditions, the HF cloud would likely pass by quickly and not expose an individual for the 60 minutes required to reach the ERPG-3. Using ERPG-3 in this case would not be appropriate if the dose-response relationship of the chemical is non-linear (i.e., the effect of exposure to a 30 ppm concentration for 30 minutes is not equivalent to the effect of exposure to 900 ppm for one minute). However, the dose-response relationship for HF has been described both as **non-linear**[40,41] and as **linear.**[42,43] Consequently, the exposure time associated with the dose should be as close to the duration of the release as possible. Unfortunately, for short duration releases, few exposure guidelines with short exposure periods appear to be available in the literature or widely accepted. For example, the United Kingdom's Health and Safety Executive has proposed a 'Dangerous Toxic Load" of 12,000 ppm HF for one minute; this level, however, has not yet been published officially.[44]

EPA's modeling efforts used the **IDLH** as the main dose threshold. This exposure level would represent conditions associated with a potentially life-threatening event. Specifically, the modeling was carried out based on the scenarios discussed in the next section, to determine the greatest distance to the **IDLH** level, as an indication of the area in which people might be exposed to a life-threatening dose. In select scenarios, distances were calculated to the ERPG-3 level. Additional information on equations used to relate concentration, duration of exposure, and potential fatalities may be found in Appendix V.

The HGSYSTEM and **SLAB** models have the capability to determine average concentration over a defined exposure time. In estimating dose, both models assume a linear relationship between effective dose and exposure time. This means that the **IDLH** is reached when all of the HF concentrations averaged over a 30 minute period equal 30 ppm.

9.4 Worst-Case Accident Scenarios

The statutory language for the HF study requires that EPA examine the potential hazards of HF to the public considering a range of events including worst-case accidental releases. This section describes one approach for developing scenarios of worst-case HF releases.

ED_002700_00005500-00156

9.4.1 Possible Definitions of Worst-Case Accident Scenarios

There is no single definition for a worst-case accident scenario. Facilities, government agencies, and the public may each have different interpretations. Some have indicated that worst-case is represented by the high consequence event of a "total loss of containment" of the largest vessel or container on-site. However, others argue that instantaneous vessel failure is highly unlikely and therefore other more probable events are worst-case events even if the consequences are not as large as the catastrophic vessel failure. There is a debate over the importance of probability and consequence in determining the worst-case scenarios. Therefore, different groups (e.g., industry and the public) may consider different accident scenarios to represent the worst case.

For regulatory programs, government agencies sometimes need to define worst-case scenarios. The Texas Air Control Board (TACB) considers the worst-case release as a release that causes the maximum impact or consequence, including maximum area or distance to the chemical's IDLH.[45] Alternatively, the South Coast Air Quality Management District in California has used serious near worst-case conditions which it considers to be less likely to occur and of greater magnitude than those release scenarios considered in California's Risk Management and Prevention Programs to determine risk of HF facilities in the Basin.[46] EPA developed an approach based on "credible worst-case assumptions" in the Technical Guidance for Hazards Analysis (Green Book) to help local officials screen and identify zones around a facility for which the community is potentially vulnerable from a chemical release. For gases, the total quantity of a vessel is assumed to be released to air over a period of 10 minutes. For liquids, the total quantity of a vessel is assumed to be spilled instantaneously, spreads out into a pool one centimeter deep, and evaporates. These scenarios, however, are not sufficiently specific or complex for defining worst-case scenarios for HF.[47] The Green Book calculation only provides a generic screening tool for prioritizing emergency planning and was not intended to account for the complex release scenarios particular to different industries or operations involving HF.

9.4.2 Worst-Case Accident Scenarios based on Congressional Mandate

Because the Congressional mandate emphasized hazards posed to the public, the worst-case accident scenario should reflect the most severe consequences from a release. Releases in this scenario category would include catastrophic vessel failures under worst-case conditions of wind and atmospheric stability and topography. However, Congress also required consideration of a range of events, not just the events involving the largest quantity of HF. The range of events can reflect the range of operations and equipment that involve HF (e.g., unloading, pumping, reacting, purifying). Within each of these operations, the release scenario that results in the worst-case consequence can be developed. For example, a worst-case scenario for an unloading/loading operation would be the complete failure of the hose. Scenarios other than catastrophic vessel failure may also represent potential incidents with a greater likelihood of occurrence.

For this study, the worst-case scenarios were developed to reflect the conditions under which the public might be exposed to the greatest hazard from an HF release. These worst-case scenarios will be categorized as:

- those scenarios causing worst-case consequences from catastrophic vessel failure
- those scenarios causing worst-case consequences from a range of other events or situations in which HF is produced, used, stored, or transferred.

For the purposes of this study, the worst-case consequences of a release will be defined as the furthest distance at which there could be potentially lethal effects.

ED_002700_00005500-00157

9.4.3 Basis for Selecting Scenarios

Scenario development is process, situation, and site specific. The scenarios for this report include a range of worst-case conditions that may not be representative of any specific site. Consequently, these scenarios should be viewed as generic worst-case situations involving the release of HF. The inputs and release conditions can always be refined; however, the scenarios used to model consequences in this report provide a conservative range of conditions for approximating doses and potentially affected distances.

EPA first developed a list of potential release scenarios based on actual accident events, industry input concerning process areas considered most vulnerable to loss of containment, current industry practices for release prevention and mitigation, site visits and analyses of processes, and risk assessment/hazard evaluation information collected during the course of this study. The quantity of HF lost from containment and the resulting release to air are dependent on the mass flow of HF, the process and storage conditions, and whether anhydrous or aqueous HF is involved. For this analysis, all of the releases modeled involved leaks of liquid HF because liquid releases result in a higher mass flow rate than vapor releases.[48] The maximum quantity of HF released was based on the capacity of HF vessels at various types of facilities. Because anhydrous HF has a greater potential for vapor cloud formation than aqueous HF, all of the releases modeled involve anhydrous HF except for one large release of 70 percent HF.

Worst-case scenarios are also dependent on environmental conditions such as stability of the atmosphere, wind speed, humidity, roughness of the terrain, and the air and ground temperature. Worst-case environmental conditions were chosen based on estimates that would cause the greatest downwind exposure. The catastrophic vessel failures were only modeled with D stability because the models were not able to handle huge release rates together with the most conservative meteorological conditions associated with F atmospheric stability.

To address the worst-case scenario in the category of catastrophic vessel failure, a release of a large HF bulk storage vessel is modeled (Exhibit 9-3). This type of bulk storage vessel is typical of that at an HF production facility. Within this category of catastrophic vessel failure, a derailment of an HF rail car is also modeled. To compare the consequences of an anhydrous versus aqueous HF release, the derailment scenario is modeled first with anhydrous HF and then with 70 percent aqueous HF. For all of these catastrophic failures, release mitigation was not considered in the modeling because mitigation is generally considered not feasible or available for these releases. The probabilities of a major vessel rupture and other such catastrophic accidents are generally very low. This type of worst-case event (e.g., storage vessel splitting open, spilling the entire contents) is not unique to facilities handling HF, but could be evaluated for any facility that handles hazardous materials. Severe damage due to catastrophic vessel failure could occur with any of a number of highly toxic chemicals that are handled in bulk quantities, such as chlorine or ammonia.

To address the range of worst-case scenarios, several HF facility locations and situations were examined. The range of other worst-case scenarios that were modeled involve a diversity of HF operations, a variety of release conditions (e.g., high/low pressure) and a range of release rates (Exhibit 9-4). In addition, various scenarios were selected to reflect potential releases at different types of industries that use or handle HF (e.g., HF manufacturers, refineries, fluorocarbon producers). Several types of release events can be grouped and addressed in one scenario (e.g., pump seal failure, flange and gasket leaks, threaded connection or weld leaks) because of similar failure mechanisms and because the release might be of similar magnitude. The probability of the releases are difficult to determine other than to say that certain types of releases (e.g., pump seal failure, hose leak) are reported with some frequency in accident data.

ED_002700_00005500-00158

Exhibit 9-3
Catastrophic Vessel Failure Scenarios

Scenario Number	Scenario	Description	Atmospheric Stability	initial Flow Rate, kg/s	Total Quantity to Air, kg
1	Vessel Rupture-Bulk Storage	Empty vessel	D	1100*	1 ,800,000
2	Derailment	Empty rail car	D	77	65,000
3	Derailment 70 percent HF	Empty rail car	D	2.5**	3,000

*average pool evaporation rate from first 1,200 seconds (20 minutes).

**average pool evaporation rate from first 1 ,000 seconds; rate is the effective evaporation of anhydrous HF determined from the ratio of the partial pressures of anhydrous and 70 percent aqueous HF at 25°C.

Exhibit 9-4
Range of Other Scenarios

Scenario Number	Scenario	Description	Atmospheric Stability	Initial Flow Rate, kg/s	Total Quantity to Air, kg
4	Hose Failure	Empty tank truck	F	43	18,700
5	Hose Failure (mitigated with automatic shutoff valves)	One minute release	F	43	2,600
6	Hose Failure	Empty tank truck	D	43	18,700
7	Hose Failure (mitigated with automatic shutoff valves)	One minute release	D	43	2,600
8	Settler Leak-Bottom	Empty settler	F	50	27,000
9	Settler Leak-Bottom	Empty settler	D	50	27,000
10	Settler Leak-Bottom (mitigated with water sprays)	90% flow reduction	D	4.9	2,700
11	Vessel Leak	Nearly empty vessel	D	12	14,900
12	Vessel Leak (mitigated with emergency de-inventory)	3 minute release	D	12	2,200
13	Settler Leak-Inlet Pipe	20 minute release	F	9.5	11,400
14	Settler Leak-Inlet Pipe	20 minute release	D	9.5	11,400
15	Pump Seal Failure	20 minute release	F	2	2,200
16	Pump Seal Failure	20 minute release	D	2	2,200

ED_002700_00005500-00159

The consequences from these other release scenarios can be reduced by implementing different mitigative measures. For example, some facilities attempt to decrease the rate of the release with water sprays and others attempt to reduce the duration of a release with emergency de-inventory or remotely activated valves. To evaluate the effectiveness of these methods for reducing the HF dose downwind, several scenarios were modeled to incorporate these mitigative measures.

Consequences estimated for these releases depend not only on the conditions but the number of people that might be exposed. For example, a worst-case release probably would have little impact on public health in a sparsely populated area, while a release in a densely populated area, under conditions not considered worst-case, might have a greater potential for harming the public. A site-specific characterization of the population around a facility would be necessary for evaluating the potential impact of a release on the public. Appendix XV presents a sample characterization of the populations around selected facilities that manufacture or use anhydrous HF.

It is important to emphasize that the scenarios described here are meant to illustrate possible accidental release events and the role that industry practices (or lack thereof) might play in quickly detecting, mitigating, and responding to such events. For each scenario, the furthest distance is determined at which an HF dose based on **IDLH** is reached. The actual **risk** of fatality or other serious health effects to populations surrounding facilities that handle HF, or any other hazardous substance, depends on a site-specific analysis of the likelihood that a release will occur, the magnitude and severity of a release, the site-specific meteorologic conditions, and the level of exposure the public might receive. The modeling analysis based on the scenarios presented does not assess or estimate public risk but rather provides an indication of the severity of effects and potential doses that could result from an accidental HF release.

The scenarios used for the modeling are described in detail below.

9.5 Descriptions of Scenarios Used in HF Study

Except when indicated, all of the scenarios are modeled assuming the released HF becomes airborne. This means that all of the HF flashes to vapor or **part** of it flashes and the rest aerosolizes so that no liquid pools or rains out after the release. Two scenarios, one involving an anhydrous release from a vessel rupture and another involving a release of 70 percent aqueous HF from a derailment, are assumed to form evaporating pools.

9.5.1 Catastrophic Vessel Failure

The following descriptions cover the scenarios in the category of catastrophic vessel failure. These types of scenarios are extremely unlikely. The releases from catastrophic vessel failures are expected to last for many hours and have large impacts downwind. It is unrealistic to assume that during the several hours that the plume travels, the wind speed and direction would remain constant, In fact, wind speed and wind direction would not be expected to remain constant beyond the time it takes the plume to pass about **10** kilometers. The models were not able to change wind speed or wind direction during the course of one release. Consequently, it was assumed that the modeling results would not be accurate past 10 kilometers. If during D atmospheric stability, a catastrophic vessel failure resulted in an HF cloud that passed or came close to **10** kilometers, then the same scenario was not modeled with F atmospheric stability. The most conservative meteorological conditions associated with F stability was not modeled because the HF plume would be expected to go much further than 10 kilometers.

Accident Scenario 1 - Catastrophic Failure of Bulk HF Storage Vessel

ED_002700_00005500-00160

In this scenario, which may only be applicable to the manufacturers of HF that maintain bulk storage of HF, a 500,000 gallon HF storage sphere ruptures. In 10 minutes, the entire contents spills onto the ground and begins to evaporate. The release duration is chosen based on the EPA Green Book's description of a release with "credible worst-case assumptions." In reality, a catastrophic failure of a bulk HF storage vessel would likely result in a fraction of the HF flashing, forming a vapor-aerosol cloud, and the remainder forming a pool from which HF would evaporate. The hole size for the catastrophic failure of the HF sphere is based on the hole size that would release all of the HF in 10 minutes. HF evaporates from the pool at an average rate of about 18,000 gallons per minute (1,100 kilograms per second) over a 20 minute period. In such a catastrophic release, nothing is currently available to stop the release to the air or to contain the spreading pool. Because of the large size of the spill, the release is modeled as an evaporating pool at D stability.

Accident Scenario 2 - Derailment of Rail Car Containing Anhydrous HF

A rail car containing anhydrous HF derails in a rural area. The rail car is punctured: HF spills from a six inch diameter hole. The hole size was based on the puncturing of a tank car by a rail. Because of the isolated location of the derailment, no mitigation could be applied. The rail car empties in 14 minutes at an initial rate of 1,250 gallons per minute (77 kilograms per second). This scenario represents a very large release under pressure and temperature close to ambient (pressure 22 psi and temperature 27°C). The release was modeled assuming D atmospheric stability class conditions.

Although the accident databases did not specifically indicate derailment as an accident cause, one documented rail accident involved a failed weld on a pressurized tank car. About 2,900 kilograms of HF were released. In this worst-case scenario, a rail car was emptied, spilling about 65,000 kilograms.

Accident Scenario 3 - Derailment of Rail Car Containing 70 Percent HF

A rail car carrying 70 percent HF derails in a rural area. Like scenario 2, the rail car is derailed and punctured, and HF spills from a six inch diameter hole. Because of the isolated location of the derailment, no mitigation could be applied. The rail car empties at an initial rate of 1,850 gallons per minute (115 kilograms per second). The release lasts for about 20 minutes. A liquid pool forms at the site and HF begins to evaporate at a rate characteristic of a 70 percent HF solution,

This scenario is modeled as evaporation from a liquid pool. This scenario represents a very large release under pressure and temperature close to ambient (pressure 22 psi and temperature 27%). The release was modeled assuming D atmospheric stability class conditions.

9.5.2 Range of Other Scenarios

The following descriptions cover a range of other scenarios based on a diversity of HF operations, a variety of release conditions (e.g., high/low pressure) and a range of release rates.

Accident Scenario 4 - Transfer Hose Failure (F Stability)

This scenario applies to nearly all HF industry segments where HF is transferred to or from transport or storage vessels (e.g., HF manufacture, petroleum refineries, fluorocarbon manufacturers). Many industry representatives consider the loading/unloading operation to be particularly hazardous because large quantities of HF are moved from one vessel to another using hoses and temporary connections. This scenario also may be representative of a piping failure.

ED_002700_00005500-00161

Both loading and unloading operations via pumping and under nitrogen pressure were considered; however, because loading/unloading under nitrogen requires higher pressures than pumping, the release flow rate from this unloading/loading method would be greater. The selected pressure for modeling a release during loading/unloading was based on facility information provided to the South Coast Air Quality Management District.[49,50]

This scenario depicts the failure of the flexible hose used to transfer liquid anhydrous HF to or from a tank truck. The HF transfer rate is assumed to be about 680 gallons per minute (48 kilograms per second) under nitrogen pressure.[51] The hose suddenly splits open and liquid HF is released at the same rate as the transfer. (A hose failure would more likely begin with a small leak and if ignored, it might expand catastrophically.) The HF liquid vaporizes and aerosolizes, forming a cloud that begins to drift downwind.[52] A liquid pool may also form. It is assumed that the release is not discovered in time to stop the flow of HF, and the tank truck empties in just over seven minutes. The transfer hose failure was modeled assuming that all of the released HF becomes airborne. The release was modeled assuming F atmospheric stability class conditions.

Accident Scenario 5 - Mitigated Hose Failure (F Stability)

Some facilities that use HF are equipped with automatic shutoff valves and shutdown switches to mitigate the release from a hose failure. This scenario assumes that in less than a minute, HF sensors, tank truck drivers or standby operators who monitor the HF transfer will observe the release and shutdown transfer operations by activating emergency remote shutoff valves and/or turning off pumps. An area or plant alarm will be sounded, initiating response actions.[53] Assuming that the leak is quickly identified and valves on either end of the hose are quickly closed, approximately 680 gallons of HF are released.

The transfer hose failure was modeled assuming a one minute release where all of the released HF becomes airborne. The release rate, 680 gallons per minute (43 kilograms per second), is the same as that in scenario 4. This means that before the leak is isolated with automatic shutoff valves, all of the HF flashes to vapor or part of it flashes and the remainder aerosolizes so that no liquid is remaining after one minute. For processes involving HF, this scenario represents a release under moderate pressure (95 psi). The release was modeled assuming F atmospheric stability class conditions.

Accident Scenario 6 - Transfer Hose Failure (D Stability)

This accident is the same as scenario 4 except the release was modeled assuming D atmospheric stability class conditions.

Many HF hose failures appear in the accident history, including a go-kilogram release when a transfer pipe between two tanks corroded, and a 58-kilogram discharge when a line split during pumping. Such releases did not involve the complete hose failure as do the worst-case scenarios modeled here, in which 18,000 kilograms (scenarios 4 and 6) of HF are released.

Accident Scenario 7 - Mitigated Hose Failure (D Stability)

This accident is the same as scenario 5 except the release was modeled assuming D atmospheric stability class conditions.

ED_002700_00005500-00162

Accident Scenario 8 - Settler Leak-bottom (F Stability)

This scenario could occur at a petroleum refinery with an HF alkylation unit. During operations of the alkylation unit, the settler vessel separating HF from hydrocarbons develops a two inch diameter hole below the HF liquid level. The HF flows from a hole at the bottom of the settler at about 800 gallons per minute (50 kilograms per second). The facility is not equipped with mitigation equipment. The alkylation process is stopped, however, the HF continues to flash and aerosolize from the settler. The HF is drained from the settler in nine minutes.

The settler leak-bottom was modeled assuming that all of the released HF becomes airborne. This means that all of the HF flashes to vapor or part of it flashes and the reminder aerosolizes so that no liquid is remaining after the release. For processes involving HF, this scenario represents a release under moderate pressure (125 psi) and temperature (40°C). The release was modeled assuming F atmospheric stability class conditions.

A similar accident occurred at a refinery, when the bleeder valve on an acid tank opened, releasing 725 kilograms of HF. This is a much smaller amount than was released in the worst-case scenario modeled here, where a settler completely empties, spilling 26,000 kilograms of HF.

Accident Scenario 9 - Settler Leak-bottom (D Stability)

This accident is the same as scenario 8 except the release was modeled assuming D atmospheric stability class conditions.

Accident Scenario 10 - Mitigated Settler Leak-bottom (D Stability)

A facility that experiences the release in scenario 9 applies water sprays almost immediately to the release. Based on the high flows of the water sprays, it is assumed that the air release was reduced by 90 percent. For simplicity, the 90 percent reduction of the air release was modeled as a 90 percent reduction of the initial flow in scenario 9. The release was stopped in nine minutes and was modeled assuming D atmospheric stability class conditions.

Accident Scenario 11 - Vessel Leak (D Stability)

This scenario is applicable to any facility that stores HF. HF begins to leak from a crack in a weld caused by corrosion or a defect in the bottom of a 5,000 gallon vessel. The crack is about 1/16th of an inch wide by 5 feet long." Since the leak is located below the liquid level, liquid HF begins to spill from the tank. Under worst-case conditions, all of the HF becomes vapor. The size of the vapor cloud is based entirely on the rate of HF release into the air. In this scenario, the amount of HF in storage determines the duration of the event.

At the release site, HF detectors are either not working or not installed. There are no video monitors and operators are attending to problems elsewhere in the unit. HF begins to leak unabated from the crack in the vessel. The release is eventually discovered after 5 minutes because of the significant vapor cloud. Area alarms are sounded, and response actions are initiated. The release continues for a total of 20 minutes at about 195 gallons per minute (12 kilograms per second) until the vessel is nearly empty.

The effective diameter of the vessel crack area is based on information supplied by Du Pont on a permit application to the Texas Air Control **Board.**[55] The vessel leak was modeled assuming that all of the released HF becomes airborne. This means that all or some part of the HF flashes to vapor and the remainder aerosolizes so that no liquid remains. Realistically, depending on ambient

ED_002700_00005500-00163

conditions and the conditions of the release, a liquid pool could form during this event that, over time, would eventually evaporate and form a cloud which would travel downwind. This scenario represents a release under pressure and temperature close to ambient (pressure 22 psi and temperature 27°C). The release was modeled assuming D atmospheric stability class conditions.

Vessel leaks appear frequently in the accident history as a cause of HF releases; an example is the 600 kilogram release of anhydrous HF due to a corroded pressure gauge. This release was much smaller than this worst-case scenario, which is based on a 5,000-gallon vessel which spills about 3,900 gallons (14,400 kilograms) of its contents.

Accident Scenario 12 - Mitigated Vessel Leak (D Stability)

Upon discovery of the release in scenario 11, the operators begin an emergency de-inventory operation on the cracked vessel. Within three minutes, the total remaining content of the failed vessel is dumped to a spare vessel, stopping the release. The leak is modeled similarly to scenario 11 except that the release duration is three minutes.

Accident Scenario 13 - Settler Leak-Inlet Pipe (F Stability)

This scenario could occur at a petroleum refinery with an HF alkylation unit. During operations of the alkylation unit, the inlet pipe to the acid settler develops a one inch diameter hole. The liquid in the pipe is approximately 50 percent HF and 50 percent hydrocarbons. The total HF/hydrocarbon leak rate is initially 300 gallons per minute (19 kilograms per second). In this scenario, the HF/hydrocarbon mixture does not ignite. Ignition of the mixture could decrease off-site consequences as a result of combustion and of increased HF dispersion from thermal effects.

This scenario was modeled with an effective diameter to produce an HF initial flow rate of 150 gallons per minute (9.5 kilograms per second), roughly half the combined flow of HF and the hydrocarbons. The release duration is approximately 20 minutes. Model inputs were based on SCAQMD data which was provided by HF facilities. For processes involving HF, this scenario represents a release under high pressure (235 psi) and moderate temperature (40°C). The release was modeled assuming F atmospheric stability class conditions.

Accident Scenario 14 - Settler Leak-Inlet Pipe (D Stability)

This accident is the same as scenario 13 except the release was modeled assuming D atmospheric stability class conditions.

Accident Scenario 15 - Pump Seal Release (F Stability)

In HF processes, pumps may be used to transfer HF for loading and unloading trucks and tank cars, to circulate acid in alkylation units, and to feed HF raw material to other processes (e.g., fluorocarbon manufacturing). Pump seal failure is a possible cause of HF releases. In operations using aqueous HF, the corrosive nature of the acid may contribute to the breakdown of the seal.

The release rate of HF from a pump seal failure varies depending upon the initial conditions (i.e., phase, flow rate, pressure, temperature). One estimate&laces the release rate at 10 to 100 gallons per minute for a pump seal failure in an HF process. Depending on the initial conditions, HF can be released as a vapor, aerosol or liquid. A small leak can be detected by vapors emanating from the pump seal. One refinery using HF alkylation estimated that a seal failure on a pump which has a shaft diameter of 1.5 inches (clearance of 0.02 inches) would yield a release rate of about 20 gallons per minute at a typical operating pressure of 125 psi.[57]

ED_002700_00005500-00164

In this worst-case scenario, a pump seal in an alkylation unit leaks at an average rate of 29 gallons per minute (about 2 kilograms per second). The HF detector fails to respond or no HF detector is present and the unit operator is checking on a problem elsewhere in the unit. A mechanic at the change room notices fumes near the pump and calls the central control room. The control room operator radios the unit operator to check the pump. The operator confirms the leak and tells the control room operator to shut down the pump and sound the unit alarm. The pump is shut off, but there are no remotely-activated valves, consequently, HF continues to leak until valves can be closed manually. Response actions are initiated. Responders don personal protective equipment to enter the process area to close valves and stop the leak. After 20 minutes, the valves on the pump are finally closed and the leak is stopped. Approximately 580 gallons of HF are released.

Given the pump pressure and the relatively small clearance of the leak, it is likely that the released HF would be sprayed into droplets and mixed with the air. Consequently, for this worst-case scenario, the pump seal failure was modeled assuming that all of the released HF becomes airborne. The release is assumed to last 20 minutes, Depending on the nature of the spill, if mitigation such as water sprays were quickly applied to the spill, the downwind concentrations could be considerably reduced. However, mitigation measures were not considered in this scenario. For processes involving HF, this scenario represents a release under moderate pressure (125 psi) and temperature (40%). This release was modeled assuming F atmospheric stability class conditions.

Accident Scenario 18 - Pump Seal Failure (D Stability)

This accident is the same as scenario 15 except the release was modeled assuming D atmospheric stability class conditions.

A pump seal failure at a refinery HF alkylation unit occurred, in which 68 kilograms of HF were released. Although worst-case scenarios 15 and 16 were based on a system with moderate pressure and temperature, the amount released, 2,200 kilograms, is significantly higher.

The specific inputs for each of the above scenarios for HGSYSTEM and **SLAB** are provided in Appendix XVII.

9.6 Limitations of the Modeling Results

The modeling results for the above scenarios should be examined in light of several limitations or difficulties in developing worst-case scenarios and in modeling the scenarios.

9.6.1 Limitations of the Worst-Case Scenarios

The scenarios considered in this report are generic and not site specific. Process conditions (e.g., temperature, pressure), the effectiveness of any mitigation systems, and the HF inventories will vary from facility to facility. Therefore, it is unlikely that the specific combination of worst-case conditions used in these cases would be experienced in a release at a specific site. In defining and developing the worst-case scenarios, EPA acknowledges that the scenarios may be extremely conservative. Actual releases would most likely result in lower flow rates and shorter durations than assumed in the worst-case scenarios.

In some cases, simplifying assumptions were made to accommodate the dispersion models used. For example, the flow rate was assumed to remain constant at the initial flow rate until the

ED_002700_00005500-00165

vessel was emptied even though a variable emission rate is consistent with fluid dynamics, The impact of this assumption is evaluated in the sensitivity analyses later in this chapter.

The worst-case scenarios did not include certain scenarios, such as releases from refrigerated HF storage where the vaporization rate would be expected to be significantly less. In addition, certain facility situations were not covered, such as modeling cases where a combination of mitigative measures (e.g., automatic shutoff and water sprays) are used. The choice of a rural surface roughness value also does not reflect the structures typically found at a facility.

Finally, the likelihood of the releases was not quantified in any of the different scenarios modeled. The probability of an accidental release is critical in evaluating risk to facility employees and the public. Consequently, the results presented here are only useful in comparing the relative potential severity in terms of concentration, distance, and dose for a variety of release scenarios including worst-case.

9.6.2 Limitations of the Models

It is fortunate for this study that a comprehensive model, HGSYSTEM, has been specifically tailored to the complexities of HF releases. SLAB also has been shown to effectively reproduce experimental spill data of HF releases[58] However, these models cannot incorporate all of the complexities of the release, dispersion, and chemical interactions associated with a spill event. Each model has its own limitations. **SLAB** does not account for the association/dissociation of HF in air or the reaction of HF with water vapor. HGSYSTEM makes the simplifying assumption that if any HF flashes (flashing is temperature and pressure dependent), then all of the HF will aerosolize and vaporize. This is a worst-case assumption which may not reflect cooling factors and other complex atmospheric reactions occurring during a release.

The model algorithms are based primarily on a theoretical understanding of the concepts of release and dispersion. However, some of the model parameters are derived from small-scale laboratory experiments. The models must account for a wide range of release conditions and the interaction of complex factors (e.g., effect of humidity and molecular disassociation on gas density). The purpose of field tests is to evaluate and validate the models and to better understand the influence of complex chemical reactions and thermodynamic effects during a full-scale release. However, the validity of HGSYSTEM and SLAB models may be largely untested, because there are few HF field tests to date, and the tests that do exist do not reflect a wide range of release conditions. Some algorithms and assumptions contained in the models cannot be adequately evaluated with currently available field test data. For example, in the Goldfish spill tests, HF was released only at a temperature of 40°C and pressures between 110 to 120 psi, which are conditions approximating petroleum refinery HF alkylation unit operating parameters, The rates of release in the Goldfish tests were 10 to 30 kilograms/second for a total release quantity of approximately 3,600 kilograms. Both HGSYSTEM and SLAB have been validated with downwind HF concentrations from such a release. Both models agree with the field data; however, other release conditions that are typical of other possible release scenarios (e.g., hose transfer failure, catastrophic vessel failure) have yet to be validated.

The scenarios in this study were developed to include a range of release conditions that represented worst-case releases. For most of these scenarios, the models have not been validated with field data specific for HF releases. Of the scenarios modeled in this study, only scenarios 8, 9, 15, and 16 simulate the temperature and pressure conditions of the Goldfish tests. Only scenarios 3, 11, 12, 13, and 14 are within the range of release rates in the Goldfish tests. In fact, scenario 1 - catastrophic failure of a bulk storage vessel - assumes release of a quantity at least 40 times greater than the largest release quantity in a field trial. Also, none of the field trials were conducted under the

ED_002700_00005500-00166

most conservative atmospheric conditions of stability F, which is specified in scenarios 4, *5, 8,* 13, and 15. The Goldfish desert conditions of extremely low surface roughness, high temperatures, and low relative humidity are not often reflected in sites where HF is produced, used, or stored. Also, because field data on concentration were collected no further than about 3 kilometers from the release, the results of modeling the scenarios in this study are outside the range of available empirical data.

For large releases, both models estimate that several hours would elapse before the HF cloud reaches the distance at which the **IDLH** is reached. It is unrealistic to assume that during the several hours that the plume travels, the wind speed and direction would remain constant. In fact, wind speed and wind direction would not be expected to remain constant beyond the time it takes the plume to pass about 10 kilometers. The models were not able to accommodate changes to wind speed or wind direction during the course of one release. Consequently, it was assumed that the modeling results would not be accurate past 10 kilometers. In the scenarios where the release passed or came close to 10 kilometers during D stability (e.g., catastrophic vessel failure), the release scenario using F stability was not modeled because the HF plume would be expected to go much further than 10 kilometers.

In some cases, however, simplifying assumptions used in the modeling may give rise to less conservative estimates. In the mitigation scenarios with water sprays, the percent reduction in flow is assumed to start at the beginning of the release. However, this does not account for the unmitigated flow during the time prior to the initiation of the water sprays. Also, the models may not calculate accurate dose estimates in situations when the release duration is shorter than the exposure averaging time. In these situations, an individual will not be exposed to the cloud for the full averaging time and therefore the models will be left to average in some zero concentrations into the dose calculations. Consequently, exposure averaging times of 60 minutes for ERPG-3 will have to average in more zero concentrations than shorter averaging times of 30 minutes for IDLH. This may make distances to ERPG-3 somewhat less accurate than distances to **IDLH.**

In running the catastrophic vessel failure scenarios, the models are being pushed to the limits of their capability to estimate concentrations and downwind distances. Several data field ranges built into the HGSYSTEM model (e.g., rate, hole size, vessel capacity) had to be expanded to account for the more extreme inputs from these catastrophic vessel failures. Because of the long dispersion times associated with releases from catastrophic vessel failures during which time wind speed and direction are uncertain beyond 10 kilometers, these catastrophic releases were only modeled with D stability.

9.8.3 Impact of the Limitations on the Results

As mentioned above, many assumptions and estimates were made when determining the various inputs for modeling the accident scenarios. In evaluating the results, therefore, it is important not to attach too much significance to precise numerical results. Two different dispersion models were used for comparison of results.

Because of the uncertainties in the models and in the unlikelihood that wind speed and direction will last several hours for significant distances, the modeling results are presented as distances up to a maximum of 10 kilometers. Greater distances are expressed simply as greater than 10 kilometers. Also, the distances are approximated to the nearest one-half kilometer. The distances for all of the scenarios are based on the IDLH. Only a few select scenarios are modeled using the ERPG-3 exposure level. Caution should be used in interpreting the distances to the exposure levels,

9.7 Results and Analysis

ED_002700_00005500-00167

This section compares the results obtained for different types of release scenarios, models, and mitigation options for reducing release consequences. The results are first discussed generally and then evaluated as they pertain to catastrophic vessel failure and to a range of other scenarios. The data are presented as distances to the **IDLH** (30 ppm for 30 minutes) or the **ERPG-3** (50 ppm for 60 minutes). Estimates of the area covered by the resultant plume are also given for several scenarios. **Exhibit** 9-5 shows the modeling results for catastrophic vessel failures using the HGSYSTEM and **SLAB** models. Exhibit 9-6 shows the modeling results for the range of other scenarios using the same two models.

9.7.1 General Discussion of Results

Distances to Exposure Level. The calculated distances to **IDLH** for various scenarios suggest that an HF release can pose a hazard far beyond facility boundaries. The modeling results indicate that for many worst-case scenarios, HF has the potential to travel into populated areas. HF can aerosolize, form a dense gas cloud, and the plume can remain largely intact over substantial distances. This should be of concern to facilities that manage HF and to local communities that need to develop emergency plans for possible HF releases. Distances to ERPG3, although somewhat shorter than distances to IDLH, could be sufficient to pose a hazard to the public around many HF facilities. However, it should be noted that for emergency response planning, distances of concern should be estimated using site-specific analyses.

The **SLAB** model also provided information on maximum width of the plume which has reached the furthest distance to a specific dose threshold. For example, in the mitigated hose failure at F stability level (Scenario **5),** the plume spread to a maximum width of about 700 meters. When D stability level was assumed (Scenario **7),** the maximum plume width was only 150 meters. HGSYSTEM also can be used to determine plume widths at various concentrations of interest; this capability was not examined for this study. Factors that influence the width of an HF plume are concentration at centerline, horizontal (or crosswind) wind speed, stability class, and averaging time.[59]

Area of Plume. The area covered by a cloud may be a more important indicator of the extent of potential consequences of a release than the distance covered by the plume. Plume area which is a function of both the plume distance and width, will better describe the populations threatened by the release. Data on maximum plume width and distance (length) to the **IDLH** from SLAB runs were analyzed to estimate the area of the plume created by a release. An elliptical shape was assumed to approximate the area covered by the HF cloud, defined as pie times half the width times half the length of the cloud. Plume areas were not calculated for releases that extended beyond 10 kilometers, because it is unrealistic to assume that the wind speed and direction remain constant beyond the time it takes the HF plume to pass 10 kilometers. Exhibits 9-5 and 9-6 show that the affected areas range from 0.1 to 6.5 square kilometers, The area of a cloud is amplified when the extent of the plume increases. For example, in comparing scenario 12 to scenario 14, the distance to the **IDLH** is doubled, whereas the area is quadrupled. The plume width varied in these scenarios from about 8 to 12 percent of the plume length. The dispersion data indicated that the location of the maximum plume width at the **IDLH** was not always midway between the release location and maximum distance to IDLH.

ED_002700_00005500-00168

Exhibit 9-5
Modeling Results of Catastrophic Vessel Failures

Scenario Number	Scenarios	HGSYSTEM Distance to IDLH (km)	SLAB Distance to IDLH (km)	HGSYSTEM Distance to ERPG-3 (km)	Area of Plume** (sq. km)
1	Vessel Rupture-Bulk Storage D Stability, Empty Vessel	>10	>10	*	
2	Derailment Anhydrous HF D Stability, Empty rail car	9.5	9	5.5	6.5
3	Derailment 70% Aqueous HF D Stability, Empty rail car	1.5	1.5	*	0.2

*Distance to ERPG-3 was not predicted for this scenario.
**Area is calculated to nearest square kilometer, based on SLAB width and distance to IDLH.

Comparison of the Models. Overall, the results of the HGSYSTEM and SLAB models paralleled each other. From scenario to scenario, the two models estimated distances that were consistent. In all scenarios but one, HGSYSTEM predicted greatest distances to the IDLH than did the SLAB model. In Scenario 11, the vessel leak, the SLAB model had a distance to IDLH that was approximately ten percent higher than that for HGSYSTEM. This is within the expected uncertainty of the accuracy of the results. The slightly longer distances estimated using HGSYSTEM may be due to the particular HF thermodynamic considerations (e.g., polymerization) in the HGSYSTEM model that tend to emphasize the dense and cohesive characteristics of the HF cloud. The HGSYSTEM model also incorporates more inputs than the SLAB model, which can help to further describe or account for the factors that influence HF dispersion.

Effects of Atmospheric Stability Category and Wind Speed. Meteorological conditions during a release can dramatically affect the potential hazards. Both F stability (at 1.5 meters per second wind speed) and D stability (at 5 meters per second wind speed) were assumed in five release scenarios (i.e., hose failure, mitigated hose failure, settler leak-bottom, settler leak-inlet pipe, and pump seal failure). The stability input greatly affected the results. Distances estimated for most of the scenarios where F stability was assumed to exceed 10 kilometers. Alternatively, results for scenarios using D stability, which indicates more turbulent, less stable atmospheric conditions, indicated significantly shorter distances to the IDLH. Under these conditions, the HF dispersed rapidly. The distances for scenarios with D stability were up to 87 percent less than the distances estimated using F stability conditions.

Some assumptions about meteorological conditions may be overly conservative for the purposes of emergency planning. Because F stability conditions typically exist only at calm, pre-dawn hours, however industry recommends that HF unloading/loading operations (scenarios 4 and 5) take place during daylight hours when F stability is rare.[60]

Effects of Flow Rate. The scenarios with the highest initial HF release rates -- vessel rupture, derailment, hose failure, settler leak-bottom, vessel leak, and settler leak-inlet pipe -- resulted in the greatest distances to IDLH. Scenarios 15 and 16 (pump seal failure) had the smallest initial flow rate, and also had the smallest distance to IDLH. These results indicate that release rate is a critical factor contributing to the distance an HF cloud can travel. More frequent industry testing (e.g., corrosion or

ED_002700_00005500-00169

structural testing) on large volume or large flow equipment should help to reduce the potential process points where large flow releases could occur. If release rate could be minimized, the consequences of a release could potentially be reduced.

Exhibit 9-6
Modeling Results of a Range of Other Scenarios

Scenario Number	Scenario	HGSYSTEM Distance to IDLH (km)	SLAB Distance to IDLH (km)	HGSYSTEM Distance to ERPG-3 (km)	Area of Plume** (sq.km)
4	Hose Failure F Stability, Empty tank	>10	>10	>10	
5	Hose Failure (mitigated with automatic shutoff valves) F Stability, 1 minute release	>10	8	6.5	5.4
6	Hose Failure D Stability, Empty tank	5	4.5	3	1.5
7	Hose Failure (mitigated with automatic shutoff valves) D Stability, 1 minute release	3	1.5	*	0.1
8	Settler Leak-Bottom F Stability	>10	>10	*	
9	Settler Leak-Bottom D Stability	6	5.5	*	1.9
10	Settler Leak-Bottom (mitigated with water sprays) D Stability	2.5	1.5	*	0.1
11	Vessel Leak D Stability, Nearly Empty Vessel	3.5	4	*	1.4
12	Vessel Leak (mitigated with emergency de-inventory) D Stability, Nearly Empty Vessel	1.5	1.5	*	0.2
13	Settler Leak-Inlet Pipe F Stability, 20 minute release	>10	>10	*	
14	Settler Leak-Inlet Pipe D Stability, 20 minute release	3	3	*	0.8
15	Pump Seal Failure F Stability, 20 minute release	9	7.5	*	3.8
16	Pump Seal Failure D Stability, 20 minute release	1.5	1	*	0.1

*Distance to ERPG-3 was not predicted for this scenario.
**Area is calculated to nearest 0.1

ED_002700_00005500-00170

9.7.2 Results from Catastrophic Vessel Failure

Distances and Areas to Exposure Level. Exhibit 9-5 shows that the distances to the **IDLH** for the catastrophic vessel failure scenarios examined from releases of anhydrous HF were at least nine kilometers. These results are especially noteworthy because the releases were modeled at D stability and at a wind speed of 5 meters per second, and not at the worst-case meteorology conditions of F stability and a wind speed of 1.5 meters per second. Even at the stronger wind speed at D stability, the distances would still be of serious concern to the public. At F stability, the distances to the **IDLH** from anhydrous HF releases from catastrophic vessel failure would be expected to be much larger than 10 kilometers. A sample area of a plume from a derailment involving an HF release is 6.5 square kilometers.

Anhydrous versus Aqueous Releases. Comparing the distances to **IDLH** from an anhydrous versus aqueous release required a modification to the HGSYSTEM model. HGSYSTEM has a program to calculate the spill rate and another program to calculate evaporation and dispersion. Based on the spill program, the anhydrous release is assumed to aerosolize completely and the 70 percent aqueous release is assumed to form a pool and begin to evaporate. However, for the aqueous release, the evaporation program assumes that the evaporating pool is anhydrous HF instead of 70 percent aqueous HF. Consequently, to simulate a 70 percent aqueous HF evaporating pool rather than an anhydrous HF evaporating pool, the evaporation rates generated by HGSYSTEM were reduced according to the ratio of the partial pressures of anhydrous HF and 70 percent aqueous HF.

The results show significant differences between a release from a derailment of a rail car containing anhydrous HF versus a release from a rail car containing 70 percent aqueous HF. Even though the amount of liquid spilled from the derailed rail car is similar for both scenarios, the amount of HF released to air is greater in the anhydrous case (65,000 kilograms in scenario 2) than in the 70 percent aqueous case (3,000 kilograms in scenario 3). This is due to the fact that HF in anhydrous form is assumed to evaporate completely when exposed to air, while HF in the aqueous phase will pool and then will evaporate at the rate of a diluted HF solution. The area covered by the anhydrous HF release in the derailment (scenario 2) is over 32 times greater than the area affected by 70 percent aqueous HF release in the derailment (scenario 3). This indicates the greater potential of anhydrous HF to release into air, and affect populations near a release site. However, the 1.5 kilometer distance and 0.2 square kilometer area from the aqueous release could still be cause for concern at some HF facilities.

Comparison with Other Chemicals. Based on results from the HGSYSTEM model, the concentrations of HF in a release from a catastrophic failure of a bulk storage vessel remain above 30 ppm for 30 minutes (IDLH) for more than 10 kilometers. This scenario, although extremely unlikely, would pose a serious hazard to the public surrounding the facility. However, a similar catastrophic release of another hazardous substance like chlorine would create a similar hazard. For the bulk vessel rupture (scenario 1), an HGSYSTEM run using chlorine rather than HF indicated that the chlorine cloud would reach the chlorine **IDLH** also at greater than 10 kilometers. Thus, considering the consequences of a catastrophic vessel failure of HF should include the acknowledgment that many other hazardous substances, if released catastrophically, may pose similar hazards to the public.

9.7.3 Results from a Range of Other Scenarios

Distances and Areas to Exposure Level. In most cases, modeling results for a range of other release scenarios (Exhibit 9-6) indicated that the distances to the **IDLH** are less than those from

ED_002700_00005500-00171

catastrophic vessel failure. However, the results show that HF would travel over large distances offsite. Generally, it appears that the rate of release is one of the more important factors influencing the distance to the exposure level.

These scenarios indicate a large range of affected areas, from 0.1 to 5.4 square kilometers. The differences in consequences due to atmospheric stability level can be seen by comparing the mitigated hose failure at F atmospheric stability (scenario 5) and the same mitigated hose failure at D atmospheric stability (scenario 7). The plume in scenario 5 reached five times the distance reached by the plume in scenario 7, and about eight times the width, and, as a result, covered approximately 50 times more area.

Effects of Mitigation. The mitigation systems examined in the modeling either reduced the flow rate of HF or reduced the duration of the release. The mitigation system employed in scenario 7 (i.e., hose failure) was automatic shutoff valves, which stopped the release in one minute. Compared with the unmitigated case (scenario 6), the distance to the IDLH using the shutoff valves would be reduced from 5 to 3 kilometers (using HGSYSTEM modeling results and D stability).

The mitigation system employed in scenario 10 (settler leak) was a water spray system, which reduced the effective HF release rate by 90 percent. Comparison with the unmitigated case (scenario 9) shows a distance reduction from 6 to 2.5 kilometers using HGSYSTEM. This is consistent with the general result mentioned above that a reduction in flow would greatly decrease the distance affected.

The mitigation system employed in scenario 12 (vessel leak) was an emergency de-inventory system which emptied the vessel and stopped the release in three minutes. Comparing resufts for this case with the unmitigated case (scenario 11) shows a distance reduction from 3.5 to 1.5 kilometers. A shorter duration greatly reduces the distance to the IDLH.

In all cases, mitigation reduced the distance to IDLH, thereby lessening the potential consequences of the accident. The magnitude of this reduction in distance ranged from 57 to 73 percent. It is not the intent to determine the relative effectiveness of different mitigation strategies. However, these results indicate a reduction of affected distances by using mitigation systems.

9.8 Sensitivity Analysis

Several parameters were varied to determine their influence on the modeling results. The parameters include stability and wind speed, emission rate, relative humidity, and surface roughness. The sensitivity analysis was based on either a release from an inlet pipe to an acid settler (scenario 14) or on a release from a hose failure (scenarios 4 and 5). For the HEGADAS model contained in HGSYSTEM, the results of the sensitivity analysis are summarized in Exhibits 9-7, 9-8, 9-9 and 9-10.

9.8.1 Wind Speed and Stability

Stability conditions are related to ranges of wind speeds. Generally, under more stable atmospheric conditions and lower wind speeds, higher concentrations are reached downwind. According to literature sources, downwind concentrations estimated using SLAB and HGSYSTEM exhibit varying sensitivities to changes in wind speed. The SLAB model is more sensitive to changes in wind speed.[61] The sensitivity analysis performed on HGSYSTEM shows that the choice of stability class in combination with wind speed has the largest affect on the downwind concentration of HF of any parameter considered. Exhibit 9-7 shows that the dose downwind for stability class F and 1.5 meters per second wind speed is far worse than the dose downwind for stability class D and 5.0 meters per second wind speed.

ED_002700_00005500-00172

9.8.2 Release Rate

The modeling results presented for HGSYSTEM and SLAB are based on a constant release rate. It was assumed that the rate of spill or vapor release remained constant at an initial release rate until the vessel was emptied. However, the actual rate of release from a vessel varies, The release rate would decrease over time due to the reduction of pressure in the vessel. SLAB can only handle a constant release rate. However, if the models contained in HGSYSTEM are run separately, it is possible to incorporate changes in release rate. The sensitivity analysis presented in Exhibit 9-8 shows the influence of constant and variable release rates on the dispersion of HF. This influence is presented for short (one minute) and long (seven minutes) duration releases from an unloading/loading hose. The exhibit shows that for either short or long durations, the simplifying assumption of constant release rates gives more conservative results than variable rates. Also, the difference between the distances due to constant and variable release rates are greatest for longer duration releases. For this study, it was determined that the simplifying assumption would not significantly affect the analysis since the results were being used for comparative purposes rather than focusing on the importance of a specific distance.

9.8.3 Relative Humidity

Changes in concentration due to changes in relative humidity are a result of thermodynamic reactions which alter cloud density. Relative humidity changes, therefore, alter dispersion by affecting both gravity spreading and vertical mixing. Exhibit 9-9 shows a complex relationship between concentration and relative humidity. At 10 percent humidity, there is little effect from heat generated by reaction between HF and water. At 50 percent humidity, the cloud is less dense in the early phases of dispersion and, thus, there is less gravity spreading and the plume is narrower. Exhibit 9-9 shows that, during the early stages of dispersion, the concentration with 50 percent humidity is close to, but slightly less than that for 10 percent. Because the top surface of the narrow plume is smaller, there is a smaller area for mixing to take place, and dilution slows. Thus, after approximately 1,000 meters downwind, the concentrations at 50 percent humidity become higher than those at 10 percent humidity. At 90 percent humidity, the heat of reaction enhances vertical mixing which results in lower concentrations.[62]

9.8.4 Surface Roughness

The overall effect of increasing surface roughness was to enhance the mixing between the plume and the environment, thereby decreasing HF concentrations. Exhibit 9-10 shows the effect of rural (0.03 meters) and urban (0.5 meters) surface roughness on HF concentration. The difference in concentration remains nearly constant as the cloud travels downwind. An almost 17-fold increase in surface roughness creates only a 1.5 factor decrease in HF average dose.[63]

ED_002700_00005500-00173

Exhibit 9-7
Sensitivity **Analysis** — Wind Speed and Stability

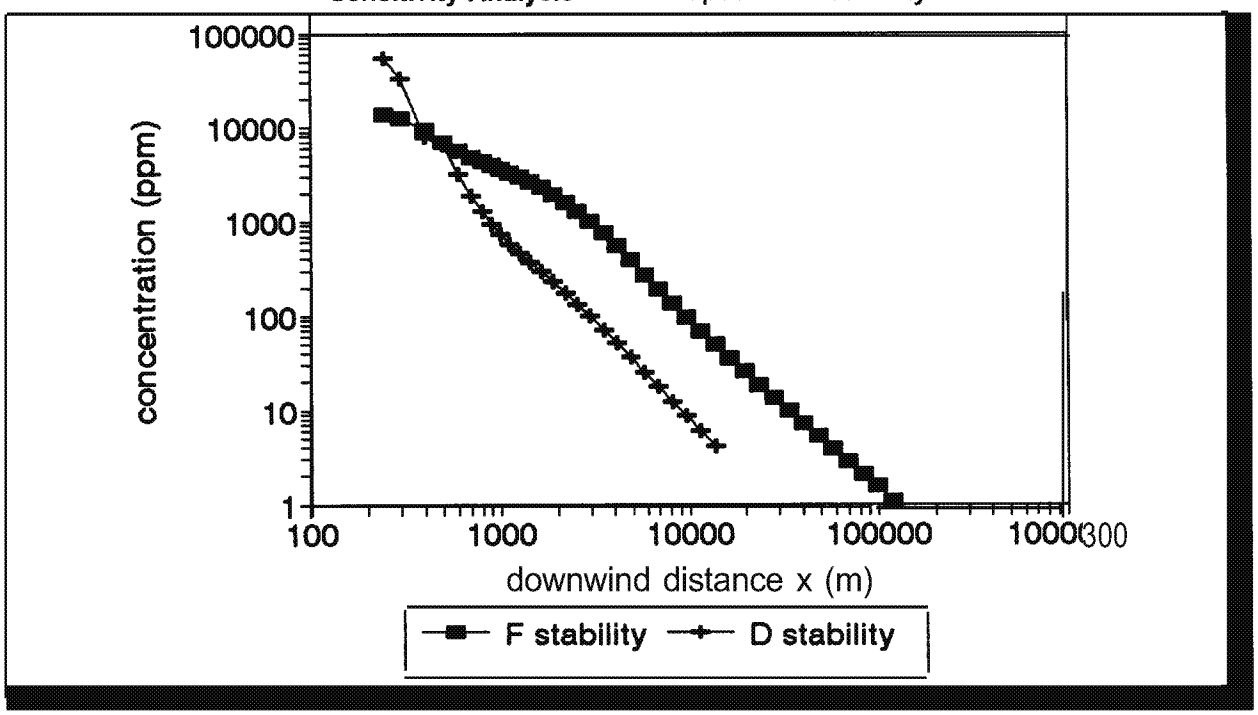

Exhibit 9-8
Sensitivity Analysis — Release Rate

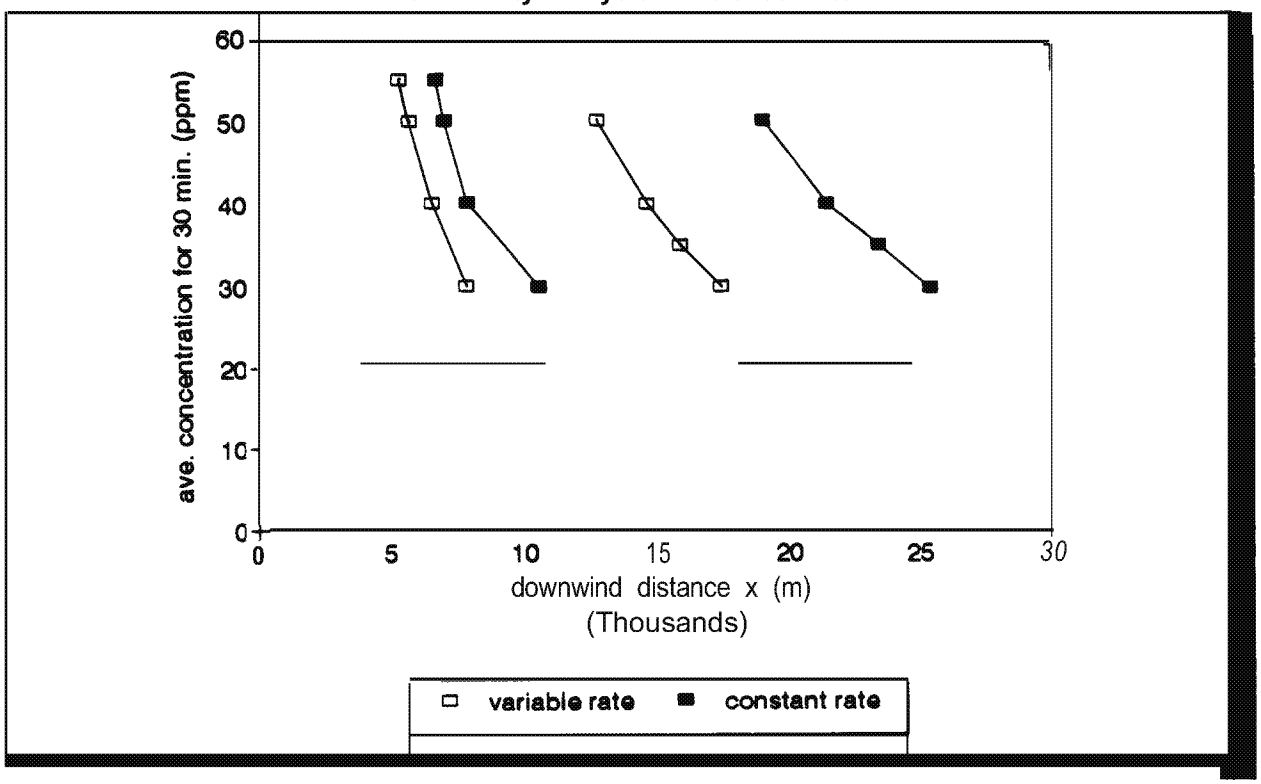

ED_002700_00005500-00174

Exhibit 9-9
Sensitivity Analysis — Relative Humidity

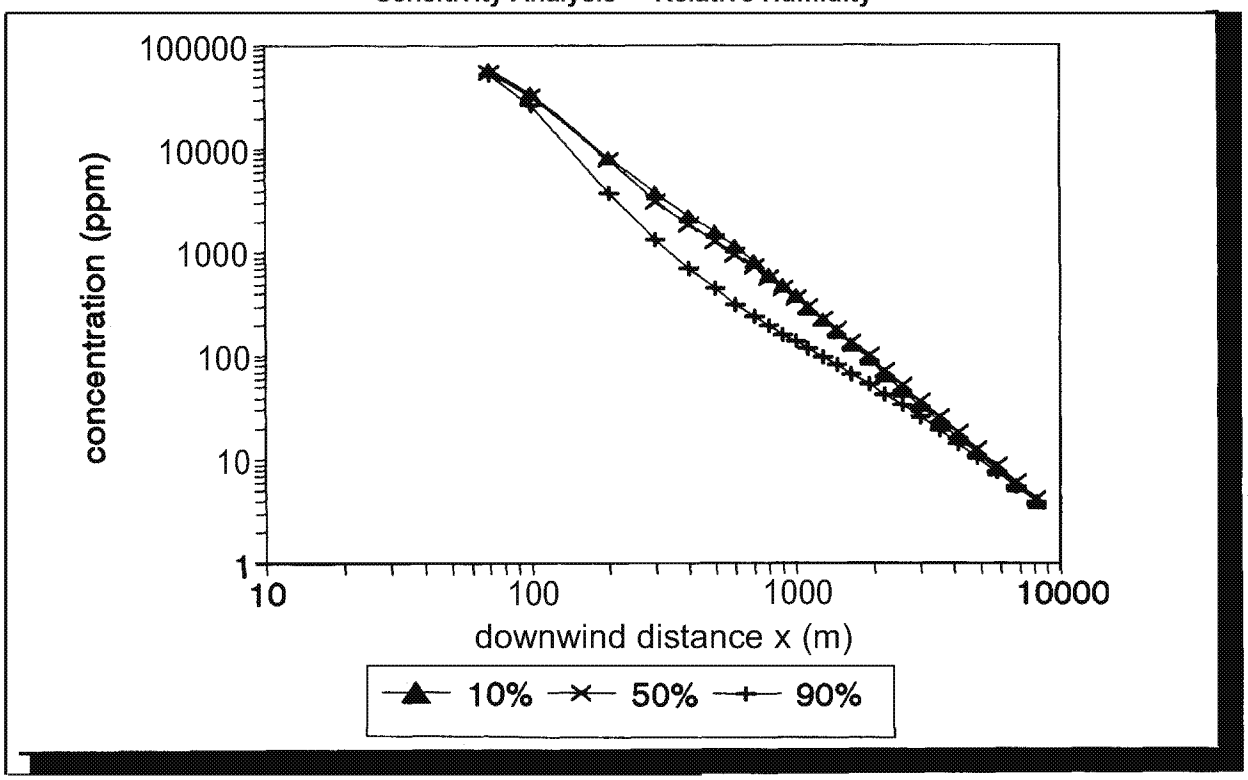

Exhibit 9-10
Sensitivity Analysis - Surface Roughness

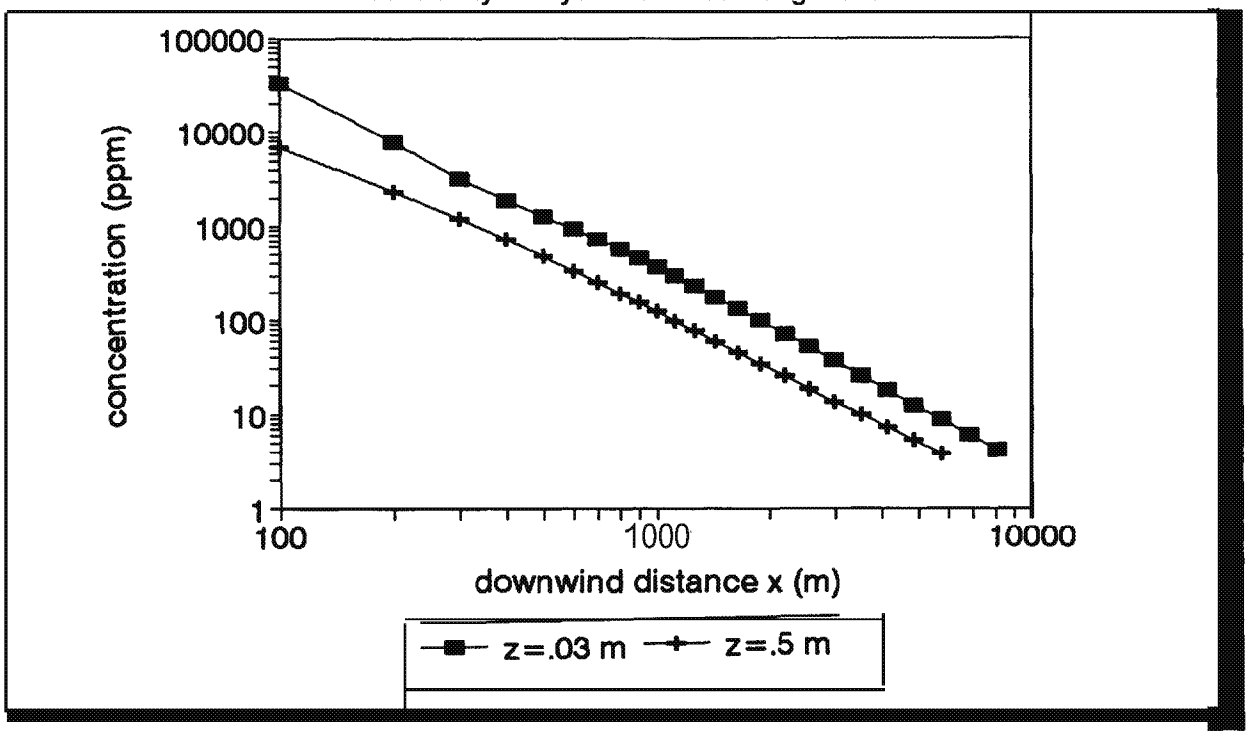

9.8.5 Combined Effect of Parameter Variation

To observe the aggregate effects of changes in stability level, relative humidity, and surface roughness, two variations of scenario 14, inlet pipe to an acid settler, were analyzed. The first variation was modeled using a combination of worst-case modeling conditions based on the sensitivity analysis presented above. The conditions included F atmospheric stability, 10 percent relative humidity, and rural surface roughness (0.03 m). The second variation was modeled using modeling conditions that increased HF dispersion, including D atmospheric stability, 90 percent relative humidity, and urban surface roughness (0.5 m). All other inputs remained the same. Modeling results showed that the combined effect of worst-case conditions on the maximum distance to the **IDLH** is significant. The HF plume in the worst-case modeling conditions of the first scenario traveled greater than 10 kilometers (calculated at 14 kilometers), compared to the plume in the second scenario, which reached slightly less than two kilometers. This seven-fold difference illustrates the dramatic effect on the resulting consequences.

9.9 Summary

This chapter examines the potential hazards of HF to the public by modeling a range of events including worst-case accidental releases. Computer models that can predict HF dispersion can be used to perform consequence analysis for accidental HF releases. Recent research efforts conducted to better understand HF dispersion have involved field tests and the development of several models. The capabilities of several dispersion models are discussed, including how the models address complex issues, such as averaging time and surface roughness. Sixteen HF release scenarios were selected for modeling, representing catastrophic releases (e.g., vessel rupture, **railcar** derailment) and a range of other release scenarios (e.g., pump seal failure, hose failure). Most scenarios involved releases of anhydrous HF. A few scenarios involved the use of mitigation measures which reduce the flow or duration of HF releases. These scenarios were chosen to illustrate possible accidental release events and the potential effects of mitigation. Some simplifying assumptions were made in defining the release scenarios. It should be emphasized that public risk, which would involve an analysis of the likelihood of release, was not examined in this study.

Two models were selected for use in the HF study--HGSYSTEM and **SLAB.** HGSYSTEM is a complex model that was developed especially for modeling HF releases. **SLAB** is designed to model dense gases. Both HGSYSTEM and **SLAB** make simplifying assumptions to model the complex release characteristics of HF. Inputs to the models were compiled from sources including studies by local and state governments, facilities that use HF, accident data, process design data and other modeling efforts.

Results were found in terms of maximum distance to **IDLH** and, for some scenarios, the maximum distance to ERPG-3. These results indicate the greatest distance from the release source at which a person may be exposed to an **IDLH** or **ERPG-3** dose of HF. Due to uncertainties in the modeling assumptions, the models may be inaccurate beyond about 10 kilometers; distances greater than 10 kilometers are noted as such. Results indicate that an HF plume can remain largely intact, and travel substantial distances from the release site. The catastrophic vessel failures of anhydrous HF resulted in distances at or near 10 kilometers. The affected distances of the range of other release scenarios depended largely on release rate, release duration, and atmospheric stability. In all scenarios for which mitigation was modeled (e.g., water sprays, emergency de-inventory, automatic shutoff valves), mitigation significantly reduced the distance to **IDLH,** lessening the potential consequences of the accident.

ED_002700_00005500-00176

The modeling analysis provides an indication of the severity of effects and potential doses that could result from an accidental HF release. This consequence analysis, however, is not a prediction of what will actually occur in a release. Actual size and behavior of an HF cloud will depend on site-specific conditions of site topography, process operating conditions, weather, mitigation measures, and response capability. Facilities that use HF should be concerned with possible hazards beyond facility boundaries and should estimate distances using site-specific conditions and analyses.

ED_002700_00005500-00177

ENDNOTES

1. Woodward, John, ed., *International Conference on Vapor Cloud Modeling, November 2-4, 1987, Boston Marriott Cambridge, Cambridge, MA,* American Institute of Chemical Engineers, Center for Chemical Process Safety, New York, 1987, "Conduct of Anhydrous Hydrofluoric Acid Spill Experiments," by Blewitt, D.N., J.F. Yohn, R.P. Koopman, and T.C. Brown. (60)

2. Woodward, John, ed., *International Conference on Vapor Cloud Modeling, November 2-4, 1987, Boston Marriott Cambridge, Cambridge, MA,* American Institute of Chemical Engineers, Center for Chemical Process Safety, New York, 1987, "Effectiveness of Water Sprays on Mitigating Anhydrous Hydrofluoric Acid Releases," by Blewitt, D.N., J.F. Yohn, R.P. Koopman, T.C. Brown, and W.J. Hague. (70)

3. Woodward, John, ed., *International Conference on Vapor Cloud Modeling, November 2-4, 7987, Boston Marriott Cambridge, Cambridge, MA,* American Institute of Chemical Engineers, Center for Chemical Process Safety, NY, 1987, "An Evaluation of SLAB and **DEGADIS** Heavy Gas Dispersion Models Using the HF Spill Test Data,' by Blewitt, D.N., J.F. Yohn, and D.L. Ermak. (130.13)

4. Koopman, Ronald P., Donald L. Ermak and Stevens T. Chan, "A Review of Recent Field Tests and Mathematical Modelling of Atmospheric Dispersion of Large Spills of Denser-Than-Air Gases," *Atmospheric Environment,* Volume 23, Number 4, pp **731-745**, 1989. (289.2)

5. *HF Mitigation Water Spray Project,* created for a meeting of the American Petroleum Institute and provided to the U.S. Environmental Protection Agency, December 10, **1991**. (424.34ABC)

6. Memorandum, Subject: *Public Domain Models Which Could be Used to Simulate an Accidental Release* of *HF,* From: D.N. Blewitt, To: R.C. Wade, April **1**, 1991. (580)

7. *International Conference and Workshop on Modeling and Mitigating the Consequences of Accidental Releases of Hazardous Materials, May 20-24, 7997, Fairmont Hotel, New Orleans, Louisiana,* American Institute of Chemical Engineers, Center for Chemical Process Safety, New York, 1991, "HF-DEGADIS Simulation of Dense Gas Dispersion from a Wind Tunnel-Modeled Oil Refinery," by Moser, James H., Doug N. Blewitt, Kenneth W. Steinberg, Ronald L. Petersen, **(350)**

8. Kurata, Susan, and Steve Smith, *Final Environmental Assessment for Proposed Rule 1410: Hydrogen Fluoride Storage and* Use, South Coast Management District, April 2, 1991. (290)

9. Meeting between U.S. Environmental Protection Agency and Dr. Jerry Havens from the University of Arkansas, April 1992.

10. Witlox, H.W.M., K. McFarlane, F.J. Rees, and J.S. Puttock, *Development and Validation of Atmospheric Dispersion Models for Ideal Gases and Hydrogen Fluoride, Part II: HGSYSTEM Program User's Manual,* Shell Research Limited, Thornton Research Centre, Chester, England, November 1990. (509)

11. Blewitt, D.N., K. McFarlane, A. Prothero, J.S. Puttock, F.J. Rees, P.T. Roberts, and H.W.M. **Witlox**, *Development of HFSYSTEM Programs for Hydrogen Fluoride Dispersion Assessment.* Presented at the 1990 Health and Safety Symposium Organized by AIChE in Orlando, Florida, March **18-22**, 1990. (57)

12. Woodward, John, ed., "An Evaluation of SLAB and DEGADIS Heavy Gas Dispersion Models Using the HF Spill Test Data."

13. South Coast Air Quality Management District, *Review of Dense Gas Modeling with Emphasis on Application in Planning for Accidental Releases and Emergency Responses,* Final Report, Contract No. C91319, February 26, 1992. Prepared by Steven R. Hanna, Joseph C. Chang and David G. Strimaitis. (441)

14. Spicer, T.O., and J. Havens, *Modeling HF and NH3 Spill Test Data Using Degadis,* Department of Chemical Engineering, University of Arkansas, Fayetteville, Arkansas, August 1988. (444)

15. Woodward, John, ed., "An Evaluation of SLAB and DEGADIS Heavy Gas Dispersion Models Using the HF Spill Test Data,' p 69.

16. Woodward, John, ed., "An Evaluation of SLAB and DEGADIS Heavy Gas Dispersion Models Using the HF Spill Test Data," p 68.

17. Ermak, Donald L., *User's Manual for SLAB: An Atmospheric Dispersion Model for Denser-than-Air Releases,* University of California, Lawrence Livermore National Laboratory, June 1990, Document Number: UCRL-MA-105607. (139.8)

18. Spicer, T.O.

19. Woodward, John, ed., 'An Evaluation of SLAB and DEGADIS Heavy Gas Dispersion Models Using the HF Spill Test Data,' p 69.

20. South Coast Air Quality Management District, *Review of Dense Gas Modeling with Emphasis on Application in Planning for Accidental Releases and Emergency Responses.*

21. Hanna, Steven R., David G. Strimaitis, and Joseph C. Chang, "Evaluation of Fourteen Hazardous Gas Models with Ammonia and Hydrogen Fluoride Field Data', Journal of *Hazardous Materials,* 1991, vol 26, p. 127-158.

22. Industry Cooperative HF Mitigation/Assessment Program Ambient Impact Assessment Subcommittee, *Development and Validation of Atmospheric Dispersion Mode/s for Ideal Gases and Hydrogen Fluoride, Part I: Technical Reference Manual,* Shell Research Limited, Thornton Research Centre, Chester, England, November 1990, Document Number TNER.90.015. Prepared by K. McFarlane, A. Prothero, J.S. Puttock, P.T. Roberts, and H.W. M. Witlox. (328.65)

23. *International Conference and Workshop on Modeling and Mitigating the Consequences of Accidental Releases of Hazardous Materials,* "HF-DEGADIS Simulation of Dense Gas Dispersion from a Wind Tunnel-Modeled Oil Refinery."

24. Fthenakis, Vasilis M., Brookhaven National Laboratory, comments from technical review of *Hydrogen Fluoride Study, Report to Congress,* Draft May 8, 1992, June 8, 1992. (139.69)

25. *International Conference and Workshop on Modeling and Mitigating the Consequences of Accidental Releases of Hazardous Materials, May 20-24, 1991, Fairmont Hotel, New Orleans, Louisiana,* American Institute of Chemical Engineers, Center for Chemical Process Safety, New York, 1991, "Modeling of Water Spraying of Field Releases of Hydrogen Fluoride," by Fthenakis, V.M., K.W. Schatz, and V. Zakkay. (140)

ED_002700_00005500-00179

26. Fthenakis, Vasilis M., Brookhaven National Laboratory.

27. Fthenakis, V.M. and K.W. Schatz, *Numerical Simulations of Turbulent Flow Fields Caused by Spraying of Water on Large Releases of Hydrogen Fluoride,* Biomedical and Environmental Assessment Division, Department of Applied Science, Brookhaven National Laboratory, Associated Universities, Inc., May 1991. (139.66)

28. Fthenakis, V. M. and Doug M. Blewitt, 'Mitigation of HF Release: Assessment of the Performance of Water Spraying Systems,' Presentation at the 7992 *AIChE Summer National Meeting, Minneapolis,* Brookhaven National Laboratory, Upton, NY, August, 9-l 2, 1992. (139.67)

29. U.S. Environmental Protection Agency, *An SAB Report: Review of Hydrogen Fluoride Study:* ***Report*** *to Congress,* Science Advisory Board, Washington, D.C., December 1992. (489.89b)

30. Hague, William J., Allied-Signal, comments on *Hydrogen Fluoride Study, Report to Congress, Draft* May 8, 7992, June 10, 1992. (153)

31. Laumer, John and Harold Lamb, Elf Atochem North America Inc., comments from technical review of *Hydrogen Fluoride Study, Report to Congress,* Draft May 8, 1992, June 4, 1992. (290.8)

32. South Coast Air Quality Management District, *Source Terms and Frequency Estimates of Selected Accidental Hydrofluoric Acid Release Scenarios in the South Coast Air Basin,* El Monte, CA, December 1990. Prepared by PLG, Inc. (442.7)

33. South Coast Air Quality Management District Board, *Recommendations on the Potential Hazards of Hydrogen Fluoride Transportation, Storage, and* Use, El Monte, CA, April 4, 1990. (442.5)

34. Du Pont Chemicals, *Du Pont's La Porte, Texas Plant's Disaster Scenarios, Air Permit Submitted to TACB-1997,* Wilmington, DE, 1991. (139)

35. Risk Management Plans, **HazOp,** Safety. (424.34)

36. *ERNS Data Base,* U.S. Environmental Protection Agency, U.S. Department of Transportation, U.S. Coast Guard, National Response Center, 1987-1991. (139.525)

37. U.S. Environmental Protection Agency, *U.S. EPA Release Prevention Questionnaires,* 1987-1988. (490)

38. U.S. Environmental Protection Agency, *Hydrofluoric Acid Events in Acute Hazards Events Database,* June 5, 1991. (200)

39. Blewitt, Doug, *N., Design of Water Spray Mitigation Systems for Amoco HF Alkylation Units. (56)*

40. ten Berge, W.F., A. Zwart, and L.M. Appelman, 'Concentration-Time Mortality Response Relationship of Irritant and Systemically Acting Vapours and **Gases,"** Journal *of Hazardous Materials,* Volume 13, 1986, pp 301309. (54.5)

ED_002700_00005500-00180

41. de Weger, Dik, Chris M. Pietersen, and Paul G.J. Reuzel, "Consequences of Exposure to Toxic Gases Following Industrial Disasters," *Journal of Loss Prevention in the Process Industries,* Volume 4, July 1991. (502)

42. **Mudan,** Krishna *S., Acute Inhalation Toxicity of Hydrogen Fluoride,* **Technica** Inc., Columbus, OH, March 1989. (360)

43. U.S. Department of Transportation, *Study to* Modify *the* Vulnerability *Mode/* of *the Risk Management System,* United States Coast Guard, Office of Research and Development, Washington, D.C., February 1980, Document Number CG-D-22-80. (489.91)

44. "HF Guidelines Change," (Health and Safety Executive Announcement from Jane C. Bugler), *The Chemical Engineer,* June 25, 1992, p 7. (76.3)

45. Panketh, Joseph, K. Horne, K. Neumann, and S. Keil, *Case Studies of Texas Air Control Board: Permit Reviews in which Potential for Catastrophic Releases Was Considered,* Texas Air Control Board, Austin, TX, October 1986. (471)

46. South Coast Air Quality Management District, *Source Terms and Frequency Estimates.*

47. U.S. Environmental Protection Agency, Federal Emergency Management Agency, and US. Department of Transportation, *Technical Guidance for Hazards Analysis: Emergency Planning for Extremely Hazardous Substances,* December 1987. (489.95)

48. South Coast Air Quality Management District, *Source Terms and Frequency Estimates.*

49. South Coast Air Quality Management District, *Source Terms and Frequency Estimates.*

50. South Coast Air Quality Management District Board, Recommendations on the Potential Hazards of Hydrogen Fluoride Transportation, Storage, and Use.

51. South Coast Air Quality Management District, *Source Terms and Frequency Estimates.*

52. *Du font Chemicals, Du font's La Porte, Texas Plant's Disaster Scenarios.*

53. Du Pont Chemicals, *Du font's La Porte, Texas Plant's Disaster Scenarios.*

54. *Du* font Chemicals, *Du* font's La *Porte, Texas* Plant's Disaster Scenarios.

55. Du Pont Chemicals, *Du font's La Porte, Texas Plant's Disaster Scenarios,*

56. Risk Management Plans, HAZOP, Safety Evaluations, etc., for various anonymous HF/Refining/Alkylation facilities. (424.34E)

57. Risk Management Plans, HAZOP, Safety Evaluations, etc.

58. Woodward, John, ed., *International Conference on Vapor Cloud Modeling, November 2-4, 1987, Boston Marriott Cambridge, Cambridge, MA,* American Institute of Chemical Engineers, Center for Chemical Process Safety, NY, 1987, 'An Evaluation of **SLAB** and **DEGADIS** Heavy Gas Dispersion Models Using the HF Spill Test Data."

ED_002700_00005500-00181

59. Industry Cooperative HF Mitigation/Assessment Program Ambient Impact Assessment Subcommittee, *Development and Validation of Atmospheric Dispersion Models for Ideal Gases and Hydrogen Fluoride, Part I: Technical Reference Manual,* Shell Research Limited, Thorton Research Centre, Chester, England, November 1990, p 7.17-24, Document Number TNER.90.015. Prepared by K. McFarlane, A. Prothero, J.S. Puttock, P.T. Roberts, and H.W. M. Witlox. (328.65)

60. American Petroleum Institute (API), *Safe Operation of Hydrofluoric Acid Alkylation Units, API Recommended Practice* 757, First Edition, June 1992. (10.6)

61. Guinnup, D.E. and Q.T. Nguyen, "A Sensitivity Study of the Modeling Results from Three Dense Gas Dispersion Models in the Simulation of a Release of Liquefied Methane: SLAB, HEGADAS, and DEGADIS," *Seventh Joint Conference on Applications of Air Pollution Meteorology with AWMA,* New Orleans, LA, January 14-18, 1991.

62. Industry Cooperative HF Mitigation/Assessment Program Ambient Impact Assessment Subcommittee.

63. Industry Cooperative HF Mitigation/Assessment Program Ambient Impact Assessment Subcommittee.

ED_002700_00005500-00182

This page intentionally left blank.

ED_002700_00005500-00183

10. COMMUNITY AND FACILITY EMERGENCY PREPAREDNESS AND PLANNING

In the course of visiting facilities to research the question of the hazards associated with the production and use of HF, some limited information on the interface between the facility and the surrounding communities was gathered. The information presented in this chapter is, therefore, anecdotal, and is not intended to be either comprehensive or representative of the US. or community planning and preparedness concerning HF.

10.1 Emergency Preparedness and Planning

In the event of an HF release, community officials must be informed of the release and be prepared to take appropriate action (e.g., shelter-in-place or evacuation of the public from affected areas). However, in the event of an accident involving a release, community officials may not be able to react quickly or responsibly without prior communication and planning coordination with the facility. Industry also recognizes the need to plan for emergency response with the community. Because an HF release has the potential to cross the fenceline, facilities handling HF are developing community outreach activities.

The HF incident in Texas City, Texas highlighted the need for community and facility emergency planning and preparedness, especially for HF or similar releases. Marathon requested assistance from the Industrial Mutual Aid System (IMAS) and notified the Texas City Emergency Operations Center (EOC), including the Texas City Police and Fire Departments, to call for an immediate public evacuation. A Community Awareness and Emergency Response (CAER) alarm system had been installed in the facility four months prior to the release. However, because of a lack of coordination between the IMAS and the Texas City EOC, the citizens of Texas City were not fully acquainted with the meaning of the alarms or procedures to follow when the alarms sounded. Consequently, many people did not understand the sirens' warnings or paid little attention to them.'

The emergency planning and response needs and interactions between a community and a facility depend on many factors including the chemicals and processes involved at the facility, the response capabilities of the community and the facility, and the magnitude and nature of the potential threat to the community. To promote community and facility cooperation in developing emergency response plans to deal with releases of hazardous chemicals, guidance and regulations are provided by the federal government, by various state or local governments (e.g., the South Coast Air Quality Management District), and by several industry associations. On the federal level, the Emergency Planning and Community Right-to-Know Act (also known as SARA Title III) is designed to facilitate the development of the capability of state and local governments to respond to potential chemical emergencies through better communication, coordination, and planning with industry. Emphasizing planning within the local community, SARA Tile III mandated the formation of Local Emergency Planning Committees (LEPCs) comprised of local emergency preparedness officials, industry and facility officials, and citizens. The primary purpose of the LEPCs is to develop community emergency response plans for facilities and transportation routes. Such efforts require the LEPC to maintain communication with industry about the chemical hazards present at facilities, The plan outlines the procedures for communicating with the facility, for transferring information from the facility, for mobilizing the emergency response, and for evacuating or sheltering the public. Some facilities that handle HF are members of or contribute to LEPCs. For example, as an active member of the Ascension Parish LEPC in Louisiana, Allied-Signal provides the LEPC with HF technical information and resource support.[2] In another example, Motorola has assisted the Phoenix Fire Department in purchasing CAMEO software and equipping fire trucks with Macintosh computers.[3] The development of air dispersion modeling capabilities has been recommended to aid in emergency planning and

ED_002700_00005500-00184

response.[4] Such modeling can help to determine the area likely to be affected by a toxic vapor cloud and areas that should be evacuated.

In Rule 1410, the South Coast Air Quality Management District (SCAQMD) requires HF facilities in the Los Angeles Basin to coordinate with them to develop systems to transfer HF release information quickly in an emergency. For example, the SCAQMD mandated that the five facilities that use anhydrous HF in the Basin link their HF detectors directly to a computer at the SCAQMD to identify, monitor, and locate HF releases. This, combined with a dedicated facility phone line to SCAQMD, is intended to provide rapid notification of a release. Although the SCAQMD does not have response capabilities, this detector arrangement has the effect of involving the SCAQMD in the direct information loop concerning HF releases.

10.2 Industry Programs and Cooperation with the Community

Industry associations and many individual facilities have been active in attempting to design programs to coordinate with community officials and the public. The Chemical Manufacturers Association (CMA) has developed a community-oriented program called the Community Awareness Emergency Response (CAER) program. CAER recommends ways for chemical facilities to develop working relationships with communities. The following are a few examples of CAER-sponsored outreach programs to the community about the hazards of HF:

- Allied-Signal provided to the community a CAER calendar containing a map of the facility and emergency routes in the community, instructions on how to shelter in place in the event of an HF release, a description of the meanings of different emergency sirens, and reminders of the calendar dates of siren tests.[5]

- Champlin Refinery in Humble, Texas involved the community in the installation, testing, and inspection of CAER sirens.

- The LEPC of La Porte, Texas, posted a highway sign that provides the public with a telephone number to call for information on chemical hazards in the community. Also in La Porte, Du Pont has installed an emergency communication system with the community consisting of a dedicated telephone network, emergency broadcast station, and a telephone hotline.

In some industries, facilities have developed mutual aid agreements to respond and assist in the event of an emergency at any member facility. CMA has established an HF Mutual Aid Group made up of emergency response teams with special training, primarily for response to transportation accidents. The response teams are activated through CMA's Chemical Transportation Emergency Center (CHEMTREC), which is a public service established by CMA in 1971 to provide information and technical assistance to responders during hazardous materials emergencies.[6]

Mutual aid agreements may also involve community officials. For example, the Geismar Area Mutual Aid group in Ascension Parish, Louisiana, has 24 member chemical companies and provides much of the funding for materials and training needed by the parish Sheriffs Hazmat Team. Typically, members of the mutual aid agreements will also be members of the LEPC.

Other facilities have developed relationships through direct cooperation with local government agencies. For example, the Ultramar Refinery jointly organized and conducted HF release simulations and drills with the Los Angeles Fire Department. Facilities which have not previously conducted drills

ED_002700_00005500-00185

can start initially with a table top exercise, and then work up to simulations in cooperation with the local fire department.

Because of **HF's** toxicity, HF producers and shippers have involved hospitals in the communities' emergency preparedness and response activities. Hospital personnel prepare for possible emergencies by learning the medical techniques to treat HF exposure injuries, establishing communication with the facility and community, and participating in mock drills.
HF manufacturers aid in emergency response by providing medical information to medical professionals and the public during chemical emergencies. CMA recently established a medical treatment emergency communication network pilot program in conjunction with the San Francisco Bay Area Regional Poison Control Center. In addition, CHEMTREC's 24-hour medical emergency assistance network provides support to CHEMTREC, CHEMTREC registrants, and medical professionals for incidents involving exposure to industrial chemicals, including **HF**.[8]

Elf Atochem has a fluorocarbon manufacturing facility located in Wichita, Kansas that has conducted drills, exercises, and training with the local government, other facilities, and the surrounding community in planning for an HF release. The Atochem facility is adjacent to a facility owned by Vulcan Chemical. Because a major HF release could affect personnel in both companies, Atochem conducts **tabletop** exercises in conjunction with Vulcan. Past exercises have simulated an HF release, associated injuries, off-site monitoring, and medical treatment. To alert facility employees of an actual emergency, the facility complex is equipped with a warning siren. Instant alerts have been installed in homes within a three-mile radius of the complex. In addition, Atochem has coordinated with the Sedgewick County Fire Department and the LEPC. Atochem has often assisted in training the fire department's HazMat team. In the event of a gas release, the team is capable of monitoring for dense gas in basements and low lying areas. Atochem has been well represented on the LEPC, at one point serving as LEPC chair. A regional burn center in the area is also equipped to deal with victims of HF exposure.[9]

Sun Oil in Tulsa, Oklahoma had an HF release in March of 1988. To allay substantial public fear concerning HF, Sun has conducted an extensive public information campaign. The LEPC is also well informed of the hazards of HF. Sun trains all local emergency response agencies, including the fire department, police department, hospital, and emergency medical units (air and ground) specifically for an HF release from the facility. Drills are conducted annually, during which a video of the 1988 release is shown. Sun also participates in exercises with the railroad that transports HF through Tulsa every week led by the city of Tulsa. Smoke is used to simulate the release."

10.3 Ways to Improve Facility Emergency Preparedness and Planning

Although many facilities have initiated and actively participated in emergency preparedness and planning activities, Chemical Safety Audits (CSAs) conducted by EPA indicate that the companies could be doing more. CSAs describe the activities of chemical plants that EPA has reason to believe may pose risk to the public and recommend ways to improve chemical safety. Summaries of the recommendations made by CSAs at two refineries with HF alkylation units, a semiconductor etching facility, and an aluminum manufacturer are provided below.

- The BP Oil refinery in Ferndale, Washington, was chosen for a CSA because it released hazardous substances nine times in 1969, according to National Response Center records. The audit was conducted March 19, 1990. The refinery is in an area defined at an earthquake vulnerability ranking of 3.5 out of a possible 5 and does not have a formal inspection program for HF storage tanks. BP has conducted emergency drills with the local emergency medical services group, but has not scheduled or conducted any exercises with the Lummi Tribal Reservation, which is adjacent to the plant and has a population

ED_002700_00005500-00186

of 3,200. The reservation does not have an emergency response plan, and the refinery has no public notification capacity in the event of an emergency. The CSA recommended that BP install a public notification system and initiate an appropriate training program to ensure effective warning to neighboring communities."

- The Motorola semiconductor facility was chosen for a CSA because of its location within the densely populated metropolitan area of Phoenix, Arizona, and because of the large number and quantity of extremely hazardous substances used and stored on site, including HF. The audit was conducted April 9, 1991. Although Motorola has assisted the Phoenix Fire Department in purchasing CAMEO software and Macintosh computers, neither CAMEO nor any other hazard analysis method is used by Motorola or the fire department for identifying vulnerable zones in the surrounding area in scenarios based on the types and quantities of Motorola's chemical inventory. The CSA recommended that Motorola meet with the Phoenix Fire Department and work together with them to run CAMEO prior to an emergency situation.[12]

- EPA chose to audit the Phillips refinery in West Bountiful, Utah, after an operator's error resulted in an HF release from the alkylation unit. The audit was conducted May 2, 1989. The facility does not have a representative on the LEPC and has had no contact with this group. The CSA recommended that the facility ensure that it is represented on the LEPC.[13]

- The Columbia Falls Aluminum Company (CFAC) in Columbia Falls, Montana, was selected for a CSA because of a release to air of 7,700 pounds of HF. The audit was conducted April 30 - May 3, 1991, The facility is located in a potential earthquake and flood zone. Facility emergency plans and training sessions have been coordinated with the fire department. A CFAC representative is a member of the LEPC, but at the time of the audit the company had not conducted any training or exercises with the LEPC. The CSA recommended that the CFAC should consider working more closely with local authorities and conduct regular table top exercises to simulate a response in the event of a natural disaster.[14]

Other CSA recommendations have been that facilities initiate training and exercises with LEPCs, consider using separate siren signals for indicating emergencies and for lunch and quitting time, review and revise the emergency response plan, and develop an agreement with other local facilities to coordinate mutual aid.

10.4 Community Efforts to Promote Emergency Preparedness and Planning

Anecdotal information on community emergency planning and preparedness for HF incidents has been gathered through contacts with local governments officials, LEPC representatives, and industry members. The degree of preparedness for a release varies from community to community depending a number of factors, including the perceived risk of such an incident, the resources available to respond to it, and the degree of concern demonstrated by the public regarding HF hazards. Many facilities work closely with local governments to develop emergency plans and conduct exercises to test response capabilities.

Delaware County, Pennsylvania, has two HF facilities within its boundaries: the BP refinery and the General Chemical Corporation. Delaware County Emergency Services officials are well aware of the danger posed by HF, have developed a plan to respond to a release, and have conducted table

ED_002700_00005500-00187

top simulation exercises. The county developed its plan with the help of an industry advisory council that brings in experts to discuss the hazards of specific chemicals, including HF. In addition to the industry group there is also a citizens advisory group; however, their concerns have focused primarily on foul odors and soot rather than the threat of an HF emergency. According to the county's analysis, the worst-case scenario for an HF emergency would be a rail accident in which a tank car carrying HF ruptured in a densely populated area. Releases from the facilities themselves might be less serious because the facilities are located near a wide stretch of the Delaware River with prevailing wind direction that would carry fumes away from populated areas. Officials are confident that because of their planning, they will be well prepared should an accident occur."

The LEPC, whose jurisdiction includes Atochem's main HF production facility in Calvett City, Kentucky has received funding from industry members and has worked in a close and cooperative manner with the industries in the area. Although citizens are aware that HF is handled in the area, there has been little concern directed specifically at HF. There have been a few citizens voicing concerns about chemicals in general.

A table top exercise was conducted to simulate an HF release from the Atochem facility, using a worst-case release which impacted the nearby GAF facility. In general, the facility was expected to address issues that include stopping and mitigating the release, notification of authorities, and the media; the LEPC coordinated responses external to the facility. Atochem developed the scenario and made assumptions regarding the quantity released and wind direction. The LEPC provided situations to create confusion that Atochem had to address internally in its response actions, Although the simulation was considered a low probability event, worst-case incidents are used for planning purposes, Industry personnel, fire, police, emergency medical, and local citizens participated in the exercise. In-place sheltering and evacuation were emphasized.[16]

There have been some problems, however, in coordinating facility and community emergency response efforts. During the site visits EPA conducted to HF facilities to gather information for this study, many facilities mentioned the difficulty of maintaining or attracting public interest in learning about the hazards of HF. Some facilities indicated a sense of frustration that the public is more concerned about nuisances such as noise and odors rather than about the hazards of an HF vapor cloud. Usually, however, until a release occurs that directly affects the public in an area, it is difficult to raise public consciousness regarding chemical hazards. Also, the residents who live near facilities are used to living with general chemical hazards and are to some extent unconcerned. For instance, both the Allied-Signal HF manufacturing facility in Geismar, Louisiana, and the BP oil refinery in Belle Chasse, LA, invited the local community to tour their facility (including the HF processes) and encouraged them to ask questions. However, attendance was poor, in part because of the small population around the facilities.

Also, LEPCs charged with developing emergency response plans may be unaware of and therefore fail to address HF hazards posed to the community. Many LEPCs lack the resources or manpower to handle the overwhelming workload of developing emergency plans for many hazardous chemicals. Consequently, they rely on the best judgment of the facility. Still others may not recognize the serious hazards posed by HF.

ED_002700_00005500-00188

ENDNOTES

1. Memorandum, Subject: OSC *Report to the National Response Team Major Air Release of Hydrofluoric Acid Marathon Petroleum Company Texas City, Galveston County, Texas - October 30 to November 1,* 7987, From: Robert M. Ryan, On-Scene Coordinator, U.S. Environmental Protection Agency Region IV, To: National Response Team, March 4, 1988. (370)

2. Allied-Signal Inc., HF Product Group, Hydrogen Fluoride Production, Geismar Plant, Community Relations/Awareness Programs, Geismar, LA, February 1992. (147.1 c)

3. Motorola, Inc., *Chemical Safety Audit Profile, Discrete and Materials,* Phoenix, AZ, April 9, 1991. (116.3)

4. Memorandum, Subject: OSC *Report.*

5. Allied-Signal Inc., HF Product Group, Hydrogen Fluoride Production, Geismar Plant, Community Relations/Awareness Programs, Geismar, LA, February 1992. (147.1 c)

6. Strickland, Gordon D., Chemical Manufacturers Association, comments from technical review of *Hydrogen Fluoride Study, Report to Congress,* Draft May 8, 1992, June 5, 1992. (466.9)

7. Allied-Signal Inc., HF Product Group.

8. Strickland, Gordon D., Chemical Manufacturers Association, comments from technical review of *Hydrogen Fluoride Study, Report to Congress,* Draft May 8, 1992, June 5, 1992. (466.9)

9. Personal Communication, Conversation with Larry Masters, Sedgewick County LEPC, Wichita, KS, April 17, 1992. (328.61)

10. Personal Communication, Conversation with Mike Linville, Tulsa County LEPC, Tulsa County, OK, April 14, 1992. (299.95)

11. *Chemical Safety Audit Profile,* British Petroleum Company, Ferndale, WA, March 19, 1990. (116.2)

12. *Chemical Safety Audit Profile,* Motorola, Inc., Discrete and Materials, Phoenix, AZ, April 9, 1991. (116.3)

13. *Chemical Safety Audit Profile,* Phillips 66 Company Woods Cross Petroleum, West Bountiful, UT, May 2, 1989. (116.4)

14. *Chemical Safety Audit Profile,* Columbia Falls Aluminum Co., Columbia Falls, MT, April 30, 1991. (76.8)

15. Personal Communication, Conversation with George Morgan, Delaware County Emergency Services, Delaware County, PA, April 8, 1992. (343)

16. Personal Communication, Conversation with Attabelle Willie, Marshall County LEPC, Marshall County, KY, April 14, 1992. (506.5)

ED_002700_00005500-00189

11. FINDINGS AND RECOMMENDATIONS

This chapter contains the findings and recommendations about the hazards of hydrogen fluoride (HF). They were derived from the technical information gathered about HF, site visits to facilities where HF is handled, discussions with a variety of stakeholders, and information from technical reviewers.

11.1 Findings

The primary purpose of the findings is to characterize the results of the HF study. The Agency provided substantial opportunity for comment by stakeholders in this study. Many of the findings are simple statements of the facts about HF. In addition, findings related to the broader issues associated with chemical hazards, risks and risk management are included so that the findings about HF are kept in perspective.

11 .1.1 Summary Findings

HF is used industrially in large quantities throughout the United States (over 200,000 tons per year) and in a great number of applications across a broad range of industries (over 500 facilities). It serves as a major feedstock and source of the fluorine molecule for the production of fluorinated compounds.

An accidental release of HF from one of these industrial facilities could have severe consequences. HF is toxic to humans, flora, and fauna in certain doses and can be lethal as demonstrated by documented workplace accidents, HF can travel significant distances downwind as a dense vapor and aerosol under certain accidental release conditions. Because HF can exist as an aerosol, the cloud can contain a substantially greater quantity of the chemical than otherwise would be the case. Thus, the potentially high concentration of HF in these dense vapor and aerosol clouds could pose a significant threat to the public, especially in those instances where HF is handled at facilities located in densely populated areas. Prompt and specialized medical attention is necessary to treat HF exposure properly.

However, the risk to the public of exposure to HF is a function of both the potential consequences and the likelihood of occurrence of an accidental release; and the likelihood of an accidental release of HF can be kept low if facility owners/operators exercise the general duty and responsibility to design, operate, and maintain safe facilities. In particular, owners/operators can achieve an adequate margin of protection both for their workers and the surrounding community by assiduously applying existing industry standards and practices, existing regulations, and future guidance and regulations applicable to various classes of hazardous substances in various settings. The properties that make HF a potentially serious hazard are found individually or in combination in many other industrial chemicals: thus, HF does not require unique precautions. Instead, within each of the several different circumstances in which HF is handled, an appropriate combination of general and special precautions should result in: (1) the safe management of HF and other hazardous substances with an emphasis on accident prevention; (2) the preparedness to properly and quickly respond to chemical emergencies and to provide specialized medical treatment if necessary; and (3) community understanding of the risks involved.

11.1.2 Risk of HF to the Public

This section addresses the findings concerning the risks of HF to the public. Consequences and likelihood are individually addressed in subsequent sections.

ED_002700_00005500-00190

- Risks from a major accidental HF release may vary from facility to facility depending on site-specific factors such as the density and distribution of nearby populations and the quality of process safety management and risk management practiced at the facility. Some facilities present greater risk than others.

- Since risk is a product of both consequences and likelihood, judgements of risk should not be made solely on the basis of the analysis of consequences. Thus, risk reduction must take both consequence and likelihood of occurrence into account. Actions taken based on consequence analysis alone, without consideration of likelihood of occurrence, could lead to increased risk or to transfer of risk. For example, installation of equipment intended to reduce accident hazards may require additional connections (e.g., welds or gaskets). These connections represent additional locations where failure could occur.

- Similarly, the risks associated with an alternative chemical or process must be assessed and compared to HF process risks before any decision about the alternative can be made. Thus, the risks of sulfuric acid alkylation technology in petroleum refineries must be assessed and compared to the risks of HF alkylation technology before any decision is made to require a switch from one technology to another. Such an assessment must include hazards and risks associated with sulfuric acid manufacture, transportation, use, and regeneration. Although the uses and hazards of sulfuric acid were not analyzed in this study, some issues were identified:

  Although sulfuric acid has a much higher boiling point than HF and is not likely to vaporize or to generate an aerosol upon accidental release at normal alkylation conditions, other situations and scenarios where sulfuric acid could be vaporized or generate sulfur dioxide or sulfur trioxide releases (such as in the acid regeneration process) must be considered in a comprehensive assessment.

  Sulfuric acid alkylation involves significantly greater transportation requirements and associated transportation hazards where regeneration capacity is not available on site or via pipeline due to the much larger acid supply requirements.

  Conversion from one alkylation technology to another requires consideration of factors such as differing equipment, differing catalyst performances, and the potential physical space limitations in some refineries.

11.1.3 Consequences of an HF Release

This section addresses the consequences of a range of accidental HF release scenarios, including worst case scenarios as required by the Clean Air Act Amendments. A fundamental part of risk assessment is an assessment of the consequences of accidental releases.

Physical/Chemical Properties and Hazards

Consequence assessment requires an understanding of a number of factors including the physical/chemical properties and hazards of the chemical and its behavior upon release. The following sections address these issues.

- The physical/chemical properties of HF are complex but are not unique; several other industrial chemicals exhibit similar properties and hazards.

  HF is toxic and is mandated for inclusion in the Clean Air Act section 112(r)(3) list. It is also an extremely hazardous substance (EHS) under the Emergency Planning and Community-Right-to-Know Act (EPCRA).

ED_002700_00005500-00191

Possible immediate acute effects of HF exposure depend on the dose and exposure route (i.e., inhalation, dermal contact, ingestion) and can be as severe as death or pulmonary edema or as minor as mild skin **irritation** or no effect at all.

As an acid, HF can be very corrosive to common metals in the dilute, aqueous form. The use of anhydrous HF typically does not require exotic metallurgy when moisture levels are properly controlled.

Anhydrous HF has a boiling point of 67°F and will vaporize and become airborne if released above this temperature at atmospheric pressure. Under certain conditions, and particularly if released at temperatures below its boiling point, HF will form a liquid pool with vaporization at a much slower rate than at temperatures above the boiling point.

HF vapor may exhibit dense gas behavior when released although it has a molecular weight and density less than that of air in its dissociated state. When concentrated HF is released, the HF molecules in the vapor may be in an associated state (bound together as molecular groups) with a density greater than air. As the vapor entrains surrounding air, the molecular groups tend to dissociate to individual molecules of HF. Dissociation cools the plume which increases the density of the plume. The property of density greater than air presents a potential hazard because dense plumes resulting from a release tend to move at ground level where exposure is most likely to occur.

Substances liquefied under pressure at temperatures above their atmospheric boiling point may initially form aerosols (mists of liquid droplets) when released. The aerosol vaporizes as the plume travels downwind. Anhydrous HF may be handled under these conditions (chlorine and ammonia are other examples). Cooling of the vapor also occurs as a result of expansion during release. The hazard presented by an aerosol is the increased mass rate of release to atmosphere presented by the liquid droplets as compared to a gaseous vapor. The higher mass rate of release to atmosphere can generate greater downwind impacts.

HF is soluble in water and heat is generated as HF dissolves in water. The buoyancy of an HF vapor cloud is increased by the thermal effects of interaction between HF and moisture in the air. This property directionally counteracts the density effects of HF dissociation.

Anhydrous HF poses a greater atmospheric release hazard than aqueous solutions of HF. Even at ambient temperatures above the boiling point of HF, aqueous solutions of HF form liquid pools when released although the solutions may fume to a degree determined by the temperature and concentration of HF. HF in aqueous solution will vaporize at a much slower rate than anhydrous HF.

b Acute HF exposure (inhalation, dermal contact, or ingestion) requires prompt and specialized first-aid and follow-up medical treatment. Some of these procedures are unique for exposures to HF.

Actual and Potential Impacts on the Public

b HF in its anhydrous and aqueous forms is used industrially in large quantities and by a large number of facilities. HF is the primary source of fluorine for fluorinated chemicals and it is

used in the manufacture of a wide variety of products. Products include refrigerants, electronics, gasoline, detergents, and drugs,

U.S. annual capacity for HF production was 206,000 tons in 1992.

Over 500 facilities reported handling HF in the 1990 Toxic Release Inventory. This number represents only a fraction of the total number of facilities in which HF is handled.

- Facilities that handle HF are located in both urban and rural areas. Populations around facilities handling more than 10,000 pounds of HF can range from 0 to 24,000 within 1 mile and can range from 0 to 550,000 within 5 miles of such facilities,

- If accidentally released to the air in sufficient quantities and at sufficient rates, HF presents a potential off-site threat to the life and health of the exposed public.

  Actual impacts on the public in the US. from accidental HF releases have been rare and have been limited to injury (ranging from mild irritation to effects requiring hospital observation). No off-site fatalities have been known to result from an HF release.

  Two events were documented in this study where members of the public were injured as a result of exposure to HF. In one incident, a construction accident in a shutdown refinery alkylation unit resulted in 1,037 persons reporting to hospitals with approximately 100 admitted for treatment. In the second incident, a leaking rail car resulted in 71 injuries among the public.

  12 events were documented in this study where the public was evacuated as a result of an accidental HF release. Some of these evacuations were precautionary measures.

- A variety of worst-case accidental release scenarios show that HF could result in doses equivalent to the NIOSH **IDLH** beyond 10 km from the point of release. The AIHA ERPG-3 may also be exceeded for significant distances. The worst-case scenario is useful to facilities and to the community surrounding facilities to gain an understanding of the potential magnitude of severe situations and should be taken into account along with more probable scenarios when setting priorities for community emergency planning. Note, however, that the worst-case is designed to generate the maximum impact off-site and is considered to be extremely unlikely. The accidental release is based on situations such as catastrophic vessel failure or other scenarios where release rates are very high. These scenarios may also include worst-case meteorological and dispersion conditions. These situations and conditions do not take into account a variety of factors that can significantly alter the outcome of the downwind impacts.

  - The worst-case scenario does not take into account the role of process safety management in reducing the probability of loss of containment.

    The worst-case scenario does not take into account passive mitigation (such as diked areas or spill containment) or active mitigation (such as water spray and rapid de-inventory systems) that can reduce the amount released into the air.

  - The cloud is assumed to travel over smooth terrain. Actual terrain may be complex and obstacles may be present that affect the path and dispersion of the cloud.

ED_002700_00005500-00193

Worst-case meteorological conditions may not persist for long time periods or over long distances, Dispersion at more typical meteorological conditions significantly reduces the magnitude of the impact.

The dose that is actually received is uncertain and may be reduced or avoided by sheltering-in-place or evacuation.

b An assessment of a range of accident scenarios that are judged to be more likely to occur than catastrophic vessel failure or other scenarios with very high release rates shows a wide range of impacts that are highly sensitive to scenario conditions, Large, uncontrolled releases (e.g., transfer hose failures, pipe ruptures) appear to lead to significant downwind impacts, while small, quickly controlled and mitigated releases (e.g., leaks of small magnitude or short duration) show little or no off-site impact. These results vary widely depending on the rate of release, the speed at which the release is controlled and mitigated, the dispersion conditions, and the actual dose received by the public. Although these results may be judged to be imprecise and very uncertain predictions of what might actually occur in a release, they are extremely useful for comparison across scenarios to demonstrate the significant value of management to prevent large releases, and rapid control and mitigation of all accidental releases.

Atmospheric Dispersion Modeling

Atmospheric dispersion models are used to predict the downwind consequences of accidental releases, Models provide a way to estimate mathematically the dispersion behavior of a released substance in the atmosphere. Some are relatively simple and easy to use while others are complex and sophisticated.

b Because HF demonstrates complex behavior upon accidental release (e.g., association, dissociation, reaction with water, aerosol formation), accurate dispersion modeling requires sophisticated modeling techniques that can account for this behavior. Even with the most sophisticated models, results from modeling efforts are only gross approximations of actual conditions. Precise prediction of downwind concentration from an actual release is unlikely for reasons such as:

Assumptions about release rate may not reflect what actually occurs in a real event:

The effects of surface roughness and obstacles in the path of the cloud that influence dispersion are not precisely known although the models used assume greater dispersion as a result of complex terrain; and

Variability of meteorological conditions and exposure level affect the result,

b Dispersion models including SLAB and HGSYSTEM have been found to provide data consistent with HF cloud concentrations measured from controlled field tests of HF within a factor of five and sometimes within a factor of two. This difference indicates a lack of precision. However, model results are useful for general predictions, development of process safety management efforts, and for comparative assessments between scenarios.

b The calculated results from the same scenario using different models are slightly different. This reflects the differing degree to which models account for the complex factors which affect releases and atmospheric dispersion of released materials.

ED_002700_00005500-00194

- Results are extremely sensitive to assumed release rates (which relate to the accident scenario) and assumed atmospheric conditions (e.g., wind speed, atmospheric stability). Atmospheric conditions such as F stability may not occur for long periods of time or for long distances.

- The behavior of dense vapor plumes of HF, or other hazardous materials, the detection and mitigation of accidental releases, and the effects of exposure to toxic substances are continuing subjects of research interest and activity.

  The influence of complex terrain (the presence of obstacles such as facility and off-site structures) has not been adequately determined. It is possible that obstacles and certain terrain could inhibit dispersion rather than increase it.

  The levels used to predict the onset of toxic effects are uncertain. Research continues to determine appropriate acute exposure levels for emergency planning.

11 .1.4 Likelihood of an HF Accident

The likelihood of an accidental release can be reduced through appropriate control measures.

Prevention of Accidental Releases

- Accidental releases of HF can be prevented by application of process safety management principles. The following are among the ways that these principles are adopted:

  Under the Clean Air Act Amendments, industry has a responsibility to identify hazards, take the actions necessary to prevent chemical accidents, and to take action to mitigate accidents in the event they do occur.

  OSHA has promulgated a process safety management standard that requires facilities to implement process safety management programs for chemicals including HF to protect workers from chemical accidents. These same measures can also prevent chemical accidents that might affect the public.

  Under the Clean Air Act Amendments, EPA must promulgate rules that require facilities handling HF to implement a risk management plan designed to prevent chemical accidents that adversely affect the public.

  Voluntary initiatives (e.g., codes, standards, recommended practices) such as the API recommended practices for process safety management and HF alkylation, CMA's Responsible Care program, and the adoption of standards more stringent than regulatory requirements for transport vessels have been implemented by some facilities.

  Four states (New Jersey, Delaware, Nevada, and California) have adopted accident prevention requirements for many chemicals including HF.

- Research and development efforts are currently underway with one goal of modifying petroleum refinery HF alkylation systems such that accidental releases do not present a potential threat to the public.

  Additives to reduce the volatility of liquid HF are being developed. Limited testing has been conducted.

ED_002700_00005500-00195

Development of a solid alkylation catalyst is underway and is also in the pilot plant phase.

Detection and Mitigation

If an accidental release occurs, both modeling and actual experience demonstrate that rapid detection of a release and mitigation or control of the release can minimize the potential consequences.

Several technologies to detect HF releases exist. The concept has been included in South Coast Air Quality Management District (SCAQMD) regulations for petroleum refineries and refrigerant production facilities in southern California and endorsed as a recommended practice by the API for refinery HF alkylation units.

Mitigation technologies have been field tested, endorsed as recommended practices by the API for HF alkylation units in petroleum refineries, and required as an interim measure by the SCAQMD for certain petroleum refineries and refrigerant production facilities. Properly designed and operated water spray mitigation systems have been shown in field tests to significantly reduce the amount of HF that travels downwind. Known technologies include:

Water spray and deluge systems at the perimeter of an HF unit or particular equipment.
Rapid transfer systems to remove the contents of a leaking vessel.
Remotely or locally controlled valve systems to segregate or to isolate leaking parts of a process.
Remotely- and locally- controlled equipment to shut down or isolate affected equipment.

In spite of the availability of detection and mitigation measures, all facilities have not uniformly adopted such measures. In addition, the reliability of such equipment and the site-specific conditions must be considered before particular detection or mitigation systems are adopted or implemented.

Preparedness and Response

Comprehensive risk management must include planning and preparation for, and response to, chemical emergencies, Successful chemical accident prevention, preparedness, and response programs for HF and all other hazardous substances require the active participation of all stakeholders (e.g., workers, community, first responders, and industry).

- Facilities handling HF are subject to the emergency planning requirements of the Emergency Planning and Community Right-to-Know Act (EPCRA).

- Not all Local Emergency Planning Committees (LEPCs), HF facilities, or the public surrounding facilities handling bulk anhydrous HF or along anhydrous HF transportation routes are aware of, have planned for, and are prepared to deal with an HF emergency. The public is generally not aware of the hazards and risks existing at **facilities** that handle hazardous substances, including HF. In cases where this is true, the public would not know the proper protective actions to take in the event of a release.

  This finding is based on contact with a limited number of LEPCs in areas where facilities handling HF are located.

ED_002700_00005500-00196

Some, but not all facilities and **LEPCs**, have determined vulnerable zones, performed planning, and conducted table-top exercises and drills associated with an HF disaster.

Contact with a limited number of facilities indicates that few facilities have attempted to communicate risk to surrounding residents.

b Many facilities claim to be prepared to treat cases of acute exposure to HF or to arrange for such treatment.

A limited number of facilities have indicated that they have developed in-house capability and/or worked with local hospitals and clinics to ensure the capability to treat acute HF exposure.

b The accidental release prevention provisions of the Clean Air Act Amendments will require facilities handling HF above threshold quantities to implement an emergency response program.

11.2 Recommendations

The Clean Air Act Amendments require that the EPA make recommendations to the Congress for the reduction of the hazards of HF in industrial and commercial applications, if appropriate. This section contains recommendations to the Congress and to industry regarding the reduction of such hazards. Recommendations for further EPA efforts are also included. These recommendations are based on the findings about HF hazards and the technical information gathered about HF during the course of the study.

11.2.1 General

b The EPA does not recommend legislative action from the Congress at this time to reduce the hazards associated with HF. The regulations already promulgated, and being developed, under the authorities provided to EPA in CERCLA, EPCRA, and the accidental release prevention provisions of the CAAA, and to OSHA in the process safety management provisions of the CAAA, provide a good framework for the prevention of accidental chemical releases and preparedness in the event that they occur.

EPA should continue its Chemical Safety Audit program and conduct audits at HF facilities that have not been audited. Previously audited sites should be contacted to learn what improvements have been made, if any, since the initial audit. EPA should track implementation of current and future industry standards and recommended practices at HF facilities to determine which industry sectors comply with the standards. EPA should consider outreach specifically directed at non-participating sectors.

EPA should investigate any chemical accidents associated with HF that cause or have the potential to cause public impacts in order to determine the root cause of such accidents. This information can be used to determine whether current practices are adequate. Such investigations should be coordinated with the OSHA to encompass worker safety issues.

EPA should continue to investigate the need for additional rulemaking under the CAAA to require implementation of certain prevention, detection, monitoring, and mitigation efforts at facilities where extremely hazardous substances (such as HF) could generate

ED_002700_00005500-00197

vapor clouds and aerosols and travel off-site. The level of voluntary industry initiatives and degree of participation, the results of Chemical Safety Audits, and accident history should be taken into account.

- EPA should encourage dialogue on the implications of the findings of this study for industry, emergency response organizations, and the public. Information should also be shared via domestic and international presentations on the safety and research issues associated with HF.

  EPA will distribute this study widely to facilities, States, and localities where anhydrous HF is used. The EPA has already distributed an advisory to LEPCs to alert them to the hazards and process safety management issues associated with HF.

  EPA will share this study with other countries, particularly Mexico and Canada, for their use related to HF handling in their country and for border-related emergency issues.

- HF producers should practice product stewardship and should assure that customers are safely handling HF, are trained on the hazards of HF, and are taking steps to prevent accidental releases and to promptly respond and mitigate releases that do occur.

11.2.2 Facility and LEPC Coordination

- Facilities which handle hazardous substances that could form dense vapor clouds or aerosols if accidentally released, such as anhydrous HF, should work closely with their LEPC to prevent accidents and to be prepared to respond to such accidents.

  Facilities should identify and thoroughly understand the hazards and conditions that can lead to accidental releases and the potential impacts on the public. These hazards and potential impacts should be communicated to the LEPC.

  EPA should work with fluorocarbon producers, HF manufacturers, and petroleum refineries that use anhydrous HF in populated areas and their associated LEPCs to offer assistance for prevention, preparedness, and response.

  All facilities that handle HF and the LEPC for that area should conduct drills and exercises with workers, the community, first responders and others to test mitigation, response and medical treatment for a simulated major HF accident, All facilities handling HF should have training programs and procedures in place for HF emergencies.

- Facilities that handle HF should actively conduct outreach efforts to ensure that the community is aware of the hazards of HF, that protective measures are in place to prevent public health impacts, and that proper actions will be taken during an emergency. Such outreach should be conducted through the LEPCs.

  All facilities that handle anhydrous HF should be able to rapidly detect, mitigate, and respond to accidental releases in order to minimize the consequences (e.g., through detection, monitoring, mitigation, and alert or alarm systems). Site-specific risk factors

All facilities that handle any form of HF should have proper medical treatment supplies and trained personnel available and should ensure that first responders, hospitals, and clinics in the area are prepared to treat HF exposure.

- EPA should coordinate with industry and others to determine which other toxic substances generate aerosols at certain conditions upon accidental release and to communicate this hazard information to users and **LEPCs**.

11.2.3 Research and Further Studies

- Further study on the acute exposure levels of HF that result in irreversible health effects or lethality in humans should be conducted in order to improve emergency planning tools such as atmospheric dispersion models.

- EPA should monitor alkylation catalysis and HF additive research for potential process safety improvements.

- With EPA participation, industry should modify software for dense gas atmospheric dispersion models such as HGSYSTEM for HF to make them more user-friendly and more broadly disseminated to facility owner/operators.

- Further research on the effects of surface roughness and obstacles on dense-gas dispersion behavior should be conducted to determine their influences on toxic substance concentrations in a dispersing vapor cloud. The Liquefied Gaseous Fuels Spill Test Facility should be used for spill tests to assist in this research.

- EPA should continue to study the issues surrounding worst-case releases, their consequences and the likelihood of worst-case or other significant releases for extremely hazardous substances and the role and relationship of these issues to prevention, preparedness, and response.

Feedback from stakeholders included:

ED_002700_00005500-00199

APPENDIX I
SUMMARY NOTES FROM HF ROUNDTABLE

Introduction

Under the Clean Air Act Amendments of 1990, the Environmental Protection Agency (EPA) is required to 'complete a study of the industrial and commercial applications of hydrofluoric acid and to examine the potential hazards of hydrofluoric acid and the uses of hydrofluoric acid in industrial and commercial applications to public health and the environment considering a range of events including worst-case accidental releases and shall make recommendations to the Congress for the reduction of such hazards, if appropriate.' The study must be submitted to Congress by November 15, 1992.

EPA believes that the study must reflect input from those individuals and organizations with a "stake" or interest in its outcome. Such stakeholders include environmental groups, labor, industry, trade associations, professional societies, and state and federal government agencies. Consequently, EPA organized a "Roundtable' meeting with individuals representing these interests. The goals of the Roundtable were to:

- discuss key issues raised by EPA in its initial effort to begin the study;
- solicit input on additional issues important to stakeholders;
- solicit input on EPA's approach to the study and the ways to address critical issues; and
- solicit input to the issues and background information on hydrogen fluoride (HF) and to establish peer reviewers for the study.

Each meeting attendee briefly discussed his or her view of the purpose of the study, what the study should attempt to accomplish and how. The issues raised by each attendee were documented and discussed along with issues previously raised. Listed below are the issues and the results that were generated at the meeting.

General Results

- EPA believes the Roundtable meeting was quite successful. Some unresolved questions about release scenarios, consequences, probability, and risk may need to be addressed in future meetings with stakeholders.
- EPA needs to communicate the real issues associated with HF to dispel misconceptions and to place the hazards of HF in the context of other hazardous materials.
- Participants indicated that the study should also account for international efforts with respect to HF and not just U.S. interests.
- Additional stakeholders should be contacted and included in the study such as the Federal Emergency Management Agency (FEMA), the Nuclear Regulatory Commission (NRC), the Department of Transportation (DOT), the Department of Energy (DOE),

ED_002700_00005500-00200

State Emergency Response Commissions (SERCs), Local Emergency Planning Committees **(LEPCs),** City Managers, and Air Quality Management Districts. The public and workers also should be considered stakeholders.

Study Approach Results

Feedback from stakeholders included:

- All agreed that while discussion of HF hazards should be addressed in the context of other hazardous substances, the study should not get bogged down in general hazardous chemical issues such that the focus on HF is lost.

- Participants had conflicting viewpoints about how the report should address alternatives to HF, such as sulfuric acid. Some believed that sulfuric acid should be examined in detail whereas others supported the HF-only approach. EPA concluded to address all of the safety and handling issues involving sulfuric acid, but to present them in a summary.

- Participants pointed out that HF has many industrial applications -- some more hazardous than others. For example, uses of HF include etching glass, making pharmaceuticals, and making integrated circuits. All agreed that while the Clean Air Act requires EPA to address all concentrations and states of HF and all uses and issues associated with HF, certain 'cuts' could be made using criteria. For example, aqueous solutions of HF should be discussed in the report but their importance should be discounted because scientific evidence indicates little catastrophic potential from aqueous HF.

- EPA should not attempt to perform risk assessments itself because of time and resource limits. Instead, EPA should use the results of assessments already performed by industry. In addition, participants indicated that the model facility approach for assessment of release scenarios, consequences, and risks is not feasible because each site is unique. The model facility concept, however, is useful in describing successful release prevention practices and process safety management.

- Participants indicated that consequence analyses are critical in characterizing the potential impact from accidents at a facility and in examining how hazards are handled. EPA should review these consequence analyses of credible worst-case and near worst-case scenarios.

- EPA should not include a **cost/benefit** analysis in the Report to Congress, however, EPA should discuss the important role of cost/benefit analysis in making decisions about risk reduction alternatives.

- Participants indicated that the study should stress the importance of both worker safety and prevention.

- EPA needs to examine management practices and facility design in characterizing the safe production or use of HF.

ED_002700_00005500-00201

Future Steps

- Obtain information on various HF industry segments from the Roundtable participants.
- Obtain information on current research areas such as the toxicology of HF, accidents involving HF, and the transportation and storage of HF.

ED_002700_00005500-00202

This page intentionally left blank.

ED_002700_00005500-00203

APPENDIX II
SUMMARY OF COMMENTS FROM TECHNICAL REVIEWERS ON DRAFT HYDROGEN FLUORIDE STUDY

EPA developed a draft Hydrogen Fluoride Study report (May 8, 1992) that was sent to representatives of environmental groups, labor, industry, trade associations, professional societies, academia, and state and local government agencies for technical review. This draft did not include findings and recommendations. The intent of the review process was to ensure that technical information in EPA's report is complete and accurate and to provide EPA with an adequate technical basis for developing findings and making recommendations to Congress. About 100 draft review copies of the report were mailed out and forty-four reviewers provided EPA with information, recommendations for revisions to the document, and general comments. The reviewers who provided comment are listed in Exhibit 1 following the text of this document.

EPA appreciates the efforts of the reviewers, who provided much useful information and many helpful comments, The Agency has considered these comments and has revised the Hydrogen Fluoride (HF) Study based on many of the comments provided during the technical review. This appendix discusses comments made on the study and EPA's revisions based on the comments. The discussion is organized by chapter of the HF Study. Major technical comments are noted; however, this document is not intended to be a complete compilation of all comments and revisions. EPA thanks reviewers who suggested editorial changes or pointed out typographical errors. Corrections have been made to the study based on these comments, but they are not specifically noted in this document.

Chapter 1 - Introduction

Several reviewers recommended that a clearer distinction be made, in the introduction and throughout the HF Study, between aqueous and anhydrous HF. EPA agrees that this distinction should be clearly made and has revised the study, including the Introduction, accordingly.

EPA has eliminated the list of questions included in the Introduction, based on comments by reviewers. These questions were related to thought-provoking issues brought up at the stakeholders meeting; however, they do not accurately reflect the topics covered in EPA's report. The Introduction now emphasizes those issues that are the focus of the report.

Several reviewers provided useful information about the Goldfish studies of HF releases; EPA also has incorporated this information into the Introduction.

Chapter 2 - Properties and Hazards of HF

2.1 Description of Physical and Chemical Properties

Based on information from reviewers, EPA has revised its discussion of the corrosive properties of HF; EPA has emphasized the distinction between aqueous and anhydrous HF in this revised discussion, noting that aqueous, rather than anhydrous, HF is corrosive to a number of common industrial materials. The use of carbon steels for aqueous HF in concentrations of 70 percent or greater and chlorobutyl rubber-lined equipment for aqueous HF up to 70 percent concentration is mentioned in the document, as recommended by reviewers.

ED_002700_00005500-00204

The discussion of the reactivity of HF has been modified to note HF's similarity to other acids. In addition, based on comments by reviewers, the discussion of adding water to HF has been expanded to include information on use of water in large excess as a mitigation agent.

2.2 Health Hazards

Several reviewers provided additional information or clarification concerning the health hazards of HF. Data provided on HF concentrations that cause eye irritation and breathing difficulty have been incorporated into the document.

EPA has modified its description of the Galveston study of health effects from an HF release, based on comments by reviewers. The text has been corrected to note that subjects were interviewed once after the release as part of the exposure study and again for the symptom and disease prevalence study. In addition, EPA has included a brief discussion of questions raised by reviewers regarding the validity of the Galveston study, including the lack of a medical baseline, disagreement over definitions, and questions about causes of symptoms.

Several reviewers questioned the presentation of Immediately Dangerous to Life and Health (IDLH) levels and Emergency Response Planning Guidelines (ERPGs) for HF and other substances. EPA has clarified the discussion of these guideline levels and has changed the exhibit from a bar graph display to a table, as suggested by reviewers.

Comments were provided on the discussion of probit equations in Chapter 2; detailed comments were provided on Appendix III on probits. These comments were very helpful and were used as a basis for revisions, EPA has noted in the text that the same uncertainties that apply to probit analysis would apply to any analytical methods that use toxicity data for HF or other toxic substances.

EPA has modified its discussion of skin and eye contact with HF based on comments by reviewers, noting that HF should be diluted and rinsed from the skin, followed by additional treatment. The effect of exposure to HF vapor is discussed.

The discussion of recommended medical treatment for HF exposure has been modified to incorporate several comments. The draft document erroneously stated that quaternary ammonium compounds should be injected; as pointed out by reviewers, quaternary ammonium compound solutions are used to treat exposed skin by soaking. EPA has incorporated into the document additional details regarding treatment with calcium gluconate; e.g., treatment can involve gel application of calcium gluconate or injection of a 5 percent solution.

2.3 Environmental Hazards

As recommended by reviewers, EPA has noted that the effect of HF on aquatic and terrestrial life depends on exposure concentration. The addition of fluoride to drinking water to prevent tooth decay is noted.

2.4 Release Characteristics

Based on comments by reviewers, the discussion of the behavior of HF upon release has been modified and clarified. It is noted that HF spilled as a liquid will evaporate at a rate that depends on release temperature and atmospheric conditions, and as the liquid pool evaporates, the pool temperature will drop, causing a decrease in evaporation rate.

ED_002700_00005500-00205

The description of the Goldfish test series has also been modified based on comments. The text now notes that the conditions of the tests approximated HF alkylation unit operating parameters and that, upon release, about 20 percent of the HF vaporized and about 80 percent formed HF/water vapor aerosol. Additional references have been cited for the Goldfish tests, as recommended by reviewers.

Chapter 3 - Characterization of Hydrogen Fluoride Industry

3.1 Production of HF

Reviewers provided several corrections and additions to data on HF production and on producers identified in the document. These changes, including the deletion of references to Allied-Signal's Canadian plant, now closed, the addition of Industrias Quimicas de Mexico, and updates to international HF production capacity data, have been incorporated.

Several reviewers commented that data for U.S. imports of HF from Kenya and China reported in the document actually include fluorspar; however, EPA has been unable to verify this comment with the U.S. Department of Commerce and, therefore, has only noted it in the document.

3.2 Uses of HF

Data on HF facilities reporting to EPA's Toxic Release Inventory (TRI) have been updated to 1990, the most up-to-date data available. The percentages of total HF represented by various end uses have been updated to 1990, based on data provided by reviewers, The discussion of HF as an alkylation catalyst has also been revised to include updated data from reviewers on quantities of HF consumed and percent of alkylate produced using HF.

3.3 Market Outlook

The discussion of market outlook for HF has been extensively revised, based on comments by reviewers. The Montreal Protocol and London Amendments phasing out CFCs and their effect on the HF market are discussed. Predictions provided by reviewers, indicating a decline in HF consumption in the US. from 1991 to 1996, are included in the discussion.

Chapter 4 - Regulations and Initiatives

4.1 U.S. Federal Regulation of Hydrogen Fluoride

The section discussing OSHA's Process Safety Management Standard has been expanded to include more details about the requirements of this standard.

EPA has expanded the section on DOT regulations to include the DOT Response Guides for anhydrous and aqueous HF, as recommended by reviewers. EPA also has modified the discussion of DOT labeling and shipping requirements based on information provided by DOT, noting that "Corrosive 8" placards are required. In addition, HF meets the definition of a poison gas because of its vapor pressure at ambient temperature and its toxicity, and is a poisonous by inhalation material.

4.2 U.S. State and Local Regulations

EPA has added a discussion of the Texas Air Control Board's permitting program to control emissions of air pollutants, as recommended by reviewers.

ED_002700_00005500-00206

EPA has substantially revised the discussion of regulation of HF by the South Coast Air Quality Management District (SCAQMD). It is noted that the SCAQMD rule is in litigation and implementation has been suspended, as pointed out by reviewers. The direct comparison of HF and H_2SO_4 alkylation processes has been removed from this section because EPA decided it was inappropriate. EPA has included in this section a discussion of issues related to switching from HF to H_2SO_2 as an alkylation catalyst.

Based on information provided by reviewers, EPA has corrected inaccuracies in the discussion of the suit by the City of Torrance, CA, against Mobil Oil Corporation.

4.3 International Efforts

EPA has added information provided by reviewers to the discussion in the subsection on Great Britain concerning the development and use of risk-based criteria for determination of planning decisions regarding major hazard facilities by the U.K.'s Health and Safety Executive (HSE). Information also is included about the "Dangerous Toxic Load" (DTL) for HF published by the HSE under the Control of Major Accident Hazards (CIMAH) regulations.

The subsection on the Netherlands has been expanded to include a short discussion of increased safety in facilities through improved design and management and inventory reduction, based on comments by reviewers.

EPA has added a description of an HF modeling system developed by ELF to the subsection on France.

The description of Canada's Life-Cycle Management of Toxic Chemicals has been slightly revised based on comments.

The subsection on other international efforts now notes that Western Australia; Victoria, New South Wales; and Hong Kong have risk-based criteria in place for facilities that handle hazardous materials, based on information provided by reviewers.

EPA has added information on several additional international efforts, as recommended by reviewers. Subsections have been added on the Guiding Principles for Chemical Accident Prevention, Preparedness and Response, developed by the Organization for Economic Co-operation and Development (OECD) and Awareness and Preparedness for Emergencies at the Local Level (APELL), an initiative sponsored by the Industry and Environment Office (IEO) of the United Nations Environment Programme (UNEP), in cooperation with the CMA and the Conseil **Europeen** des Federations de l'Industrie Chimique (CEFIC).

Chapter 5 - Process Descriptions of Hydrogen Fluoride Industry

5.1 HF Manufacture

The description of HF manufacturing and the flow chart showing the process have been modified for greater accuracy and completeness based on information provided by reviewers.

5.2 Transportation and Storage

Several reviewers noted that air and hydrocarbon gases are not used in the compressed gas method for unloading HF. EPA has deleted references to use of gases other than nitrogen for this purpose. EPA also has modified the range reported for bulk storage tank capacities for HF based on comments by reviewers.

ED_002700_00005500-00207

5.3 Fluorocarbon Production (title changed from "Chlorofluorocarbon Production" as per comments received from fluorocarbon manufacturers)

EPA has modified the description of production processes, and the flowchart illustrating these processes, based on comments from fluorocarbon manufacturers. Additional information on the production of HCFCs and HFCs, provided by reviewers, has been included.

5.4 Alkylate Production for Gasoline

Information provided by reviewers on the importance of alkylate for aviation gasoline has been incorporated into this section. The descriptions of the HF alkylation processes have been modified based on comments by reviewers.

5.5 Uranium Processing

Reviewers provided useful information on the chemistry and processes involved in the use of HF in uranium processing, including descriptions of two different processes. EPA has incorporated this additional information into the document.

5.6 Aluminum Fluoride and Aluminum Manufacturing

Information provided by reviewers on the reactions and processes involved in aluminum production has been incorporated into this section to provide a clearer and more accurate description.

5.7 Electronics Manufacturing

Corrections and additional information provided by reviewers on concentrations used, silicon etching, and process details have been incorporated into this section.

5.6 Chemical Derivatives Manufacturing

Information provided by a reviewer has been added to this section describing the production of fluoroaromatics by diazotization of substituted anilines with sodium nitrite in anhydrous HF.

5.9 Processes Using Aqueous HF

No substantive comments were received on this section.

5.10 Dissolving Ores for Production of Tantalum and Columbium (Niobium) Metals ('Niobium' added to title for clarification, based on reviewers' comments)

No substantive comments were received on this section.

5.11 Linear Alkylbenzene Production

A few minor changes were made to clarify this section, based on comments (e.g., LAB for linear alkylbenzene, rather than Lab).

5.12 Pharmaceutical Production

EPA added this new section to the document, based on information provided by a pharmaceutical producer. This addition helps to provide a more complete overview of industries using HF.

ED_002700_00005500-00208

Chapter 6 - Hazards and Industry Practices for Processes Involving Hydrogen Fluoride

6.1 General Hazards

EPA has made minor modifications to this section for clarification; e.g., editorial changes to improve the wording.

6.2 General Industry Practices

Reviewers provided several suggestions for improving this section, EPA has added more information on the OSHA Process Safety Management Standard. Based on comments by reviewers, EPA has noted in the text the complexity of hazard evaluation and its interpretation. The discussion of Quantitative Risk Analysis (QRA) has been modified to include additional discussion of its strengths and uncertainties.

The section on industry-wide standards has been updated to include the API Recommended Practice 751, *Safe Operation of Hydrofluoric Acid Alkylation Units*. The descriptions of the National Petroleum Refiners Association and the Chemical Manufacturers Association Hydrogen Fluoride Panel have been modified for greater accuracy and completeness, based on comments by reviewers.

The discussion of corrosion has been modified based on comments by reviewers; the use of special carbon steels and other materials is discussed, and materials used for aqueous HF solutions are also noted. Potential cracking of welds in carbon steel pressure vessels and prevention of such cracking is discussed.

Based on comments from reviewers, EPA has corrected its description of shell and tube heat exchangers in HF service.

6.3 Specific Industry Hazards and Practices

EPA has made several changes to this section, based on information provided by reviewers. The HF production method used by Du Pont is described as an internally heated reactor method, and it is noted that Du Pont uses a Texas Nuclear Alloy Analyzer to verify composition of alloys. Information on HCFC and HFC production has been added to the subsection on fluorocarbon production (previously called chlorofluorocarbon production), and additional information provided by reviewers on equipment failure has been included. It is also noted that the overall reaction in CFC production is endothermic, not exothermic.

In the subsection on alkylate production, EPA has added information provided by reviewers on the use of isolation valves, double seals in the acid circulation pump in the UOP process, and the lower pressures used in the Phillips process.

Reviewers also provided additional information for the subsection on transportation and storage, including information on transfer procedures and transportation equipment.

The subsection on other uses was modified to include a discussion of the production of electronic aqueous HF, based on information provided by reviewers.

6.4 Research Efforts to Modify or Substitute HF in Alkylation

Based on comments by reviewers, EPA has noted in the document research efforts by UOP and Texaco, and by Phillips Petroleum.

ED_002700_00005500-00209

Chapter 7 - Industry Practices to Detect and Mitigate Hydrogen Fluoride Releases

7.1 General Industry Practices to Detect HF Releases

Based on comments by reviewers, a number of modifications have been made to this section. In the subsection on visual observation, it is noted that HF clouds are similar in appearance to steam clouds.

Information on thermal imaging systems, provided by reviewers, has been incorporated into the subsection on detector equipment and systems. The use of hydrocarbon detectors at alkylation unit sites is also noted. The discussion of multi-detector systems has been modified, based on information from reviewers.

7.2 HF Detectors Used by Specific Industries

EPA has corrected information relating to HF detection at specific facilities, based on comments by reviewers.

7.3 General Industry Practices to Mitigate HF Releases

Several reviewers noted that diking may not be very useful for dealing with spills of liquid HF because of its volatility; EPA has noted in the document that HF vaporizes rapidly. The subsection on secondary containment has been revised to reflect this.

The discussion of water spray systems has been extensively modified, based on information provided by reviewers. The text includes a description of the water spray test program, the Hawk Test series, sponsored and conducted by the Industry Cooperative HF Mitigation/Assessment Program (ICHMAP). Development of the HFSPRAY model for assessment of water spray systems is also mentioned. The description of water spray systems has been clarified: stationary water streams, water monitors, and water deluge systems are described. SCAQMD requirements are noted.

7.4 HF Mitigation Systems Used by Specific Industries

The discussion of HF mitigation systems at specific facilities has been corrected, based on comments by reviewers. It is noted that additional refineries have developed or are planning water spray mitigation systems, and the description of Amoco's water spray system has been modified based on comments.

Chapter 6 - Characterization of Hydrogen Fluoride Accidents

6.1 Examples of Major Accidents

EPA has noted in the description of the Marathon accident that the release included flashing vapor and droplets and took place over 44 hours and modified the discussion as suggested based on the pollution report by EPA's On-Scene Coordinator, which also includes OSHA notices of violations. The description of the Mobil accident has been modified based on comments, and EPA has expanded the description of the uranium hexafluoride accident at Sequoyah Fuels Corporation (subsidiary of Kerr-McGee), based on information provided by reviewers.

6.2 Analysis of HF Accident Databases

The analysis of reported incidents has been modified to distinguish, to the extent possible, incidents involving anhydrous HF from those involving aqueous HF.

ED_002700_00005500-00210

6.3 Overview of HF Accident Data

The discussion of transportation incident data has been expanded to note that almost five billion pounds of anhydrous HF have been shipped over the past ten years with few releases and no fatalities or serious injuries due to HF, as pointed out by reviewers. Incidents involving loading and unloading have been separated from incidents that occurred in transit, where possible.

Chapter 9 - Modeling Hydrogen Fluoride Releases

9.2 Models for Hydrogen Fluoride Releases

Based on comments, EPA has decided the discussion of sulfuric acid spill tests is inappropriate to a report on HF; therefore, this discussion has been deleted.

The discussion of HF thermodynamics has been expanded, based on comments by reviewers, to include more information about the thermodynamic effects that can occur over time in an HF release (e.g., cooling of the cloud by aerosol evaporation).

EPA has incorporated information from reviewers into its description of available models and comparisons with spill tests. The discussion of SLAB and DEGADIS has been expanded to reference additional reports comparing model results to the Goldfish tests. The aerosol evaporation model added to SLAB is described briefly. Difficulties in interpretation of the DEGADIS results are discussed. A 1992 study comparing results of DEGADIS, SLAB, and other models to field test data is cited. Recent studies are cited showing that the latest version of HFSPRAY has improved capabilities for modeling water spray mitigation.

9.4 Worst-Case Accident Scenarios

This section has been expanded to include both worst-case scenarios, as mandated by Congress, and credible or reasonable worst-case scenarios for the types of facilities that handle HF. As recommended by reviewers, it is noted that caution must be used when reviewing consequence analysis results.

Reviewers provided extensive comments on EPA's modeling efforts. EPA is currently conducting additional modeling using HGSYSTEM, taking into account these comments. Such issues as averaging time and toxic dose will be addressed. EPA also is modifying the scenarios presented in the document based on comments by reviewers.

EPA has removed the discussion and modeling results using the ALOHA model as per comments received from reviewers and the SAB. EPA is including additional discussion and modeling results using the SLAB and DEGADIS models.

Chapter 10 - Community and Facility Emergency Preparedness and Planning

EPA has added an introductory paragraph to this chapter, explaining that the information is anecdotal and not intended to be comprehensive. Descriptions of specific industry/community programs have been corrected based on comments by reviewers. CMA's medical treatment emergency communication network pilot program and CHEMTREC are noted. EPA has added a new subsection describing EPA's Chemical Safety Audit program and discussing the recommendations made in Chemical Safety Audits of several facilities handling HF.

ED_002700_00005500-00211

Appendices

EPA has modified several of the appendices to the HF document based on comments by reviewers, as described below.

Appendix V - Overview of Probit Equations

Probit equation coefficients in this appendix have been corrected based on comments, and the appendix has been modified to include additional probit equations and results for several different exposure times. The discussion of probits has been modified to reflect information provided by reviewers.

Appendix VII - Facilities Reporting to TRI for Hydrogen Fluoride

This appendix has been updated by replacing 1989 data with 1990 data from TRI.

Appendix VIII - U.S. Producers of Fluorocarbons and of Other Chemicals Manufactured with Hydrogen Fluoride or Chlorofluorocarbons

Information on producers in this appendix has been corrected as appropriate (e.g., by changes to the list of types of fluorocarbons produced) based on comments by reviewers.

Appendix IX - U.S. and Canadian Petroleum Refineries with HF Alkylation Units

This appendix has been updated based on information provided by reviewers.

Appendix XI - Containers for Transportation of HF

Corrections have been made to this appendix based on information provided by reviewers (e.g., corrections to the description of tank car specifications).

ED_002700_00005500-00212

EXHIBIT II-1
Reviewers Who Commented on Draft Hydrogen Fluoride Report

Organization	Individual
Aluminum Association	Roy Carwile
3M	C.S. Chow
Lawrence Livermore National Laboratory	Ron Koopman
Mallinckrodt Specialty Chemicals Company	Thomas H. McFadden
U.S. Department of the Interior, Bureau of Mines	William L. Miller
Wayne State University	Daniel A. Crowl
SRI International	Ray Will
IBM	David Gunnarson
Hoechst Celanese	James L. Paul
Technica inc.	Krishna Mudan
MetroHealth	Steven Borron
National Petroleum Refiners Association (NPRA)	Norbert Dee
US. Environmental Protection Agency, Office of Pollution Prevention and Toxics	Scott Prothero
U.S. Environmental Protection Agency - Region V	Glenn Cekus
Marathon	Robert Mason
Rohm & Haas Company	Stanley J. Schecter
University of Louisville	George C. Rodgers, Jr.
ELF Atochem North America	John Laumer and Harold Lamb
Du Pont Chemicals	Carolyn S. Seringer
BP Oil	Charles E. Fryman
Chemical Manufacturers Association (CMA)	Gordon D. Strickland, F.S. Leiva
Ultramar inc.	Diane Sinclair
Mobil Oil Corporation	T.D. Cole
Vista Chemical Company	F.E. Linstead
Inter. Union of Electronic, Electrical, Salaried, Machine and Furniture Workers; Occupational Health Foundation	Scott Schneider
Working Group on Community Right-To-Know	Paul Orum
Brookhaven National Laboratory	Vasilis Fthenakis
South Coast Air Quality Management District	David Yeh
U.S. Department of Commerce, National Oceanic and Atmospheric Administration (NOAA)	Roy Overstreet
Amer. Petroleum institute (API) HF Alkylation Committee	Jeff Morris, Fina Oil and Chemical Company; Richard M. Gustafson, Texaco; Doug N. Blewitt
U.S. Environmental Protection Agency, Office of Air and Radiation	Jose Fernandez
Allied-Signal, inc.	William Hague and Robert Pratt
Allied-Signal, Inc. (modeling); and EPA Science Advisory Board, invited specialty expert	William Hague
Workers Board in British Columbia	Ian Solomon
Energy Safety Council	Edward V. Badolato and Keith M. Karnofsky
Kerr-McGee Corporation	Steven Emerson
Wacker Siltronic Corporation	Thomas C. McCue
Environment Canada	John Shrives
Phillips Petroleum Company	Barbara Price and Jeffrey M. Reamy

ED_002700_00005500-00213

EXHIBIT II-1
Reviewers Who Commented on Draft Hydrogen Fluoride Report
(Continued)

Organization	Individual
Texas Air Control Board	Sam Crowther
STRATCO, Inc.	Kenneth R. Masters
U.S. Department of Transportation	James O'Steen
HHS-CDC	Mark McClanahan
Friends of the Earth; and EPA Science Advisory Board, invited specialty expert	Dr. Fred Millar
Air Products and Chemicals, Inc.	Robert W. Ormsby
Bob Puschinsky, inc., Alkylation Technologies	Bob Puschinsky
University of Arkansas; and EPA Science Advisory Board, invited specialty expert	Dr. Jerry Havens
U.S. Environmental Protection Agency, Office of Pollution Prevention and Toxics	Gail Froiman
EPA Science Advisory Board, Chairman; and Union Carbide Corporation	Richard Conway
EPA Science Advisory Board, member; and University of Michigan	Dr. Linda Abrioia
EPA Science Advisory Board, member; and Michigan Department of Natural Resources	Dr. George Carpenter
EPA Science Advisory Board, member; and Oregon Department of Energy	Christin Ervin
EPA Science Advisory Board, member; and Pilko & Associates,	Dr. Wayne Kachei
EPA Science Advisory Board, member; and GeoTrans, Inc.	Dr. James Mercer
EPA Science Advisory Board, member; and Electric Power Research Institute	Dr. Ishwar Murarka
EPA Science Advisory Board, member; and University of Pittsburgh	Dr. Frederick Pohland
EPA Science Advisory Board, member; and GEI Consultants,	Dr. Robert Pojasek
EPA Science Advisory Board, member; and Stanford University	Dr. Paul Roberts
EPA Science Advisory Board, member; and Energy and Environmental Research Corporation	Dr. William Seeker
EPA Science Advisory Board, member; and Corporation on Resource Recovery and the Environment	Dr. Walter Shaub
EPA Science Advisory Board, member; and Rice University	Dr. Herb Ward
EPA Science Advisory Board, advisory staff	Dr. Jack Kooyoomjian
EPA Science Advisory Board, Staff Director	Dr. Donald Barnes

ED_002700_00005500-00214

This page intentionally left blank.

ED_002700_00005500-00215

APPENDIX III
SUMMARY OF ORAL AND WRITTEN COMMENTS FROM PUBLIC MEETING ON HYDROGEN FLUORIDE STUDY
July 12, 1993
EPA Auditorium, 401 M Street, SW, Washington, D.C.

On July 12, 1993, a public meeting was held to present and to discuss preliminary findings of the Hydrogen Fluoride Study. The preliminary findings, which were used to develop recommendations, were distributed to stakeholders prior to the meeting. Fourteen of the attendees presented their comments orally, and 15 interested parties submitted written comments. The Appendix contains a summary of comments and is not a verbatim transcript. Exhibit III-1 lists the reviewers who provided written comments.

ED_002700_00005500-00216

III.1 Summary of Oral Comments

Elaine Davies--EPA

Introduction and Background. The stakeholders' meeting held on October 17, 1991, focused on issues to be included in the report. Comments were incorporated into the report, and additional revisions were made per EPA's Science Advisory Board comments. A court-ordered deadline of September 30, 1993, has been set for the final report. The purpose of this public meeting is to receive technical comments on the findings, and relevant technical information which will be used to develop recommendations.

Ed Freedman--EPA

The meeting will end with a wrap-up. Significant changes to the report include expanded modeling input descriptions, and an expanded number of scenarios. Scenarios now include catastrophic vessel failure and others. Sensitivity analysis was done for certain assumptions. Consequence analysis is based on dose rather than concentration.

Major points of the findings:

Manufacture and use of HF present some risk to the public (depends on potential consequence and likelihood of occurrence).
Dispersion modeling of large scale catastrophic releases resulted in impacts at distances greater than 10 km.
Actual off-site releases are rare, no deaths to the public have occurred.
A number of controls, and many regulations, are in place; owner/operator must comply with the general duty clause to operate facilities safely. These controls should decrease the likelihood of accidents.
Emergency planners have limited preparation for HF accidents.

Barry Weissman--Director of Regulatory Affairs for Ausimont USA

His company is a plastics and fluoropolymer manufacturer in NJ, employing 97 people. Anhydrous HF has been used since 1989. Its use was registered with NJDEPE under the Toxic Catastrophe Prevention Act regulation issued in June 1988. Risk Management Plans (RMP) have been developed, and risk assessments have been performed. Ausimont follows manufacturer's recommendations in developing RMP/operations plans, and conducts preventive maintenance and yearly ultrasonic tank thickness inspections. Fully automated loading/unloading, and fully automated monitoring of vapors is being installed. The facility has fire monitors, and water curtains. Training is conducted for contractors, and an employee emergency response team. Access to areas with specified hazardous chemicals is limited. Ausimont has on-site wastewater treatment. Since 1989, there have been ten injuries and five releases. The largest release was 174 pounds, which was kept on-site through the use of water spray mitigation devices.

Safety costs money up-front, but saves money if it works. The speaker suggests keeping OSHA in mind, and asks that new regulations not be developed. He also suggests computer compatible forms, and simple record keeping.

Jeff Morris--American Petroleum Institute (API)

The speaker compliments EPA on the involvement of the stakeholders in the process of developing the HF report; the stakeholders have been able to make an impact. He asks that this involvement be continued.

ED_002700_00005500-00217

Generally, the findings are balanced and objective. The speaker would like to reinforce two points. First, he suggested that EPA focus on how process safety is managed; handling is important; techniques are critical (Le., API Recommended Practices 750, 751). Second, he suggested that EPA should recognize that these practices and the application of techniques are site specific.

Fred Millar-Friends of the Earth **(FOE)**

Given the limited time remaining, the speaker suggested that EPA look at Process Safety Management's (PSM) track record. The speaker has been looking at companies' involvement of employees in HazOps procedures, etc. He has interviewed workers-- their comments have varied. The speaker suggested that EPA examine if OSHA is ensuring compliance with PSM.

Geoff Kaiser--Science Applications International Corporation

The speaker has provided technical advice on HF in hazops, risk assessments, and PSM. The comments in the findings are sensible and wise. They emphasize that risks are reduced if facilities comply with the general duty clause, etc. The speaker has three points:

- Concerning risk being minimized by facility compliance with regulations regarding HF, 'or **any other hazardous substances:'** HF should be placed in perspective with other chemicals. Emphasis on existing regulations is helpful. Regulations provide a broad objective, but should allow varying ways to implement.
- Judgments of risk should not be based on analysis of consequences alone, likelihood of occurrence must also be considered. Judgments should be made in context of risk.
- The speaker does not believe that fatalities are possible beyond 10 km. His work has never found releases that went this far, especially not in urban settings.

William J. Hague--Allied-Signal

The speaker has several comments regarding the volatility of HF above its boiling point. Pressure must also be sufficient for HF to vaporize upon release. Allied-Signal has done experiments where HF autorefrigerates and a liquid pool forms at temperatures above the boiling point.

The speaker has comments regarding the increased potential dose posed by aerosol. Aerosol in a release is vaporized as the plume progresses, at approximately **10-20** meters. This increases potential dose because a greater source term is created.

The speaker notes a correction to the findings: heat of reaction is counteracted by dissociation, not by polymerization.

The speaker is concerned that we seem to tie worst-case scenario to worst-case consequences, EPA needs to look at maximum worst-case risks to public, and must look at likelihood of release. Emergency response should focus on events with some probability. A worst-case determination should address high probability, a combination of consequence and probability. [Craig Matthiessen asked for suggested approaches] The speaker suggests a matrix as presented in the Technical Guidance for Hazards Analysis document (also known as the Green Book). EPA should use the judgment of several people and focus on mitigation for reasonable cases that fit into the matrix.

Fred Millar--FOE

- The speaker stated that the study should be provided along with the findings.

ED_002700_00005500-00218

- The statement that HF is an essential compound goes beyond what should be said. Other compounds can be alternatives.
- The comment that a framework of additional future controls is being implemented is an overstatement. Industry has not been sufficiently surveyed.
- Compliance with "spirit" of existing regulations--this language should not be used, industry wants specific regulations.
- South Coast Air Quality Management District (SCAQMD) has not been given enough attention--EPA needs to evaluate further the effectiveness of **SCAQMD's** programs.
- The speaker suggests that the discussion of mitigation field tests is misleading. He would like to see information on the engineering uncertainty of water spray effectiveness. There is a lot of skepticism on real operating units. The speaker wants more information in the report on who is actually using these techniques. He would also like to see the results of any reliability tests.
- The speaker appreciates that information from safety audits was included, and wants more emphasis on this. He would like to review the study.
- The speaker would like to have access to documents on New Jersey's risk management rule.

William Hague--Allied-Signal

A lot has happened on water spray mitigation technology. The original tests were in a closed chamber but correlate with the earlier 1986 and 1987 tests. Although a **40-1** water to vapor ratio achieved 90% effectiveness in an operating tunnel, this tunnel is not optimal. 20-l may also be just as effective. Work is ongoing.

Jerry Havens--University of Arkansas

This is an important study because it will set precedents with respect to consideration of hazardous chemicals in commerce and how to consider risk of chemicals and their use. It is the first time a particular chemical has been singled out. The speaker emphasizes that it is incorrect to base analysis on probability or consequence separately; there is no logical, rational basis for evaluating risk to public without considering both. There is a danger in addressing consequence and risk together, the two can't be mixed. When people talk about likelihood, the importance of consequence is dismissed because of improbability. The importance of consequences of highly improbably accidents should not be dismissed; one should be fully aware of the potential severity of accidents.

The speaker has two specific comments on the findings. First, the statement about aerosols posing a greater hazard does not mention a principal reason for concern--that the cloud will be much heavier than air. Second, the issue of complex terrain continues to be researched. Consequence assessment presents a lot of information, all over idealized flat terrain. The question is how to use those tools to assess consequences in urban setting. EPA should include some mention of the fact that we do not know enough about the influence of terrain on consequences.

Charles Barrett--Oil, Chemical, and Atomic Workers International Union (OCAWIU)

The speaker's main concern is the importance placed on OSHA's PSM standard. This report gives the impression it is going well. OCAWIU's impression is that it is behind schedule. The importance of worker involvement needs to be emphasized. Unless worker involvement provisions are adhered to, we won't see what's going on with compliance. There is no specific requirement for training workers on the full nature of PSM standard. Unless training encompasses the entire standard, workers will be lost as aides to enforcement. A company often hand picks the people to be in charge of these areas and does not always make the best choice. The training of contractors in no way equals that which workers receive. The speaker asks that workers be surveyed on problems of contractor knowledge/training.

ED_002700_00005500-00219

Very few companies are involving workers. We need to look at PSM in more detail. Labor, environment, and communities need to analyze PSM. EPA should look at PSM plans in more detail, and have an oversight committee on compliance with PSM. The report appears to say that PSM is working, and that the standard is being enforced.

Ed Freedman-EPA

The speaker asked if these comments have been shared with OSHA. [answer: yes] The HF report says success is conditional on PSM being applied properly. EPA has not found that everybody is in compliance with regulatory standards.

Henry Jones--OCAWIU--BP Refinery

It is important to have worker involvement in PSM. OSHA often dismisses health and safety concerns. Workers are needed to oversee PSM because OSHA will not. Workers tend to overlook problems and cannot follow through. They fear for retribution, or fear that plants will be closed down. Workers need to follow up on oversight. At BP, employee involvement has improved safety. Workers are holding 8 hour safety sessions, PSM cannot work without worker involvement, even then it will be a struggle.

Statistics show contractors have more accidents than plant workers per man-hour. At BP, training for contractors is done by contractors; they should have more contact with local workers. Loss of mechanical integrity is perhaps the single most frequent cause of releases and accidents. At BP, they have a full-time inspector for HF. Companies should have properly trained people to do the job.
The speaker states that workers are beginning to be asked to report problems. He asks that LEPCs be given more funding.

Vince Morroni--OCAWIU member

The speaker, who has been a Chevron alkylation unit operator for 17 years, reaffirms the importance of worker involvement. Equipment integrity is often compromised by testing of equipment by operators, rather than trained technicians. Operation of water mitigation systems is not sufficiently tested.

Craig Matthiessen & Ed Freedman-EPA

The report is scheduled to be finalized by Sept. 30. EPA will not have time to distribute a new draft. The next step is to incorporate comments into the findings, and use findings to develop recommendations. The report will go through the Agency approval process.

Jerry Havens--University of Arkansas

The speaker suggests holding another stakeholder review. The report and findings need to be reviewed together. The review process is procedurally weak.

William Hague--Allied-Signal

A previous EPA technical report was full of problems. Could an addendum be issued if technical inaccuracies exist in HF report?

ED_002700_00005500-00220

Craig Matthiessen-EPA

EPA would consider having an addendum/follow-up report. International feedback is expected.

Jerry Havens-University of Arkansas

Congress should be made aware that an addendum/response may possibly follow.

Craig Matthiessen-EPA

The speaker notes that this is a good point,

Fred Millar--F.O.E.

France (SNPE) has done the only other HF study. Where is it?

Craig Matthiessen-EPA

A Canadian life-cycle analysis HF study is also being done. The speaker thinks the SNPE study is on-going.

Bill Hillier--M.W. Kellogg Co.

The speaker has no basic disagreement with broad findings. He suggests an addition to [the former] section 9.2 on substitution and modification, regarding M.W. Kellogg's development of an alkylation process (per written comments).

Mike Moosemiller--Technica

The speaker reiterated that PSM is involved in a lot of HF discussion. PSM involves engineering systems. A lot of money is being spent. The speaker would like EPA to take a broader perspective. EPA should look at management practices, inspection systems, contractors, and mechanical integrity. Flexibility is needed to allow people to come to the most effective realization of their limited resources,

Jeff Morris--API

The speaker almost entirely supports the OCAWIU speakers, and recognizes that enlightened management and employees are needed. We are changing the way we think about and operate refineries; some are farther along than others, Business and workers need to work together; need to protect jobs, environment, safety of workers and public, PSM is the proper way to be successful in this business; API endorses PSM techniques, It is important to be cognizant of realities in moving from where we are to where we want to be--difficult balancing act.

The speaker is concerned that the worst-case scenario discussion in the report could be taken out of context, He reserves the right to address the worst-case discussion in the report. The speaker registers concern on not being able to see the report,

ED_002700_00005500-00221

Fred Millar--FOE

OSHA does not have written model plans of action, nor does Chemical Manufacturers Association or the American Petroleum Institute. What good is the program without a model? There's a risk that PSM is not being taken seriously if people don't have a model and no measures exist on the early effectiveness of PSM.

Did the HF study look at whether facilities have catastrophic insurance? Are there small, "mom and pop" facilities that may go out of business because they are not adequately insured?

Craig Matthiessen--EPA

That topic was not examined in this study. Another EPA study looked at the role of insurance companies.

Coriolana Simon--EPA Chemical Accident Prevention staff

There were no conclusions from that study; the results were contradictory. It was clear that the insurance industry does not want to be a surrogate regulator.

Chuck Galloway--Chevron East Coast

The speaker notes that Chevron will respond in writing to answer the OCAWIU member's concerns regarding the water mitigation system that is being installed at an alkylation unit,

Chuck Barbell--Refractories Institute

The speaker expresses his concern about this regulatory process. EPA has gone back and forth on what is required. Industry doesn't have a chance to do what they've planned. This report will go to Congress, and they will make laws based on it.

Craig Matthiessen--EPA

The speaker assures the commenter that this is not a regulatory process, Any regulation that would be under other sections of CAA, would require a proposed rule, public comment, etc. EPA realized the importance early on to develop a technically accurate report. There are no hidden regulations in the report's recommendations. There is a possibility that Congress may make decisions based on the report, therefore EPA had to be very careful.

EPA wants all issues documented, wanted to have dialogue, and review of the report. EPA would like to have more time. EPA wants to get the report out, and put any comments, changes in an addendum. The speaker wants all written comments on the preliminary findings by COB Monday (today).

The speaker has heard that there are concerns about PSM, and will try to get a better understanding of these issues. Worst-case is also a hot issue. EPA shares the concerns expressed, and hopes to consider all these issues, and provide a sensible and best path forward on Risk Management Plan.

ED_002700_00005500-00222

III.2 Summary of Written Comments

Allied-Signal--William J. Haque

The commenter clarifies that the dense gas behavior of HF is due to temperature gradients in the plume, and to the presence of aerosol. He also notes that the limitation of the LEPCs in planning for transportation incidents is not unique to HF.

American Petroleum Institute--C.J. Krambuhl

API supports the findings that 1) the risks of HF release are site-specific and can be mitigated by PSM practices, and 2) further knowledge may be gained with respect to alternatives to HF acid. The commenter emphasized that HF be considered in perspective with other hazardous substances. He proposes using the term "associated" rather than "polymerized" to describe the behavior of HF molecules. EPA should emphasize the usefulness of modeling for PSM efforts.

Ausimont, USA--Barry Weissman

This reviewer's comments were made in the oral presentation summarized above. Written attachments included the requirements of New Jersey's risk management plan (RMP), injuries/releases at the facility due to HF, and risk assessments and hazard analysis reports required by NJ's Toxic Catastrophe Prevention Act.

BP Oil--Chuck Fryman

The commenter suggests that publishing the entire draft report, including findings and recommendations, will ensure that all stakeholders' comments have been considered. He would like to see more emphasis on the prevention aspects of HF risk management. The commenter wants EPA to emphasize that no deaths to the public have occurred due to HF exposure in the more than 50-year operating history of HF alkylation plants, EPA should mention the work underway to develop HF aerosol inhibitors, as well as the costs associated with conversion from HF to sulfuric acid. EPA should emphasize HF's hazards relative to those of other dangerous substances like chlorine and ammonia. The commenter noted that site-specific factors must be evaluated to determine the appropriateness of installing specific detection and mitigation measures.

Chemical Manufacturers Association (CMA)-Joe J. Mayhew

CMA notes that little is gained by the development and application of consequence analysis which stacks simplistic assumptions. CMA emphasizes that the likelihood of occurrence must be tied to consequence analysis. The commenter is concerned that a revised draft was not made available to reviewers with the findings. He made several suggestions advocating the use of site-specific and technical information in analyzing worst-case scenarios, especially as these related to the RMP rulemaking. The commenter suggests that EPA allow the use of realistic and relevant levels of concern in consequence analysis,

Chevron--Don E. Tormey

The commenter responded to Vince Morroni of OCAWIU's concerns regarding equipment operation at a Chevron Phillips alkylation unit, He described the use, installation, and testing of HF detectors and a water spray system at the refinery.

ED_002700_00005500-00223

Hoechst-Celanese--James L. Paul Ph.D.

The commenter strongly supports CMA's comments dealing with worst-case scenario and implications for EPA's forthcoming RMP rulemaking.

Lawrence Livermore National Laboratory-Ronald P. Koopman

The commenter found no errors or problems with the preliminary findings.

Marathon Oil Company--Ned F. Seppi

The commenter asked for clarification of the reference in the findings of a "framework for additional future controls." He suggested that EPA mention the greater transportation requirements associated with sulfuric acid alkylation, due to higher acid consumption, if regeneration is not available on-site. The commenter suggests changing the term "polymerize" to "aerosolize" with respect to HF molecule behavior. He requests clarification of "aqueous solutions" in terms of weight percent HF.

M.W. Kellogg--William J. Hillier

The commenter provided a description of a 'next generation alkylation process' under development by Kellogg and Topsoe for commercial use, which could be appropriately included in the Substitution and Modification section of the final report.

Oil, Chemical, and Atomic Workers International Union (OCAWIU)--Charles Barrett

OCAWIU encourages EPA to recommend incorporation of preventive measures of adequate spacing between alkylation units along with continuous gas detection systems. Other written comments were reflected in the oral presentation, summarized in section 111.1.

Phillips Petroleum Company-Barbara J. Price

The commenter expressed support for the findings, and for the decision to evaluate HF from a risk management view point rather than simply hazard avoidance. She asks that EPA emphasize that HF is like many other extremely hazardous substances. The commenter suggests that EPA include in the findings a section on the valuable contributions of HF products to the U.S. manufacturing industry and the public. She questions the appropriateness and necessity of using the term "severe' to describe the results of a possible HF release. The commenter emphasizes that factors determining the movement and potential hazards of an HF vapor plume are complex, and time- and site-specific. She requests that EPA give a low-range estimate, along with the high-range estimates presented, of populations located near facilities which handle HF. The commenter emphasizes the usefulness of model results in the development of PSM efforts. She asks that EPA note that HF containment failures with off-site consequences are extremely rare. The commenter asks that EPA revise its conclusion that not all facilities have adopted detection and mitigation measures, and instead state that not all facilities have undertaken analyses to determine what measures may be necessary.

Science Applications International Corporation--Geoff Kaiser

The commenter clarified that under certain conditions HF may form liquid droplets which can become airborne. He wanted clarification regarding the impact of release consequences and the basis of priorities for emergency planning. Regarding water spray mitigation systems, he added that the cited 90% reduction in HF flow has been achieved for 40:1 water:HF ratios, but that higher reductions have occurred for higher ratios,

ED_002700_00005500-00224

South Coast Air Quality Management District--David Yeh, Ph.D.

The commenter requests that EPA disclose the concentration level assumed for the "severe impacts" cited in the findings. With respect to stability level, EPA should clarify what is meant by 'long periods of time," and note that F stability may not be worst-case in all. situations. The commenter asks that EPA note that releases of sulfuric acid under alkylation conditions have generated a small amount of aerosol (not greater than 7 percent).

STRATCO--Kenneth R. Masters

The commenter suggests that all references to sulfuric acid be deleted from the Preliminary Findings and the final report. STRATCO notes that the transportation requirements for sulfuric alkylation do not translate into greater transportation hazards. EPA should not comment on conversion from an HF alkylation unit to a sulfuric acid unit when EPA has chosen not to include a direct comparison of sulfuric acid and HF in the final report.

ED_002700_00005500-00225

EXHIBIT III-1
Reviewers Who Submitted Written Comments on the Preliminary Findings

Organization	Individual
Allied-Signal	William J. Hague
American Petroleum Institute	C.J. Krambuhl
Ausimont, USA	Barry Weissman
BP Oil	Chuck Fryman
Chemical Manufacturers Association	Joe J. Mayhew
Chevron	Don E. Tormey
Hoechst-Celanese	James L. Paul, Ph.D.
Lawrence Livermore National Laboratory	Ronald P. Koopman
Marathon Oil Company	Ned F. Seppi
M.W. Kellogg Company	William J. Hillier
Oil, Chemical & Atomic Workers international Union	Charles Barrett
Phillips Petroleum Company	Barbara J. Price
Science Applications international Company	Geoff Kaiser
South Coast Air Quality Management District	David Yeh, Ph.D.
STRATCO	Kenneth R. Masters

ED_002700_00005500-00226

This page intentionally left blank.

ED_002700_00005500-00227

APPENDIX IV
EXPOSURE LEVELS FOR HYDROGEN FLUORIDE

A number of regulatory and guideline exposure levels have been developed for HF and other toxic substances. Some of these levels are discussed below. Exhibit IV-I (next page) presents a comparison of some exposure levels for HF with those for other toxic substances. A method for estimating reference exposure levels for HF, and the levels derived based on that method, are also discussed in this appendix, following the exhibit.

- **IDLH.** The Immediately Dangerous to Life or Health (IDLH) level, developed by the National Institute for Occupational Safety and Health (NIOSH), represents the maximum concentration from which one could escape within 30 minutes without any escape-impairing symptoms or any irreversible health effects.'

- **EEGL.** The National Research Council (NRC) of the National Academy of Sciences (NAS) has developed the Emergency Exposure Guidance Level (EEGL), defined as a concentration of a substance in air judged to be acceptable for the performance of specific tasks by military personnel during emergency conditions, usually lasting one hour. The EEGLs are based primarily on acute toxicity. The NRC has also developed Short-Term Public Exposure Guidance Levels (SPEGLs), defined as ceiling concentrations for a single, unpredicted short-term exposure to the public, for a few chemicals; however, no EEGL or SPEGL has been developed for HF.

- **ERPG.** Emergency Response Planning Guidelines (ERPGs) have been developed for a limited number of chemicals by the American Industrial Hygiene Association (AIHA). The ERPGs are based on primarily on acute toxicity data and possible long-term effects from short-term exposure.

  - The **ERPG-1** is defined as the concentration below which nearly all people could be exposed for one hour with only mild, transient adverse health effects or an objectionable odor.

  - The **ERPG-2** is the concentration below which nearly all people could be exposed for one hour without irreversible or other serious health effects or symptoms that would impair their ability to take protective action.

  - The **ERPG-3** is defined as the maximum concentration in air below which nearly all people could be exposed for one hour without life-threatening health effects.

- **OSHA PEL.** The Occupational Safety and Health Administration (OSHA) has developed Permissible Exposure Limits (PELs), enforceable by law, for worker exposure to substances listed as air contaminants (29 CFR Part 1910). For most listed chemicals, eight-hour time weighted average (TWA) concentrations that cannot be exceeded in an eight hour work day, are specified. In addition, for some chemicals, OSHA has developed Short-Term Exposure Limits (STELs), 15-minute time weighted averages that cannot be exceeded at any time during a work day, and ceilings, levels that cannot be exceeded at any time during the work day. The PELs are developed for the protection of worker health, and are based on consideration of health effects and economic and technological feasibility.

ED_002700_00005500-00228

EXHIBIT IV-1
Comparison of Regulatory and Guideline Exposure Levels for HF and Other Toxic Substances

CAS No.	Chemical Name	NIOSH IDLH (30 minutes)	NAS EEGL (1 hour)	AIHA ERPG-3 (1 hour)	OSHA PEL (8-hr TWA except as noted)
7664-39-3	Hydrogen Fluoride	30 ppm (25 mg/m^3)		50 ppm (41 mg/m^3)	3 ppm (2.6 mg/m^3)
766441-7	Ammonia	500 ppm (348 mg/m^3)		1000 ppm (695 mg/m^3)	STEL: 35 ppm (27 mg/m^3)
7782-50-5	Chlorine	30 ppm (87 mg/m^3)	3 ppm (9 mg/m^3)	20 ppm (58 mg/m^3)	0.5 ppm (1.5 mg/m^3) STEL: 1 ppm (3 mg/m^3)
7647-01-0	Hydrogen Chloride	100 ppm (149 mg/m^3)	20 ppm (30 mg/m^3)	100 ppm (149 mg/m^3)	Ceiling: 5 ppm (7 mg/m^3)
75-44-5	Phosgene	2 ppm (8 mg/m^3)	0.2 ppm (0.8 mg/m^3)	1 ppm (4 mg/m^3)	0.1 ppm (0.4 mg/m^3)
7446-09-5	Sulfur Dioxide	100 ppm (262 mg/m^3)	10 ppm (26 mg/m^3)	15 ppm (39 mg/m^3)	2 ppm (5 mg/m^3) STEL: 5 ppm (10 mg/m^3)
7664-93-9	Sulfuric Acid	20 ppm (80 mg/m^{3*})	0.25 ppm (1 mg/m^{3*})	7 ppm (30 mg/m^{3*})	0.25 ppm (1 mg/m^{3*})

* Listed as mg/m^3 rather than ppm.

Sources: National Institute of Occupational Safety and Health
National Academy of Sciences
America Industrial Hygiene Association
Occupational Safety and Health Administration

ED_002700_00005500-00229

Reference Exposure Levels Developed Using a "Benchmark Dose" Approach. Researchers at the California Environmental Protection Agency[2] have developed reference exposure levels (RELs) for HF for protection of the public. The exposure levels were developed from existing toxicological data on animals and humans, Log-probit extrapolation of available sets of concentration-response data was employed to estimate a Practical Threshold (PT), defined as a "benchmark dose" estimated to produce one percent response, specific to each set of data. A set of data-specific factors were developed to account for species sensitivity, response severity, and slope differences among the available concentration-response data, and RELs were estimated from each data set. The "best" REL estimates were chosen based on the relative reliability of the test data used to derive the RELs. Using this method, the one-hour reference exposure level to protect the public against any irritation from a routine emission (REL-1) is 0.7 ppm and the level to protect against severe irritation from a once-in-a-lifetime release (REL-2) is 2 ppm. These levels of exposure are not industry or government standards.

ED_002700_00005500-00230

ENDNOTE

1. U.S. Department of Health and Human Services, *NIOSH Pocket Guide to Chemical Hazards,* Centers for Disease Control, National Institute for Occupational Safety and Health, Washington, D.C., June 1990. (362)

2. Alexeeff, George V., David C. Lewis, and Nancy L. Ragle, "Estimation of Potential Health Effects from Acute Exposure to Hydrogen Fluoride Using a 'Benchmark Dose' Approach," *Risk Analysis,* February 1993, p 63-69.

APPENDIX V
OVERVIEW OF PROBIT EQUATIONS

This appendix presents an overview of **probit** equations and their application to releases of HF. Several probit equations developed for HF are presented. EPA has not reviewed the data or methodology used to develop these equations and is not endorsing a particular equation or method. This appendix is presented for information purposes only.

Probit (probability unit functions are used to determine statistical probability of an effect. The probit is a unit of measurement of statistical probability based on deviation from the mean of a normal distribution. A **probit** function takes the following form:[1]

$$Pr = a + b \log_e V$$

where: Pr is a measure of the percent of the vulnerable resource affected;
V is a function of the factor that causes injury or damage to the vulnerable resource;
a is a location parameter; and
b is a slope parameter.

Probit functions are applicable to various types of incidents, including fires and explosions as well as toxic releases. They can be used to develop a probability distribution of consequences for such incidents. **Probit** functions can be used to quantify the number of fatalities that are likely to occur from a given exposure to a toxic chemical in cases where there is information on dose-response relationships. Toxicity probit equations are applicable to cases of non-linear as well as linear dose-response relationships. Toxicity **probit** equations can be used in conjunction with dispersion models that take exposure duration into account to predict fatality levels at various locations based on the results of dispersion modeling. The **probit** function for a toxic exposure is a logarithmic expression of the form:[2]

$$Pr = a + b \log_e (C^n t)$$

where: a, b, and n are constants;
C = concentration; and
t = exposure time.

The term $C^n t$ is the "toxic load," which provides a measure of the effect of exposure to the chemical as a function of concentration and duration of exposure. The toxic effect considered in probit analysis is lethality. An exponent (n) of one indicates that the effect of exposure to the chemical is directly related to concentration times duration of exposure: i.e., exposure to a concentration of **10** ppm for 30 minutes would have the same effect as exposure to 300 ppm for one minute.

The probit function is used along with a standard **probit** table to relate chemical concentration and duration of exposure to the estimated percentages of people affected or estimated number of fatalities. A standard **probit** table is shown in Exhibit V-1.

ED_002700_00005500-00232

EXHIBIT V-I
Probit Table

%	0	1	2	3	4	5	6	7	8	9
0	--	2.67	2.95	3.12	3.25	3.36	3.45	3.52	3.59	3.66
10	3.72	3.77	3.82	3.87	3.92	3.96	4.01	4.05	4.08	4.12
20	4.16	4.19	4.23	4.26	4.29	4.33	4.36	4.39	4.42	4.45
30	4.48	4.50	4.53	4.56	4.59	4.61	4.64	4.67	4.69	4.72
40	4.75	4.77	4.80	4.82	4.85	4.87	4.90	4.92	4.95	4.97
50	5.00	5.03	5.05	5.08	5.10	5.13	5.15	5.18	5.20	5.23
60	5.25	5.28	5.31	5.33	5.36	5.39	5.41	5.44	5.47	5.50
70	5.52	5.55	5.58	5.61	5.64	5.67	5.71	5.74	5.77	5.81
80	5.84	5.88	5.92	5.95	5.99	6.04	6.08	6.13	6.18	6.23
90	6.28	6.34	6.41	6.48	6.55	6.64	6.75	6.88	7.05	7.33
__	0.0	0.1	0.2	0.3	0.4	0.5	0.6	0.7	0.8	0.9
99	7.33	7.37	7.41	7.46	7.51	7.58	7.65	7.75	7.88	8.09

Probits are the three digit numbers in the table. Percents are read along the top and side margin of the table. The vertical column of percents gives the decade; the horizontal column gives the unit, The table entry appearing in the row of the decade value and the column of the unit value is the **probit** corresponding to that percent. The last two rows in the table provide a finer reading for very high percent, from 99.0 to 99.9. The second to last row is the tenths of percent to be added to 99%. The last row consists of the corresponding **probits.**

Source: Eisenberg, et al., *Vulnerability Model: A Simulation System for Assessing Damage Resulting from Marine Spills*, Springfield, VA, NTIS, 1975.

ED_002700_00005500-00233

Several probit equations have been reported for HF. The values of a, b, and n derived for four different **probit equations**[3,4,5,6] are presented in Exhibit V-2.

The results of the probit analysis vary depending on the coefficients used in the equation. Exhibit V-3 shows the concentrations calculated to produce one percent, 10 percent, and 50 percent fatality for a five-minute exposure, based on **probits** calculated using the coefficients presented in Exhibit V-2 for four different probit equations and the probit table in **Exhibit** V-1. Exhibits V-4 and V-5 show the concentrations calculated to lead to the same fatality levels for 30-minute and **60-minute** exposure durations. The highest and lowest concentrations estimated to cause one percent fatality differ by a factor of nearly 12 for an exposure time of five minutes, while the highest and lowest concentrations estimated to cause 50 percent fatality for any of the exposure times considered differ by a factor of about six. The de Weger and ten Berge probit equations use similar coefficients (see Exhibit V-2) and give generally similar results. The **Mudan** equation and the Perry and Articola equation both assume a linear relationship between exposure time and effect of exposure (i.e., n=1); however, the coefficient *a* for the **Mudan** equation is nearly twice as large as that for the Perry and Articola equation. Use of the **Mudan** equation results in consistently higher concentrations than the Perry and Articola equation.

Data from animal experiments are usually used to derive **probit** equations, which are based on lines of best fit to experimental data. Animal experiments are usually done on rats or mice, but other animal species may also be used. The variation in toxic effects between different species may be substantial. In addition, there is no definitive correlation between human and animal responses, which may vary widely depending on the substance tested.

Probits **exhibit** difficulties similar to those encountered in more generic attempts at modeling human toxic responses; e.g., lack of data and difficulty in extrapolation of animal data to humans. Additionally, care must be taken in applying a probit relationship; a common mistake is extrapolating the **probit** relationship outside of the original **data.**[7] **Probit** analysis is weakest when applied to prediction of toxic loads that would affect only small percentages of the population;' hazard assessments often require such predictions.

The **IDLH** level of 30 ppm, intended to represent the level from which people could escape within 30 minutes without suffering escape-impairing symptoms or irreversible health effects, is considerably lower (by factors of about six to 40) than the concentrations estimated from the four **probit** equations for one percent fatality from a 30-minute exposure (see **Exhibit** V-4). This result is consistent with the definition of the **IDLH**. The **ERPG-3** value of 50 ppm, intended to represent the level to which nearly all people could be exposed for one hour without life-threatening effects, is relatively close to the lowest concentration (63 ppm) calculated to cause one percent fatality from a 60-minute exposure, based on the Perry and Articola probit equation (see **Exhibit** V-5). The three other **probit** equations give higher concentration levels for one percent fatality from a 60-minute exposure (2.5 to 12 times the ERPG-3).

EXHIBIT V-2
Coefficients for Four Probit Equations

Source of Probit Equation	a	b	n	Units
Mudan	-48.33	4.853	1	ppm
Perry and Articola	-25.8689	3.3545	1	ppm
de Weger	-8.4	1	1.5	mg/m^3
ten Berge	-7.35	0.71	2	mg/m^3

Sources: Mudan, Krishna S., *Acute Inhalation Toxicity of Hydrogen Fluoride,* AIChE Summer Annual Meeting, Philadelphia, August 24-26, 1969.
Perry, W.W., and W.P. Articola, *Study to Modify the Vulnerability Model of the Risk Management System,* Prepared for U.S. Department of Transponation, U.S. Coast Guard, Washington, DC., 1960.
de Weger, Dik, Chris M. Pietersen, and Paul G.J. Reuzel, 'Consequences of Exposure to Toxic Gases Following Industrial Disasters,' *Journal of Loss Prevention in the Process Industries,* Volume 4, July 1999

ten Berge, W.F., A. Zwart, and L.M. Appelman, 'Concentration-Time Mortality Response Relationship of Irritant and Systemically Acting Vapours and Gases,' *Journal of Hazardous* Materials, Volume 13, 1986, pp 301-30s.

EXHIBIT V-3
Results Based on Several Probit Equations for Five-Minute Exposures

Source of Probit Equation	Concentration for 1% Fatality		Concentration for 10% Fatality		Concentration for 50% Fatality	
	ppm	mg/m^3	ppm	mg/m^3	ppm	mg/m^3
Mudan	7,328	5,982	9,099	7,428	11,845	9,669
Perry and Articola	990	809	1,355	1,106	1,984	1,620
de Weger	672	548	1,353	1,104	3,176	2,592
ten Berge	636	519	1,331	1,087	3,279	2,677

Sources: Mudan, Krishna S., *Acute Inhalation Toxicity of Hydrogen Fluoride,* AIChE Summer Annual Meeting, Philadelphia, August 24-26, 1969.
Perry, W.W., and W.P. Articola, *Study to Modify the Vulnerability Model of the Risk Management System,* Prepared for U.S. Department of Transportation, U.S. Coast Guard, Washington, DC., 1960.
de Weger, Dik, Chris M. Pietersen, and Paul G.J. Reuzel, 'Consequences of Exposure to Toxic Gases Following Industrial Disasters," *Journal of Loss Prevention in the Process Industries,* Volume 4, July 1991.
ten Berge, W.F., A. Zwart, and L.M. Appelman, 'Concentration-Time Mortality Response Relationship of Irritant and Systemically Acting Vapours and Gases,' *Journal of Hazardous Materials,* Volume 13, 1986, pp 301-30s.

ED_002700_00005500-00235

EXHIBIT V-4
Results Based on Several Probit Equations for 30-Minute Exposures

Source of Probit Equation	Concentration for 1% Fatality		Concentration for 10% Fatality		Concentration for 50% Fatality	
	ppm	mg/m^3	ppm	mg/m^3	ppm	mg/m^3
Mudan	1,221	997	1,516	1,238	1,974	1,612
Perry and Articola	165	135	226	184	331	270
de Weger	203	166	410	334	961	785
ten Berge	259	212	543	444	1,338	1,093

Sources: Mudan, Krishna S., *Acute Inhalation Toxicity of Hydrogen Fluoride,* AIChE Summer Annual Meeting, Philadelphia, August 24-26, 1989.
Perry, W.W., and W.P. Articola, *Study to Modify the Vulnerability Model of the Risk Management System,* Prepared for U.S. Department of Transportation, U.S. Coast Guard, Washington, DC., 1960.
de Weger, Dik, Chris M. Pietersen, and Paul G.J. Reuzel, "Consequences of Exposure to Toxic Gases Following Industrial Disasters,' *Journal of Loss Prevention in the Process Industries,* Volume 4, July 1991.
ten Berge, W.F., A. Zwart, and L.M. Appelman, "Concentration-Time Mortality Response Relationship of Irritant and Systemically Acting Vapours and Gases,' *Journal of Hazardous Materials,* Volume 13, 1986, pp 301-309.

EXHIBIT V-5
Results Based on Several Probit Equations for 60-Minute Exposures

Source of Probit Equation	Concentration for 1% Fatality		Concentration for 10% Fatality		Concentration for 50% Fatality	
	ppm	mg/m^3	ppm	mg/m^3	ppm	mg/m^3
Mudan	611	499	758	619	987	806
Perry and Articola	83	67	113	92	165	135
de Weger	128	105	258	211	606	495
ten Berge	183	150	384	314	945	773

Sources: Mudan, Krishna S., *Acute Inhalation Toxicity of Hydrogen Fluoride,* AIChE Summer Annual Meeting, Philadelphia, August 24-26, 1989.
Perry, *W.W.,* and W.P. Articola, *Study to Modify the Vulnerability Model of the Risk Management System,* Prepared for U.S. Department of Transportation, U.S. Coast Guard, Washington, DC., 1980.
de Weger, Dik, Chris M. Pietersen, and Paul G.J. Reuzel, 'Consequences of Exposure to Toxic Gases Following Industrial Disasters,' *Journal of Loss Prevention in r/re Process Industries,* Volume 4, July 1991.
ten Berge, W.F., A. Zwart, and L.M. Appelman, 'Concentration-Time Mortality Response Relationship of Irritant and Systemically Acting Vapours and Gases,' *Journal of Hazardous Materials,* Volume 13, 1986, pp 301-309.

ED_002700_00005500-00236

ENDNOTES

1. Eisenberg, Norman A., Cornelius J. Lynch, Roger J. Breeding, *Vulnerability Mode/, A Simulation System for Assessing Damage Resulting From Marine Spills,* Enviro Control, Incorporated, Rockville, MD, June 1975, Document Number **AD-A01** 5245. Prepared for U.S. Coast Guard, Washington, D.C. (139.513)

2. American Institute of Chemical Engineers, *Guidelines for Chemical Process Quantitative Risk Analysis,* Center for Chemical Process Safety, New York, 1989. (10.46)

3. **Mudan**, Krishna *S., Acute* ***Inhalation*** *Toxicity of Hydrogen Fluoride,* **AIChE** Summer Annual Meeting, Philadelphia, August 24-26, 1989. (360)

4. Perry, W.W., and W.P. Articola, *Study* ***to*** *Modify* ***the*** Vulnerability Model of ***the*** *Risk* Management *System,* Prepared for U.S. Department of Transportation, U.S. Coast Guard, Washington, DC., 1980, No. CG-D-22-80. (489.91)

5. de Weger, Dik, Chris M. Pietersen, and Paul G.J. Reuzel, "Consequences of Exposure to Toxic Gases Following Industrial Disasters,' *Journal of Loss Prevention in the Process Industries,* Volume 4, July 1991, p 272. (502)

6. ten Berge, W.F., A. Zwart, and L.M. Appelman, "Concentration-Time Mortality Response Relationship of Irritant and Systemically Acting **Vapours** and Gases," *Journal of Hazardous Materials,* Volume 13, 1986, pp **301**. (54.5)

7. Gustafson, Richard M., Texaco Inc., comments from technical review of *Hydrogen Fluoride Study, Report* to *Congress,* Draft May 8, 1992, May 29, 1992. (344, Appendix 1)

8. Chikhliwala, E.D., "Extensions of Consequence Analysis," 6th *SAFER/TRACE Users Meeting,* San Antonio, TX, September 1991. (121)

APPENDIX VI
EXAMPLE OF MEDICAL TREATMENT GUIDELINES FROM A HYDROGEN FLUORIDE PRODUCER

This appendix presents medical and first aid treatments for exposure to HF recommended by Allied-Signal.

ED_002700_00005500-00238

Recommended Medical Treatment for Hydrofluoric Acid Exposure

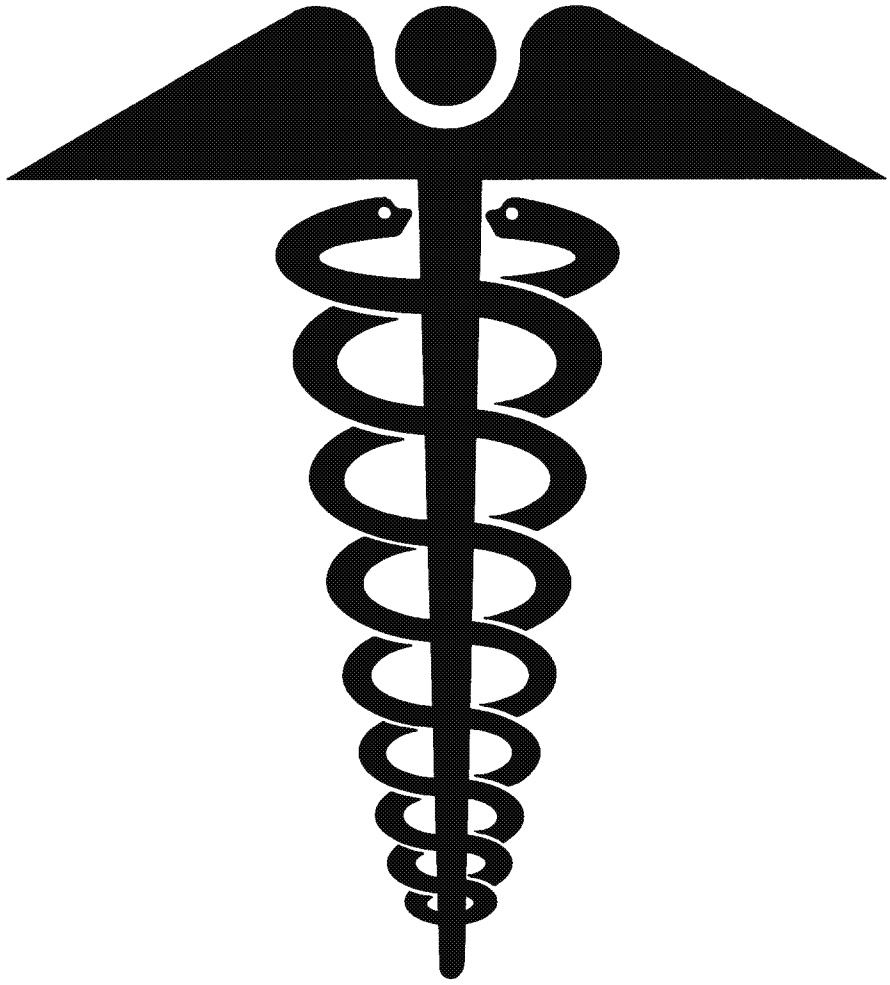

The HF Products Group

Allied Signal

Hydrofloric Acid Treatment Quick Reference Chart

FOLD HERE

This Booklet describes the special First Aid and Medical Treatment measures necessary following exposure to or injury from HYDROFLUORIC ACID.

However, it must be emphasized that

PREVENTION

of exposure or injury must be the primary goal.

Preventive measures include making sure that:

1. Everyone who handles or uses HF is aware of its properties and dangers.
2. Everyone handling or using HF is trained in proper handling and safety precautions.
3. All appropriate engineering controls are in place, are maintained, are functioning properly, and are utilized.
4. Everyone who handles or uses HF has available, knows how to use, and is required to use appropriate safety and personal protective equipment.
5. Arrangements are made ahead of time to provide first aid or medical treatment measures if necessary.

If additional information is necessary, you should write to:

Technical Service Manager - Hydrofluoric Acid
Allied-Signal Inc.
P.O. **Box 1053**
101 Columbia Road
Morristown, New Jersey 07962-1053

Treatment of Hydrofluoric Acid Exposure[1]

	Skin Burns		Eye Exposure	Inhalation		Ingestion
	Conc. HF	**Dilute HF**	**All HF**	**Conc. HF**	**Dilute HF**	**All HF**
First Aid	Water Wash THEN ZEPHIRAN®A 0.13% soaks OR Calcium Gluconate 2.5% Gel	Water Wash THEN ZEPHIRAN®A 0.13% soaks OR Calcium Gluconate 2.5% Gel	Water Wash THEN 1% Calcium Gluconate Irrigation	**Oxygen** AND 2.5% Calcium Gluconate by Nebulizer	Oxygen AND 2.5% Calcium Gluconate by Nebulizer	Do Not **Induce** Vomiting Milk or Water THEN Milk of Magnesia or MYLANTA®B
Medical Treatment	Debride THEN Continue soaks or Calcium Gluconate 2.5% Gel OR Calcium Gluconate 5% Injection[2] AND Observe For/And Treat systemic Effects[3] (especially if>25sq. in.)	**Debride** THEN Continue Soaks or Calcium Gluconate 2.5% Gel OR Calcium Gluconate 5 % Injection[2] systemic **Effects[3]** Unlikely	Topical Tetracaine Hydrochloride THEN 1% Calcium **Gluconate** Irrigation AND Consult Ophthalmologist	Observe AND Treat Bronchoconstriction, Pulmonary Edema and systemic Effects[3]	Observe (Serious Effects Unlikely)	Lavage with Limewater **AND** Treat Systemic Effects[3]

1) This is a summary of First Aid and Treatment measures. The **text of** the booklet "RECOMMENDED MEDICAL **TREATMENT FOR** HYDROFLUORIC ACID EXPOSURE" must be consulted for more complete information.

2) 5% Calcium gluconate injections must be used if the gel **does** not significantly relieve **pain** in 30-40 minutes. Injections may also **be** used as the primary treatment, **especially** for larger and/or deeper burns.

3) Systemic effects include hypocalemia, hypomagnesemia, hyperkalemia, cardiac arrhythmias, and altered pulmonary hemodynamics. TREATMENT includes cardiac monitoring. monitoring serum calcium, magnesium, and electrolytes: administration of intravenous **calcium** gluconate, correcting magnesium and electrolyte imbalance. and dialysis.

NOTE: In addition to the usual medical history, the physician will find it helpful to obtain the following information: concentration of Hydrofluoric Acid, date and time of exposure, duration of exposure, how exposure occurred, body parts exposed/affected, first aid measures instituted (what, when, how long). Injuries due to dilute Hydrofluoric Acid solutions or low concentrations of vapors may result in delays in clinical presentation up to 24 hours following exposure.

A Registered Trademark, Winthrop Laboratories, New York, NY 10016.

B Registered Trademark, Stuart Pharmaceuticals, Wilmington, DE 19897

For additional reference charts **or** information properties. storage and handling or medical treatmnt **for** hydrofluric acid, contact:

The HF Products Group
Allied-Signal Inc.
P.O. **Box** 1053
Morristown, NJ 07962-105.3

In the event **of an** emergency with this product. call the 24-hour Allied-Signal emergency telephone number: ***(201)*** 455-2000.

All statements, information, and data given herein are believed to be accurate and reliable, but are presented without guaranty, warranty, or responsibility of any kind, express or implied. Statements or suggestions concerning possible use of our products are made without representation or warranty that any such use is free of patent infringement and are not recommendations to infringe any patent. The user should not assume that all medical and first aid measures are indicated or that other measures may not be required.

ED_002700_00005500-00241

Treatment of HF Exposure: Quick Reference Inside Cover

Table of Contents 1

Introduction 2

Acute Toxicity 2
Skin Contact 2
Systemic Toxicity 3
Eye Contact 3
Inhalation 3
Ingestion 4

Chronic Toxicity 4

First Aid Treatment For Hydrofluoric Acid Burns. 4
Skin Contact 4
Eye Contact 5
Inhalation 6
Ingestion 6

Medical Treatment For Hydrofluoric Acid Burns. 6
Burns of the Skin-General 6
Quaternary Ammonium Compounds 6
Calcium Gluconate Gel 7
Calcium Gluconate Injections 7
Burns of the Fingers and Nails 7
Intra-arterial Calcium Infusion 8
Additional Measures 8
Systemic Absorption and Metabolic Effects 8
Eye Injuries 9
Inhalation Injuries 9
Ingestion Injuries 10

References.. 11
Appendix -First Aid and Medical Supplies 13
Notes 14

Introduction

Hydrofluoric acid is a very strong inorganic acid. Both anhydrous hydrofluoric acid (hydrogen fluoride) and its solutions are clear, colorless liquids. When exposed to air, concentrated solutions and anhydrous hydrofluoric acid produce **pungent fumes which are especially dangerous.** Unless heated, dilute concentrations of hydrofluoric acid in water do not produce vapors.

NOTE: Persons unfamiliar with hydrofluoric acid often mistake it or confuse it with hydrochloric acid. Although hydrofluoric acid (HF) and hydrochloric acid (I-ICI) sound similar, the toxicity of these two acids is very different. To decrease or avoid confusion, we recommend that ***HYDROFLUORIC*** *ACID,* and *HYDROGEN FLUORIDE* be referred to as "HF".

HF is primarily an industrial raw material. It is used in stainless steel manufacturing, iron and steel foundries, metal finishing, aluminum manufacturing, inorganic and organic chemical manufacturing, petroleum refining, mineral processing, glassmaking and electronic components manufacturing. It is also used in certain industrial and consumer cleaning compounds. **However, its use in consumer products is discouraged because of the hazards described herein.**

Most non-industrial bums are caused by dilute concentrations of HF. Most of the HF used in the electronics industry is less than 50% concentration. However, many industrial uses of HF involve concentrated **(50-100%)** HF.

WARNING: BURNS WITH CONCENTRATED BP ARE USUALLY VERY SERIOUS, WITH THE POTENTIAL FOR SIGNIFICANT COMPLICATIONS DUE TO FLUORIDE TOXICITY. CONCENTRATED HF, LIQUID OR VAPOR, MAY CAUSE SEVERE BURNS, METABOLIC IM-BALANCES, PULMONARY EDEMA AND LIFE THREATENING CARDIAC ARRYTHMIAS. EVEN *MODERATE* EXPOSURES TO CONCENTRATED HF MAY RAPIDLY PROGRESS TO A FATALITY IF LEFT UNTREATED.

Allied-Signal is the world's leading supplier of hydrofluoric acid. The recommended medical procedures described below are based on many years experience in dealing with the unique hazards of this product, in addition to a review of the medical literature. Every effort must be made to prevent exposure to hydrofluoric acid. If exposure does occur, the specialized procedures which follow are recommended to avoid the very serious consequences that might otherwise occur.

Because the medical treatment of hydrofluoric acid exposure is so specialized and differs from the treatment of other inorganic acid exposures, not all physicians may be aware of appropriate treatment measures. It is recommended that HF users make arrangements ahead of time with local medical resources to be sure that users are familiar with first aid measures and that professional personnel are familiar with the toxicity of HF and the treatment of HF exposure. This would include, at a minimum, thoroughly reviewing this booklet and making sure that treatment facilities and supplies are available.

Acute Toxicity

Skin Contact

Hydrofluoric acid (HF) can cause serious, painful burns of the skin. Specialized first aid and medical treatment is required. **Burns larger than 25 square inches (160 square cm) may result in serious systemic toxicity.**

Hydrofluoric acid is a highly corrosive acid which can severely bum skin, eyes, and mucous membranes. The ***vapors*** from anhydrous hydrofluoric acid or its concentrated solutions can also bum these tissues.

Hydrofluoric acid is similar to other acids in that the initial extent of a bum depends on the concentration, the temperature and the duration of contact with the acid. Hydrofluoric acid differs, however, from other acids because the fluoride ion readily penetrates the skin, causing destruction of deep tissue layers including 'bone. Unlike other acids which are rapidly neutralized, this process may continue for days.

Strong acid concentrations (over **50%),** and particularly anhydrous HF (AI-IF or 100% HF), usually cause immediate, severe, burning pain and a whitish discoloration of the skin which usually proceeds to blister formation. Exposure to HF vapors can also result in similar bums.

In contrast to the immediate effects of concentrated HF, the effects of contact with more dilute hydrofluoric acid or its vapors may be delayed, and this is one of the problems with the recognition of some HF bums. Contact with acid concentrations in

the 20% to 50% range may not produce clinical signs or symptoms for one to eight hours. With concentrations less than **20%**, the latent period may be up to twenty-four hours. HF concentrations as low as 2% may cause symptoms if the contact time is long enough (1).

HF skin bums are accompanied by severe, throbbing pain which is thought to be due to irritation of nerve endings by increased levels of potassium ions entering the extracellular space to compensate for the reduced levels of calcium ions, which have been bound to the fluoride. Thus, relief of pain is an important guide to the success of treatment.

The usual initial signs of an HF bum are redness, edema, and blistering. With more concentrated acids, a blanched white area appears. The fluoride ion penetrates the upper layers of the skin. A **thick** granular exudate may form under blisters due to liquifaction necrosis. In rare (and untreated) cases, there may be penetration to underlying bone with decalcification.

HF burns require immediate and specialized first aid and medical treatment (2,3,4,5,6) differing from the treatment of **other** chemical bums. If untreated or improperly treated, permanent damage, disability or death may result (7). If, however, the bums are promptly and properly recognized and managed, the results of treatment are **generally** favorable.

Treatment is directed toward tying up the fluoride ion to prevent tissue destruction. High molecular weight quaternary ammonium compounds, e.g. ZEPHIRAN® (benzalkonium chloride), are used as soaking agents* **(8,9,10).** Calcium gluconate as a gel or ointment can be applied locally, and calcium gluconate solution may be injected (subcutaneously, intravenously, or intra-arterially), inhaled, or used as an irrigant **(3,11,12,13,14).**

Speed is of the essence. Delays in first aid care or medical treatment or improper medical treatment will likely result in greater damage or may, in some cases, result in a fatal outcome.

Systemic Toxicity

One of the most serious consequences of severe exposure to HF by any route is the marked lowering of serum calcium) and other metabolic changes, which may result in a fatal outcome if not recognized and treated. Hypocalcemia should be considered a possible risk in all instances of *inhalation* or *ingestion,* and **whenever skin burns exceed 25 square inches,** (160 square centimeters). Serum magnesium may also be lowered, and elevations in serum potassium have been reported to further complicate the metabolic imbalances which will need to be monitored and corrected **(15,16,17).** High levels of fluorides have been noted both in the blood and body organs. Hemodialysis has been reported to be effective therapy for cases of severe systemic intoxication (**18,19).** Treatment for shock may also be required as for other severe injuries.

Other effects reported from fluoride exposure include coagulation defects and inhibition of a number of enzymes, including preglycolytic enzymes, phosphatases and cholinesterase. The results of this enzyme inhibition include inhibition of cellular glucose phosphorylation and subsequent glycolysis, inhibition of respiration, and increased sensitivity of cholinergic mechanisms to acetyl cholinesterase (20).

While hypocalcemia has been traditionally considered the major systemic effect of severe poisoning with HF, it is apparent that hypomagnesemia, hyperkalemia, the cardiodepressing and vasodilating effects of fluoride, and effects on pulmonary hemodynamics and systemic capacitance vessels, including an increase in pulmonary vascular resistance, all play a role in systemic toxicity. Although some of these effects have been **described,** the implications for therapeutic measures have not been well **defined (21,22,23).**

Eye Contact

Hydrofluoric acid can cause severe eye burns, **with** destruction or opacification of the cornea. Blindness may result from severe or untreated exposures. Immediate first aid and specialized medical care is required **(3,12).**

Inhalation

Hydrofluoric acid fumes may cause bronchospasm and/or acute pulmonary edema. **Acute** symptoms may include coughing, choking, chest tightness, chills, fever and cyanosis. Most reported fatalities from HF exposures have been due to severe pulmonary edema (coupled with systemic toxicity) that did not respond to medical treatment.

Bums **from** vapors or liquid contact to the oropharyngeal mucosa or upper airway may cause severe swelling to the point of requiring **a**

*Quatemary ammonium compounds which have proven clinically successful in treating HF bums include- ZEPHIRAN® (benzalkonium chloride) and HYAMINE® 1622 (benzethonium chloride). Because it is available in the U.S. as a non-prescription drug, ZEPHIRAN® is recommended.

tracheostomy. It is recommended that all patients with such exposures be hospitalized for observation.

Because of the strong irritant nature of hydrofluoric acid, an individual inhaling HF vapors or fumes will usually experience upper respiratory injury, with mucous membrane irritation and inflammation as well as cough. **All** individuals suspected of inhalation should be observed for pulmonary effects. This would include those individuals with significant upper respiratory irritation, broncho-constriction by pulmonary auscultation or spirometry , and any individual with HF exposure to the head, chest or neck areas. It has been reported that pulmonary edema may be delayed for several hours and even up to two days. If there is no initial upper respiratory irritation, significant inhalation exposure can generally be ruled out.

The Permissible Exposure Limit (PEL) set by **the** U.S. Occupational Safety and Health Administration (OSHA) is a ceiling level of 3 ppm and a 15 minute short term exposure limit (STEL) of 6 ppm (24). The National Institute for Occupational Safety and Health (NIOSH) has established a level that is immediately dangerous to life and **health (IDLH)** at 30 ppm **(25)**. The American Industrial Hygiene Association has published Emergency Response Planning Guidelines setting **50** ppm as the maximum level below which nearly all individuals could be exposed for one hour without experiencing or developing life-threatening health effects **(ERPG-3)**, 20 **ppm** as the maximum level below which nearly all individuals could be exposed for one hour without developing irreversible health effects or symptoms which would impair taking protective action **(ERPG-2)**, and 5 ppm as the maximum level below which nearly all individuals could be exposed up to one hour without experiencing other than mild, transient adverse health effects **(ERPG-1)** (26).

Ingestion

If hydrofluoric acid is ingested, severe burns to the mouth, esophagus and stomach may occur. Severe systemic effects usually also occur. Ingestion of even small amounts of dilute HF have resulted in death (27).

Chronic Toxicity

Chronic toxicity from overexposure to fluoride ion has been reported to result in tooth mottling in children, bone fluorosis and sometimes osteosclerosis in adults and children.

Skeletal fluorosis is known to be associated **with** excessive exposure to fluoride compounds. Cases of skeletal fluorosis have been reported in populations exposed to naturally occurring drinking water containing greater than 10 ppm of fluoride ion and in individuals exposed to high levels of fluoride containing dusts. However, skeletal fluorosis has not been reported as a consequence of hydrofluoric acid exposure .

Fluorides are not carcinogenic, and have not been reported to cause male or female reproductive effects. Fluoride exposures should be kept below recommended levels to assure no adverse effects to **the** developing fetal skeletal system.

Monitoring of urine for fluorides is an accepted method of determining exposure (28). Urine fluoride levels above 3 **mg/liter** at the beginning of a workshift, or above 10 **mg/liter** at the end of a workshift, may indicate excessive absorption of fluoride. It should be noted that fluorides are often present in significant amounts in persons not occupationally exposed **(because** of dietary sources of fluoride such as tea), and that the urine fluoride determination is not specific for HF (29, 30).

First Aid Treatment For Hydrofluoric Acid Burns

***In** Case of Contact or Suspected Contact with **Hydrofluoric** Acid:*

Skin Contact

1. Move victim immediately under safety shower or other water source and flush affected area thoroughly with large amounts of cool running water. Speed in washing off the acid is of primary importance.
2. Remove all contaminated clothing while flushing with water.
3. Rinse with large amounts of cool running water. If 0.13% ZEPHIRAN® solution or 2.5 **%** calcium gluconate gel are available, **the** rinsing may be limited to 5 minutes, with the soaks or gel applied as soon as the rinsing is stopped. If ZEPHIRAN® or calcium gluconate gel are not available, rinsing must continue until **medical** treatment is rendered.
4. While the victim is being rinsed with water, someone should alert first aid or medical personnel and arrange for subsequent treatment.

5. Immediately after thorough washing, use one of the measures below:

   a. **Begin** soaking the affected areas in 0.13% ZEPHIRAN® solution.

      If immersion is not practical, towels should be soaked with iced 0.13% ZEPHIRAN® solution and used as compresses for the burned area. Compresses should be changed every two to four minutes.

      Do not use ZEPHIRAN® solution for burns of the eyes. Exercise caution when using ZEPHIRAN® solution near the eyes as it is an eye irritant.

      ZEPHIRAN® soaks or compresses should be continued until pain is relieved or until more definitive care is rendered (see below).

   b . Start massaging 2.5 **%** calcium gluconate gel into the burn **site.**

      Apply gel every 15 minutes and rub in continuously until pain and/or redness disappear or more definitive care is given (see below).

      It is advisable for the individual applying the calcium gluconate gel to wear surgical gloves to prevent a possible secondary HF burn.

6. After treatment of burned areas is begun, the victim should be examined to ensure there are no other burned areas which have been overlooked.

7. Arrange to have the victim seen by a physician. During transportation to a medical facility or while waiting for a physician to see the victim, continue the ZEPHIRAN® soaks or compresses or continue massaging calcium gluconate gel. In many situations, particularly for minor burns covering a small skin area or for burns caused by dilute HF, continued treatment with soaks or gel may be effective as the sole type of medical care. All persons with extensive burns or burns with significant blister formation or with the appearance of whitish or dead skin need to be seen by a physician.

8. The physician may advise continuation of ZEPHIRAN®soaks or *calcium gluconate gel.*

   a . If the physician advises continued treatment with ZEPHIRAN®soaks or compresses, the soaks or compresses are usually required for 2 to 4 hours. Significant relief of pain should be noted within the first 30 minutes. If this does not occur, the victim must be seen by a physician and more definitive care instituted. If the pain is substantially relieved, continue the treatment for two hours. After that time, discontinue treatment and observe for the recurrence of pain. If pain recurs, continue soaks or compresses for an additional two hours. Soaking for six hours is sometimes needed. (Note: Because prolonged immersion in the ice bath may result in discomfort, relief may be obtained by removing the part from the bath every ten minutes for a minute or so and then reimmersing it. After the initial **30-60** minutes of treatment, less ice can be used so the bath is cool rather **than** cold.)

   b. *Calcium gluconate gel may be used* for several hours or even repeated over a period of a few days. However, if significant relief of pain does not occur within **3040** minutes, more definitive treatment will be required. For small burns, or bums of the face, ears, and near mucous membranes, calcium gluconate gel may be very useful. The gel is applied every fifteen minutes and massaged into the burned area. This is continued until relief is obtained or further medical care is available.

9. Seek medical attention as soon as possible for all burns regardless of how minor they appear initially.

Eye Contact

1. **Immediately** flush the eyes for at least 15 minutes with large amounts of gently flowing water. Hold the eyelids open and away from the eye during irrigation to allow thorough flushing of the eyes. Do not **use the ZEPHIRAN® solutions described for skin treatment. If** 1% calcium duconate solution is available, washing may be limited to 5 minutes, after which the 1% calcium gluconate solution should be used repeatedly to irrigate the eye using a syringe.

2. Take the victim to a doctor, preferably an eye specialist, as soon as possible. Ice water compresses should be applied to the eyes while transporting the victim to the doctor.

3. If a physician is not immediately available, apply one or two drops of 0.5% PONTOCAINE® hydrochloride solution or other aqueous, topical ophthalmic anesthetic and continue irrigation. Use no other medications unless instructed to do so by a physician. Rubbing of the eyes is to be avoided.

For Inhalation of Vapors

1. Immediately move victim to fresh air and get medical attention.
2. Keep victim warm, quiet and comfortable.
3. If breathing has stopped, start artificial respiration at once. Make sure mouth and throat are free of foreign material.
4. Oxygen should be administered as soon as possible by a trained individual. Continue oxygen while awaiting medical attention unless instructed otherwise by a physician.
5. A nebulized solution of 2.5% calcium gluconate may be administered with oxygen by inhalation.
6. Do not give stimulants unless instructed to do so by a physician.
7. The victim should be examined by a physician and held under observation for at least a 24 hour period.
8. Vapor exposures can cause skin and mucous membrane burns as well as damage to pulmonary tissue. Vapor burns to the skin are treated the same as liquid HF bums.

If Acid is Ingested

1. Have the victim drink large amounts of water as quickly as possible to dilute the acid. Do not induce vomiting. Do not give emetics or baking soda. Never give anything by mouth to an unconscious person,
2. Give several glasses of milk or several ounces of milk of magnesia, MAALOX® MYLANTA® etc. The calcium or magnesium in these compounds may act as an antidote.
3. Get immediate medical attention.

Medical Treatment For Hydrofluoric Acid Burns

Burns of the Skin -- General

Burns from dilute acid are difficult to distinguish from other chemical burns and usually appear as areas of erythema. However, they may progress, if not treated, to areas of blistering, necrosis or ulceration. Burns from more concentrated acid have a rather characteristic appearance and present as severely reddened, swollen areas **with** blanched, whitish regions which rapidly progress to blistering and necrosis. A thick granular exudate usually appears under these blisters which requires debridement and removal.

Hydrofluoric acid burns cause extreme pain. The pain is thought to result from nerve ending irritation due to increased levels of potassium ions in extracellular spaces to compensate for the reduced levels of calcium ions which have been bound by the fluoride. **Relief of pain is an excellent indication of the success of treatment and, therefore, local anesthetics should be avoided.**

Many different types of therapies have been suggested for HF burns. The aim of all treatment is to chemically sequester **the** fluoride ion and to prevent extensive, deep-tissue destruction (31).

After treatment of burned areas is begun, the victim should be carefully examined to insure there are no other burned areas which may have been overlooked.

Quaternary Ammonium Compounds

Most HF bums can be satisfactorily treated by immersion of the burned part in an iced, aqueous (or aqueous-alcohol) solution of a quaternary ammonium compound. Two solutions have been clinically successful, 0.13 **%** ZEPHIRAN® (benzalkonium chloride) or 0.2% HYAMINE® 1622 (benzethonium chloride). *Because of its availability as a non-prescription drug, ZEPHIRAN® is recommended in the United States.*

The solutions should be cooled **with** ice cubes. (Shaved or crushed ice may cause excessive cooling, with the danger of frostbite.)

If immersion in the solution is not practical, soaked compresses of the same iced solution should be applied to the burned area. The immersion or compresses should be used **for at least two hours.** Compresses should be changed or soaked with additional solutions approximately every two to four minutes.

If blisters are present, they should be opened and drained and necrotic tissue should be debrided prior to use of ZEPHIRAN® immersion or compresses.

Prolonged immersion in the iced ZEPHIRAN® bath may result in discomfort due to excess chilling; relief may be obtained by removing the part from the bath every ten to fifteen minutes for a few minutes and then reimmersing it. After the initial 30-60 minutes of treatment, less ice can be used so the bath is cool rather than cold.

The success of this treatment is indicated by relief of the severe pain in the burned area. If pain recurs when the treatment is stopped at the end of the first two hours, immersion or compresses should be resumed for an additional **two** hours. A total of four to six hours immersion or use of compresses of ZEPHIRAN® is usually required for the treatment of most bums. No further treatment will be required in many instances. The use of iced quaternary ammonium compound solutions offer several advantages:

a. reduction of local pain
b. possible slowing of the rate of tissue destruction
c. possible slowing of the passage of the fluoride ion into tissues and into the bloodstream

Large burns, significant burns due to concentrated HF, or burns with delayed treatment will probably require the use of calcium gluconate injections in addition to or instead of the ZEPHIRAN® soaks.

Quaternary ammonium compounds should not be used for bums on the face, ears or other sensitive areas due to their irritating nature. It is preferable to use calcium gluconate gel or calcium gluconate injection in these areas.

Calcium Gluconate Gel

Calcium gluconate gel, consisting of 2.5% USP calcium gluconate in a surgical water soluble lubricant, is widely used for first aid and/or primary treatment of HF bums of the skin. The gel is convenient to carry and can be used to initially treat small bums that might occur away from medical care. **The** gel is used by massaging it promptly and repeatedly into the burned area, until pain is relieved. If possible, surgical gloves should be worn during initial application of the gel, so the person providing treatment will not receive a secondary bum. This treatment can be started without waiting for medical direction.

If used as the only method of treatment, liberal quantities of calcium gluconate gel must be massaged into the burned area intermittently for several hours. Relief of pain can be used to assess the efficacy of this treatment. If good relief of pain is not obtained after **30-40** minutes, alternate methods of treatment such as calcium gluconate injections or ZEPHIRAN® soaks should be considered. The gel may have to be used 4-6 times daily for 3 to 4 days.

The gel is especially useful for bums on the face, particularly near the mouth and eyes or on the ears. It may be convenient to use the gel for very small bums where the victim can easily apply and massage the gel himself. Use of the gel may be more convenient for dilute acid burns such as occur with commercial products like rust removers, aluminum cleaners or etching solutions.

Calcium Gluconate Injections

After first aid measures have been taken, injection of calcium gluconate solution is indicated as the primary medical treatment for large bums (over 25 square inches). For smaller bums, if ZEPHIRAN® soaks or calcium gluconate gel do not promptly result in relief of pain, injection of calcium gluconate solution is indicated. Injection of calcium gluconate solution may **also** be indicated for bums in which treatment has been delayed. The physician should inject sterile 5% aqueous calcium gluconate beneath, around and into the burned area. Calcium gluconate is packaged as a 10% solution, and must be diluted 50-50 (equal parts) with normal saline. (Note: DO NOT USE calcium chloride, which is corrosive and may result in additional damage.)

If subcutaneous calcium gluconate injections are used, the amount injected initially is small and should not exceed 0.5 cc per square centimeter of affected skin surface. The injections should not distort the appearance of the skin. A small-gauge needle (27-30 gauge) should be used, and the burned area should be injected through multiple sites. The patient can usually advise when the pain stops, and this is an indicator of adequate treatment. Multiple injections in skin that has compromised integrity may increase the risk of infection, and the use of antibiotic creams such as SILVADENE® (silver sulfadiazine) or GARAMYCIN® (gentamicin sulfate cream) should be considered following such treatment. Local anesthetics should not be used since they mask pain relief which is an **important** indication of adequacy of treatment.

Some physicians prefer using calcium gluconate injections initially as the primary treatment, instead of using quatermary ammonium compound soaks or compresses or using calcium gluconate gel. Injections often are not necessary when there has been early and adequate treatment with soaks or gel.

Burns Of The Fingers And Nails

Bums of the fingers often create special problems in treatment. Finger and toe nails permit penetration of fluoride ions but prevent soaks or gels **from** being effective. It may be necessary on occasion to split or even remove nails to allow the topical methods of

treatment to be effective. One author has cautioned that removal of the nail should rarely be necessary in the case of dilute HF acid (less than 10%) burns (32). The treating physician must consider the morbidity associated with removal of the nail versus the need to treat the HF exposure.

If immersion in ZEPHIRAN® solution is started immediately, it may be possible to avoid removing the nail. Sometimes better penetration under the nail can be successfully accomplished by splitting the nail or by drilling several burr holes in the nail using a large gauge needle or a nail drill. If calcium gluconate injection is used as treatment, the nail may still need to be split or removed. Some authorities recommend the use of general anesthesia or a regional nerve block, rather than local anesthesia, to remove the nail so that pain relief by calcium gluconate injections may be used as an indicator of effective treatment. When using calcium gluconate injections in the digits, care must be taken to inject the solution slowly so as to avoid any compromise to the circulation in these areas.

Intra-arterial Calcium Infusion

Reports in the literature have described the use of intra-arterial injection or infusion of dilute calcium gluconate solutions to treat HF burns of the hand and digits which do not respond to other methods, either due to inadequate or improper treatment, or in cases where treatment has been greatly delayed. The method is described as follows:

> "A long catheter was inserted percutaneously into the radial artery using standard aseptic technique. Intraarterial catheter placement was confirmed by pressure transducer and oscilloscope. If the bum involved only the thumb, index, or long fingers, the catheter was advanced only a few centimeters proximally in preparation for digital subtraction arteriography . If the bum involved the ring or small fingers, the catheter was advanced proximally into the brachial artery because access to the ulnar circulation was necessary.
>
> Following satisfactory placement of the arterial catheter, we performed digital subtraction arteriography on all patients in our series to identify the origin of vascular supply to digits involved.
>
> Once the tip of the arterial catheter was in the desired location, a dilute preparation of calcium [gluconate] (10 ml of a 10% solution mixed in 40 to 50 ml 5% dextrose) was infused with a pump apparatus into the catheter over four hours. We generally have used calcium gluconate. . . . Each patient was observed closely during the infusion period for progression of symptoms and potential complications of the procedure, such as alterations of distal vascular supply.
>
> Following the four-hour infusion, the arterial catheter was maintained in place in the usual manner while the patient underwent an observation period. If typical HF pain returned within four hours, a second calcium infusion was repeated until the patient was pain free four hours following completion of the calcium infusion. (13)"

This method, although rather involved, should be considered in selected cases, especially where inadequate or delayed treatment has occurred.

Additional Measures

Where blistering and/or necrosis occur, early debridement may facilitate healing.

In instances of extensive burns, skin grafting has occasionally been required, but the need for this treatment should be markedly reduced by immediate and aggressive primary treatment.

Follow-up care requires monitoring to prevent secondary infections, and the use of antibiotic creams such as SILVADENE® or GARAMYCIN® has proven effective. HF burns may heal slowly, but if properly treated most heal with little or no scarring in 14 to 28 days.

Systemic Absorption and Metabolic Effects

Significant amounts of fluoride ion may be absorbed by skin contact, inhalation, or by ingestion. If systemic absorption of fluoride occurs, hypocalcemia, hypomagnesemia and hyperkalemia may also occur. All of these parameters need to be monitored and appropriate therapeutic measures instituted. The patient should be observed for clinical signs of hypocalcemia following ingestion or inhalation or following extensive burns greater than 25 square inches. Serum calcium determinations must be performed immediately and periodically to monitor and treat hypocalcemia. Severe lowering of serum calcium levels can occur within one to two hours even with HF bums covering less than 2.5% of body surface area (7). Continuous EKG monitoring to observe prolongation of the Q-T interval may be useful to detect early changes in serum calcium, although profound hypocalcemia following HF exposure has been reported in the absence of EKG changes.

The fall in serum calcium may occur precipitously following HF exposure. In two reported cases of exposure to anhydrous HF, the serum calcium fell to

levels around 3 milliequivalents per liter **(mEq/L)** [normal = 8.8 - 10.3 **mEq/L]** within one to three hours of exposure **(7,32).**

If necessary, aqueous calcium gluconate may be given intravenously. Calcium gluconate as a 10% solution must be given slowly since excess calcium **can** produce vagal bradycardia, ventricular arrhythmias and ventricular fibrillation. The IV calcium gluconate should be repeated until serum calcium levels return to, and remain at, normal levels. In one fatal case, 280 **mEq** of calcium over four hours was not sufficient to correct the profound hypocalcemia (7). Without additional measures such as renal dialysis, it may not be possible to correct extreme hypocalcemia.

Serum magnesium levels should also be monitored and magnesium loss should be replaced intravenously if indicated. Serum potassium must also be carefully monitored. Significant elevations of serum potassium have been noted in cases of fluoride toxicity and also in laboratory studies. Hyperkalemia has also been implicated as a causative factor in cardiovascular collapse. The use of quinidine may be helpful in preventing this serious complication (19).

Renal dialysis with fluoride free water, in conjunction with other treatments mentioned, should be considered in all cases of serious burns and may need to be repeated if indicated **(18,19).** Serum fluoride levels should be monitored. Normal plasma fluoride levels may differ because of various methodologies and analytical techniques. The decision to use dialysis should be based on the clinical condition of the patient, including the serum levels of fluoride, calcium and potassium.

Primary excision has been recommended by some practitioners as a method of reducing systemic absorption of fluoride (33). While this could in some instances be life saving, it is a rather drastic measure. It is likely that renal dialysis could be used to effectively treat systemic toxicity and would not result in disfigurement, disability, or morbidity which could be associated with primary excision.

Eye Injuries

HF can cause severe eye burns which, if not properly treated, may result in scarring and blindness. The prognosis is not good if first aid treatment is delayed or inadequate. After first aid treatment (see FIRST AID section) the following medical treatment may be provided:

For minor exposures with very dilute HF, the following treatment has been successful:

> Mix 10 ml of 10%. calcium gluconate with 100 ml of normal saline to give approximately a 1% calcium gluconate solution. With a syringe, irrigate the eye intermittently for a period of 15 to 30 minutes or until relief of pain occurs.

With more serious HF eye bums, good results have been reported with the following procedure:

> Mix 50 ml of 10% calcium gluconate with 500 ml of normal saline to give approximately a 1% calcium gluconate solution. Using an eye clamp and IV infusion set under local anesthetic eye drops, instill the solution over a period of one to two hours. More prolonged use of the solution could possibly damage the cornea. A MORGAN THERAPEUTIC LENS® connected to an IV line may be a simpler method of infusing the calcium gluconate solution. This treatment has been reported to result in reversal of corneal edema and to prevent permanent eye damage or loss of vision. Consultation with an ophthalmologist to consider the use of steroids, antibiotics or additional treatment is recommended.

Inhalation Injuries

Patients with inhalation exposures should also be observed for signs of systemic absorption and fluoride toxicity.

Exposure to hydrofluoric acid fumes can cause acute respiratory irritation, bronchospasm, and/or **pulmonary** edema. Medical personnel should also be alert to the possibility of development of **pulmonary edema** when extensive burns of the face, neck or chest have occurred.

The victim should be removed from exposure and administered 100% oxygen immediately. The use of 2.5 **%** aqueous calcium gluconate given by nebulizer with 100% oxygen, or with intermittent positive pressure, has been recommended. Theoretically this should reduce toxicity and damage from the fluoride ion and should be seriously considered in cases of inhalation exposure.

Burns of the oral mucosa or upper airway may cause severe swelling and necessitate a **tracheostomy.** It is, therefore, recommended that all such patients be admitted to a hospital for observation.

Because inhalation of HF may be associated with significant bronchospasm, inhaled, oral or parenteral bronchodilators should be administered as necessary.

Pulmonary function testing may be helpful in assessing the degree and progress of pulmonary injury.

Specific measures may be needed to treat pulmonary edema. High doses of parenteral steroids may be needed along with the administration of appropriate diuretics. Caution should be taken not to administer excessive fluid. Hemoconcentration may require treatment by phlebotomy. The management of pulmonary edema may result in renal failure due to reduced fluid volume, and this may be another indication for renal dialysis.

If it is necessary to relieve anxiety, use general measures and do not **use** sedatives which could cause central nervous system depression or hypoventilation. Although right heart failure is uncommon in chemically-induced pulmonary edema, monitoring of pulmonary pressure, arterial pressure, and central venous pressure may be indicated.

Secondary infections must be treated. It is preferable to start antibiotics at the first signs of infection such as fever or tachycardia. Periodic blood cultures may be advisable. Prophylactic use of antibiotics is not advised.

Ingestion Injuries

After first aid is completed (drinking several glasses of water followed by two glasses of milk or two ounces of milk of magnesia, MYLANTA®, or other calcium or magnesium containing antacids), the stomach may be lavaged with lime water. The Levin tube must be passed with care to prevent perforation. Treatment is the same as for ingestion of other strong acids. Systemic toxicity is very likely to occur and may require aggressive treatment.

References

1. Derelenko, M.J., et al: Acute Dermal Toxicity of Dilute Hydrofluoric Acid. J. Toxicol-Cut and Ocular Toxicol 4:73-85, 1985.

2. MacKiMon, M.A.: Hydrofluoric Acid Bums. Dermatologic Clinics **6:67-74,** January, 1988.

3. Trevino, M.A. : Treatment of Severe Hydrofluoric Acid Exposures. J. Occup. Med. **25:861-3,** December, 1983.

4. Edelman, P.: Hydrofluoric Acid Bums. State of the Art Rev. Occup. Med. **1:89-103,** 1986.

5. Upfal, M. and Doyle, C. : Medical Management of Hydrofluoric Acid Exposure. J. Occup. Med. 32: 726-31, August, 1990.

6. Caravati, E.M.: Acute Hydrofluoric Acid Exposure. Am. J. **Emerg.** Med. 6: 143-50, March, 1988.

7. .Tepperman, P.B.: Fatality Due to Acute Systemic Fluoride Poisoning Following a Hydrofluoric Acid Skin Bum. J. Occup. Med. 22: 691-2, October, 1980.

8. Wetherhold, J.M.: Treatment of Hydrofluoric Acid Bums. **J.** Occup. Med. **7:193-5,** May, 1965.

9. MacKinnon, M.A.: Treatment of Hydrofluoric Acid Bums (letter). J. Occup. Med. **28:804,** September, 1986.

10. Reinhardt, C.F.: Hydrofluoric Acid Bum Treatment. Am. Ind. Hyg. Assoc. J. **27:166-71,** 1966.

11. Browne, **T.D.**: The Treatment of Hydrofluoric Acid Bums. J. **Soc.** Occup. Med. **24:80-9,** July, 1974.

12. Rose L. and Trevino, M.A.: Further Evaluation of Hydrofluoric Acid Bums of the Eye. J. Gccup. Med. **26:483-4,** July, 1984.

13. Vance, M.V.: Digital Hydrofluoric Acid Burns: Treatment with Intra-arterial Calcium Infusion. Ann. **Emerg.** Med. **15:59-65,** August, 1986.

14. Davanzo, F. et al: Hydrofluoric Acid Intoxication: A New Therapy. Med. Lav. **78:333-6,** 1987.

15. McIvor, M.E.: Delayed Fatal Hyperkalemia in a Patient with Acute Fluoride Intoxication. AM. **Emerg.** Med. 16: 1166-7. October, 1987.

16. Cummings, C. and **McIvor,** M.E.: Fluoride Induced Hyperkalemia: The Role of CA2 Dependent K Channels. Am. J. **Emerg.** Med. **16:1-3,** January, 1988.

17. Boink, A.M., et al: An Investigation of the Pathophysiological Mechanisms of Hydrofluoric Acid Intoxication in Rats and Pigs: Interim Report. RIVM Report 318802 002, August, 1990.

18. Picazo, H.C.: Fluoride Removal from the Blood by **Hemodialysis.** Presented at HF Industry Safety Seminar, August, 1990.

19. McIvor, M.E.: Acute Fluoride Toxicity: Pathophysiology and Management. Drug Saf. **5:79-85,** 1990.

20. Sodium Fluoride. Hazardous Substances Data Bank, National Library of Medicine, 1990.

21. Gaugl, J.F. and Woolridge, B.: Cardiopulmonary Response to Sodium Fluoride Infusion in the Dog. J. **Toxicol** Environ. Health II:765-82, 1983.

22. Strubelt, O., et al: The Pathophysiological Profile of the Acute Cardiovascular Toxicity of Sodium Fluoride. Toxicology **24:313-23,** 1982.

References Continued

23. Braun, C.L.J.: RIVM/CTEF study on HF. Personal communication, 1990.

24. Air Contaminants; Final Rule. Department of Labor (OSHA) Fed. Reg. **54:2465,** January 19, 1989.

25. NIOSH Pocket Guide to Chemical Hazards. DHHS (NIOSH) Publication No. **90-117,** p 126, June, 1990.

26. Emergency Response Planning Guidelines: Hydrogen Fluoride. American Industrial Hygiene Assn., October, 1988.

27. Manoguerra, A.S. : Fatal Poisoning from Acute Hydrofluoric Acid Ingestion. Am. J. **Emerg.** Med. **4:362-363,** 1986.

28. Kono, K., et al: Urinary Fluoride Monitoring of Industrial Hydrofluoric Acid Exposure. Environ. Res. **42:415-20,** April, 1987.

29. 199 **1-** 1992 Threshold Limit Values for Chemical Substances and Physical Agents and Biological Exposure Indices. American Conference of Governmental Industrial Hygienists, p 23, Cincinnati, Ohio, 1991.

30. Documentation of the Biological Exposure Indices. American Conference of Governmental Industrial Hygienists, pp BE197-101, Cincinnati, Ohio, 1988.

3 1. Dunn, B.J., et al: An Assessment of the Efficacy of Selected Treatment for HF Dermal Burns. Presented at Society of Toxicology Meeting, February, 1990.

32. Roberts, J.R. and Merigian, K.S.: Acute Hydrofluoric Acid Exposure (letter). Am. J. **Emerg.** Med. **7:125-6,** January, 1988.

33. Buckingham, F.M.: Surgery: A Radical Approach to Severe Hydrofluoric Acid Bums. J. Occup. Med. 30;8734, November, 1988.

Appendix

First Aid and Medical Supplies

The following supplies should be maintained in a dispensary or first aid station near hydrofluoric acid handling and storage areas:

1. ZEPHIRAN® solution*
   a. For soaks and compresses, 3 to 4 gallons of 0.13 % water solution (1:750) of ZEPHIRAN® (benzalkonium chloride). The 1:750 (0.13%) solution can be purchased as a non-prescription drug in gallon containers.

      This solution should be obtained in advance and replaced annually. It is recommended that the solution be stored in properly labelled light-resistant containers .

   b. Ice cubes (not crushed or shaved ice).
   C. Assorted basins (for immersing burned areas in ZEPHIRAN® solution).
   d. Towels (for use as wet compresses).
2. Calcium gluconate gel

   Calcium gluconate gel (2.5% calcium gluconate in a water soluble base) may require a prescription from a physician. It may be formulated by a pharmacist by combining 2.5 grams of calcium gluconate USP in 100 ml K-Y® Jelly (3.2 grams per 4 ounce tube). It may also be made by mixing one ampule of 10% calcium gluconate solution for each 1.5 ounces of K-Y® Jelly (about 30 ml per 4 ounce tube). Although this makes a somewhat "soupy" mixture, it has the advantage that the ingredients may be stored separately until needed, and shelf life is less of a concern.

3. Aqueous calcium gluconate, 10% USP, 10 cc ampules
   a. To make calcium gluconate gel, or
   b. To mix with sterile saline for eye irrigation (5 ampules 10% calcium gluconate per 500 cc sterile normal saline for a 1% solution), or
   c. To mix with sterile saline for administration with oxygen by nebulization (10 cc 10% calcium gluconate in 30 cc sterile saline for a 2.5% solution), or
   d. To be administered by a physician. When injected subcutaneously, 10% calcium gluconate must be diluted half and half with normal saline to produce a 5% solution
4. Sterile 0.9% saline

   50 cc vials to dilute 10% calcium gluconate to 5% for injection.
   500 cc IV to dilute 10% calcium gluconate to 1% for eye irrigation.
5. 0.5% PONTOCAINE® (tetracaine hydrochloride) solution to counteract blepharospasm and facilitate eye irrigation.
6. Medical oxygen.
7. Nebulizer, to administer 2.5% calcium gluconate with oxygen.
8. Beta adrenergic bronchodilators and steroids for inhalation.
9. surgical gloves.
10. Syringes and needles (27-30 gauge).
11. MORGAN THERAPEUTIC LENS®

*In addition to ZEPHIRAN®, HYAMINE® 1622 has also been used successfully to treat HF burns. Because of its availability as a non-prescription drug, ZEPHIRAN® is recommended. Additional information concerning ZEPHIRAN® or HYAMINE® 1622 solutions can be obtained by writing to the addresses listed on page 14.

The FIRST AID AND MEDICAL TREATMENTS AND SUPPLIES recommended in this booklet are based on information reported in the medical literature and the personal experience of physicians With Allied-Signal, Inc. It should be noted that there are no medications in the U.S. for which the specific indication is the treatment of hydrofluoric acid bums. The physican has the dilemma of using prescription drugs in a non-approved manner, or of using substances which are not approved drugs but which have been proven effective for medical treatment. Given the choice between recommending effective treatment, or recommending the use of only drugs which are approved, we have chosen to recommend the effective treatment.

ZEPHIRAN® (benzalkonium chloride) is available in the U.S. as a non-prescription drug. It is a surface active agent sold for use as a disinfectant. It is available in a 7 :750 aqueous solution, a 17 % concentrate, and a tinted tincture. The concentrated 17% solution must be diluted. The tinted tincture is not recommended to treat HF exposures.

HYAMINE® 1622 (benzethonium chloride) has been used in veterinary medicine as an antiseptic for wounds and infections, but it is not available as a

drug. Care should be taken that HYAMINE® 1622 is used, not HYAMINE® with other numeric or alphanumeric modifiers.

CALCIUM GLUCONATE GEL is not available commercially in the United States as a pharmaceutical agent. It is hoped that a commercial preparation of calcium gluconate gel will be approved by the U.S. Food and Drug Administration, and become available in the U.S. as it now is in Canada, Great Britain, and other countries. At the present time in the U.S., however, calcium gluconate gel requires a prescription either for the compounded gel or for the 10% solution. The shelf life is uncertain, but it is recommended that calcium gluconate gel be replaced on an annual basis.

CALCIUM GLUCONATE INJECTION, USP (one gram in 10 ml, 10% solution) is **labelled** for intravenous use only. Experience has shown that when diluted to 5% with normal saline, and **used** as described in this booklet, it is a safe and effective treatment for HF skin exposure. When diluted to 2.5 **%** and used as described, it is safe for nebulization and inhalation, and when diluted to 1.0% and used as described, it is safe for eye irrigation.

Notes:

GARAMYCIN® is a Registered Trademark of Schering Corporation, Kenilworth, NJ 07033

HYAMINE® 1622 is a Registered Trademark of Lonza, Inc., Fairlawn, NJ 07410

K-Y® Jelly is a Registered Trademark of Johnson **&** Johnson Products, Inc., New Brunswick, NJ 08903

MAALOX® is a Registered Trademark of Rorer Pharmaceutical Corporation, Fort Washington, PA 19034

MORGAN THERAPEUTIC LENS® is a Registered Trademark of MorTan, Inc., Missoula, MT 59806

MYLANTA® is a Registered Trademark of Stuart Pharmaceuticals, Wilmington, DE 19897

PONTGCAINE® is a Registered Trademark of Winthrop Laboratories, New York, NY 10016

SILVADENE® is a Registered Trademark of Marion Laboratories, Kansas City, MO 64137

ZEPHIRAN® is a Registered Trademark of Winthrop Laboratories, New York, NY 10016

Notes

FOR ADDITIONAL INFORMATION

For additional information on properties, storage and handling, or medical treatment for hydrofluoric acid, contact:

Technical Service Manager--Hydrofluoric Acid
Allied-Signal, Inc.
P.O. Box 1053
101 Columbia Road
Morristown, NJ **07962-1053**

In the event of an emergency with this product, call the 24-hour Allied-Signal emergency telephone number: **(201) 455-2000.**

All statements, information, and data given herein are believed to be accurate and reliable but are presented without guaranty, warranty, or responsibility of any kind, express or implied. Statements or suggestions concerning possible use of our products are made without representation or warranty that any such use is free of patent infringement and are not recommendations to infringe any patent. The user should not assume that all medical and first aid measures are indicated or that other measures may not be required

This page intentionally left blank.

APPENDIX VII
FACILITIES REPORTING TO TRI FOR HYDROGEN FLUORIDE, 1990

FACILITY	CITY	STATE	MAXIMUM QUANTITY ON SITE (RANGE, POUNDS)	QUANTITY RELEASED OR TRANSFERRED* (POUNDS PER YEAR)	SIC CODE
3M	DECATUR	AL	100,000-999,000	86,900	2821
D & H CHEMICALS INC.	NEW BROCKTON	AL	10,000-99,999	0	2842
REYNOLDS METALS CO. ALLOYS PLANT	MUSCLE SHOALS	AL	10,000-99.999	0	3353
REYNOLDS METALS CO. SHEFFIELD PLANT	SHEFFIELD	AL	10,000-99,999	252	3479
TELEDYNE SC	HUNTSVILLE	AL	10,000-99,999	299	3399
CHEM-FAB	HOT SPRINGS	AR	10,000-99,999	252	3728
GREAT LAKES CHEMICAL CORP. SOUTH PLANT	EL DORADO	AR	1,000,000-9,999,999	210	2869
AMERICAN NATIONAL CAN CO.	PHOENIX	AZ	10,000-99,999	250	3411
CHEM RESEARCH CO. INC.	PHOENIX	AZ	100-999	750	3471
DOLPHIN INC.	PHOENIX	AZ	100-999	250	3324
GENERAL SEMICONDUCTOR INDUSTRIES INC.	TEMPE	AZ	1,000-9,999	250	3674
INTEL CORP. CHANDLER CAMPUS	CHANDLER	AZ	1 0,000-99,999	750	3674
KERLEY AG INC.	PHOENIX	AZ	100,000-999,000	5	2873
MICROCHIP TECHNOLOGY INC.	CHANDLER	AZ	1 ,000-9,999	260	3674
MOTOROLA INC.	MESA	AZ	100-999	9,350	3674
MOTOROLA INC. DMTG	PHOENIX	AZ	10,000-99,999	5,801	3674
OLIN HUNT SPECIALTY PRODUCTS INC.	CHANDLER	AZ	10,000-99,999	1	2819
ADVANCED MICRO DEVICES INC.	SANTA CLARA	CA	1,000-9,999	626	3674
AEROCHEM INC.	ADELANTO	CA	100,000-999,000	9,977	3728

ED_002700_00005500-00258

FACILITY	CITY	STATE	MAXIMUM QUANTITY ON SITE (RANGE, POUNDS)	QUANTITY RELEASED OR TRANSFERRED* (POUNDS PER YEAR)	SIC CODE
AEROCHEM INC.	ORANGE	CA	100-999	1,500	3728
ALCOA COMPOSITES INC. ASTECH DIV.	SANTA ANA	CA	1,000-9,999	11,076	3471
ALLIED-SIGNAL INC.	EL SEGUNDO	CA	100,000-999,000	516	2819
ALLOYS CLEANING INC.	LOS ANGELES	CA	10,000-99,999	10	3479
AMERICAN NATIONAL CAN CO.	CHATSWORTH	CA	10,000-99,999	250	3411
AMERICAN NATIONAL CAN CO.	FAIRFIELD	CA	10,000-99,999	250	3411
AMERICAN NATIONAL CAN CO.	LOS ANGELES	CA	10,000-99,999	250	3411
ANALOG DEVICES INC. BOURNS CO.	SANTA CLARA	CA	1,000-9,999	2,270	3674
APPLIED SOLAR ENERGY CORP.	CITY OF INDUSTRY	CA	1,000-9,999	250	3674
CARPENTER TECHNOLOGY CORP. SPECIAL PRODUCTS DIV.	EL CAJON	CA	10,000-99,999	0	3499
CASPIAN INC.	SAN DIEGO	CA	1,000-9,999	255	3728
CHEM-TRONICS	EL CAJON	CA	10,000-99,999	1,551	3724
CHEMTECH INDUSTRIES INC.	GARDENA	CA	10,000-99,999	250	2899
CROWN BEVERAGE PACKAGING	UNION CITY	CA	1 0,000-99,999	0	3411
CROWN BEVERAGE PACKAGING	VAN NUYS	CA	10,000-99,999	0	3411
CYPRESS SEMICONDUCTOR CORP.	SAN JOSE	CA	100-999	2,753	3674
DOUGLAS AIRCRAFT CO.	LONG BEACH	CA	10,000-99,999	2,455	3721
DOUGLAS AIRCRAFT CO.	TORRANCE	CA	10,000-99,999	6,605	3728
DOW CHEMICAL CO.	PITTSBURG	CA	100,000-999,000	4	2879
DU PONT ANTIOCH ANTIOCH	ANTIOCH	CA	1,000,000-9,999,999	600	2816
EG&G KT AEROFAB	EL CAJON	CA	0-99	250	3728

ED_002700_00005500-00259

FACILITY	CITY	STATE	MAXIMUM QUANTITY ON SITE (RANGE, POUNDS)	QUANTITY RELEASED OR TRANSFERRED* (POUNDS PER YEAR)	SIC CODE
EXAR CORP.	SUNNYVALE	C A	100-999	86	3674
EXSIL INC.	SAN JOSE	CA	100-999	250	3679
FLO-KEM INC.	COMPTON	C A	1,000-9,999	300	2842
GENERAL CHEMICAL CORP.	PITTSBURG	C A	10,000,000-49,999,999	1,340	2819
GOLDEN WEST REFINING CO.	SANTA FE SPRINGS	CA	1 00,000-999,000	448	2911
HENKEL CORP. PARKER+AMCHEM	FREMONT		10,000-99,999	10	2899
HEWLETT PACKARD CO. SAN JOSE SITE	SAN JOSE	C	1,000-9,999	237	3674
HEXFET AMERICA	TEMECULA	CA	1,000-9,999	250	3674
INTEGRATED DEVICE TECHNOLOGY	SALINAS	CA	1,000-9,999	511	3674
INTEL CORP. FAB 1/D2	SANTA CLARA	CA	1,000-9,999	5,194	3674
INTEL CORP. FAB 3	LIVERMORE	CA	100-999	7,573	3674
INTERNATIONAL LIGHT METALS CORP.	LOS ANGELES	C A	1,000-9,999	24,067	3354
INTERNATIONAL MICROELECTRONIC PRODUCTS	SAN JOSE	CA	100-999	18,966	3674
INTERNATIONAL RECTIFIER CORP.	EL SEGUNDO	CA	1,000-9,999	0	3674
J. R. SIMPLOT CO.	LATHROP	C A	1,000-9,999	1,095	2873
LINEAR TECHNOLOGY CORP.	MILPITAS	C A	100-999	15	3674
LSI LOGIC CORP.	SANTA CLARA	C A	1,000-9,999	14,016	3674
METAL CONTAINER CORP. OF CA OF CALIFORNIA	CARSON	C A	1,000-9,999	47	3411
MICROSEMI CORP.	SANTA ANA	CA	1,000-9,999	0	3674
MOBIL OIL CORP. TORRANCE REFINERY	TORRANCE	C A	10,000-99,999	250	2911
NATIONAL SEMICONDUCTOR CORP.	SANTA CLARA	C A	10,000-99,999	750	3679

ED_002700_00005500-00260

FACILITY	CITY	STATE	MAXIMUM QUANTITY ON SITE (RANGE, POUNDS)	QUANTITY RELEASED OR TRANSFERRED* (POUNDS PER YEAR)	SIC CODE
NEC ELECTRONICS INC.	ROSEVILLE	CA	10,000-99,999	250	3674
NORTHERN TELECOM ELECTRONICS INC.	SAN DIEGO	CA	100-999	5	3674
POWERINE OIL CO.	SANTA FE SPRINGS	CA	10,000-99,999	5	2911
PRECISION METAL PRODUCTS INC.	EL CAJON	CA	1000-9,999	500	3399
PRECISION SPECIALTY METALS INC.	LOS ANGELES	CA	100-999	1,700	3398
REYNOLDS METALS CO.	HAYWARD	CA	1,000-9,999	11	3411
REYNOLDS METALS CO. TORRANCE CAN PLANT	TORRANCE	CA	1,000-9,999	60	3411
ROCKWELL INTERNATIONAL	NEWPORT BEACH	CA	1,000-9,999	255	3674
ROHR INDUSTRIES INC.	CHULA VISTA	CA	1,000-9,999	5	3728
SEEQ TECHNOLOGY INC.	SAN JOSE	CA	100-999	255	3674
SEMTECH CORP.	NEWBURY PARK	CA	1,0009,999	14,750	3674
SIGNETICS CORP.	SUNNYVALE	CA	1,000-9,999	89	3674
SILICONIX INC.	SANTA CLARA	CA	11,000-999	750	3674
SONY MFG. CO. OF AMERICA	SAN DIEGO	CA	1,0009,999	487	3671
SPECTROLAB INC.	SYLMAR	CA	1,0009,999	0	3674
SURFACE TREATMENT & INSPECTION INC. (ST&I)	PARAMOUNT	CA	1,000-9,999	0	3470
TITECH INTERNATIONAL INC.	POMONA	CA	1,000-9,999	18	3369
TRW LSI PRODUCTS INC.	SAN DIEGO	CA	100-999	5,330	3674
ULTRAMAR INC.	WILMINGTON	CA	10,000-99,999	153	2911
VLSI TECHNOLOGY INC.	SAN JOSE	CA	100-999	10	3674
XICOR INC.	MILPITAS	CA	1,000-9,999	17,600	3674

ED_002700_00005500-00261

FACILITY	CITY	STATE	MAXIMUM QUANTITY ON SITE (RANGE, POUNDS)	QUANTITY RELEASED OR TRANSFERRED* (POUNDS PER YEAR)	SIC CODE
ATMEL CORP.	COLORADO SPRINGS	CO	1,000-9,999	505	3674
COORS BREWING CO.	GOLDEN	CO	10,000-99,999	501	2082
METAL CONTAINER CORP. (WND)	WINDSOR	CO	1,000-9,999	10	3411
NCR MEPD FORT COLLNS	FORT COLLINS	CO	1,000-9,999	1,407	3674
NCR MICROELECTRONIC PRODUCTS DIV.	COLORADO SPRINGS	CO	1,000-9,999	147	3674
ALLEGHENY LUDLUM CORP.	WALLINGFORD	CT	10,000-99,999	4,555	3316
AMERICAN NATIONAL CAN CO.	DANBURY	CT	10,000-99,999	250	3411
FELDSPAR CORP.	MIDDLETOWN	CT	10,000-99,999	0	3299
PRATT- & WHITNEY	EAST HARTFORD	CT	10,000-99,999	1,340	3724
SIKORSKY AIRCRAFT STRATFORD	STRATFORD	CT	10,000-99,999	10,968	3721
UNC NAVAL PRODUCTS	UNCASVILLE	CT	1,000-9,999	19,500	3559
WYMAN' GORDON INVESTMENT CASTINGS	GROTON	CT	100-999	1,250	3324
GENERAL CHEMICAL CORP. DELAWARE VALLEY WORKS	CLAYMONT	DE	1000,000-9,999,999	2,090	2819
AMERICAN NATIONAL CAN CO.	JACKSONVILLE	FL	10,000-99,999	250	3411
AT&T MICROELECTRONICS	ORLANDO	FL	1,000-9,999	76	3674
AVESTA SANDVIK TUBE INC.	WILDWOOD	FL	10,000-99,999	7,840	3317
CONSOLIDATED MINERALS INC.	PLANT CITY	FL	10,000-99,999	11,700	2874
FLORIDA TILE INDUSTRIES INC. FLORIDA TILE DIV.	LAKELAND	FL	0-99	27,560	3253
HARRIS CORP. GOVERNMENT SYSTEMS SECTOR	PALM BAY	FL	0-99	5	3669
HARRIS CORP. SEMICONDUCTOR PALM BAY	PALM BAY	FL	10,000-99,999	22,635	3674

ED_002700_00005500-00262

FACILITY	CITY	STATE	MAXIMUM QUANTITY ON SITE (RANGE, POUNDS)	QUANTITY RELEASED OR TRANSFERRED* (POUNDS PER YEAR)	SIC CODE
METAL CONTAINER CORP.	JACKSONVILLE	FL	1,000-9,999	85	3411
REYNOLDS METALS CO. TAMPA CAN PLANT	TAMPA	FL	1,000-9,999	26	3411
ABC COMPOUNDING CO. INC.	MORROW	GA	1,000-9,999	260	2842
AMERICAN NATIONAL CAN CO.	FOREST PARK	GA	10,000-99,999	250	3411
CROWN BEVERAGE PACKAGING	ATLANTA	GA	10,000-99,999	0	3411
CROWN BEVERAGE PACKAGING	PERRY	GA	10,000-99,999	0	3411
CROWN CORK & SEAL CO. INC.	ATLANTA	GA	1,000-9,999	0	3411
FARMERS FAVORITE FERTILIZER INC.	MOULTRIE	GA	100,000-999,000	250	2874
HERAEUS AMERSIL INC.	BUFORD	GA	1,000-9,999	170	3295
MEARL CORP. SFM DIV.	HARTWELL	GA		40	3295
MILLER BREWING CO. MOULTRIE CONTAINER PLANT	MOULTRIE	GA	1,000-9,999	0	3411
NIAGARA NATIONAL CORP.	ATLANTA	G	10,000-99,999	500	2841
NOVAMAX TECHNOLOGIES (U.S.) INC.	ATLANTA	G	10,000-99,999	0	2899
OXFORD CHEMICALS INC.	CHAMBLEE		10,000-99,999	500	2842
PRATT & WHITNEY	COLUMBUS	GA	10,000-99,999	250	3724
TRANSCHEM INDUSTRIES INC.	EAST POINT	GA	1,000-9,999	101	2842
TRENT TUBE DIV.	CARROLLTON	GA	10,000-99,999	325	3317
ZEP MFG. CO.	ATLANTA	GA	10,000-99,999	0	2841
ROCKWELL INTERNATIONAL CORP.	CEDAR RAPIDS	IA	1,000-9,999	1,005	3669
WHINK PRODUCTS CO.	ELDORA	IA	10,000-99,999	15	2842
AMERICAN MICROSYSTEMS INC.	POCATELLO	ID	1,000-9,999	750	3674

ED_002700_00005500-00263

FACILITY	CITY	STATE	MAXIMUM QUANTITY ON SITE (RANGE, POUNDS)	QUANTITY RELEASED OR TRANSFERRED* (POUNDS PER YEAR)	SIC CODE
MICRON TECHNOLOGY INC.	BOISE	ID	10,000-99,999	250	3674
MONSANTO CO.	SODA SPRINGS	ID	100-999	86,000	2819
ZILOG INC.	NAMPA	ID	1,000-9,999	1,006	3674
3M	CORDOVA	IL	100,000-999,000	81,800	2821
ALLIED-SIGNAL INC.	METROPOLIS	IL	100,000-999,000	4,375	2819
ALLIED-SIGNAL INC. DANVILLE WORKS	DANVILLE	IL	100,000-999,000	434	2869
ALUMAX MILL PRODUCTS INC.	MORRIS	IL	1,000-9,999	0	3353
AMERICAN NATIONAL CAN CO.	CHICAGO	IL	10,000-99,999	250	3411
AMOCO PETROLEUM ADDITIVES CO.	WOOD RIVER	IL	1,000-9,999	780	2869
BEECO MFG.	CHICAGO	IL	1,000-9,999	1500	3993
C. J. SAPORITO PLATING CO.	CICERO	IL	1,000-9,999	525	3471
CHEMICAL-WAYS CORP.	LAKE BLUFF	IL	1,000-9,999	5	2842
CHEMTECH INDUSTRIES INC.	EAST SAINT LOUIS	IL	1,000,000-9,999,999	7,100	2819
CLARK OIL & REFINING CORP. BLUE ISLAND	BLUE ISLAND	IL	100,000-999.000	5	2911
CLARK OIL & REFINING CORP. WOOD RIVE	HARTFORD	IL	100.000-999.000	5	2911
CORAL INTERNATIONAL INC.	WAUKEGAN	IL	10,000-99,999	505	2841
MARATHON OIL CO.	ROBINSON	IL	10,000-99,999	1,000	2911
MOBIL JOLIET REFINING CORP.	JOLIET	IL	100,000-999,000	27,394	2911
NATIONAL INTERCHEM CORP.	CHICAGO	IL	10,000-99,999	0	2842
PRECOAT METALS	CHICAGO	IL	1,000-9,999	0	3479
UNO-VEN CO. CHICAGO REFINERY	LEMONT	IL	100,000-999,000	7,826	2911

ED_002700_00005500-00264

FACILITY	CITY	STATE	MAXIMUM QUANTITY ON SITE (RANGE, POUNDS)	QUANTITY RELEASED OR TRANSFERRED* (POUNDS PER YEAR)	SIC CODE
ZENITH ELECTRONICS CORP. RAULAND DIV.	MELROSE PARK	IL	10,000-99,999	3.822	3671
AEROFORGE CORP.	MUNCIE	IN	1,000-9,999	5	3463
ALCOA WARRICK OPERATIONS	NEWBURGH	IN	1,000-9,999	918,540	3334
ALLEGHENY LUDLUM CORP.	NEW CASTLE	IN	10,000-99,999	17,155	3312
AVESTA, INC.	NEW CASTLE	IN	10,000-99.999	87,000	3312
CIRCLE-PROSCO INC.	BLOOMINGTON	IN	1,000-9.999	750	2899
DELCO ELECTRONICS CORP. BYPASS	KOKOMO	IN	100,000-999,000	1,000	3469
FORD ELECTRONICS & REFRIGERATION CORP.	CONNERSVILLE	IN	10,000-99,999	750	3714
HAYNES INTERNATIONAL INC.	KOKOMO	IN	10,000-99,999	7,010	3356
INDIANA FARM BUREAU CO-OP ASSN. INC. MT. VERNON REFINERY	MOUNT VERNON	IN	100,000-999,000	1.500	2911
MARATHON OIL CO.	INDIANAPOLIS	IN	10,000-99,999	2,750	2911
SLATER STEELS FORT WAYNE SP ALLOYS DIV.	FORT WAYNE	IN	10,000-99,999	15,450	3312
THOMSON CONSUMER ELECTRONICS	MARION	IN	10,000-99,999	1 0	3671
WORLD WIDE CHEMICALS	INDIANAPOLIS	IN	1,000-9,999	4,155	2842
ANODIZING INC.	FORT SCOTT	KS	0-99	5	3471
ATOCHEM N.A. WICHITA FACILITY	WICHITA	KS	1,000,000-9,999,999	67,650	2813
BOEING WICHITA	WICHITA	KS	10,000-99,999	10	3728
COASTAL DERBY REFINING CO.	E L DORADO	KS	10,000-99,999	250	2911
COASTAL DERBY REFINING CO.	WICHITA	KS	10,000-99,999	250	2911
	COFFEYVILLE	KS	100,000-999,000	3,300	2911
NATIONAL COOPERATIVE REFINERY ASSOCIATION	MC PHERSON	KS	100,000-999,000	48,259	2911

ED_002700_00005500-00265

FACILITY	CITY	STATE	MAXIMUM QUANTITY ON SITE (RANGE, POUNDS)	QUANTITY RELEASED OR TRANSFERRED* (POUNDS PER YEAR)	SIC CODE
PROSOCO INC.	KANSAS CITY	KS	1,000-9,999	250	2899
TEXACO REFINING & MARKETING INC. EL DORADO PLANT	E L DORADO	KS	100,000-999,000	43,950	2911
TOTAL PETROLEUM INC.	ARKANSAS CITY	KS	10,000-99,999	15,900	2911
A. 0. SMITH CORP. PROTECTIVE COATINGS DIV.	FLORENCE	KY	0-99	575	2899
ALCAN INGOT DIV. SEBREE ALUMINUM PLANT	HENDERSON	KY	0-99	102,830	3334
ASHLAND PETROLEUM CATLETTSBURG REFINERY	ASHLAND	K Y	100,000-999,000	500	2911
ATOCHEM NORTH AMERICA INC.	CALVERT CITY	KY	1,000,000-9,999,999	9,500	2869
COMMONWEALTH ALUMINUM	LEWISPORT	KY	100-999	76,208	3355
DU PONT LOUISVILLE PLANT LOUISVILLE WORKS	LOUISVILLE	KY	1,000,000-9,999,999	859	2822
FLORIDA TILE INDUSTRIES INC. FLORIDA TILE DIV.	LAWRENCEBURG	KY	0-99	123,400	3253
GE CO. KENTUCKY GLASS PLANT	LEXINGTON	KY	10,000-99,999	2,000	3229
MALLINCKRODT SPECIALTY CHEMICALS CO.	PARIS	KY	100,000-999,000	84,305	2869
NATIONAL-SOUTHWIRE ALUMINUM CO.	HAWESVILLE	KY	0-99	473,040	3334
PHILIPS LIGHTING CO.	DANVILLE	KY	10,000-99,999	31,968	3229
AGRICO CHEMICAL CO. DIV. OF FREEPORT MCMORAN	UNCLE SAM	IA	10,000-99,999	5	2874
ALLIEDSIGNAL INC. BATON ROUGE SOUTH	BATON ROUGE	LA	100,000-999,000	500	2869
ALLIED-SIGNAL INC. GEISMAR PLANT	GEISMAR	LA	1,000,000-9,999,999	14,500	2819
BP OIL CO.	BELLE CHASSE	LA	1,000,000-9,999,999	2,340	2911
HAYNES INTERNATIONL INC.	ARCADIA	IA	10,000-99,999	95	3356
LAROCHE CHEMICALS INC.	GRAMERCY	IA	100,000-999,000	45	2812
MARATHON OIL CO. LOUISIANA REFINING DIV.	GARYVILLE	IA	100,000-999,000	61,960	2911

ED_002700_00005500-00266

FACILITY	CITY	STATE	MAXIMUM QUANTITY ON SITE (RANGE, POUNDS)	QUANTITY RELEASED OR TRANSFERRED* (POUNDS PER YEAR)	SIC CODE
MOBIL OIL CORP. CHALMETTE REFINERY	CHALMETTE	LA	1,000,000-9,999,999	1,000	2911
MURPHY OIL USA INC. MERAUX REFINERY	MERAUX	LA	100,000-999,000	750	2911
PLACID REFINING CO.	PORT ALLEN	LA	100,000-999,000	343	2911
VISTA CHEMICAL CO. LAKE CHARLES CHEMICAL COMPLEX	WESTLAKE	LA	1,000,000-9,999,999	1,152	2869
ALLEGRO MICRO SYSTEMS INC.	WORCESTER	MA	1,000-9,999	1,642	3674
ANALOG DEVICES SEMICONDUCTOR	WILMINGTON	MA	1,000-9,999	1,250	3674
AT&T	NORTH ANDOVER	MA	1,000-9,999	255	3661
CROWN CORK & SEAL CO. INC.	LAWRENCE	MA	1,000-9,999	250	3411
DIGITAL EQUIPMENT CORP.	HUDSON	MA	1,000-9,999	40	3674
GTE PRODUCTS CORP. QUARTZ PLANT	IPSWICH	MA		99,290	3229
NORTON CO.	WORCESTER	MA	1,000-9,999	13,325	3291
POLY-METAL FINISHING INC.	SPRINGFIELD	MA	1,000-9,999	500	3471
TELEDYNE RODNEY METALS	NEW BEDFORD	MA	1,000-9,999	49,500	3316
TEXAS INSTRUMENTS INC.	ATTLEBORO	MA	10,000-99,999	39	3341
UNITRODE CORP.	WATERTOWN	MA	1,000-9,999	250	3674
WYMAN-GORDON CO.	NORTH GRAFTON	MA	10,000-99,999	134,650	3462
WYMAN-GORDON CO.	WORCESTER	MA	10,000-99,999	35,500	3462
BALTIMORE SPECIALTY STEELS CORP.	BALTIMORE	MD	10,000-99,999	255	3312
BETHLEHEM STEEL CORP. SPARROWS POINT PLANT	SPARROWS POINT	MD	100,000-999,000	4,400	3312
CROWN BEVERAGE PACKAGING	BALTIMORE	MD	1,000-9,999	0	3411
EASTALCO ALUMINUM CO.	FREDERICK	MD	10,000-99,999	64,000	3334

ED_002700_00005500-00267

FACILITY	CITY	STATE	MAXIMUM QUANTITY ON SITE (RANGE, POUNDS)	QUANTITY RELEASED OR TRANSFERRED* (POUNDS PER YEAR)	SIC CODE
EASTERN STAINLESS CORP.	BALTIMORE	MD	100,000-999,000	23,291	3312
NATIONAL SEMICONDUCTOR CORP.	SOUTH PORTLAND	ME	10,000-99,999	37,120	3674
ACUSTAR INC. MCGRAW GLASS DIV.	DETROIT	MI	1,000-9,999	140	3231
ANCOTECH INC.	DEARBORN HIGHTS	MI	1,000-9,999	43,260	3356
DOW CORNING CORP.	MIDLAND	MI	100,000-999,000	2,055	2869
DU PONT MONTAGUE WORKS	MONTAGUE	MI	1,000,000-9,999,999	1,334	2869
GMC PONTIAC EAST ASSEMBLY	PONTIAC	MI	1,000-9,999	500	3711
HOWMET CORP. PLANT 5	WHITEHALL	MI	10,000-99,999	59,034	3369
J & L SPECIALTY PRODUCTS CORP.	DETROIT	MI	10,000-99,999	250	3312
JET DIE/BARNES GROUP INC.	LANSING	MI	1,000-9,999	2,250	3490
NIPPONDENSO MANUFACTURING USA INC.	BATTLE CREEK	MI	1,000-9,999	250	3714
PARKER & AMCHEM HENKEL CORP.	WARREN	MI	100,000-999,000	3,780	2899
PARKER+AMCHEM	MORENCI	MI	10,000-99,999	500	2899
TOTAL PETROLEUM INC. ALMA REFINERY	ALMA	MI	100,000-999,000	5,500	2911
UPJOHN CO. PRODUCTION FACILITY	PORTAGE	MI	10,000-99,999	0	2634
3M CHEMOLITE CENTER	COTTAGE GROVE	MN	100.000-999.000	5,323	2899
AMERICAN NATIONAL CAN CO.	SAINT PAUL	MN	10,000-99,999	250	3411
ASHLAND PETROLEUM CO. ST. PAUL PARK REFINERY	SAINT PAUL PARK	MN	10,000-99,999	250	2911
CROWN BEVERAGE PACKAGING	SAINT PAUL	MN	10,000-99,999	0	3411
FREMONT INDUSTRIES INC.	SHAKOPEE	MN	1,000-9,999	0	2642
AMERICAN NATIONAL CAN CO.	PEVELY	MO	10,000-99,999	250	3411

ED_002700_00005500-00268

FACILITY	CITY	STATE	MAXIMUM QUANTITY ON SITE (RANGE. FOUNDS)	QUANTITY RELEASED OR TRANSFERRED* (POUNDS PER YEAR)	SIC CODE
AT&T MICROELECTRONICS KANSAS CITY WORKS	LEES SUMMIT	MO	1,000-9,999	230	3678
BRIGGS & STRATTON CORP.	POPLAR BLUFF	MO	1,000-9,999	255	3519
COMBUSTION ENGINEERING NFM HEMATITE	HEMATITE	MO	100-999	7,200	2819
HITCHINER MFG. CO. INC.	O'FALLON	MO	1,000-9,999	10	3369
KO MFG. INC.	SPRINGFIELD	MO		10	2841
MALLINCKRODT SPECIALTY CHEMICALS CO.	SAINT LOUIS	MO	100,00-999,000	5,132	2869
MCDONNELL DOUGLAS CORP.	SAINT LOUIS	MO	10,000-99,999	21,400	3721
MEMC ST. PETERS PLANT	O'FALLON	MO	10,000-99,999	2,000	3674
METAL CONTAINER CORP.	ARNOLD	MO	10,000-99,999	84	3411
NORANDA ALUMINUM INC.	NEW MADRID	MO	0-99	277.044	3334
REYNOLDS METALS CO. KC. CAN PLANT	KANSAS CITY	MO	10,000-99,999	24	3411
TRADCO INC.	WASHINGTON	MO	10,00-99,999	521	3356
WILLERT HOME PRODUCTS	SAINT LOUIS	MO	100-999	0	2879
AMERICAN NATIONAL CAN CO.	OLIVE BRANCH	MS	10,000-99,999	250	3411
CROWN CORK & SEAL CO. INC.	BATESVILLE	MS	10,000-99,999	750	3411
CENEX REFINERY	LAUREL	MT	100,000-999,000	19,500	2911
COLUMBIA FALLS ALUMINUM CO.	COLUMBIA FALLS	MT	1,000-9,999	372,100	3334
CONOCO BILLINGS REFINERY	BILLINGS	MT	100,000-999,000	8,400	2911
EXXON BILLINGS REFINERY BILLINGS REFINERY	BILLINGS	MT	10,000-99,999	40,900	2911
RHONE-POULENC BASIC CHEMICALS	SILVER BOW	MT	100-999	95,300	2819
ALCOA BADIN WORKS	BADIN	NC	0-99	185,644	3334

ED_002700_00005500-00269

FACILITY	CITY	STATE	MAXIMUM QUANTITY ON SITE (RANGE, POUNDS)	QUANTITY RELEASED OR TRANSFERRED* (POUNDS PER YEAR)	SIC CODE
ARROCHEM INC.	MOUNT HOLLY	NC	100,000-999,000	5	2841
CYPRUS FOOTE MINERAL CO.	KINGS MOUNTAIN	NC	10,000-99,999	5	2819
GE CO.	WILMINGTON	NC	10,000-99,999	2,100	2819
MILLER BREWING CO.	REIDSVILLE	NC	1,000-9,999	0	3411
MITSUBISHI SEMICONDUCTOR AMERICA INC.	DURHAM	NC	1,000-9,999	5	3674
PPG INDUSTRIES INC.	SHELBY	NC	1,000-9,999	255	3229
REYNOLDS METALS CO. SALISBURY CAN PLANT	SALISBURY	NC	1,000-9,999	31	3411
STROH BREWERY CO.	WINSTON-SALEM	NC	10,000-99,999	0	3411
TELEDYNE ALLVAC	MONROE	NC	1,000-9,999	0	3356
TEXASGULF INC. PHOSPHATE OPERATIONS	AURORA	NC	10,000-99,999	1,550	2874
AMOCO OIL CO.	MANDAN	ND	10,000-99,999	3.978	2911
REINKE MFG. CO. INC.	DESHLER	NE	0-99	255	3523
UNITRODE INTEGRATED CIRCUITS CORP.	MERRIMACK	NH	1,000-9,999	255	3674
ALLIED-SIGNAL INC. ELIZABETH	ELIZABETH	NJ	10,000-99,999	45	2869
AMERICAN NATIONAL CAN CO.	MONMOUTH JUNCTION	NJ	10,000-99,999	250	3411
AMERICAN NATIONAL CAN CO.	PISCATAWAY	NJ	10,000-99,999	250	3411
AUSIMONT USA INC.	THOROFARE	NJ	1,000,000-9,999,999	113	2821
CERAGRAPHIC INC.	HACKENSACK	NJ	1,000-9,999	29,011	3200
CP CHEMICALS INC.	SEWAREN	NJ	10,000-99,999	500	2819
CROWN CORK & SEAL CO. INC.	NORTH BERGEN	NJ	1,000-9,999	0	3411
DU PONT CHAMBERS WORKS CHAMBERS WORKS	DEEPWATER	NJ	100,00-999,000	3,172	2865

ED_002700_00005500-00270

FACILITY	CITY	STATE	MAXIMUM QUANTITY ON SITE (RANGE, POUNDS)	QUANTITY RELEASED OR TRANSFERRED* (POUNDS PER YEAR)	SIC CODE
ESSEX CHEMICAL CORP.	PAULSBORO	NJ	100,000-999,000	1,510	2819
ICI AMERICAS INC.	BAYONNE	NJ	100-999	255	2821
J.T. BAKER INC.	PHILLIPSBURG	NJ	10,000-99,999	75	2819
KRAMER CHEMICALS INC. DELKAY DIV.	CAMDEN	NJ	10,000-99,999	500	2819
MOBIL OIL CORP.	PAULSBORO	NJ	100,000-999,000	250	2911
PROSOCO INC.	SOUTH PLAINFIELD	NJ	1,000-9,999	250	2899
SHIELDALLOY METALLURGICAL CORP.	NEWFIELD	NJ	0 - 99	250	3312
SWEPCO TUBE CORP.	CLIFTON	NJ	10,000-99,999	59,725	3498
GIANT REFINING CO. CINIZA	GALLUP	NM	10,000-99,999	4,199	2911
JNTEL CORP.	RIO RANCHO	NM	1,000-9,999	1,005	3674
NAVAJO REFINING CO.	ARTESIA	NM	10,000-99,999	1,790	2911
SIGNETICS CO.	ALBUQUERQUE	NM	1,000-9,999	4,400	3674
KENNAMETAL INC. NEVADA REFINERY	FALLON	NV	10,000-99,999	1,250	
AL TECH SPECIALTY STEEL CORP.	DUNKIRK	NY	1,000-9,999	260	3315
AL TECH SPECIALTY STEEL CORP.	WATERVLIET	NY	10,000-99,999	3,800	3312
ALCOA	MASSENA	NY	100,000-999,000	114,578	3334
ALLIED-SIGNAL INC.	BUFFALO	NY	1,000-9,999	140	2869
AMPHENOL CORP. BCO	SIDNEY	NY	1,000-9,999	3,505	3678
CARBORUNDUM CO.	NIAGARA FALLS	NY	1,00-9,999	505	3297
CORNING INC.	CORNING	NY	10,000-99,999	25,219	3231
DU PONT NIAGRA FALLS	NIAGARA FALLS	NY	1,000-9,999	368	2812

ED_002700_00005500-00271

FACILITY	CITY	STATE	MAXIMUM QUANTITY ON SITE (RANGE, POUNDS)	QUANTITY RELEASED OR TRANSFERRED* (POUNDS PER YEAR)	SIC CODE
GCF INC.	BUFFALO	NY		10	3471
GMC HARRISON RADIATOR DIV.	LOCKPORT	NY	1,000-9,999	255	3714
GRUMMAN AEROSPACE CORP.	BETHPAGE	NY	100,000-999,000	42,398	3721
IBM EAST FISHKILL FACILITY	HOPEWELL JUNCTION	NY	10,000-99,999	450	3674
IMAGING & SENSING TECHNOLOGY DIV.	HORSEHEADS	NY	1,000-9,999	1,500	3663
METAL CONTAINER CORP. NWB	NEW WINDSOR	NY	1,000-9,999	14	3411
MILLER BREWING CO. CONTAINER DIV.	FULTON	NY	10,000-99,999	0	3411
OCCIDENTAL CHEMICAL CORP. NIAGARA PLANT	NIAGARA FALLS	NY	1,000,000-9,999,999	2,057	2812
PHILIPS LIGHTING CO.	BATH	NY	10,000-99,999	1,750	3641
REYNOLDS METALS CO.	MASSENA	NY	100-999	88,000	3334
REYNOLDS METALS CO. WALLKILL CAN PLANT	MIDDLETOWN	NY	1,000-9,999	34	3411
SPECIAL METALS CORP.	NEW HARTFORD	NY	1,000-9,999	14,050	3313
TOSHIBA DISPLAY DEVICES INC.	HORSEHEADS	NY	1,000-9,999	1,863	3671
UTICA CORP.	WHITESBORO	NY	1,000-9,999	56,050	3724
WESTINGHOUSE ELECTRIC CORP. HORSEHEADS OPERATIONS	HORSEHEADS	NY	0-99	10	3699
AIRFOIL FORGING TEXTRON INC.	EUCLID	OH	1,000-9,999	81,090	3724
ALCAN ROLLED PRODUCTS CO.	WARREN	OH	10,000-99,999	10	3354
ALCOA	CLEVELAND	OH	10,000-99,999	40,565	3463
AMERICAN MATSUSHITA ELECTRONICS CORP.	TROY	OH	1,000-9,999	5,955	3672
AMERICAN NATIONAL CAN CO.	FREMONT	OH	10,000-99,999	250	3411

ED_002700_00005500-00272

FACILITY	CITY	STATE	MAXIMUM QUANTITY ON SITE (RANGE, POUNDS)	QUANTITY RELEASED OR TRANSFERRED* (POUNDS PER YEAR)	SIC CODE
AMERICAN NATIONAL CAN CO.	WHITEHOUSE	OH	10,000-99,999	250	3411
AMERIMARK BUILDING PRODUCTS INC.	GNADENHUTTEN	OH	1,000-9,999	260	3499
ARMCO ADVANCED MATERIALS CO.	ZANESVILLE	OH	10,000-99,999	854,435	3312
ASHLAND PETROLEUM CO. CANTON REFINERY	CANTON	OH	10,000-99,999	500	2911
ASTRO METALLURGICAL INC.	WOOSTER	OH	1,000-9,999	30,900	3499
BETZ LABORATORIES INC. NEW PHILADELPHIA	NEW PHILADELPHIA	OH	10,000-99,999	523	2899
BRUSH WELLMAN INC.	ELMORE	OH	100,000-999,000	5	3339
CINCINNATI SEMICONDUCTOR INC.	MAINEVILLE	OH	1,000-9,999	2,950	3644
COLD METAL PRODUCTS CO. INC.	YOUNGSTOWN	OH	10,000-99,999	14,335	3316
COSHOCTON STAINLESS DIV.	COSHOCTON	OH	10,000-99,999	3,055	3316
CROWN BEVERAGE PACKAGING	CINCINNATI	OH	10,000-99,999	0	3411
ENGELHARD CORP.	CLEVELAND	OH	100,000-999,000	885	2819
ENGELHARD CORP.	ELYRIA	OH	10,000-99,999	255	2819
EPCO EXTRUSION PAINTING CO.	BOARDMAN	OH	1,000-9,999	0	3354
GE CO. LIGHTING WILLOUGHBY QUARTZ PLANT	WILLOUGHBY	OH		750	3229
GE CO. SUPERABRASIVES	WORTHINGTON	OH	100,000-999,000	521	3291
GMC DELCO MORAINE NDH DIV. SOUTH	DAMON	OH	1,000-9,999	255	3714
HARRIS SEMICONDUCTOR INTERNATIONAL INC.	FINDLAY	OH	10,000-99,999	326	3674
J & L SPECIALTY PRODUCTS CORP.	LOUISVILLE	OH	100,000-999,000	250	3312
LTV STEEL CO. INC. CLEVELAND TUBULAR PLANT	CLEVELAND	OH	1,000-9,999	8,212	3312
LUCERNE PRODUCTS INC.	HUDSON	OH	100-999	4,305	3699

ED_002700_00005500-00273

FACILITY	CITY	STATE	MAXIMUM QUANTITY ON SITE (RANGE, POUNDS)	QUANTITY RELEASED OR TRANSFERRED* (POUNDS PER YEAR)	S I C CODE
MAN-GILL CHEMICAL CO.	CLEVELAND	OH	1,000-9,999	5	2899
METAL CONTAINER CORP.	COLUMBUS	OH	10,000-99,999	84	3411
OI-NEG TV PRODUCTS INC.	COLUMBUS	OH	10,000-99,999	86,010	3229
ORMET CORP.	HANNIBAL	OH		295,159	3334
PHILIPS DISPLAY COMPONENTS CO.	OTTAWA	OH	10,000-99,999	10,250	3672
REP. ENGINEERED STEELS INC. MASSILLON CFB	MASSILLON	OH	10,000-99,999	18,325	3316
RMI TITANIUM CO. NILES PLANT	NILES	OH	10,000-99,999	44,036	3356
SAWYER RESEARCH PRODUCTS INC.	EASTLAKE	OH	10,000-99,999	26,525	3679
SUPERIOR TUBE CO.	WAPAKONETA	OH	10,000-99,999	3,500	3317
TUNGSTEN PRODUCTS PLANT	EUCLID	OH	1,000-9,999	500	3399
ZIRCOA INC.	SOLON	OH	10,000-99,999	255	3297
AMERICAN NATIONAL CAN CO.	OKLAHOMA CITY	OK	10,000-99,999	250	3411
CONOCO PONCA CITY REFINERY	PONCA CITY	OK	100,000-999,000	16,000	2911
KERR-MCGEE REFINING CORP.	WYNNEWOOD	OK	100,000-999,000	2,000	2911
MCDONNELL DOUGLAS TULSA	TULSA	OK	10,000-99,999	45,150	3721
OZARK MAHONING CO. FORMERLY FORMERLY OZARK-MAHONING CO.	TULSA	OK	10,000-99,999	1,450	2819
SEQUOYAH FUELS CORP.	GORE	OK	100,000-999,000	20,814	2819
SUN REFINING & MARKETING CO.	TULSA	OK	100,000-999,000	4,060	2911
TOTAL PETROLEUM INC.	ARDMORE	OK	1,000,000-9,999,999	1,364	2911
FUJITSU MICROELECTRONICS INC.	GRESHAM	OR	1,000-9,999	864	3670
HEWLETT PACKARD CO.	CORVALLIS	OR	100-999	305	3674

ED_002700_00005500-00274

FACILITY	CITY	STATE	MAXIMUM QUANTITY ON SITE (RANGE, POUNDS)	QUANTITY RELEASED OR TRANSFERRED* (POUNDS PER YEAR)	SIC CODE
INTEL CORP.	ALOHA	OR	100-999	520	3674
NORTHWEST ALUMINUM CO. INC.	THE DALLES	OR	100-999	19,000	3334
REYNOLDS METALS CO.	TROUTDALE	OR	100,000-999,000	189,000	3334
SILTEC SILICON	SALEM	OR	1,000-9,999	605	3674
TELEDYNE WAH CHANG ALBANY	ALBANY	OR	10,000-99,999	4,500	3339
TITANIUM BUSINESS OPERATIONS	MILWAUKIE	OR	10,000-99,999	1,139	3369
WACKER SILTRONIC CORP.	PORTLAND	OR	1,000-9,999	5,093	3674
AIR PRODUCTS & CHEMICALS INC.	TAMAQUA	PA	100,000-999,000	122	2813
ALEX C. FERGUSSON INC.	FRAZER	PA	1,000-9,999	505	2842
ALLEGHENY LUDLUM CORP.	BRACKENRIDGE	PA	10,000-99,999	378,955	3312
ALLEGHENY LUDLUM CORP.	VANDERGRIFT	PA	10,000-99,999	79,555	3312
ALLEGHENY LUDLUM CORP. LEECHBURG WORKS	LEECHBURG	PA	100,000-999,000	71,455	3312
ALLEGRO MICROSYSTEMS INC.	WILLOW GROVE	PA	1,000-9,999	6,477	3674
AMERICAN NATIONAL CAN CO.	FOGELSVILLE	PA	10,000-99,999	250	3411
AMERICAN PLATING INC.	ZELIENOPLE	PA	100-999	2,200	3471
ARMCO ADVANCED MATERIALS CO.	BUTLER	PA	100,000-999,000	73,580	3312
ARMCO ADVANCED MATERIALS CO.	BUTLER	PA	10,000-99,999	12,250	3312
ASHLAND CHEMICAL INC.	EASTON	PA	100,000-999,000	500	2819
AT&T MICROELECTRONICS MICROELECTRONICS	ALLENTOWN	PA	1,000-9,999	2,800	3674
AT&T MICROELECTRONICS MICROELECTRONICS	READING	PA	10,000-99,999	64,250	3674
BP OIL CO. MARCUS HOOK REFINERY	TRAINER	PA	1,000,000-9,999,999	1,200	2911

ED_002700_00005500-00275

FACILITY	CITY	STATE	MAXIMUM QUANTITY ON SITE (RANGE, POUNDS)	QUANTITY RELEASED OR TRANSFERRED* (POUNDS PER YEAR)	SIC CODE
BULK CHEMICALS INC.	MOHRSVILLE	PA	10,000-99,999	0	2899
BULLEN COMPANIES	FOLCROFT	PA	1,000-9,999	1,000	2842
CABOT CORP.	BOYERTOWN	PA	1,000,000-9,999,999	31,157	3339
CARPENTER TECHNOLOGY CORP.	READING	PA	100,000-999,000	27,808	3312
CHEVRON USA	PHILADELPHIA	PA	100,000-999,000	255	2911
CORCO CHEMICAL CORP.	FAIRLESS HILLS	PA	10,000-99,999	500	2819
CORNING INC.	CHARLEROI	PA	0-99	66,660	3229
CROWN CORK & SEAL CO. INC.	PHILADELPHIA	PA	1,000-9,999	0	3411
DYNAMET INC.	WASHINGTON	PA	1,000-9,999	43,880	3356
GE CO.	MALVERN	PA	1,000-9,999	255	3613
GRINNELL CORP. MFG. DIV.	COLUMBIA	PA	1,000-9,999	687	3322
GTE PRODUCTS CORP.	WELLSBORO	PA	10,000-99,999	9,450	3229
GTE PRODUCTS CORP. CHEM & MET DIV.	TOWANDA	PA	1,000-9,999	0	3339
HANDY & HARMAN TUBE CO.	NORRISTOWN	PA	100-999	21,259	3317
HARRIS SEMICONDUCTOR INTERNATIONAL INC.	MOUNTAIN TOP	PA	1,000-9,999	480	3674
HEINTZ CORP.	PHILADELPHIA	PA	1,000-9,999	250	3724
J & L SPECIALTY PRODUCTS CORP.	MIDLAND	PA	100,000-999,000	150,250	3312
JESSOP STEEL CO.	WASHINGTON	PA	10,000-99,999	44,500	3312
LENOX CRYSTAL	MOUNT PLEASANT	PA	1,000-9,999	477	3229
LUKENS STEEL CO.	COATESVILLE	PA	10,000-99,999	151,466	3312
MOLYCORP INC.	YORK	PA	1,000-9,999	40	2819

ED_002700_00005500-00276

FACILITY	CITY	STATE	MAXIMUM QUANTITY ON SITE (RANGE, POUNDS)	QUANTITY RELEASED OR TRANSFERRED* (POUNDS PER YEAR)	SIC CODE
NF & M INTERNATIONAL INC.	MONACA	PA	1,000-9,999	255	3399
OLIN HUNT SPECIALTY PRODUCTS INC.	NAZARETH	PA	100,000-999,000	1,198	2819
PITTSBURGH FLATROLL CO. STEEL DIV.	PITTSBURGH	PA	10,000-99,999	500	3312
POWEREX INC.	YOUNGWOOD	PA	1,000-9,999	250	3674
SANDVIK STEEL CO.	CLARKS SUMMIT	PA	10,000-99,999	620	3317
SHARON STEEL CORP. DAMASCUS TUBE DIV. PLANT #1	GREENVILLE	PA	1,000-9,999	41,543	3317
SUPERIOR TUBE CO.	COLLEGEVILLE	PA	100,000-999,000	125,907	3841
TELEDYNE COLUMBIA-SUMMERILL	SCOTTDALE	PA	1,000-9,999	22,500	3317
THOMSON CONSUMER ELECTRONICS INC.	SCRANTON	PA	1,000-9,999	255	3672
WASHINGTON STEEL CORP.	WASHINGTON	PA	10,000-99,999	500	3316
WESTINGHOUSE ELECTRIC CORP.	BLAIRSVILLE	PA	1,000-9,999	19,100	3356
AMERICAN NATIONAL CAN CO.	CATANO	PR	10,000-99,999	250	3411
ANAQUEST CARIBE INC.	GUAYAMA	PR	10,000-99,999	10	2834
CROWN CORK DE PUERTO RICO INC.	CAROLINA	PR	100-999	250	3411
SCHERING INDUSTRIAL DEVELOPMENT CORP.	MANATI	PR	1,000-9,999	500	2833
CHERRY SEMICONDUCTOR CORP.	EAST GREENWICH	RI	1,000-9,999	250	3674
GTE PRODUCTS CORP.	CENTRAL FALLS	RI	10,000-99,999	16,100	3229
ALUMAX OF SOUTH CAROLINA	GOOSE CREEK	SC	0-99	78,917	3334
AMERICAN NATIONAL CAN CO.	BISHOPVILLE	SC	10,000-99,999	250	3411
CAROLINA METALS INC.	BARNWELL	SC	1,000-9,999	111	3399
HALOCARBON PRODUCTS CORP.	NORTH AUGUSTA	SC	10,000-99,999	817	2869

ED_002700_00005500-00277

FACILITY	CITY	STATE	MAXIMUM QUANTITY ON SITE (RANGE, POUNDS)	QUANTITY RELEASED OR TRANSFERRED* (POUNDS PER YEAR)	SIC CODE
MEMC ELECTRONIC MATERIALS INC.	MOORE	SC	10,000-99,999	2,751	3674
SPARTANBURG STEEL PRODUCTS INC.	SPARTANBURG	SC	10,000-99,999	1,005	3411
WESTINGHOUSE COMMERCIAL NUCLEAR FUEL DIV.	COLUMBIA	SC	10,000-99,999	260	3219
ALCOA	ALCOA	TN	1,000-9,999	577,848	3334
BRISTOL METALS INC.	BRISTOL	TN	10,000-99,999	9,300	3317
MAPCO PETROLEUM INC.	MEMPHIS	TN	10,000-99,999	41	2911
MIDLAB INC.	SWEETWATER	TN	10,000-99,999	10	2842
OCCIDENTAL CHEMICAL CORP.	COLUMBIA	TN	100-999	198,423	2819
OXFORD TENNELEC/NUCLEUS INC.	OAK RIDGE	TN	100-999	6,770	3810
STAUFFER CHEMICAL CO, FURNACE PLANT	MOUNT PLEASANT	TN	0-99	16,250	2819
TIMET INC.	MORRISTOWN	TN		500	3356
USDOE Y-12 PLANT	OAK RIDGE	TN	1,000-9,999	3,146	3499
ACI CHEMICALS INC.	LANCASTER	TX	1,000-9,999	10	2841
ADVANCED MICRO DEVICES INC.	AUSTIN	TX	10,000-99,999	140,500	3674
ALCOA POINT COMFORT OPERATIONS	POINT COMFORT	TX	1,000-9,999	3,550	2819
ALCOA ROCKDALE WORKS	ROCKDALE	TX	0-99	1,305,634	3334
AMERICAN NATIONAL CAN CO.	HOUSTON	TX	10,000-99,999	250	3411
AMOCO CHEMICAL CO. TEXAS CITY PLANT B	TEXAS CITY	TX	10,000-99,999	483	2865
AMOCO OIL CO. TEXAS CITY REFINERY	TEXAS CITY	TX	1,000,000-9,999,999	2,400	2911
ASHLAND CHEMICAL E & LP	DALLAS	TX	1,000-9,999	21	2819
CELANESE ENGINEERING RESINS INC.	BISHOP	TX	10,000-99,999	8,840	2869

ED_002700_00005500-00278

FACILITY	CITY	STATE	MAXIMUM QUANTITY ON SITE (RANGE, POUNDS)	QUANTITY RELEASED OR TRANSFERRED* (POUNDS PER YEAR)	SIC CODE
CHAMPLIN REFINING & CHEMICALS INC.	CORPUS CHRISTI	TX	100,000-999,000	0	2911
CHEMICAL DYNAMICS INC.	WEATHERFORD	TX	10,000-99,999	2,000	3471
CHEVRON USA INC. PORT ARTHUR REFINERY	PORT ARTHUR	TX	100,000-999,000	11,250	2911
COASTAL REFINING & MARKETING INC.	CORPUS CHRISTI	TX	10,000-99,999	0	2911
COOPER INDUSTRIES CAMERON FORGED PRODUCTS DIV.	HOUSTON	TX	10,000-99,999	7,500	3462
CROWN BEVERAGE PACKAGING	LONGVIEW	TX	10,000-99,999	0	3411
CROWN BEVERAGE PACKAGING	SUGAR LAND	TX	10,000-99,999	0	3411
CROWN CENTRAL PETROLEUM HOUSTON REFINERY	PASADENA	TX	100,000-999,000	1,486	2911
CROWN CORK & SEAL CO. INC.	ABILENE	TX	1,000-9,999	0	3411
CROWN CORK & SEAL CO. INC.	CONROE	TX	100-999	0	3411
CYPRESS SEMICONDUCTOR TEXAS INC.	ROUND ROCK	TX	1,000-9,999	10,184	3674
DALLAS SEMICONDUCTOR CORP.	DALLAS	TX	100-99	54	3674
DIAMOND SHAMROCK REFINING & MARKETING CO. THREE RIVERS	THREE RIVERS	TX	100,000-999,000	4,700	2911
DU PONT CORPUS CHRISTI PLANT CORPUS CHRISTI PLANT	INGLESIDE	TX	1,000,000-9,999,999	845	2869
DU PONT IA PORTE PLANT IA PORTE PLANT	LA PORTE	TX	10,000,000-49,999,999	2,931	2819
FINA OIL & CHEMICAL CO.	BIG SPRING	TX	1,000-9,999	4,840	2911
GENERAL DYNAMICS FT. WORTH DIV. USAF PLANT 4	FORT WORTH	TX	10,000-99,999	1,400	3721
GOODYEAR TIRE & RUBBER CO. BEAUMONT CHEMICAL PLANT	BEAUMONT	TX	10,000-99,999	140	2822
HITACHI SEMICONDUCTOR AMERICA INC.	IRVING	TX	1,000-9.999	2,823	3674

ED_002700_00005500-00279

FACILITY	CITY	STATE	MAXIMUM QUANTITY ON SITE (RANGE, POUNDS)	QUANTITY RELEASED OR TRANSFERRED* (POUNDS PER YEAR)	SIC CODE
KOCH REFINING CO.	CORPUS CHRISTI	TX	100,000-999,000	59	2911
MANNINGTON CERAMIC CO.	MOUNT VERNON	TX	0-99	27,440	3253
MARATHON PETROLEUM CO.	TEXAS CITY	TX	100,000-999,000	19,250	2911
MILLER BREWING CO. FORT WORTH CONTAINER DIV.	FORT WORTH	TX	1,000-9,999	5	3411
MONSANTO CO.	ALVIN	TX	100,000-999,000	6,670	2869
MOTOROLA INC.	AUSTIN	TX	10,000-99,999	76,170	3674
NATIONAL SEMICONDUCTOR CORP.	ARLINGTON	TX	10,000-99,999	590	3674
PEARL CONTAINER CO.	SAN ANTONIO	TX	1,000-9,999	0	3411
PHIBRO REFINING INC.	TEXAS CITY	TX	100,000-999,000	0	2911
PHILLIPS 66 CO.	BORGER	TX	1,000,000-9,999,999	4,327	2911
PHILLIPS 66 CO.	SWEENY	TX	100,000-999,000	3,300	2911
PRECOAT METALS	HOUSTON	TX	1,000-9,999	0	3479
SGS-THOMSON MICROELECTRONICS INC.	CARROLLTON	TX	1,000-9,999	260	3674
SHELL OIL CO. ODESSA REFINERY	ODESSA	TX	100,000-999,000	870	2911
SONY MICROELECTRONICS CORP.	SAN ANTONIO	TX	100-999	505	3674
SOUTHWESTERN REFINING CO. INC.	CORPUS CHRISTI	TX	100,000-999,000	500	2911
STROH CONTAINER CO.	LONGVIEW	TX	10,000-99,999	0	3411
TEXAS INSTRUMENTS INC.	DALLAS	TX	100,000-999,000	3,300	3674
TEXAS INSTRUMENTS INC.	LUBBOCK	TX	10,000-99,999	1,000	3674
TEXAS INSTRUMENTS INC.	STAFFORD	TX	10,000-99,999	35,500	3674
TEXAS INSTRUMENTS INC. SHERMAN	SHERMAN	TX	1,000-9,999	3,375	3674

ED_002700_00005500-00280

FACILITY	CITY	STATE	MAXIMUM QUANTITY ON SITE (RANGE, POUNDS)	QUANTITY RELEASED OR TRANSFERRED* (POUNDS PER YEAR)	SIC CODE
VALERO REFINING CO.	CORPUS CHRISTI	TX	100,000-999,000	515	2911
VIRGINIA KMP CORP.	DALLAS	TX	10,000-99,999	500	3585
VLSI TECHNOLOGY INC.	SAN ANTONIO	TX	100-999	255	3674
BIG WEST OIL CO.	NORTH SALT LAKE	UT	10,000-99,999	2,636	2911
CHEVRON USA INC. SALT LAKE REFINERY	SALT LAKE CITY	UT	100,000-999,000	9,450	2911
FLAMECO (BLDG.#2)	OGDEN	UT	1,000-9,999	22,192	3728
INTERSTATE BRICK CO.	WEST JORDAN	UT	0-99	11,580	3251
NATIONAL SEMICONDUCTOR	WEST JORDAN	UT	1,000-9,999	1,831	3674
PHILLIPS 66 CO. WOODS CROSS REFINERY	WOODS CROSS	UT	100,000-999,000	4,700	2911
SIGNETICS CO.	OREM	UT	10,000-99,999	1,805	3674
WESTERN ZIRCONIUM	OGDEN	UT	10,000-99,999	500	3356
BABCOCK & WILCOX CO. MT. ATHOS FACILITY	LYNCHBURG	VA	10,000-99,999	6	3443
BALL PACKAGING PRODUCTS GROUP MCD	WILLIAMSBURG	VA	1,000-9,999	10	3411
HOWMET CORP. HAMPTON CASTING DIV.	HAMPTON	VA	10,000-99,999	4,815	3324
TEXASGULF INC. SALTVILLE OPERATIONS	SALTVILLE	VA	0-99	1,209	2874
GE CO.	NORTH CLARENDON	VT	10,000-99,999	8,112	3724
IBM CORP.	ESSEX JUNCTION	VT	100,000-999,000	2,750	3674
ALCOA WENATCHEE WORKS	WENATCHEE	WA	0-99	223,300	3334
AMERICAN NATIONAL CAN CO.	KENT	WA	10,000-99,999	250	3411
BOEING COMMERCIAL AIRPLANES FABRICATION	AUBURN	WA	1,000-9,999	22,700	3728
BOEING DEFENSE & SPACE GROUP PLANT II	SEAITLE	WA	1,000-9,999	7,430	3728

ED_002700_00005500-00281

FACILITY	CITY	STATE	MAXIMUM QUANTITY ON SITE (RANGE, POUNDS)	QUANTITY RELEASED OR TRANSFERRED* (POUNDS PER YEAR)	SIC CODE
BP OIL CO. FERNDALE REFINERY	FERNDALE	WA	100,000-999,000	8,000	2911
COLUMBIA ALUMINUM CORP.	GOLDENDALE	WA	0-99	89,000	3334
CROWN BEVERAGE PACKAGING	OLYMPIA	WA	10,000-99,999	0	3411
INTALCO ALUMINUM CORP.	FERNDALE	WA	0-99	62,345	3334
KAISER ALUMINUM & CHEMICAL CORP.	TACOMA	WA	0-99	28,200	3334
KAISER ALUMINUM & CHEMICAL MEAD WORKS	MEAD	WA	0-99	372,000	3334
NATIONAL SEMICONDUCTOR CORP.	PUYALLUP	WA	1,000-9,999	1,480	3674
REYNOLDS METALS CO. REDUCTION PLANT	LONGVIEW	WA	0-99	260,255	3334
REYNOLDS METALS CO. SEATTLE CAN PLANT	KENT	WA	10,000-99,999	40	3411
SANDVIK SPECIAL METALS CORP.	FINLEY	WA	10,000-99,999	500	3356
SEH AMERICA INC.	VANCOUVER	WA	10,000-99,999	21.179	3674
VANALCO INC.	VANCOUVER	WA	0-99	469,403	3334
WESTERN PNEUMATIC TUBE CO.	KIRKLAND	WA	1,000-9,999	14,800	3498
BRIGGS & STRATTON CORP.	WAUWATOSA	WI	1,000-9,999	141	3519
CHEMICAL PACKAGING CORP.	MILWAUKEE	WI	1,000-9,999	515	2842
CROWN BEVERAGE PACKAGING	LA CROSSE	WI	10,000-99,999	0	3411
CROWN CORK & SEAL CO. INC.	GLENDALE	WI	10,000-99,999	0	3411
KOHLER CO.	KOHLER	WI	1,000-9,999	18,030	3261
LADISH CO. INC.	CUDAHY	WI	100,000-999,000	500	3462
METAL CONTAINER CORP. FTA	FORT ATKINSON	WI	1,000-9,999	10	3411
MILLER BREWING CO. MILWAUKEE CONTAINER PLANT	MILWAUKEE	WI	1,000-9.999	5	3411

ED_002700_00005500-00282

FACILITY	CITY	STATE	MAXIMUM QUANTITY ON SITE (RANGE, POUNDS)	QUANTITY RELEASED OR TRANSFERRED* (POUNDS PER YEAR)	SIC CODE
MURPHY OIL USA INC. SUPERIOR REFINERY	SUPERIOR	WI	10,000-99,999	0	2911
NORTHERN ENGRAVING CORP.	SPARTA	WI	1,000-9,999	340	3479
TRENT TUBE	EAST TROY	WI	10,000-99,999	5,263	3317
US. CHROME CORP. OF WISCONSIN	FOND DU LAC	WI	1,000-9,999	10	3471
3M	CHARLES TOWN	WV	1,000-9,999	5	3555
DU PONT WASHINGTON WORKS	WASHINGTON	WV	0-99	43,021	2821
EAGLE CONVEX GLASS SPECIALTY CO.	CLARKSBURG	WV	10,000-99,999	10	
INCO ALLOYS INTERNATIONAL INC.	HUNTINGTON	WV	10,000-99,999	2,494	3356
RAVENSWOOD ALUMINUM CORP.	RAVENSWOOD	WV	0-99	81,126	3334
CHEVRON CHEMICAL CO.	ROCK SPRINGS	WY	0-99	7,700	2874
CROWN CORK & SEAL CO. INC.	WORLAND	WY	1,000-9,999	0	3411
FRONTIER REFINING INC.	CHEYENNE	WY	1,000-9,999	0	2911
Total Quantity Released:				**12,658,031**	

• Total of annual quantities reported as fugitive or non-point air emissions, stack or point air emissions, discharges to receiving streams or water bodies, underground injection on-site, releases to land on-site, discharges to POTW, and other transfers in waste to off-site locations.

Source: Toxic Release Inventory, 1990

Note: TRI reports exclude all non-manufacturing facilities and those manufacturers with fewer than 10 employees. The threshold for reporting for manufacturing or processing a TRI listed chemical was 25,000 pounds and the threshold for reporting for otherwise using the chemical is 10,000 pounds.

ED_002700_00005500-00283

APPENDIX VIII
U.S. PRODUCERS OF FLUOROCARBONS AND OF OTHER CHEMICALS MANUFACTURED WITH HYDROGEN FLUORIDE OR CHLOROFLUOROCARBONS

Exhibit VIII-1 of this appendix presents U.S. producers of fluorocarbons, with their location and production capacity. Exhibit VIII-2 lists some other chemicals made directly or indirectly from HF, manufacturers of these chemicals, and the source of the fluorine (i.e., HF or an HF product). The chemicals in **Exhibit** VIII-2 are examples of chemicals produced from HF; there are many other chemicals, including nearly all fluorine containing chemicals that are made from HF or HF products.

ED_002700_00005500-00284

EXHIBIT VIII-I
U.S. Producers of Fluorocarbons

Company	Plant Site	Annual Capacity (Millions of Pounds)	Type of Fluorocarbons
Allied-Signal Inc. Engineered Materials Sector	Baton Rouge, LA Danville, IL El Segundo, CA	315	Trichlorofluoromethane (CFC-11) Dichlorodifluoromethane (CFC-12) Chlorodifluoromethane (CFC-22) Trichlorotrifluoroethane (CFC-113) Dichlorotetrafluoroethane (CFC-114)
Atochem North America, Inc. Fluorine Chemicals Division	Calvert City, KY Wichita, KS	240	Trichorofluoromethane (CFC-11) Dichlorodifluoromethane (CFC-12) Chlorodifluoromethane (CFC-22) Dichlorofluoroethane (HCFC-1416) Dichlorodifluoroethane (HCFC-1426)
Ausimont USA, Inc.	Thorofare, NJ	25	Dichlorofluoroethane (HCFC-1416) Dichlorodifluoroethane (HCFC-1426)
Du Pont Chemicals Fluorochemicals	Antioch, CA Corpus Christi, TX Louisville, KY Montague, MI Deepwater, NJ	700	Trichlorofluoromethane (CFC-11) Dichlorodifluoromethane (CFC-12) Chlorodifluoromethane (HCFC-22) Chlorotrifluoromethane (CFC-23) Trichlorotrifluoroethane (CFC-113) Dichlorotetrafluoroethane (CFC-114) Chloropentafluoroethane (CFC-115) Hexafluoroethane (HFC-116) Tetrafluoroethane (HFC-134a) Difluoroethane (HFC-152a)
Halocarbon Products Corporation	North Augusta, SC	N.A.	Dichlorotrifluoroethane (HCFC-123) Tetrafluoroethane (HFC-134a)
La Roche Chemicals, Inc.	Gramercy, LA	80	Trichlorofluoromethane (CFC-11) Dichlorodifluoromethane (CFC-12) Chlorodifluoromethane (CFC-22)
	Total	1,360	

Note: Capacities are SRI estimates. The types of fluorocarbons listed exclude halons, azeotropes, and any products produced in pilot plants only.

Source: SRI International, *1991 Directory of Chemical Producers,* United States.
Seringer, Carolyn S., Du Pont Chemicals, comments from technical review of *Hydrogen Fluoride Study Report to Congress,* Draft May 8, 1992, June 5, 1992. (436.4)

ED_002700_00005500-00285

EXHIBIT VIII-2
Other Chemicals Manufactured Using HF or Based on Another HF Product
(Examples Only - Not a Complete List)

Chemical	Use	Company	Plant Site
Bromochlorodifluoromethane (Halon 1211) (Produced by bromination of fluorocarbon)	Fire extinguishers	Great Lakes Chemical Corp.	El Dorado, AK
Bromotrifluoromethane (Halon 1301) (Produced by bromination of fluorocarbon)	Fire extinguishers	Great Lakes Chemical Corp.	El Dorado, AK
Fluoboric acid (Produced using 79% HF solution)	Manufacture of fluoborate salts used in metal processing and as catalysts	Atochem North America Chemical Specialties Div.	Tulsa, OK
		Chemtech Industries, Inc. Fluoride Manufacturing Div. Harstan Div.	St. Louis, MO
		Englehard Corp. Catalysts and Chemicals Div.	Cleveland, OH
		Fidelity Chemical Products Corp.	Newark, NJ
		Johnson Matthey, Inc. Alfa Products	Danvers, MA
		New Hampshire Oak General Chemical Corp.	Claymont, DE
		Philipp Brothers Chemicals C.P. Chemicals, Inc., sub.	Sewaren, NJ
Fluosulfonic acid	Preparation of boron trifluoride, catalyst	DuPont Co. DuPont Chemicals	La Porte, TX
		New Hampshire Oak General Chemical Corp.	Claymont, DE
		Sigma-Aldrich Corp. Aldrich Chemical Co., sub.	Milwaukee, WI
Vinyl Fluoride	Monomer for plastics	DuPont Co. Fluorochemicals	Louisville, KY

Sources: SRI International, *1991 Directory of Chemical Producers, United States of America, 1991.*
Kirk-Othmer Encyclopedia of Chemical Technology, Volumes 10 and 11, 1980.
Seringer, Carolyn S., Du Pont Chemicals, comments from technical review of *Hydrogen Fluoride Study Report* to *Congress,* Draft May 8, 1992 June 5, 1992 (486.4).

ED_002700_00005500-00286

APPENDIX IX
U.S. AND CANADIAN PETROLEUM REFINERIES WITH HYDROGEN FLUORIDE ALKYLATION UNITS

Exhibit IX-1 of this appendix presents U.S. petroleum refineries that use HF as an alkylation catalyst. The exhibit shows the name and location of the refinery and also indicates whether the Phillips or UOP process is used. Canadian refineries with HF alkylation units are also listed.

ED_002700_00005500-00287

EXHIBIT IX-1
Petroleum Refineries with HF Alkylation Units

I. U.S. Refineries

Petroleum Refiners	Plant Site	Process
Amoco Oil Co.	Texas City, TX	Phillips
Amoco Oil Co.	Mandan, N D	Phillips
Ashland Petroleum	Catlettsburg, KY	UOP
Ashland Petroleum	Canton, OH	UOP
Ashland Petroleum	St. Paul Park, MN	UOP
BP Oil, Inc.	Marcus Hook, PA	UOP
BP Oil, Inc.	Belle Chase, LA	Phillips
BP Oil, Inc.	Ferndale, WA	Phillips
Cenex Refinery	Laurel, MT	UOP
Champlin Refining	Corpus Christi, TX	UOP
Chevron, USA	Salt Lake City, UT	UOP
Chevron, USA	Philadelphia, PA	Phillips
Chevron, USA	Port Arthur, TX	Phillips
Clark Oil & Refinery Corp.	Blue Island, IL	UOP
Clark Oil & Refinery Corp.	Hartford, IL	UOP
Coastal Refinery & Marketing	El Dorado, KS	Phillips
Coastal Refinery & Marketing	Wichita, KS	UOP
Coastal Refining & Marketing	Corpus Christi, TX	UOP
Conoco	Ponca City, OK	Phillips
Conoco	Billings, MT	Phillips
Crown Central Petroleum	Houston, TX	Phillips
Diamond Shamrock	Three Rivers, TX	UOP
Exxon Company USA	Billings, MT	UOP
Farmland Industries	Coffeyville, KS	UOP
Fina Oil and Chemical	Big Spring, TX	UOP
Flying J Petroleum Co.	North Salt Lake City, UT	Phillips
Frontier Oil and Refining	Cheyenne, WY	UOP
Giant Refining Company	Gallup, NM	UOP
Golden West Refining	Santa Fe Springs, CA	UOP
Hill Petroleum	Texas City, TX	Phillips
Indiana Farm Bureau Coop.	Mt. Vernon, IN	UOP
Kerr-McGee Refining Corp.	Wynnewood, OK	Phillips
Koch Refining	Corpus Christi, TX	UOP
MAPCO Petroleum	Memphis, TN	UOP
Marathon Petroleum	Robinson, IL	UOP
Marathon Petroleum	Indianapolis, IN	UOP
Marathon Petroleum	Texas City, TX	Phillips

ED_002700_00005500-00288

EXHIBIT IX-1 (Continued)
Petroleum Refineries with HF Alkylation Units

I. U.S. Refineries

Petroleum Refiners	Plant Site	Process
Marathon Petroleum	Garyville, LA	Phillips
Mobil Oil	Chalmette, LA	Phillips
Mobil Oil	Joliet, IL	Phillips
Mobil Oil	Paulsboro, NJ	Phillips
Mobil Oil	Torrance, CA	UOP
Murphy Oil U.S.A.	Superior, WI	UOP
Murphy Oil U.S.A.	Meraux, LA	UOP
National Cooperative Refiners Assoc.	McPherson, KS	UOP
Navajo Refining	Artesia, NM	UOP
Phillips 66 Company	Borger, TX	Phillips
Phillips 66 Company	Sweeny, TX	Phillips
Phillips 66 Company	Woods Cross, UT	Phillips
Placid Refining	Port Allen, LA	UOP
Powerine Oil	Santa Fe Springs, CA	UOP
Shell Oil	Odessa, TX	Phillips
Southwestern Refining Corp.	Corpus Christi, TX	UOP
Sun Refining Co.	Tulsa, OK	UOP
Texaco Marketing & Refining	El Dorado, KS	Phillips
Total Petroleum	Ardmore, OK	UOP
Total Petroleum	Arkansas City, KS	UOP
Total Petroleum	Alma, MI	UOP
Ultramar, USA Inc.	Wilmington, CA	UOP
Uno-Ven Corp.	Lemont, IL	Phillips
Valero Refining Co	Corpus Christi, TX	Phillips
Wyoming Refining Co.	New Castle, WY	Phillips

II. Canadian Refineries

Petroleum Refiners	Plant Site	Process
Esso Petroleum Canada	Sarnia, Ontario	UOP
Esso Petroleum Canada	Edmonton, Alberta	UOP
Petro-Canada Products	Edmonton, Alberta	UOP
Petro-Canada Products	Taylor, British Columbia	Phillips
Shell of Canada	Montreal, Quebec	UOP
Sunoco Inc.	Sarnia, Ontario	Phillips

Source: American Petroleum Institute, Submission to EPA, April 22, 1991.

ED_002700_00005500-00289

This page intentionally left blank.

ED_002700_00005500-00290

APPENDIX X
RULE 1410: SCAQMD REGULATION ON HYDROGEN FLUORIDE STORAGE AND USE

Introduction

The South Coast Air Quality Management District (SCAQMD) adopted Rule 1410 on April 5, 1991. It represents the only direct regulation of HF in the United States. The three major sections in Rule 1410: Phase Out; Interim Control Measures; and Reporting and Storage/Usage Inventory Requirements are discussed below.

Phase Out

In accordance with the HF phase out schedule, refineries must cease use of HF on or before January 1, 1996 and fluorocarbon production facilities on or before January 1, 1999 unless the HF is contained in a mixture which in a serious, near worst-case accidental release, will not result in atmospheric concentrations equal to or greater than 20 parts per million (ppm) for five minutes and 120 ppm for one minute at or beyond the facility boundary. These concentrations were based on the SCAQMD analysis and study of irritation thresholds for HF and based on extrapolation from existing toxicity standards (i.e., IDLH, OSHA).

The SCAQMD conducted studies before determining that anhydrous HF should be phased out. These studies are described in the March 19, 1991 "Supporting Document for the Proposed Rule 1410." Based on a computer model and scenarios chosen by the SCAQMD, a release of anhydrous HF was deemed to pose unacceptable risk to the public. However, for facilities using HF contained in a mixture, SCAQMD allows the facility to conduct a computer modeling run to determine if a near worst-case accidental release will result in atmospheric concentrations below the exemption cutoffs mentioned above. Facilities have to take a certain approach approved by the SCAQMD for their modeling. Facilities must use the Dense Gas Dispersion (DEGADIS) computer model used by SCAQMD or another approved model for calculating concentration and exposure, with SCAQMD-determined input parameters for surface roughness, worst-case meteorological conditions, reference height for wind speed, relative humidity, and ambient temperature. In addition, the SCAQMD defines the near worst-case scenario as a release from a two inch diameter pipe failure which was based on actual failure rate data, and SCAQMD's judgment of the worst-case release in view of the Marathon event. The facility itself is responsible for running the models and for choosing model source terms such as release rate and rate duration. These source terms must be approved by the SCAQMD.

Interim Controls

In order for a facility that is subject to the phase out to continue to use HF until the 1996 deadline takes effect, the facility must install safety equipment and implement procedures required by the SCAQMD to reduce the risk of HF. On or after January 1, 1992, facilities must:

- Maintain a facility-specific minimum HF inventory (the maximum amount allowed on site);
- Maintain HF-sensitive paint for leak detection on all valves and flanges for pipes and vessels handling HF;

ED_002700_00005500-00291

- Maintain emergency isolation valves operated by remote switches in the control room or in appropriately safe locations which are accessible during HF releases;

- Operate and maintain automatic HF detection and alarm systems in all HF areas and use an approved on-site remote terminal unit (RTU) that is linked to the SCAQMD and capable of linkage with the local city and county fire departments:

- Maintain safety devices and procedures to neutralize accidental releases;

- Maintain control room detectable audible and visual alarm systems to eyewashes and safety showers in all areas where HF is present;

- Maintain direct supervision of all maintenance and technical support personnel and laborers when they work within the HF unit boundaries or on equipment directly related to the operation of the HF unit and at such times maintain individuals trained in HF safety, that have authority to act, at or about the HF unit;

- Administer job-specific safety training for all maintenance and technical support personnel and require that contractors do the same and provide written and walk through performance examinations and maintain records of such training; and,

- Ensure that all HF loading and unloading operations are administered within the presence of a facility-trained operator.

After January 1, 1993, the owner or operator of each facility must:

- Maintain containment systems;

- Maintain facility-specific automated evacuation systems (i.e., rapid vessel de-inventory);

- Maintain facility-specific automated water spray systems, or an SCAQMD-approved alternative, designed to achieve an HF removal efficiency of 90 percent or equivalent in the HF areas; and

- Ensure facility-specific seismic upgrade of support structures for all HF-related process equipment as specified in the 1988 Uniform Building Code Section 2312.

Facilities must also develop a plan each year describing the specific steps it will take to comply with specific risk reduction measures and submit the plan to the SCAQMD. In addition, by January 1, 1995, the owner or operator of any facility must submit a compliance plan to the SCAQMD.

Reporting and Storage/Usage Inventory Requirements

After July 1, 1991, an owner or operator must report to the SCAQMD any HF release that results in exposed persons requiring medical treatment at an off-site facility, evacuation of any portion of the facility premises, or aerosol HF transport beyond the facility property boundaries. Such a report must be made within one hour of the time the release is known, or reasonably should have been known to any employer, officer, or agent of the owner or operator. The report must include:

- The name and specific location of the facility;

- Identification and title of the notifier:

ED_002700_00005500-00292

- Cause and extent of the release, including approximate amount, concentration, and the area affected:
- Specific location of the release and equipment involved in the release;
- Any and all measures taken to mitigate or stop the release, including repairs;
- A complete description, to the extent known, and number of any injuries or fatalities; and
- Names of other agencies notified of the release, the time of notification, and the name of the person notified.

In addition, the owner or operator must submit a follow-up written report with all the information presented at the time of the initial notification and any other related information. After January 1, 1992, the owner or operator of an HF facility must upon the alarm of a HF sensor at the facility, notify the SCAQMD within fifteen minutes of the alarm and provide the same information outlined above.

By July 1, 1992, and July 1 of each subsequent year, all facilities must also submit HF storage and usage reports describing the quantities stored and used during the previous calendar year. Such an inventory shall include:

- The name of the company, telephone and address and company identification and applicable equipment permit numbers, as administered by the SCAQMD;
- The name and title of the person conducting the inventory;
- The name and address of the manufacturer or distributor of the HF;
- A brief description of the process and/or equipment using HF;
- The total annual quantity of HF received in gallons, the size and frequency of deliveries, and the mode of transport;
- The concentration of HF for each piece of process equipment and as received and in storage:
- The total quantity of HF used annually per specified process in gallons; and
- A description of the type of storage and the maximum and average quantities at any one time, of HF in possession or control of the owner or operator of the facility in fixed or mobile storage containers both on-site and at other locations within the SCAQMD.

Rule 1410 also provides for three exemptions from this reporting requirement. It exempts facilities that do not store, transport or use anhydrous HF and facilities that store, transport, or use aqueous HF exclusively in solutions in concentrations less than or equal to 50 percent by weight. It also exempts any facility that stores, transports, or uses less than or equal to one gallon of anhydrous HF at any one time.'

ED_002700_00005500-00293

ENDNOTES

1. Hydrogen Fluoride Storage and Use, Rule 1410, South Coast Management District, CA, April 5, 1991. (250)

ED_002700_00005500-00294

APPENDIX XI
CONTAINERS FOR TRANSPORTATION OF HYDROGEN FLUORIDE

The transportation of HF is regulated by the DOT under the Hazardous Materials Transportation Act (HMTA) and the associated Hazardous Materials Regulations (HMR).[1,2] The containers and specifications for transport of HF are determined for anhydrous HF, aqueous HF with concentration greater than **60%,** and aqueous HF with concentration less than 60%. The specifications for these strengths of HF are outlined in Exhibit XI-1.

Rail Tank Cars

According to DOT regulations, anhydrous HF must be shipped in DOT specified rail tanks (specification numbers 105, 112, or 114) with test pressures of 300 psi or greater. The commonly used 105A300W model rail tanks have a capacity range of approximately 4,000 to 16,000 gallons. Exhibit XI-2 shows a typical class 105A300W car. The other classes used for anhydrous hydrogen fluoride are similar in appearance and design, Specifications associated with three tank cars of the class 105A300W are given in Exhibit XI-3.[3]

For anhydrous HF, the only opening permitted in the railway tanks is a single **manway** located in the center at the top. Five valves are mounted inside the dome cover, four are angle valves used for the connections to pump HF and the fifth is the safety relief valve used to release HF gas in the event of tank overpressurization.[4]

Aqueous HF may be shipped in DOT rail tank models 103, 104,105, 109, 111, 112, 114, or 115. Tank cars of class 112S400W, as an example, generally have capacities of 4,500 gallons to 8,000 gallons, although larger capacities are possible. Several **railway** tank cars that may be used in the transportation of hydrofluoric acid are described in **Exhibit** XI-4.[5]

As a standard for industry, the safety relief valve is of the spring-loaded type and is usually combined with a frangible (or bursting) disc. Frangible disks are used because the continuous corrosive action of HF on the relief valve may cause the relief valve to fail. Railway tankers may be rubber-lined for solutions of up to 40 percent aqueous hydrofluoric acid.[6]

Motor Vehicle Tank Cars

According to DOT regulations, both anhydrous and aqueous HF transported via motor vehicle must be transported in tank trucks of specification MC304, MC307, MC331, MC310, MC311, MC312, DOT 407, and DOT 412. (See **Exhibit** XI-5.)

Aqueous hydrofluoric acid is shipped by tank motor vehicles with steel tanks with capacities up to 4200 gal. Similar to railway cars, these highway tankers are unloaded from the **top.**[7]

Cylinders

Cylinders holding about 400 pounds may be used to transport small volumes of anhydrous hydrofluoric acid. DOT specification cylinders 3, 3A, 3AAA, 3B, 3C, 3E, 4, 4A, 25, or 38 may be used. Specifications 4B, 4BA, 4BW, or 4C cylinders may be used if they are not brazed. **Exhibit** XI-6 describes the 4B and 4BA cylinders. Laboratories are the primary users or these types of small cylinders. Cylinders may also be used to transport aqueous hydrofluoric acid.

EXHIBIT XI-1
Department of Transportation Regulations for the Transportation of HF

	Cargo tanks	Rail cars	Vessel storage	Non-bulk Packaging Containers				Aircraft/Railroad transportation maximum
				General	Combination		Single	
					Outer	Inner		
Anhydrous HF	Specification MC 304, MC307, MC331 cargo tank motor vehicles; and MC310, MC 311, MC 312, DOT 407, and DOT 412 cargo tank motor vehicles with tank design pressure of at least 172.4 kPa (25 psi) are authorized.	Tank cars must be marked with the name of the cargo. The only tank cars authorized are class DOT 105, 112, and 114 tank car tanks with a test pressure of 2069 kPa (300 psi) or greater. Each tank must have a minimum shell thickness of 10 mm (.394 inch) with mild steel with at least 5.0 mm (.197 inch) lead lining. Riveted tank car tanks are not authorized.	Must be stowed "on deck" on a cargo vessel, but is prohibited on a passenger vessel. Must be stored "clear of living quarters" and "separated from" foodstuffs.	Cylinders: Specification 3, 3A, 3AA, 3B, 3C, 3E, 4, 4A, 25, or 38 cylinders; or Specification 4B, 4BA, 4BW, or 4C cylinders, if they are not brazed. Filling density must not exceed 85 percent of the water weight capacity of the cylinder. Cylinders used exclusively in this service may, in lieu of a periodic hydrostatic retest, be given a complete external visual inspection. Such inspections shall be made on cylinders cleaned to bare metal.	N/A	N/A	N/A	Forbidden
Greater than 60% strength (aqueous HF)	Specification M306 and DOT 406 cargo tanks, and DOT 57 portable tanks are not authorized. Specification MC 304, MC307, MC331 cargo tank motor vehicles; and MC310, MC 311, MC 312, DOT 407, and DOT 412 cargo tank motor vehicles with tank design pressure of at least 172.4 kPa (25 psi) are authorized.	Class DOT 103, 104, 105, 109, 111, 112, 114, or 115 tank car tanks; and Class 106 or 110 multi unit tank car tanks are authorized. Riveted tank car tanks and AAR206 tank car tanks are prohibited. Tank cars must be marked with the name of the cargo. Tanks must be made of steel that is rubber lined or unlined. Unlined tanks must be passivated before being placed in service. If unlined tanks are washed out with water, they must be repassivated prior to return to service. Cargo in unlined tanks must be inhibited so that the corrosive effect on steel is not greater than that of hydrofluoric acid of 65 percent concentration. Each tank shall have a minimum shell thickness of 8.0 mm (.315 inch) mild steel Gauging devices are required on Class DOT 103, 104, and 111 tank car tanks.	Must be stowed "on deck" on a cargo vessel, but is prohibited on a passenger vessel. Stow "clear of living quarters" and "separated from" foodstuffs. Keep as cool as reasonably practicable. Stow "away from" sources or heat.	Steel packagings must be corrosion-resistant or have protection against corrosion. Packagings must be protected with non-metallic linings impervious to the cargo or have a suitable corrosion allowance. Glass materials of construction are not authorized for any part of a packaging which is normally in contact with the hazardous material. Aluminum construction materials are not authorized for any part of a packaging which is normally in contact with the hazardous material.	For combination packagings, if plastic inner packagings are used, they must be packed in tightly closed metal receptacles before packing in outer packagings. Steel drum: 1A1 or 1A2 Aluminum drum: 1B1 or 1B2 Metal drum other than steel or aluminum: 1N1 or 1N2 Plywood drum: 1D Fiber drum: 1G Plastic drum: 1H1 or 1H2 Steel jerrican: 3A1 or 3A2 Plastic jerrican: 3H1 or 3H2 Steel box: 4A1 or 4A2 Aluminum box: 4B1 or 4B2 Natural wood box: 4C1 or 4C2 Plywood box: 4D Reconstituted wood box: 4F Fiberboard box: 4G Expanded plastic box: 4H1 Solid plastic box: 4H2	Glass or earthenware receptacles Plastic receptacles Metal receptacles Glass ampoules	Except for transportation by passenger aircraft, the following single packagings are authorized: Steel drum: 1A1 or 1A2 Aluminum drum: 1B1 or 1B2 Metal drum other than steel or aluminum: 1N1 or 1N2 Plastic drum: 1H1 or 1H2 Steel jerrican: 3A1 or 3A2 Plastic jerrican: 3H1 or 3H2 Plastic receptacle in steel, aluminum, fiber or plastic drum: 6HA1, 6HB1, 6HG1, 6HH Plastic receptacle in steel, aluminum, wooden, plywood or fiberboard box: 6HA2, 6HB2, 6HC, 6HD2, or 6HG2. Glass, porcelain or stoneware in steel aluminum or fiber drum: 6PA1, 6PB1, or 6PG1. Glass, porcelain or stoneware in steel, aluminum or fiberboard box: 6PA2, 6PB2, 6PC or 6PG2 Glass, porcelain or stoneware in solid or expanded plastic packaging: 6PH1 or 6PH2. Cylinders, specification, as prescribed for any compressed gas, except for Specifications 8 and 3HT.	For transportation in one package by passenger-carrying aircraft or passenger-carrying rail car: 0.5 L For transportation by cargo aircraft: 2.5 L.

ED_002700_00005500-00296

EXHIBIT XI-1

Department of Transportation Regulations for the Transportation of HF

	Cargo tanks	Rail cars	Vessel storage	Non-bulk Packaging Containers				Aircraft/Railroad transportation maximum
				General	Combination		Single	
					Outer	Inner		
Less than 80 % strength (aqueous HF)	Specification MC 304, MC307, MC331 cargo tank motor vehicles; and MC310, MC 311, MC 312, DOT 407, and DOT 412 cargo tank motor vehicles with tank design pressure of at least 172.4 kPa (25 psi) are authorized.	Tank cars must be marked with the name of the cargo. Each tank shall have a minimum shell thickness of 8.0 mm (.315 inch) mild steel Class DOT 103, 104, 105, 109, 111, 112, 114, or 115 tank car tanks; and Class 106 or 110 multi unit tank car tanks are authorized. Gauging devices are required on Class DOT 103, 104, and 111 tank car tanks. Riveted tank car tanks are not authorized.	Material must be stowed "on deck" on a cargo vessel, but is prohibited on a passenger vessel. Stow "clear of living quarters" and "separated from" foodstuffs. Keep as cool as reasonably practicable. Stow "away from" sources or heat.	Packagings must be protected with non-metallic linings impervious to the cargo or have a suitable corrosion allowance. Steel packagings must be corrosion-resistant or have protection against corrosion. Glass materials of construction are not authorized for any part of a packaging which is normally in contact with the hazardous material. Aluminum construction materials are not authorized for any part of a packaging which is normally in contact with the hazardous material.	For combination packagings, if plastic inner packagings are used, they must be packed in tightly closed metal receptacles before packing in outer packagings. Steel drum: 1A1 or 1A2 Aluminum drum: 1B1 or 1B2 Metal drum other than steel or aluminum: 1N1 or 1N2 Plywood drum: 1D Fiber drum: 1G Plastic drum: 1H1 or 1H2 Wooden barrel: 2C2 Steel jerrican: 3A1 or 3A2 Plastic jerrican: 3H1 or 3H2 Steel box: 4A1 or 4A2 Aluminum box: 4B1 or 4B2 Natural wood box: 4C1 or 4C2 Plywood box: 4D Reconstituted wood box: 4F Fiberboard box: 4G Expanded plastic box: 4H1 Solid plastic box: 4H2	Glass or earthenware receptacles Plastic receptacles Metal receptacles Glass ampoules	Except for transportation by passenger aircraft, the following single packagings are authorized: Steel drum: 1A1 or 1A2 Aluminum drum: 1B1 or 1B2 Metal drum other than steel or aluminum: 1N1 or 1N2 Plastic drum: 1H1 or 1H2 Wooden barrel: 2C1 Steel jerrican: 3A1 or 3A2 Plastic jerrican: 3H1 or 3H2 Plastic receptacle in steel, aluminum, fiber or plastic drum 6HA1, 6HB1, 6HG1, 6HH. Plastic receptacle in steel, aluminum, wooden, plywood or fiberboard box : 6HA2, 6HB2. 6HC, 6HD2, or 6HG2. Glass, porcelain or stoneware in steel aluminum or fiber drum: 6PA1, 6PB1, or 6PG1. Glass, porcelain or stoneware in steel, aluminum or fiberboard box 6PA2, 6PB2, 6PC or 6PG2. Glass, porcelain or stoneware in solid or expanded plastic packaging: 6PH1 or 6PH2. Plastic receptacle in plywood drum: 6HD1	For transportation in one package by passenger-carrying aircraft or passenger-carrying rail car: 1 L For transportation by cargo aircraft: 30 L

ED_002700_00005500-00297

EXHIBIT XI-2

Typical Class 105A300W Tank Car

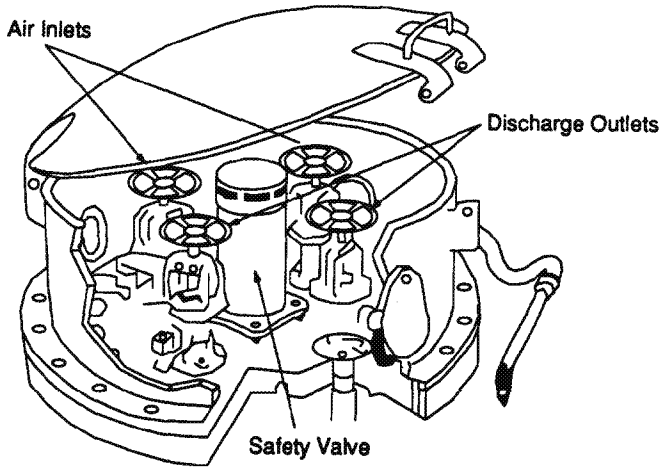

Detail of top unloading arrangement

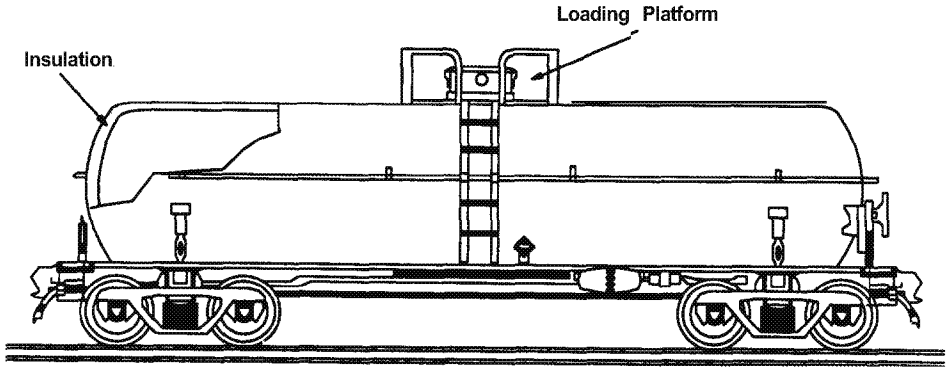

Illustration of tank car layout

124078-4

ED_002700_00005500-00298

EXHIBIT XI-3

Typical Railway Tank Car Specifications - Class 105A300W

Description	Tank Car Size (Imp. gal.)		
	9,000	21,000	28,000
Overall			
Nominal Capacity	9000 gal.	21,000 gal	28,000 gal
Car weight - empty	66,800 lb.	90,000 lb.	112,000 lb.
Car weight - max.	177,000 lb.	184000 lb.	263000 lb.
Tank			
Material	Steel	Steel	Steel
Thickness	11/16 in.	11/16 in.	11/16 in.
Inside Diameter	88 in.	95 in.	120 in.
Test Pressure	300 psi.	300 psi.	300 psi.
Burst Pressure	750 psi.	750 psi.	750 psi.

Source: Environment Canada Environmental Protection Service, *Hydrogen Fluoride and Hydrofluoric Acid, Environmental and Technical Information for Problem Spills,* Technical Services Branch, Ottawa, Ontario, July 1984. (220)

EXHIBIT XI-4

Railway Tank Car Specifications

DOT Specification Number	Description
103AW	Steel tank with dome. Insulation optional. Safety valve set at 2070 kPa (300 psi). Bottom outlet and washout prohibited. Test pressure:
105A100W	Steel tank with dome. Insulation required. Safety valve set at 517 kPa (75 psi). Bottom outlet and washout prohibited. Test pressure: 100 psi.
105A300W	Steel tank with dome. Insulation required. Safety valve set at 1550 kPa (225 psi). Bottom outlet and washout prohibited. Test pressure: 300 psi.
111A100W2	Steel tank without dome. Insulation optional. Safety valve set at 517 kPa (75 psi). Test pressure: 100 psi.
111A100W4	Steel tank without dome. Insulation required. Safety valve set at 517 kPa (75 psi). Bottom outlet and washout prohibited. Test pressure: 100 psi.
111A100W5	Rubber-lined steel tank without dome. Insulation optional. Safety vent, burst at 413 kPa (60 psi). Bottom outlet and washout prohibited. Test pressure: 100 psi.
112A400W	Steel tank with dome. Insulation not used. Safety valve set at 2070 kPa (300 psi). Bottom outlet and washout prohibited. Test pressure: 400 psi.
112S400W	Special permit tank car. Same as 112A4OOW, except no insulation used and equipped with head shield. Test pressure: 400 psi.
114A400W	Steel tank with dome. Insulation not used. Safety valve set at 2070 kPa (300 psi). Bottom outlet and washout optional. Test pressure 400 psi.

Source: Environment Canada Environmental Protection Service, *Hydrogen Fluoride and Hydrofluoric Acid, Environmental and Technical Information for Problem Spills,* Technical Services Branch, Ottawa, Ontario, July 1984. (220)

ED_002700_00005500-00300

EXHIBIT XI-5

Motor Vehicle Tank Specifications

DOT Specification Number	Description
MC312	Steel butt-welded tank. Design and construct in accordance with American Society for Mechanical Engineers **(ASME)** Code when unloading by pressure in excess of 103 kPA (15 psi). Gauging device is not required. Top and/or bottom discharge outlet. Minimum one pressure relief device per compartment as required by **ASME** Code. One minimum 15 in. diameter manhole per compartment. Bottom washout optional.

Source: Environment Canada Environmental Protection Service, *Hydrogen Fluoride and Hydrofluoric Acid, Environmental and Technical Information for Problem Spills,* Technical Services Branch, Ottawa, Ontario, July 1984. (220)

EXHIBIT XI-6

Cylinder Specifications

DOT Specification Number	Description
4B	Welded and brazed steel cylinders. Service pressure 1035 to 3450 kPa (150 to 500 psi). Capability must not exceed 1000 lb. water.
4BA	Welded or brazed steel cylinders made of definitely prescribed steels. Service pressure 1550 to 3450 kPa (150 to 500 psi). Capacity must not exceed 1000 lb. water.

Source: Environment Canada Environmental Protection Service, *Hydrogen Fluoride and Hydrofluoric Acid, Environmental and Technical Information for Problem Spills,* Technical Services Branch, Ottawa, Ontario, July 1984. (220)

ED_002700_00005500-00301

Polyethylene carboys

Reagent grade hydrofluoric acid (49%) is often supplied in polyethylene bottles. These **carboys** can generally hold 30 or 55 **gal.**[8] Polyethylene containers (specification 2SL) with a steel overpack (Specification 6D) are frequently employed. The container has a 260 lb. capacity and is designed for one-way service, but is returned for disposal[9].

ED_002700_00005500-00302

ENDNOTES

1. "Performance-Oriented Packaging Standards; Changes to Classification, Hazard Communication, Packaging and Handling Requirements Based on U.N. Standards and Agency Initiative, Final Rule,' 49 CFR *Part 107, et. a/.,* Department of Transportation Research and Special Programs Administration. (139.9)

2. "Hazardous Materials Regulations,' 49 CFR 171-180. (156.5)

3. Environment Canada Environmental Protection Service, Hydrogen *Fluoride and Hydrofluoric* Acid, *Environmental and Technical* **Information** *for Problem Spills,* Technical Services Branch, Ottawa, Ontario, July 1984. (220)

4. Environment Canada Environmental Protection Service.

5. Environment Canada Environmental Protection Service.

6. Chemical Industries Association, *Guide* **to** *Safe Practice in the Use and Handling of Hydrogen Fluoride,* London, England, 1988. (147)

7. Environment Canada Environmental Protection Service.

8. Mark, Herman F., Donald F. Othmer, Charles G. Overberger, and Glenn T. **Seaborg,** eds., *Kirk-Othmer Encyclopedia of Chemical Technology,* Third Edition, Volume 10, John Wiley and Sons, New York, 1978. (285)

9. Environment Canada Environmental Protection Service.

This page intentionally left blank.

ED_002700_00005500-00304

APPENDIX XII
DATA BASE SOURCES FOR ACCIDENT INFORMATION

ARIP Database

The Accidental Release Information Program **(ARIP)** database, maintained by EPA, contains about 2,200 records of chemical accidental release events that have occurred since October, 1986. The purpose of the **ARIP** database is to collect more detailed information on the causes of accidents, the prevention efforts already in use at the facility to prevent chemical accidents, and the changes to prevent a reoccurrence. **ARIP** was started because no other database in operation contains such information.

Facilities are required under CERCLA to report releases of CERCLA hazardous substances when such releases exceed a reportable quantity (RQ). These releases are reported to the National Response Center (NRC) and shared with EPA's Emergency Release Notification System (ERNS; see below). EPA periodically screens the ERNS database to find events that meet one or more of these triggers:

- The quantity released was above a certain multiple of the RQ;
- The release resulted in a death or injury;
- The release was one in a trend of frequent releases from the same facility; or
- The release involved an extremely hazardous substance (EHS) as listed by EPA under section 302 or SARA/EPCRA.

EPA then sends a detailed questionnaire to the facility that reported the release event that meets these criteria. When the questionnaire is returned, the data is encoded into the database.

In addition to routine information such as the chemical released, the amount lost, the media affected (air, water, etc.) and consequences of the release (deaths, injuries, evacuations), **ARIP** captures unique details such as the duration of the release, circumstances leading up to the release, whether a hazard evaluation has been conducted for the process where the release occurred and changes instituted or planned to prevent the release from reoccurring. Note however, that **ARIP** is not statistically representative of all industry. **ARIP** is designed to capture events involving CERCLA or extremely hazardous substances with more severe consequences. It does not contain events associated with flammable or petroleum products.

AHE Database

The Acute Hazardous Events **(AHE)** database was developed by EPA to provide an historical perspective on the magnitude of chemical accidents in the United States following the Bhopal, India disaster. The database contains about 6,200 records that represents information on roughly 11,000 incidents that occurred between 1982 and 1986. Data on the events was collected from a variety of sources including the United Press International **(UPI),** Associated Press (AP), 26 daily newspapers, EPA Region VII office files, six offices of five state governments and from spill reports to the National Response Center (NRC, see below). The data collection was only intended to provide a "snapshot" of the number of chemical accidents occurring at fixed facilities versus transportation, fire and explosion events versus toxic releases, and the degree of deaths, injuries, evacuations and environmental damage associated with these kinds of incidents in the United States. The data has not been thoroughly verified and caution should be used when interpreting certain findings.

ED_002700_00005500-00305

ERNS

The Emergency Response Notification System (ERNS) is maintained by EPA from data reported to the National Response Center (NRC); the US. Coast Guard, or directly to EPA regional offices. A facility is required by law to report releases of more than a reportable quantity (RQ) of a CERCLA hazardous substance to the NRC, the Coast Guard or to EPA regional offices. Reports to the NRC are used primarily to determine if a federal response team is needed to assist with the response to the incident. EPA then compiles the data into ERNS and shares it with EPA Regional Offices. Much of the data in ERNS is very early information during the **life** of an emergency and data is often changed later when more accurate details are available and the system often contains duplicate records. EPA is continually updating information to delete duplicates and verify reported data.

HMIS

The Hazardous Materials Information System (HMIS) is a database containing information on chemical releases from transportation incidents. Information includes carrier name, shipper name, mode of transport, release due to vehicular accident or derailment, number of containers shipped, reason(s) for failure of containers, amount of material released, and consequences such as the number of deaths or injuries and the number of individuals evacuated. HMIS identifies transportation incidents involving HF and can indicate those deaths and injuries directly attributed to the HF release and those attributed to the physical impact of the accident (e.g. collision).

ED_002700_00005500-00306

APPENDIX XIII
DESCRIPTIONS OF HYDROGEN FLUORIDE ACCIDENTS

This appendix presents general descriptions of hydrogen fluoride accidents from the **ARIP**, **AHE,** ERNS, and HMIS databases and other sources.

ED_002700_00005500-00307

EXHIBIT XIII-1
General Description of Hydrogen Fluoride **Accidents** From the **ARIP** Database

DATE	FACILITY (TYPE)'	STATE	QUANTITY RELEASED	MEDIA AFFECTED	CONCENTRATION***	RELEASE EVENT	MIGRATION OFF SITE	CAUSE/DESCRIPTION
10-31-86	Exxon, Billings Refinery (R)	MT	2,000 lbs	1,000 lbs to air, 1,000 lbs to sw	anhydrous	vapor release	750 lbs to air	piping failure in alkylation unit due to equipment failure
12-19-86	ARMCO, Inc. (SS)	PA	1,590 lbs	sw	70% aqueous	spill	1,590 lbs to sw	failure of welded fitting due to corrosion in concrete containment area
2-26-87	J&L Specialty Products (SS)	PA	9,450 lbs	9,282 lbs to air, 168 lbs to sw	70% aqueous	NPDES excursion	168 lbs to sw	equipment failure in storage vessel
6-1	Mobil Oil, Paulsboro Refinery (R)	NJ	200 lbs	air	40-67% aqueous	vapor release	200 lbs to air	bull plug failure in piping of HF alkylation unit
8-3-87	Ashland Chemical (C)	PA	500 lbs	air	~92% aqueous	vapor release	500 lbs to air	rupture disk on storage tank failed due to unusual stress due to steel vent pipe extension
10-30-87	Marathon Petroleum (R)	TX	63,200 lbs	air, sw, land	anhydrous	vapor release	air, sw, land	crane dropped a convection unit onto an HF storage vessel
10-4-88	J&L Specialty Products (SS)	OH	3,418 lbs	land	70% aqueous	spill	no	faulty piping on process vessel caused leak
1	Phillips 66 Company (R)	UT	1,600 lbs	air, sewer to treatment facility	anhydrous	vapor release	yes	employee opened valve on a line under pressure with HF acid
12-20-88	Philips Display Components (GE)	OH	150 lbs	land	25% aqueous	spill	no	closed valve caused overpressurization in head tank and failure of top gasket
1-9-89	Mobil Joliet Refinery (R)	IL	124 lbs	air	~70 ppm aqueous	vapor release	124 lbs to air	increased water levels doubled rate of acid solubleoilproductionanc increased amount of HF sent to process heater

ED_002700_00005500-00308

EXHIBIT XIII-1 **(continued)**
General Description of Hydrogen Fluoride Accidents From the **ARIP** Database

DATE	FACILITY (TYPE)*	STATE	QUANTITY RELEASED	MEDIA AFFECTED	CONCENTRATION***	RELEASE EVENT	MIGRATION OFF SITE	CAUSE/DESCRIPTION
1-17-89	3M (C)	AL	800 lbs	air, treatment	75% aqueous	vapor release		HF leaked through control valve during repairs
1-29-89	Sikorsky Aircraft (A)	CT	115 lbs	air, land	2-3 oz/gal aqueous	spill	air	pipe fitting in the discharge pump developed a leak and HF was released into secondary containment
6-12-89	Hughes Aircraft (EL)	CA	1 lb	land	70% aqueous	spill	no	bottle of HF fell from a pallet and was broken by a forklift
6-27-89	Great Lakes Chemical (C)	AR	1,320 lbs	air	anhydrous	vapor release	no	pressure gauge on storage vessel failed due to corrosion
7-24-89	Learjet, Inc. (A)	KS	unknown		< 1% aqueous	spill	no	process vessel leaked
8-9-89	Carpenter Technology (SS)	PA	795 lbs	land, air	70% aqueous	spill, vapor release	no	storage tank leaked
8-11-89	General Chemical Corporation (C)	CA	4,000 lbs	sewer to treatment facility	49% aqueous	spill	no	failed containment area, equipment failure, operator error
8-30-89	Kennametal Nevada Refinery (U)	NV	174 lbs	land, air	aqueous	spill	no	flanged joint on acid pipeline between storage tank and process line failed
9-12-89	Columbia Falls Aluminum (AL)	MT	7,700 lbs	air	anhydrous	vapor release	7,700 lbs to air	flow of absorptive alumina for aluminum processing was cut off due to operator error
12-22-89	Allied-Signal (C)	IL	810 lbs	200 lbs sw, 10 lbs to land, 600 lbs to sewer to treatment facility	36% aqueous	spill	200 lbs to sw	extremely cold weather caused freezing of tank vent line and resulted in tank overpressure and tank failure

ED_002700_00005500-00309

EXHIBIT XIII-1 (continued)
General Description of Hydrogen Fluoride Accidents From the ARIP Database

DATE	FACILITY (TYPE)*	STATE	QUANTITY RELEASED	MEDIA AFFECTED	CONCENTRATION***	RELEASE EVENT	MIGRATION OFF SITE	CAUSE/DESCRIPTION
12-23-89	Atochem (CFC)	KY	200 lbs	air	anhydrous	vapor release		sulfuric acid froze, HF kiln vented via seal
4-27-90	BP Oil (R)	PA	333 lbs	150 lbs to air, 183 lbs to sewer to treatment facility	90% aqueous	vapor release		gasket failure on a sight glass assembly
5-26-90	Texas Instruments (EL)	TX	188 lbs	air	49% aqueous	vapor release	188 lbs to air	spill pit indicator failure caused leak
6-26-90	Intel (EL)	CA	800 lbs	land	2% aqueous	spill	no	open valve caused overflow onto floor
7-6-90	Chemical Dynamics (T)**	TX	6,812 lbs	water	aqueous	spill		2" pipe coupling failed, leaked waste etchant mix
7-27-90	Atochem North America, Inc. (C)	NJ	500 lbs	sw	832 mg/l aqueous	spill	500 lbs to sw	open valve caused wastewater to siphon through a pump to the effluent line and discharge into the Delaware river
7-30-90	General Chemical Corporation (C)	CA	300 lbs	land	49% aqueous	spill	no	spill during drum transfer, RCRA sump drain system failed and allowed waste to enter effluent system
8-6-90	Flowline (SS)	PA	852 lbs	water, land	aqueous	spill		leak of spent HF (waste pickle liquor) from storage tank
9-5-90	McDonnell Douglas (A)	CA	15 lbs	air	70% aqueous	vapor release	no	residue in drum left in the sun volatilized causing HF to vent through a bung hole
9-27-90	General Chemical Corporation (C)	CA	350 lbs	land	49% aqueous	spill	no	valves on process vessel failed causing a sewer line leak in the packaging area

ED_002700_00005500-00310

EXHIBIT XIII-1 (continued)
General Description of Hydrogen Fluoride Accidents From the **ARIP** Database

DATE	FACILITY (TYPE)*	STATE	QUANTITY RELEASED	MEDIA AFFECTED	CONCENTRATION***	RELEASE EVENT	MIGRATION OFF SITE	CAUSE/DESCRIPTION
10-8-90	Chevron (R)	UT	225 lbs	air	anhydrous	vapor release		contractor ruptured valve during repairs
11-14-90	Alcoa (AL)	AR	576 lbs	air, vegetation	anhydrous	vapor release		accidental release from production (probably AlF_3)
3-15-91	Roadway Express (T)**	GA	199 lbs	land	aqueous	spill		drum punctured with forklift blade

Source: *ARIP Database*, U.S. Environmental Protection Agency, 1986 to 1991. Data as of January 29, 1992. (45)

* Facility Type
(A) Aircraft manufacture
(AL) Aluminum manufacture
(C) Chemical manufacturing, including the production of HF
(CFC) Chlorofluorocarbon manufacturing
(CL) HF used in cleaning
(EL) Manufacture of electronics, including semi-conductors
(GE) Glass etching, including TV cathode ray tube production
(R) Oil refineries
(SS) Stainless steel manufacture
(T) Transportation, includes loading and unloading, equipment failures during transport, and package failures during transport.
(U) Undetermined

** ARIP designates these incidents as having occurred at a fixed facility, but as the HF was in transit at the time, it has been designated here as (T).
*** Some data on concentration (aqueous or anhydrous) was provided by Allied-Signal.[1]

[1] Letter, *Segregation of Databases for Aqueous and Anhydrous* HF, From: William J. Hague, Allied-Signal, To: Craig Matthiessen, U.S. Environmental Protection Agency, August 18, 1992. (293.3)

ED_002700_00005500-00311

EXHIBIT XIII-2

General Descriptions of Hydrogen Fluoride Accidents From the **AHE** Database

DATE	FACILITY (TYPE)*	STATE	QUANTITY RELEASED	MEDIA AFFECTED	CONCEN-TRATION**	RELEASE EVENT	CAUSE/DESCRIPTION
6-1-80	City Chemical, Co. (C)	NJ	412 lbs	air, land	aqueous	spill	leaking drum
4-12-83	Alchem-tron, Inc. (C)	OH	unknown	air	anhydrous	vapor release	explosion from enclosed vapors in tank
4-29-83	Kerr-McGee Corp. (T)	OK	unknown	air	anhydrous	vapor release	valve failed in truck
9-7-83	Chevron Chemical (R)	UT	unknown	air	anhydrous	vapor release	operator opened flanges on process line before it was cleared
9-9-83	Harshaw Chemical (T)	OH	unknown	air	anhydrous	vapor release	train
10-10-83	New Jersey Warehouse (T)	NJ	unknown	air, water, land	anhydrous	vapor release	
10-17-83	Teff Freight Lines (T)	CA	488 lbs	air, land	anhydrous	spill	leak from truck at freight company
11-10-83	Southern Pacific Railroad (T)	CA	unknown	air	anhydrous	spill	cap off car on train, leaking from manway
6-21-84	Chemical Waste Management (T)	NC	unknown	land	aqueous	spill	tank/truck rubber lining failed
6-25-84	Allied Chemical (C)	LA	unknown	air	anhydrous	vapor release	
8-24-84	Sid Harvey, Co. (U)	MO	unknown	air, water	aqueous	spill	plastic drums leaking
11-10-84	Garrett Truck Lines (T)	CA	188 lbs		anhydrous	spill	truck
2-5-85	Conrail Railroad (T)	IN	unknown	air	anhydrous	vapor release	rail car cracked due to accumulate fatigue
3-3-85	McDonnell Douglas (A)	MO	150 lbs	air, land	70% aqueous	spill	pipeline rupture
3-3-85	unknown (T)	CO	unknown	air	anhydrous	vapor release	worker opened tanker dome on train
5-7-85	Inland Container (T)	MO	413 lbs	on-site	aqueous	spill	forklift punctured drum
5-14-85	unknown (T)	OH	unknown	air	anhydrous	vapor release	venting from valve
6-10-85	Marathon Petroleum (R)	TX	100 lbs	air	anhydrous	vapor release	
7-5-85	SHMAS Contracting (CL)	NJ	unknown	air, land	aqueous	spill	cleaning building with acid compound
8-27-85	unknown (T)	CA	unknown	air	anhydrous	spill	open container inside truck
3-6-86	Chevron Chemical (T)	TX	300 lbs	air	anhydrous	vapor release	relief valve failed on railroad car

ED_002700_00005500-00312

EXHIBIT XIII-2 (continued)
General Description of Hydrogen Fluoride Accidents From the **AHE** Database

DATE	FACILITY (TYPE)*	STATE	QUANTITY RELEASED	MEDIA AFFECTED	CONCEN-TRATION**	RELEASE EVENT	CAUSE/DESCRIPTION
9-12-86	Conway Central Express (T)	MI	412 lbs	air, land	aqueous	spill	plastic drum failed on truck
9-30-86	United Parcel Service (T)	CA	unknown	air, land	aqueous	spill	plastic bottle leaked in truck
10-4-86	Allied/Signal Corp. (C)	LA	2,750 lbs	air	anhydrous	vapor release	power failure led to bypass of scrubber system
10-31-86	Exxon USA (R)	MT	2,000 lbs	air	anhydrous	vapor release	
12-5-86	May Trucking (T)	NV	262 lbs	land	aqueous	spill	barrels leaked in truck accident
10-30-87	Marathon Petroleum (R)	TX	270,000 lbs	air, land	anhydrous	vapor release	falling equipment sheared pipe from tank

Source: *AHE Database*, U.S. Environmental Protection Agency, 1960-1987. Data as of June 5, 1991 (05)

* Facility Type

(A) Aircraft manufacture
(AL) Aluminum manufacture
(C) Chemical manufacturing, including the production of HF
(CFC) Chlorofluorocarbon manufacturing
(CL) HF used in cleaning
(EL) Manufacture of electronics, including semi-conductors
(GE) Glass etching, including TV cathode ray tube production
(R) Oil refineries
(SS) Stainless steel manufacture
(T) Transportation, includes loading and unloading, equipment failures during transport, and package failures during transport.
(U) Undetermined

** Some data on concentration (aqueous or anhydrous) was provided by Allied-Signal.[2]

[2] Letter, *Segregation of Databases for Aqueous and Anhydrous HF*, From: William J. Hague, Allied-Signal, To: Craig Matthiessen, U.S. Environmental Protection Agency, August 18, 1992. (293.3)

ED_002700_00005500-00313

EXHIBIT XIII-3
General Descriptions of Hydrogen **Fluoride** Accidents From the ERNS **Database**

DATE	FACILITY (TYPE)*	STATE	QUANTITY RELEASED	CONCENTRATION***	CAUSE/DESCRIPTION
12-19-86	Armco (SS)	PA	1,590 lbs**	70% aqueous	leak on storage tank lining
1-19-87	Intel (EL)	CA	5 lbs	aqueous	operator error, spill from waste tank
2-3-87	Allied-Signal (CFC)	IL	171 lbs	anhydrous	pump failed into contained area
2-5-87	Allied (CFC)	LA	100 lbs	anhydrous	leak in fluorocarbons plant
2-26-87	J&L Specialty Products	PA	9,450 lbs**	aqueous	acid tank spill lost from containment
3-8-87	Allied Chemicals (C)	NJ	unknown	anhydrous	unknown
4-2-87	Fairchild Semiconductors (EL)	CA	500 lbs	aqueous	2 acid drums reacted, cause unknown
4-6-87	Du Pont (C)	NJ	90 lbs	anhydrous	leak in one-ton cylinder
4-11-87	Allied (T)	MI	63 lbs	70% aqueous	leak from truck
5-6-87	Du Pont (C)	TX	105 lbs	anhydrous	reactor seal failure
6-16-87	Mobil (R)	NJ	200 lbs**	anhydrous	line failure in alkylation unit
6-25-87	Allegheny Ludlum (T)	PA	135 lbs	70% aqueous	hose failed during truck unloading
6-25-87	Ozark Mahonig (C)	OK	3 lbs	anhydrous	fire in unit, unknown cause
6-26-87	Chem-Security Systems (T)	OR	8 lbs	anhydrous	truck valve malfunction
7-24-87	Moreland (U)	NY	unknown	anhydrous	leaks from two corroded cylinders
8-3-87	Ashland Chemical (C)	PA	500 lbs**	anhydrous	anhydrous storage leak
8-7-87	A & B Industrial (T)	MI	180 lbs	60% aqueous	drum leak in truck
8-19-87	Monsanto (C)	MO	200 lbs	aqueous	waste water sewer leak
10-1-87	Matlack Trucking (T)	CA	unknown	anhydrous	truck valve broke, release to air
10-20-87	Mercury Stainless (SS)	OH	500 lbs	70% aqueous	pump hose prime line valve rupture
10-30-87	Marathon (R)	TX	53,200 lbs**	anhydrous	crane accident broke pipes on tank
11-13-87	Delco Electronics (EL)	IN	90 lbs	aqueous	pump failed causing tank overflow
11-29-87	Mobil (R)	CA	unknown	anhydrous	pipe broke during repairs, alkylation unit,
12-18-87	Allied-Signal (C)	IL	1,800 lbs	1% aqueous	gasket leak in transfer piping

ED_002700_00005500-00314

EXHIBIT XIII-3 (continued)
General Description of Hydrogen Fluoride Accidents From the ERNS Database

DATE	FACILITY (TYPE)*	STATE	RELEASED		
1-4-88	Classic Glass (GE)	NC	450 lbs	aqueous	drain from building waste etchant solution
1-27-88	Phillips ECG (EL)	OH	unknown	25% aqueous	valve corrosion
2-3-88	Soco-Wester Chem (C)	CA	250 lbs	70% aqueous	top of drum blew off
3-6-88	Amoco Oil (R)	TX	220 lbs	anhydrous	circulation line, nipple failed on alkylation unit
5-4-88	Chevron (R)	PA	1,300 lbs	anhydrous	alkylation unit heater stack, unknown cause
5-20-88	Matlack Trucking (T)	MO	90 lbs	anhydrous	rupture disk failed on trailer
5-28-88	GE Solid State (EL)	PA	1,800 lbs	aqueous	leak in storage tank wall
7-7-88	Aratex Services (U)	CA	unknown	anhydrous	HF mixed with Cl_2
7-12-88	Mobil Oil (R)	NJ	unknown	anhydrous	propane and small amount of HF leaked
8-4-88	General Chemical (C)	CA	127 lbs	anhydrous	line parted on discharge of pump, 200 gallon reactor
8-5-88	Matlack	MO	unknown	23% aqueous	sump plate hole cover on trailer leaked
8-21-88	Norfolk Southern Railroad (T)	VA	9 lbs	aqueous	gallon jug on train leaked
8-22-88	Balero Refining (R)	TX	> RQ	anhydrous	alkylation unit leak
8-22-88	Pennwalt (T)	KY	580 lbs	70% aqueous	leak occurred on loading line to truck
8-26-88	Delco Moraine (T)	OH	27 lbs	aqueous	residue in an empty drum spilled
8-27-88	Shipper	PR	279 lbs	anhydrous	container leaked on ship
8-27-88	unknown (T)	PR	270 lbs	anhydrous	2 drums fell off pallet on loading dock and leaked
8-28-88	Allied-Signal (CFC)	LA	150 lbs	anhydrous	hole in catalyst stripper
9-11-88	Reynolds Metals (T)		2,250 lbs	anhydrous	container failure
10-5-88	J & L Specialty Products (SS)	OH	3,418 lbs**	aqueous	piping system on raw acid storage tank leaked
10-13-88	Chevron (R)	TX	unknown	anhydrous	three alarm fire, alkylate or other
10-18-88	Phillips (R)	TX	1,600 lbs**	anhydrous	bleeder valve on acid tank opened
10-20-88	Metellics (U)	CA	unknown	anhydrous	incompatible with chemical mix

ED_002700_00005500-00315

EXHIBIT XIII-3 **(continued)**
General Description of Hydrogen Fluoride **Accidents** From the ERNS Database

DATE	FACILITY (TYPE)*	STATE	QUANTITY RELEASED	CONCENTRATION***	CAUSE/DESCRIPTION
12-15-88	Florida Marine Chem (C)	FL	unknown	aqueous	solution used to clean boat hulls spilled into water
12-20-88	Philips Display (GE)	OH	150 lbs**	25% aqueous	operator error, tank overflow from misvalving
1-11-89	Safeway (U)	CA	unknown	anhydrous	unknown
2-6-89	Hi-Pure Chemical (C)	PA	unknown	aqueous	storage tank had leak in liner
3-18-89	Vista Chemical (C)	LA	unknown	anhydrous	acid regenerator column flange leak
4-18-89	Rogers Cartage (T)	IL	225 lbs	anhydrous	tank truck rupture disk cracked
4-24-89	MEMC Electronic Materials (EL)	SC	750 lbs	aqueous	HF with nitric acid and acetic acid spilled from mixing area
5-12-89	unknown (T)		45 lbs	aqueous	truck wreck caused drums to leak
5-23-89	Pennwalt (C)	NJ	unknown	anhydrous	pipelines at plant leaking
5-30-89	Ashland Petroleum (R)	MN	10 lbs	anhydrous	alkylation unit valve failure
6-23-89	Mobil Oil (R)	CA	9 lbs	anhydrous	unknown
6-30-89	Ripley FD (T)	TN	unknown	aqueous	300 gallon drum leaking behind facility
7-19-89	Westinghouse (SS)	UT	unknown	aqueous	pickling tank drain line failure
7-24-89	Learjet (A)	KS	unknown**	aqueous	processing tank, 6,000 gallon liner failure
8-9-89	Carpenter Technology (SS)	PA	795 lbs**	70% aqueous	10,000 gallon tank began leaking at couplings
8-12-89	General Chemical (C)	CA	4,000 lbs**	49% aqueous	58,000 lbs storage tank leak
8-30-89	Kennametal (U)	NV	174 lbs**	aqueous	pipe leaked at flange
9-8-89	Yellow Freight (T)	KS	495 lbs	aqueous	etchant solution ate through drum
3-8-90	Darivain (U)	TX	unknown	anhydrous	storage tank relief valve failure
3-15-90	Roadway Express (T)	GA	100 lbs	44% aqueous	30 gallon drum puncture
4-11-90	Mobil Oil (R)	LA	150 lbs	anhydrous	HF alkylation unit pump seal failure
4-20-90	Golden West Refinery (R)	CA	2 lbs	anhydrous	seal rupture on valve
4-28-90	unknown (U)	CA	unknown	aqueous	acid bath left overnight vented

ED_002700_00005500-00316

EXHIBIT XIII-3 (continued)
General Description of Hydrogen Fluoride Accidents From the ERNS Database

DATE	FACILITY (TYPE)*	STATE	QUANTITY RELEASED	CONCENTRATION***	CAUSE/DESCRIPTION
5-26-90	Texas Instruments (EL)	TX	188 lbs**	49% aqueous	9,000 gallon liner cracked
6-12-90	AERO Chem (T)	CA	19 lbs	70% aqueous	storage tank vent leaked during delivery
6-26-90	Intel (EL)	CA	800 lbs**	2% aqueous	spill was contained and neutralized
7-2-90	Merlin Specialty (U)	MD	900 lbs	anhydrous	storage tank, unknown cause
7-6-90	Teledyne (U)	OR	unknown	aqueous	system transfer line failed, unknown cause
7-6-90	Chemical Dynamics (T)	TX	6,812 lbs**	aqueous	2-inch pipe coupling failed
7-31-90	General Chemical (C)	CA	350 lbs**	aqueous	drum transfer, sump basin malfunction, spill
8-6-90	Flowline (SS)	PA	852 lbs**	aqueous	leak of spent HF from storage tank
8-7-90	BP Oil (R)	LA	21 lbs	anhydrous	thermowell leak
8-15-90	Marathon Petroleum (R)	LA	1 lb	anhydrous	leaking line in fractionator, valve shut
9-18-90	Local Fairchild (A)	CA	30 lbs	aqueous	holding tank overflow, spill to floor
9-19-90	Intel (EL)	CA	82,125 lbs	aqueous	contained and neutralized
9-27-90	General Chemical (C)	CA	350 lbs**	aqueous	drain line valve failed
10-3-90	Pratt & Whitney (A)	CT	4,500 lbs	aqueous	nitric acid and HF mixed due to failed check valve in waste line
10-8-90	Chevron (R)	UT	225 lbs**	anhydrous	contractor ruptured valve during repairs
10-25-90	General Electric (EL)	KY	150 lbs	aqueous	6" drain line broke
11-12-90	Cifco Industries (U)	OH	1,800 lbs	aqueous	HF and nitric acid spilled when valve broke on storage tank
11-14-90	Alcoa (AL)	AR	576 lbs**	anhydrous	accidental release from production (AlF_3)
11-29-90	Ashland (T)	OH	9 lbs	anhydrous	valve left open on truck, spill on road
12-4-90	Atochem (T)	KY	200 lbs	anhydrous	rail car overfilled
12-5-90	Timet (U)	OH	9,000 lbs	aqueous	hole in bottom of tank, unknown cause
2-5-91	unknown (U)	CA	9 lbs	anhydrous	unknown

ED_002700_00005500-00317

EXHIBIT XIII-3 (continued)
General Description of Hydrogen Fluoride **Accidents** From the ERNS Database

DATE	FACILITY (TYPE)*	STATE	QUANTITY RELEASED	CONCENTRATION***	**CAUSE/DESCRIPTION**
5-6-91	Ausimot (CFC)	NJ	200 lbs	anhydrous	transfer pipe between two tanks failed due to corrosion
7-7-91	Formosa Plastics (C)	TX	unknown	anhydrous	30 minute release to air
7-17-91	ARMCO steel (SS)	PA	unknown	aqueous	spill into TP to creek
9-9-91	Kelly Industrial (T)	MA	1 lb	aqueous	vandals opened spigot on drum
10-12-91	unknown (T)		9 lbs	anhydrous	spilled on pavement

Source: *ERNS Database*, U.S. Environmental Protection Agency, U.S. Department of Transportation, U.S. Coast Guard, National Response Center, 1987-1991. Data as of November 10, 991. (139.525)

- Facility Type

(A) Aircraft manufacture
(AL) Aluminum manufacture
(C) Chemical manufacturing, including the production of HF
(CFC) Chlorofluorocarbon manufacturing
(CL) HF used in cleaning
(EL) Manufacture of electronics, including semi-conductors
Glass etching, including TV cathode ray tube production
(R) Oil refineries
(SS) Stainless steel manufacture
Transportation, includes loading and unloading, equipment failures during transport, and package failures during transport.
(U) Undetermined

** Release quantities have been updated with facility-verified ARIP information.
*** Some data on concentration (aqueous or anhydrous) was provided by Allied-Signal.[3]

[3] Letter, *Segregation of Databases for Aqueous and Anhydrous HF,* From: William J. Hague, Allied-Signal, To: Craig Matthiessen, U.S. Environmental Protection Agency, August 18, 1992. (293.3)

ED_002700_00005500-00318

EXHIBIT XIII-4
General Descriptions of Hydrogen Fluoride **Accidents** From the **HMIS** Database

DATE	FACILITY (TYPE)*	STATE	QUANTITY RELEASED	MEDIA AFFECTED	CONCEN-TRATION**	RELEASE EVENT	MIGRATION OFF SITE	CAUSE/DESCRIPTION
5-2-80	United Parcel Service, Inc. (T)	CT	unknown		anhydrous	spill		dropped cylinder
1-12-81	Ryder Truck Lines, Inc. (T)	LA	8 lbs		anhydrous	spill		valve failure on cylinder
1-14-81	Ryder Truck Lines, Inc. (T)	FL	40 lbs		aqueous	spill		bottom of a plastic drum failed
6-29-81	APA Transport Corp. (T)	NJ	8 lbs		aqueous	spill		dropped plastic bottle
2-18-84	Illinois Central Gulf Railroad (T)	LA	unknown		anhydrous	spill		loose valve on a tank car
2-4-85	Consolidated Rail Corporation (T)	IN	6,400 lbs	air	anhydrous	vapor release	vapor cloud traveled 2.5 miles	leak occurred when weld failed on pressurized tank car because of continued transportation of a tank car that was reported to be leaking
3-28-85	Matlack Inc. (T)	CA	unknown		anhydrous	vapor release		packaging failed on cargo tank
5-14-85	Baltimore & Ohio Railroad Co. (T)	OH	unknown	air	anhydrous	vapor release		loose valve caused venting on tank car
6-9-85	Southern Pacific (T)	AR	0.48 lbs		anhydrous	spill		derailment caused loose valve on pressurized tank car
9-26-85	Matlack Inc. (T)	CA	16 lbs		anhydrous	spill		ruptured piping on cargo tank
11-27-85	Illinois Central Gulf Railroad (T)	LA	160 lbs		anhydrous	spill		packaging failed on tank car
6-25-87	Bendix Corp. (T)	PA	800 lbs		70% aqueous	spill		packaging failed on tank trailer
1-19-89	ABF Freight System, Inc. (T)	OR	200 lbs		aqueous	spill		loose valve on drum
4-18-89	Rogers Cartage Co. (T)	CA	200 lbs		aqueous	spill		defective valve on cargo tank

ED_002700_00005500-00319

EXHIBIT XIII-4 **(continued)**
General **Description** of Hydrogen **Fluoride Accidents** From the **HMIS** Database

DATE	FACILITY (TYPE)*	STATE	QUANTITY RELEASED	MEDIA AFFECTED	CONCEN-TRATION**	RELEASE EVENT	MIGRATION OFF SITE	CAUSE/DESCRIPTION
5-15-89	Markair (T)	AK	8 lbs		aqueous	spill		loose valve on jug
7-21-89	Consolidated Freightways (T)	IN	8 lbs		aqueous	spill		loose valve and improper blocking on plastic jug
1-26-90	Union Pacific Railroad Co. (T)	AR	8 lbs		anhydrous	vapor release		loose valve on tank car
1-26-90	United Parcel Service, Inc. (T)	CA	0.32 lbs		aqueous	spill		dropped and ruptured closure of plastic bottle
8-27-90	Enroserv Midwest, Inc. (T)	OH	16 lbs		aqueous	spill		corrosion on the bottom of the inner liner of a metal drum

Source: *Hazardous Materials Information System (HMIS)*, Department of Transportation, January 1, 1980 - December 31, 1990. Data as of November 11, 1991. (155)

* Facility Type

(A) Aircraft manufacture
(AL) Aluminum manufacture
(C) Chemical manufacturing, including the production of HF
(CFC) Chlorofluorocarbon
HF used in cleaning
(EL) Manufacture of electronics, including semi-conductors
(GE) Glass etching, including TV cathode ray tube production
(R) Oil refineries
(SS) Stainless steel manufacture
(T) Transportation, includes loading and unloading, equipment failures during transport, and package failures during transport.
(U) Undetermined

* * Some data on concentration (aqueous or anhydrous) was provided by Allied-Signal.[4]

[4] Letter, *Segregation of Databases for Aqueous and Anhydrous HF,* From: William J. Hague, Allied-Signal, To: Craig Matthiessen, U.S. Environmental Protection Agency, August 18, 1992. (293.3)

ED_002700_00005500-00320

EXHIBIT XIII-5
General Descriptions of Hydrogen Fluoride Accidents From Other Sources

DATE	FACILITY (TYPE)*	STATE	QUANTITY RELEASED	MEDIA AFFECTED	CONCEN-TRATION**	RELEASE EVENT	MIGRATION OFF SITE	CAUSE/DESCRIPTION	SOURCE
6-5-78	Phillips Petroleum Company (R)	KS		air	anhydrous	vapor release		operator opened valve without checking pressure of the vessel causing acid vapors to back up into the gas purge line and release from tips of pilot light and drain valve	Newspaper [1]
6-5-85	Allied Corporation (C)	LA	10,000 lbs		anhydrous	vapor release		premature rupture disk failure at normal operating pressures and human failure to detect a missing pressure gauge assembly caused release	Accident Report[2]
1-4-86	Kerr-McGee (R)	OK	29,500 lbs	air	anhydrous	vapor release	air, land	operator heated overfilled cylinder, in violation of standard operating procedures, resulting in a cylinder failure and HF release	Newspaper [3]
11-24-87	Mobil Torrance Refinery (R)	CA	100 lbs	air	anhydrous	spill	no	due to malfunctioning monitoring devices and human error, HF overflowed into a tank and mixed with another chemical, causing an explosion	Newspaper [4]
1-13-90	Powerine Oil Company (R)	CA			anhydrous	vapor release		corroded pipe holding HF ruptured as employees were trying to replace it	Newspaper [5]

* Facility Type

(A) Aircraft manufacture
(AL) Aluminum manufacture
(C) Chemical manufacturing, including the production of H F
(CFC) Chlorofluorocarbon manufacturing
(CL) HF used in cleaning
(EL) Manufacture of electronics, including semi-conductors
(GE) Glass etching, including TV cathode ray tube production
(R) Oil refineries
(SS) Stainless steel manufacture
(T) Transportation, includes loading and unloading, equipment failures during transport, and package failures during transport.
(U) Undetermined

** Some data on concentration (aqueous or anhydrous) was provided by Allied-Signal.

ED_002700_00005500-00321

ENDNOTES

1. *The Kansan,* "Acid Leak Under Lens at Phillips," June 7, 1978. (03)
2. Letter, From: E.C. Calamari, Allied-Signal, Baton Rouge, LA, To: Gustave Von Bonungen, LA Department of Environmental Quality, Baton Rouge, LA, June 12, 1985. (294b)
3. *Hazardous Materials Intelligence Report*, "Leak of Toxic Gas at OK Uranium Processing Plant," January 10, 1986, p 1. (520)
4. Stein, George, "Mobil Refinery Explosion Laid to Human Error," *Los Angeles Times,* February 11, 1990, p B1. (463.5)
5. Daunt, Tina, "Officials Probe Chemical Leak That Injured 7 at Refinery," *Los Angeles Times,* February 11, 1990, p J1. (134)

ED_002700_00005500-00322

APPENDIX XIV
DEATHS, INJURIES, OR EVACUATIONS CAUSED BY HYDROGEN FLUORIDE ACCIDENTS

This appendix presents information on deaths, injuries, or evacuations caused by hydrogen fluoride accidents listed in the ARIP, AHE, ERNS, and HMIS data bases and other sources.

EXHIBIT XIV-1

Deaths, Injuries, or Evacuations Caused by Hydrogen Fluoride Accidents Listed in the ARIP Database

DATE	FACILITY	STATE	EVACUATION	ON-SITE INJURIES	OFF-SITE INJURIES	DEATHS
12-19-86	Armco, Inc.	PA	no	1	0	0
10-30-87	Marathon Petroleum	TX	~5,800 general public	0	1,037	0
1-17-89	3M	AL	no	1	0	0
6-12-89	Hughes Aircraft	CA	no	1	0	0
7-24-89	Learjet, inc.	KS	no	2	0	0
3-15-91	Roadway Express	GA	no	1	0	0

Source: *ARIP Database,* U.S. Environmental Protection Agency, 1986 to 1991. Data as of January 29, 1992. (45)

ED_002700_00005500-00323

EXHIBIT XIV-2

Deaths, Injuries, or Evacuations Caused by Hydrogen Fluoride Accidents Listed In the AHE Database

DATE	FACILITY	STATE	EVACUATION	INJURIES	DEATHS
4-12-83	Alchem-tron, Inc.	OH	unknown	1	0
10-10-83	New Jersey Warehouse	NJ	150 evacuated	0	0
10-17-83	Teff Freight Lines	CA	100 residents evacuated	0	0
2-5-85	Conrail Railroad	IN	yes	0	0
3-3-85	McDonnell Douglas	MO	no	0	2
3-3-85	unknown	CO	no	1	0
5-14-85	unknown	OH	yes	0	0
7-5-85	SHMAS Contracting	NJ	no	1	0
8-27-85	unknown	CA	unknown	2	0
9-12-86	Conway Central Express	MI	no	1	0
10/30/87	Marathon Petroleum	TX	~5,800* residents evacuated	1,037*	0

Source: *AHE Data Base*, U.S. Environmental Protection Agency, 1960-1987. Data as of June 5, 1991. (05)

* Number has been updated with facility-verified ARIP information.

ED_002700_00005500-00324

EXHIBIT XIV-3

Deaths, Injuries, or Evacuations Caused by Hydrogen Fluoride Accidents Listed In the ERNS Database

DATE	FACILITY	STATE	EVACUATION	INJURIES (ON- OR OFF-SITE)	DEATHS
6-25-87	Ozark Mahonig	OK	yes	1	0
10-30-87	Marathon Petroleum	TX	yes	~1000	0
8-22-88	Balero Refining	TX	yes	0	0
10-18-88	Phillips 66	UT	no	2	0
10-20-88	Metellics	CA	yes	0	0
1-11-89	Safeway	CA	no	1	0
6-23-89	Mobil Oil	CA	no	1	0
7-24-89	Learjet	KS	13	0	0
9-8-89	Yellow Freight	KS	yes	6	0
10-3-90	Pratt & Whittney	CT	no	4	0
10-8-90	Chevron	UT	no	1	0

Source: *ERNS Data Base*, U.S. Environmental Protection Agency, U.S. Department of Transportation, U.S. Coast Guard, National Response Center, 1987-1991. Data as of November 10, 1991. (139.525)

ED_002700_00005500-00325

EXHIBIT XIV-4

Deaths, Injuries, or Evacuations Caused by Hydrogen Fluoride Accidents Listed In the HMIS Database

DATE	FACILITY	STATE	EVACUATION	ON-SITE INJURIES	OFF-SITE INJURIES	DEATHS
2-4-85	Consolidated Rail Corp	IN	1,500 evacuated in 1.1 mi^2 area	4 response personnel	71 others	0
3-28-85	Matlack Inc.	CA	no	6	0	0
5-14-85	Baltimore & Ohio Railroad Co.	OH	yes	0	0	0
6-25-87	Bendix Corp.	PA	no	1	unknown	0
5-15-89	Markair	AK	no	1	unknown	0

Source: *Hazardous Materials Information System (HMIS)*, Department of Transportation, January 1, 1980 - December 31, 1990. Data as of November 11, 1991. (155)

ED_002700_00005500-00326

EXHIBIT XIV-5

Deaths, Injuries, or Evacuations Caused by Hydrogen Fluoride Accidents Listed in Newspapers and Accident Reports

DATE	FACILITY	STATE	EVACUATION	ON-SITE INJURIES	OFF-SITE INJURIES	DEATHS
6-5-78[1]	Phillips Petroleum Company	KS	unknown	34	0	0
6-5-85[2]	Allied Corporation	LA	facility employees	2	0	0
1-4-86[3]	Kerr-McGee	OK	facility employees	100	0	1
1-24-87[4]	Mobil Torrance Refinery	CA	unknown	3	0	0
1-13-90[5]	Powerine Oil Company	CA	unknown	7	0	0

1. "Acid Leak Under Lens at Phillips," *The Kansan*, June 7, 1978. (03)
2. Letter, From: E.C. Calamari, Allied-Signal, Baton Rouge, LA, To: Gustave Von Bonungen, LA Department of Environmental Quality, Baton Rouge, LA, June 12, 1985. (294b)
3. "Leak of Toxic Gas at OK Uranium Processing Plant," Hazardous Materials Intelligence Report, January 10, 1986, p 1. (520)
4. Cole, T.D., Mobil Oil Corporation, comments from technical review of *Hydrogen Fluoride Study Report to Congress*, Draft May 8, 1992, June 4, 1992. (126)
5. Daunt, Tina, "Officials Probe Chemical Leak That Injured 7 at Refinery," *Los Angeles Times*, February 11, 1990, p J1. (134)

This page intentionally left blank.

ED_002700_00005500-00328

APPENDIX XV
POPULATION CHARACTERIZATION

Populations within a one-mile and five-mile radius of selected facilities that produce, use, or handle anhydrous HF were estimated by use of 1990 census data[1]. These facilities and estimated populations around them are shown in Exhibit XV-1. Facilities examined include HF producers, fluorocarbon manufacturers, petroleum refineries with HF alkylation units, and facilities that reported inventories of 100,000 pounds or greater in the 1990 Toxic Release Inventory (TRI) database. Population estimates were developed for facilities on this list if further review indicated that they use anhydrous HF rather than HF in solution. The location of each facility was determined by using latitude and longitude coordinates reported in the TRI database. Using the facility location as the center, circles with one-mile and five-mile radii were defined. Populations were based on census blocks with centroids (the approximate center points of census blocks) within the radii. For example, if the centroid of a census block is within the one-mile or five-mile radius, the entire population of the census block is included in the estimate even though a portion of the population is located outside the radius. On the other hand, the population of a census block with a centroid located outside the radius would not be counted within the population estimate even though a portion of the census block is physically located within the radius, Thus, the populations represented in Exhibit XV-1 are approximations. Populations are estimated to the nearest thousand; populations estimated as less than 500 are reported as "<1,000."

ED_002700_00005500-00329

EXHIBIT XV-1
Population Characterization

FACILITY NAME	LOCATION	COUNTY	POPULATION WITHIN RADIUS 1 MILE	5 MILE
3M	Decatur, AL	Morgan	< 1,000	21,000
		Limestone	0	1,000
Great Lakes Chemical Corp. - South Plant	El Dorado, AR	Union	0	4,000
Kerley AG Products Inc.	Phoenix, AZ	Maricopa	3,000	191,000
Allied-Signal Inc.	El Segundo, CA	Los Angeles	Undetermined	
Dow Chemical Co.	Pittsburgh, CA	Contra Costa	<1,000	105,000
Du Pont	Antioch, CA	Contra Costa	8,000	69,000
General Chemical Corp.	Pittsburgh, CA	Contra Costa	2,000	56,000
Golden West Refining Co.	Santa Fe Springs, CA	Los Angeles	14,000	411,000
Mobil Oil Corp.	Torrance, CA	Los Angeles	9,000	550,000
Powerine Oil Co.	Santa Fe Springs, CA	Los Angeles	12,000	522,000
Ultramar Inc.	Wilmington, CA	Los Angeles	1,000	436,000
General Chemical Corp.	Claymont, DE	New Castle (DE)	2,000	56,000
		Salem (NJ)	0	3,000
		Delaware (PA)	0	75,000
3M	Cordova, IL	Clinton (IA)	1,000	6,000
		Rock Island	0	1,000
		Whiteside	0	1,000

ED_002700_00005500-00330

EXHIBIT XV-1
Population Characterization (continued)

FACILITY NAME	LOCATION	COUNTY	POPULATION WITHIN RADIUS MILE	5 MILE
Allied-Signal Inc. - Danville Works	Danville, IL	Vermilion (IL)	2,000	38,000
		Vermillion (IN)	0	1,000
Allied-Signal Inc.	Metropolis, IL	Massac	1,000	9,000
		McCracken (KY)	0	2,000
Chemtech Industries Inc.	East Saint Louis, IL	St. Clair	5,000	98,000
Clark Oil & Refining Corp.	Hartford, IL	Madison	0	23.000
Clark Oil & Refining Corp.	Blue Island, IL	Cook	10,000	380,000
Marathon Petroleum Co.	Robinson, IL	Crawford	0	9,000
Mobil Joliet Refining Corp.	Joliet, IL	Will	0	12,000
Uno-Ven Co.	Lemont, IL	Will	0	69,000
		Cook	0	10,000
		DuPage	0	1,000
Indiana Farm Bureau Co-op. Assn. Inc.	Mount Vernon, IN	Posey	4,000	10,000
Marathon Oil Co.	Indianapolis, IN	Marion	3,000	61,000
		Hamilton	0	4,000
		Boone	0	10,000
Atochem	Wichita, KS	Sedgewick	0	34,000
Coastal Derby Refining Co.	Wichita, KS	Sedgewick	9,000	212,000
Coastal Derby Refining Co.	El Dorado, KS	Butler	0	14,000

ED_002700_00005500-00331

EXHIBIT XV-1
Population Characterization (continued)

FACILITY NAME	LOCATION	COUNTY	POPULATION WITHIN RADIUS 1 MILE	5 MILE
Farmland Industries Inc.	Coffeyville, KS	Montgomery	2,000	15,000
		Nowata (OK)	0	1,000
National Cooperative Refinery Association	McPherson, KS	McPherson	4,000	13,000
Texaco Refining & Marketing Inc. El Dorado Plant	El Dorado, KS	Butler	3,000	13,000
Total Petroleum Inc.	Arkansas City, KS	Cowley	1,000	16,000
Ashland Petroleum Co.	Ashland, KY	Boyd	< 1,000	6,000
		Lawrence (OH)	0	7,000
Atochem North America Inc.	Calvert City, KY	Marshall	0	4,000
		Livingston	0	2,000
Du Pont Louisville Works	Louisville, KY	Jefferson	5,000	186,000
		Floyd (IN)	0	8,000
Allied-Signal Inc. Geismar Plant	Geismar, LA	Iberville	0	4,000
		Ascension	0	3,000
Allied-Signal Inc. Baton Rouge South	Baton Rouge, IA	East Baton Rouge	1,000	127,000
		West Baton Rouge	0	11,000
BP Oil Co.	Belle Chasse, LA	Plaquemines	0	0
Laroche Chemicals Inc.	Gramercy, LA	St. James	0	10,000
		St. John the Baptist	0	6,000
Marathon Petroleum Co.	Garyville, LA	St. John the Baptist	2,000	15,000

ED_002700_00005500-00332

EXHIBIT XV-1
Population Characterization (continued)

FACILITY NAME	LOCATION	COUNTY	POPULATION WITHIN RADIUS 1 MILE	5 MILE
Mobil Oil Corp. Chalmette Refinery	Chalmette, LA	St. Bernard	4,000	56,000
		Jefferson	0	34,000
		Plaquemines	0	1,000
		Orleans	2,000	95,000
Murphy Oil USA Inc. Meraux Refinery	Meraux, LA	St. Bernard	3,000	59,000
		Jefferson	0	8,000
		Plaquemines	0	1,000
		Orleans	0	50,000
Placid Refining Co.	Port Allen, LA	West Baton Rouge	<1,000	11,000
		East Baton Rouge	0	99,000
Vista Chemical Co. - Lake Charles Chemical Co.	Westlake, LA	Calcasieu	3,000	51,000
Dow Corning Corp.	Midland, MI	Bay	0	2,000
		Midland	0	2,000
		Saginaw	0	1,000
Du Pont Montague Works	Montague, MI	Muskegon	1,000	9,000
Total Petroleum Inc.	Alma, MI	Gratiot	2,000	18,000
3M	Cottage Grove, MN	Washington	1,000	25,000
		Dakota	0	12,000
Ashland Petroleum Co. St. Paul Park Refinery	Saint Paul Park, MN	Dakota	3,000	49,000
		Washington	1,000	34,000
		Ramsey	0	2,000
Mallinckrodt Specialty Chemicals Co.	Saint Louis, MO	St. Louis	Undetermined	
		St. Clair (IL)	0	32,000
		Madison (IL)	0	26,000

ED_002700_00005500-00333

EXHIBIT XV-1
Population Characterization (continued)

FACILITY NAME	LOCATION	COUNTY	POPULATION WITHIN RADIUS 1 MILE	5 MILE
Cenex Refinery	Laurel, MT	Yellowstone	0	8,000
Conoco Billings Refinery	Billings, MT	Yellowstone	3,000	77,000
Exxon Co. USA - Billings Refinery	Billings, MT	Yellowstone	1,000	36,000
Amoco Oil Co.	Mandan, N D	Morton	3,000	15,000
		Burleigh	0	15,000
Ausimont USA Inc.	Thorofare, NJ	Gloucester	1,000	79,000
		Philadelphia (PA)	0	32,000
		Delaware (PA)	0	11,000
Du Pont Chambers Works	Deepwater, NJ	Salem	1,000	25,000
		New Castle (DE)	1,000	71,000
Mobil Oil Corp.	Paulsboro, NJ	Gloucester	3,000	34,000
		Delaware (PA)	0	65,000
		Philadelphia (PA)	0	15,000
Giant Refining Co. - Ciniza	Gallup, NM	McKinley	0	1,000
Navajo Refining Co.	Artesia, NM	Eddy	2,000	12,000
Alcoa	Massena, NY	St. Lawrence	0	14,000
Occidental Chemical Corp. - Niagara Plant	Niagara Falls, NY	Niagara	4,000	80,000
		Erie	0	10,000
Ashland Petroleum Co. Canton Refinery	Canton, OH	Stark	2,000	129,000

ED_002700_00005500-00334

EXHIBIT XV-1
Population Characterization (continued)

FACILITY NAME	LOCATION	COUNTY	POPULATION WITHIN RADIUS 1 MILE	5 MILE
Conoco Ponca City Ref.	Ponca City, OK	**Kay**	5,000	29,000
		Osage	0	2,000
Kerr-McGee Refinery Corp.	Wynnewood, OK	**Garvin**	**< 1,000**	4,000
		Murray	0	<1,000
Sequoyah Fuels Corp.	Gore, OK	Sequoyah	0	0
Sun Refining & Marketing Co.	Tulsa, OK	Tulsa	2,000	121,000
		Osage	0	6,000
Total Petroleum Inc.	Ardmore, OK	Carter	0	0
Reynolds Metal Co. (produce)	Troutdale, OR	Multnomah	0	61,008
Air Products & Chemicals Inc.	**Tamaqua,** PA	Schuylkill	0	15,000
Ashland Chemical Inc.	**Easton,** PA	Northampton	5,000	76,000
		Bucks	*0*	1,000
		Warren (NJ)	*0*	20,000
BP Oil Co. Marcus Hook Refinery	Trainer, PA	**Delaware**	4,000	115,600
		Glouster (NJ)	0	5,000
Chevron USA	Philadelphia, PA	Philadelphia	<1,000	381,000
		Delaware	0	105,060
		Gloucester (PA)	0	35,000
		Camden (NJ)	0	6,000
Mapco Petroleum Inc.	Memphis, TN	Shelby	3,000	142,000
		Crittendon (AR)	0	2,000
Amoco Oil Co. Texas City Refinery	Texas City, TX	Galveston	3,000	54,000

ED_002700_00005500-00335

EXHIBIT XV-1
Population Characterization (continued)

FACILITY NAME	LOCATION	COUNTY	POPULATION WITHIN RADIUS 1 MILE	5 MILE
Champlin Refining & Chemicals Inc.	Corpus Christi, TX	Nueces	*5,000*	*97,000*
Chevron USA Inc. Port Arthur Refinery	Port Arthur, TX	Jefferson	*0*	*30,000*
Coastal Refining & Marketing, Inc.	Corpus Christi, TX	Nueces	*24,000*	*186,000*
Crown Central Petroleum Houston Refinery	Pasadena, TX	Harris	*2,000*	*220,000*
Diamond Shamrock Refining & Marketing Co. Three Rivers	Three Rivers, TX	Live Oak	*1,000*	*2,000*
Du Pont Corpus Christi Plant	Ingleside, TX	San Patricio	*0*	*16,000*
Du Pont La Porte Plant	La Porte, TX	Harris	*0*	*59,000*
Fina Oil & Chemical Co.	Big Spring, TX	Howard	*1,000*	*18,000*
Koch Refining Co.	Corpus Christi, TX	Nueces	*0*	*21,000*
Marathon Petroleum Co.	Texas City, TX	Galveston	1,000	*52,000*
Monsanto Co.	Alvin, TX	Brazoria	Undetermined	
Phibro Refining Inc.	Texas City, TX		Undetermined	
Phillips 66 Co.	Borger, TX	Hutchinson	*0*	*13,000*
Phillips 66 Co. Sweeny Complex	Sweeny, TX	Brazoria	*0*	*5,000*
Shell Oil Co. Odessa Refinery	Odessa, TX	Ector	*0*	*55,000*

ED_002700_00005500-00336

EXHIBIT XV-1
Population Characterization (continued)

FACILITY NAME	LOCATION	COUNTY	POPULATION WITHIN RADIUS 1 MILE	5 MILE
Southwestern Refining Co.	Corpus Christi, TX	Nueces	*6,000*	*103,000*
Valero Refining Co.	Corpus Christi, TX	Nueces	*0*	*35,000*
Chevron USA Inc.	Salt Lake City, UT	Salt Lake	*0*	*0*
		Davis	*0*	*0*
Phillips 66 Co.	Woods Cross, UT	**Davis**	*9,000*	*66,000*
		Salt Lake	*0*	*1,000*
BP Oil Co.	Ferndale, WA	Whatcom	*0*	*7,000*
Murphy Oil USA	Superior, WI	Douglas	*1,000*	*28,000*
		St. Louis (MN)	*0*	*2,000*
Frontier Refining Inc.	Cheyenne, WY	**Laramie**	*8,000*	*64,000*

ED_002700_00005500-00337

ENDNOTES

1. "1990 Census of Population and Housing - Summary Tape Files," US. Department of Commerce, Bureau of the Census, Data User Services Division, Washington, D.C.

ED_002700_00005500-00338

APPENDIX XVI
DESCRIPTION OF HGSYSTEM AND SLAB

HGSYSTEM and **SLAB** are computer modeling systems which predict the dispersion of accidental releases of hazardous substances. The following describes the modeling systems, the inputs needed and the data outputs obtained.

HGSYSTEM

HGSYSTEM is a system of models developed for the prediction of the dispersion of accidental releases of HF and other gases in the atmosphere. The behavior of HF when mixed with moist air is very different than that of an ideal gas, and depending upon conditions the HF-air mixture can be either denser or much less dense than air. This behavior can significantly influence the dispersion of HF upon release into the atmosphere. HGSYSTEM follows an earlier version, HFSYSTEM, which was designed specifically for HF under contract to the Ambient Assessment Group, a subcommittee of an ad-hoc Industry Cooperative HF Mitigation Group sponsored by 20 companies from the chemical and petroleum industries. The system was based upon an existing model in the public domain called HEGADAS, a dense gas dispersion model.[1]

This system of models was developed with the following specifications:

* to account for the thermodynamics of released HF with air and moisture and cloud aerosol effects on cloud density;
* to simulate pressurized releases as well as evaporation from a pool;
* to predict concentrations over varying surface roughness conditions;
* to predict concentrations for varying averaging periods;
* to consider steady state, finite, and variable duration releases;
* to compute crosswind and downwind concentration profiles;
* to handle both dense gas and passive dispersion; and
* to compute release rates from storage vessels.

The individual models are designed for simulating the release of HF and to the subsequent dispersion of the gas in the atmosphere. The models may calculate time-dependent spillage of HF liquid or vapor from a pressurized vessel (HFSPILL); the steady-state or time-dependant evaporation of an HF source if the user is sure that a liquid pool would be formed based on the storage temperature and pressure (EVAP); the steady-state near-source behavior of HF (HFPLUME, HFFLASH, and HFJET); the ground-level dispersion of HF further downwind (HEGADAS-S for steady-state and HEGADAS-T for transient); and the far-field passive dispersion for plumes which do not slump back to the ground (PGPLUME). Another model, PLUME, calculates the steady-state near-source behavior of hazardous chemicals other than HF, and is similar to HFPLUME except that HF-specific thermodynamics have not been included. These HGSYSTEM models are outlined in the following Exhibit XVI-1.

ED_002700_00005500-00339

EXHIBIT XVI-1

Descriptions of Models in HGSYSTEM

MODEL	DESCRIPTION OF MODEL	GAS[1]	RELEASE[2]	
HFSPILL	Spills from pressurized vessel	HF	PR	TR
EVAP	Evaporation and spreading from a liquid pool	Both	UNPR	ST, TR
HFFLASH[3]	Flashing of HF	HF	PR	ST[3]
HFJET[4]	Jet flow	HF	PR	ST
HFPLUME	Jet flow and near-field dispersion	HF	PR	ST[5]
PLUME	Jet flow and near-field dispersion	Ideal	PR	ST[5]
HEGADAS-S	Ground level heavy gas dispersion	Both	Both	ST, FD[6]
HEGADAS-T	Ground level heavy gas dispersion	Both	Both	TR
PGPLUME	Elevated passive dispersion	Both	PR	ST, FD

1 Type of released gas: HF or Ideal gas
2 Type of release: pressurized (PR) or unpressurized (UNPR); steady-state (ST), finite duration (FD), or transient (TR)
3 If HFPLUME is not run, HFFLASH is used to set HF post-flash data required as input to HEGADAS. Although HFFLASH is a steady-state program, it can be interfaced with both HEGADAS-S and HEGADAS-T.
4 HFJET is a simplified version of HFPLUME and should not normally be used.
5 Although HFPLUME and PLUME are steady-state programs, they do accept a finite-duration input parameter (e.g., from HFSPILL in case of HFPLUME). This parameter is not used in HFPLUME/PLUME, but passed through to PGPLUME or HEGADAS-T.
6 HEGADASS is a steady-state program. HEGADAS-T is recommended for modeling finite-duration releases.

These models are stand-alone programs which can be run separately or can be linked together to simulate the various components of a release to the atmosphere. HGSYSTEM has an interactive program to allow the user to link the output from one model for use as the input into another model (e.g., the pool evaporation program, EVAP, calculates the data needed for dispersion calculations in the HEGADAS, heavy gas dispersion program).[2]

HGSYSTEM also has several utility programs and batch files to provide a user-friendly interactive environment, two data validation programs, three post-processor programs for generating printouts or plotting files, one program for displaying file contents, and one special program which checks for adequate memory for running the programs. The basic input files for the models are stored in a file and the user can select and **edit** the input files to specify individual parameters. For

ED_002700_00005500-00340

example, for HFSPILL the user can input such information as storage temperature and pressure, ambient atmospheric conditions, the quantity and composition of the liquid or vapor, and the pipe exit plane conditions, The output will calculate the mass-discharge rate which along with other parameters can be input into the model EVAP (evaporating pool model) or to the near-field jet/plume model HFPLUME.

HGSYSTEM takes into account changes in source strength over time, and whether the release is coming from a pressurized source, such as a tank or pipe, or a non-pressurized source, such as a pool or puddle. It also factors in 'surface roughness," i.e., whether the release is taking place in open country or in an area where buildings or trees would slow down dispersion. Also, HGSYSTEM predicts average concentration for any specified time period. HGSYSTEM, developed specifically to account for the unique properties associated with HF releases, has been expanded to also allow evaluation of the release and dispersion of other 'ideal' gases.

SLAB

SLAB is a computer model that simulates releases of dense gases and the atmospheric dispersion which follows. **SLAB** is capable of modeling both vapor releases and releases of liquid droplet-vapor mixtures. **SLAB** was developed by the University of California, Lawrence Livermore National Laboratory with support from the U.S. Department of Energy. Recent versions of **SLAB** were supported jointly by the United States Air Force Engineering and Services Center, and American Petroleum **Institute.**[3] The model is not particular to HF--any dense gas can be modeled with SLAB.

The **SLAB** model is designed to meet the following specifications:

* to account for the thermodynamics of liquid droplet formation in the emitted substance, evaporation of the emitted substance, and evaporation of water vapor due to ambient humidity;

* to consider steady state, finite duration, and instantaneous releases;

* to predict concentrations for various averaging periods;

* to predict (downwind) concentrations at various heights;

* to account for the thermodynamic effect of ground heating when a cloud is cooler than the ground;

* to simulate horizontal jet and vertical jet releases;

* to predict time-averaged volume concentrations, including contours and maximum centerline concentrations; and

* to account for lofting of a cloud if it becomes lighter-than-air.

Atmospheric dispersion is calculated by solving the conservation equations of mass, momentum, energy, and species. The equations are spatially averaged, and treat the cloud as a steady state plume, and/or a transient puff. Combinations of these dispersion modes are used to model four types of sources: an evaporating pool, a horizontal or vertical jet, or an instantaneous release. See Exhibit WI-2 for details on the source types. A continuous release (i.e., one with a long source duration) is treated as a steady state plume. A finite duration release is described as a steady state plume until the release stops. Then the cloud is treated as a transient puff. An instantaneous release is predicted using the puff dispersion mode.

EXHIBIT XVI-2

Descriptions of Source Types in SLAB

SOURCE TYPE	RELEASE HEIGHT	DISPERSION MODE
Evaporating Pool	Ground	Steady State[1], Transient Puff
Horizontal Jet	Elevated[2]	Steady State[3], Transient Puff
Stack or Vertical Jet	Elevated[2]	Steady State[3], Transient Puff
Instantaneous or Short Duration Evaporating Pool	Ground	Transient Puff

1 **If steady state is not reached for Evaporating Pool, SLAB switches to Short Duration Evaporating Pool.**
2 Release height may be set at zero (ground level) if desired.
3 **The steady state description is assumed for the duration of the active release.**

The input file for a **SLAB** run consists of 30 possible parameters, and must be created by the user. Necessary inputs include source type, gas properties, spill properties (i.e., source temperature), field properties (i.e., concentration averaging time), meteorological parameters (i.e., surface roughness), and a numerical **substep**. Unlike HGSYSTEM, SLAB does not account for changes in source strength over time; the mass source rate must be specified by the user. For example, if the rate specified is an initial rate for a pressurized release in which the rate decreases with time, SLAB would consequently tend to make conservative predictions.

The SLAB model provides a detailed output file consisting of problem description, intermediate results in the form of instantaneous spatially-averaged cloud properties, and time-averaged volume fraction. Although the computer program has no plotting capabilities, enough information is provided to obtain contour plots of zones that encompass a concentration of interest.

SLAB can perform multiple, consecutive runs of a release scenario with different meteorological inputs. **SLAB** also predicts average concentrations for any specified time period. However, if the duration of the release is much smaller than the averaging time, the dose will be averaged with concentration values of zero.

ED_002700_00005500-00342

ENDNOTES

1. *International Conference and Workshop on Modeling and Mitigating the Consequences of Accidental Releases of Hazardous Materials, May 20-24, 1991, Fairmont Hotel, New Orleans, Louisiana,* American Institute of Chemical Engineers, Center for Chemical Process Safety, New York, 1991, "The HGSYSTEM Dispersion Modelling Package: Development and Predictions,' by Puttock, J.S., K. McFarlane, A. Prothero, P.T. Roberts, F.J. Rees, H.W.M. Wiilox, and Douglas N. Blewitt. (416.5)

2. **Witlox,** H.W.M., K. McFarlane, F.J. Rees, and J.S. Puttock, *Development and Validation of Atmospheric Dispersion Models for Ideal Gases and Hydrogen Fluoride, Part II: HGSYSTEM Program User's Manual,* Shell Research Limited, Thornton Research Centre, Chester England, November 1990. (509)

3. Ermak, Donald L., *User's Manual for SLAB: An Atmospheric Dispersion Model for Denser-than-Air Releases,* University of California, Lawrence Livermore Laboratory, June 1990, Document Number: UCRL-MA-105607. (139.8)

This page intentionally left blank.

ED_002700_00005500-00344

APPENDIX XVII
INPUTS FOR HGSYSTEM AND SLAB MODELS

This appendix presents the inputs that were used in HGSYSTEM and SLAB models for each scenario examined in Chapter 9. Exhibit XVII-1 a, 1b and 1c show the HGSYSTEM inputs. Exhibit XVII-1a presents inputs for scenarios using the HFSPILL and HFPLUME models (scenarios 2 and 4-7). Exhibit XVII-b presents inputs for other scenarios that also use HFSPILL and HFPLUME models (scenarios 8-10 and 13-16). Exhibit XVII-1c shows inputs for scenarios that were modeled using HFSPILL, and HFPLUME or EVAP-HF (scenarios 1, 3, 11 and 12). The first page in each exhibit shows the inputs for the HGSYSTEM subprograms HFSPILL, HFPLUME and/or EVAP-HF. The second page shows the remaining inputs required for the dispersion program HEGADAS, which can be run in either the transient or steady state mode. Note that most of the scenarios were run in the HEGADAS transient mode except for scenarios 10, 11, and 16, that were run in the HEGADAS steady state mode. For each scenario, HF was input as the gas to be modeled. The gas properties listed in the input tables are HF properties that are pre-defined by the HGSYSTEM program. Additionally, "N/A" indicates that a particular input parameter is not required by the subprogram.

The SLAB model can be run for an evaporating pool, a horizontal or vertical jet release, and an instantaneous release. Input parameters similar to HGSYSTEM are required to run each **SLAB** model. The inputs to **SLAB** scenarios 1-16 are presented in Exhibit XVII-2.

ED_002700_00005500-00345

Exhibit XVII-1a
Input for HGSYSTEM Models: HFSPILL and HFPLUME

Input	Model Prog.	Scenario 2: Derailment Empty Rail Car (D Stab.)	Scenario 4: Hose Failure Empty (F Stab.)	Scenario 5: Hose Failure Mitigated (F Stab.)	Scenario 6: Hose Failure Empty (D Stab.)	Scenario 7: Hose Failure Mitigated (D Stab.)
Total Storage Capacity (m^3)	S	79.6	24	24	24	24
Liquid Mass (kg)	S	65,000	18,600	18,600	18,600	18,600
Effective Release Diam. (m)	S,P	0.15	0.05	0.05	0.05	0.05
Water Mass Fraction (%)	S	0.0	0.0	0.0	0.0	0.0
Reservoir Temperature (°C)	S,P	27	30	30	30	30
Reservoir Pressure (atm)	S,P	1.5	6.5	6.5	6.5	6.5
Ambient Pressure (atm)	S,P	1	1	1	1	1
Orifice Height (m)	P	3.00	1.00	1.00	1.00	1.00
Release Discharge Angle	P	-5°	-5°	-5°	-5°	-5°
Last Downwind Displacement (m)	P	1000	1000	1000	1000	1000
Ambient Temperature (°C)	P,H	20	20	20	20	20
Wind Speed (m/s)	P.H	5	1.5	1.5	5	5
Wind Speed Reference Height (m)	P,H	10.0	10.0	10.0	10.0	10.0
Relative Humidity (%)	P,H	50	50	50	50	50
Surface Roughness (m)	P,H	0.03	0.03	0.03	0.03	0.03
Pasquill Stability Level	P,H	D	F	F	D	D

Note: S = HFSPILL P = HFPLUME H = HEGADAS

ED_002700_00005500-00346

Exhibit XVII-1a (continued)
Inputs for HGSYSTEM Models: HEGADAS-S and HEGADAS-T

Input	Model Prog.	Scenario 2: Derailment Empty Rail Car (D Stab.)	Scenario 4: Hose Failure Empty (F Stab.)	Scenario 5: Hose Failure Mitigated (F Stab.)	Scenario 6: Hose Failure Empty (D Stab.)	Scenario 7: Hose Failure Mitigated (D Stab.)
Cloud Data Output Code	T,SS	0	0	0	0	0
Surface Transfer Code	T,SS	3	3	3	3	3
Cloud Meander Averaging Time (sec)	T,SS	840	432	60	432	60
Crosswind Dispersion Coefficient	T,SS	2	2	2	2	2
GAS PROPS.: Molecular Weight (g/mol)	T,SS	20.0	20.0	20.0	20.0	20.0
Specific Heat (J/mol-°C)	T,SS	29.1	29.1	29.1	29.1	29.1
Fraction water pick-up	T,SS	0.0	0.0	0.0	0.0	0.0
Post-Flash Temperature (°C)	T,SS	19.5	19.5	19.5	19.5	19.5
Thermodynamic Model	T,SS	2	2	2	2	2
Cloud Output Step Length (m)	T,SS	100	100	100	100	100
Last Downwind Distance (m)	SS	N/A	N/A	N/A	N/A	N/A
Conc. to Stop Calculations (kg/m^3)	T,SS	5E-6	5E-6	5E-6	5E-6	5E-6
Upper, Lower Concentrations (kg/m^3)	T,SS	5E-5, 5E-6	5E-5, 5E-6	5E-5, 5E-6	5E-5, 5E-6	5E-5, 5E-6
TSTAR observer (minimum) (sec)	T	1000	5000	5000	200	900
TSTAR observer (maximum) (sec)	T	7000	16000	20000	10000	1800

Note: T = HEGADAS-T (Transient) SS = HEGADAS-S (Steady State)

ED_002700_00005500-00347

Exhibit XVII-1 b
inputs for HGSYSTEM Models: HFSPILL and HFPLUME

input	Model Prog.	Scenario 8: Settler Leak-Bottom (F Stab.)	Scenario 9: Settler Leak-Bottom (D Stab.)	Scenario 10: Settler Leak-Bottom-Mitigated (D Stab.)	Scenario 13: Settler Leak-Inlet Pipe (F Stab.)	Scenario 14: Settler Leak-Inlet Pipe (D Stab.)	Scenario 15: Pump Seal Failure (F Stab.)	Scenario 16: Pump Seal Failure (D Stab.)
Total Storage Capacity (m3)	S	163	163	163	24	24	24	24
Liquid Mass (kg)	S	26,000	26,000	26,000	20,000	20,000	18,600	18,600
Effective Release Diameter (m)	S,P	0.05	0.05	0.0158	0.0177	0.0177	0.01	0.01
Water Mass Fraction (%)	S	0.1	0.1	0.1	2.0	2.0	0.0	0.0
Reservoir Temperature (^{o}C)	S,P	40	40	40	40	40	40	40
Reservoir Pressure (atm)	S,P	8.5	8.5	8.5	16	16	7.5	7.5
Ambient Pressure (atm)	S,P	1	1	1	1	1	1	1
Orifice Height (m)	P	1.00	1.00	1.00	1.00	1.00	1.00	1.00
Release Discharge Angie	P	-5°	-5°	0	-5^{0}	-5°	-5°	-5°
Last Downwind Displacement (m)	P	1000	1000	1000	1000	1000	1000	1000
Ambient Temperature (^{o}C)	P,H	20	20	20	20	20	20	20
Wind Speed (m/s)	P,H	1.5	5	5	1.5	5	1.5	5
Wind Speed Reference Height(m)	P,H	10.0	10.0	10.0	10.0	10.0	10.0	10.0
Relative Humidity (%)	P,H	50	50	50	50	50	50	50
Surface Roughness (m)	RH	0.03	0.03	0.03	0.03	0.03	0.03	0.03
Pasquill Stability Level	P,H	F	D	D	F	D	F	D

Note: S = HFSPILL P = HFPLUME H = HEGADAS

ED_002700_00005500-00348

Exhibit XVII-1 b (continued)
inputs for HGSYSTEM Models: HEGADAS-S and HEGADAS-T

input	Model Prog.	Scenario 8: Settler Leak-Bottom (F Stab.)	Scenario 9: Settler Leak-Bottom (D Stab.)	Scenario 10: Settler Leak-Bottom-Mitigated (D Stab.)	Scenario 13: Settler Leak Inlet Pipe (F Stab.)	Scenario 14: Settler Leak Inlet Pipe (D Stab.)	Scenario 15: Pump Seal Failure (F Stab.)	Scenario 16: Pump Seal Failure (D Stab.)
Cloud Data Output Code	T,SS	0	0	0	0	0	0	0
Surface Transfer Code	T,SS	3	3	3	3	3	3	3
Cloud Meander Averaging Time(sec)	T,SS	541	541	541	1200	1200	1200	1200
Crosswind Dispersion Coefficient	T,SS	2	2	2	2	2	2	2
GAS PROPS.: Mol. Weight (g/mol)	T,SS	20.0	20.0	20.0	20.0	20.0	20.0	20.0
Specific Heat (J/mol-^{0}C)	T,SS	29.1	29.1	29.1	29.1	29.1	29.1	29.1
Fraction water pick-up	T,SS	0.0	0.0	0.0	0.0	0.0	0.0	0.0
Thermodynamic Model	T,SS	2	2	2	2	2	2	2
Post-Flash Temperature (^{0}C)	T,SS	19.5	19.5	19.5	19.5	19.5	19.5	19.5
Cloud Output Step Length (m)	T,SS	100	100	100	100	100	100	100
Last Downwind Distance (m)	SS	N/A	N/A	100,000	N/A	N/A	N/A	1.OE+5
Conc. to Stop Calculations (kg/m^3)	T,SS	5E-6	5E-6	5E-6	5E-6	5E-6	5E-6	5E-6
Upper, Lower Concentrations(kg/m^3)	T,SS	5E-5, 5E-6	5E-5, 5E-6	5E-5, 5E-6	5E-5, 5E-6	5E-5, 5E-6	5E-6, 5E-5	5E-5, 5E-6
TSTAR observer (minimum) (sec)	T	5000	200	N/A	7000	500	3500	N/A
TSTAR observer (maximum) (sec)	T	160,000	10,000	N/A	17,000	2500	14000	N/A

Note: T = HEGADAS-T (Transient) SS = HEGADAS-S (Steady State)

ED_002700_00005500-00349

Exhibit XVII-1 c
Inputs for HGSYSTEM Models: HFSPILL and HFPLUME or EVAP-HF

Input		Model Prog.	**Scenario 1:** Vessel Rupture-Bulk Storage (D Stab.)	**Scenario 3:** Derailment 70% HF (D Stab.)	**Scenario 11:** Vessel Leak (D Stab.)	**Scenario 12:** Vessel Leak-Mitigated (D Stab.)
Total Storage Capacity	(m^3)	S	2023	79.6	20.2	20.2
Liquid Mass	(kg)	S	1,858,000	65,000	18,600	18,600
Effective Release Diam.	(m)	S,P	5	0.15	0.06	0.06
Water Mass Fraction	(%)	s	0.0	30	0.0	0.0
Reservoir Temperature	(^{0}C)	S,P	27	27	27.0	27
Reservoir Pressure	(atm)	S,P	1.5	5	1.5	1.5
Ambient Pressure	(atm)	S,P	1	1	1	1
Orifice Height	(m)	P	N/A	N/A	10	10
Release Discharge Angle		P	N/A	N/A	-5°	-5°
Last Downwind Displacement	(m)	P	N/A	N/A	1000	1000
Ambient Temperature	(^{0}C)	P , W	20	20	20	20
Wind Speed	(m/s)	P,E,H	5	5	5	5
Wind Speed Reference Height	(m)	P,H	10.0	10.0	5.0	5.0
Relative Humidity	(%)	P,H	60	50	50	50
Surface Roughness	(m)	P,H	0.03	0.03	0.03	0.03
Pasquill Stability Level		P,H	D	D	D	D
Model Type		E	3	3	N/A	N/A
Formula		E	1	1	1	1
Spilled Liquid Temperature	(^{0}C)	E	20	27	N/A	N/A
Minimum Pool Height	(m)	E	0.002	0.001	N/A	N/A
Timestep, Maximum Time	(sec)	E	60, 36000	50, 3600	N/A	N/A
Min Evap. Flux, Min Evap. Rate (kg/m^2-s, kg/s)		E	0.01, 0.1	0.01, 0.1	N/A	N/A

Note: S = HFSPILL P = HFPLUME E = EVAP H = HEGADAS

ED_002700_00005500-00350

Exhibit XVII-1 c (continued)
Inputs for HGSYSTEM Models: HEGADAS-S and HEGADAS-T

Input	Model Prog.	**Scenario 1:** Vessel Rupture-Bulk Storage (D Stab.)	**Scenario 3:** Derailment 70% HF (D Stab.)	**Scenario 11:** Vessel Leak (D Stab.)	**Scenario 12:** Vessel Leak-Mitigated (D Stab.)
Cloud Data Output Code	T,SS	0	0	0	0
Surface Transfer Code	T,SS	3	3	3	3
Ambient Temperature Height (m)	TSS	N/A	N/A	2.20	2.20
Cloud Meander Averaging Time (sec)	T,SS	600	840	1200	180
Crosswind Dispersion Coefficient	T,SS	2	2	2	2
GAS PROPS.: Molecular Weight (g/mol)	T,SS	20.01	20.01	20.0	20.0
Specific Heat (J/mol-^{0}C)	T,SS	29.0	29.0	29.1	29.1
Fraction water pick-up	T,SS	0.0	0.0	0.0	0.0
Thermodynamic Model	T,SS	2	2	2	2
Post-Flash Temperature (^{0}C)	T,SS	N/A	N/A	19.5	19.5
Cloud Output Step Length (m)	TSS	200	50	100	100
Last Downwind Distance (m)	SS	N/A	N/A	101,000	N/A
Conc. to Stop Calculations (kg/m^3)	T,SS	5E-6	5E-6	5E-6	5E-6
Upper, Lower Concentrations (kg/m^3)	TSS	5E-5, 5E-6	5E-5, 5E-6	5E-5, 5E-6	5E-5, 5E-6
TSTAR observer (minimum) (sec)	T	5000	400	N/A	100
TSTAR observer (maximum) (sec)	T	25000	900	N/A	4000

Note: T = HEGADAS-T (Transient) SS = HEGADAS-S (Steady State)

ED_002700_00005500-00351

Exhibit XVII-2
Inputs for SLAB Models

Input		Scenario 1: Vessel Rupture-Bulk Storage (D Stab.)	Scenario 2: Derailment Empty Rail Car (D Stab.)	Scenario 3: Derailment 70% HF (D Stab.)
Spill Source Type	(see Note below)	1	2	1
Numerical Substep		1	1	1
Molecular Weight	(kg/mol)	0.020006	0.020006	0.020006
Vapor Heat Capacity (const.pr.)	(j/kg-K)	1450	1450	1450
Boiling Point Temperature	(°C)	292.67	292.67	292.67
Liquid Mass Fraction		0.0	0.94	0.0
Heat of Vaporization	(j/kg)	373200	373200	373200
Liquid Heat Capacity	(j/kg-K)	2528	2528	2528
Liquid Source Density	(kg/m^3)	957	957	957
Saturation Pressure Constant, spb		-1	3404.51	-1
Saturation Pressure Constant, sbc		0	15.06	0
Temperature of Source Gas	(°C)	292.67	292.67	292.67
Mass Source Rate	(kg/s)	720	77.4	2.5
Source Area	(m^2)	235900	0.0177	2827
Continuous Source Duration	(sec)	1200	841	1200
Instantaneous Source Mass	(kg)	0	0	0
Source Height	(m)	0	3	0
Concentration Averaging Time	(sec)	1800	1800	1800
Maximum Downwind Distance	(m)	35000	40000	35000
Conc. Measurement Height, zp(i), i=1,4	(m)	0	0	0
Surface Roughness Height	(m)	0.03	0.03	0.03
Ambient Measurement Height	(m)	10.0	10.0	10.0
Ambient Wind Speed	(m/s)	5.0	5.0	5.0
Ambient Temperature	(°C)	293.0	292.8	292.8
Relative Humidity	(%)	50	50	50
Atmospheric Stability Class Value		4	4	4

Note: 1 = Evaporating Pool 2 = Horizontal Jet Release 3 = Vertical Jet Release 4 = Instantaneous Release

Exhibit XVII-2
Inputs for SLAB Models
(continued)

Input		Scenario 4: Hose Failure Empty (F Stab.)	Scenario 5: Hose Failure Mitigated (F Stab.)	Scenario 6: Hose Failure Empty (D Stab.)	Scenario 7: Hose Failure Mitigated (D Stab.)
Spill Source Type	(see Note below)	2	2	2	2
Numerical Substep		1	1	1	1
Molecular Weight	(kg/mol)	0.020006	0.020006	0.020006	0.020006
Vapor Heat Capacity (const.pr.)	(j/kg-K)	1450	1450	1450	1450
Boiling Point Temperature	(^oK)	292.67	292.67	292.67	292.67
Liquid Mass Fraction		0.918	0.918	0.918	0.918
Heat of Vaporization	(j/kg)	373200	373200	373200	373200
Liquid Heat Capacity	(j/kg-K)	2528	2528	2528	2528
Liquid Source Density	(kg/m^3)	957	957	957	957
Saturation Pressure Constant, spb		3404.51	3404.51	3404.51	3404.51
Saturation Pressure Constant, sbc		15.06	15.06	15.06	15.06
Temperature of Source Gas	(^oK)	292.67	292.67	292.67	292.67
Mass Source Rate	(kg/s)	43.3	43.3	43.3	43.3
Source Area	(m^2)	0.002	0.002	0.002	0.002
Continuous Source Duration	(sec)	432	60	432	60
Instantaneous Source Mass	(kg)	0	0	0	0
Source Height	(m)	1	1	1	1
Concentration Averaging Time	(sec)	1800	1800	1800	1800
Maximum Downwind Distance	(m)	37000	30000	30000	35000
Conc. Measurement Height, zp(i), i=1,4	(m)	0	0	0	0
Surface Roughness Height	(m)	0.03	0.03	0.03	0.03
Ambient Measurement Height	(m)	10.0	10.0	10.0	10.0
Ambient Wind Speed	(m/s)	1.5	1.5	5.0	5.0
Ambient Temperature	(^oK)	292.8	292.8	292.8	292.8
Relative Humidity	(%)	50	50	50	50
Atmospheric Stability Class Value		6	6	4	4

Note: 1 = Evaporating Pool 2 = Horizontal Jet Release 3 = Vertical Jet Release 4 = Instantaneous Release

Exhibit Xvii-2
inputs for SLAB Models
(continued)

Input	Scenario 8: Settler Leak-Bottom (F Stab.)	Scenario 9: Settler Leak-Bottom (D Stab.)	Scenario 10: Settler Leak-Bottom Mitigated (D Stab.)	Scenario 11: Vessel Leak (D Stab.)	Scenario 12: Vessel Leak Mitigated (D Stab.)
Spill Source Type (see Note below)	2	2	2	2	2
Numerical Substep	1	1	1	1	1
Molecular Weight (g/mol)	0.020006	0.020006	0.020006	0.020006	0.020006
Vapor Heat Capacity (const.pr.) (j/kg-K)	1450	1450	1450	1450	1450
Boiling Point Temperature (°C)	292.67	292.67	292.67	292.67	292.67
Liquid Mass Fraction	0.84	0.84	0.84	0.94	0.94
Heat of Vaporization (j/kg)	373200	373200	373200	373200	373200
Liquid Heat Capacity (j/kg-K)	2528	2528	2528	2528	2528
Liquid Source Density (kg/m^3)	957	957	957	957	957
Saturation Pressure Constant, spb	3404.51	3404.51	3404.51	3404.51	3404.51
Saturation Pressure Constant, sbc	15.06	15.06	15.06	15.06	15.06
Temperature of Source Gas (°C)	292.67	292.67	292.67	292.67	292.67
Mass Source Rate (kg/s)	49.5	49.5	4.95	12.40	12.40
Source Area (m^2)	0.002	0.002	0.002	0.0028	0.0028
Continuous Source Duration (sec)	541	541	541	1200	180
Instantaneous Source Mass (kg)	0	0	0	0	0
Source Height (m)	1	1	1	10	10
Concentration Averaging Time (sec)	1800	1800	1800	1800	1800
Maximum Downwind Distance (m)	40000	40000	40000	40000	40000
Conc. Measurement Height, zp(i), i=1,4(m)	0	0	0	0	0
Surface Roughness Height (m)	0.03	0.03	0.03	0.03	0.03
Ambient Measurement Height (m)	10.0	10.0	10.0	10.0	10.0
Ambient Wind Speed (m/s)	1.5	5.0	5.0	5.0	5.0
Ambient Temperature (°C)	292.8	292.8	292.8	292.8	292.8
Relative Humidity (%)	50	50	50	50	50
Atmospheric Stability Class Value	6	4	4	4	4

Note: 1 = Evaporating Pool 2 = Horizontal Jet Release 3 = Vertical Jet Release 4 = instantaneous Release

Exhibit Xvii-2
inputs for SLAB Models
(continued)

Input		Scenario 13: Settler Leak-Inlet Pipe (F Stab.)	Scenario 14: Settler Leak-Inlet Pipe (D Stab.)	Scenario 15: Pump Seal Failure (F Stab.)	Scenario 16: Pump Seal Failure (D Stab.)
Spill Source Type	(see Note below)	2	2	2	2
Numerical Substep		1	1	1	1
Molecular Weight	(kg/mol)	0.020006	0.020006	0.020006	0.020006
Vapor Heat Capacity (const.pr.)	(j/kg-K)	1450	1450	1450	1450
Boiling Point Temperature	(^oK)	292.67	292.67	292.67	292.67
Liquid Mass Fraction		0.84	0.84	0.84	0.84
Heat of Vaporization	(j/kg)	373200	373200	373200	373200
Liquid Heat Capacity	(j/kg-K)	2528	2528	2528	2528
Liquid Source Density	(kg/m^3)	957	957	957	957
Saturation Pressure Constant, spb		3404.51	3404.51	3404.51	3404.51
Saturation Pressure Constant, sbc		15.06	15.06	15.06	15.06
Temperature of Source Gas	(^oK)	292.67	292.67	292.67	292.67
Mass Source Rate	(kg/s)	9.56	9.56	1.8	1.8
Source Area	(m^2)	0.0025	0.0025	8E-5	8E-5
Continuous Source Duration	(sec)	1200	1200	1200	1200
Instantaneous Source Mass	(kg)	0	0	0	0
Source Height	(m)	1	1	1	1
Concentration Averaging Time	(sec)	1800	1800	1800	1800
Maximum Downwind Distance	(m)	40000	40000	30000	30000
Conc. Measurement Height, zp(i), i=1,4	(m)	0	0	0	0
Surface Roughness Height	(m)	0.03	0.03	0.03	0.03
Ambient Measurement Height	(m)	10.0	10.0	10.0	10.0
Ambient Wind Speed	(m/s)	1.5	5.0	1.5	5.0
Ambient Temperature	(^oK)	292.8	292.8	292.8	292.8
Relative Humidity	(%)	50	50	50	50
Atmospheric Stability Class Value		6	4	6	4

Note: 1 = Evaporating Pool 2 = Horizontal Jet Release 3 = Vertical Jet Release 4 = Instantaneous Release

BIBLIOGRAPHY

In gathering data and information for this report, an extensive library of references and source material was compiled. Although many of these sources were not cited directly in the report, they are referenced in this bibliography for anyone seeking additional information on various topics. In an attempt to group the sources by similar topics, they are presented by chapter in the HF report. Within these chapter headings, the references are arranged in alphabetical order.

ED_002700_00005500-00356

Chapter 1

ICF Inc., *Preliminary Report: Background Information on Hydrogen Fluoride,* Fairfax, VA, July, 24, 1991. (380)

National Petroleum Refiners Association, 'EPA Launches HF Study,' *Washington Bulletin,* Washington, **D.C.,** October 25, 1991. (139.505)

ED_002700_00005500-00357

Chapter 2

Allied-Signal, *Recommended Medical Treatment for Hydrofluoric Acid Exposure,* The HF Products Group, Morristown, NJ, 1991. (422.5)

Beal, John W., "Wind-Blown Acid Mist Blamed for Damaged Cars, Airplanes," *Kansas City Star,* March I, 1976. (53)

Caldwell, Jean, "Fumes in Springfield Roust Thousands Again," The *Boston* Globe, June 19, p 1. (77)

Canadian Centre for Occupational Health and Safety (CCOHS), *Hydrogen Fluoride,* Hamilton, Ontario, April 30, 1985. (265)

Citizens Clearinghouse for Hazardous Wastes, Inc., *Environmental Health Monthly,* Volume 4, Number 5, Falls Church, VA, February 1992. (139.515)

Comite Technique Europeen Du Fluor, Medical Sub Group: A) *Advice for Hydrofluoric Acid Intoxication,* Document Number: STS 89/70, B) *Recommandations en Cas d'Accident a l'Acide Nuorhydrique,* Document Number: STS 89/69. (130.15 A,B)

Du Pont Chemicals Literature Search on Hydrogen Fluoride, November 10, 1989. (138.5)

Dayal, Hari H., et al, "A Community-Based Epidemiologic Study of Health Sequelae of Exposure to Hydrofluoric Acid," *Anna/s of Epidemiology,* Volume 2, Number 3, May 1992, pp 213-230. (134.8)

Hydrogen Fluoride Task Force of the South Coast Air Quality Management District, *Health Effects Due to Hydrogen Fluoride Inhalation: A Literature Review,* March 1989. (148)

Kaiser, G.D., Science Applications International Corporation, and Adam Hasen, *Hydrogen Fluoride Storage and* Use, (comments on various materials that were distributed by the South Coast Air Quality Management District while it was preparing Rule 1410), March 1991. (130.2)

Energy Safety Council, "Lethal Chemical Threat to Millions of Americans Exposed by New Organization Focusing on Energy Hazards,' *Energy Safety News,* January, 1992. (293.2)

Lifelines: OCAW Health and Safety News, "OCAW Debates Hydrogen Fluoride Safety,' May-June 1989, p 15. (367)

McFarland, Mack, "Investigations of the Environmental Acceptability of Fluorocarbon Alternatives to Chlorofluorocarbons," *Proceedings of the National Academy of Sciences,* Volume 89, pp 807-811, February 1992. (328.649)

Miliar, Fred, Press Release: *Tens of Thousands At Peril From Hydrogen Fluoride at Texas City Refineries; New Research Data nor Shared with Populations At Risk,* Environmental Policy Institute, November 19, 1987. (469)

Moran, Kevin, "Hospital Staff Rallied to Code Yellow,' *Houston Chronicle,* November 1987.(342.5)

Public Inquiry Into the Proposed Northwick Village Development, *Applications by Aldersgate Developments Ltd to Castle Point District Council,* Proof of Evidence Submitted by the Health and Safety Executive, October 1990. (374)

Sax, N. Irving and Richard J. Lewis, Sr., *Dangerous Properties of Industrial Materials,* Volume 3, Van Nostrand Reinhold, New York, pp 1906-1907. (427)

Stein, George, "Assembly Targets South Bay in Study of Chemical Risks," Los *Angeles Times* March 17, 1989. (463.2)

Trevino, M.A., G.H. Herrmann, and William L. Sprout, "Treatment of Severe Hydrofluoric Acid Exposures," *Journal of Occupational Medicine,* Volume 25, Number 12, December 1983, p 861-863. (485.5)

Turner, R.M., and S. Fairhurst, *Assessment of the Toxicity of Major Hazard Substances,* England. (489.6)

U.S. Department of Health and Human Services, *NIOSH Pocket Guide to Chemical Hazards,* Centers for Disease Control, National Institute for Occupational Safety and Health, Washington, D.C., June 1990. (362)

U.S. Environmental Protection Agency, *Integrated Risk Information System (/R/S), Fluorine,* August 1, 1989. (283)

U.S. Environmental Protection Agency, *Summary Review of Health Effects Associated with Hydrogen Fluoride and Related Compounds,* Health issue Assessment, Document Number: EPA/600/8-89/002F, December 1988. (467.5)

U.S. Nuclear Regulatory Commission, *Assessment of the Public Health Impact from the Accidental Release of UF6 at the Sequoyah Fuels Corporation Facility at Gore, Oklahoma (Appendices),* Washington, D.C., March 1986. (492)

Valentine, Rudolph, *Acute Inhalation Toxicity of Hydrogen Fluoride in Rats,* Du Pont, Newark, DE, August 14, 1990, Document Number: HLR 365-90. (13)

Weiss, *G.,* ed., *Hazardous Chemicals Data Book,* Noyes Data Corporation, Park Ridge, N.J., 1985, pp 568, 573. (505)

Wing, Jessie, S., Lee M. Sanderson, Jean D. Brender, Dennis M. Perrotta, Richard A. Beauchamp, "Acute Health Effects in a Community After a Release of Hydrofiuoric Acid,' *Archives of Environmental Health,* Volume 46, Number 3, May/June 1991. (507)

ED_002700_00005500-00359

Chapter 3

Allied-Signal, Inc., *North American HF Industry Overview,* The HF-Products Group, Morristown, NJ. **(363)**

Aviation Week and Space Technology, "Alpha Missile Defense Laser Is Fired for the First Time,' April 17, 1989, pp 23-24. (10.42)

Bernhardt, Steven H., *HF Value to Society, Fluorocarbons Manufacture,* Du Pont Chemicals, November 8, 1991. (55)

Chemical and Engineering News, 'Production by the U.S. Chemical Industry, Little Change in Chemical Output Last Year," June 24, 1991, pp 30-81. (372.7)

Chemical and Engineering News, "Gasoline Alkylation Process to be Commercialized,' February 10, 1992, p 24. (141)

Chemical Engineering Progress, "CFC Phase-Out to Benefit Hydrofluoric Acid Makers," June 1990, p 8.

Chemical Marketing Reporter, "CFC Substitute Race; ICI Announces Plants," November 28, 1988, p 3. **(90)**

Chemical Marketing Reporter, July 30, 1990, p 37. (105)

Chemical Marketing Reporter, "Hydrofiuoric Acid Demand Will Increase to 480,000 Tons From 375,000 Tons in 1972,' February 5, 1973, p 91. (195)

Chemical Marketing Reporter, "Hydrogen Fluoride Looks in Good Shape for '88; a Maybe in '89; March 7, 1988, p 7. (230)

Cunningham, Larry D., *Columbium (Niobium) and Tantalum,* U.S. Department of the Interior, Bureau of Mines, Annual Report, 1990. (294.3b)

Environmental Policy Institute, *Districts in Which Refining Facilities Utilizing Hydrofluoric Acid are Located and U.S. Refineries Using HF,* Washington, D.C. (135.5)

General Chemical Corporation, *Bay Point Plant,* Brochure, Suisun Bay, PA, April, 1992. (141.58)

J.J. Kelley & Associates, *Hazardous Materials Guide, Shipping, Materials Handling and Transportation,* Inc., Neenan, WI, 1982. (147.7)

Lawler, Gloria M., ed., *Chemical Origins and Markers,* Fifth Edition, Chemical Information Services, Menlo Park, CA, 1977. (292)

Morse, David E., *Minerals Yearbook - Fluorspar,* U.S. Department of the Interior, Bureau of Mines, Washington, D.C., 1988. (345)

National Fire Protection Association, *NFPA* 49: *Hazardous Chemicals Data,* 1984. (361)

National Library of Medicine, *Hazardous Substances* ***Data*** *Bank,* (On-Line Database), 'Hydrofiuoric Acid,' July 15, 1992. (361.3)

"Preparation of Hydrogen Fluoride," U.S. *Parent No. 3,102,787.*

South Coast Air Quality Management District, A) *Hydrofluoric Acid Inventory in the District,* B) *Businesses that Use Hydrofluoric Acid or Hydrogen Fluoride, C) HF Inspection Survey,* D) *Phone numbers of Semiconductor Producers/Distributors,* E) *Semiconductor Fabricators in SCAQMD,* F) *Mailing List for Proposed Rule 1164, G) Mailing List for Proposed Rule 1410. (443* A-G)

South Coast Air Quality Management District Board, *Recommendations on the Potential Hazards of Hydrogen Fluoride Transportation, Storage, and Use,* El Monte, CA, April *4,* 1990. *(442.5)*

"Survey of Operating Refineries in the U.S. (State Capacities as of January, 1, 1988)," *Oil and Gas Journal,* March 21, 1988. (468)

Thrash, Lou Ann, "Worldwide Refining," *Oil and Gas Journal,* December 31, 1990, p 84. (473)

Will, Ray, R. Willhalm, and S. Mori, SRI International, *Chemical Economics Handbook Product Review: Fluorine Compounds,* Preliminary Draft, Menlo Park, CA, May 20, 1992. (102)

ED_002700_00005500-00361

Chapter 4

Ale, B.J.M., *The Implementation of an External Safety Policy in the Netherlands,* Ministry of Housing, Physical Planning, and Environment, the Netherlands. (10.15)

Amendola, A. and S. Contini, *Community Documentation Center on Industrial Risk, National Approaches to the Safety Report a Comparison,* Joint Research Centre, Commission of the European Communities, January 1991. (10.45)

California State Assembly, "Hydrogen Fluoride Chemical Plants; *Chapter 6.3, Division 20 of the Health and Safety Code,* Sacramento, CA, February 12, 1990. (10.7)

The Chemical Engineer, "HF Guidelines Change," June 25, 1992, p 7. (76.3)

(UNEP) IRPTC PC database, Data on International Regulations on HF, Document Number: 17.01 Legal, 1965-1990, pp 1-23. (133.5)

Contra Costa County Health Services Department, *Hazardous Materials Release Response and Inventory Law, Business Plan 3/92,* General Chemical Corporation, Pittsburg, CA. (141.5D)

Gladstone, Mark, "Bill to Restrict Refinery Chemical Shelved,' *Los Angeles Times,* April 4, 1990, p B8. (142)

Gladstone, Mark, "Tucker's Bill on Hazardous Acid Dies in Committee,' *Los Angeles Times,* April 5, 1990. (143)

Hatch, George, "Foes in Acid issue Trade Jabs, File Arguments," *Los Angeles Times,* December 29, 1989, p B3. (147.3)

*Hazardous Materials Regulations," 49 *CFR 171-180.* (156.5)

Martin, Hugo, "Torrance Council Defends Its Methods in Battle with Mobil Refinery," *Los Angeles Times,* April 14, 1989, p 8. (327)

McGuire, S.A., *A Regulatory Analysis on Emergency Preparedness of Fuel Cycle and Other Radioactive Material Licensees,* Draft Report for Comment, U.S. Nuclear Regulatory Commission, June 1985. (329)

Mitchell, Jeff, "Tucker Bid to Ban HF Acid Killed in State Legislature," *Easy Reader,* April 1991. (333)

"Mobil Settles in California on Hydrofluoric Acid Use," *Wall Street Journal,* October 1990. (337)

New Jersey Department of Environmental Protection and Energy, *Cleanup Standards for Contaminated Sires,* Site Remediation Program, Document Number (Proposed New Rule): N.J.A.C. 7:26D, June 2, 1991. (570)

Promoting Safer Highway Routing of Ultrahazardous Cargoes: DO7 Oversight, Hearings Before a Subcommittee on Government Operations House of Representatives, One Hundredth Congress, October 14 and 19, 1987. (373)

Public Law 101-549, Clean Air Act Amendments of 1990, November 15, 1990, p 104 STAT.2560. (375)

Rabin, Jeffrey L., "Drive to Ban Mobil Acid Use Launched," *Los Angeles Times,* April 6, 1989, p.8. (421.1)

Rabin, Jeffrey L., "Councilman's Petition Drive to Target Acid at Oil Refinery," *Los Angeles Times,* December 15, 1986, p 12. (420.7)

Rabin, Jeffrey L., "Mobil Lobbies More as Pressure Builds in Torrance," *Los Angeles Times,* March 24, 1989, p 8. (421.2)

Radcliffe, Jim, "AQMD Staff May Urge Ban of Deadly Chemical," *The Daily Breeze,* Torrance, CA, January 12, 1990. (421.9)

Radcliffe, Jim, "Report on Chemical Draws Torrance Ire," *The Daily Breeze,* Torrance, CA, January 10, 1990. (421.95)

Robak, Warren, "Chemical Ban Gets AQMD Nod," *The Daily Breeze,* Torrance, CA, April 7, 1990. *(424.4)*

Robak, Warren, "House Panel Accepts Toxics Amendment," *The Daily Breeze,* Torrance, CA, p A3. *(424.55)*

Robak, Warren, "Proposal Extends Refinery Acid Use," *The Daily Breeze,* Torrance, CA, February 27, 1991. (424.6)

Robak, Warren, "Study Tells Plant How to Cut Risk, "The *Daily Breeze,* Torrance, CA, January 12, 1990., p. Al. (424.65)

South Coast Management District, *Hydrogen Fluoride Storage and Use, Rule 1410,* CA, April 5, 1991. *(250)*

Stein, George, "600 Neighbors of Oil Refinery in Torrance File Suit Against Mobil," *Los Angeles Times,* February 14, 1990, p B3. (463.1)

Stein, George, "AQMD Votes to Ban Hydrofluoric Acid," *Los Angeles Times,* April 7, 1990. (463.15)

Sternberg, Ken, "Use of Hydrofluoric Acid Comes Under the Gun in California," *Chemical Week,* October 31, 1990. (465)

Sweeney, James P., "Panel Kills Chemical Bill, Hydrogen Fluoride Was Targeted," *The Daily Breeze,* Torrance, CA, p A3. (468.5)

Ultramar Refining, *Regulatory Use of Risk-Based Standards and Techniques,* Wilmington, CA, May 1991. Prepared by Science Applications International Corporation. (421)

ED_002700_00005500-00363

Chapter 5

American Institute of Chemical Engineers, *Spring National Meeting,* Houston, TX, April II, 1991, "Alkylation's Role in Reformulated Gasoline,' by Kenneth R. Masters, Stratco, Inc. (10.4)

"Annual Refining Survey," *Oil & Gas Journal,* March 18, 1991, pp 85-105. (30)

Encyclopedia of Science and Technology, Sixth Edition, Volume 7, McGraw Hill Book Company, New York, 1987, pp 580-583. (328.9)

Hammershalmb, H.U. and B.R. Shah, "Trends in HF Alkylation," *Hydrocarbon Processing,* June 1985, p 73-76. (147.25)

"HF Alkylation," *Hydrocarbon Processing,* September 1974, p 207. (149)

"HF Alkylation," *Hydrocarbon Processing,* September 1984, p 124. (149.1)

"HF Alkylation draws Safety and Process Questions," *Oil and Gas Journal,* June 24, 1991, p 48-54. (149.3)

Hydrocarbon Processing, "Alkylation," September 1986, p 101. (10.3)

High-Octane Gasoline Requires High-Qualify Alkylate, Panel Discussion April 30, 1990, pp 62-64. (158)

Lee, Patrick, 'Are Refineries Unsafe?," *Los Angeles Times. (293)*

Masters, Kenneth R., *Alkylation's Contribution to Low RVP, Clear Pool Octane,* Stratco, Inc., Leawood, KS, 1990. (328.6)

Mark, Herman F., Donald F. Othmer, Charles G. Overberger, and Glenn T. Seaborg, eds., *Kirk-Orhmer Encyclopedia of Chemical Technology,* Third Edition, Volume 2, John Wiley and Sons, New York, 1978. (284.5)

Myers, Philip, Krishna Mudan, and Henry Hachmuth, *The Risks of HF Sulfuric Acid Alkylation*, Journal article, Phillips Petroleum and Technica, 1990. (357)

'Refiners Discuss HF Alkylation Process and Issues,' *Oil and Gas Journal,* April 6, 1992. (421.97)

Rogers, W.R. and Muller, K., "Hydrofluoric Acid Manufacture," *Chemical Engineering* Progress, Volume 59, Number 5, May 1963. (425)

Vista Chemical Company, *Chloroparaffin* vs. *HF Processes for LAB,* Houston, TX, April 1992. (497.7)

Vora, Bipin V. and Charles P. Luebke, "Process Hydrogenates Unwanted Diolefins and Acetylenes,' *Oil and Gas Journal,* December 5, 1988, p 40. (499)

Chapter 6

American Petroleum Institute, "Safe Operation of Hydrofluoric Acid Alkylation Units," *API Recommended Practice* 757, First Edition, June 1992, Washington, D.C. 20005. (10.6)

American Petroleum Institute, *Process Hazards Management,* Washington, D.C. (19.97)

American Petroleum Institute, "Management of Process Hazards," *API Recommended Practice 750,* First Edition, January 1990, Washington, D.C. (19.99)

BP CIRRUS, An Integrated Consequence Modelling Package, User Guide, Corporate Safety Services, BP International Limited, January 1991. (51.5)

BP Alliance Refinery Safe Practices, Procedure No. 23, "Handling of Hydrofluoric Acid (HF)," February 13, 1986, and *Procedure* No. 77, "Minimum Safe Dress," December 17, 1991. (73)

BP, *The Use and Value of Quantified Risk Assessment Within the BP Group,* Corporate Safety Services, Document (GSC Report) Number: 04-90-0005, March 1990. (497.5)

BP International, Ltd., "The Use and Value of Quantified Risk Assessment Within the BP Group," *Corporate Safety Services Guidance Note,* London, September 1991. (497.6)

BP International, Ltd., "Concept Safety Evaluations," *Corporate Safety Services Guidance Note,* London, September 1991. (130.3)

BP International, Ltd., *Consequence Modelling in Design, Emergency Planning, and Quantified Risk Assessment,* Corporate Safety Services, London, September 1991. (130.5)

Comite Technique Europeen Du Fluor (European Fluorine Technical Committee), Working Group Storage, Transport, Safety, *Twenty-three Assorted Recommended Practices for Handling and Transporting HF Safely,* CEFIC, CTEF-250, Brussels, (130.16A-X)

The Development of Acceptability Criteria for the BP Group,: A Corporate Services Safety Discussion Document, July 1990. (135.3)

Du Pont, *Off-Site Consequence Analysis,* Antioch Works, Contra Costa County, CA, September 30, 1991. (11)

Environmental Policy Institute, *Statement by Dr. Fred Millar Before the California Assembly Committee on Safety in the Workplace,* Carson, CA, October 19, 1988. (463)

Hatch, George, and George Stein, "Ban of Toxic Chemical Rejected in Draft Report; Safety: Despite Significant Public Health Risks, Draft Report To AQMD Calls for Improved Safeguards at Plants Rather Than Banning Use of Hydrogen Fluoride,' *Los Angeles Times,* December 29, 1989, p.B3. (147.5)

Kansas City Star, "Refinery Replaces Pipe Fittings To Guard Against Acid Leaks," March 3, 1976. (422)

Mobil Oil Corporation Torrance Refinery, *Hydrofluoric Acid Alkylation Unit Risk Management and Prevention Program Report,* Torrance, CA, April 1991. (187)

ED_002700_00005500-00365

Official Journal of the European Communities, "Council Directive of 24 June 1982 on the Major-Accident Hazards of Certain Industrial Activities (82/501/EEC)," Volume 25, Number L230, August 5, 1982, pp 1-18. (530a)

Powerine Oil Company, *Hydrogen Fluoride Alkylation Unit, Santa Fe Springs Refinery, Risk Management and Prevention Program,* Santa Fe Springs, CA, May II, 1990. Prepared by Radian Corporation. (424.31)

Rabin, Jeffrey L., "Mobil Sees Little Risk in Acid Use at Refinery," *Los Angeles Times,* March 17, 1989, p 8. (421.3)

Rabin, Jeffrey L., "Torrance Rejects Consultants' Report on Mobil as 'Flawed'," *Los Angeles Times,* January 19, 1989, p 8. (421.5)

Risk Management Plans, HazOp, Safety Evaluations, etc., for various anonymous HF Refining/Alkylation facilities. (424.34D-J)

Robak, Warren, "AQMD Says Acid Storage Requires New Procedures," *The Daily Breeze,* Torrance, CA, December 28, 1989, p Al, (424.35)

Robak, Warren, "Expert Tells of Chemical Plant Hazard," *The Daily Breeze,* Torrance, CA, March 22, 1988, p A3. (424.5)

The 6th International Symposium, Loss Prevention and Safety Promorion in the Process Industries, Oslo, June 1989, 'The Use of Cost Benefit Analysis in Evaluating the Acceptability of Industrial Risks: An Illustrative Case Study," Fleishman, A.B., and M.S. Hogh. (139.95)

Stein, George and Hugo Martin, "Safety Report Criticizes Mobil Oil Co. Refinery," Los *Angeles Times,* January 1, 1989. (464.5)

U.S. Environmental Protection Agency, *Technical Guidance for Hazards Analysis, Emergency Planning for Extremely Hazardous Substances,* December 1987. (489.95)

U.S. Environmental Protection Agency, *Chemical Safely Audit Profile,* British Petroleum Company, Ferndale, WA, March 19-23, 1990. (116.2)

U.S. Environmental Protection Agency, *Chemical Safety Audit Profile,* Phillips 66 Company Woods Cross Petroleum, West Bountiful, UT, May 2-4, 1989. (116.4)

U.S. Environmental Protection Agency, *Chemical Safety Audit Profile,* Ultramar, Incorporated, Wilmington, CA, April 17, 1990. (116.6)

Ultramar, *Alky Unit and HF Acid General Safety, Chemical Handling,* October 15, 1991. (10.2)

Ultramar Inc., *Quantitative Risk Assessment of the HF Alkylation Unit,* Executive Summary, Wilmington, CA, November 1991. (417)

Ultramar Refining, *HF Alkylation Unit Risk Management and Prevention Program and Related Studies and Activities,* Presentation to the U.S. Environmental Protection Agency, December 16, 1991. Prepared by Science Applications International Corporation. (149.5)

Chapter 7

Blewitt, Doug, N., "Design of Water Spray Mitigation Systems for Amoco HF Alkylation Units.' (56)

Blewitt, D.N., J.F. Yohn, R.P. Koopman, T.C. Brown, W.J. Hague, *Effectiveness of Water Sprays on* Mitigating Anhydrous Hydrofluoric Acid Releases, International Conference on Cloud Modeling. **(70)**

Du Pont Chemicals, *EPA - Du Pont Meeting, HF Clean Air Act Study.* Includes agenda, notes on Du Pont's HF Philosophy, notes on Process Hazards Management System, Advanced Modeling of Accidental HF Release Scenarios, Equipment failure at Quimica **Fluor** - Matamoros Plant, HF Safety. (137)

Fthenakis, Vasilis M., 'The Feasibility of Controlling Unconfined Releases of Toxic Gases By Liquid Spraying," *Chemical Engineering Comm.,* Volume 83, 1989, pp 173-1 89. (139.64)

General Chemical Corporation, Bay Point Works - Pittsburg, California, *Hazardous Materials Emergency Action Plan,* April 16, 1992. (141.5A)

General Chemical Corporation, *Bay Point Off-Site Consequence Analysis,* Engineering and Research, Inc., pp 844. (141.5C)

Oil and Gas Journal, 'Studies Cover HF Spills and Mitigation," October 17, 1988, pp 58-62. (467)

Prugh, Richard W., ***The** Controlled Dispersion of Liquid Spill and Vapor Emission Incidents by Water Spray, Effectiveness of Water Sprays,* Hazard Reduction Engineering, Glen Mills, PA, June 12, 1987. (131)

Robak, Warren, "Study: Water Best Weapon in Deadly Chemical Leak," ***The** Daily Breeze,* Torrance, CA, August 21, 1989, p Al. (424.7)

Schatz, K.W. and R.P. Koopman, "Water Spray Mitigation of Hydrofluoric Acid Releases," *Journal of Loss Prevention in **the** Process Industries,* Volume 3, April 1990, pp 222-243. (436)

South Coast Air Quality Management District, *On-Line Leak Detectors Link AQMD **to** Hydrogen Fluoride Sires,* Diamond Bar, CA, February 4, 1992. (442)

Stein, George, "Refineries Lack Means to Handle Corrosive Acid Leaks, Report Says," *Los Angeles Times,* May 6, 1989. (464)

Ultramar, *Multi-Agency Training of Response Personnel.* Prepared by Kusz, Michael R. and James R. Jeter, Union Pacific Resources Co., Wilmington, CA. (290.5)

Wade, Robert *C., HF Mitigation Strategies at Amoco's Texas City Alkylation Unit,* Amoco Oil Company, Chicago, IL. (499.5)

Ward, John, SARA ***Title III*** Facility *Emergency Response Handbook,* BP Oil Company, **Markus** Hook Refinery, Marcus Hook, PA. (499.7)

Chapter 6

"Acid Leak Under Lens at Phillips," *The Kansan,* June 7, 1978. (03)

Applebome, Peter, "Acid Leak in Texas Leaves a Residue of Questions," New *York Times,* December 20, 1987, p 30. (35)

ARIP Database Event Summary, Hydrogen Fluoride, May 22, 1991. (40)

Bell, T.E., "Evacuees Stoic Over Bad News But Still Longing For Showers," *Houston Chronic/e. (54)*

"Blast in Cincinnati Kills at Least 1, Injures Dozens," *The Washington Post. (55.5)*

Cassidy, Keith, "Hazard Control and Major Hazards," CIMAH *Safety Reports,* Institution of Chemical Engineers, Loughborough University of Technology, January 22-26, 1990. (79)

Community and Worker Right-To-Know-News, "Two Killed, Five Injured by HF in accident at Texas Refinery," Volume 5, Number 10, Washington, D.C., March 22, 1991. (489.8)

Coulter, Bill, "Disaster Prone Industry Brings Pain and Gain to Texas *City," Houston Chronic/e,* November, 1987. (133.1)

The Daily Breeze, 'Explosions, Fires Part of Mobil History," July 16, 1988. (139.53)

Daunt, **Tina,** "Officials Probe Chemical Leak That Injured 7 at Refinery,' *Los Angeles Times,* February 11, 1990, p J1. (134)

Daunt, **Tina,** "Plant Acid Spill Safety Plan Delayed," *Los* Angeles *Times,* February 18, 1990. (134.5)

Dawson, Bill and T.E. Bell, "Some Texas City Evacuees Unable to Return Home,' *Houston Chronic/e,* November 1, 1987, p IO. (134.7)

Du Pont Chemicals, *Du Pont's La Porte, Texas Plant's Disaster Scenarios, Air Permit Submitted to TACB-1991,* Wilmington, DE, 1991. (139)

Energy Safety Council, *Energy Safety News, HAZMAT Conference '92 Update,* "Bhopal in America? Will E.P.A Act to Prevent It?," Lincolnshire, IL, 60069. (139.05)

Environmental Protection Institute, *Press Briefing Statement on Marathon Refinery Accident,* Texas City, TX, November 16, 1987. (385)

Farrar, Foss, and Bob Friskel, "Blast at Phillips Leaves Smoke Pall," *Kansas City Kansan,* November 8, 1976. (139.55)

Fineman, Mark, "New Generation Hit; Bhopal -- Death Won't Leave City," *Los Angeles Times,* March 13, 1989, Part **1,** p 1. (139.6)

HF Release Response Decision Tree, Phillips 66 Refinery. (135.7)

Kansas City Times, 'Oil Blaze Probe to Start,' March 29, 1973. (368)

Lanterman, Ken, "Federal Expert Says Texas City Was Close to Massive Tragedy, Thousands Could Have Been Killed,' *Houston Post,* November 22, 1987. (291)

Marsh & McLennan, *One Hundred Largest Losses, a Thirty-Year Review of Properly Damage Losses In the Hydrocarbon-chemical Industries,* Eighth Edition, May 1985. (328.55)

Mathews, Jay, "25,000 Evacuated After Gas Leak," *The Washington Post,* September 4, 1988, p A3. *(328.63)*

Rice, Gary, and Joseph H. McCarty Jr., "Vapor Cloud Affects 38 at Plant," *The Kansas City Times,* June 6, 1978, p 14A. (424.05)

Shearer, Cody, "Another Bhopal Accident Could Happen Here," *Las Vegas Sun,* December 20, 1987. (437)

Stewart, Don, and Sandi McDaniel, "Three U.S. Spills Show Acid Danger," *The Tulsa Tribune,* April 28, 1988. (466.5)

Stewart, Don, and Sandi McDaniel, 'Danger Adrift, Chaos Reigned After Sun Co. Spill," *The Tulsa Tribune,* April 28, 1988, p 1A. (466)

Stein, George, "Torrance School Pupils, Faculty Felled by Fumes," *Los Angeles Times,* March 9, 1989, p 1. (464.3)

Toxic Chemical Release inventory (TRI) 1989, Hydrogen Fluoride, November 5, 1991. (Also available on disk) (480)

Toxic Chemical Release Inventory, (TRI) 1989, "Hydrogen Fluoride Releases in lbs/year." (489.5)

U.S. Department of Transportation, *Hazardous Materials Information System (HMIS),* January 1, 1980 - December 31, 1990. (155)

U.S. Department of Transportation, *Hazardous Materials Safety, Hazardous Materials Information System,* "Hydrogen Fluoride Incidents Since 1971 by Date," November 25, 1991. (157)

U.S. Environmental Protection Agency, *Hydrofluoric Acid Events in Acute Hazards Events Database,* June 5, 1991. (200)

U.S. Environmental Protection Agency, *Acute Hazards Events Database,* Listing of chemical release and number of evacuees, Document Name: Mainw. (201)

US. Environmental Protection Agency, *ARIP Data on Hydrogen Fluoride,* Data on Releases from 10/31/86 to 3/15/91, January 29, 1992. (42)

U.S. Environmental Protection Agency, U.S. Department of Transportation, U.S. Coast Guard, National Response Center, *HF Accident Data from ERNS Data Base 1987-1991*, November 10, 1991. (139.52)

U.S. Nuclear Regulatory Commission, *Release of UF, from a Ruptured Model 48Y Cylinder at Sequoyah Fuels Corporation Facility: Lessons-Learned Report,* Washington, D.C., June 1986, Document Number: NUREG-1198. (493)

U.S. Nuclear Regulatory Commission, *Release of UF, From a Ruptured Model 48Y Cylinder at Sequoyah Fuels Corporation Facility: Lessons-Learned Report,* "NRC Staff Responses to the Recommendations Made by the Lessons-Learned Group (Supplement Number 1)," Washington, D.C., August 1986. (494)

Vobejda, Gloria, "Refinery Fumes Hospitalize Four," *The Kansan,* June 6, 1978. (498)

Ware, J.W., *Lake Charles LAB Plant: HF Release Scenarios,* Vista Chemical Company, May 4, 1992. (497.9)

Wilson, David S., '20,000 Flee Fumes in East Los Angeles and 3 Suburbs," *The New York Times,* September 4, 1988, p 26. (506)

ED_002700_00005500-00370

Chapter 9

Blewitt, D.N., J.F. Yohn, R.P. Koopman, and T.C. Brown, Conduct of Anhydrous Hydrofluoric Acid Spill *Experiments,* International Conference on Vapor Cloud Modeling. (60)

Brookhaven National Laboratory, Biomedical and Environmental Assessment Group, *Development of a Three-Dimensional Computer Code for Modeling Water Spraying of Unconfined Releases of Hydrogen Fluoride and Other Gases,* Upton, NY, November 1, 1991. Proposal to the U.S. Environmental Protection Agency, Office of Chemical Emergency Preparedness and Response. (135.4)

Chemical Week, "Which Catalyst for Alkylation?," February 24, 1988, p 11. (500)

Du Pont Chemicals, EPA - Du Pont Meeting, HF Clean Air Act Study. Includes agenda, notes on Du Pont's HF Philosophy, notes on Process Hazards Management System, Advanced Modeling of Accidental HF Release Scenarios, Equipment failure at Quimica **Fluor** - Matamoros Plant, HF Safety. (137)

Fthenakis, V.M. and K.W. Schatz, *Numerical Simulations of Turbulent Flow Fields Caused by Spraying of Water on Large Releases of Hydrogen Fluoride,* Biomedical and Environmental Assessment Division, Department of Applied Science, Brookhaven National Laboratory, Associated Universities, Inc., May 1991. (139.66)

Fthenakis, V.M. and V. Zakkay, "A Theoretical Study of Absorption of Toxic Gases by Spraying,' *Journal of Loss Prevention in the Process Industries,* Volume 3, April 1990, p 197-205. (139.68)

Hague, William J., and William Pepe, "Flow Chamber Simulations of Aerosol formation and Liquid Jet Breakup For Pressurized Releases of Hydrogen Fluoride," *P/ant/Operations Progress,* Volume 9, Number 2, April 1990, pp 125-130. (147.2)

Industry Cooperative HF Mitigation/Assessment Program Ambient Impact Assessment Subcommittee, *Development and Validation of Atmospheric Dispersion Models for Ideal Gases and Hydrogen Fluoride, Part I: Technical Reference Manual,* Shell Research Limited, Thornton Research Centre, Chester, England, November 1990, Document Number TNER.90.015. Prepared by McFarlane, K., A. Prothero, J.S. Puttock, P.T. Roberts, and H.W. M. **Witlox**. (328.65)

Industry Cooperative HF Mitigation/Assessment Program Ambient Impact Assessment Subcommittee, *HGSYSTEM: Dispersion Models for Ideal Gases and Hydrogen Fluoride Tutorial and Quick-Reference Guide,* Shell Research Limited, Thornton Research Centre, Chester, England, May 1991, Document Number TNER.91.007. Prepared by **Witlox**, H.W.M. (508)

International Conference and Workshop on Modeling and Mitigating the Consequences of Accidental Releases of Hazardous Materials, May 20-24, 1991, Fairmont Hotel, New Orleans, Louisiana, American Institute of Chemical Engineers, Center for Chemical Process Safety, New York, 1991, "Numerical Simulation of the Mitigation of HF Cloud Concentrations by Means of Vapor Barriers and Water Spray Curtains," by Meroney, Robert N. (330)

Koopman, Ronald P., Donald L. Ermak and Stevens T. **Chan**, "A Review of Recent Field Tests and Mathematical Modelling of Atmospheric Dispersion of Large Spills of Denser-Than-Air Gases,' *Atmospheric Environment,* Volume 23, Number 4, pp 731-745, 1989. (289.2)

Lehr, W.J., *2nd Review of ALOHA 5.0 (update), Modeling and Simulation Studies,* National Oceanic and Atmospheric Administration, Hazardous Material Response Branch, April 30, 1990. (293.1)

ED_002700_00005500-00371

National Oceanic and Atmospheric Administration, *CAMEO™ 3.0 Computer-Aided Management of Emergency Operations,* Hazardous Materials Response Branch, Seattle, September 1991. (361.5)

The Netherlands Organisation of Applied Scientific Research, "Methods for the Determination of Possible Damage," *CPR 76E,* First Edition 1992. (362.5)

International Conference and Workshop on Modeling and Mitigating the Consequences of Accidental Releases of Hazardous Materials, May 20-24, 1991, Fairmont Hotel, New Orleans, Louisiana, American Institute of Chemical Engineers, Center for Chemical Process Safety, New York, 1991, "The HGSYSTEM Dispersion Modelling Package: Development and Predictions,' by Puttock, J.S., K. McFarlane, A. Prothero, P.T. Roberts, F.J. Rees, H.W.M. Witlox, and Douglas N. Blewitt. (416.5)

Hanna, Steven R., Joseph C. Chang and David G. Strimaitis, *Review of Dense Gas Modeling with Emphasis on Application in Planning for Accidental Releases and Emergency Responses,* Final Report, Contract No. C91319, South Coast Air Quality Management District, February 26, 1992. (441)

South Coast Air Quality Management District, *Modeling of Accidental Hydrogen Fluoride and Sulfuric Acid Releases and Comparison of Air Quality Impacts,* January 24, 1990. (342)

Spicer, T.O., and J. Havens, *Modeling HF and NH3 Spill Test Data Using DEGADIS,* Department of Chemical Engineering, University of Arkansas, Fayetteville, Arkansas, August 1988. (444)

Stratco, Inc., *Sulfuric Acid Alkylation -- A Viable Alternative to Hydrofluoric Acid Alkylation,* March 26, 1992. (467.3)

Tilton, James N. and Carl W. Farley, "Predicting Liquid Jet Breakup and Aerosol Formation During the Accidental Release of Pressurized Hydrogen Fluoride,' *P/ant/Operations Progress,* Volume 9, Number 2, April 1990, p 120-124. (477)

Turner, R.M. and S. Fairhurst, *Toxicology of Substances in Relation to Major Hazards, Hydrogen Fluoride,* London, 1990. (489.7)

U.S. Coast Guard, *Vulnerability Model, A Simulation System for Assessing Damage Resulting From Marine Spills,* Washington, D.C., June 1975, Document Number AD-A015245. Prepared by Eisenberg, Norman A., Cornelius J. Lynch, and Roger J. Breeding, Enviro Control, Inc. (139.513)

Woodward, John, ed., *International Conference on Vapor Cloud Modeling, November 2-4, 1987, Boston Marriott Cambridge, Cambridge, MA,* American Institute of Chemical Engineers, Center for Chemical Process Safety, New York, 1987, 'Specialized Techniques for Modeling the Unique Phenomena Exhibited in HF Releases," by Chikhliwala, E.D. and W.J. Hague. (120)

Woodward, John, ed., *International Conference on Vapor Cloud Modeling, November 2-4, 1987, Boston Marriott Cambridge, Cambridge, MA,* American Institute of Chemical Engineers, Center for Chemical Process Safety, New York, 1987, The Mixing of Anhydrous Hydrogen Fluoride with Moist Air," by Clough, P.N., D.R. Grist, and C.J. Wheatley. (130)

Woodward, John, ed., *International Conference on Vapor Cloud Modeling, November 2-4, 1987, Boston Marriott Cambridge, Cambridge, MA,* American Institute of Chemical Engineers, Center for

Chemical Process Safety, New York, 1987, "FEM3 Modeling of Ammonia and Hydrofluoric Acid Dispersion," by Chan, Stevens T., Howard C. **Rodean,** and Doug Blewitt. (100)

ED_002700_00005500-00373

Chapter 10

American Industrial Hygiene Association, *Concepts and Procedures for the Development of Emergency Response Planning Guidelines (ERPGs),* ERPG Committee, December 1989. (10.47)

General

American Paint Coat Journal, January 2, 1989, p 54.