60% SUBMITTAL

RW-21 PROJECT AREA REMEDIAL DESIGN

OPERABLE UNIT 3

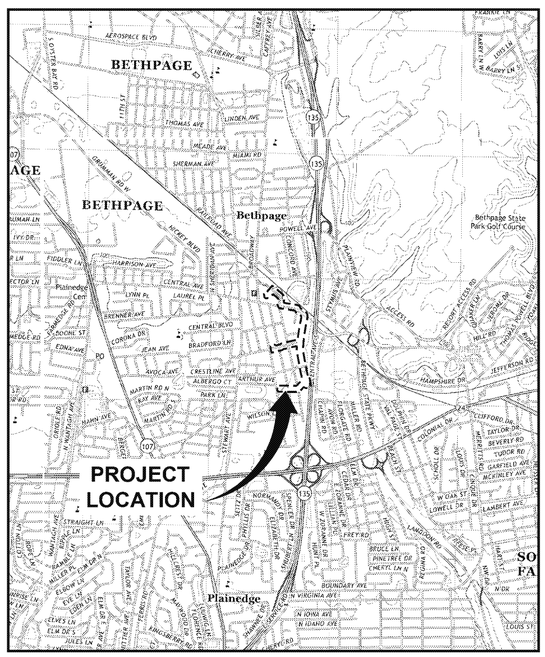

REFERENCE: BASE MAP USGS 7.5 MINUTE QUADRANGLE., (QUADNAME), (ST)., (DATE)

LOCATION MAP

0 2000' 4000'
GRAPHIC SCALE

FORMER GRUMMAN SETTLING PONDS

DATE ISSUED
AUGUST 2016

NORTHROP GRUMMAN SYSTEMS CORPORATION
BETHPAGE, NEW YORK

ARCADIS | Design & Consultancy for natural and built assets

ARCADIS OF NEW YORK, INC.

NO ALTERATIONS PERMITTED HEREON EXCEPT AS PROVIDED UNDER SECTION 7209 SUBDIVISION 2 OF THE NEW YORK STATE EDUCATION LAW

INDE TO DRA IN S

GENERAL
G-1 NOTES/ABBREVIATIONS

CIVIL
C-1 OVERALL SITE PLAN AND GENERAL NOTES
C-2 PROPOSED RW-21 TREATMENT BUILDING
C-3 RECOVERY WELL SITE PLANS
C-4 CONVEYANCE PIPELINE PLAN/PROFILES - RW-21 (STA. 0 00-3 50 3 50 - 7 10)
C-5 CONVEYANCE PIPELINE PLAN/PROFILES - RW-21 (STA. 7 10 - 15 00)
C-6 CONVEYANCE PIPELINE PLAN/PROFILES - RW-21 (STA. 15 00 - 23 00)
C-7 CONVEYANCE PIPELINE PLAN/PROFILES - RW-21 (STA. 23 00 - 30 00)
C-8 CONVEYANCE PIPELINE PLAN/PROFILES - RW-20 (STA. 30 00 - 34 00)
C-9 CONVEYANCE PIPELINE PLAN/PROFILES - RW-22 (STA. 0 00 - 7 50)
C-10 CONVEYANCE PIPELINE PLAN/PROFILES - RW-20 (STA. 0 00 - 8 00)
C-11 PIPELINE DETAILS
C-12 MISCELLANEOUS SITE DETAILS
C-13 MISCELLANEOUS SITE DETAILS

PROCESS
P-1 PROCESS FLOW DIAGRAM
P-2 PIPING AND INSTRUMENTATION DIAGRAM LEGEND AND INTERLOCK SHEET
P-3 PIPING AND INSTRUMENTATION DIAGRAM (SHEET 1 OF 5)
P-4 PIPING AND INSTRUMENTATION DIAGRAM (SHEET 2 OF 5)
P-5 PIPING AND INSTRUMENTATION DIAGRAM (SHEET 3 OF 5)
P-6 PIPING AND INSTRUMENTATION DIAGRAM (SHEET 4 OF 5)
P-7 PIPING AND INSTRUMENTATION DIAGRAM (SHEET 5 OF 5)

STRUCTURAL
S-1 TREATMENT BUILDING ELEVATIONS
S-2 TREATMENT BUILDING FOUNDATION PLAN
S-3 TREATMENT BUILDING FOUNDATION DETAILS

ELECTRICAL
E-1 ELECTRICAL SITE PLAN - TREATMENT BUILDING AND RW-22
E-2 ELECTRICAL SITE PLAN - WELL VAULTS RW-20 AND RW-21
E-3 ELECTRICAL ONE-LINE - TREATMENT BUILDING AND RW-22
E-4 ELECTRICAL ONE-LINE - WELL VAULTS RW-20 AND RW-21
E-5 TREATMENT BUILDING ELECTRICAL EQUIPMENT AND LIGHTING LAYOUT
E-7 PANEL SCHEDULE AND CONDUIT SCHEDULE
E-8 ELECTRICAL DETAILS
E-9 MCC ELEVATION

MECHANICAL
M-1 MECHANICAL LEGEND AND ABBREVIATIONS
M-2 MECHANICAL DETAILS (2 SHEETS)
M-3 WELL VAULT MECHANICAL PLAN AND SECTION
M-4 TREATMENT BUILDING MECHANICAL PLAN AND EQUIPMENT LIST
M-5 TREATMENT BUILDING MECHANICAL SECTIONS
M-6 TREATMENT BUILDING MECHANICAL DETAILS

CITY: DIV/GROUP: DB: LD: PIC: PM: TM: LYR:ON=*;OFF=*REF*
Z:\ENVCAD\SYRACUSE\ACT\NY0149\62415\R34E5\1496R33E3Q01.dwg LAYOUT: COVER SAVED: 9/2/2016 5:33 PM ACADVER: 19.1S (LMS TECH) PAGESETUP: PDF D PLOTSTYLETABLE: PLTCONT1.CTB PLOTTED: 9/2/2016 6:22 PM BY: SANCHEZ, ADRIAN
XREFS: IMAGES: PROJECTNAME: ----
2013Amityville.jpg
2013Freeport.jpg
2013Hicksville.jpg
2013Huntington.jpg

DRAWING TO BE PROVIDED WITH 95% DESIGN SUBMITTAL

CITY:CRANBURY-NJ DIV/GROUP:ENVCAD DB:A.SANCHEZ, T.FATTO LD: PIC: PM: C.SANGIOVANNI TM: LYR:ON=*;OFF=*REF*
C:\ENVCAD\CRANBURY\ACT\NY001496\2415\R33E3\DWG\NY001496D10.dwg LAYOUT: G-2 SAVED: 8/26/2016 2:44 PM ACADVER: 19.1S (LMS TECH) PAGESETUP: CTB-DWF-LD PLOTSTYLETABLE: PLTCONT.CTB PLOTTED: 8/26/2016 2:45 PM BY: FATTO, TRACEY

THIS BAR REPRESENTS ONE INCH ON THE ORIGINAL DRAWING:

USE TO VERIFY FIGURE REPRODUCTION SCALE

No.	Date	Revisions	By	Ckd

THIS DRAWING IS THE PROPERTY OF THE ARCADIS ENTITY IDENTIFIED IN THE TITLE BLOCK AND MAY NOT BE REUSED OR ALTERED IN WHOLE OR IN PART WITHOUT THE EXPRESS WRITTEN PERMISSION OF SAME.

Professional Engineer's Name

Professional Engineer's No.

State	Date Signed	Project Mgr.
Designed by	Drawn by	Checked by

ARCADIS Design & Consultancy for natural and built assets

ARCADIS OF NEW YORK, INC.

NO ALTERATIONS PERMITTED HEREON EXCEPT AS PROVIDED UNDER SECTION 7209 SUBDIVISION 2 OF THE NEW YORK STATE EDUCATION LAW

NORTHROP GRUMMAN SYSTEMS CORPORATION ● OPERABLE UNIT 3 ● BETHPAGE, NEW YORK

RW-21 AREA - 60% REMEDIAL DESIGN

NOTES / ABBREVIATIONS

ARCADIS Project No.
NY001496.2415.R33E3

Date
AUGUST 2016

ARCADIS
2 HUNTINGTON QUADRANGLE
SUITE 1S10
MELVILLE, NEW YORK
Tel: 631.249.7600

G-1

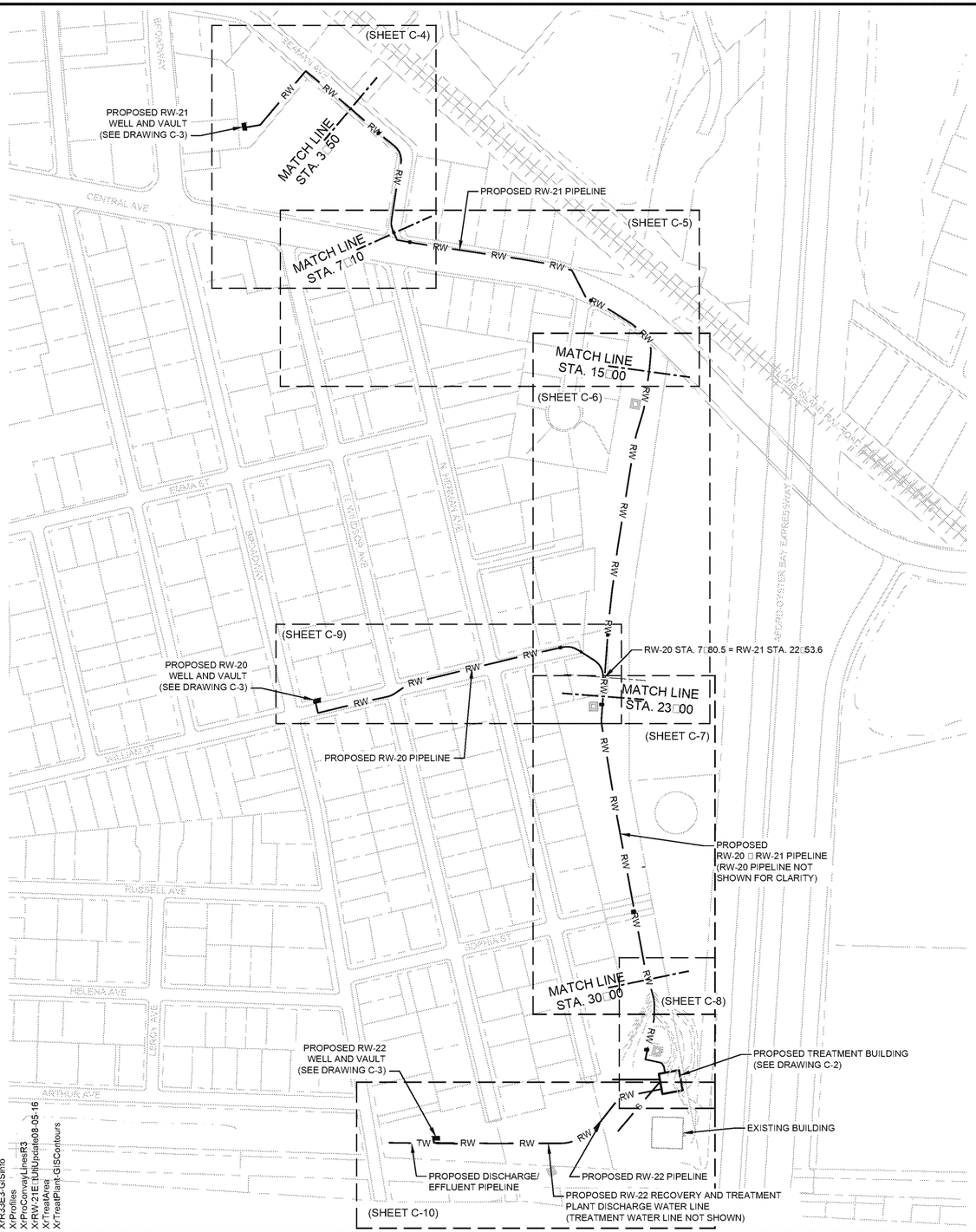

LEGEND:

- PARCEL/LOT LINE
- ROAD
- RAILROAD TRACKS
- EDGE OF WATER
- RW — NEW CONVEYANCE LINE
- TW — NEW DISCHARGE/EFFLUENT LINE

GENERAL NOTES:

1. BASE MAP BY NELSON POPE, ENGINEERS SURVEYORS, 572 WALT WHITMAN ROAD, MELVILLE, N.Y. 11747, DATED JUNE 30, 2016, TITLED "TOPOGRAPHIC MAP", DRAWING No. 16129TS.DWG, AT A SCALE OF 1" = 40'. ADDITIONAL PROPERTY AND PARCEL LINE INFORMATION OBTAINED FROM NASSAU COUNTY GIS DEPARTMENT.
2. LOCATION OF UNDERGROUND UTILITIES AND OTHER UNDERGROUND STRUCTURES ARE OBTAINED FROM GIS SOURCES, UTILITY DRAWINGS, AND FIELD MEASUREMENTS WHERE POSSIBLE; ALL UTILITY LOCATIONS ARE APPROXIMATE AND OTHER UNDERGROUND UTILITIES AND STRUCTURES MAY EXIST, THE LOCATION OF WHICH ARE PRESENTLY UNKNOWN.
3. ACTUAL SITE FEATURES AT THE TIME OF CONSTRUCTION MAY DIFFER FROM THOSE SHOWN ON THE DESIGN DRAWINGS. THE CONTRACTOR SHALL PROMPTLY NOTIFY THE OWNER AND ENGINEER (IN WRITING) OF ANY SUCH DIFFERENCES THAT MAY AFFECT THE PERFORMANCE OF THE WORK.
4. THE OWNER WILL OBTAIN A SPDES PERMIT EQUIVALENT. THE CONTRACTOR IS RESPONSIBLE FOR OBTAINING ANY OTHER FEDERAL, STATE, COUNTY, AND/OR CITY-SPECIFIC PERMITS THAT MAY BE REQUIRED TO PERFORM THE WORK, INCLUDING NYSDOT WORK PERMITS.
5. INFORMATION RELATED TO SUBSURFACE CONDITIONS IS APPROXIMATE AND SHOULD NOT BE RELIED ON AS A COMPLETE DEPICTION OF SITE CONDITIONS. THE CONTRACTOR SHALL VERIFY ALL EXISTING CONDITIONS, INCLUDING ABOVE GRADE AND SUBSURFACE FEATURES WHETHER OR NOT SHOWN ON DESIGN DRAWINGS OR OTHERWISE DESCRIBED IN THE CONTRACT DOCUMENTS.
6. THE TECHNICAL WORK AND CONTRACTOR REQUIREMENTS ARE DESCRIBED IN SEVERAL DOCUMENTS THAT COLLECTIVELY REPRESENT THE REMEDIAL DESIGN. THESE DOCUMENTS INCLUDE THE DESIGN DRAWINGS, TECHNICAL SPECIFICATIONS, CAMP, CQAP, CERP, AND CONTINGENCY PLAN. THESE DOCUMENTS SHOULD BE THOROUGHLY REVIEWED BY THE CONTRACTOR. ANY DIFFERENCES IDENTIFIED BY THE CONTRACTOR BETWEEN THE INFORMATION PRESENTED IN THE ABOVE-LISTED DOCUMENTS SHALL BE SUBMITTED TO THE ENGINEER (IN WRITING) FOR CLARIFICATION.
7. GRAY SHADED ITEMS REPRESENT EXISTING CONDITIONS/INFRASTRUCTURE AND ARE NOT INCLUDED IN THIS CONTRACT.

UTILITY NOTES:

1. THE LOCATIONS, ALIGNMENTS, AND CONSTRUCTION OF UTILITIES SHOWN ON THE DESIGN DRAWINGS ARE APPROXIMATE AND BASED ON INFORMATION READILY AVAILABLE TO THE OWNER/ENGINEER. THE CONTRACTOR SHALL VERIFY THE PRESENCE AND LOCATION OF ALL OVERHEAD/UNDERGROUND SITE FEATURES AND UTILITIES RELEVANT TO AND POTENTIALLY TO BE ENCOUNTERED DURING THE WORK. ADDITIONAL SITE FEATURES AND UTILITIES MAY BE PRESENT THAT ARE NOT SHOWN ON THE DESIGN DRAWINGS.
2. THE CONTRACTOR IS RESPONSIBLE FOR CONTACTING/COORDINATING WITH DIG SAFELY NEW YORK TO LOCATE AND IDENTIFY UNDERGROUND UTILITIES. THE DIG SAFELY NEW YORK PHONE NUMBER IS 811; THE WEBSITE IS WWW.DIGSAFELYNEWYORK.COM.
3. THE CONTRACTOR IS RESPONSIBLE FOR SUBCONTRACTING/COORDINATING WITH AN APPROPRIATE PRIVATE UTILITY LOCATOR TO LOCATE AND IDENTIFY UNDERGROUND UTILITIES WITHIN PROPERTY LIMITS.
4. EXCEPT WHERE NOTED OR AS OTHERWISE INDICATED IN THE REMEDIAL DESIGN, THE CONTRACTOR IS RESPONSIBLE FOR THE MAINTENANCE AND PROTECTION OF ALL OVERHEAD/UNDERGROUND SITE FEATURES AND UTILITIES THAT MAY BE AFFECTED BY THE WORK. ALL UTILITIES, UNLESS STATED OTHERWISE, SHALL REMAIN IN OPERATION FOR THE DURATION OF THE WORK.
5. THE CONTRACTOR IS RESPONSIBLE FOR CONTACTING/COORDINATING WITH THE APPROPRIATE UTILITY COMPANIES FOR THE TEMPORARY BRACING, REMOVAL, RELOCATION, AND/OR REPLACEMENT OF ANY UTILITIES, UTILITY POLES, OR GUY WIRES.
6. THE CONTRACTOR SHALL COORDINATE WITH PSEG TO OBTAIN ELECTRICAL SERVICE NECESSARY TO SUPPORT REMEDIAL CONSTRUCTION ACTIVITIES.
7. IF THE CONTRACTOR DAMAGES EXISTING UTILITY EQUIPMENT OR STRUCTURES, THE CONTRACTOR SHALL BE RESPONSIBLE FOR NOTIFYING THE UTILITY COMPANY OR MUNICIPALITY AND FULLY REPAIRING DAMAGES IN ACCORDANCE WITH THE REQUIREMENTS OF THE UTILITY COMPANY / MUNICIPALITY.

0 160' 320'
APPROXIMATE SCALE IN FEET

THIS BAR REPRESENTS ONE INCH ON THE ORIGINAL DRAWING: USE TO VERIFY FIGURE REPRODUCTION SCALE

No.	Date	Revisions	By	Ckd

THIS DRAWING IS THE PROPERTY OF THE ARCADIS ENTITY IDENTIFIED IN THE TITLE BLOCK AND MAY NOT BE REUSED OR ALTERED IN WHOLE OR IN PART WITHOUT THE EXPRESS WRITTEN PERMISSION OF SAME.

Professional Engineer's Name
Professional Engineer's No.
State | Date Signed | Project Mgr.
Designed by | Drawn by A.SANCHEZ | Checked by

ARCADIS Design & Consultancy for natural and built assets
ARCADIS OF NEW YORK, INC.
NO ALTERATIONS PERMITTED HEREON EXCEPT AS PROVIDED UNDER SECTION 7209 SUBDIVISION 2 OF THE NEW YORK STATE EDUCATION LAW

NORTHROP GRUMMAN SYSTEMS CORPORATION ● OPERABLE UNIT 3 ● BETHPAGE, NEW YORK
AREA 21 - 60% REMEDIAL DESIGN

OVERALL SITE PLAN AND GENERAL NOTES

CIVIL

ARCADIS Project No.
NY001496.2415.R33E3
Date
AUGUST 2016
ARCADIS
2 HUNTINGTON QUADRANGLE
SUITE 1S10
MELVILLE, NEW YORK
TEL. 631.249.7600

C-1

CITY: DIV/GROUP: DB: LD: PIC: PM: TM: LYR:ON=*;OFF=*REF*
Z:\ENVCAD\SYRACUSE\ACT\NY001496\2415\R34E3\1496R33E3C01.dwg LAYOUT: C-1 SAVED: 9/2/2016 6:18 PM ACADVER: 19.1S (LMS TECH) PAGESETUP: ---- PLOTSTYLETABLE: ---- PLOTTED: 9/2/2016 6:25 PM BY: SANCHEZ, ADRIAN
XREFS: X:\BDR-C-LD X:\R33E302 X:\R33E3-GISinfo X:\Profiles X:\ProConveyLinesR3 X:\RW-21TE1UtilUpdate08-05-16 X:\TreatPlant X:\TreatPlant-GISContours
IMAGES: PROJECTNAME: ----

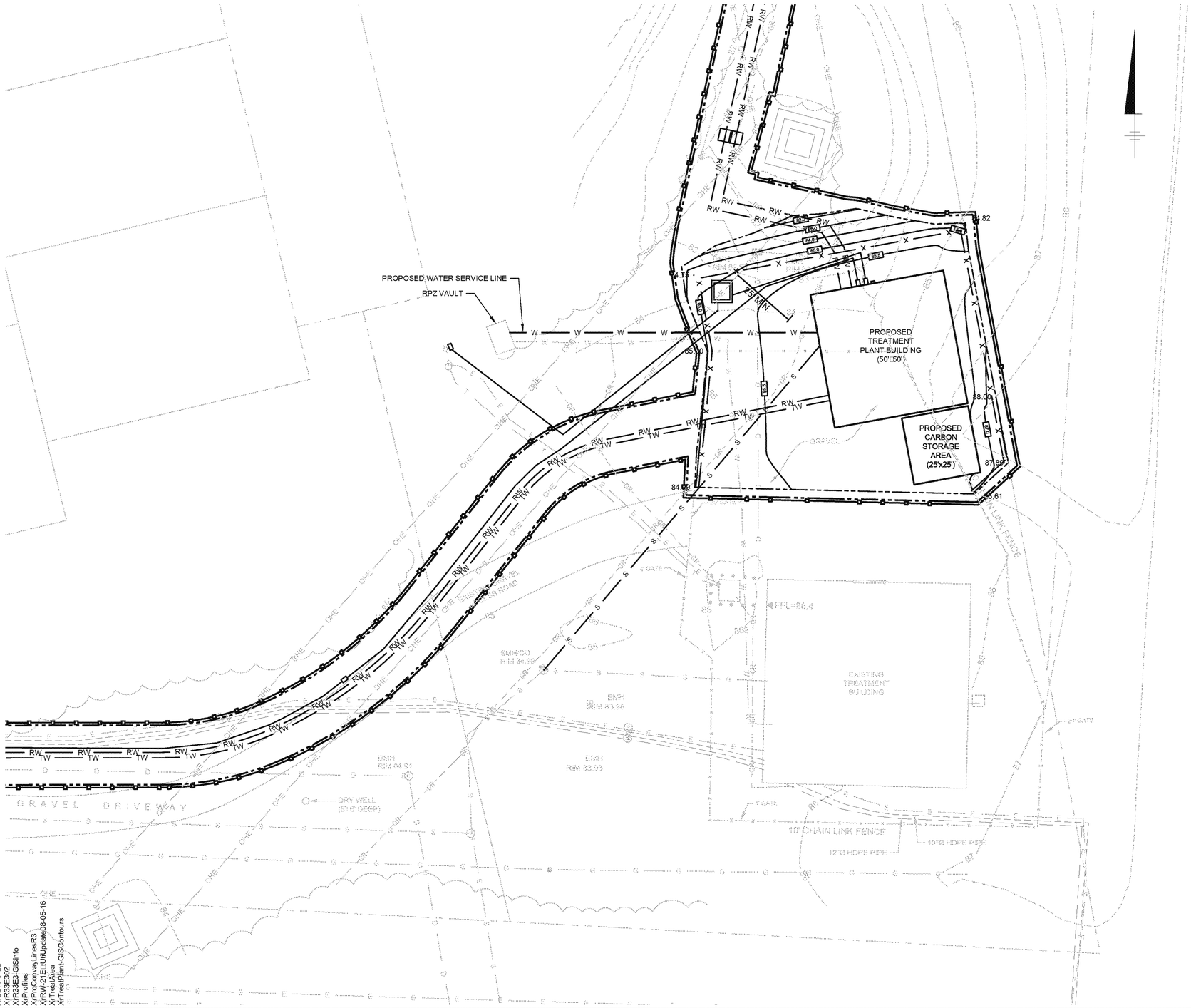

LEGEND:

- PARCEL/LOT LINE
- EXISTING GRADE CONTOUR (1-FOOT INTERVAL)
- FENCE
- DRAINAGE LINE
- DRAINAGE MANHOLE
- ELECTRICAL LINE
- ELECTRICAL MANHOLE
- EXTENT OF OVERHEAD ELECTRICAL LINES
- ELECTRICAL GROUNDING LINE
- GAS LINE
- SANITARY LINE
- SANITARY MANHOLE
- TELEPHONE LINE
- WATER LINE
- VEGETATION
- RW — NEW CONVEYANCE LINE
- TW — NEW DISCHARGE/EFFLUENT LINE
- NEW BUILDING
- W — NEW WATER SERVICE LINE
- X — NEW FENCE
- S — NEW SANITARY LINE

NOTES:

1. REFER TO DRAWING C-1 FOR BASEMAP AND ADDITIONAL LEGEND INFORMATION.
2. GRAY SHADED ITEMS REPRESENT EXISTING CONDITIONS/INFRASTRUCTURE AND ARE NOT INCLUDED IN THIS CONTRACT.

0 20' 40'
APPROXIMATE SCALE IN FEET

THIS BAR REPRESENTS ONE INCH ON THE ORIGINAL DRAWING: USE TO VERIFY FIGURE REPRODUCTION SCALE

No.	Date	Revisions	By	Ckd

THIS DRAWING IS THE PROPERTY OF THE ARCADIS ENTITY IDENTIFIED IN THE TITLE BLOCK AND MAY NOT BE REUSED OR ALTERED IN WHOLE OR IN PART WITHOUT THE EXPRESS WRITTEN PERMISSION OF SAME.

Professional Engineer's Name
Professional Engineer's No.
State | Date Signed | Project Mgr.
Designed by | Drawn by A.SANCHEZ | Checked by

ARCADIS Design & Consultancy for natural and built assets
ARCADIS OF NEW YORK, INC.
NO ALTERATIONS PERMITTED HEREON EXCEPT AS PROVIDED UNDER SECTION 7209 SUBDIVISION 2 OF THE NEW YORK STATE EDUCATION LAW

NORTHROP GRUMMAN SYSTEMS CORPORATION • OPERABLE UNIT 3 • BETHPAGE, NEW YORK
AREA 21 - 60% REMEDIAL DESIGN

PROPOSED RW-21 TREATMENT BUILDING

CIVIL

ARCADIS Project No. NY001496.2415.R33E3
Date AUGUST 2016

ARCADIS
2 HUNTINGTON QUADRANGLE
SUITE 1S10
MELVILLE, NEW YORK
TEL. 631.249.7600

C-2

CITY: DIV/GROUP: DB: LD: PIC: PM: TM: LYR:ON=*;OFF=*REF*
Z:\ENVCAD\SYRACUSE\ACT\NY001496\2415\R34E3\1496R33E3C01.dwg LAYOUT: C-2 SAVED: 9/2/2016 6:18 PM ACADVER: 19.1S (LMS TECH) PAGESETUP: ---- PLOTSTYLETABLE: ---- PLOTTED: 9/2/2016 6:25 PM BY: SANCHEZ, ADRIAN
XREFS: IMAGES: PROJECTNAME: ----
X:\BDR-C-LD
X:\R33E302
X:\R33E3:GISinfo
X:\Profiles
X:\ProConvayLinesR3
X:\RW-21E1UtUpdate\08-05-16
X:\Treat\Xrefs
X:\Treat\Plant-GISContours

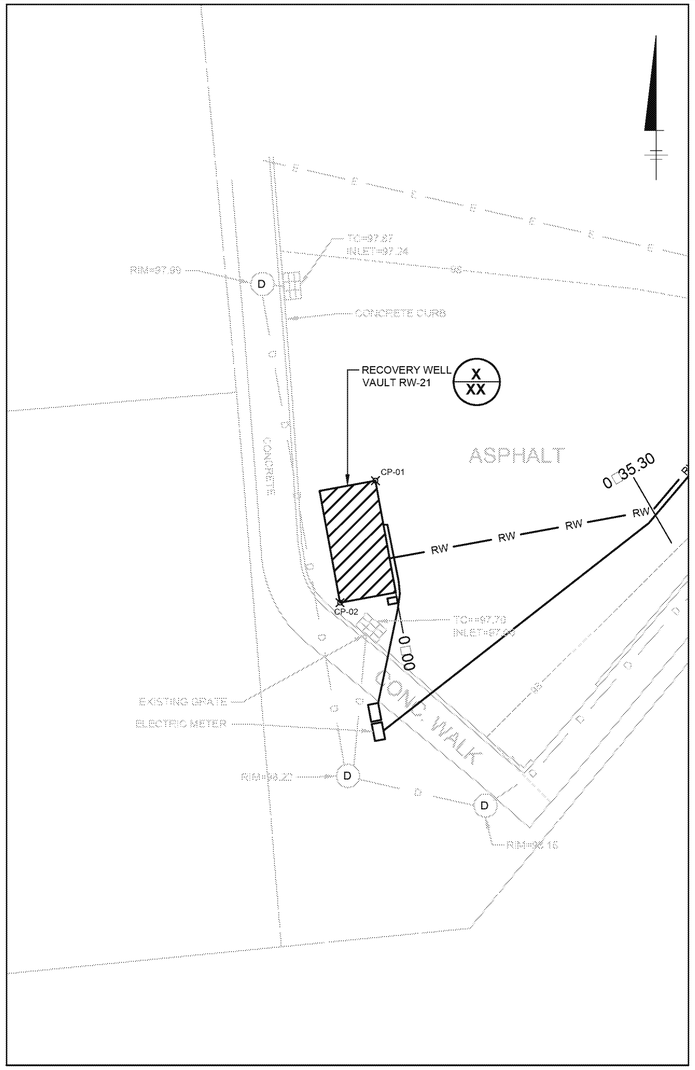

SITE PLAN - RW-21 WELL VAULT

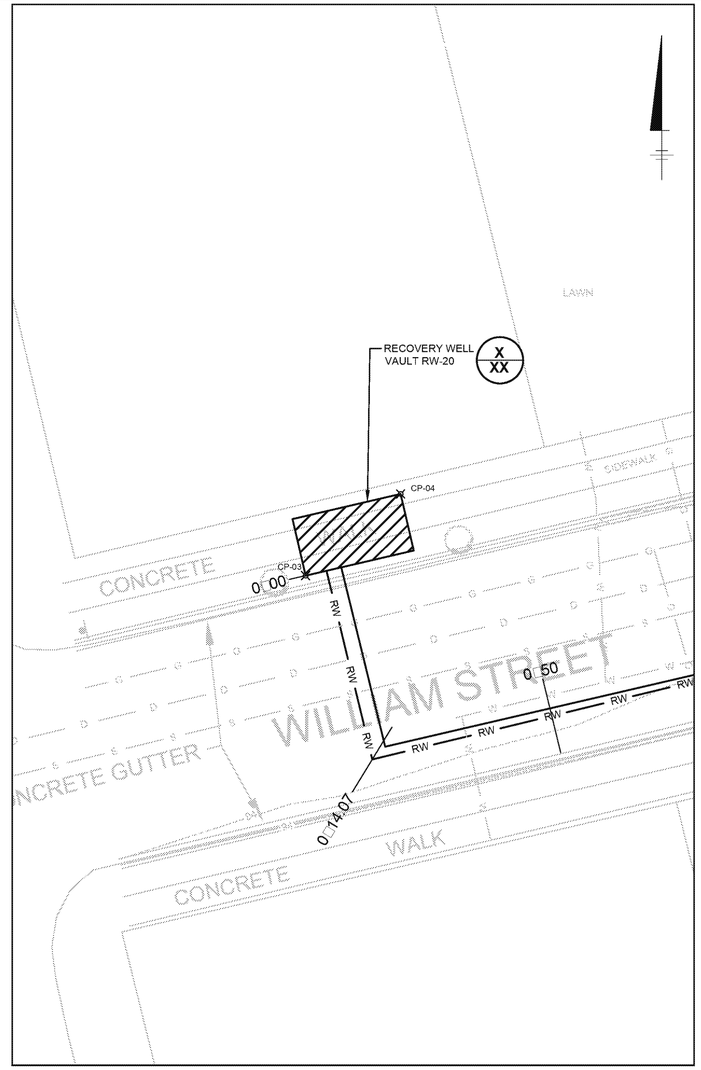

SITE PLAN - RW-20 WELL VAULT

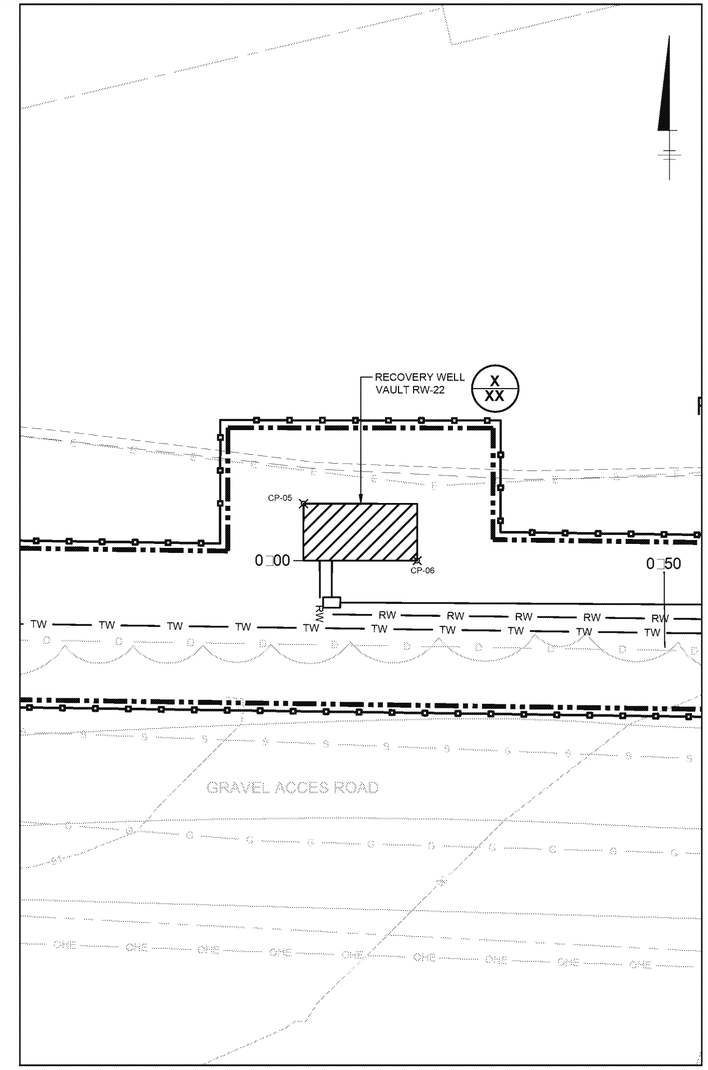

SITE PLAN - RW-22 WELL VAULT

LEGEND:

- PARCEL/LOT LINE
- EXISTING GRADE CONTOUR (1-FOOT INTERVAL)
- ELECTRICAL LINE
- EXTENT OF OVERHEAD ELECTRICAL LINES
- GAS LINE
- SANITARY LINE
- DRAINAGE MANHOLE
- WATER LINE
- STORM DRAIN LINE
- STORM DRAIN LINE
- VEGETATION
- ROAD
- NEW ELECTRICAL LINE
- NEW RECOVERY WELL CONVEYANCE WATER PIPE
- NEW TREATED WATER LINE
- NEW RECOVERY WELL VAULT

VAULT LOCATION COORDINATES		
ID	NORTHING	EASTING
CP–01	208840.40	1128663.11
CP–02	208824.29	1128658.43
CP–03	207428.81	1128831.63
CP–04	207439.59	1128844.18
CP–05	206372.88	1129120.42
CP–06	206365.35	1129135.41

NOTES:

1. REFER TO DRAWING C-1 FOR BASEMAP AND ADDITIONAL LEGEND INFORMATION.
2. GRAY SHADED ITEMS REPRESENT EXISTING CONDITIONS/INFRASTRUCTURE AND ARE NOT INCLUDED IN THIS CONTRACT.

0 10' 20'
APPROXIMATE SCALE IN FEET

THIS BAR REPRESENTS ONE INCH ON THE ORIGINAL DRAWING: USE TO VERIFY FIGURE REPRODUCTION SCALE

No.	Date	Revisions	By	Ckd

THIS DRAWING IS THE PROPERTY OF THE ARCADIS ENTITY IDENTIFIED IN THE TITLE BLOCK AND MAY NOT BE REUSED OR ALTERED IN WHOLE OR IN PART WITHOUT THE EXPRESS WRITTEN PERMISSION OF SAME.

Professional Engineer's Name
Professional Engineer's No.
State | Date Signed | Project Mgr.
Designed by | Drawn by A.SANCHEZ | Checked by

ARCADIS Design & Consultancy for natural and built assets
ARCADIS OF NEW YORK, INC.
NO ALTERATIONS PERMITTED HEREON EXCEPT AS PROVIDED UNDER SECTION 7209 SUBDIVISION 2 OF THE NEW YORK STATE EDUCATION LAW

NORTHROP GRUMMAN SYSTEMS CORPORATION • OPERABLE UNIT 3 • BETHPAGE, NEW YORK
AREA 21 - 60% REMEDIAL DESIGN

RECOVERY WELL SITE PLANS

CIVIL

ARCADIS Project No. NY001496.2415.R33E3
Date AUGUST 2016
ARCADIS
2 HUNTINGTON QUADRANGLE
SUITE 1S10
MELVILLE, NEW YORK
TEL. 631.249.7600

C-3

CITY: DIV/GROUP: DB: LD: PIC: PM: TM: LYR:ON=*;OFF=*REF*
Z:\ENVCAD\SYRACUSE\ACT\NY001496\2415\R34E31496R33E3C01.dwg LAYOUT: C-3 SAVED: 9/2/2016 6:18 PM ACADVER: 19.1S (LMS TECH) PAGESETUP: ---- PLOTSTYLETABLE: ---- PLOTTED: 9/2/2016 6:25 PM BY: SANCHEZ, ADRIAN
XREFS: XBDR-C-LD XR33E302 XR33E3-GISinfo XProfiles XProConvayLinesR3 XRW-21ETUMUpdate08-05-16 XTreatPlan XTreatPlant-GISContours
IMAGES:
PROJECTNAME: ----

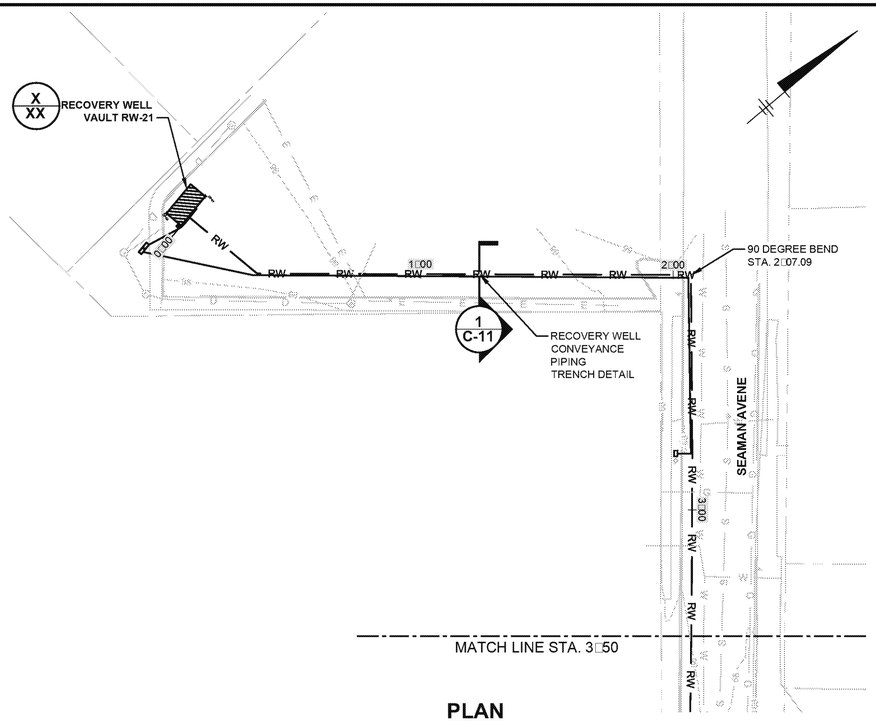

PLAN

LEGEND:

- PARCEL/LOT LINE
- EXISTING GRADE CONTOUR (1-FOOT INTERVAL)
- FENCE
- DRAINAGE LINE
- DRAINAGE MANHOLE
- ELECTRICAL LINE
- ELECTRICAL MANHOLE
- GAS LINE
- SANITARY LINE
- SANITARY MANHOLE
- TELEPHONE LINE
- WATER LINE
- STORM DRAIN LINE
- VEGETATION
- 3+00 RW — NEW RECOVERY WELL CONVEYANCE PIPE
- E — NEW ELECTRICAL LINE

NOTES:

1. REFER TO DRAWING C-1 FOR BASEMAP AND ADDITIONAL LEGEND INFORMATION.
2. NEW PIPELINE WILL CONSIST OF APPROXIMATELY 3,260 LINEAR FEET OF DUAL-WALL, HIGH-DENSITY POLYETHYLENE (HDPE) PIPE. THE DUAL WALL PIPE WILL BE 8-INCH DIAMETER SDR 17 PE4710 (202 PSI RATED) INNER PIPE AND AN OUTER 12-INCH DIAMETER SDR 17 PE4710 CONTAINMENT PIPE (202 PSI RATED). THE PIPE WILL BE INSTALLED AT A DEPTH OF MINIMUM 4.5-FEET BELOW LAND SURFACE (TOP OF PIPE) AS SHOWN ON DETAILS 1 THROUGH 3. SEE DRAWING E-1 FOR ELECTRICAL SITE LAYOUT. PIPELINE BENDING IS BASED ON MINIMUM BEND RADIUS OF 50 TIMES THE OUTSIDE DIAMETER OF PE4710 DR17 PIPE. MINIMUM BEND RADIUS FOR 12-INCH PIPE IS 53.1-FEET.
3. UNDERGROUND UTILITIES WILL BE EXPOSED PRIOR TO PIPELINE INSTALLATION. APPROXIMATE UTILITY CROSSING DETAIL WILL BE DEVELOPED AFTER UTILITY DEPTH HAS BEEN DETERMINED.
4. END CAP TO BE INSTALLED UPON COMPLETION OF PHASE I - SEAMAN AVE CONSTRUCTION AND REMOVED AT THE START OF PIPELINE CONSTRUCTION ON CENTRAL AVE.
5. GRAY SHADED ITEMS REPRESENT EXISTING CONDITIONS/INFRASTRUCTURE AND ARE NOT INCLUDED IN THIS CONTRACT.

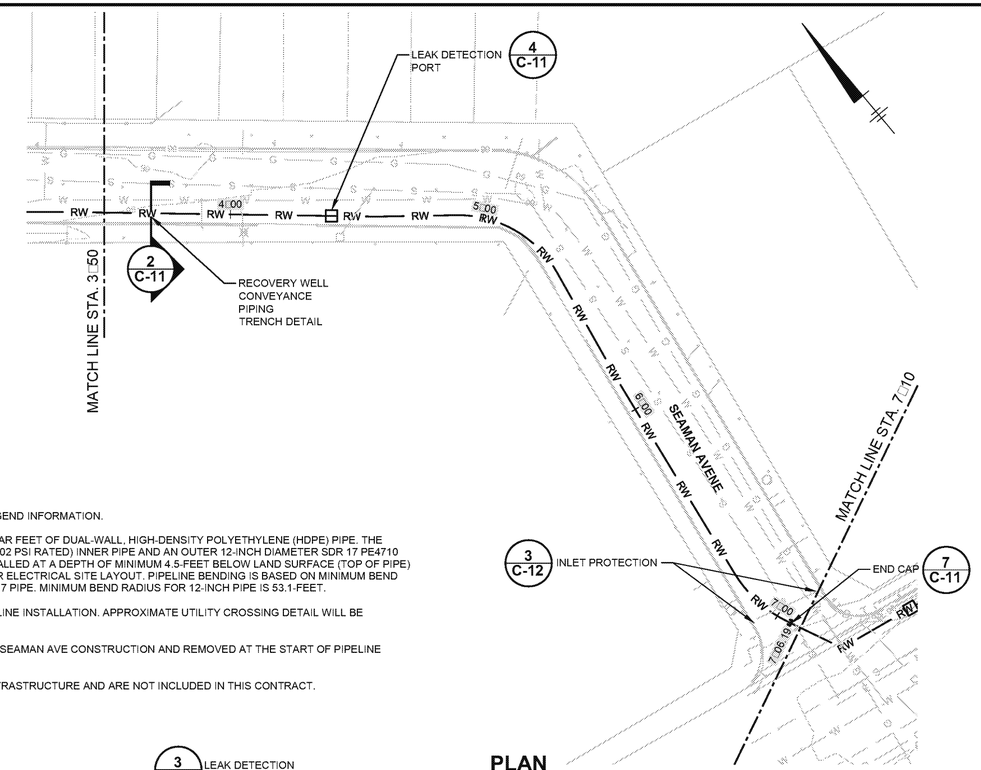

PLAN

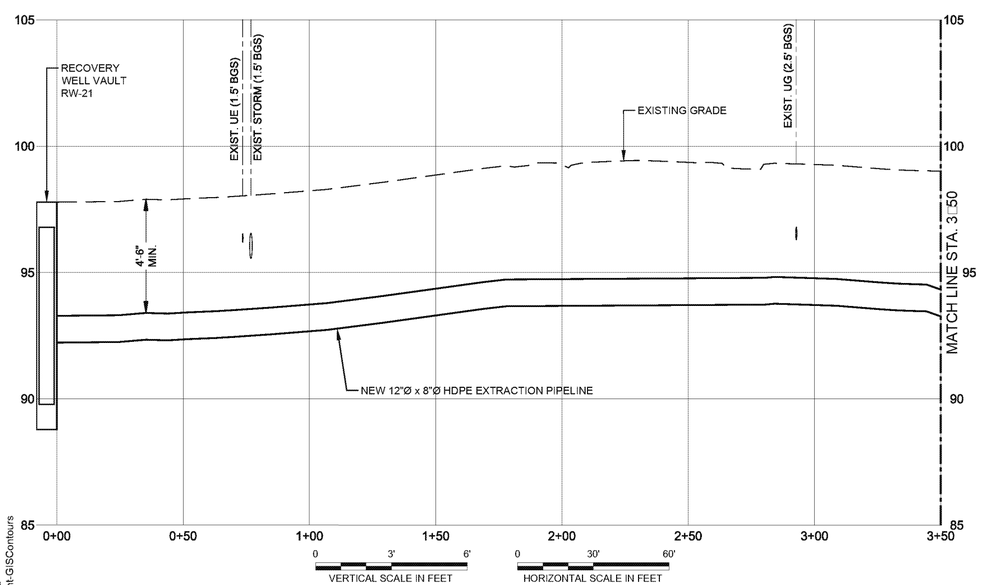

PROFILE

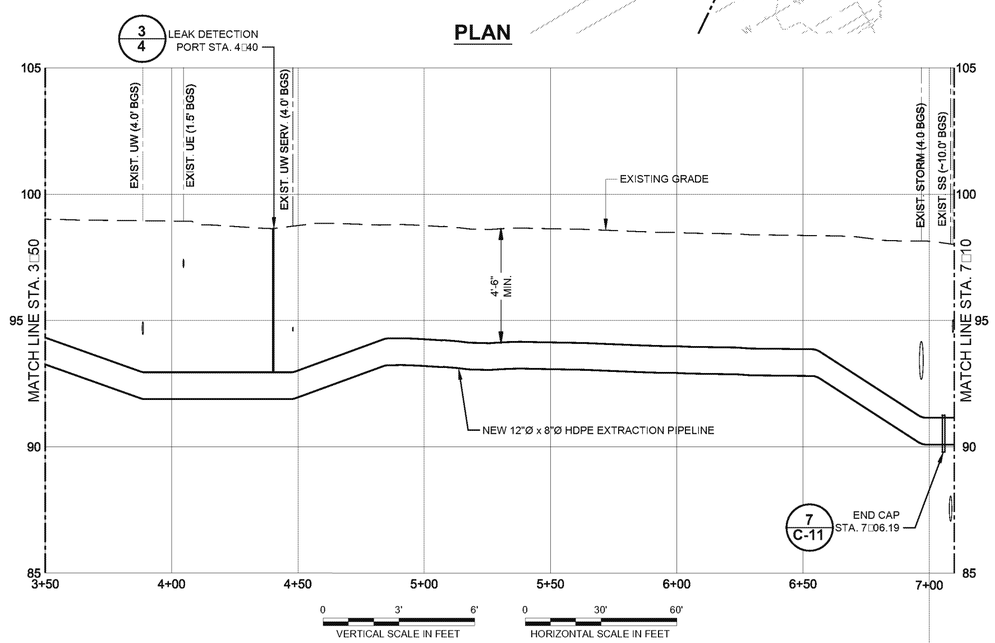

PROFILE

CITY: DIV/GROUP: DB: LD: PIC: PM: TM: LYR:ON=*;OFF=*REF*
Z:\ENVCAD\SYRACUSE\ACT\NY001496\2415\R34E3\1496R33E3C01.dwg LAYOUT: C-4 SAVED: 9/2/2016 6:18 PM ACADVER: i9.1S (LMS TECH) PAGESETUP: ---- PLOTSTYLETABLE: ---- PLOTTED: 9/2/2016 6:26 PM BY: SANCHEZ, ADRIAN
XREFS: XIBDR-C-LD XIR33E302 XIR33E3-GISinfo XIProfiles XIProConvayLinesR3 XIRW-21EIUIUpdate08-05-16 XTreatArea XTreatPlant-GISContours IMAGES: PROJECTNAME: ----

0 30' 60'
APPROXIMATE SCALE IN FEET

THIS BAR REPRESENTS ONE INCH ON THE ORIGINAL DRAWING: USE TO VERIFY FIGURE REPRODUCTION SCALE

No.	Date	Revisions	By	Ckd

THIS DRAWING IS THE PROPERTY OF THE ARCADIS ENTITY IDENTIFIED IN THE TITLE BLOCK AND MAY NOT BE REUSED OR ALTERED IN WHOLE OR IN PART WITHOUT THE EXPRESS WRITTEN PERMISSION OF SAME.

Professional Engineer's Name		
Professional Engineer's No.		
State	Date Signed	Project Mgr.
Designed by	Drawn by A.SANCHEZ	Checked by

ARCADIS Design & Consultancy for natural and built assets
ARCADIS OF NEW YORK, INC.

NO ALTERATIONS PERMITTED HEREON EXCEPT AS PROVIDED UNDER SECTION 7209 SUBDIVISION 2 OF THE NEW YORK STATE EDUCATION LAW

NORTHROP GRUMMAN SYSTEMS CORPORATION • OPERABLE UNIT 3 • BETHPAGE, NEW YORK
AREA 21 - 60% REMEDIAL DESIGN

CONVEYANCE PIPELINE PLAN/PROFILE RW-21 (STA. 0+00 - 3+50 & 3+50 - 7+10)

CIVIL

ARCADIS Project No. NY001496.2415.R33E3
Date AUGUST 2016

ARCADIS
2 HUNTINGTON QUADRANGLE
SUITE 1S10
MELVILLE, NEW YORK
TEL. 631.249.7600

C-4

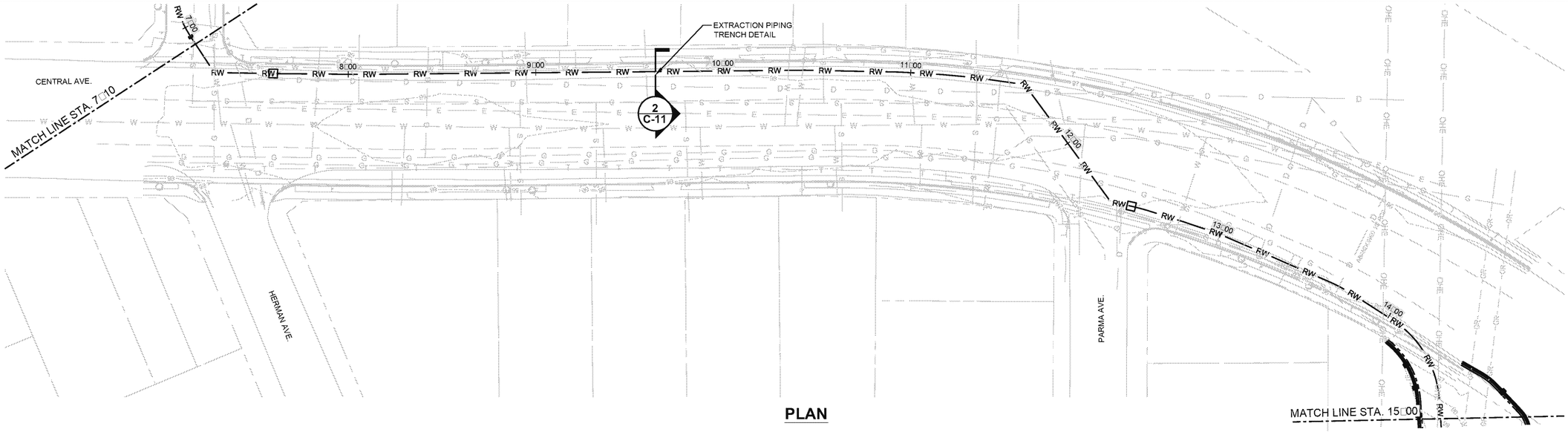

PLAN

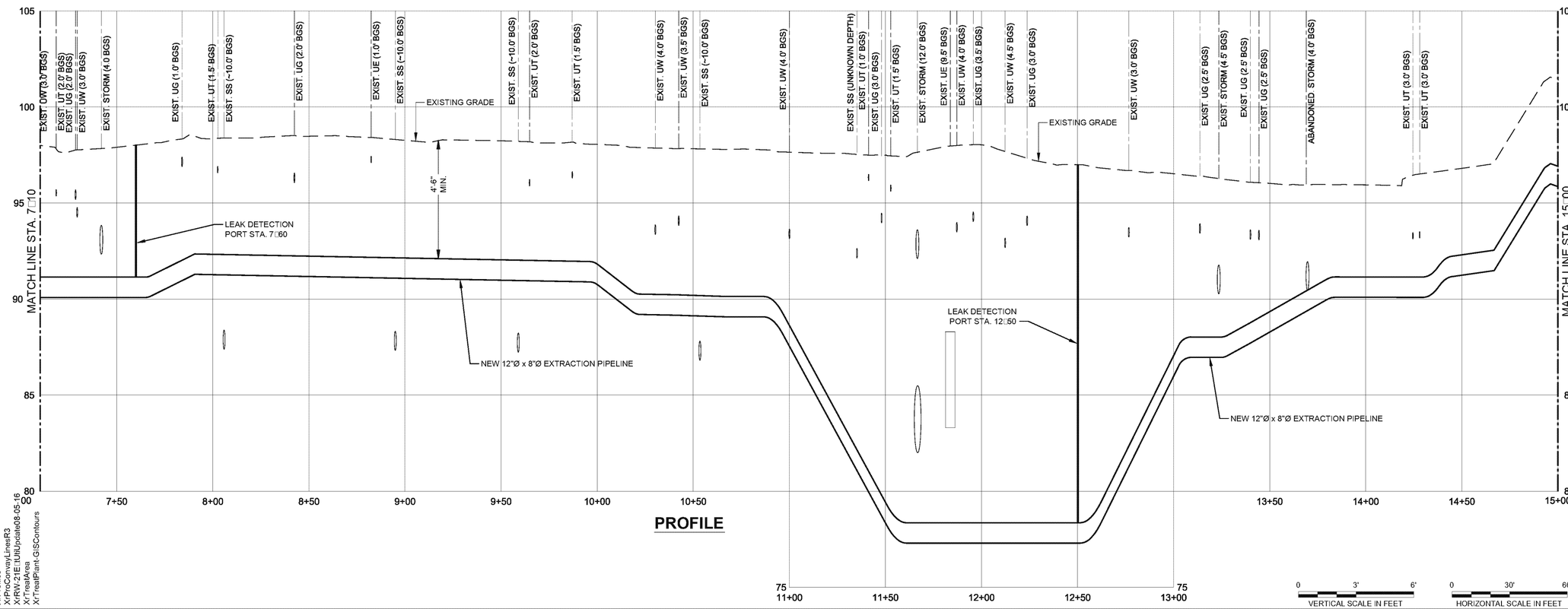

PROFILE

0 3' 6'
VERTICAL SCALE IN FEET

0 30' 60'
HORIZONTAL SCALE IN FEET

LEGEND:

- PARCEL/LOT LINE
- EXISTING GRADE CONTOUR (1-FOOT INTERVAL)
- FENCE
- DRAINAGE LINE
- DRAINAGE MANHOLE
- ELECTRICAL LINE
- ELECTRICAL MANHOLE
- EXTENT OF OVERHEAD ELECTRICAL LINES
- ELECTRICAL GROUNDING LINE
- GAS LINE
- SANITARY LINE
- SANITARY MANHOLE
- TELEPHONE LINE
- WATER LINE
- STORM DRAIN LINE
- VEGETATION
- 8+00 RW — NEW RECOVERY WELL CONVEYANCE WATER PIPE
- LIMITS OF DISTURBANCE
- SILT FENCE 2 C-12

NOTES:

1. REFER TO DRAWING C-1 FOR BASEMAP AND ADDITIONAL LEGEND INFORMATION.
2. NEW PIPELINE WILL CONSIST OF APPROXIMATELY 3,260 LINEAR FEET OF DUAL-WALL, HIGH-DENSITY POLYETHYLENE (HDPE) PIPE. THE DUAL WALL PIPE WILL BE 8-INCH DIAMETER SDR 17 PE4710 (202 PSI RATED) INNER PIPE AND AN OUTER 12-INCH DIAMETER SDR 17 PE4710 CONTAINMENT PIPE (202 PSI RATED). THE PIPE WILL BE INSTALLED AT A DEPTH OF MINIMUM 4.5-FEET BELOW LAND SURFACE (BOTTOM OF PIPE) AS SHOWN ON DETAILS 1 THROUGH 3. SEE DRAWING E-1 FOR ELECTRICAL SITE LAYOUT. PIPELINE BENDING IS BASED ON MINIMUM BEND RADIUS OF 50 TIMES THE OUTSIDE DIAMETER OF PE4710 DR17 PIPE. MINIMUM BEND RADIUS FOR 12-INCH PIPE IS 53.1-FEET.
3. UNDERGROUND UTILITIES WILL BE EXPOSED PRIOR TO PIPELINE INSTALLATION. APPROXIMATE UTILITY CROSSING DETAIL WILL BE DEVELOPED AFTER UTILITY DEPTH HAS BEEN DETERMINED.
4. END CAP TO BE INSTALLED UPON COMPLETION OF INTERVAL PHASE - SEAMAN AVE CONSTRUCTION AND REMOVED AT THE START OF PIPELINE CONSTRUCTION ON CENTRAL AVE.
5. GRAY SHADED ITEMS REPRESENT EXISTING CONDITIONS/INFRASTRUCTURE AND ARE NOT INCLUDED IN THIS CONTRACT.
6. CLEAR AND GRUB WITHIN THE LIMITS OF DISTURBANCE AS NEEDED TO IMPLEMENT THE WORK.

0 30' 60'
APPROXIMATE SCALE IN FEET

THIS BAR REPRESENTS ONE INCH ON THE ORIGINAL DRAWING: USE TO VERIFY FIGURE REPRODUCTION SCALE

No.	Date	Revisions	By	Ckd

THIS DRAWING IS THE PROPERTY OF THE ARCADIS ENTITY IDENTIFIED IN THE TITLE BLOCK AND MAY NOT BE REUSED OR ALTERED IN WHOLE OR IN PART WITHOUT THE EXPRESS WRITTEN PERMISSION OF SAME.

Professional Engineer's Name		
Professional Engineer's No.		
State	Date Signed	Project Mgr.
Designed by	Drawn by A.SANCHEZ	Checked by

ARCADIS Design & Consultancy for natural and built assets

ARCADIS OF NEW YORK, INC.

NO ALTERATIONS PERMITTED HEREON EXCEPT AS PROVIDED UNDER SECTION 7209 SUBDIVISION 2 OF THE NEW YORK STATE EDUCATION LAW

NORTHROP GRUMMAN SYSTEMS CORPORATION • OPERABLE UNIT 3 • BETHPAGE, NEW YORK

AREA 21 - 60% REMEDIAL DESIGN

CONVEYANCE PIPELINE PLAN/PROFILE RW-21 (STA. 7+10 -15+00)

CIVIL

ARCADIS Project No. NY001496.2415.R33E3

Date AUGUST 2016

ARCADIS
2 HUNTINGTON QUADRANGLE
SUITE 1S10
MELVILLE, NEW YORK
TEL. 631.249.7600

C-5

CITY: DIV/GROUP: DB: LD: PIC: PM: TM: LYR:ON=*;OFF=*REF*
Z:\ENVCAD\SYRACUSE\ACT\NY001496\2415\R34E\31496R33E3C01.dwg LAYOUT: C-5 SAVED: 9/2/2016 6:18 PM ACADVER: 19.1S (LMS TECH) PAGESETUP: ---- PLOTSTYLETABLE: ---- PLOTTED: 9/2/2016 6:26 PM BY: SANCHEZ, ADRIAN
XREFS: XBDR-C-LD XR33E302 XR33E3-GISinfo XProfiles XProConvayLinesR3 XRW-21EIUIUpdate08-05-16 XTreatArea XTreatPlant-GISContours
IMAGES:
PROJECTNAME: ----

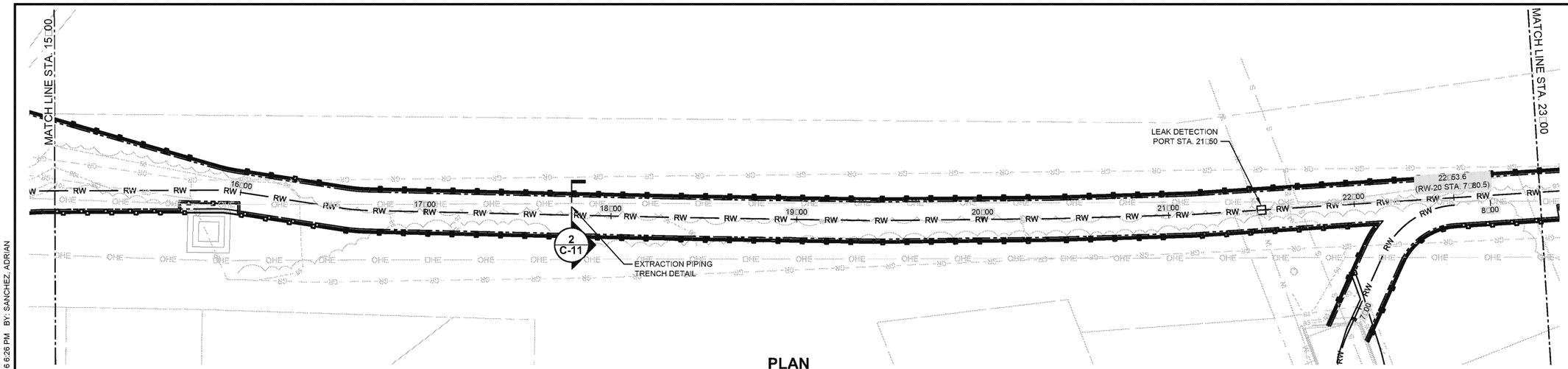

PLAN

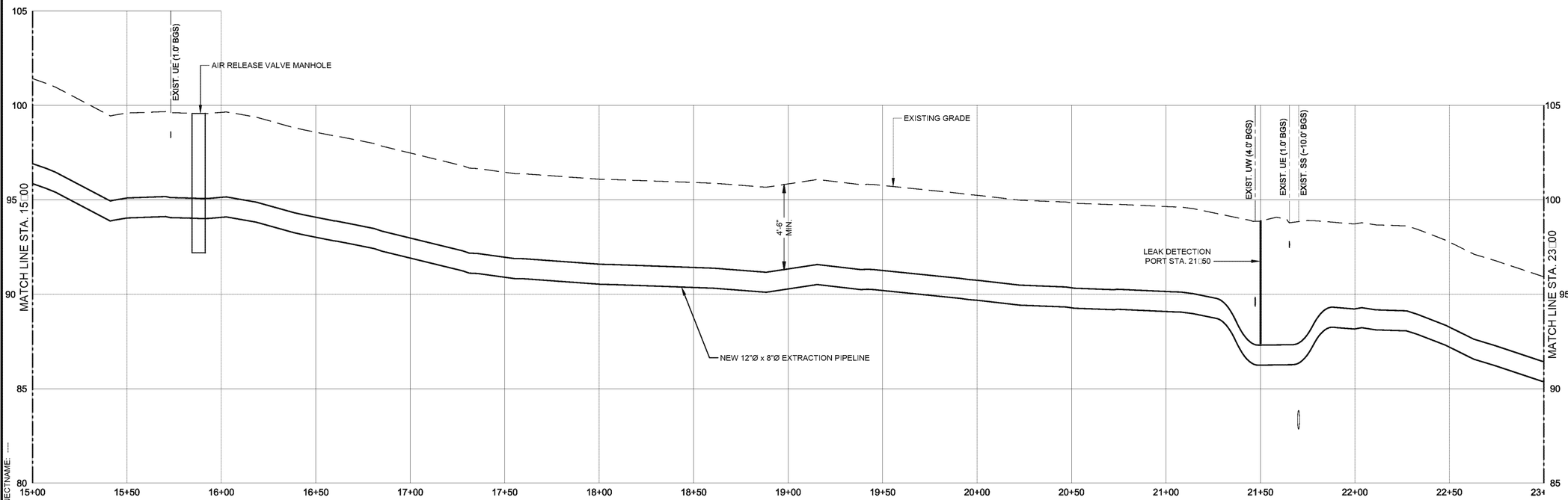

0 3' 6' VERTICAL SCALE IN FEET

0 30' 60' HORIZONTAL SCALE IN FEET

PROFILE

LEGEND:

- PARCEL/LOT LINE
- EXISTING GRADE CONTOUR (1-FOOT INTERVAL)
- FENCE
- DRAINAGE LINE
- DRAINAGE MANHOLE
- ELECTRICAL LINE
- ELECTRICAL MANHOLE
- EXTENT OF OVERHEAD ELECTRICAL LINES
- ELECTRICAL GROUNDING LINE
- GAS LINE
- SANITARY LINE
- SANITARY MANHOLE
- TELEPHONE LINE
- WATER LINE
- STORM DRAIN LINE
- VEGETATION
- 16+00 RW — NEW RECOVERY WELL CONVEYANCE WATER PIPE (RW-21)
- 7+00 RW — NEW RECOVERY WELL CONVEYANCE WATER PIPE (RW-20)
- LIMITS OF DISTURBANCE
- SILT FENCE 2 C-12

NOTES:

1. REFER TO DRAWING C-1 FOR BASEMAP AND ADDITIONAL LEGEND INFORMATION.
2. NEW PIPELINE WILL CONSIST OF APPROXIMATELY 3,260LINEAR FEET OF DUAL-WALL, HIGH-DENSITY POLYETHYLENE (HDPE) PIPE. THE DUAL WALL PIPE WILL BE 8-INCH DIAMETER SDR 17 PE4710 (202 PSI RATED) INNER PIPE AND AN OUTER 12-INCH DIAMETER SDR 17 PE4710 CONTAINMENT PIPE (202 PSI RATED). THE PIPE WILL BE INSTALLED AT A DEPTH OF MINIMUM 4.5-FEET BELOW LAND SURFACE (TOP OF PIPE) AS SHOWN ON DETAILS 1 THROUGH 3. SEE DRAWING E-1 FOR ELECTRICAL SITE LAYOUT. PIPELINE BENDING IS BASED ON MINIMUM BEND RADIUS OF 50 TIMES THE OUTSIDE DIAMETER OF PE4710 DR17 PIPE. MINIMUM BEND RADIUS FOR 12-INCH PIPE IS 53.1-FEET.
3. UNDERGROUND UTILITIES WILL BE EXPOSED PRIOR TO PIPELINE INSTALLATION. APPROXIMATE UTILITY CROSSING DETAIL WILL BE DEVELOPED AFTER UTILITY DEPTH HAS BEEN DETERMINED.
4. END CAP TO BE INSTALLED UPON COMPLETION OF PHASE I - SEAMAN AVE CONSTRUCTION AND REMOVED AT THE START OF PIPELINE CONSTRUCTION ON CENTRAL AVE.
5. GRAY SHADED ITEMS REPRESENT EXISTING CONDITIONS/INFRASTRUCTURE AND ARE NOT INCLUDED IN THIS CONTRACT.
6. CLEAR AND GRUB WITHIN LIMITS OF DISTURBANCE AS NEEDED TO IMPLEMENT THE WORK.

0 30' 60' APPROXIMATE SCALE IN FEET

THIS BAR REPRESENTS ONE INCH ON THE ORIGINAL DRAWING: USE TO VERIFY FIGURE REPRODUCTION SCALE

No.	Date	Revisions	By	Ckd

THIS DRAWING IS THE PROPERTY OF THE ARCADIS ENTITY IDENTIFIED IN THE TITLE BLOCK AND MAY NOT BE REUSED OR ALTERED IN WHOLE OR IN PART WITHOUT THE EXPRESS WRITTEN PERMISSION OF SAME.

Professional Engineer's Name
Professional Engineer's No.
State | Date Signed | Project Mgr.
Designed by | Drawn by A.SANCHEZ | Checked by

ARCADIS Design & Consultancy for natural and built assets
ARCADIS OF NEW YORK, INC.
NO ALTERATIONS PERMITTED HEREON EXCEPT AS PROVIDED UNDER SECTION 7209 SUBDIVISION 2 OF THE NEW YORK STATE EDUCATION LAW

NORTHROP GRUMMAN SYSTEMS CORPORATION • OPERABLE UNIT 3 • BETHPAGE, NEW YORK
AREA 21 - 60% REMEDIAL DESIGN

CONVEYANCE PIPELINE PLAN/PROFILE RW-21 (STA. 15+00 - 23+00)

CIVIL

ARCADIS Project No. NY001496.2415.R33E3
Date AUGUST 2016
ARCADIS
2 HUNTINGTON QUADRANGLE
SUITE 1S10
MELVILLE, NEW YORK
TEL. 631.249.7600

C-6

CITY: DIV/GROUP: DB: LD: PIC: PM: TM: LYR:ON=*;OFF=*REF*
Z:\ENVCAD\SYRACUSE\ACT\NY001496\2415\R34E3\1496R33E3C01.dwg LAYOUT: C-6 SAVED: 9/2/2016 6:18 PM ACADVER: 19.1S (LMS TECH) PAGESETUP: ---- PLOTSTYLETABLE: ---- PLOTTED: 9/2/2016 6:26 PM BY: SANCHEZ, ADRIAN
XREFS: XBDR-C-LD XR33E302 XR33E3-GSinfo XProfiles XProConvayLinesR3 XRW-21EUTilUpdate08-05-16 XTreatMap XTreatPlant-GISContours
IMAGES:
PROJECTNAME: ----

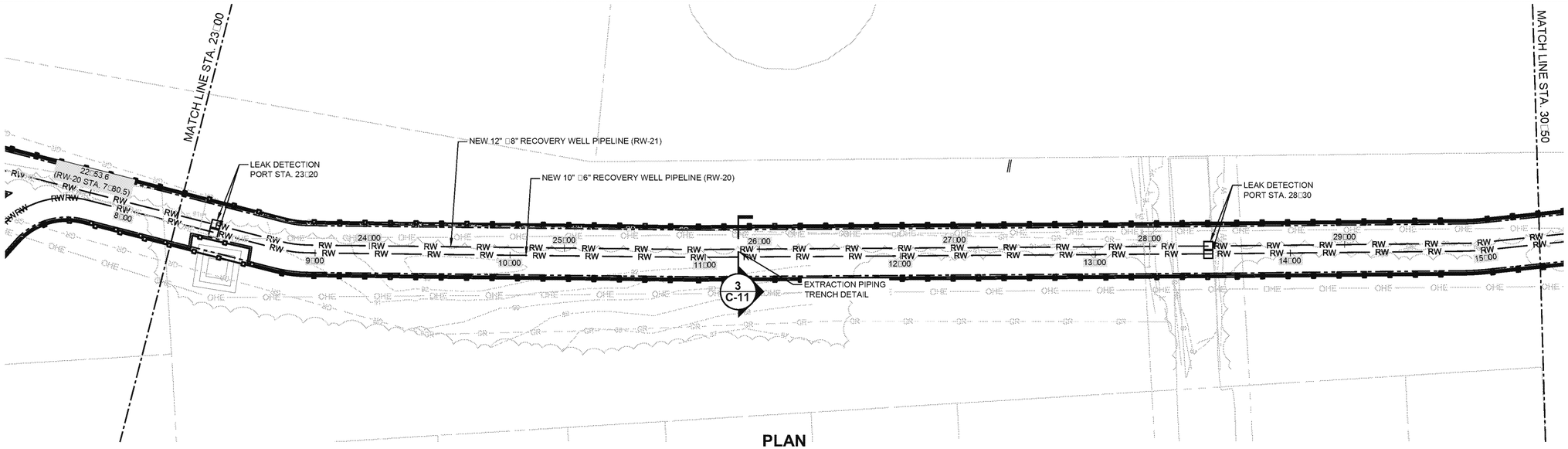

PLAN

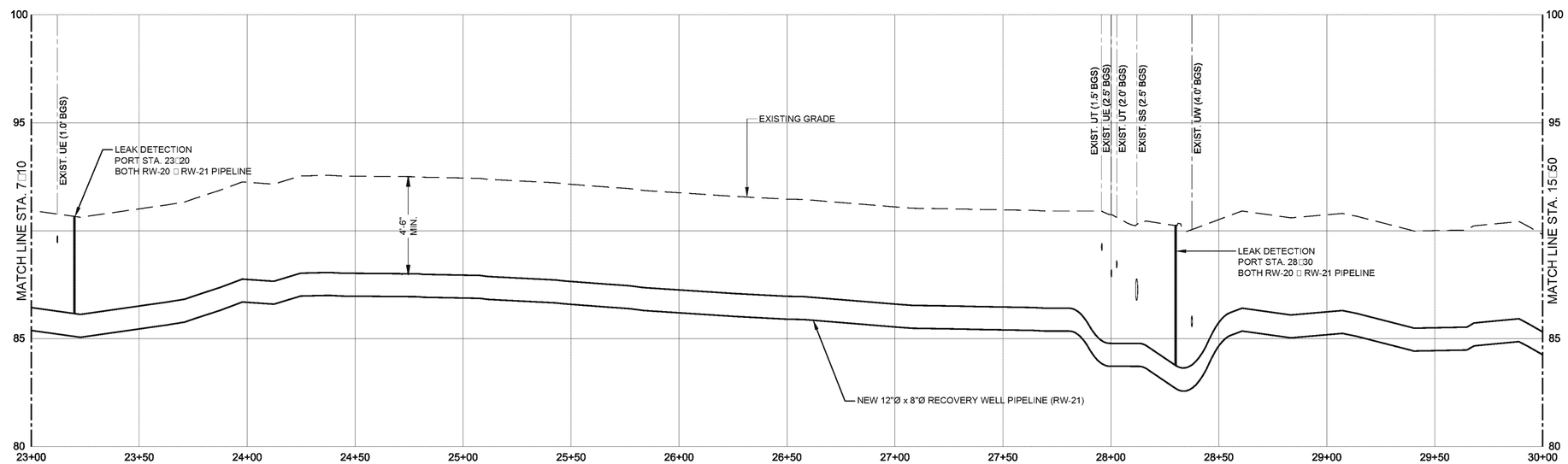

0 3' 6'
VERTICAL SCALE IN FEET

0 30' 60'
HORIZONTAL SCALE IN FEET

PROFILE

LEGEND:

- PARCEL/LOT LINE
- EXISTING GRADE CONTOUR (1-FOOT INTERVAL)
- FENCE
- DRAINAGE LINE
- DRAINAGE MANHOLE
- ELECTRICAL LINE
- ELECTRICAL MANHOLE
- GAS LINE
- SANITARY LINE
- SANITARY MANHOLE
- TELEPHONE LINE
- WATER LINE
- STORM DRAIN LINE
- VEGETATION
- 24□00 RW — NEW RECOVERY WELL CONVEYANCE WATER PIPE (RW-21)
- 8□00 RW — NEW RECOVERY WELL CONVEYANCE WATER PIPE (RW-20)
- LIMITS OF DISTURBANCE
- SILT FENCE

NOTES:

1. REFER TO DRAWING C-1 FOR BASEMAP AND ADDITIONAL LEGEND INFORMATION.
2. NEW PIPELINE WILL CONSIST OF APPROXIMATELY □□□LINEAR FEET OF DUAL-WALL, HIGH-DENSITY POLYETHYLENE (HDPE) PIPE. THE DUAL WALL PIPE WILL BE 8-INCH DIAMETER SDR 17 PE4710 (202 PSI RATED) INNER PIPE AND AN OUTER 12-INCH DIAMETER SDR 17 PE4710 CONTAINMENT PIPE (202 PSI RATED). THE PIPE WILL BE INSTALLED AT A DEPTH OF MINIMUM 4.5-FEET BELOW LAND SURFACE (TOP OF PIPE) AS SHOWN ON DETAILS 1 THROUGH 3. SEE DRAWING E-1 FOR ELECTRICAL SITE LAYOUT. PIPELINE BENDING IS BASED ON MINIMUM BEND RADIUS OF 50 TIMES THE OUTSIDE DIAMETER OF PE4710 DR17 PIPE. MINIMUM BEND RADIUS FOR 12-INCH PIPE IS 53.1-FEET.
3. UNDERGROUND UTILITIES WILL BE EXPOSED PRIOR TO PIPELINE INSTALLATION. APPROXIMATE UTILITY CROSSING DETAIL WILL BE DEVELOPED AFTER UTILITY DEPTH HAS BEEN DETERMINED.
4. END CAP TO BE INSTALLED UPON COMPLETION OF INTERVAL PHASE - SEAMAN AVE CONSTRUCTION AND REMOVED AT THE START OF PIPELINE CONSTRUCTION ON CENTRAL AVE.
5. GRAY SHADED ITEMS REPRESENT EXISTING CONDITIONS/INFRASTRUCTURE AND ARE NOT INCLUDED IN THIS CONTRACT.
6. CLEAR AND GRUB WITHIN THE LIMITS OF DISTURBANCE AS NEEDED TO IMPLEMENT THE WORK.
7. RECOVERY WELL PIPELINE RW-20 NOT SHOWN FOR CLARITY IN PROFILE.

0 30' 60'
APPROXIMATE SCALE IN FEET

THIS BAR REPRESENTS ONE INCH ON THE ORIGINAL DRAWING: USE TO VERIFY FIGURE REPRODUCTION SCALE

No.	Date	Revisions	By	Ckd

THIS DRAWING IS THE PROPERTY OF THE ARCADIS ENTITY IDENTIFIED IN THE TITLE BLOCK AND MAY NOT BE REUSED OR ALTERED IN WHOLE OR IN PART WITHOUT THE EXPRESS WRITTEN PERMISSION OF SAME.

Professional Engineer's Name		
Professional Engineer's No.		
State	Date Signed	Project Mgr.
Designed by	Drawn by A.SANCHEZ	Checked by

ARCADIS Design & Consultancy for natural and built assets
ARCADIS OF NEW YORK, INC.

NO ALTERATIONS PERMITTED HEREON EXCEPT AS PROVIDED UNDER SECTION 7209 SUBDIVISION 2 OF THE NEW YORK STATE EDUCATION LAW

NORTHROP GRUMMAN SYSTEMS CORPORATION ● OPERABLE UNIT 3 ● BETHPAGE, NEW YORK
AREA 21 - 60% REMEDIAL DESIGN

CONVEYANCE PIPELINE PLAN/PROFILE RW-21 (STA. 23+00 - 30+00)

CIVIL

ARCADIS Project No. NY001496.2415.R33E3
Date AUGUST 2016
ARCADIS
2 HUNTINGTON QUADRANGLE
SUITE 1S10
MELVILLE, NEW YORK
TEL. 631.249.7600

C-7

CITY: DIV/GROUP: DB: LD: PIC: PM: TM: LYR:ON=*;OFF=*REF*
Z:\ENVCAD\SYRACUSE\ACT\NY001496\2415\R34E3\11496R33E3C01.dwg LAYOUT: C-7 SAVED: 9/2/2016 6:18 PM ACADVER: 19.1S (LMS TECH) PAGESETUP: ---- PLOTSTYLETABLE: ---- PLOTTED: 9/2/2016 6:26 PM BY: SANCHEZ, ADRIAN
XREFS: XrBDR-C-LD XrR33E302 XrR33E3-GISinfo XrProfiles XrProConvayLinesR3 XrRW-21ETUIUpdate08-05-16 XrTreatPlan XrTreatPlant-GISContours
IMAGES: PROJECTNAME: ----

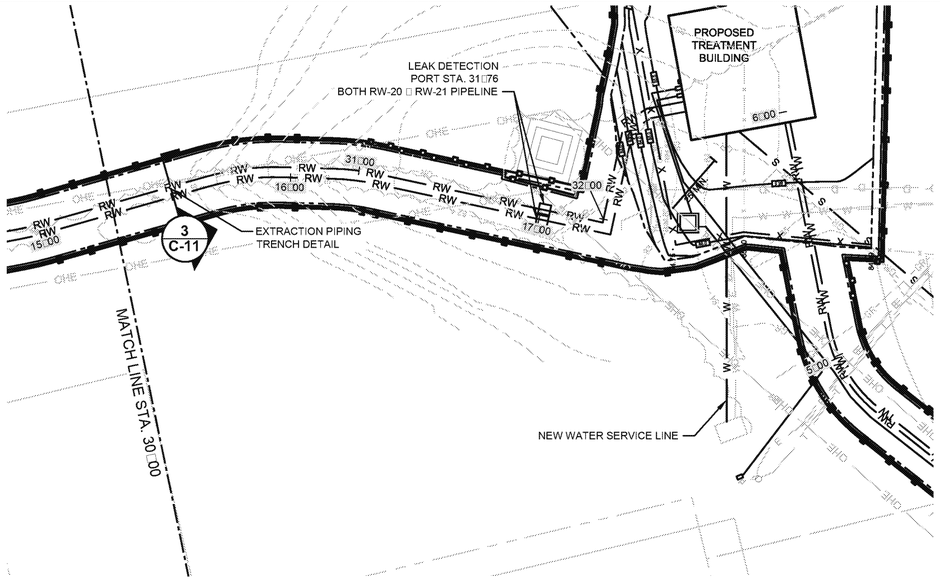

PLAN

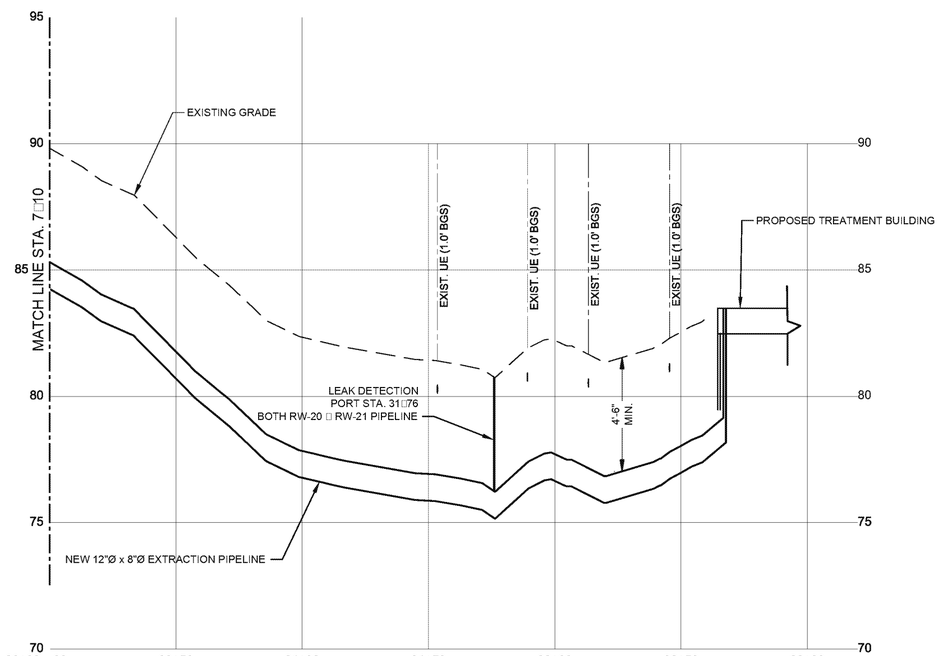

PROFILE

LEGEND:

- PARCEL/LOT LINE
- EXISTING GRADE CONTOUR (1-FOOT INTERVAL)
- FENCE
- DRAINAGE LINE
- DRAINAGE MANHOLE
- ELECTRICAL LINE
- ELECTRICAL MANHOLE
- GAS LINE
- SANITARY LINE
- SANITARY MANHOLE
- TELEPHONE LINE
- WATER LINE
- STORM DRAIN LINE
- GROUNDING WIRE
- VEGETATION
- 31+00 RW — NEW RECOVERY WELL CONVEYANCE WATER PIPE (RW-21)
- 15+00 RW — NEW RECOVERY WELL CONVEYANCE WATER PIPE (RW-20)
- 6+00 RW — NEW RECOVERY WELL CONVEYANCE WATER PIPE (RW-22)
- TW — NEW TREATED WATER LINE
- LIMITS OF DISTURBANCE
- SILT FENCE

NOTES:

1. REFER TO DRAWING C-1 FOR BASEMAP AND ADDITIONAL LEGEND INFORMATION.
2. NEW PIPELINE WILL CONSIST OF APPROXIMATELY [redacted] LINEAR FEET OF DUAL-WALL, HIGH-DENSITY POLYETHYLENE (HDPE) PIPE. THE DUAL WALL PIPE WILL BE 8-INCH DIAMETER SDR 17 PE4710 (202 PSI RATED) INNER PIPE AND AN OUTER 12-INCH DIAMETER SDR17 PE4710 CONTAINMENT PIPE (202 PSI RATED). THE PIPE WILL BE INSTALLED AT A DEPTH OF MINIMUM 4.5-FEET BELOW LAND SURFACE TOP OF PIPE) AS SHOWN ON DETAILS 1 THROUGH 3. SEE DRAWING E-1 FOR ELECTRICAL SITE LAYOUT. PIPELINE BENDING IS BASED ON MINIMUM BEND RADIUS OF 50 TIMES THE OUTSIDE DIAMETER OF PE4710 DR17 PIPE. MINIMUM BEND RADIUS FOR 12-INCH PIPE IS 53.1-FEET.
3. UNDERGROUND UTILITIES WILL BE EXPOSED PRIOR TO PIPELINE INSTALLATION. APPROXIMATE UTILITY CROSSING DETAIL WILL BE DEVELOPED AFTER UTILITY DEPTH HAS BEEN DETERMINED.
4. END CAP TO BE INSTALLED UPON COMPLETION OF INTERVAL PHASE - SEAMAN AVE CONSTRUCTION AND REMOVED AT THE START OF PIPELINE CONSTRUCTION ON CENTRAL AVE.
5. GRAY SHADED ITEMS REPRESENT EXISTING CONDITIONS//INFRASTRUCTURE AND ARE NOT INCLUDED IN THIS CONTRACT.
6. CLEAR AND GRUB WITHIN THE LIMITS OF DISTURBANCE AS NEEDED TO IMPLEMENT THE WORK.

CITY: DIV/GROUP: DB: LD: PIC: PM: TM: LYR:ON=*;OFF=*REF*
Z:\ENVCAD\SYRACUSE\ACT\NY001496\2415\R34E3\1496R33E3C01.dwg LAYOUT: C-8 SAVED: 9/2/2016 6:18 PM ACADVER: 19.1S (LMS TECH) PAGESETUP: ---- PLOTSTYLETABLE: ---- PLOTTED: 9/2/2016 6:27 PM BY: SANCHEZ, ADRIAN
XREFS: XrBDR-C-LD XrR33E302 XrR33E3-GISinfo XrProfiles XrProConvayLinesR3 XrRW-21ETIUUpdate08-05-16 XrTreatPlan XrTreatPlant-GISContours
IMAGES: PROJECTNAME: ----

0 30' 60'
APPROXIMATE SCALE IN FEET

THIS BAR REPRESENTS ONE INCH ON THE ORIGINAL DRAWING: USE TO VERIFY FIGURE REPRODUCTION SCALE

No.	Date	Revisions	By	Ckd

THIS DRAWING IS THE PROPERTY OF THE ARCADIS ENTITY IDENTIFIED IN THE TITLE BLOCK AND MAY NOT BE REUSED OR ALTERED IN WHOLE OR IN PART WITHOUT THE EXPRESS WRITTEN PERMISSION OF SAME.

Professional Engineer's Name
Professional Engineer's No.
State | Date Signed | Project Mgr.
Designed by | Drawn by A.SANCHEZ | Checked by

ARCADIS Design & Consultancy for natural and built assets
ARCADIS OF NEW YORK, INC.
NO ALTERATIONS PERMITTED HEREON EXCEPT AS PROVIDED UNDER SECTION 7209 SUBDIVISION 2 OF THE NEW YORK STATE EDUCATION LAW

NORTHROP GRUMMAN SYSTEMS CORPORATION ● OPERABLE UNIT 3 ● BETHPAGE, NEW YORK
AREA 21 - 60% REMEDIAL DESIGN

CONVEYANCE PIPELINE PLAN/PROFILE RW-21 (STA. 30+00 - 34+00)

CIVIL

ARCADIS Project No. NY001496.2415.R33E3
Date AUGUST 2016
ARCADIS
2 HUNTINGTON QUADRANGLE
SUITE 1S10
MELVILLE, NEW YORK
TEL. 631.249.7600

C-8

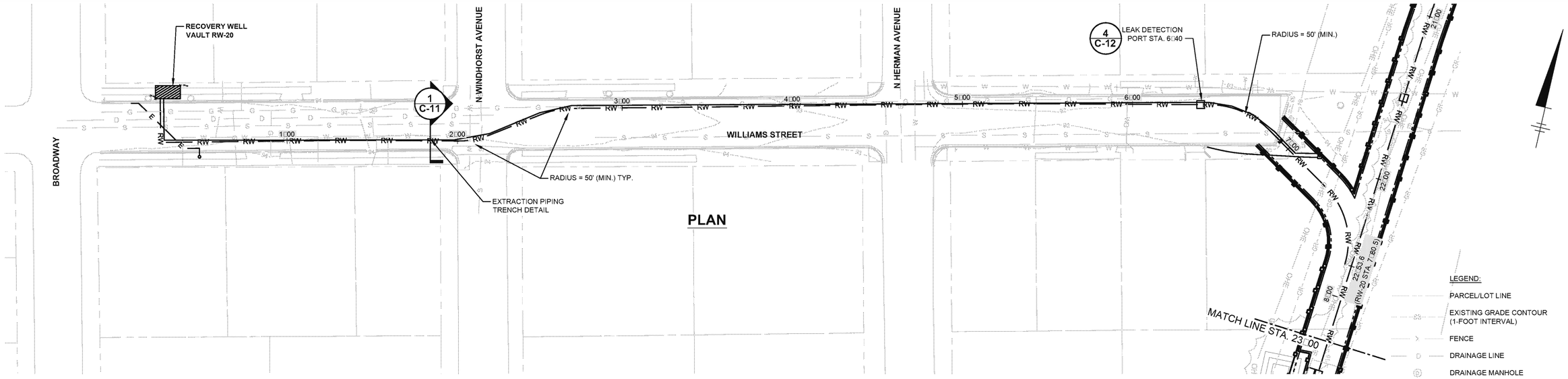

PLAN

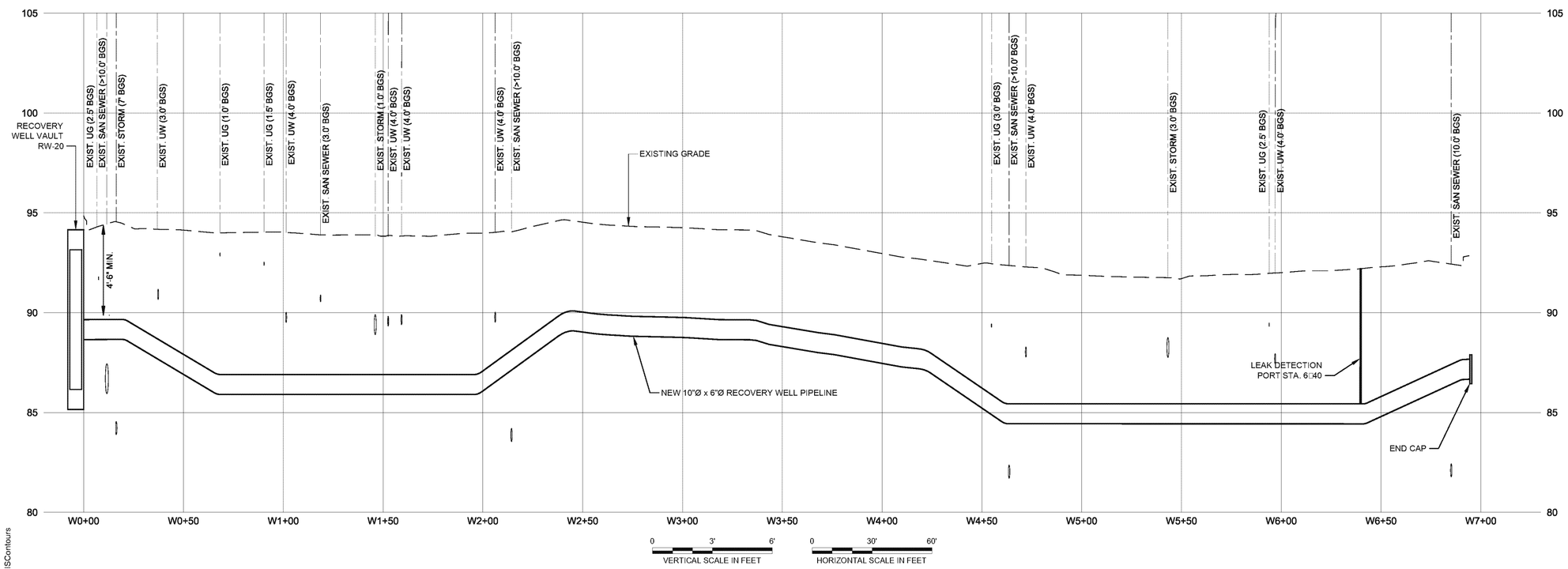

PROFILE

LEGEND:

- PARCEL/LOT LINE
- EXISTING GRADE CONTOUR (1-FOOT INTERVAL)
- FENCE
- DRAINAGE LINE
- DRAINAGE MANHOLE
- ELECTRICAL LINE
- ELECTRICAL MANHOLE
- GAS LINE
- SANITARY LINE
- SANITARY MANHOLE
- TELEPHONE LINE
- WATER LINE
- STORM DRAIN
- GROUNDING WIRE
- VEGETATION
- 1+00 RW — NEW RECOVERY WELL CONVEYANCE WATER PIPE (RW-20)
- 22+00 RW — NEW RECOVERY WELL CONVEYANCE WATER PIPE (RW-21)
- E — NEW ELECTRICAL LINE
- LIMITS OF DISTURBANCE

NOTES:

1. REFER TO DRAWING C-1 FOR BASEMAP AND ADDITIONAL LEGEND INFORMATION.
2. NEW PIPELINE WILL CONSIST OF APPROXIMATELY 690 LINEAR FEET OF DUAL-WALL, HIGH-DENSITY POLYETHYLENE (HDPE) PIPE. THE DUAL WALL PIPE WILL BE 8-INCH DIAMETER SDR 17 PE4710 (202 PSI RATED) INNER PIPE AND AN OUTER 12-INCH DIAMETER SDR 17 PE4710 CONTAINMENT PIPE (202 PSI RATED). THE PIPE WILL BE INSTALLED AT A DEPTH OF MINIMUM 4.5-FEET BELOW LAND SURFACE (TOP OF PIPE) AS SHOWN ON DETAILS 1 THROUGH 3. SEE DRAWING E-1 FOR ELECTRICAL SITE LAYOUT. PIPELINE BENDING IS BASED ON MINIMUM BEND RADIUS OF 50 TIMES THE OUTSIDE DIAMETER OF PE4710 DR17 PIPE. MINIMUM BEND RADIUS FOR 12-INCH PIPE IS 53.1-FEET.
3. UNDERGROUND UTILITIES WILL BE EXPOSED PRIOR TO PIPELINE INSTALLATION. APPROXIMATE UTILITY CROSSING DETAIL WILL BE DEVELOPED AFTER UTILITY DEPTH HAS BEEN DETERMINED.
4. END CAP TO BE INSTALLED UPON COMPLETION OF INTERVAL PHASE - WILLIAM ST CONSTRUCTION AND REMOVED AT THE START OF PIPELINE CONSTRUCTION ON CENTRAL AVE.
5. GRAY SHADED ITEMS REPRESENT EXISTING CONDITIONS/INFRASTRUCTURE AND ARE NOT INCLUDED IN THIS CONTRACT.
6. CLEAR AND GRUB WITHIN THE LIMITS OF DISTURBANCE AS NEEDED TO IMPLEMENT THE WORK.

0 30' 60'
APPROXIMATE SCALE IN FEET

THIS BAR REPRESENTS ONE INCH ON THE ORIGINAL DRAWING: USE TO VERIFY FIGURE REPRODUCTION SCALE

No.	Date	Revisions	By	Ckd

THIS DRAWING IS THE PROPERTY OF THE ARCADIS ENTITY IDENTIFIED IN THE TITLE BLOCK AND MAY NOT BE REUSED OR ALTERED IN WHOLE OR IN PART WITHOUT THE EXPRESS WRITTEN PERMISSION OF SAME.

Professional Engineer's Name		
Professional Engineer's No.		
State	Date Signed	Project Mgr.
Designed by	Drawn by A.SANCHEZ	Checked by

ARCADIS Design & Consultancy for natural and built assets

ARCADIS OF NEW YORK, INC.

NO ALTERATIONS PERMITTED HEREON EXCEPT AS PROVIDED UNDER SECTION 7209 SUBDIVISION 2 OF THE NEW YORK STATE EDUCATION LAW

NORTHROP GRUMMAN SYSTEMS CORPORATION • OPERABLE UNIT 3 • BETHPAGE, NEW YORK

AREA 21 - 60% REMEDIAL DESIGN

CONVEYANCE PIPELINE PLAN/PROFILE RW-20 (0+00 - 7+50)

CIVIL

ARCADIS Project No. NY001496.2415.R33E3

Date AUGUST 2016

ARCADIS
2 HUNTINGTON QUADRANGLE
SUITE 1S10
MELVILLE, NEW YORK
TEL. 631.249.7600

C-9

CITY: DIV/GROUP: DB: LD: PIC: PM: TM: LYR:ON=*;OFF=*REF*
Z:\ENVCAD\SYRACUSE\ACT\NY001496\2415\R34E3\1496R33E3C01.dwg LAYOUT: C-9 SAVED: 9/2/2016 6:18 PM ACADVER: 19.1S (LMS TECH) PAGESETUP: ---- PLOTSTYLETABLE: ---- PLOTTED: 9/2/2016 6:27 PM BY: SANCHEZ, ADRIAN
XREFS: XBDR-C-LD XR33E302 XR33E3-GISinfo XProfiles XProConvayLinesR3 XRW-21EUtilUpdate08-05-16 XTreatMatrix XTreatPlant-GISContours
IMAGES: PROJECTNAME: ----

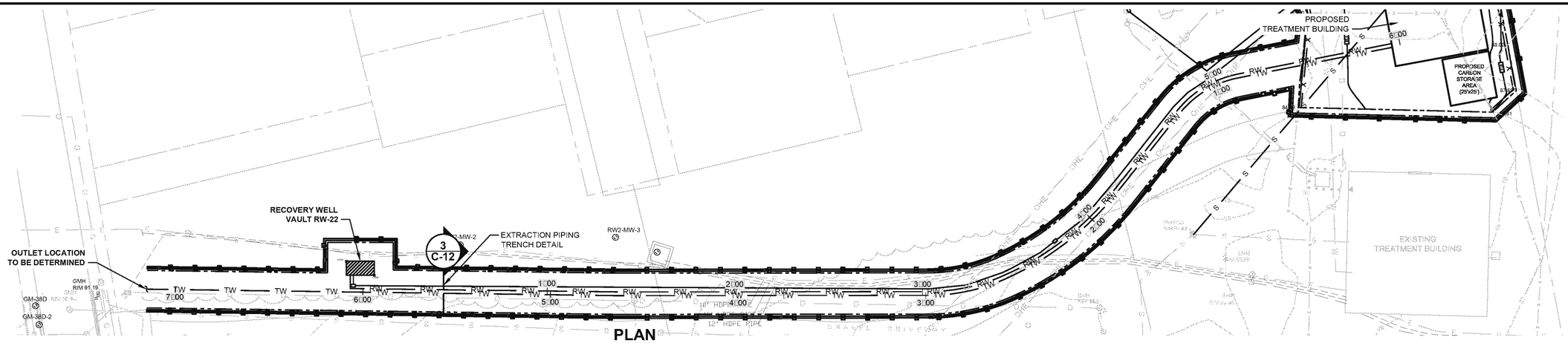

PLAN

LEGEND:

- PARCEL/LOT LINE
- EXISTING GRADE CONTOUR (1-FOOT INTERVAL)
- FENCE
- DRAINAGE LINE
- DRAINAGE MANHOLE
- ELECTRICAL LINE
- ELECTRICAL MANHOLE
- GAS LINE
- SANITARY LINE
- SANITARY MANHOLE
- TELEPHONE LINE
- WATER LINE
- STORM DRAIN LINE
- VEGETATION
- NEW RECOVERY WELL CONVEYANCE WATER PIPE
- NEW TREATED WATER LINE
- NEW ELECTRICAL LINE
- LIMITS OF DISTURBANCE

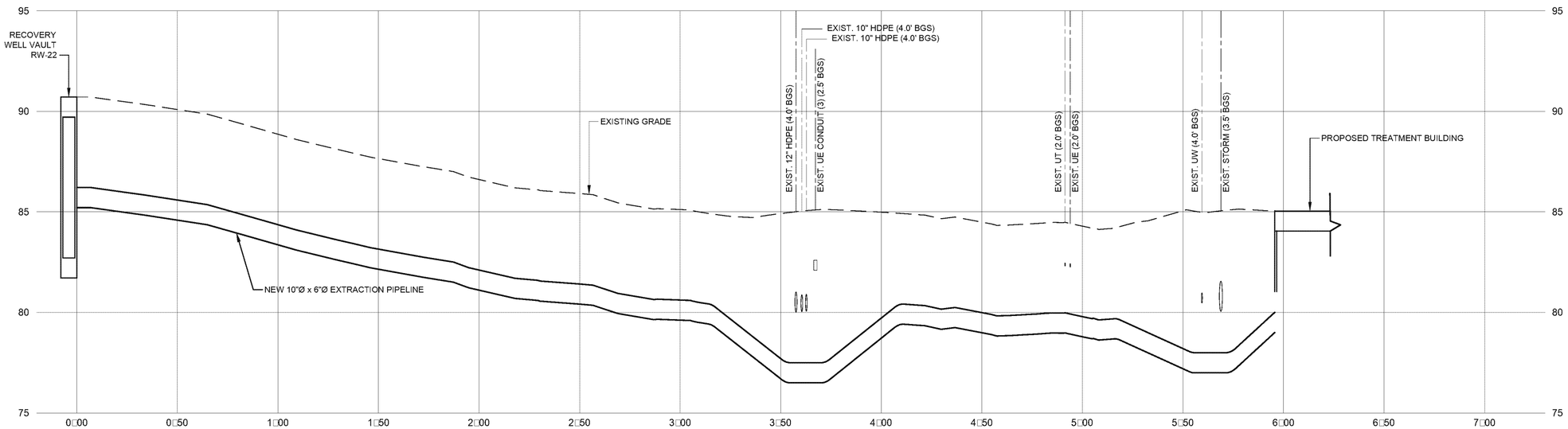

PROFILE

NOTES:

1. BASE MAP BY NELSON □ POPE, ENGINEERS □ SURVEYORS, 572 WALT WHITMAN ROAD, MELVILLE, N.Y. 11747, DATED JUNE 30, 2061, TITLED "TOPOGRAPHIC MAP", DRAWING No. 16129TS.DWG, AT A SCALE OF 1" = 40'.
2. LOCATION OF UNDERGROUND UTILITIES AND OTHER UNDERGROUND STRUCTURES ARE OBTAINED BY FIELD MEASUREMENTS WHERE POSSIBLE; OTHERWISE OBTAINED FROM OTHER SOURCES AND MAY BE APPROXIMATE ONLY. OTHER UNDERGROUND UTILITIES AND STRUCTURES MAY EXIST, THE LOCATION OF WHICH ARE PRESENTLY UNKNOWN.
3. NEW PIPELINE WILL CONSIST OF APPROXIMATELY XXX LINEAR FEET OF DUAL-WALL, HIGH-DENSITY POLYETHYLENE (HDPE) PIPE. THE DUAL WALL PIPE WILL BE 6-INCH DIAMETER SDR 17 PE4710 (202 PSI RATED) INNER PIPE AND AN OUTER 10-INCH DIAMETER SDR 17 PE4710 CONTAINMENT PIPE (202 PSI RATED), BETWEEN EW-1 AND TREATMENT BUILDING. THE PIPE WILL BE INSTALLED AT A DEPTH OF MINIMUM 5 FEET BELOW LAND SURFACE (TOP OF PIPE) AS SHOWN ON DETAILS 1 THROUGH 3. SEE DRAWING E-1 FOR ELECTRICAL SITE LAYOUT. PIPELINE BENDING IS BASED ON MINIMUM BEND RADIUS OF 25 TIMES THE OUTSIDE DIAMETER OF PE4710 DR17 PIPE. MINIMUM BEND RADIUS FOR 18-INCH PIPE IS 37.5-FEET, FOR 14-INCH PIPE IS 29.2-FEET.
4. UNDERGROUND UTILITIES WILL BE EXPOSED PRIOR TO PIPELINE INSTALLATION. APPROXIMATE UTILITY CROSSING DETAIL WILL BE DEVELOPED AFTER UTILITY DEPTH HAS BEEN DETERMINED.
5. PROPOSED TREATMENT DISCHARGE PIPELINE NOT SHOWN ON PROFILE, SIZING AND LOCATION TO BE DETERMINED.
6. GRAY SHADED ITEMS REPRESENT EXISTING CONDITIONS/INFRASTRUCTURE AND ARE NOT INCLUDED IN THIS CONTRACT.
7. CLEAR AND GRUB WITHIN THE LIMITS OF DISTURBANCE AS NEEDED TO IMPLEMENT THE WORK.

0 60' 120'
APPROXIMATE SCALE IN FEET

THIS BAR REPRESENTS ONE INCH ON THE ORIGINAL DRAWING: USE TO VERIFY FIGURE REPRODUCTION SCALE

No.	Date	Revisions	By	Ckd

THIS DRAWING IS THE PROPERTY OF THE ARCADIS ENTITY IDENTIFIED IN THE TITLE BLOCK AND MAY NOT BE REUSED OR ALTERED IN WHOLE OR IN PART WITHOUT THE EXPRESS WRITTEN PERMISSION OF SAME.

Professional Engineer's Name
Professional Engineer's No.
State | Date Signed | Project Mgr.
Designed by | Drawn by A.SANCHEZ | Checked by

ARCADIS Design & Consultancy for natural and built assets
ARCADIS OF NEW YORK, INC.
NO ALTERATIONS PERMITTED HEREON EXCEPT AS PROVIDED UNDER SECTION 7209 SUBDIVISION 2 OF THE NEW YORK STATE EDUCATION LAW

NORTHROP GRUMMAN SYSTEMS CORPORATION ● OPERABLE UNIT 3 ● BETHPAGE, NEW YORK
AREA 21 - 60% REMEDIAL DESIGN

CONVEYANCE PIPELINE PLAN/PROFILE RW-22 (0+00 - 8+00)

CIVIL

ARCADIS Project No. NY001496.2415.R33E3
Date AUGUST 2016
ARCADIS
2 HUNTINGTON QUADRANGLE
SUITE 1S10
MELVILLE, NEW YORK
TEL. 631.249.7600

C-10

CITY: DIV/GROUP: DB: LD: PIC: PM: TM: LYR:ON+*;OFF=*REF*
Z:\ENVCAD\SYRACUSE\ACTIVE\NY001496\2415\R34E3\11496R33E3C01.dwg LAYOUT: C-10 SAVED: 9/2/2016 6:18 PM ACADVER: 19.1S (LMS TECH) PAGESETUP: ---- PLOTSTYLETABLE: ---- PLOTTED: 9/2/2016 6:27 PM BY: SANCHEZ, ADRIAN
XREFS: IMAGES: PROJECTNAME: ----
X:\BDR-C-LD
X:\R33E302
X:\R33E3-GISInfo
X:\Profiles
X:\ProConveyLinesR3
X:\RW-21E1UtilUpdate08-05-16
X:\TreatPlan
X:\TreatPlantGISContours

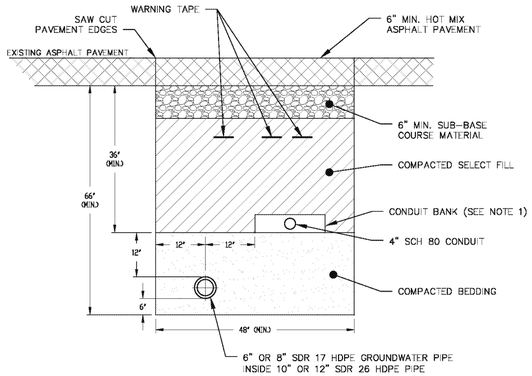

NOTE:
1. FINAL CONDUIT LOCATION TO BE DETERMINED.

EXTRACTION PIPING TRENCH WITH CONDUIT BANK (1)

NOT TO SCALE

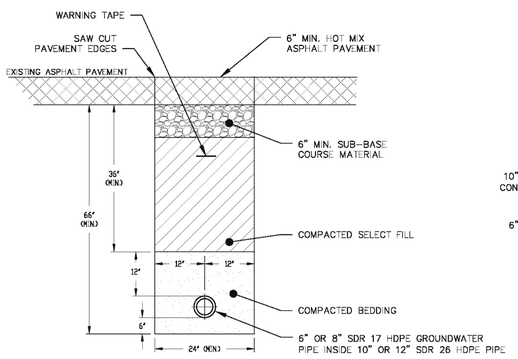

EXTRACTION PIPING TRENCH DETAIL (2)

NOT TO SCALE

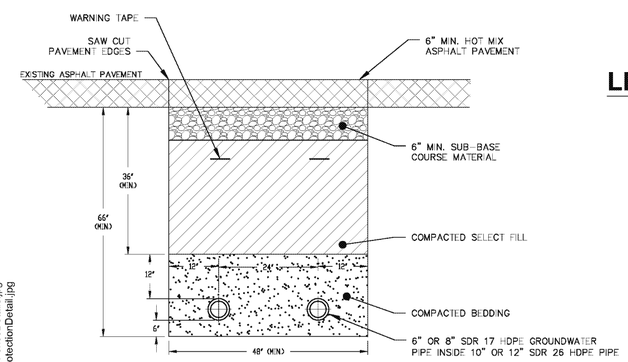

EXTRACTION PIPING TRENCH DETAIL (3)

NOT TO SCALE

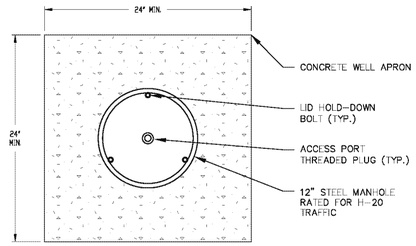

PLAN VIEW

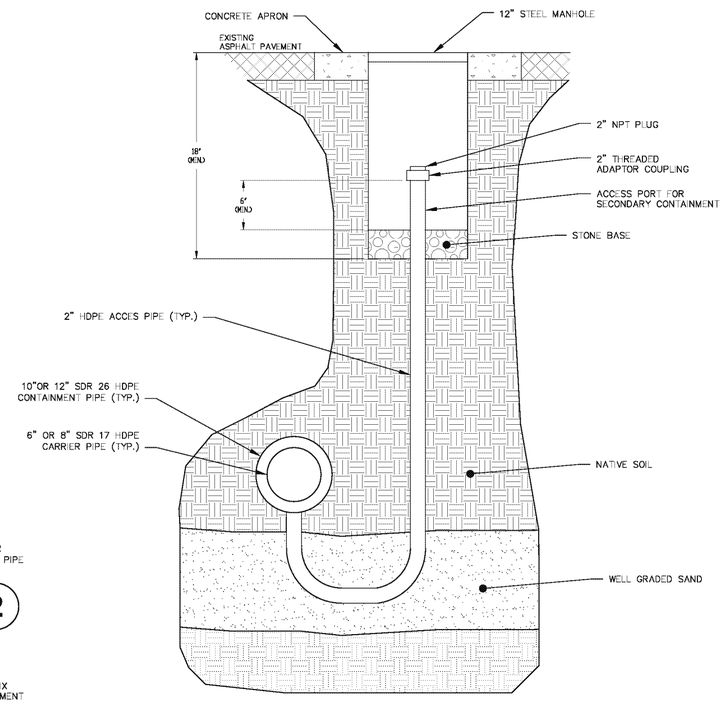

LEAK DETECTION ACCESS PORT DETAIL (4)

NOT TO SCALE

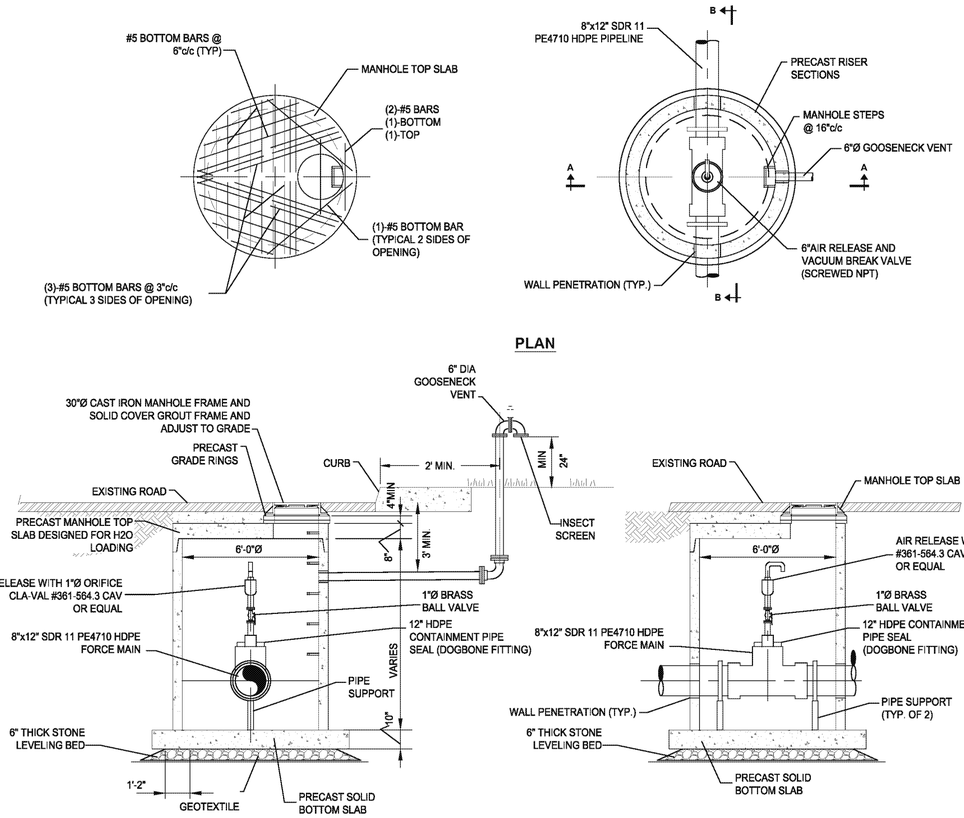

AIR RELEASE AND VACUUM BREAK VALVE MANHOLE DETAILS (5)

NOT TO SCALE

CITY: DIV/GROUP: DB: LD: PIC: PM: TM: LYR:ON=*;OFF=*REF*
C:\Local-G\ENVCAD\SYRACUSE\ACT\NY001496\2415\R33E3\1496R33E3C02.dwg LAYOUT: C-11 SAVED: 8/26/2016 10:47 AM ACADVER: 19.1S (LMS TECH) PAGESETUP: ---- PLOTSTYLETABLE: ---- PLOTTED: 8/26/2016 12:04 PM BY: SANCHEZ, ADRIAN
XREFS: IMAGES: PROJECTNAME: ----
XIBDR-C-LD Conc.CurbDetail.jpg
Conc.SidewalkDetail.jpg
GM-38FenceDetails.jpg
IntelProtectionDetail.jpg

0 30' 60'
APPROXIMATE SCALE IN FEET

THIS BAR REPRESENTS ONE INCH ON THE ORIGINAL DRAWING:

USE TO VERIFY FIGURE REPRODUCTION SCALE

No.	Date	Revisions	By	Ckd
	08.2016	60% DESIGN SUBMITTAL - ISSUED FOR BID		

THIS DRAWING IS THE PROPERTY OF THE ARCADIS ENTITY IDENTIFIED IN THE TITLE BLOCK AND MAY NOT BE REUSED OR ALTERED IN WHOLE OR IN PART WITHOUT THE EXPRESS WRITTEN PERMISSION OF SAME.

Professional Engineer's Name
Professional Engineer's No.
State | Date Signed | Project Mgr.
Designed by | Drawn by A.SANCHEZ | Checked by

ARCADIS Design & Consultancy for natural and built assets
ARCADIS OF NEW YORK, INC.
NO ALTERATIONS PERMITTED HEREON EXCEPT AS PROVIDED UNDER SECTION 7209 SUBDIVISION 2 OF THE NEW YORK STATE EDUCATION LAW

NORTHROP GRUMMAN SYSTEMS CORPORATION • OPERABLE UNIT 3 • BETHPAGE, NEW YORK
AREA 21 - 60% REMEDIAL DESIGN

PIPELINE DETAILS

GENERAL

ARCADIS Project No. NY001496.2415.R33E3
Date AUGUST 2016
ARCADIS
2 HUNTINGTON QUADRANGLE
SUITE 1S10
MELVILLE, NEW YORK
TEL. 631.249.7600

C-11

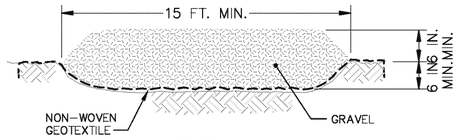

SECTION A-A

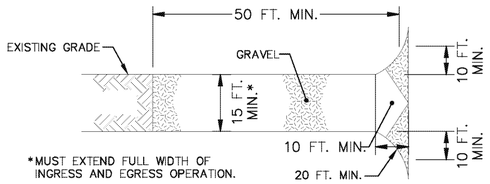

PLAN VIEW

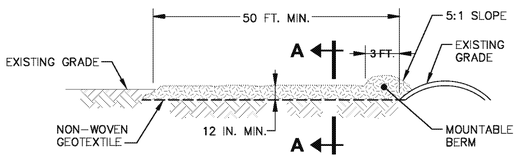

SIDE ELEVATION

NOTES:

1. STABILIZED CONSTRUCTION ENTRANCES SHALL BE INSTALLED AT ANY POINT OF ACCESS TO WORK AREAS, NOT ALREADY STABILIZED OR ACCESSIBLE (E.G. EXISTING ROADS).
2. PLAN DIMENSIONS OF CONSTRUCTION ENTRANCE ARE MINIMUMS.
3. PROVIDE HDPE CULVERT PIPES WHERE CONSTRUCTION ENTRANCE WOULD IMPEDE SURFACE DRAINAGE.

STABILIZED CONSTRUCTION ENTRANCE (1)

NOT TO SCALE

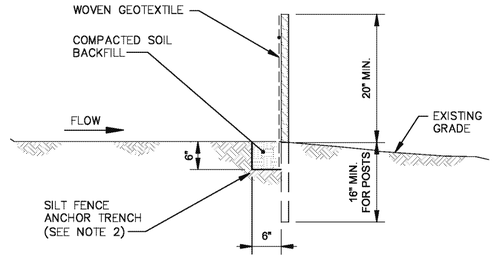

SECTION

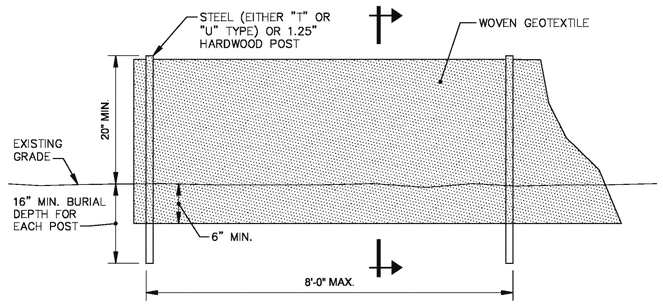

PROFILE

NOTES:

1. SEDIMENT DEPOSITS SHALL BE REMOVED WHEN "BULGES" DEVELOP IN SILT FENCE OR AS DIRECTED BY ENGINEER.
2. THE SILT FENCE SHALL BE FOLDED INTO A TRENCH AND BACKFILLED.
3. TEMPORARY EROSION AND SEDIMENT CONTROL MEASURES SHALL BE INSTALLED AND MAINTAINED IN ACCORDANCE WITH THE LATEST EDITION OF THE NEW YORK STATE STANDARDS AND SPECIFICATIONS FOR EROSION AND SEDIMENT CONTROL.

SILT FENCE (2)

NOT TO SCALE

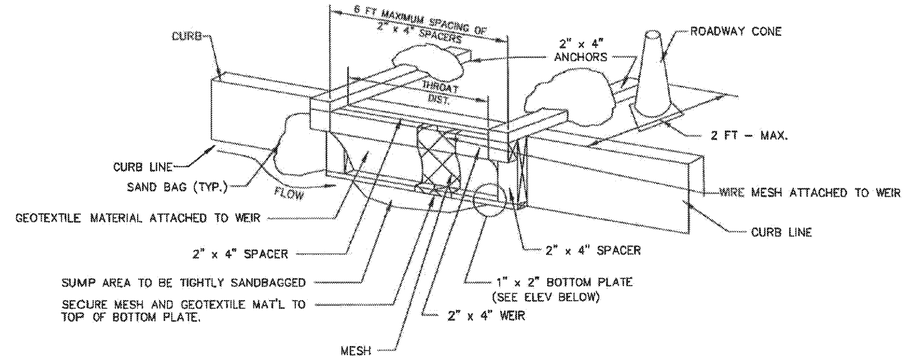

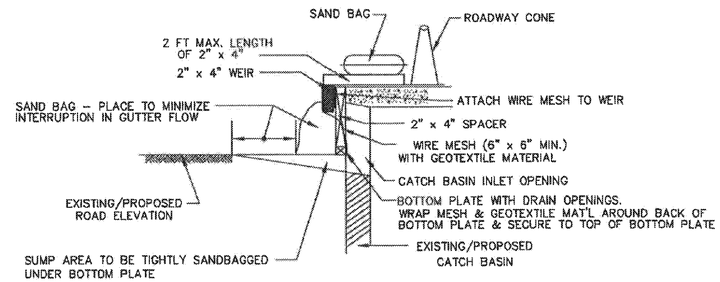

NOTES:

1. THE CONTRACTOR SHALL PLACE THE GEOTEXTILE MATERIAL AS SHOWN IN THE DETAILS.
2. THE GEOTEXTILE MATERIAL SHALL BE TIED TO THE 6" x 6" MESH WIRE WITH THE APPROPRIATE FASTENERS. THE WIRE MESH SHALL BE FASTENED BY NAILING, STAPLING, OR OTHER SATISFACTORY MEANS TO THE WOOD FRAME THAT WILL SUPPORT THE FABRIC AND WIRE. BOTH SHALL BE PLACED BETWEEN THE FRAME AND GRATE, ON THE STREET SIDE OF THE STRUCTURE AS DIRECTED BY THE ENGINEER.
3. THE WOODEN FRAME SHALL BE CONSTRUCTED WITH THE INTENT THAT IT WILL SUPPORT THE MATERIAL THAT WILL ACCUMULATE DURING THE LIFE OF THE CONTRACT OR AS DIRECTED BY THE ENGINEER.
4. THE WIRE MESH SHALL BE CONTINUOUS 4 FT MINIMUM WIDTH AND A LENGTH SUFFICIENT TO BE CONSTRUCTED AS SHOWN IN THE DETAIL. IT SHALL BE SECURE AND ATTACHED TO THE WOOD WEIR AS NOTED OR AS DIRECTED BY THE ENGINEER.
5. THE PROTECTION DEVICE SHALL BE PLACED AGAINST THE CURB INLET AND SECURED BY 2" x 4" ANCHORS 2 FT IN LENGTH, EXTENDING ACROSS THE TOP OF THE INLET, AND HELD IN PLACE BY THE SANDBAGS. ADDITIONAL SANDBAGS, AS SHOWN IN THE DETAIL, SHALL BE PLACED ON BOTH SIDES OF THE BASIN AND SHALL BE PLACED UP AGAINST THE CURB LINE ON EITHER EDGE OF THE SURFACE INLET.
6. THE INSTALLATION OF THIS FILTERING SYSTEM SHALL BE DONE PRIOR TO ANY EXCAVATION ON THE JOB THAT HAS THE POTENTIAL TO PRODUCE SEDIMENT RUNOFF, OR AS DIRECTED BY THE ENGINEER.

SILT PROTECTION FOR CURB INLET DRAINAGE STRUCTURES (3)

NOT TO SCALE

CITY: DIV/GROUP: DB: LD: PIC: PM: TM: LYR:ON=*;OFF=REF*
C:\Local-GIEN\CAD\SYRACUSE\ACT\NY001496\2415\R33E3\1496R33E3C02.dwg LAYOUT: C-12 SAVED: 8/26/2016 10:47 AM ACADVER: 19.1S (LMS TECH) PAGESETUP: ---- PLOTSTYLETABLE: ---- PLOTTED: 8/26/2016 12:04 PM BY: SANCHEZ, ADRIAN
XREFS: IMAGES: PROJECTNAME: ----
XrBDR-C-LD Conc.CurbDetail.jpg
Conc.SidewalkDetail.jpg
GM-38FenceDetails.jpg
InletProtectionDetail.jpg

0 30' 60'
APPROXIMATE SCALE IN FEET

THIS BAR REPRESENTS ONE INCH ON THE ORIGINAL DRAWING: USE TO VERIFY FIGURE REPRODUCTION SCALE

No.	Date	Revisions	By	Ckd
	08.2016	60% DESIGN SUBMITTAL - ISSUED FOR BID		

THIS DRAWING IS THE PROPERTY OF THE ARCADIS ENTITY IDENTIFIED IN THE TITLE BLOCK AND MAY NOT BE REUSED OR ALTERED IN WHOLE OR IN PART WITHOUT THE EXPRESS WRITTEN PERMISSION OF SAME.

Professional Engineer's Name
Professional Engineer's No.
State | Date Signed | Project Mgr.
Designed by | Drawn by A.SANCHEZ | Checked by

ARCADIS Design & Consultancy for natural and built assets
ARCADIS OF NEW YORK, INC.
NO ALTERATIONS PERMITTED HEREON EXCEPT AS PROVIDED UNDER SECTION 7209 SUBDIVISION 2 OF THE NEW YORK STATE EDUCATION LAW

NORTHROP GRUMMAN SYSTEMS CORPORATION ● OPERABLE UNIT 3 ● BETHPAGE, NEW YORK
AREA 21 - 60% REMEDIAL DESIGN

MISCELLANEOUS SITE DETAILS

GENERAL

ARCADIS Project No. NY001496.2415.R33E3
Date AUGUST 2016
ARCADIS
2 HUNTINGTON QUADRANGLE
SUITE 1S10
MELVILLE, NEW YORK
TEL. 631.249.7600

C-12

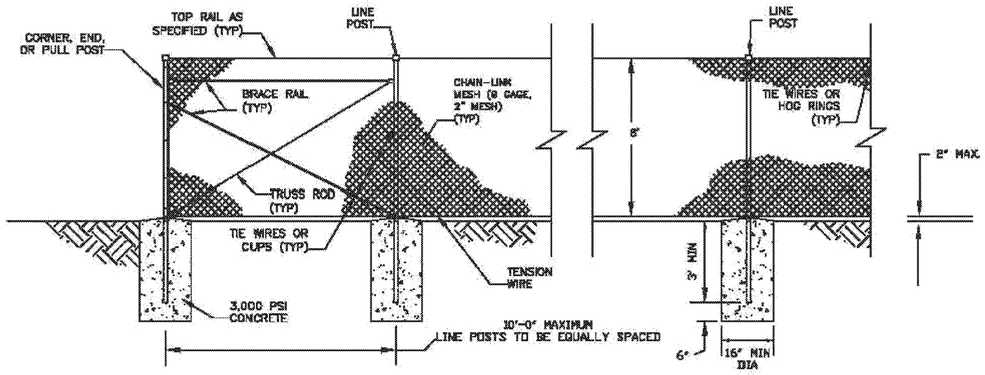

CHAIN-LINK FENCE DETAIL (TYP.) 1

NOT TO SCALE

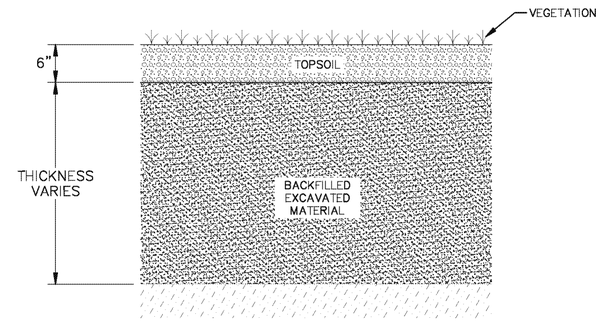

VEGETATED RESTORATION AREA DETAIL 2

NOT TO SCALE

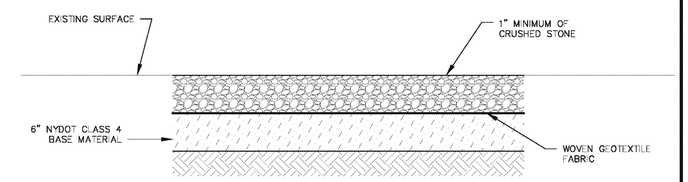

TREATMENT BUILDING GRAVEL AREA 3

NOT TO SCALE

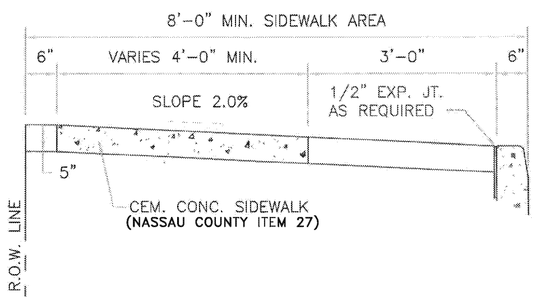

CONCRETE SIDEWALK RESTORATION 4

NOT TO SCALE

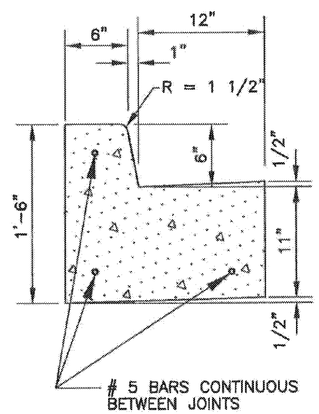

CONCRETE CURB AND GUTTER RESTORATION 5

NOT TO SCALE

CITY: DIV/GROUP: DB: LD: PIC: PM: TM: LYR:ON=*;OFF=*REF*
C:\Local-GIENVCAD\SYRACUSE\ACT\NY001496\2415\R33E3\1496R33E3C02.dwg LAYOUT: C-13 SAVED: 8/26/2016 10:47 AM ACADVER: 19.1S (LMS TECH) PAGESETUP: ---- PLOTSTYLETABLE: ---- PLOTTED: 8/26/2016 12:04 PM BY: SANCHEZ, ADRIAN
XREFS: IMAGES: PROJECTNAME: ----
XBDR-C-LD Conc.CurbDetail.jpg
Conc.SidewalkDetail.jpg
GM-38FenceDetails.jpg
InletProtectionDetail.jpg

0 30' 60'
APPROXIMATE SCALE IN FEET

THIS BAR REPRESENTS ONE INCH ON THE ORIGINAL DRAWING:

USE TO VERIFY FIGURE REPRODUCTION SCALE

No.	Date	Revisions	By	Ckd
	08.2016	60% DESIGN SUBMITTAL - ISSUED FOR BID		

THIS DRAWING IS THE PROPERTY OF THE ARCADIS ENTITY IDENTIFIED IN THE TITLE BLOCK AND MAY NOT BE REUSED OR ALTERED IN WHOLE OR IN PART WITHOUT THE EXPRESS WRITTEN PERMISSION OF SAME.

Professional Engineer's Name
Professional Engineer's No.
State | Date Signed | Project Mgr.
Designed by | Drawn by A.SANCHEZ | Checked by

ARCADIS Design & Consultancy for natural and built assets
ARCADIS OF NEW YORK, INC.
NO ALTERATIONS PERMITTED HEREON EXCEPT AS PROVIDED UNDER SECTION 7209 SUBDIVISION 2 OF THE NEW YORK STATE EDUCATION LAW

NORTHROP GRUMMAN SYSTEMS CORPORATION • OPERABLE UNIT 3 • BETHPAGE, NEW YORK
AREA 21 - 60% REMEDIAL DESIGN

MISCELLANEOUS SITE DETAILS

GENERAL

ARCADIS Project No. NY001496.2415.R33E3
Date AUGUST 2016
ARCADIS
2 HUNTINGTON QUADRANGLE
SUITE 1S10
MELVILLE, NEW YORK
TEL. 631.249.7600

C-13

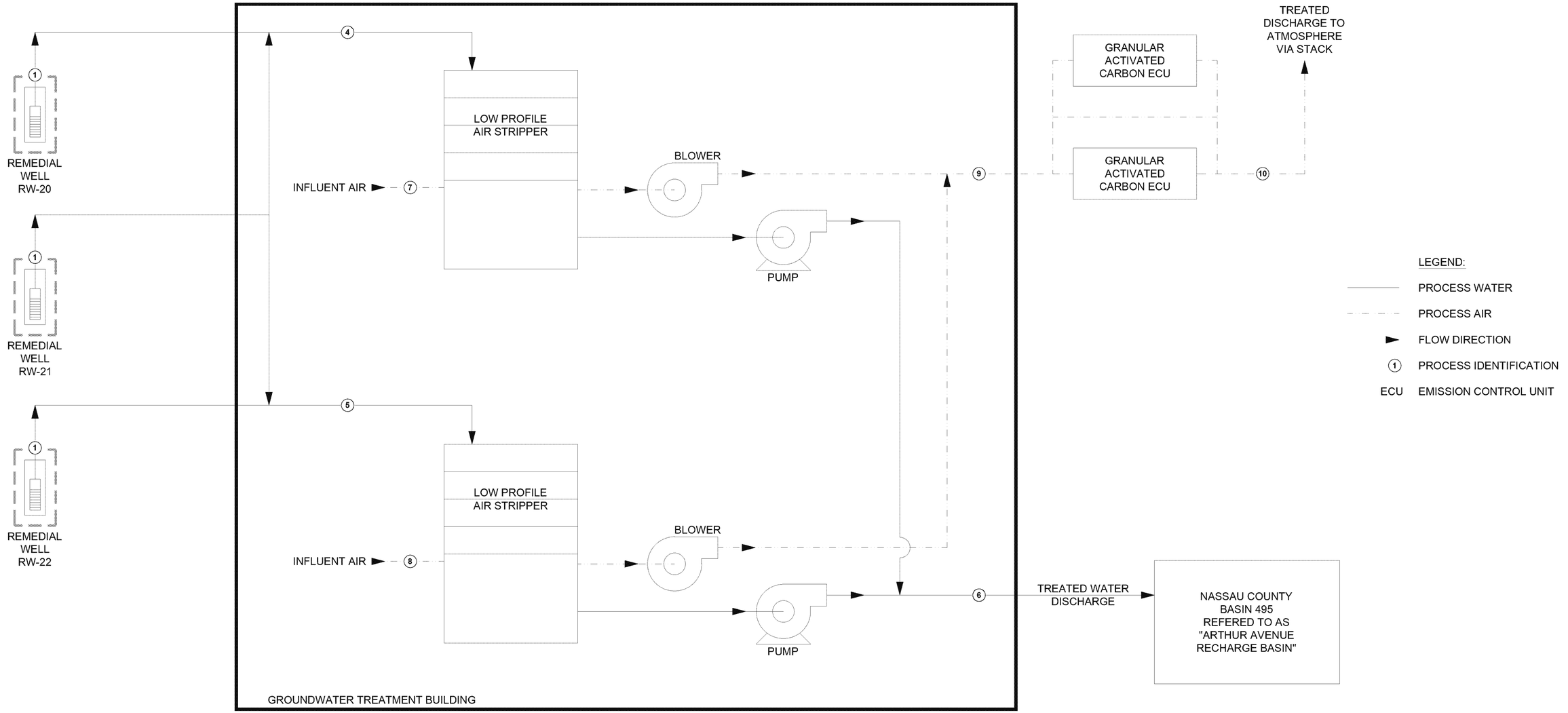

PROCESS IDENTIFICATION	1	2	3	4	5	6	7	8	9	10
Concentration (ppb)										
Trichloroethene	2,187	6,075	2,184	4,130	4,130	<1	0	0	14,388	<143
cis-1,2 Dichloroethene	194	405	194	264	264	<1	0	0	1,477	<14.7
Mass Loading (lbs/day)										
Trichloroethene	15.7	3.8	15.7	41.8	41.8	<0.018	0	0	37.7	<0.38
cis-1,2 Dichloroethene	1.4	2.9	1.4	3.2	3.2	<0.018	0	0	2.85	<0.029
Flow Rate (gpm)	600	600	600	900	900	1,800	---	---	---	---
Flow Rate (SCFM)	---	---	---	---	---	---	6,000	6,000	12,000	12,000

NOTE:

1. ALL PROCESS DATA REPRESENTS DESIGN VALUES FOR THE PURPOSE OF SIZING THE TREATMENT SYSTEM EQUIPMENT.
2. CONCENTRATIONS SHOWN IN PROCESS TABLE ARE BASED ON MODELED GROUNDWATER TOTAL VOLATILE ORGANIC COMPOUND CONCENTRATIONS.

CITY:CRANBURY-NJ DIV/GROUP:ENVCAD DB:A.SANCHEZ, T.FATTO LD: PIC: PM: C.SANGIOVANNI TM: LYR:ON=*;OFF=*REF*
G:\ENVCAD\CRANBURY\ACT\NY001496\2415\R33E3\DWG\NY001496D08.dwg LAYOUT: P-1 SAVED: 9/2/2016 3:22 PM ACADVER: 19.1S (LMS TECH) PAGESETUP: ---- PLOTSTYLETABLE: ACAD.CTB PLOTTED: 9/2/2016 3:23 PM BY: FATTO, TRACEY

THIS BAR REPRESENTS ONE INCH ON THE ORIGINAL DRAWING: USE TO VERIFY FIGURE REPRODUCTION SCALE

No.	Date	Revisions	By	Ckd

THIS DRAWING IS THE PROPERTY OF THE ARCADIS ENTITY IDENTIFIED IN THE TITLE BLOCK AND MAY NOT BE REUSED OR ALTERED IN WHOLE OR IN PART WITHOUT THE EXPRESS WRITTEN PERMISSION OF SAME.

Professional Engineer's Name
Professional Engineer's No.
State | Date Signed | Project Mgr.
Designed by | Drawn by | Checked by

ARCADIS Design & Consultancy for natural and built assets
ARCADIS OF NEW YORK, INC.
NO ALTERATIONS PERMITTED HEREON EXCEPT AS PROVIDED UNDER SECTION 7209 SUBDIVISION 2 OF THE NEW YORK STATE EDUCATION LAW

NORTHROP GRUMMAN SYSTEMS CORPORATION ● OPERABLE UNIT 3 ● BETHPAGE, NEW YORK
RW-21 AREA - 60% REMEDIAL DESIGN

PROCESS FLOW DIAGRAM

ARCADIS Project No. NY001496.2415.R33E3
Date AUGUST 2016
ARCADIS
2 HUNTINGTON QUADRANGLE
SUITE 1S10
MELVILLE, NEW YORK
Tel: 631.249.7600

P-1

EQUIPMENT LEGEND:

- PRIMARY PROCESS PIPING
- SECONDARY PROCESS PIPING
- INSTRUMENTATION SIGNAL
- SKID MOUNTED EQUIPMENT
- PLANT AIR
- WATER SAMPLE TAP
- VAPOR SAMPLE TAP
- PI — PRESSURE GAUGE
- BALL VALVE NORMALLY OPEN (NO)
- BALL VALVE NORMALLY CLOSED (NC)
- BUTTERFLY VALVE (NC)
- BUTTERFLY VALVE (NO)
- CHECK VALVE
- GATE VALVE
- ACTUATED GATE VALVE
- ACTUATED BUTTERFLY VALVE
- REDUCER
- LOCAL, FIELD MOUNT
- LIC AS — LOCAL CONTROL PANEL (AIR STRIPPER)
- LAH 100 — MAIN PLC CONTROLLER
- 1 — MAIN PLC INTERLOCK
- CENTRIFUGAL PUMP
- BLOWER
- FLOW DIRECTION
- FM — FLOW METER
- VFD — VARIABLE FREQUENCY DRIVE
- M — SUBMERSIBLE PUMP AND MOTOR
- LEAK DETECTION PORT WITH CAP
- FLEX BOOT
- DRAIN

ABBREVIATIONS:

A	AIR
AL	ALUMINUM
AS	AIR STRIPPER
AV	ACTUATED VALVE
CV	CHECK VALVE
DFI	DIFFERENTIAL FLOW INDICATOR
DFAH	DIFFERENTIAL FLOW ALARM HIGH
Ø	DIAMETER
DPAH	DIFFERENTIAL PRESSURE ALARM HIGH
DPI	DIFFERENTIAL PRESSURE INDICATOR
DPSH	DIFFERENTIAL PRESSURE SWITCH HIGH
DS	DISCONNECT SWITCH
ES	EMERGENCY STOP
FAH	FLOW ALARM HIGH
FAL	FLOW ALARM LOW
FE	FLOW ELEMENT
FI	FLOW INDICATOR
FIT	FLOW INDICATING TRANSMITTER
FM	FLOW METER
FP	FLOOR PENETRATION
FQI	TOTALIZED FLOW INDICATOR
FS	FAIL SAFE
GAC	VAPOR-PHASE GRANULAR ACTIVATED CARBON
HDPE	HIGH DENSITY POLYETHYLENE
HOA	HAND-OFF-AUTO
HS	HAND SWITCH
INS	INSULATED
KI	PUMP RUN TIME INDICATOR
LAH	LEVEL ALARM HIGH
LAHH	LEVEL ALARM HIGH-HIGH
LAL	LEVEL ALARM LOW
LALL	LEVEL ALARM LOW-LOW
LE	LEVEL ELEMENT
LIC	LEVEL INDICATING CONTROLLER
LSH	LEVEL SWITCH HIGH
LSHH	LEVEL SWITCH HIGH HIGH
LSL	LEVEL SWITCH LOW
M	MOTOR
MV	MANUAL VALVE
NC	NORMALLY CLOSED
NO	NORMALLY OPEN
PAH	PRESSURE ALARM HIGH
PAL	PRESSURE ALARM LOW
PT	PRESSURE TRANSMITTER
PI	PRESSURE INDICATOR
PLC	PROGRAMMABLE LOGIC CONTROLLER
PSL	PRESSURE SWITCH LOW
PSH	PRESSURE SWITCH HIGH
PVC	POLYVINYL CHLORIDE
RW	RECOVERY WELL
SCH	SCHEDULE
SDR	STANDARD DIMENSION RATIO
SFSI	SECONDARY FAIL SAFE INTERLOCK
TAL	TEMPERATURE ALARM LOW
TI	TEMPERATURE INDICATOR
TT	TEMPERATURE INDICATING TRANSMITTER
TYP	TYPICAL
UG	UNDERGROUND
VI	VACUUM INDICATOR
VSP	VAPOR SAMPLE POINT (AIR)
WSP	WATER SAMPLE POINT (WATER)
YA	MOTOR FAULT
YI	RUN INDICATION
ZI	POSITION INDICATOR

INSTRUMENTATION AND PLC INPUT/OUTPUT SCHEDULE:

ANALOG INPUTS:

1.	PT-101	16.	PT-510
2.	PT-102	17.	PT-600
3.	PT-103	18.	PT-700
4.	PT-104	19.	FIT-101
5.	PT-201	20.	FIT-102
6.	PT-202	21.	FIT-201
7.	PT-203	22.	FIT-202
8.	PT-204	23.	FIT-203
9.	PT-301	24.	FIT-301
10.	PT-302	25.	FIT-302
11.	PT-303	26.	FIT-400
12.	PT-304	27.	FIT-410
13.	PT-401	28.	FIT-500
14.	PT-411	29.	FIT-510
15.	PT-500	30.	FIT-700

DISCRETE INPUTS:

1.	YI-101	15.	ZI-101
2.	YI-201	16.	ZI-201
3.	YI-203	17.	ZI-202
4.	YI-400	18.	ZI-301
5.	YI-410	19.	DPAH-101
6.	YI-500	20.	DPAH-201
7.	YI-510	21.	DPAH-202
8.	KI-101	22.	DFAH-101
9.	KI-201	23.	DFAH-201
10.	KI-203	24.	DFAH-301
11.	KI-400	25.	ES-100
12.	KI-410	26.	ES-200
13.	KI-500	27.	ES-300
14.	KI-510	28.	ES-400

DISCRETE OUTPUTS:

1. P-101 SHUTDOWN
2. P-201 SHUTDOWN
3. P-301 SHUTDOWN
4. AS-1 SHUTDOWN
5. AS-2 SHUTDOWN
6. AUTODIALER

PIPE IDENTIFICATION TAGS:

DIAMETER - MATERIAL - SCHEDULE - SERVICE - OTHER

DIAMETER: NOMINAL DIAMETER (INCHES)

SERVICE:
- A = AIR
- W = WATER

SCHEDULE = US STANDARD UNITS

MATERIAL:
- GS = GALVANIZED STEEL
- HDPE = HIGH DENSITY POLYETHYLENE
- PVC = POLYVINYL CHLORIDE
- SS = STAINLESS STEEL

OTHER:
- B = BARE
- INS = INSULATED
- UG = UNDERGROUND

MAIN PLC INTERLOCK SCHEDULE:

1. LOW FLOW IN RW-20 INFLUENT LINE (FAL-101), SHUTDOWN RW-20, SIGNAL ALARM AT PLC AND ACTIVATE AUTODIALER.
2. HIGH FLOW IN RW-20 INFLUENT LINE (FAH-101), SHUTDOWN RW-20, SIGNAL ALARM AT PLC AND ACTIVATE AUTODIALER.
3. HIGH DIFFERENTIAL FLOW IN RW-20 INFLUENT LINE (DFAH-101), SHUTDOWN RW-20, SIGNAL ALARM AT PLC AND ACTIVATE AUTODIALER.
4. LOW PRESSURE IN RW-20 INFLUENT LINE (PAL-101), SHUTDOWN RW-20, SIGNAL ALARM AT PLC AND ACTIVATE AUTODIALER.
5. HIGH PRESSURE IN RW-20 INFLUENT LINE (PAH-101), SHUTDOWN RW-20, SIGNAL ALARM AT PLC AND ACTIVATE AUTODIALER.
6. LOW PRESSURE IN RW-20 CONTAINMENT LINE (PAL-102), SHUTDOWN RW-20, SIGNAL ALARM AT PLC AND ACTIVATE AUTODIALER.
7. HIGH PRESSURE IN RW-20 CONTAINMENT LINE (PAH-102), SHUTDOWN RW-20, SIGNAL ALARM AT PLC AND ACTIVATE AUTODIALER.
8. HIGH DIFFERENTIAL PRESSURE IN RW-20 CONTAINMENT LINE (DPAH-101), SHUTDOWN RW-20, SIGNAL ALARM AT PLC AND ACTIVATE AUTODIALER.
9. LOW PRESSURE IN RW-20 CONTAINMENT LINE (PAL-103), SHUTDOWN RW-20, SIGNAL ALARM AT PLC AND ACTIVATE AUTODIALER.
10. HIGH PRESSURE IN RW-20 CONTAINMENT LINE (PAH-103), SHUTDOWN RW-20, SIGNAL ALARM AT PLC AND ACTIVATE AUTODIALER.
11. LOW FLOW IN RW-20 INFLUENT LINE (FAL-102), SHUTDOWN RW-20, SIGNAL ALARM AT PLC AND ACTIVATE AUTODIALER.
12. HIGH FLOW IN RW-20 INFLUENT LINE (FAH-102), SHUTDOWN RW-20, SIGNAL ALARM AT PLC AND ACTIVATE AUTODIALER.
13. HIGH LEVEL ALARM IN RW-20 VAULT (LAH-101), SIGNAL ALARM AT PLC.
14. HIGH-HIGH LEVEL ALARM AT RW-20 VAULT (LAHH-101), SHUTDOWN RW-20, SIGNAL ALARM AT PLC AND ACTIVATE AUTODIALER.
15. LOW FLOW IN RW-21 INFLUENT LINE (FAL-201), SHUTDOWN RW-21, SIGNAL ALARM AT PLC AND ACTIVATE AUTODIALER.
16. HIGH FLOW IN RW-21 INFLUENT LINE (FAH-201), SHUTDOWN RW-21, SIGNAL ALARM AT PLC AND ACTIVATE AUTODIALER.
17. HIGH DIFFERENTIAL FLOW IN RW-21 INFLUENT LINE (DFAH-201), SHUTDOWN RW-21, SIGNAL ALARM AT PLC AND ACTIVATE AUTODIALER.
18. LOW PRESSURE IN RW-21 INFLUENT LINE (PAL-201), SHUTDOWN RW-21, SIGNAL ALARM AT PLC AND ACTIVATE AUTODIALER.
19. HIGH PRESSURE IN RW-21 INFLUENT LINE (PAH-201), SHUTDOWN RW-21, SIGNAL ALARM AT PLC AND ACTIVATE AUTODIALER.
20. LOW PRESSURE IN RW-21 CONTAINMENT LINE (PAL-202), SHUTDOWN RW-21, SIGNAL ALARM AT PLC AND ACTIVATE AUTODIALER.
21. HIGH PRESSURE IN RW-21 CONTAINMENT LINE (PAH-202), SHUTDOWN RW-21, SIGNAL ALARM AT PLC AND ACTIVATE AUTODIALER.
22. HIGH DIFFERENTIAL PRESSURE IN RW-21 CONTAINMENT LINE (DPAH-201), SHUTDOWN RW-21, SIGNAL ALARM AT PLC AND ACTIVATE AUTODIALER.
23. LOW PRESSURE IN RW-21 CONTAINMENT LINE (PAL-203), SHUTDOWN RW-21, SIGNAL ALARM AT PLC AND ACTIVATE AUTODIALER.
24. HIGH PRESSURE IN RW-21 CONTAINMENT LINE (PAH-203), SHUTDOWN RW-21, SIGNAL ALARM AT PLC AND ACTIVATE AUTODIALER.
25. LOW FLOW IN RW-21 INFLUENT LINE (FAL-202), SHUTDOWN RW-21, SIGNAL ALARM AT PLC AND ACTIVATE AUTODIALER.
26. HIGH FLOW IN RW-21 INFLUENT LINE (FAH-202), SHUTDOWN RW-21, SIGNAL ALARM AT PLC AND ACTIVATE AUTODIALER.
27. HIGH LEVEL ALARM IN RW-21 VAULT (LAH-201), SIGNAL ALARM AT PLC.
28. HIGH-HIGH LEVEL ALARM AT RW-21 VAULT (LAHH-201), SHUTDOWN RW-21, SIGNAL ALARM AT PLC AND ACTIVATE AUTODIALER.
29. LOW FLOW IN RW-22 INFLUENT LINE (FAL-301), SHUTDOWN RW-22, SIGNAL ALARM AT PLC AND ACTIVATE AUTODIALER.
30. HIGH FLOW IN RW-22 INFLUENT LINE (FAH-301), SHUTDOWN RW-22, SIGNAL ALARM AT PLC AND ACTIVATE AUTODIALER.
31. HIGH DIFFERENTIAL FLOW IN RW-22 INFLUENT LINE (DFAH-301), SHUTDOWN RW-20, SIGNAL ALARM AT PLC AND ACTIVATE AUTODIALER.
32. LOW PRESSURE IN RW-22 INFLUENT LINE (PAL-301), SHUTDOWN RW-22, SIGNAL ALARM AT PLC AND ACTIVATE AUTODIALER.
33. HIGH PRESSURE IN RW-22 INFLUENT LINE (PAH-301), SHUTDOWN RW-22, SIGNAL ALARM AT PLC AND ACTIVATE AUTODIALER.
34. LOW PRESSURE IN RW-22 CONTAINMENT LINE (PAL-302), SHUTDOWN RW-22, SIGNAL ALARM AT PLC AND ACTIVATE AUTODIALER.
35. HIGH PRESSURE IN RW-22 CONTAINMENT LINE (PAH-302), SHUTDOWN RW-22, SIGNAL ALARM AT PLC AND ACTIVATE AUTODIALER.
36. HIGH DIFFERENTIAL PRESSURE IN RW-22 CONTAINMENT LINE (DPAH-301), SHUTDOWN RW-22, SIGNAL ALARM AT PLC AND ACTIVATE AUTODIALER.
37. LOW PRESSURE IN RW-22 CONTAINMENT LINE (PAL-303), SHUTDOWN RW-22, SIGNAL ALARM AT PLC AND ACTIVATE AUTODIALER.
38. HIGH PRESSURE IN RW-22 CONTAINMENT LINE (PAH-303), SHUTDOWN RW-22, SIGNAL ALARM AT PLC AND ACTIVATE AUTODIALER.
39. LOW FLOW IN RW-22 INFLUENT LINE (FAL-302), SHUTDOWN RW-22, SIGNAL ALARM AT PLC AND ACTIVATE AUTODIALER.
40. HIGH FLOW IN RW-22 INFLUENT LINE (FAH-302), SHUTDOWN RW-22, SIGNAL ALARM AT PLC AND ACTIVATE AUTODIALER.
41. HIGH LEVEL ALARM IN RW-22 VAULT (LAH-301), SIGNAL ALARM AT PLC.
42. HIGH-HIGH LEVEL ALARM AT RW-22 VAULT (LAHH-301), SHUTDOWN RW-22, SIGNAL ALARM AT PLC AND ACTIVATE AUTODIALER.
43. LOW PRESSURE IN RW-21 INFLUENT LINE (PAL-104), SHUTDOWN RW-21, SIGNAL ALARM AT PLC AND ACTIVATE AUTODIALER.
44. HIGH PRESSURE IN RW-21 INFLUENT LINE (PAH-104), SHUTDOWN RW-21, SIGNAL ALARM AT PLC AND ACTIVATE AUTODIALER.
45. LOW PRESSURE IN RW-20 INFLUENT LINE (PAL-204), SHUTDOWN RW-20, SIGNAL ALARM AT PLC AND ACTIVATE AUTODIALER.
46. HIGH PRESSURE IN RW-20 INFLUENT LINE (PAH-204), SHUTDOWN RW-20, SIGNAL ALARM AT PLC AND ACTIVATE AUTODIALER.
47. LOW PRESSURE IN RW-22 INFLUENT LINE (PAL-304), SHUTDOWN RW-22, SIGNAL ALARM AT PLC AND ACTIVATE AUTODIALER.
48. HIGH PRESSURE IN RW-22 INFLUENT LINE (PAH-304), SHUTDOWN RW-22, SIGNAL ALARM AT PLC AND ACTIVATE AUTODIALER.
49. LOW SUMP LEVEL AT AIR STRIPPER AS-1 (LAL-AS-1), SHUTDOWN EXTRACTION WELL PUMPS, SHUTDOWN AIR STRIPPER SYSTEM (5 MINUTE DELAY), SIGNAL ALARM AT PLC AND ACTIVATE AUTODIALER. AIR STRIPPER WILL BE SHUT DOWN LOCALLY BY AIR STRIPPER CONTROL PANEL ON A 5 MINUTE DELAY.
50. HIGH SUMP LEVEL AT AIR STRIPPER AS-1 (LAH-AS-1), SHUTDOWN EXTRACTION WELL PUMPS, SHUTDOWN AIR STRIPPER SYSTEM (5 MINUTE DELAY), SIGNAL ALARM AT PLC AND ACTIVATE AUTODIALER. AIR STRIPPER WILL BE SHUT DOWN LOCALLY BY AIR STRIPPER CONTROL PANEL ON A 5 MINUTE DELAY.
51. LOW SUMP LEVEL AT AIR STRIPPER AS-2 (LAL-AS-2), SHUTDOWN EXTRACTION WELL PUMPS, SHUTDOWN AIR STRIPPER SYSTEM (5 MINUTE DELAY), SIGNAL ALARM AT PLC AND ACTIVATE AUTODIALER. AIR STRIPPER WILL BE SHUT DOWN LOCALLY BY AIR STRIPPER CONTROL PANEL ON A 5 MINUTE DELAY.
52. HIGH SUMP LEVEL AT AIR STRIPPER AS-2 (LAH-AS-2), SHUTDOWN EXTRACTION WELL PUMPS, SHUTDOWN AIR STRIPPER SYSTEM (5 MINUTE DELAY), SIGNAL ALARM AT PLC AND ACTIVATE AUTODIALER. AIR STRIPPER WILL BE SHUT DOWN LOCALLY BY AIR STRIPPER CONTROL PANEL ON A 5 MINUTE DELAY.
53. LOW PRESSURE AT AIR STRIPPER BLOWER B-400 DISCHARGE LINE (PAL-400), SHUTDOWN EXTRACTION WELL PUMPS, SHUTDOWN AIR STRIPPER SYSTEM (5 MINUTE DELAY), SIGNAL ALARM AT PLC AND ACTIVATE AUTODIALER. AIR STRIPPER WILL BE SHUT DOWN LOCALLY BY AIR STRIPPER CONTROL PANEL ON A 5 MINUTE DELAY.
54. HIGH PRESSURE AT AIR STRIPPER BLOWER B-400 DISCHARGE LINE (PAH-400), SHUTDOWN EXTRACTION WELL PUMPS, SHUTDOWN AIR STRIPPER SYSTEM (5 MINUTE DELAY), SIGNAL ALARM AT PLC AND ACTIVATE AUTODIALER. AIR STRIPPER WILL BE SHUT DOWN LOCALLY BY AIR STRIPPER CONTROL PANEL ON A 5 MINUTE DELAY.
55. LOW PRESSURE AT AIR STRIPPER BLOWER B-410 DISCHARGE LINE (PAL-410), SHUTDOWN EXTRACTION WELL PUMPS, SHUTDOWN AIR STRIPPER SYSTEM (5 MINUTE DELAY), SIGNAL ALARM AT PLC AND ACTIVATE AUTODIALER. AIR STRIPPER WILL BE SHUT DOWN LOCALLY BY AIR STRIPPER CONTROL PANEL ON A 5 MINUTE DELAY.
56. HIGH PRESSURE AT AIR STRIPPER BLOWER B-410 DISCHARGE LINE (PAH-410), SHUTDOWN EXTRACTION WELL PUMPS, SHUTDOWN AIR STRIPPER SYSTEM (5 MINUTE DELAY), SIGNAL ALARM AT PLC AND ACTIVATE AUTODIALER. AIR STRIPPER WILL BE SHUT DOWN LOCALLY BY AIR STRIPPER CONTROL PANEL ON A 5 MINUTE DELAY.
57. LOW AIR FLOW AT AIR STRIPPER BLOWER B-400 DISCHARGE LINE (FAL-400), SHUTDOWN EXTRACTION WELL PUMPS, SHUTDOWN AIR STRIPPER SYSTEM (5 MINUTE DELAY), SIGNAL ALARM AT PLC AND ACTIVATE AUTODIALER. AIR STRIPPER WILL BE SHUT DOWN LOCALLY BY AIR STRIPPER CONTROL PANEL ON A 5 MINUTE DELAY.
58. HIGH AIR FLOW AT AIR STRIPPER BLOWER B-400 DISCHARGE LINE (FAH-400), SHUTDOWN EXTRACTION WELL PUMPS, SHUTDOWN AIR STRIPPER SYSTEM (5 MINUTE DELAY), SIGNAL ALARM AT PLC AND ACTIVATE AUTODIALER. AIR STRIPPER WILL BE SHUT DOWN LOCALLY BY AIR STRIPPER CONTROL PANEL ON A 5 MINUTE DELAY.
59. LOW AIR FLOW AT AIR STRIPPER BLOWER B-410 DISCHARGE LINE (FAL-410), SHUTDOWN EXTRACTION WELL PUMPS, SHUTDOWN AIR STRIPPER SYSTEM (5 MINUTE DELAY), SIGNAL ALARM AT PLC AND ACTIVATE AUTODIALER. AIR STRIPPER WILL BE SHUT DOWN LOCALLY BY AIR STRIPPER CONTROL PANEL ON A 5 MINUTE DELAY.
60. HIGH AIR FLOW AT AIR STRIPPER BLOWER B-410 DISCHARGE LINE (FAH-410), SHUTDOWN EXTRACTION WELL PUMPS, SHUTDOWN AIR STRIPPER SYSTEM (5 MINUTE DELAY), SIGNAL ALARM AT PLC AND ACTIVATE AUTODIALER. AIR STRIPPER WILL BE SHUT DOWN LOCALLY BY AIR STRIPPER CONTROL PANEL ON A 5 MINUTE DELAY.
61. LOW PRESSURE AT AIR STRIPPER PUMP P-500 DISCHARGE LINE (PAL-500), SHUTDOWN EXTRACTION WELL PUMPS, SHUTDOWN AIR STRIPPER SYSTEM (5 MINUTE DELAY), SIGNAL ALARM AT PLC AND ACTIVATE AUTODIALER. AIR STRIPPER WILL BE SHUT DOWN LOCALLY BY AIR STRIPPER CONTROL PANEL ON A 5 MINUTE DELAY.
62. HIGH PRESSURE AT AIR STRIPPER PUMP P-500 DISCHARGE LINE (PAH-500), SHUTDOWN EXTRACTION WELL PUMPS, SHUTDOWN AIR STRIPPER SYSTEM (5 MINUTE DELAY), SIGNAL ALARM AT PLC AND ACTIVATE AUTODIALER. AIR STRIPPER WILL BE SHUT DOWN LOCALLY BY AIR STRIPPER CONTROL PANEL ON A 5 MINUTE DELAY.
63. LOW PRESSURE AT AIR STRIPPER PUMP P-510 DISCHARGE LINE (PAL-510), SHUTDOWN EXTRACTION WELL PUMPS, SHUTDOWN AIR STRIPPER SYSTEM (5 MINUTE DELAY), SIGNAL ALARM AT PLC AND ACTIVATE AUTODIALER. AIR STRIPPER WILL BE SHUT DOWN LOCALLY BY AIR STRIPPER CONTROL PANEL ON A 5 MINUTE DELAY.
64. HIGH PRESSURE AT AIR STRIPPER PUMP P-510 DISCHARGE LINE (PAH-510), SHUTDOWN EXTRACTION WELL PUMPS, SHUTDOWN AIR STRIPPER SYSTEM (5 MINUTE DELAY), SIGNAL ALARM AT PLC AND ACTIVATE AUTODIALER. AIR STRIPPER WILL BE SHUT DOWN LOCALLY BY AIR STRIPPER CONTROL PANEL ON A 5 MINUTE DELAY.
65. LOW FLOW AT AIR STRIPPER PUMP P-500 DISCHARGE LINE (FAL-500), SHUTDOWN EXTRACTION WELL PUMPS, SHUTDOWN AIR STRIPPER SYSTEM (5 MINUTE DELAY), SIGNAL ALARM AT PLC AND ACTIVATE AUTODIALER. AIR STRIPPER WILL BE SHUT DOWN LOCALLY BY AIR STRIPPER CONTROL PANEL ON A 5 MINUTE DELAY.
66. HIGH FLOW AT AIR STRIPPER PUMP P-500 DISCHARGE LINE (FAH-500), SHUTDOWN EXTRACTION WELL PUMPS, SHUTDOWN AIR STRIPPER SYSTEM (5 MINUTE DELAY), SIGNAL ALARM AT PLC AND ACTIVATE AUTODIALER. AIR STRIPPER WILL BE SHUT DOWN LOCALLY BY AIR STRIPPER CONTROL PANEL ON A 5 MINUTE DELAY.
67. LOW FLOW AT AIR STRIPPER PUMP P-510 DISCHARGE LINE (FAL-510), SHUTDOWN EXTRACTION WELL PUMPS, SHUTDOWN AIR STRIPPER SYSTEM (5 MINUTE DELAY), SIGNAL ALARM AT PLC AND ACTIVATE AUTODIALER. AIR STRIPPER WILL BE SHUT DOWN LOCALLY BY AIR STRIPPER CONTROL PANEL ON A 5 MINUTE DELAY.
68. HIGH FLOW AT AIR STRIPPER PUMP P-510 DISCHARGE LINE (FAH-510), SHUTDOWN EXTRACTION WELL PUMPS, SHUTDOWN AIR STRIPPER SYSTEM (5 MINUTE DELAY), SIGNAL ALARM AT PLC AND ACTIVATE AUTODIALER. AIR STRIPPER WILL BE SHUT DOWN LOCALLY BY AIR STRIPPER CONTROL PANEL ON A 5 MINUTE DELAY.
69. LOW PRESSURE AT AIR STRIPPER PUMP COMBINED DISCHARGE LINE (PAL-700), SHUTDOWN EXTRACTION WELL PUMPS, SHUTDOWN AIR STRIPPER SYSTEM (5 MINUTE DELAY), SIGNAL ALARM AT PLC AND ACTIVATE AUTODIALER.
70. HIGH PRESSURE AT AIR STRIPPER PUMP COMBINED DISCHARGE LINE (PAH-700), SHUTDOWN EXTRACTION WELL PUMPS, SHUTDOWN AIR STRIPPER SYSTEM (5 MINUTE DELAY), SIGNAL ALARM AT PLC AND ACTIVATE AUTODIALER.
71. LOW FLOW AT AIR STRIPPER PUMP COMBINED DISCHARGE LINE (FAL-700), SHUTDOWN EXTRACTION WELL PUMPS, SHUTDOWN AIR STRIPPER SYSTEM (5 MINUTE DELAY), SIGNAL ALARM AT PLC AND ACTIVATE AUTODIALER.
72. HIGH FLOW AT AIR STRIPPER PUMP COMBINED DISCHARGE LINE (FAH-700), SHUTDOWN EXTRACTION WELL PUMPS, SHUTDOWN AIR STRIPPER SYSTEM (5 MINUTE DELAY), SIGNAL ALARM AT PLC AND ACTIVATE AUTODIALER.

SECONDARY FAIL-SAFE INTERLOCK SCHEDULE:

73. LOW PRESSURE SWITCH (PSL-400) AT AIR STRIPPER 1 ACTIVATED, SHUTDOWN EXTRACTION WELL PUMPS (PAL-400).
74. HIGH PRESSURE SWITCH (PSH-400) AT AIR STRIPPER 1 ACTIVATED, SHUTDOWN EXTRACTION WELL PUMPS (PAH-400).
75. LOW PRESSURE SWITCH (PSL-410) AT AIR STRIPPER 2 ACTIVATED, SHUTDOWN EXTRACTION WELL PUMPS (PAL-410).
76. HIGH PRESSURE SWITCH (PSH-410) AT AIR STRIPPER 2 ACTIVATED, SHUTDOWN EXTRACTION WELL PUMPS (PAH-410).

CITY:GRANBURY-NJ DIV/GROUP:ENVCAD DB:A.SANCHEZ, T.FATTO LD: PIC: PM: C.SANGIOVANNI TM: LYR:ON=*;OFF=*REF*
C:\ENVCAD\GRANBURY\ACT\NY001496\2415\R33E3\DWG\NY001496D06.dwg LAYOUT: P-2 SAVED: 8/26/2016 2:06 PM ACADVER: 19.1S (LMS TECH) PAGESETUP: PDF-ANSI D PLOTSTYLETABLE: PLTCONT1.CTB PLOTTED: 8/26/2016 2:06 PM BY: FATTO, TRACEY
XREFS: IMAGES: PROJECTNAME: ----
NY001496X0D

NOT TO SCALE

THIS BAR REPRESENTS ONE INCH ON THE ORIGINAL DRAWING: USE TO VERIFY FIGURE REPRODUCTION SCALE

No.	Date	Revisions	By	Ckd

THIS DRAWING IS THE PROPERTY OF THE ARCADIS ENTITY IDENTIFIED IN THE TITLE BLOCK AND MAY NOT BE REUSED OR ALTERED IN WHOLE OR IN PART WITHOUT THE EXPRESS WRITTEN PERMISSION OF SAME.

Professional Engineer's Name
Professional Engineer's No.
State | Date Signed | Project Mgr.
Designed by | Drawn by | Checked by

ARCADIS Design & Consultancy for natural and built assets
ARCADIS OF NEW YORK, INC.

NO ALTERATIONS PERMITTED HEREON EXCEPT AS PROVIDED UNDER SECTION 7209 SUBDIVISION 2 OF THE NEW YORK STATE EDUCATION LAW

NORTHROP GRUMMAN SYSTEMS CORPORATION • OPERABLE UNIT 3 • BETHPAGE, NEW YORK
RW-21 AREA - 60% REMEDIAL DESIGN

LEGEND, ABBREVIATIONS AND INTERLOCKS

ARCADIS Project No. NY001496.2415.R33E3
Date AUGUST 2016

ARCADIS
2 HUNTINGTON QUADRANGLE
SUITE 1S10
MELVILLE, NEW YORK
Tel. 631.249.7600

P-2

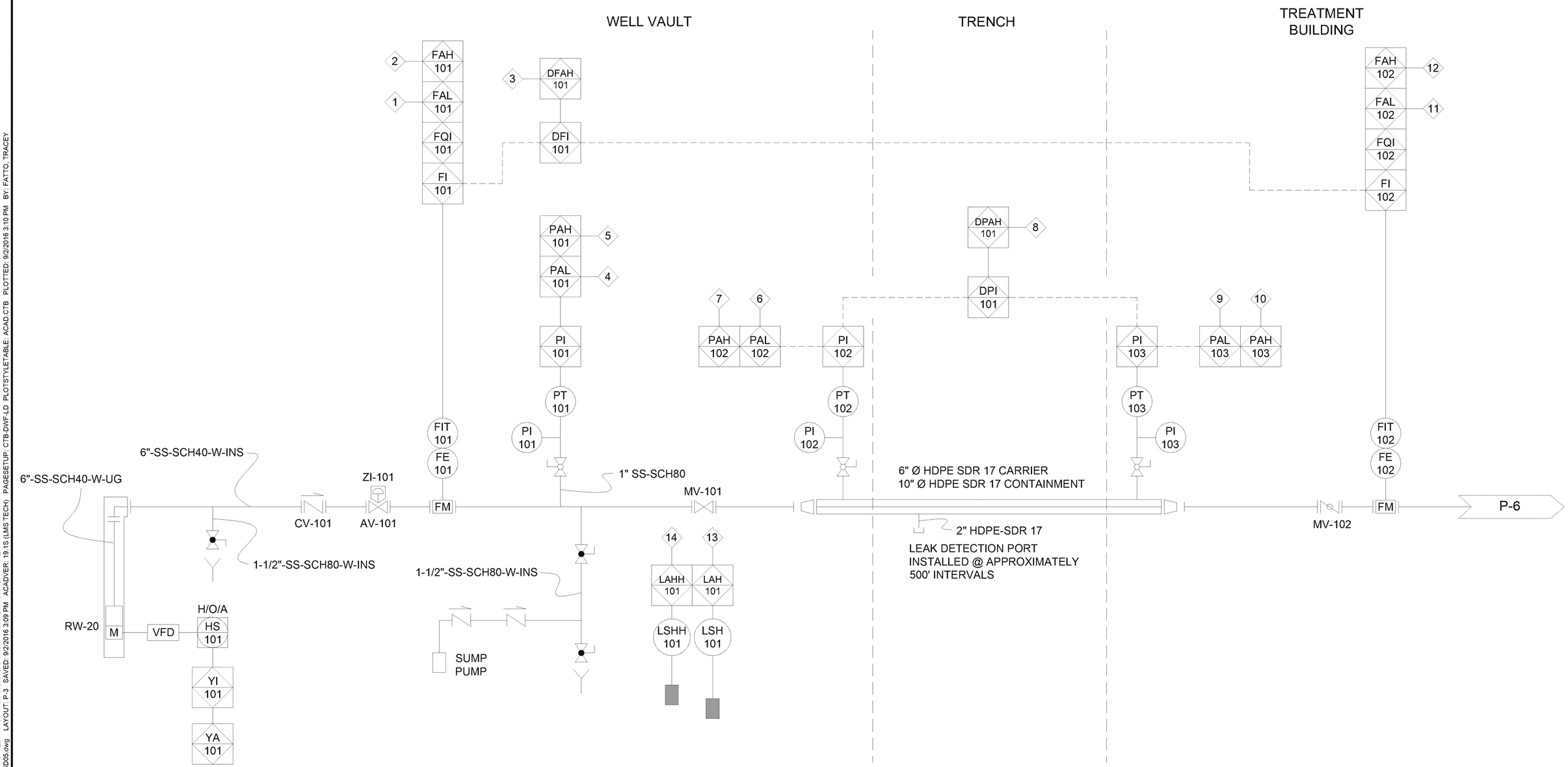

No.	Date	Revisions	By	Ckd

THIS DRAWING IS THE PROPERTY OF THE ARCADIS ENTITY IDENTIFIED IN THE TITLE BLOCK AND MAY NOT BE REUSED OR ALTERED IN WHOLE OR IN PART WITHOUT THE EXPRESS WRITTEN PERMISSION OF SAME.

THIS BAR REPRESENTS ONE INCH ON THE ORIGINAL DRAWING: USE TO VERIFY FIGURE REPRODUCTION SCALE

Professional Engineer's Name
Professional Engineer's No.
State | Date Signed | Project Mgr.
Designed by | Drawn by | Checked by

ARCADIS Design & Consultancy for natural and built assets
ARCADIS OF NEW YORK, INC.
NO ALTERATIONS PERMITTED HEREON EXCEPT AS PROVIDED UNDER SECTION 7209 SUBDIVISION 2 OF THE NEW YORK STATE EDUCATION LAW

NORTHROP GRUMMAN SYSTEMS CORPORATION • OPERABLE UNIT 3 • BETHPAGE, NEW YORK
RW-21 AREA - 60% REMEDIAL DESIGN

PIPING AND INSTRUMENTATION DIAGRAM (SHEET 1 OF 5)

ARCADIS Project No. NY001496.2415.R33E3
Date AUGUST 2016
ARCADIS
2 HUNTINGTON QUADRANGLE
SUITE 1S10
MELVILLE, NEW YORK
Tel: 631.249.7600

P-3

CITY:CRANBURY-NJ DIV/GROUP:ENVCAD DB:A.SANCHEZ, T.FATTO LD: PIC: PM: C.SANGIOVANNI TM: LYR:ON=*;OFF=*REF*
G:\ENVCAD\CRANBURY\ACT\NY001496\2415\R33E3\DWG\NY001496D05.dwg LAYOUT: P-3 SAVED: 9/2/2016 3:09 PM ACADVER: 19.1S (LMS TECH) PAGESETUP: CTB-DWF-LD PLOTSTYLETABLE: ACAD.CTB PLOTTED: 9/2/2016 3:10 PM BY: FATTO, TRACEY

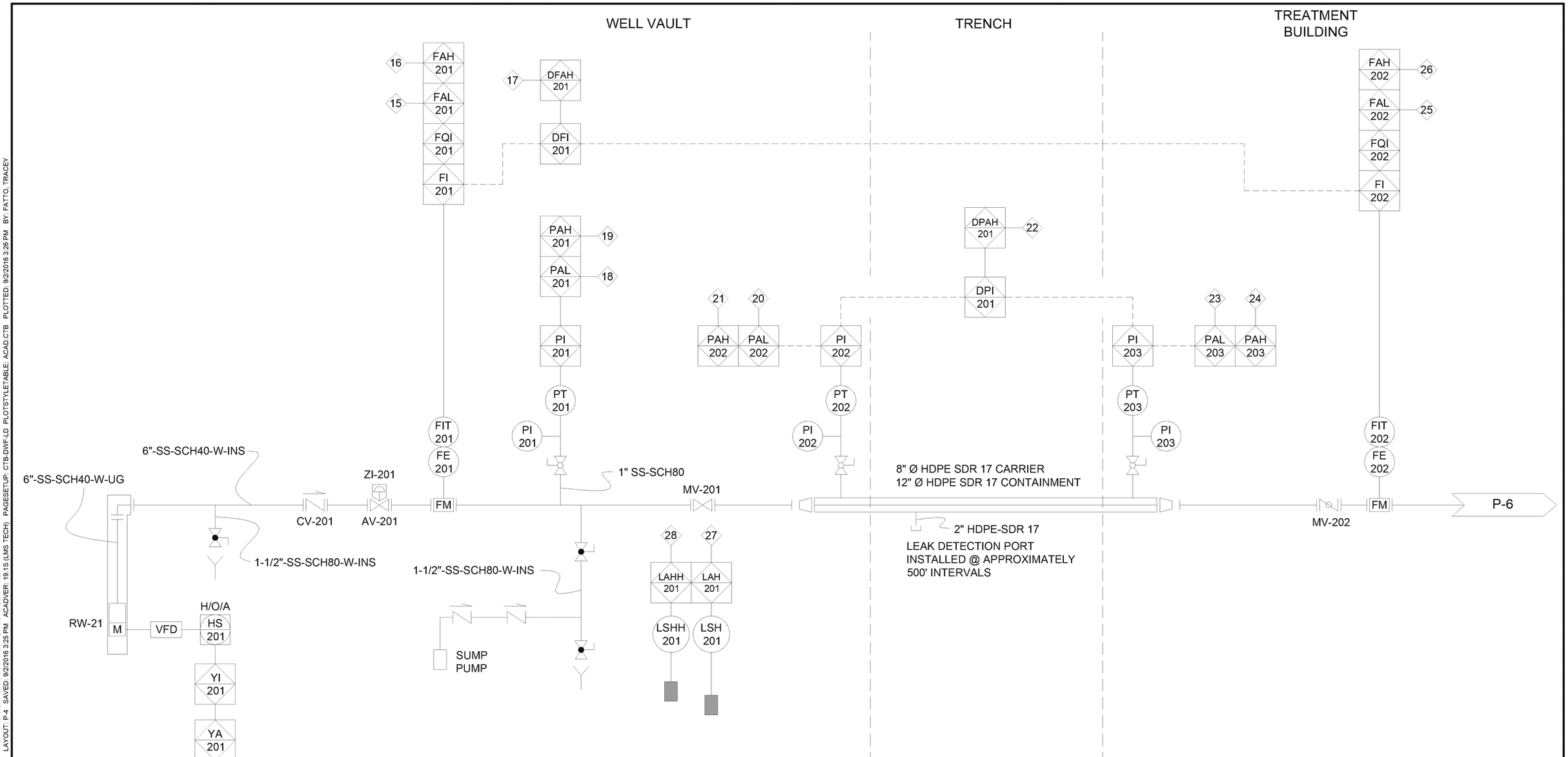

THIS BAR REPRESENTS ONE INCH ON THE ORIGINAL DRAWING: USE TO VERIFY FIGURE REPRODUCTION SCALE

No.	Date	Revisions	By	Ckd

THIS DRAWING IS THE PROPERTY OF THE ARCADIS ENTITY IDENTIFIED IN THE TITLE BLOCK AND MAY NOT BE REUSED OR ALTERED IN WHOLE OR IN PART WITHOUT THE EXPRESS WRITTEN PERMISSION OF SAME.

Professional Engineer's Name
Professional Engineer's No.
State | Date Signed | Project Mgr.
Designed by | Drawn by | Checked by

ARCADIS Design & Consultancy for natural and built assets
ARCADIS OF NEW YORK, INC.

NO ALTERATIONS PERMITTED HEREON EXCEPT AS PROVIDED UNDER SECTION 7209 SUBDIVISION 2 OF THE NEW YORK STATE EDUCATION LAW

NORTHROP GRUMMAN SYSTEMS CORPORATION • OPERABLE UNIT 3 • BETHPAGE, NEW YORK
RW-21 AREA - 60% REMEDIAL DESIGN

PIPING AND INSTRUMENTATION DIAGRAM (SHEET 2 OF 5)

ARCADIS Project No. NY001496.2415.R33E3
Date AUGUST 2016
ARCADIS
2 HUNTINGTON QUADRANGLE
SUITE 1S10
MELVILLE, NEW YORK
Tel: 631.249.7600

P-4

CITY:CRANBURY-NJ DIV/GROUP:ENVCAD DB:A.SANCHEZ, T.FATTO LD: PIC: PM: C.SANGIOVANNI TM: LYR:ON=*;OFF=*REF*
G:\ENVCAD\CRANBURY\ACT\NY001496\2415\R33E3\DWG\NY001496D05.dwg LAYOUT: P-4 SAVED: 9/2/2016 3:25 PM ACADVER: 19.1S (LMS TECH) PAGESETUP: CTB-DWF-LD PLOTSTYLETABLE: ACAD.CTB PLOTTED: 9/2/2016 3:26 PM BY: FATTO, TRACEY

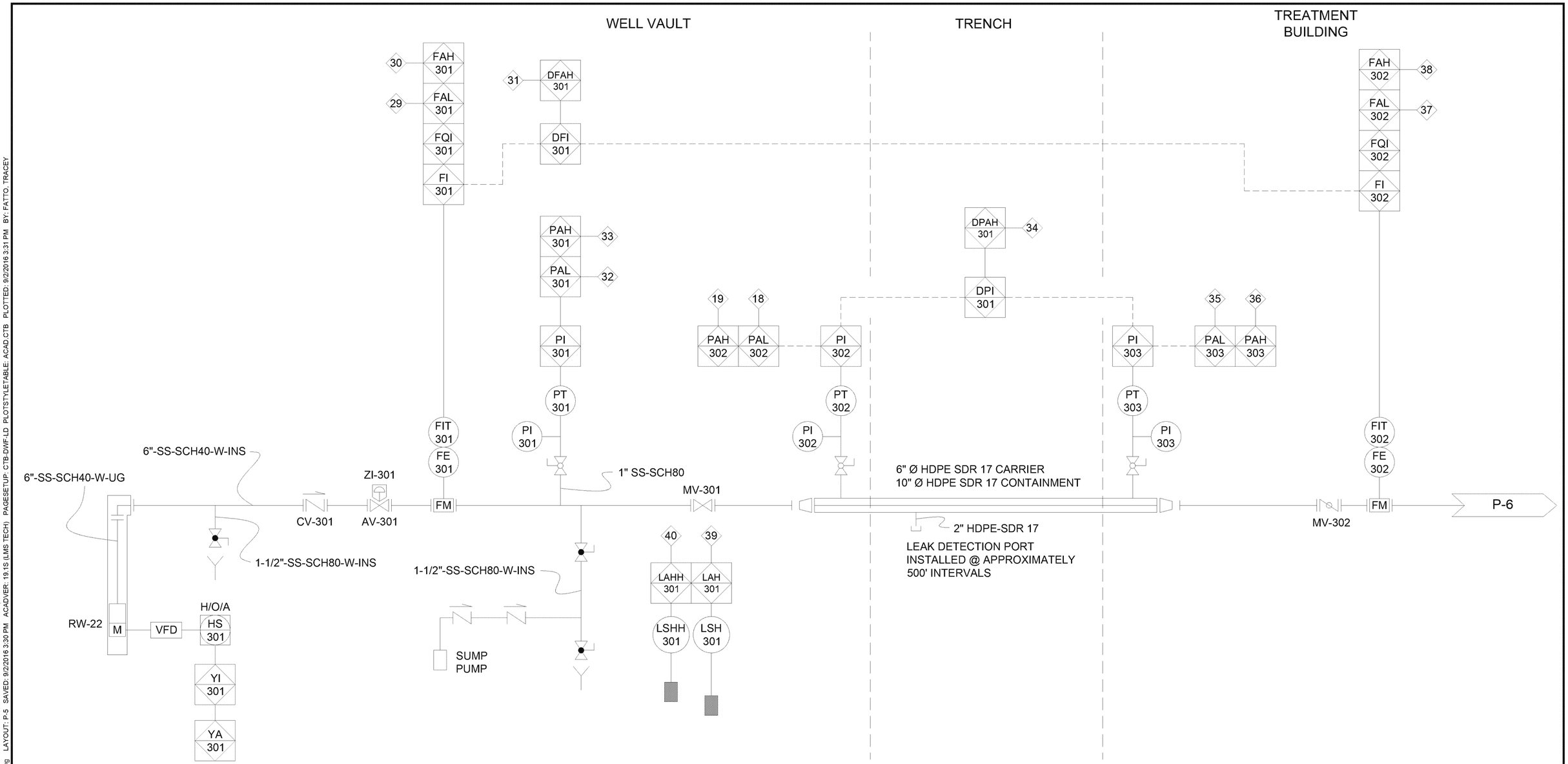

THIS BAR REPRESENTS ONE INCH ON THE ORIGINAL DRAWING:	USE TO VERIFY FIGURE REPRODUCTION SCALE	No. / Date / Revisions / By / Ckd	Professional Engineer's Name		
			Professional Engineer's No.		
			State	Date Signed	Project Mgr.
			Designed by	Drawn by	Checked by

THIS DRAWING IS THE PROPERTY OF THE ARCADIS ENTITY IDENTIFIED IN THE TITLE BLOCK AND MAY NOT BE REUSED OR ALTERED IN WHOLE OR IN PART WITHOUT THE EXPRESS WRITTEN PERMISSION OF SAME.

ARCADIS Design & Consultancy for natural and built assets

ARCADIS OF NEW YORK, INC.

NO ALTERATIONS PERMITTED HEREON EXCEPT AS PROVIDED UNDER SECTION 7209 SUBDIVISION 2 OF THE NEW YORK STATE EDUCATION LAW

NORTHROP GRUMMAN SYSTEMS CORPORATION • OPERABLE UNIT 3 • BETHPAGE, NEW YORK

RW-21 AREA - 60% REMEDIAL DESIGN

PIPING AND INSTRUMENTATION DIAGRAM (SHEET 3 OF 5)

ARCADIS Project No. NY001496.2415.R33E3

Date AUGUST 2016

ARCADIS
2 HUNTINGTON QUADRANGLE
SUITE 1S10
MELVILLE, NEW YORK
Tel: 631.249.7600

P-5

CITY:CRANBURY-NJ DIV/GROUP:ENVCAD DB:A.SANCHEZ, T.FATTO LD: PIC: PM: C.SANGIOVANNI TM: LYR:ON=*;OFF=*REF*
G:\ENVCAD\CRANBURY\ACTNY001496\2415\R33E3\DWG\NY001496D05.dwg LAYOUT: P-5 SAVED: 9/2/2016 3:30 PM ACADVER: 19.1S (LMS TECH) PAGESETUP: CTB-DWF-LD PLOTSTYLETABLE: ACAD.CTB PLOTTED: 9/2/2016 3:31 PM BY: FATTO, TRACEY

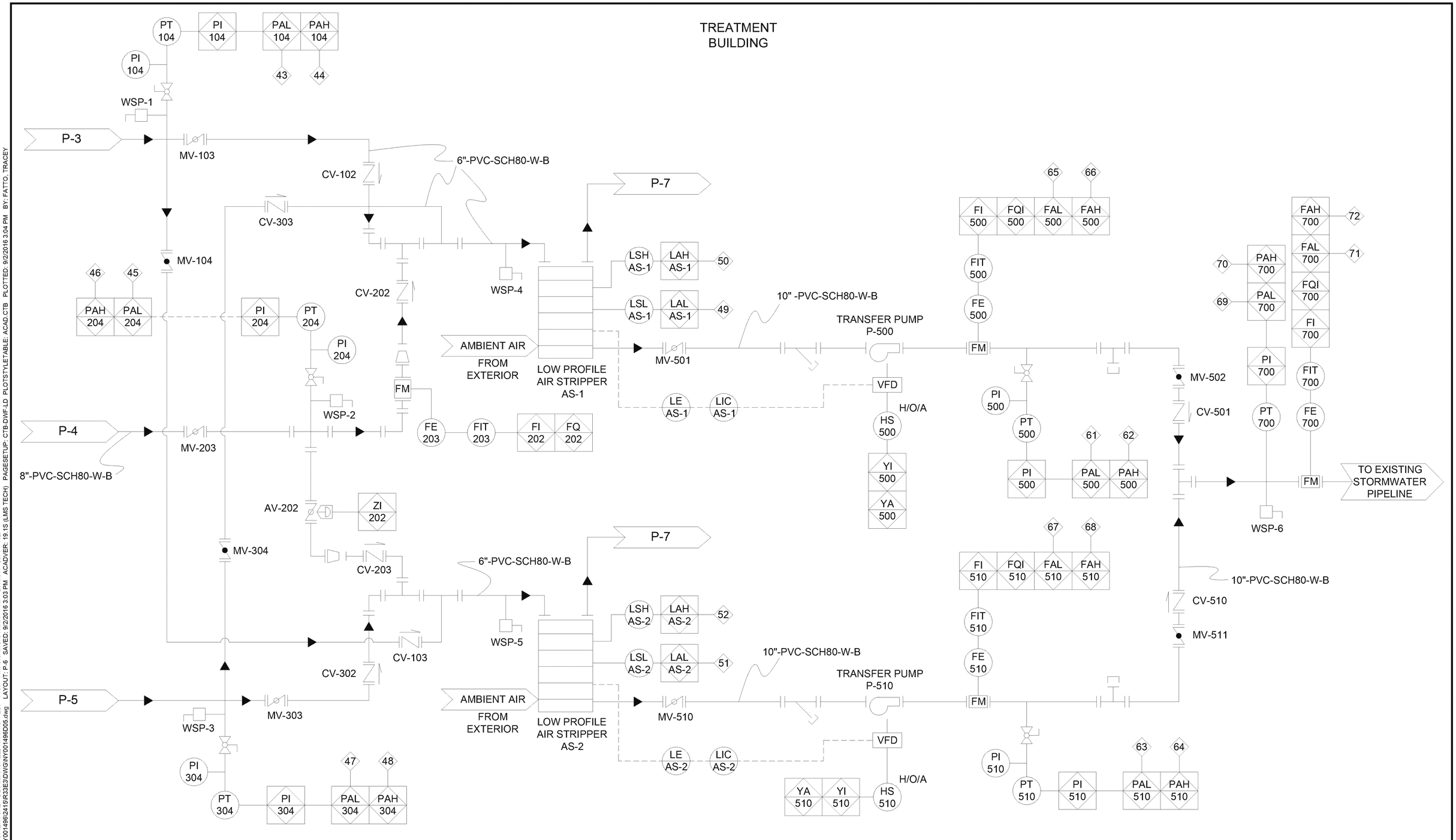

No.	Date	Revisions	By	Ckd

THIS BAR REPRESENTS ONE INCH ON THE ORIGINAL DRAWING:

USE TO VERIFY FIGURE REPRODUCTION SCALE

THIS DRAWING IS THE PROPERTY OF THE ARCADIS ENTITY IDENTIFIED IN THE TITLE BLOCK AND MAY NOT BE REUSED OR ALTERED IN WHOLE OR IN PART WITHOUT THE EXPRESS WRITTEN PERMISSION OF SAME.

Professional Engineer's Name

Professional Engineer's No.

State	Date Signed	Project Mgr.
Designed by	Drawn by	Checked by

ARCADIS Design & Consultancy for natural and built assets

ARCADIS OF NEW YORK, INC.

NO ALTERATIONS PERMITTED HEREON EXCEPT AS PROVIDED UNDER SECTION 7209 SUBDIVISION 2 OF THE NEW YORK STATE EDUCATION LAW

NORTHROP GRUMMAN SYSTEMS CORPORATION • OPERABLE UNIT 3 • BETHPAGE, NEW YORK

RW-21 AREA - 60% REMEDIAL DESIGN

PIPING AND INSTRUMENTATION DIAGRAM (SHEET 4 OF 5)

ARCADIS Project No. NY001496.2415.R33E3

Date AUGUST 2016

ARCADIS
2 HUNTINGTON QUADRANGLE
SUITE 1S10
MELVILLE, NEW YORK
Tel: 631.249.7600

P-6

CITY:CRANBURY-NJ DIV/GROUP:ENVCAD DB:A.SANCHEZ, T.FATTO LD: P/C: PM: C.SANGIOVANNI TM: LYR:ON=*;OFF=*REF*
G:\ENVCAD\CRANBURY\ACT\NY001496\2415\R33E3\DWG\NY001496D05.dwg LAYOUT: P-6 SAVED: 9/2/2016 3:03 PM ACADVER: 19.1S (LMS TECH) PAGESETUP: CTB-DWF-LD PLOTSTYLETABLE: ACAD.CTB PLOTTED: 9/2/2016 3:04 PM BY: FATTO, TRACEY

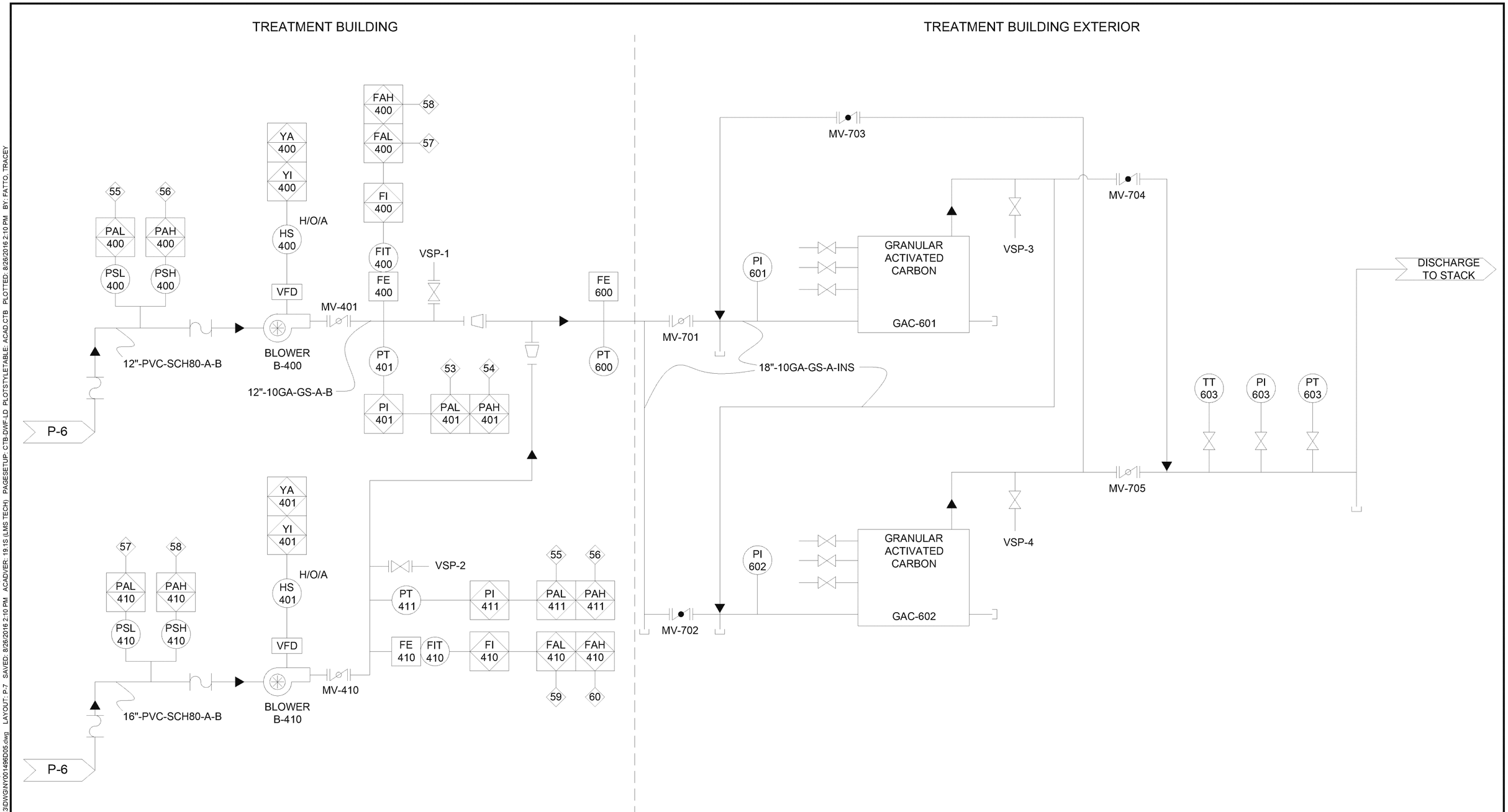

No.	Date	Revisions	By	Ckd

THIS DRAWING IS THE PROPERTY OF THE ARCADIS ENTITY IDENTIFIED IN THE TITLE BLOCK AND MAY NOT BE REUSED OR ALTERED IN WHOLE OR IN PART WITHOUT THE EXPRESS WRITTEN PERMISSION OF SAME.

THIS BAR REPRESENTS ONE INCH ON THE ORIGINAL DRAWING: USE TO VERIFY FIGURE REPRODUCTION SCALE

Professional Engineer's Name
Professional Engineer's No.
State | Date Signed | Project Mgr.
Designed by | Drawn by | Checked by

ARCADIS Design & Consultancy for natural and built assets
ARCADIS OF NEW YORK, INC.
NO ALTERATIONS PERMITTED HEREON EXCEPT AS PROVIDED UNDER SECTION 7209 SUBDIVISION 2 OF THE NEW YORK STATE EDUCATION LAW

NORTHROP GRUMMAN SYSTEMS CORPORATION • OPERABLE UNIT 3 • BETHPAGE, NEW YORK
RW-21 AREA - 60% REMEDIAL DESIGN

PIPING AND INSTRUMENTATION DIAGRAM (SHEET 5 OF 5)

ARCADIS Project No. NY001496.2415.R33E3
Date AUGUST 2016
ARCADIS
2 HUNTINGTON QUADRANGLE
SUITE 1S10
MELVILLE, NEW YORK
Tel: 631.249.7600

P-7

CITY:CRANBURY-NJ DIV/GROUP:ENVCAD DB:A.SANCHEZ, T.FATTO LD: P/C: PM: C.SANGIOVANNI TM: LYR:ON=*;OFF=*REF*
C:\ENVCAD\CRANBURY\ACT\NY001496\2415\R33E3\DWG\NY001496D05.dwg LAYOUT: P-7 SAVED: 8/26/2016 2:10 PM ACADVER: 19.1S (LMS TECH) PAGESETUP: CTB:DWF-LD PLOTSTYLETABLE: ACAD.CTB PLOTTED: 8/26/2016 2:10 PM BY: FATTO, TRACEY

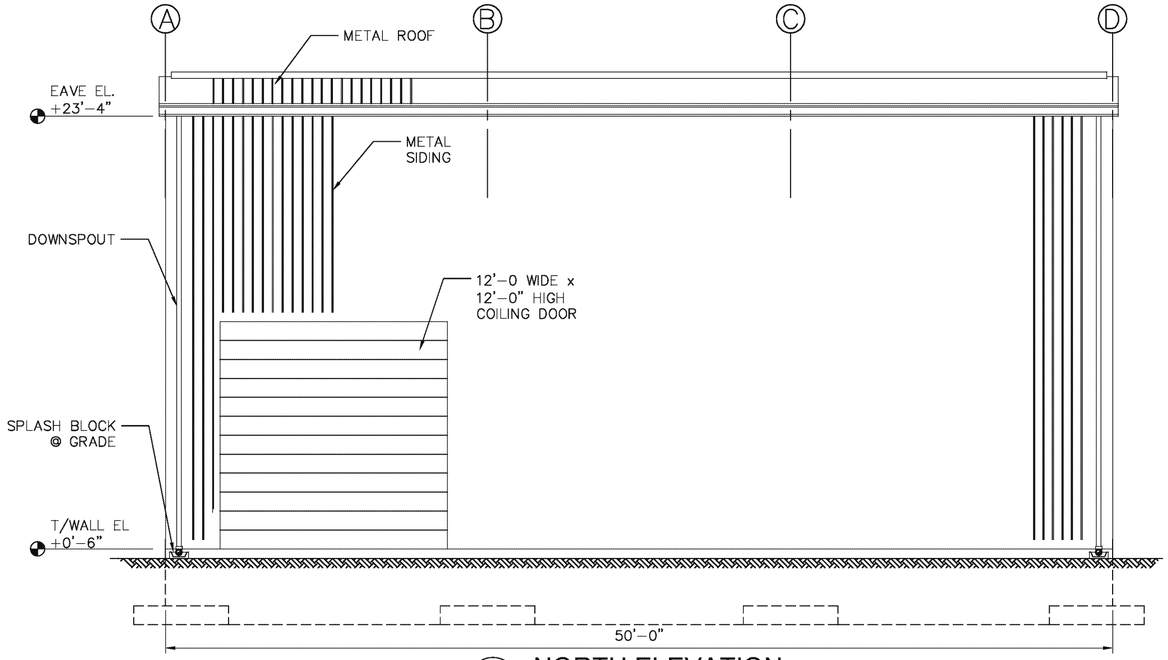

1 S-6 S-6 NORTH ELEVATION
SCALE: 1/4 = 1'-0"

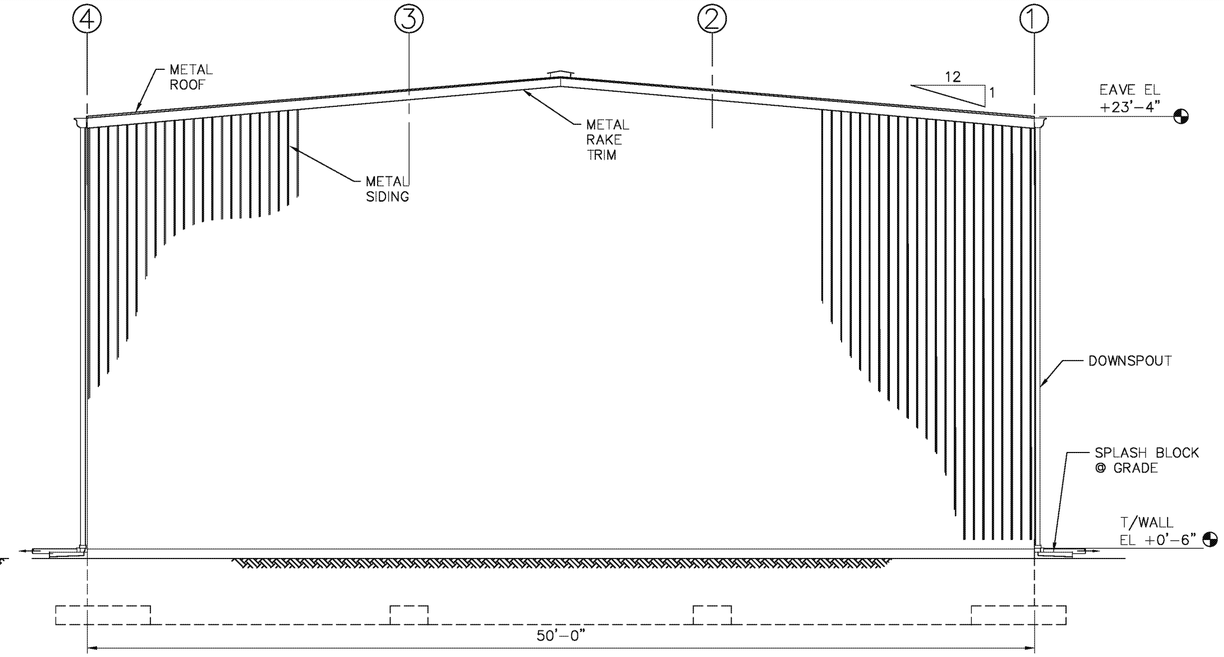

2 S-6 S-6 EAST ELEVATION
SCALE: 1/4" = 1'-0"

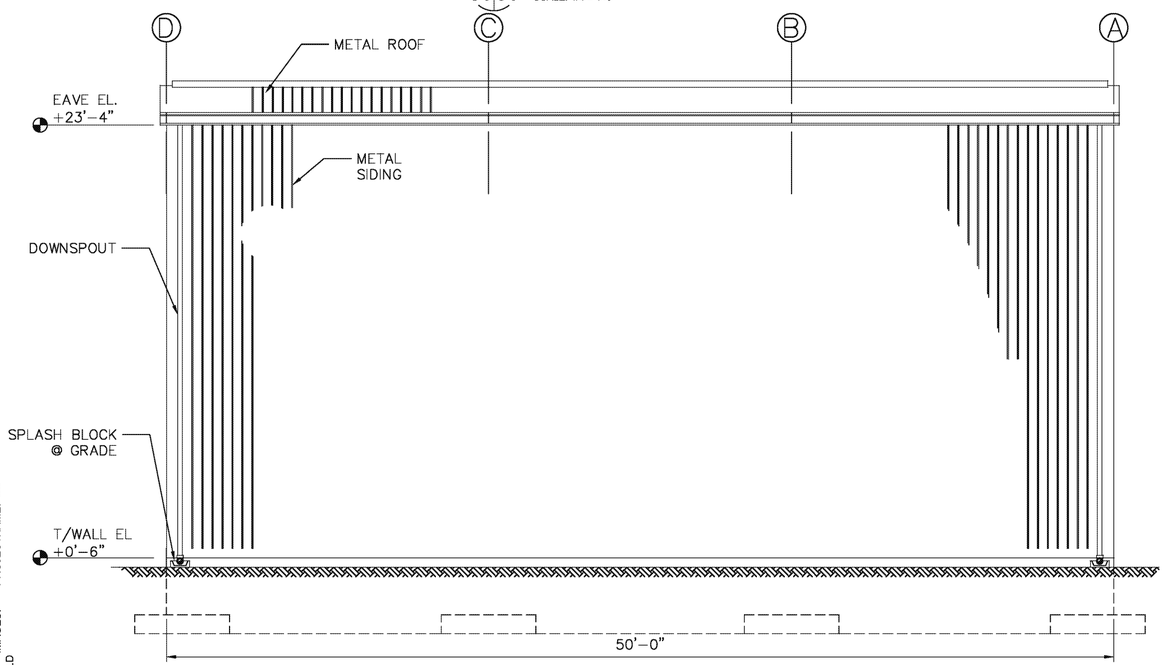

1 S-6 S-6 SOUTH ELEVATION
SCALE: 1/4 = 1'-0"

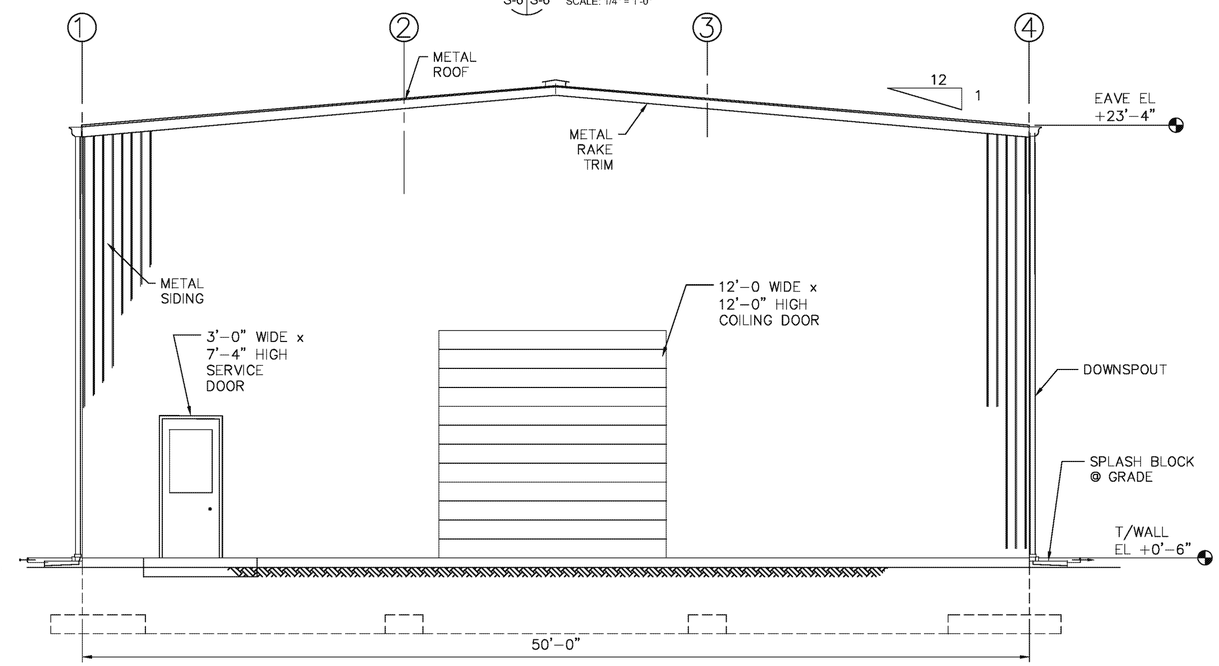

2 S-6 S-6 WEST ELEVATION
SCALE: 1/4" = 1'-0"

CITY: DIV/GROUP: DB: LD: PIC: PM: TM: LYR:ON=*;OFF=*REF*
C:\Users\lbowe\OneDrive - ARCADIS\Project Documents\ARCADIS rojects\Northr Grummond\02-Str ct rail\S-1.dwg LAYOUT: S-1 SAVED: 8/26/2016 2:03 PM ACADVER: 19.1S (LMS TECH) PAGESETUP: ---- PLOTSTYLETABLE: ---- PLOTTED: 8/26/2016 2:08 PM BY: BOWE, LISA
XREFS: IMAGES: PROJECTNAME: ----
XBDR-C-LD

THIS BAR REPRESENTS ONE INCH ON THE ORIGINAL DRAWING:

USE TO VERIFY FIGURE REPRODUCTION SCALE

No.	Date	Revisions	By	Ckd
	06.2016	60% DESIGN SUBMITTAL - ISSUED FOR BID		

THIS DRAWING IS THE PROPERTY OF THE ARCADIS ENTITY IDENTIFIED IN THE TITLE BLOCK AND MAY NOT BE REUSED OR ALTERED IN WHOLE OR IN PART WITHOUT THE EXPRESS WRITTEN PERMISSION OF SAME.

Professional Engineer's Name
Professional Engineer's No.
State | Date Signed | Project Mgr.
Designed by | Drawn by G. DAVIS | Checked by

ARCADIS Design & Consultancy for natural and built assets
ARCADIS OF NEW YORK, INC.
NO ALTERATIONS PERMITTED HEREON EXCEPT AS PROVIDED UNDER SECTION 7209 SUBDIVISION 2 OF THE NEW YORK STATE EDUCATION LAW

NORTHROP GRUMMAN SYSTEMS CORPORATION ● OPERABLE UNIT 3 ● BETHPAGE, NEW YORK
AREA 21 - 60% REMEDIAL DESIGN

TREATMENT BUILDING ELEVATIONS

ARCADIS Project No.
NY001496.2415.R33E3
Date
AUGUST 2016

ARCADIS
2 HUNTINGTON QUADRANGLE
SUITE 1S10
MELVILLE, NEW YORK
TEL. 631.249.7600

S-1

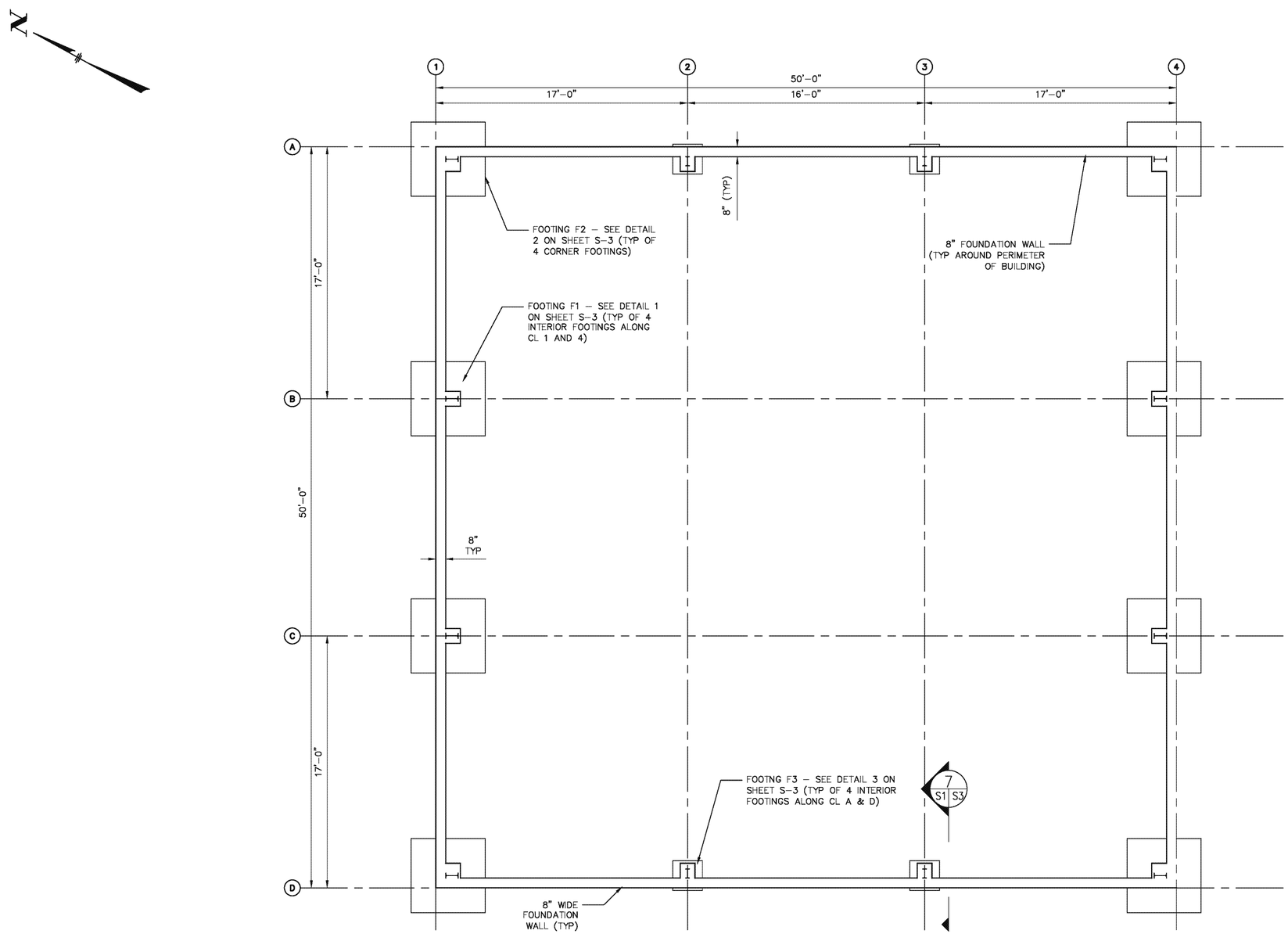

1 S-3 | S-3 **FOUNDATION PLAN**

SCALE: 1/4" = 1'-0"

NOTES:
1. FOUNDATION DESIGN MUST BE VERIFIED BASED ON BUILDING MANUFACTURER SHOP DRAWINGS AND GEOTECHNICAL RECOMMENDATIONS
2. SEE SHEET S-3 FOR ADDITIONAL FOUNDATION DETAILS.

THIS BAR REPRESENTS ONE INCH ON THE ORIGINAL DRAWING: USE TO VERIFY FIGURE REPRODUCTION SCALE

No.	Date	Revisions	By	Ckd
	06.2016	60% DESIGN SUBMITTAL - ISSUED FOR BID		

THIS DRAWING IS THE PROPERTY OF THE ARCADIS ENTITY IDENTIFIED IN THE TITLE BLOCK AND MAY NOT BE REUSED OR ALTERED IN WHOLE OR IN PART WITHOUT THE EXPRESS WRITTEN PERMISSION OF SAME.

Professional Engineer's Name
Professional Engineer's No.
State | Date Signed | Project Mgr.
Designed by | Drawn by G. DAVIS | Checked by

ARCADIS Design & Consultancy for natural and built assets
ARCADIS OF NEW YORK, INC.
NO ALTERATIONS PERMITTED HEREON EXCEPT AS PROVIDED UNDER SECTION 7209 SUBDIVISION 2 OF THE NEW YORK STATE EDUCATION LAW

NORTHROP GRUMMAN SYSTEMS CORPORATION • OPERABLE UNIT 3 • BETHPAGE, NEW YORK
AREA 21 - 60% REMEDIAL DESIGN

TREATMENT BUILDING FOUNDATION PLAN

ARCADIS Project No. NY001496.2415.R33E3
Date AUGUST 2016
ARCADIS
2 HUNTINGTON QUADRANGLE
SUITE 1S10
MELVILLE, NEW YORK
TEL. 631.249.7600

S-2

CITY: DIV/GROUP: DB: LD: PIC: PM: TM: LYR:ON=*;OFF=*REF*
C:\Users\lbowe\OneDrive - ARCADIS\Project Documents\ARCADIS rojects\Northr Grummond\02-Str ct ral\S-2.dwg LAYOUT: S-2 SAVED: 8/26/2016 2:04 PM ACADVER: 19.1S (LMS TECH) PAGESETUP: ---- PLOTSTYLETABLE: ---- PLOTTED: 8/26/2016 2:09 PM BY: BOWE, LISA
XREFS: IMAGES: PROJECTNAME: ----
XBDR-C-LD

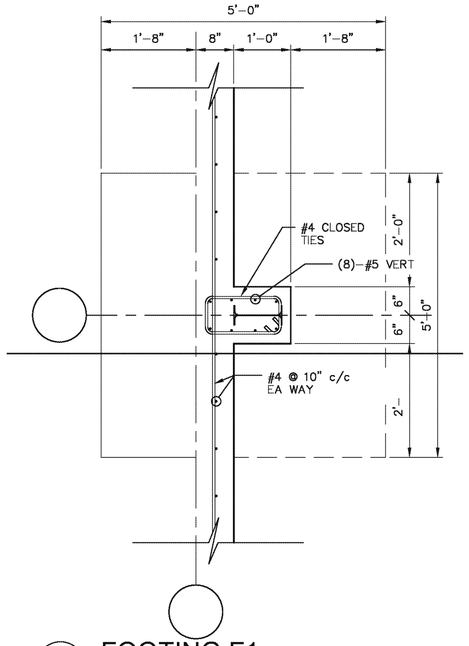

1 S-1 S-3 FOOTING F1
SCALE: 3/4" = 1'-0"

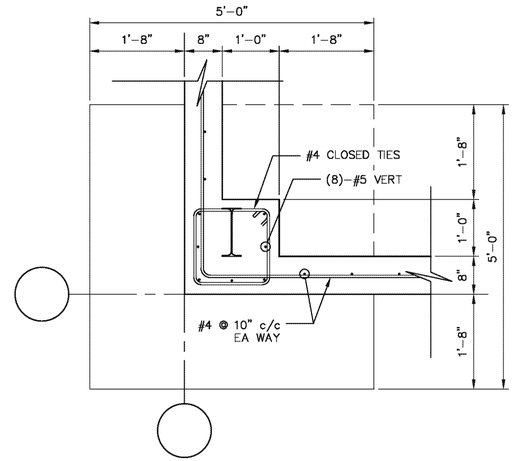

2 S-1 S-3 FOOTING F2
SCALE: 3/4" = 1'-0"

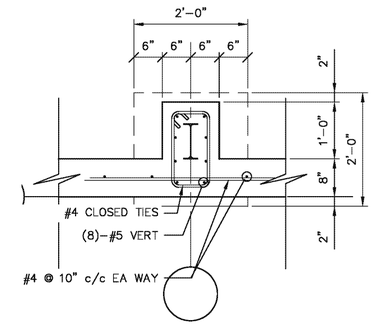

4 S-3 S-3 FOOTING F3
SCALE: 3/4" = 1'-0"

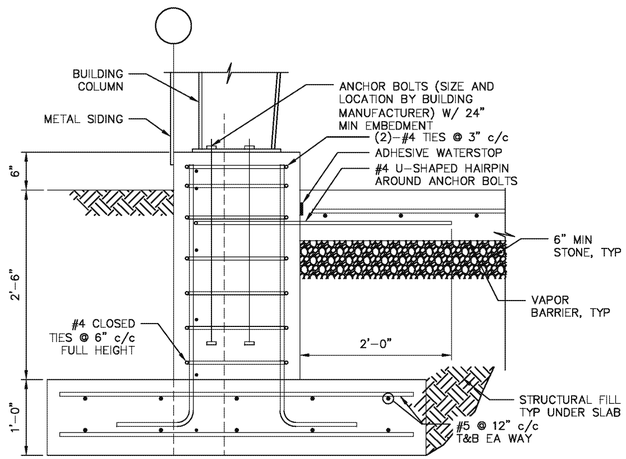

7 S-1 S-3 TYPICAL FOUNDATION SECTION
SCALE: 1" = 1'-0"

CITY: DIV/GROUP: DB: LD: PIC: PM: TM: LYR:ON=*;OFF=*REF*
C:\Users\lbowe\OneDrive - ARCADIS\Project Documents\ARCADIS rojects\Northr Grumman\02-Str ct rail\S-3.dwg LAYOUT: S-3 SAVED: 8/26/2016 2:06 PM ACADVER: 19.1S (LMS TECH) PAGESETUP: ---- PLOTSTYLETABLE: ---- PLOTTED: 8/26/2016 2:07 PM BY: BOWE, LISA
XREFS: IMAGES: PROJECTNAME: ----
XBDR-C-LD

THIS BAR REPRESENTS ONE INCH ON THE ORIGINAL DRAWING: USE TO VERIFY FIGURE REPRODUCTION SCALE

No.	Date	Revisions	By	Ckd
	06.2016	60% DESIGN SUBMITTAL - ISSUED FOR BID		

THIS DRAWING IS THE PROPERTY OF THE ARCADIS ENTITY IDENTIFIED IN THE TITLE BLOCK AND MAY NOT BE REUSED OR ALTERED IN WHOLE OR IN PART WITHOUT THE EXPRESS WRITTEN PERMISSION OF SAME.

Professional Engineer's Name
Professional Engineer's No.
State | Date Signed | Project Mgr.
Designed by | Drawn by G. DAVIS | Checked by

ARCADIS Design & Consultancy for natural and built assets
ARCADIS OF NEW YORK, INC.
NO ALTERATIONS PERMITTED HEREON EXCEPT AS PROVIDED UNDER SECTION 7209 SUBDIVISION 2 OF THE NEW YORK STATE EDUCATION LAW

NORTHROP GRUMMAN SYSTEMS CORPORATION ● OPERABLE UNIT 3 ● BETHPAGE, NEW YORK
AREA 21 - 60% REMEDIAL DESIGN

TREATMENT BUILDING FOUNDATION DETAILS

ARCADIS Project No. NY001496.2415.R33E3
Date AUGUST 2016
ARCADIS
2 HUNTINGTON QUADRANGLE
SUITE 1S10
MELVILLE, NEW YORK
TEL. 631.249.7600

S-3

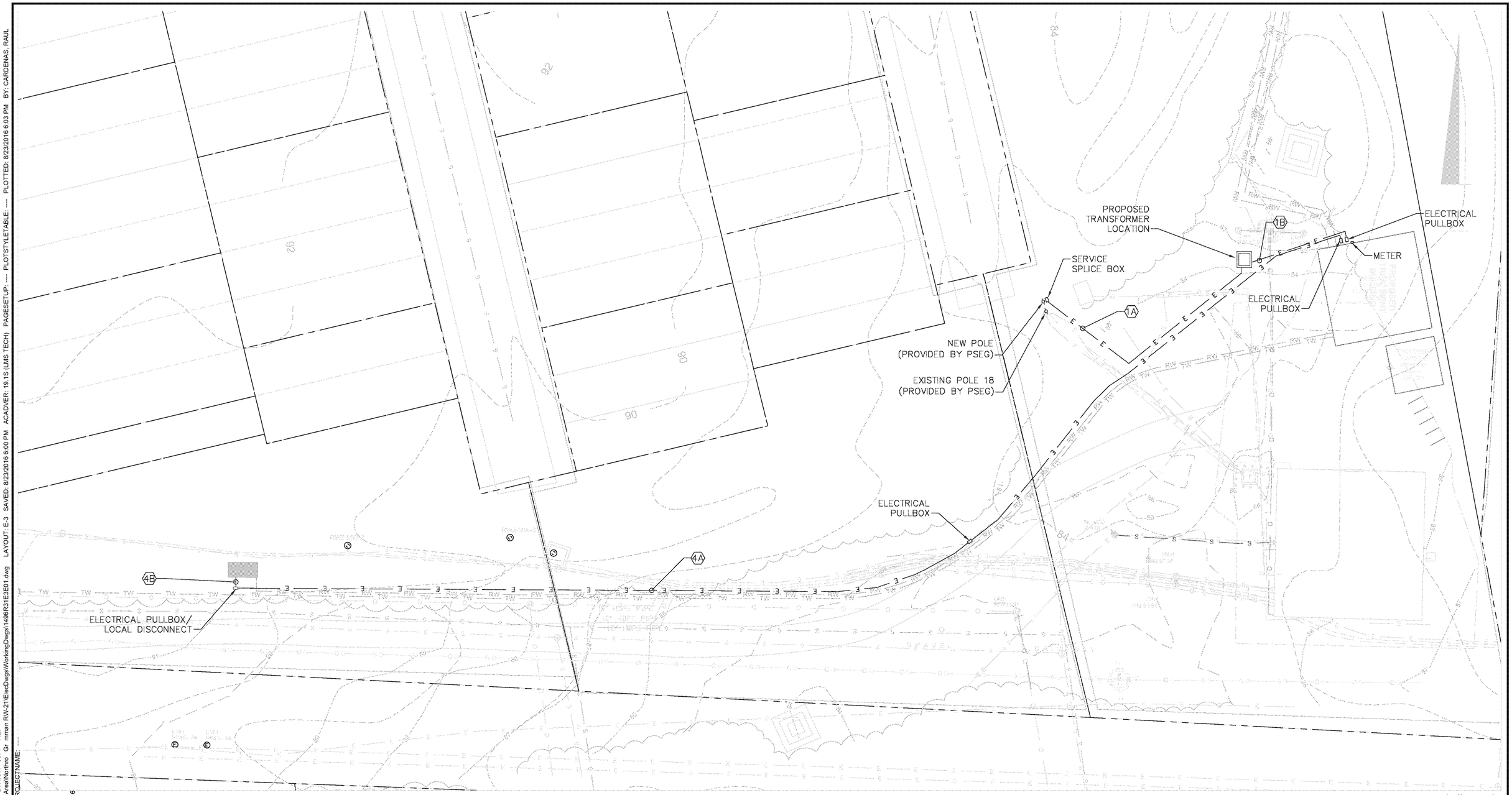

SCALE: 1/2"=12'

DRAFT

CITY: DIV/GROUP: DB: LD: PIC: PM: TM: LYR:ON=*;OFF=*REF*
C:\Users\cardenas\Documents\Projects\Enviro\GM-38 Area\Northrop Grumman RW-21\ElecDwgs\WorkingDwgs\1496R31E3E01.dwg LAYOUT: E-3 SAVED: 8/23/2016 6:00 PM ACADVER: 19.1S (LMS TECH) PAGESETUP: ---- PLOTSTYLETABLE: ---- PLOTTED: 8/23/2016 6:03 PM BY: CARDENAS, RAUL

XREFS: IMAGES: PROJECTNAME:
X:\BDR-C-LD Va lt Layo ts
1496R33E3M01
X:\R33E302
X:\R33E3-GISinfo
X:\ProConvayLinesR3
X:\RW-21E tUIU date08-05-16

DRAWING NOT TO SCALE
SCALE(S) AS INDICATED

THIS BAR REPRESENTS ONE INCH ON THE ORIGINAL DRAWING:

USE TO VERIFY FIGURE REPRODUCTION SCALE

No.	Date	Revisions	By	Ckd

THIS DRAWING IS THE PROPERTY OF THE ARCADIS ENTITY IDENTIFIED IN THE TITLE BLOCK AND MAY NOT BE REUSED OR ALTERED IN WHOLE OR IN PART WITHOUT THE EXPRESS WRITTEN PERMISSION OF SAME

Professional Engineer's Name

Professional Engineer's No.

State	Date Signed	Project Mgr.
Designed by	Drawn by	Checked by

ARCADIS Design & Consultancy for natural and built assets

ARCADIS OF NEW YORK, INC.

NO ALTERATIONS PERMITTED HEREON EXCEPT AS PROVIDED UNDER SECTION 7209 SUBDIVISION 2 OF THE NEW YORK STATE EDUCATION LAW

NORTHROP GRUMMAN SYSTEMS CORPORATION • OPERABLE UNIT 3 • BETHPAGE, NEW YORK

AREA 21 - 60% REMEDIAL DESIGN

ELECTRICAL SITE PLAN TREATMENT BUILDING AND RW-22

ELECTRICAL

ARCADIS Project No.
NY001496.2415.R33E3

Date
JUNE 2016

ARCADIS
2 HUNTINGTON QUADRANGLE
SUITE 1S10
MELVILLE, NEW YORK
TEL. 631.249.7600

E-1

CITY: DIV/GROUP: DB: LD: PIC: PM: TM: LYR:ON=*;OFF=REF*
C:\Users\rcardenas\Documents\Projects\Enviro\GM-38 Area\Northro Gr mman RW-21\ElecDwgs\WorkingDwgs\1496R31E3E01.dwg LAYOUT: E-4 SAVED: 8/23/2016 6:00 PM ACADVER: 19.1S (LMS TECH) PAGESETUP: ---- PLOTSTYLETABLE: ---- PLOTTED: 8/23/2016 6:03 PM BY: CARDENAS, RAUL
XREFS: IMAGES: PROJECTNAME: ----
XrBDR-C-LD
Va lt Layo ts
1496R33E3M01
XR33E302
XR33E3-GISinfo
XrProConvayLinesR3
XrRW-21E tUIlU date08-05-16

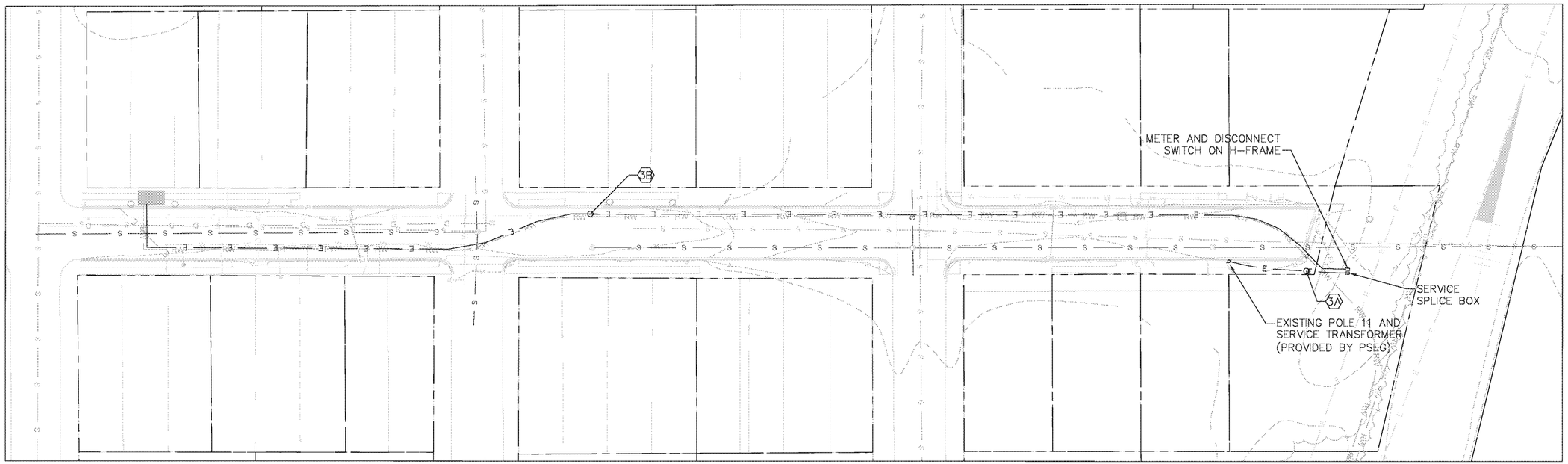

RW-20 SITE PLAN
SCALE: 3/8"=12'

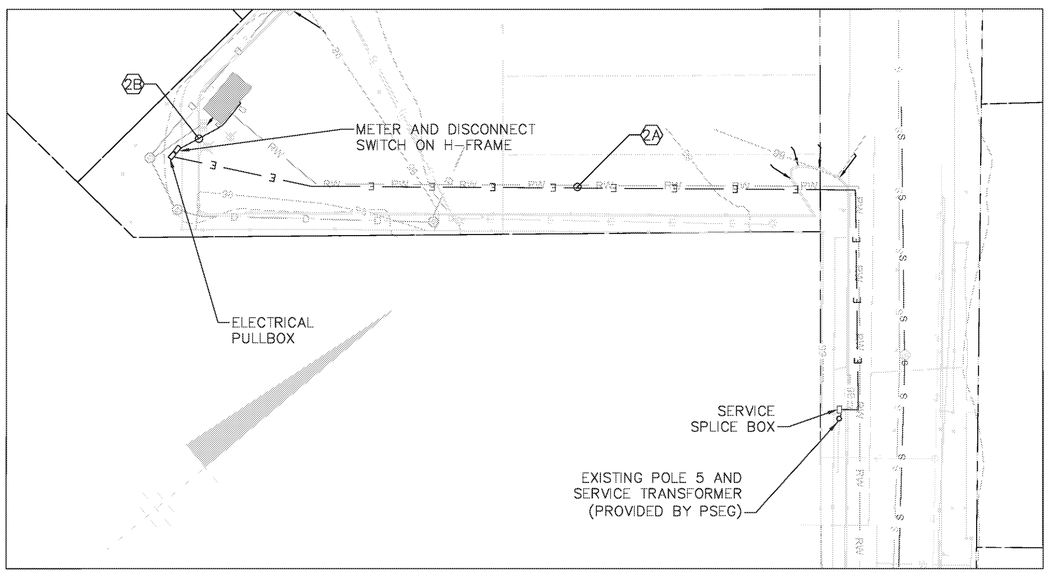

RW-21 SITE PLAN
SCALE: 1/2"=12'

⟨XX⟩ CONDUIT TAG, REFER TO DWG E-7 FOR CONDUIT AND CABLE SCHEDULE.

DRAFT

DRAWING NOT TO SCALE
SCALE(S) AS INDICATED

THIS BAR REPRESENTS ONE INCH ON THE ORIGINAL DRAWING: USE TO VERIFY FIGURE REPRODUCTION SCALE

No.	Date	Revisions	By	Ckd

THIS DRAWING IS THE PROPERTY OF THE ARCADIS ENTITY IDENTIFIED IN THE TITLE BLOCK AND MAY NOT BE REUSED OR ALTERED IN WHOLE OR IN PART WITHOUT THE EXPRESS WRITTEN PERMISSION OF SAME

Professional Engineer's Name
Professional Engineer's No.
State | Date Signed | Project Mgr.
Designed by | Drawn by | Checked by

ARCADIS Design & Consultancy for natural and built assets
ARCADIS OF NEW YORK, INC.

NO ALTERATIONS PERMITTED HEREON EXCEPT AS PROVIDED UNDER SECTION 7209 SUBDIVISION 2 OF THE NEW YORK STATE EDUCATION LAW

NORTHROP GRUMMAN SYSTEMS CORPORATION ● OPERABLE UNIT 3 ● BETHPAGE, NEW YORK
AREA 21 - 60% REMEDIAL DESIGN

ELECTRICAL SITE PLAN
WELL VAULTS RW-20 AND RW-21

ELECTRICAL

ARCADIS Project No.
NY001496.2415.R33E3

Date
JUNE 2016

ARCADIS
2 HUNTINGTON QUADRANGLE
SUITE 1S10
MELVILLE, NEW YORK
TEL. 631.249.7600

E-2

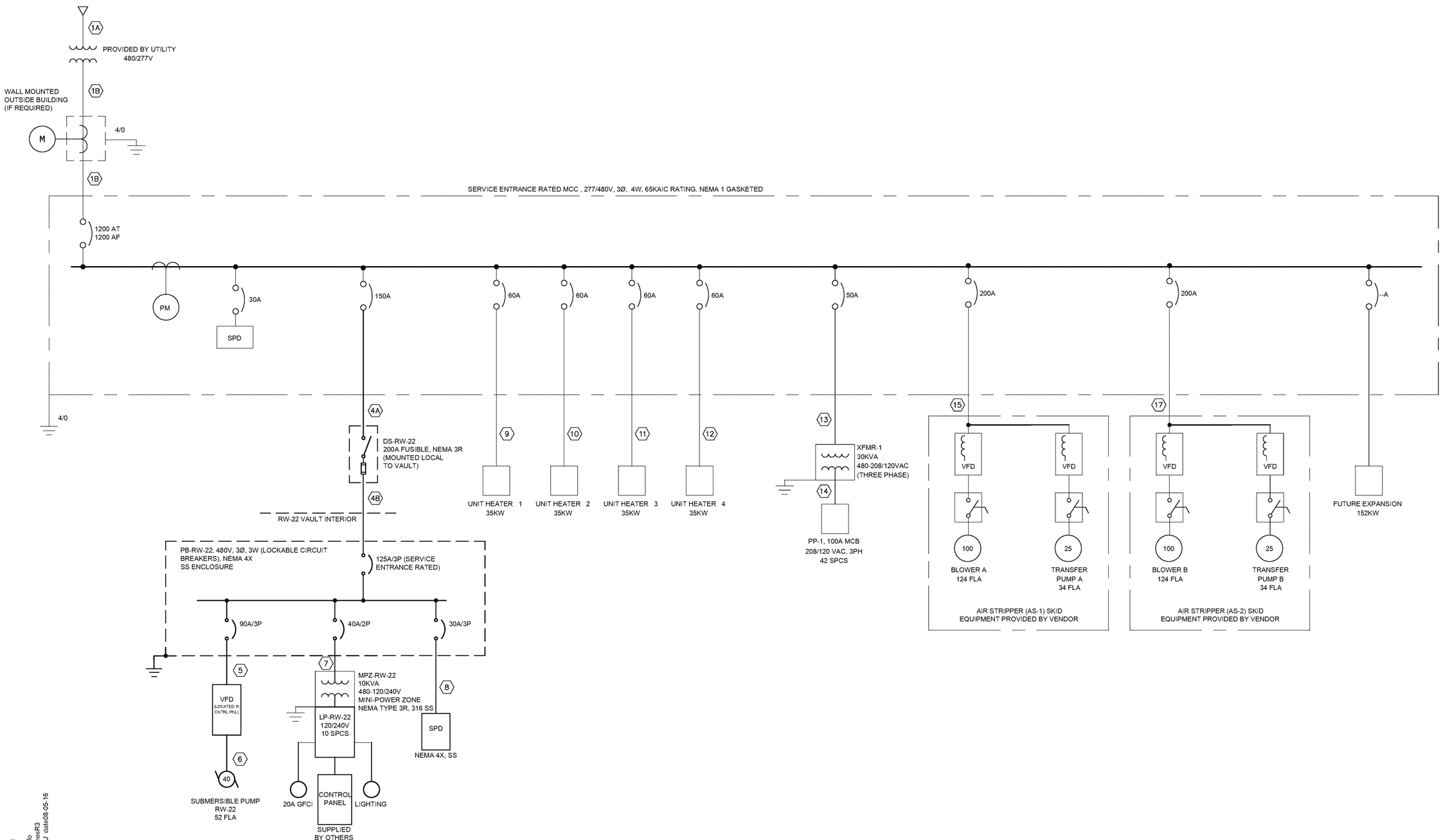

DRAFT

XREFS: X:\BDR-C-LD Va lt Layo ts 1496R33E3M01 X:\R33E302 X:\R33E3-GISinfo X:\ProConvayLinesR3 X:\RW-21E tUIU date08-05-16 IMAGES: PROJECTNAME: ----

CITY: DIV/GROUP: DB: LD: PIC: PM: TM: LYR:ON=*;OFF=*REF* C:\Users\rcardenas\Doc ments\Projects\Enviro\GM-38 Area\Northro Gr mman RW-21\ElecDwgs\WorkingDwgs\1496R31E3E01.dwg LAYOUT: E-2 SAVED: 8/23/2016 6:00 PM ACADVER: 19.1S (LMS TECH) PAGESETUP: ---- PLOTSTYLETABLE: ---- PLOTTED: 8/23/2016 6:01 PM BY: CARDENAS, RAUL

DRAWING NOT TO SCALE
SCALE(S) AS INDICATED

THIS BAR REPRESENTS ONE INCH ON THE ORIGINAL DRAWING: USE TO VERIFY FIGURE REPRODUCTION SCALE

No.	Date	Revisions	By	Ckd

THIS DRAWING IS THE PROPERTY OF THE ARCADIS ENTITY IDENTIFIED IN THE TITLE BLOCK AND MAY NOT BE REUSED OR ALTERED IN WHOLE OR IN PART WITHOUT THE EXPRESS WRITTEN PERMISSION OF SAME

Professional Engineer's Name
Professional Engineer's No.
State | Date Signed | Project Mgr.
Designed by | Drawn by | Checked by

ARCADIS Design & Consultancy for natural and built assets
ARCADIS OF NEW YORK, INC.
NO ALTERATIONS PERMITTED HEREON EXCEPT AS PROVIDED UNDER SECTION 7209 SUBDIVISION 2 OF THE NEW YORK STATE EDUCATION LAW

NORTHROP GRUMMAN SYSTEMS CORPORATION • OPERABLE UNIT 3 • BETHPAGE, NEW YORK
AREA 21 - 60% REMEDIAL DESIGN

ELECTRICAL ONE-LINE TREATMENT BUILDING AND RW-22

ELECTRICAL

ARCADIS Project No.
NY001496.2415.R33E3
Date
JUNE 2016
ARCADIS
2 HUNTINGTON QUADRANGLE
SUITE 1S10
MELVILLE, NEW YORK
TEL. 631.249.7600

E-3

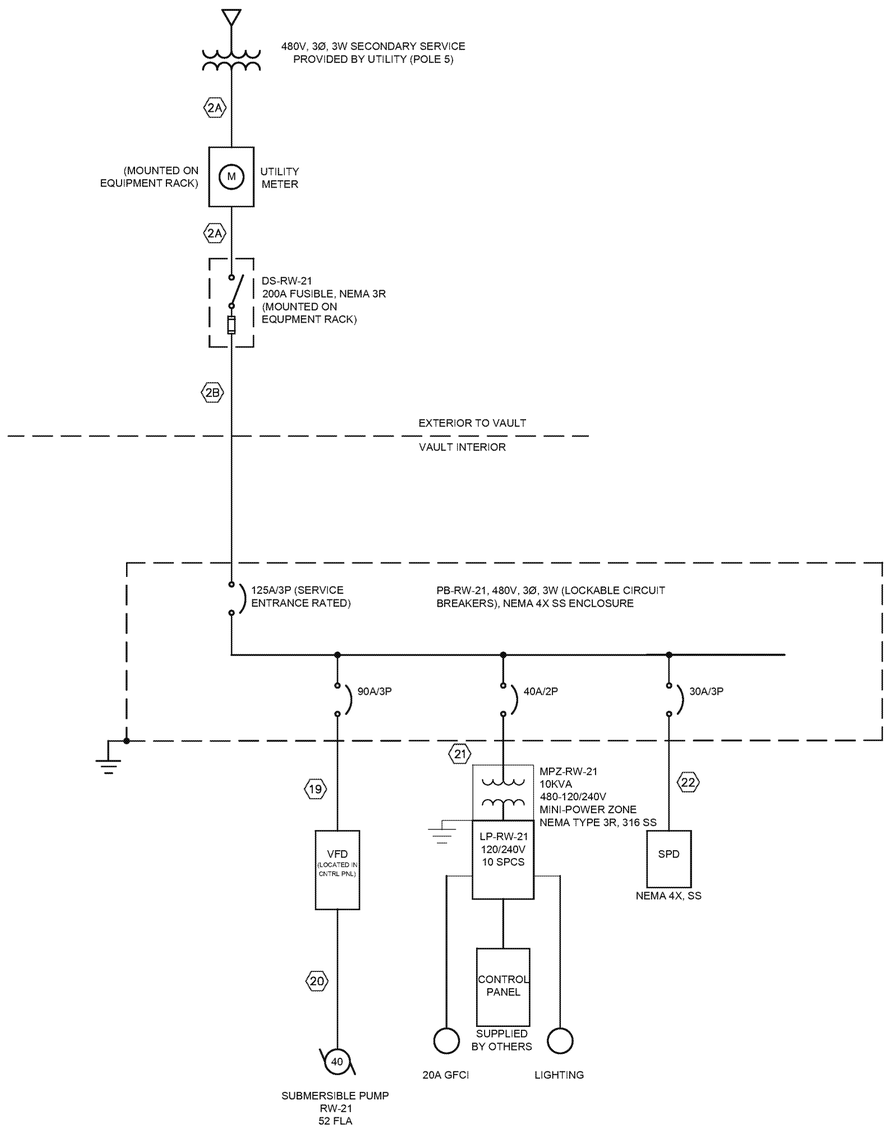

480V VAULT RW–21
ONE LINE DIAGRAM

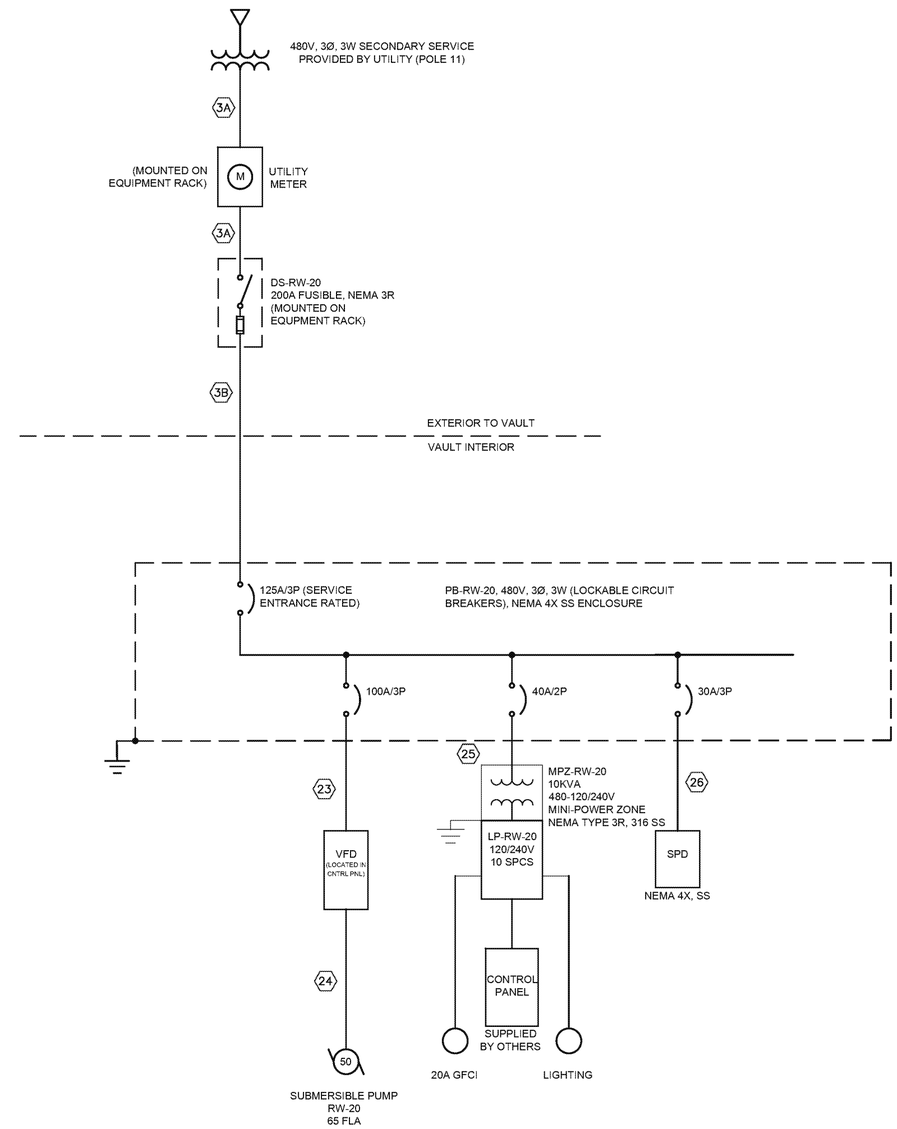

480V VAULT RW–20
ONE LINE DIAGRAM

DRAFT

CITY: DIV/GROUP: DB: LD: PIC: PM: TM: LYR:ON=*;OFF=REF*
C:\Users\rcardenas\Documents\Projects\Enviro\GM-38 Area\Northrop Grumman RW-21\ElecDwgs\WorkingDwgs\1496R31E3E01.dwg LAYOUT: E-1 SAVED: 8/23/2016 6:00 PM ACADVER: 19.1S (LMS TECH) PAGESETUP: ---- PLOTSTYLETABLE: ---- PLOTTED: 8/23/2016 6:01 PM BY: CARDENAS, RAUL

XREFS: IMAGES: PROJECTNAME: ----
XrBDR-C-LD
Va. lt Layo ts
1496R33E3M01
XrR33E302
XrR33E3-GISinfo
XrProConvayLinesR3
XrRW-21E tUIU date08-05-16

DRAWING NOT TO SCALE
SCALE(S) AS INDICATED

THIS BAR REPRESENTS ONE INCH ON THE ORIGINAL DRAWING: USE TO VERIFY FIGURE REPRODUCTION SCALE

No.	Date	Revisions	By	Ckd

THIS DRAWING IS THE PROPERTY OF THE ARCADIS ENTITY IDENTIFIED IN THE TITLE BLOCK AND MAY NOT BE REUSED OR ALTERED IN WHOLE OR IN PART WITHOUT THE EXPRESS WRITTEN PERMISSION OF SAME

Professional Engineer's Name
Professional Engineer's No.
State | Date Signed | Project Mgr.
Designed by | Drawn by | Checked by

ARCADIS Design & Consultancy for natural and built assets
ARCADIS OF NEW YORK, INC.
NO ALTERATIONS PERMITTED HEREON EXCEPT AS PROVIDED UNDER SECTION 7209 SUBDIVISION 2 OF THE NEW YORK STATE EDUCATION LAW

NORTHROP GRUMMAN SYSTEMS CORPORATION ● OPERABLE UNIT 3 ● BETHPAGE, NEW YORK
AREA 21 - 60% REMEDIAL DESIGN

ELECTRICAL ONE-LINE WELL VAULTS RW-20 AND RW-21

ELECTRICAL

ARCADIS Project No.
NY001496.2415.R33E3
Date
JUNE 2016

ARCADIS
2 HUNTINGTON QUADRANGLE
SUITE 1S10
MELVILLE, NEW YORK
TEL. 631.249.7600

E-4

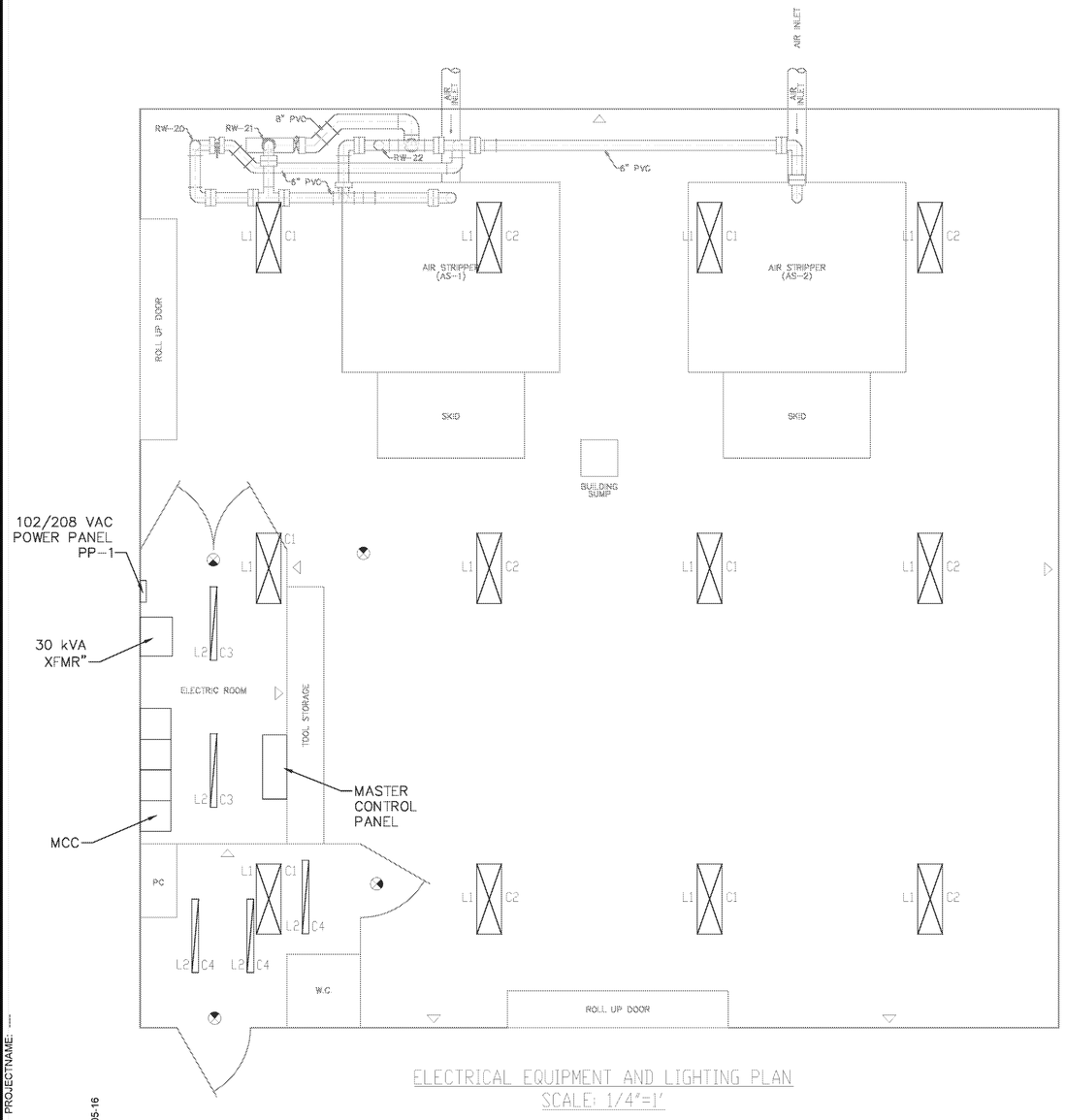

ELECTRICAL EQUIPMENT AND LIGHTING PLAN
SCALE: 1/4"=1'

LUMINAIRE SCHEDULE

TYPE	SYMBOL	LAMPS QUANTITY	LAMPS TYPE	CONNECTED WATTS	LUMINAIRE DESCRIPTION	MANUFACTURER / CATALOG NUMBER	COMMENTS
L1		12	LED	100W PER FIXTURE @120V	HIGH BAY, 9,000 LUMENS, WIDE DISTRIBUTION, SEMI-DIFFUSE ACRYLIC LENS. 120 VOLTS, COLOR TEMPERATURE 70 CRI, 5000K CCT. SUSPENDED 24" FROM CEILING W/HANGER CHAINS	LITHONIA CAT NO. TBL 9L WD SD125 120 LP750 DLC WITH HC36 ACCESSORY	HIGH CEILING LUMINAIRE
L2		10 (2 PER FIXTURE)	54T5HO	108W PER FIXTURE	SURFACE-MOUNTED INDUSTRIAL FLUORESCENT LUMINAIRE WITH FIBERGLASS REINFORCED POLYESTER HOUSING, 120-277V	LITHONIA CAT NO. DMW 2 54T5HO 120 GEB10PS90	USED IN THE FOLLOWING ROOMS; ELECTRICAL ROOM, OFFICE
-		-	-	-	EMERGENCY LIGHT	-	-
-		-	-	-	ILLUMINATED EXIT LIGHT	-	-

LIGHTING PLAN LEGEND

'LX' '' 'CX'

APPLIES TO ALL LUMINAIRIES:
'LX'=LUMINAIRE TYPE
'CX'=LIGHTING CIRCUIT

DRAFT

CITY: DIV/GROUP: DB: LD: PIC: PM: TM: LYR:ON=*;OFF=*REF*
C:\Users\cardenas\Documents\Projects\Enviro\GM-38 Area\Northrop Grumman RW-21\ElecDwgs\WorkingDwgs\1496R31E3E01.dwg LAYOUT: E-6 SAVED: 8/23/2016 6:00 PM ACADVER: 19.1S (LMS TECH) PAGESETUP: ---- PLOTSTYLETABLE: ---- PLOTTED: 8/23/2016 6:05 PM BY: CARDENAS, RAUL
XREFS: IMAGES: PROJECTNAME: ----
XrBDR-C-LD
Va 1L Layo ts
1496R33E3M01
XrR33E302
XrR33E3-GISinfo
XrProConvayLinesR3
XrRW-21E 1UIU date08-05-16

DRAWING NOT TO SCALE
SCALE(S) AS INDICATED

THIS BAR REPRESENTS ONE INCH ON THE ORIGINAL DRAWING:

USE TO VERIFY FIGURE REPRODUCTION SCALE

No.	Date	Revisions	By	Ckd

THIS DRAWING IS THE PROPERTY OF THE ARCADIS ENTITY IDENTIFIED IN THE TITLE BLOCK AND MAY NOT BE REUSED OR ALTERED IN WHOLE OR IN PART WITHOUT THE EXPRESS WRITTEN PERMISSION OF SAME

Professional Engineer's Name
Professional Engineer's No.
State | Date Signed | Project Mgr.
Designed by | Drawn by | Checked by

ARCADIS Design & Consultancy for natural and built assets
ARCADIS OF NEW YORK, INC.
NO ALTERATIONS PERMITTED HEREON EXCEPT AS PROVIDED UNDER SECTION 7209 SUBDIVISION 2 OF THE NEW YORK STATE EDUCATION LAW

NORTHROP GRUMMAN SYSTEMS CORPORATION • OPERABLE UNIT 3 • BETHPAGE, NEW YORK
AREA 21 - 60% REMEDIAL DESIGN

TREATMENT BUILDING ELECTRICAL EQUIPMENT AND LIGHTING LAYOUT

ELECTRICAL

ARCADIS Project No.
NY001496.2415.R33E3

Date
JUNE 2016

ARCADIS
2 HUNTINGTON QUADRANGLE
SUITE 1S10
MELVILLE, NEW YORK
TEL. 631.249.7600

E-5

CITY: DIV/GROUP: DB: LD: PIC: PM: TM: LYR:ON=*;OFF=*REF*
C:\Users\rcardenas\Documents\Projects\Enviro\GM-38 Area\Northrop Grumman RW-21\ElecDwgs\WorkingDwgs\1496R31E3E01.dwg LAYOUT: E-5 SAVED: 8/23/2016 6:00 PM ACADVER: 19.1S (LMS TECH) PAGESETUP: ---- PLOTSTYLETABLE: ---- PLOTTED: 8/23/2016 6:04 PM BY: CARDENAS, RAUL
XREFS: IMAGES: PROJECTNAME: ----
X:\BDR-C-LD
Va ll Layo ts
1496R33E3M01
X:\R33E302
X:\R33E3-GISinfo
X:\ProConvayLinesR3
X:\RW-21E fUlIU date08-05-16

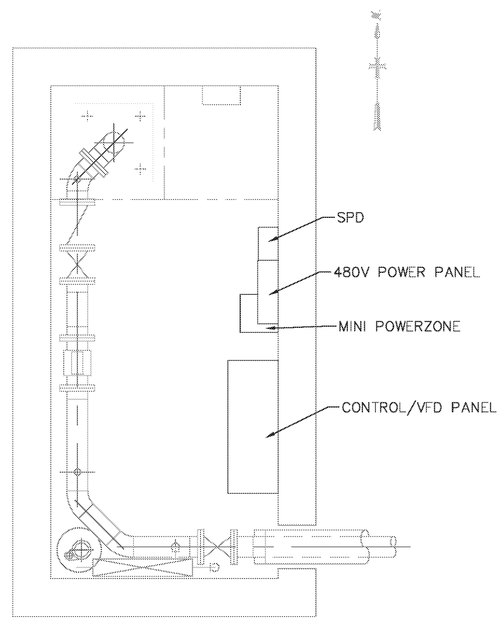

WELL VAULT RW-21
SCALE: 1/2"=1'

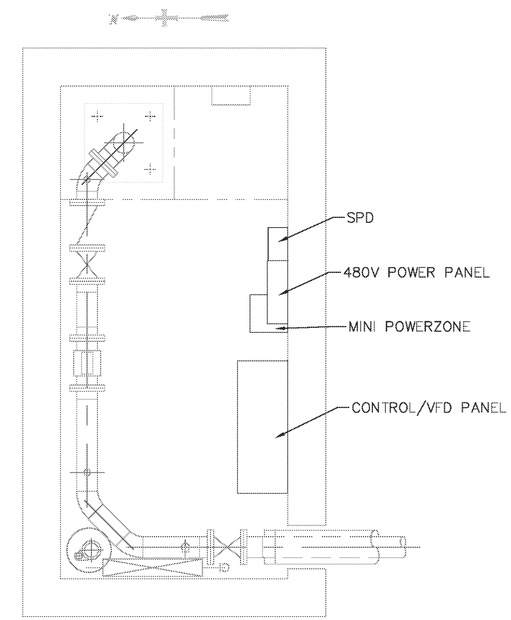

WELL VAULT RW-22
SCALE: 1/2"=1'

DRAFT

DRAWING NOT TO SCALE
SCALE(S) AS INDICATED

THIS BAR REPRESENTS ONE INCH ON THE ORIGINAL DRAWING: USE TO VERIFY FIGURE REPRODUCTION SCALE

No.	Date	Revisions	By	Ckd

THIS DRAWING IS THE PROPERTY OF THE ARCADIS ENTITY IDENTIFIED IN THE TITLE BLOCK AND MAY NOT BE REUSED OR ALTERED IN WHOLE OR IN PART WITHOUT THE EXPRESS WRITTEN PERMISSION OF SAME

Professional Engineer's Name
Professional Engineer's No.
State | Date Signed | Project Mgr.
Designed by | Drawn by | Checked by

ARCADIS Design & Consultancy for natural and built assets
ARCADIS OF NEW YORK, INC.

NO ALTERATIONS PERMITTED HEREON EXCEPT AS PROVIDED UNDER SECTION 7209 SUBDIVISION 2 OF THE NEW YORK STATE EDUCATION LAW

NORTHROP GRUMMAN SYSTEMS CORPORATION • OPERABLE UNIT 3 • BETHPAGE, NEW YORK
AREA 21 - 60% REMEDIAL DESIGN

RW-20, RW-21, AND RW-22 WELL VAULT ELECTRICAL EQUIPMENT LAYOUTS

ELECTRICAL

ARCADIS Project No.
NY001496.2415.R33E3

Date
JUNE 2016

ARCADIS
2 HUNTINGTON QUADRANGLE
SUITE 1S10
MELVILLE, NEW YORK
TEL. 631.249.7600

E-6

PANEL:	PP-1	LOCATION:	ELECTRICAL ROOM			NOTES	CABINET MOUNTING:	SURFACE
VOLTS:	208/120V	PHASE:	3	WIRE:	4	ENCLOSURE: NEMA TYPE 12	RATING:	10 KAIC
MAIN CB:	100AMP							
FEED:	TOP FROM 30KVA TRANSFORMER							

LOAD SERVED	LOAD (KVA) A	LOAD (KVA) B	LOAD (KVA) C	BREAKER AMP	BREAKER POLE	CKT	PH	CKT	BREAKER AMP	BREAKER POLE	LOAD (KVA) A	LOAD (KVA) B	LOAD (KVA) C	LOAD SERVED
MAIN PROCESS FLOOR LGHT CKT #1				20	1	1		2	20	1				MAIN PROCESS FLOOR LGHT CKT #2
ELECTRICAL ROOM LIGHTS				20	1	3		4	20	1				OFFICE LIGHTS
REC-1 CIRCUIT				20	1	5		6	20	1				REC-5 CIRCUIT
REC-2 CIRCUIT				20	1	7		8	20	1				REC-6 CIRCUIT
REC-3 CIRCUIT				20	1	9		10	20	1				REC-7 CIRCUIT
REC-4 CIRCUIT				20	1	11		12	20	1				REC-8 CIRCUIT
SPARE				20	1	13		14	20	1				SPARE
SPARE				20	1	15		16	20	1				SPARE
SPARE				20	1	17		18	20	1				SPARE
SPARE				20	1	19		20	20	1				SPARE
SPACE						21		22						SPACE
SPACE						23		24						SPACE
SPACE						25		26						SPACE
SPACE						27		28						SPACE
SPACE						29		30						SPACE
SPACE						31		32						SPACE
SPACE						33		34						SPACE
SPACE						35		36						SPACE
SPACE						37		38						SPACE
SPACE						39		40						SPACE
SPACE						41		42						SPACE
SUB-TOTAL CONNECTED KVA:	0.00										0.00			0.00
		0.00										0.00		0.00
			0.00										0.00	0.00
													TOTAL CONNECTED KVA :	0.00

CONDUIT ID	SIZE	FROM	TO	VIA	CABLE INSULATION	CBL VOLT.	QUANTITY	SIZE	USE	COMMENTS
1A	4" PVC(80)	NEW PROVIDED PSEG POLE	UTILITY TRANSFORMER (BUILDING)		–	PRIMARY	–	–	–	INSTALL SPARE CONDUIT OF SAME SIZE
1B	3" PVC(80)	UTILITY TRANSFORMER (BUILDING)	TREATMENT BUILDING MCC	METER	XHHW-2	600	3,1	350 KCMIL, 350 KCMIL	P, N	4 SETS (CONDUIT AND CABLE)
2A	3" PVC(80)	UTILITY TRANSFORMER (RW-21)	DS-RW-21 DISCONNECT SWITCH	METER	XHHW-2	600	3	#1	P	INSTALL SPARE OF BOTH CONDUIT AND CABLE
2B	3" PVC(80)	DS-RW-21 DISCONNECT SWITCH	PB-RW-21	–	XHHW-2	600	3	#1	P	–
3A	3" PVC(80)	UTILITY TRANSFORMER (RW-20)	DS-RW-20 DISCONNECT SWITCH	METER	XHHW-2	600	3	1/0	P	INSTALL SPARE OF BOTH CONDUIT AND CABLE
3B	3" PVC(80)	DS-RW-20 DISCONNECT SWITCH	PB-RW-20	–	XHHW-2	600	3	1/0	P	INSTALL SPARE OF BOTH CONDUIT AND CABLE
4A	–	TREATMENT BUILDING MCC	DS-RW-22 DISCONNECT SWITCH	–	THWN	600	3,1	1/0, #4	P,G	–
4B	–	DS-RW-22 DISCONNECT SWITCH	PB-RW-22	–	THWN	600	3,1	1/0, #4	P,G	–
5	–	PB-RW-22	RW-22 VFD/CONTROL PANEL	–	–	600	3,1	–	P,G	–
6	–	RW-22 VFD/CONTROL PANEL	SUB PUMP RW-22	–	–	600	3,1	–	P,G	–
7	–	PB-RW-22	MPZ-RW-22 (10KVA XFMR & PNL)	–	–	600	2,1	–	P,G	–
8	–	PB-RW-22	RW-22 SPD	–	–	600	3,1	–	P,G	–
9	–	TREATMENT BUILDING MCC	TREATMENT BLDG UNIT HEATER #1	–	THWN	600	3,1	–	P,G	–
10	–	TREATMENT BUILDING MCC	TREATMENT BLDG UNIT HEATER #2	–	THWN	600	3,1	–	P,G	–
11	–	TREATMENT BUILDING MCC	TREATMENT BLDG UNIT HEATER #3	–	THWN	600	3,1	–	P,G	–
12	–	TREATMENT BUILDING MCC	TREATMENT BLDG UNIT HEATER #4	–	THWN	600	3,1	–	P,G	–
13	–	TREATMENT BUILDING MCC	TREATMENT BLDG 30KVA XFMR-1	–	THWN	600	3,1	–	P,G	–
14	–	TREATMENT BLDG 30KVA XFMR-1	TREATMENT BUILDING PP-1	–	THWN	600	3,1,1	–	P,N,G	–
15	–	TREATMENT BUILDING MCC	AIR STRIPPER AS-1	–	THWN	600	3,1	–	P,G	–
16	–	–	–	–	–	–	–	–	–	–
17	–	TREATMENT BUILDING MCC	AIR STRIPPER AS-2	–	THWN	600	3,1	–	P,G	–
18	–	–	–	–	–	–	–	–	–	–
19	–	PB-RW-21	RW-21 VFD/CONTROL PANEL	–	–	600	3,1	–	P,G	–
20	–	RW-21 VFD/CONTROL PANEL	SUB PUMP RW-21	–	–	600	3,1	–	P,G	–
21	–	PB-RW-21	MPZ-RW-21 (10KVA XFMR & PNL)	–	–	600	2,1	–	P,G	–
22	–	PB-RW-21	RW-21 SPD	–	–	600	3,1	–	P,G	–
23	–	PB-RW-20	RW-20 VFD/CONTROL PANEL	–	–	600	3,1	–	P,G	–
24	–	RW-20 VFD/CONTROL PANEL	SUB PUMP RW-20	–	–	600	3,1	–	P,G	–
25	–	PB-RW-20	MPZ-RW-20 (10KVA XFMR & PNL)	–	–	600	2,1	–	P,G	–
26	–	PB-RW-20	RW-20 SPD	–	–	600	3,1	–	P,G	–

PANEL LP-RW-20)			SERVICE			MAINS		
TYPE	NEMA 4X		VOLTAGE	PHASES	WIRE	AMP RATING	LOCATION	TYPE
MTG.	SURFACE		120/240	1	3	60A		CKT BKR
BRANCH CIRCUIT			VOLT-AMPS			LOAD DESCRIPTION		
NO.	POLE	SIZE	PHASE A	PHASE B				
1	1	20A	–			VAULT LIGHTING		
3	1	20A		–		SPARE		
5	1	20A	–			SPARE		
7	2	–		–		SPACE		
9			–					
2	1	20A		–		GFCI RECEPTACLE		
4	1	20A	–			CONTROL POWER		
6	1	–		–		SPACE		
8	1	–	–			SPACE		
10	1	–		–		SPACE		
TOTAL PHASE VA			–	–				
PANEL TOTAL VA			–			AVE PANEL AMP @ 240V		–
PANEL MAX PH VA			–			MAX PANEL AMP @ 240V		–
*** –								
–								
–								
–								

PANEL LP-RW-21)			SERVICE			MAINS		
TYPE	NEMA 4X		VOLTAGE	PHASES	WIRE	AMP RATING	LOCATION	TYPE
MTG.	SURFACE		120/240	1	3	60A		CKT BKR
BRANCH CIRCUIT			VOLT-AMPS			LOAD DESCRIPTION		
NO.	POLE	SIZE	PHASE A	PHASE B				
1	1	20A	–			VAULT LIGHTING		
3	1	20A		–		SPARE		
5	1	20A	–			SPARE		
7	2	–		–		SPACE		
9			–					
2	1	20A		–		GFCI RECEPTACLE		
4	1	20A	–			CONTROL POWER		
6	1	–		–		SPACE		
8	1	–	–			SPACE		
10	1	–		–		SPACE		
TOTAL PHASE VA			–	–				
PANEL TOTAL VA			–			AVE PANEL AMP @ 240V		–
PANEL MAX PH VA			–			MAX PANEL AMP @ 240V		–
*** –								
–								
–								
–								

PANEL LP-RW-22)			SERVICE			MAINS		
TYPE	NEMA 4X		VOLTAGE	PHASES	WIRE	AMP RATING	LOCATION	TYPE
MTG.	SURFACE		120/240	1	3	60A		CKT BKR
BRANCH CIRCUIT			VOLT-AMPS			LOAD DESCRIPTION		
NO.	POLE	SIZE	PHASE A	PHASE B				
1	1	20A	–			VAULT LIGHTING		
3	1	20A		–		SPARE		
5	1	20A	–			SPARE		
7	2	–		–		SPACE		
9			–					
2	1	20A		–		GFCI RECEPTACLE		
4	1	20A	–			CONTROL POWER		
6	1	–		–		SPACE		
8	1	–	–			SPACE		
10	1	–		–		SPACE		
TOTAL PHASE VA			–	–				
PANEL TOTAL VA			–			AVE PANEL AMP @ 240V		–
PANEL MAX PH VA			–			MAX PANEL AMP @ 240V		–
*** –								
–								
–								
–								

CABLE USE LEGEND

P = POWER
N = NEUTRAL
G = GROUND
COMM = COMMUNICATION
S = SPARES
C = CONTROL
I = INSTRUMENTATION
T = TELEPHONE

DRAFT

DRAWING NOT TO SCALE
SCALE(S) AS INDICATED

THIS BAR REPRESENTS ONE INCH ON THE ORIGINAL DRAWING:

USE TO VERIFY FIGURE REPRODUCTION SCALE

No.	Date	Revisions	By	Ckd

THIS DRAWING IS THE PROPERTY OF THE ARCADIS ENTITY IDENTIFIED IN THE TITLE BLOCK AND MAY NOT BE REUSED OR ALTERED IN WHOLE OR IN PART WITHOUT THE EXPRESS WRITTEN PERMISSION OF SAME

Professional Engineer's Name
Professional Engineer's No.
State | Date Signed | Project Mgr.
Designed by | Drawn by | Checked by

ARCADIS Design & Consultancy for natural and built assets
ARCADIS OF NEW YORK, INC.

NO ALTERATIONS PERMITTED HEREON EXCEPT AS PROVIDED UNDER SECTION 7209 SUBDIVISION 2 OF THE NEW YORK STATE EDUCATION LAW

NORTHROP GRUMMAN SYSTEMS CORPORATION • OPERABLE UNIT 3 • BETHPAGE, NEW YORK
AREA 21 - 60% REMEDIAL DESIGN

PANEL SCHEDULE AND CONDUIT SCHEDULE

ELECTRICAL

ARCADIS Project No.
NY001496.2415.R33E3

Date
JUNE 2016

ARCADIS
2 HUNTINGTON QUADRANGLE
SUITE 1S10
MELVILLE, NEW YORK
TEL. 631.249.7600

E-7

CITY: ---- DIV/GROUP: ---- DB: LD PIC: PM: TM: LYR:ON=*;OFF=*REF* ACADVER: 19.1S (LMS TECH) PAGESETUP: ---- PLOTSTYLETABLE: ---- PLOTTED: 8/26/2016 1:46 PM BY: CARDENAS, RAUL
C:\Users\rcardenas\Documents\Projects\Enviro\GM-38 Area\Northrop Grumman RW-21\Elec\Dwgs\Working\Dwgs\1496R33E3E01.dwg LAYOUT: E-7 SAVED: 8/26/2016 1:44 PM
XREFS: X6BDR-C-LD Va lt Layo ts 1496R33E3M01 XR33E302 XR33E3-GISinfo XProConvayLinesR3 XRW-21E tUIU date08-05-16 IMAGES: PROJECTNAME: ----

CITY: DIV/GROUP: DB: LD: PIC: PM: TM: LYR:ON=*;OFF=*REF*
C:\Users\rcardenas\Documents\Projects\Enviro\GM-38 Area\Northrop Grumman RW-21\ElecDwgs\WorkingDwgs\1496R31E3E01.dwg LAYOUT: E-8 SAVED: 8/26/2016 1:44 PM ACADVER: 19.1S (LMS TECH) PAGESETUP: ---- PLOTSTYLETABLE: ---- PLOTTED: 8/26/2016 1:49 PM BY: CARDENAS, RAUL

XREFS: IMAGES: PROJECTNAME: ----
XrBDR-C-LD
Va lt Layo ts
1496R33E3M01
XrR33E302
XrR33E3-GISinfo
XrProConvayLinesR3
XrRW-21E tUIU date08-05-16

DRAWING TO BE PROVIDED WITH 95% DESIGN SUBMITTAL

DRAFT

DRAWING NOT TO SCALE
SCALE(S) AS INDICATED

THIS BAR REPRESENTS ONE INCH ON THE ORIGINAL DRAWING: USE TO VERIFY FIGURE REPRODUCTION SCALE

No.	Date	Revisions	By	Ckd

THIS DRAWING IS THE PROPERTY OF THE ARCADIS ENTITY IDENTIFIED IN THE TITLE BLOCK AND MAY NOT BE REUSED OR ALTERED IN WHOLE OR IN PART WITHOUT THE EXPRESS WRITTEN PERMISSION OF SAME

Professional Engineer's Name
Professional Engineer's No.
State | Date Signed | Project Mgr.
Designed by | Drawn by | Checked by

ARCADIS Design & Consultancy for natural and built assets
ARCADIS OF NEW YORK, INC.

NO ALTERATIONS PERMITTED HEREON EXCEPT AS PROVIDED UNDER SECTION 7209 SUBDIVISION 2 OF THE NEW YORK STATE EDUCATION LAW

NORTHROP GRUMMAN SYSTEMS CORPORATION ● OPERABLE UNIT 3 ● BETHPAGE, NEW YORK
AREA 21 - 60% REMEDIAL DESIGN

ELECTRICAL DETAILS

ELECTRICAL

ARCADIS Project No.
NY001496.2415.R33E3

Date
JUNE 2016

ARCADIS
2 HUNTINGTON QUADRANGLE
SUITE 1S10
MELVILLE, NEW YORK
TEL. 631.249.7600

E-8

CITY: DIV/GROUP: DB: LD: PIC: PM: TM: LYR:ON=*;OFF=*REF*
C:\Users\rcardenas\Documents\Projects\Enviro\GM-38 Area\Northrop Grumman RW-21\ElecDwgs\WorkingDwgs\1496R31E3E01.dwg LAYOUT: E-9 SAVED: 8/26/2016 1:50 PM ACADVER: 19.1S (LMS TECH) PAGESETUP: ---- PLOTSTYLETABLE: ---- PLOTTED: 8/26/2016 1:51 PM BY: CARDENAS, RAUL

XREFS: IMAGES: PROJECTNAME: ----
XrBDR-C-LD
Va lt Layo ts
1496R33E3M01
XrR33E302
XrR33E3-GISinfo
XrProConvayLinesR3
XrRW-21E 1UIU date08-05-16

DRAWING TO BE PROVIDED WITH 95% DESIGN SUBMITTAL

DRAFT

DRAWING NOT TO SCALE
SCALE(S) AS INDICATED

THIS BAR REPRESENTS ONE INCH ON THE ORIGINAL DRAWING: USE TO VERIFY FIGURE REPRODUCTION SCALE

No.	Date	Revisions	By	Ckd

THIS DRAWING IS THE PROPERTY OF THE ARCADIS ENTITY IDENTIFIED IN THE TITLE BLOCK AND MAY NOT BE REUSED OR ALTERED IN WHOLE OR IN PART WITHOUT THE EXPRESS WRITTEN PERMISSION OF SAME

Professional Engineer's Name
Professional Engineer's No.
State | Date Signed | Project Mgr.
Designed by | Drawn by | Checked by

ARCADIS Design & Consultancy for natural and built assets
ARCADIS OF NEW YORK, INC.

NO ALTERATIONS PERMITTED HEREON EXCEPT AS PROVIDED UNDER SECTION 7209 SUBDIVISION 2 OF THE NEW YORK STATE EDUCATION LAW

NORTHROP GRUMMAN SYSTEMS CORPORATION ● OPERABLE UNIT 3 ● BETHPAGE, NEW YORK
AREA 21 - 60% REMEDIAL DESIGN

MCC ELEVATION

ELECTRICAL

ARCADIS Project No.
NY001496.2415.R33E3

Date
JUNE 2016

ARCADIS
2 HUNTINGTON QUADRANGLE
SUITE 1S10
MELVILLE, NEW YORK
TEL. 631.249.7600

E-9

DRAWING TO BE PROVIDED WITH 95% DESIGN SUBMITTAL

CITY:CRANBURY-NJ DIV/GROUP:ENVCAD DB:A.SANCHEZ, T.FATTO LD: PIC: PM: C.SANGIOVANNI TM: LYR:ON=*;OFF=*REF*
C:\ENVCAD\CRANBURY\ACT\NY001496\2415\R33E3\DWG\NY001496D10.dwg LAYOUT: M-1 SAVED: 8/26/2016 2:44 PM ACADVER: 19.1S (LMS TECH) PAGESETUP: CTB-DWF-LD PLOTSTYLETABLE: PLTCONT.CTB PLOTTED: 8/26/2016 2:45 PM BY: FATTO, TRACEY

THIS BAR REPRESENTS ONE INCH ON THE ORIGINAL DRAWING:

USE TO VERIFY FIGURE REPRODUCTION SCALE

No.	Date	Revisions	By	Ckd

THIS DRAWING IS THE PROPERTY OF THE ARCADIS ENTITY IDENTIFIED IN THE TITLE BLOCK AND MAY NOT BE REUSED OR ALTERED IN WHOLE OR IN PART WITHOUT THE EXPRESS WRITTEN PERMISSION OF SAME.

Professional Engineer's Name

Professional Engineer's No.

State	Date Signed	Project Mgr.
Designed by	Drawn by	Checked by

ARCADIS Design & Consultancy for natural and built assets

ARCADIS OF NEW YORK, INC.

NO ALTERATIONS PERMITTED HEREON EXCEPT AS PROVIDED UNDER SECTION 7209 SUBDIVISION 2 OF THE NEW YORK STATE EDUCATION LAW

NORTHROP GRUMMAN SYSTEMS CORPORATION ● OPERABLE UNIT 3 ● BETHPAGE, NEW YORK

RW-21 AREA - 60% REMEDIAL DESIGN

MECHANICAL LEGEND AND ABBREVIATIONS

ARCADIS Project No.
NY001496.2415.R33E3

Date
AUGUST 2016

ARCADIS
2 HUNTINGTON QUADRANGLE
SUITE 1S10
MELVILLE, NEW YORK
Tel: 631.249.7600

M-1

DRAWING TO BE PROVIDED WITH 95% DESIGN SUBMITTAL

CITY:CRANBURY-NJ DIV/GROUP:ENVCAD DB:A.SANCHEZ, T.FATTO LD: PIC: PM: C.SANGIOVANNI TM: LYR:ON=*;OFF=*REF*
C:\ENVCAD\CRANBURY\ACTNY001496\2415\R33E3\DWG\NY001496D10.dwg LAYOUT: M-2 SAVED: 8/26/2016 2:44 PM ACADVER: 19.1S (LMS TECH) PAGESETUP: CTB-DWF-LD PLOTSTYLETABLE: PLTCONT.CTB PLOTTED: 8/26/2016 2:44 PM BY: FATTO, TRACEY

THIS BAR REPRESENTS ONE INCH ON THE ORIGINAL DRAWING:

USE TO VERIFY FIGURE REPRODUCTION SCALE

No.	Date	Revisions	By	Ckd

THIS DRAWING IS THE PROPERTY OF THE ARCADIS ENTITY IDENTIFIED IN THE TITLE BLOCK AND MAY NOT BE REUSED OR ALTERED IN WHOLE OR IN PART WITHOUT THE EXPRESS WRITTEN PERMISSION OF SAME.

Professional Engineer's Name

Professional Engineer's No.

State	Date Signed	Project Mgr.
Designed by	Drawn by	Checked by

ARCADIS Design & Consultancy for natural and built assets

ARCADIS OF NEW YORK, INC.

NO ALTERATIONS PERMITTED HEREON EXCEPT AS PROVIDED UNDER SECTION 7209 SUBDIVISION 2 OF THE NEW YORK STATE EDUCATION LAW

NORTHROP GRUMMAN SYSTEMS CORPORATION ● OPERABLE UNIT 3 ● BETHPAGE, NEW YORK

RW-21 AREA - 60% REMEDIAL DESIGN

MECHANICAL DETAILS

ARCADIS Project No.
NY001496.2415.R33E3

Date
AUGUST 2016

ARCADIS
2 HUNTINGTON QUADRANGLE
SUITE 1S10
MELVILLE, NEW YORK
Tel: 631.249.7600

M-2

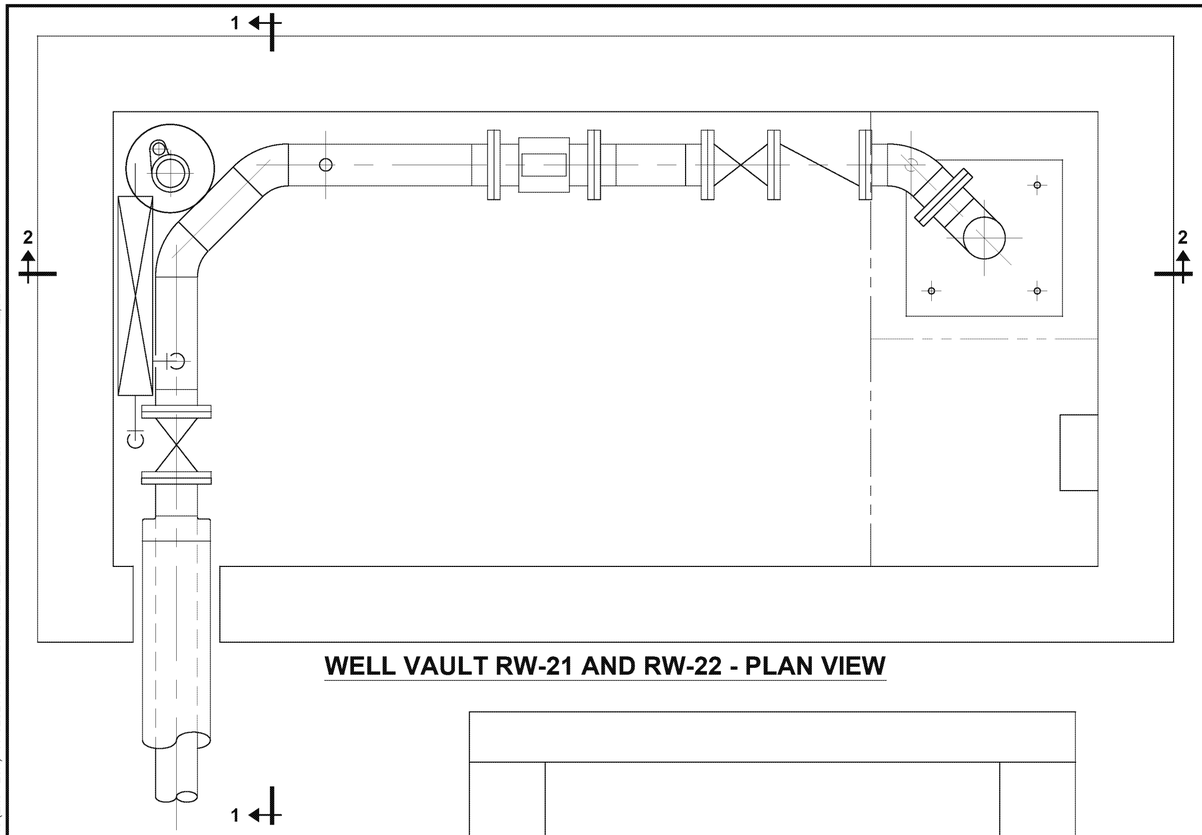

WELL VAULT RW-21 AND RW-22 - PLAN VIEW

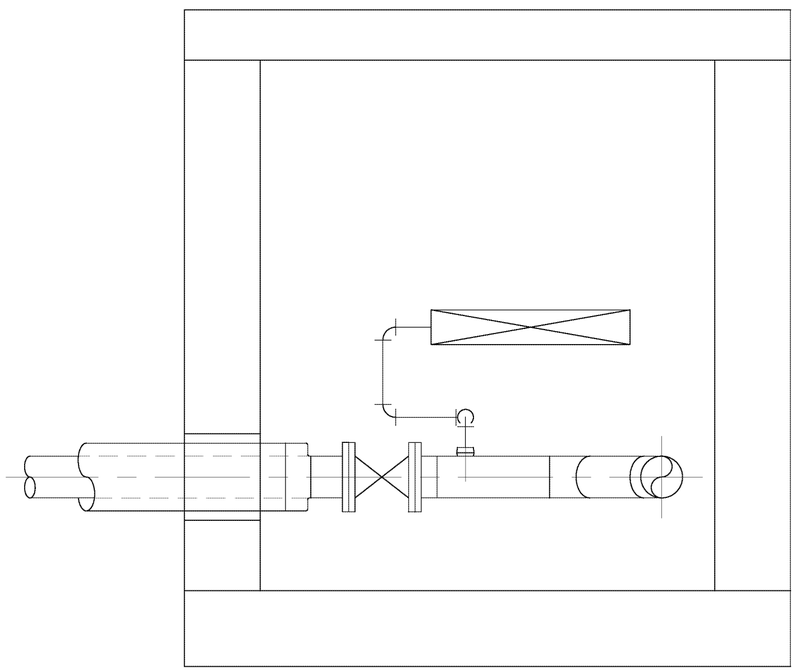

WELL VAULT - SECTION VIEW 1

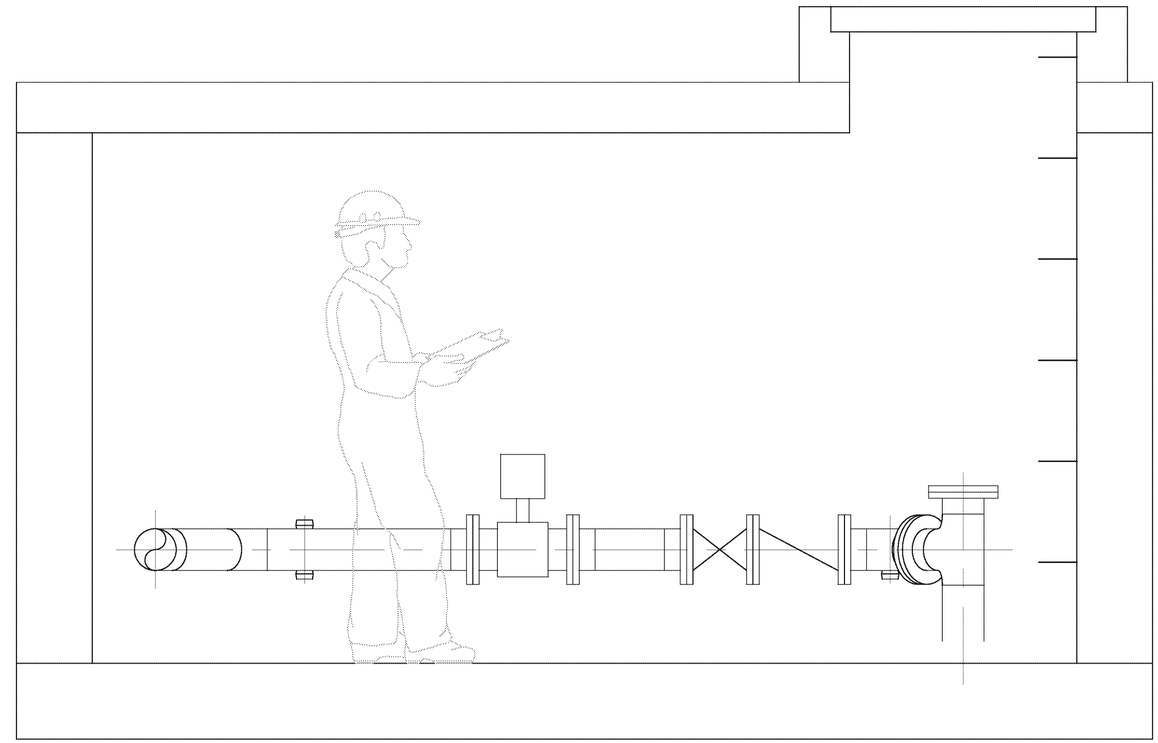

WELL VAULT - SECTION VIEW 2

CITY: DIV/GROUP: DB: LD: PIC: PM: TM: LYR:ON=*;OFF=*REF*
C:\Local-G\ENVCAD\SYRACUSE\ACT\NY001496\2415\R33E3\1496R33E3M01.dwg LAYOUT: M-3 SAVED: 8/17/2016 10:16 AM ACADVER: 19.1S (LMS TECH) PAGESETUP: ---- PLOTSTYLETABLE: ---- PLOTTED: 8/22/2016 5:41 PM BY: SANCHEZ, ADRIAN
XREFS: IMAGES: PROJECTNAME: ----
XrBDR-C-LD

0 1' 2'
APPROXIMATE SCALE IN FEET

THIS BAR REPRESENTS ONE INCH ON THE ORIGINAL DRAWING: USE TO VERIFY FIGURE REPRODUCTION SCALE

No.	Date	Revisions	By	Ckd
	08.2016	60% DESIGN SUBMITTAL - ISSUED FOR BID		

THIS DRAWING IS THE PROPERTY OF THE ARCADIS ENTITY IDENTIFIED IN THE TITLE BLOCK AND MAY NOT BE REUSED OR ALTERED IN WHOLE OR IN PART WITHOUT THE EXPRESS WRITTEN PERMISSION OF SAME.

Professional Engineer's Name
Professional Engineer's No.
State | Date Signed | Project Mgr.
Designed by | Drawn by A.SANCHEZ | Checked by

ARCADIS Design & Consultancy for natural and built assets
ARCADIS OF NEW YORK, INC.

NO ALTERATIONS PERMITTED HEREON EXCEPT AS PROVIDED UNDER SECTION 7209 SUBDIVISION 2 OF THE NEW YORK STATE EDUCATION LAW

NORTHROP GRUMMAN SYSTEMS CORPORATION • OPERABLE UNIT 3 • BETHPAGE, NEW YORK
AREA 21 - 60% REMEDIAL DESIGN

WELL VAULT MECHANICAL PLAN AND SECTIONS

MECHANICAL

ARCADIS Project No.
NY001496.2415.R33E3

Date
AUGUST 2016

ARCADIS
2 HUNTINGTON QUADRANGLE
SUITE 1S10
MELVILLE, NEW YORK
TEL. 631.249.7600

M-3

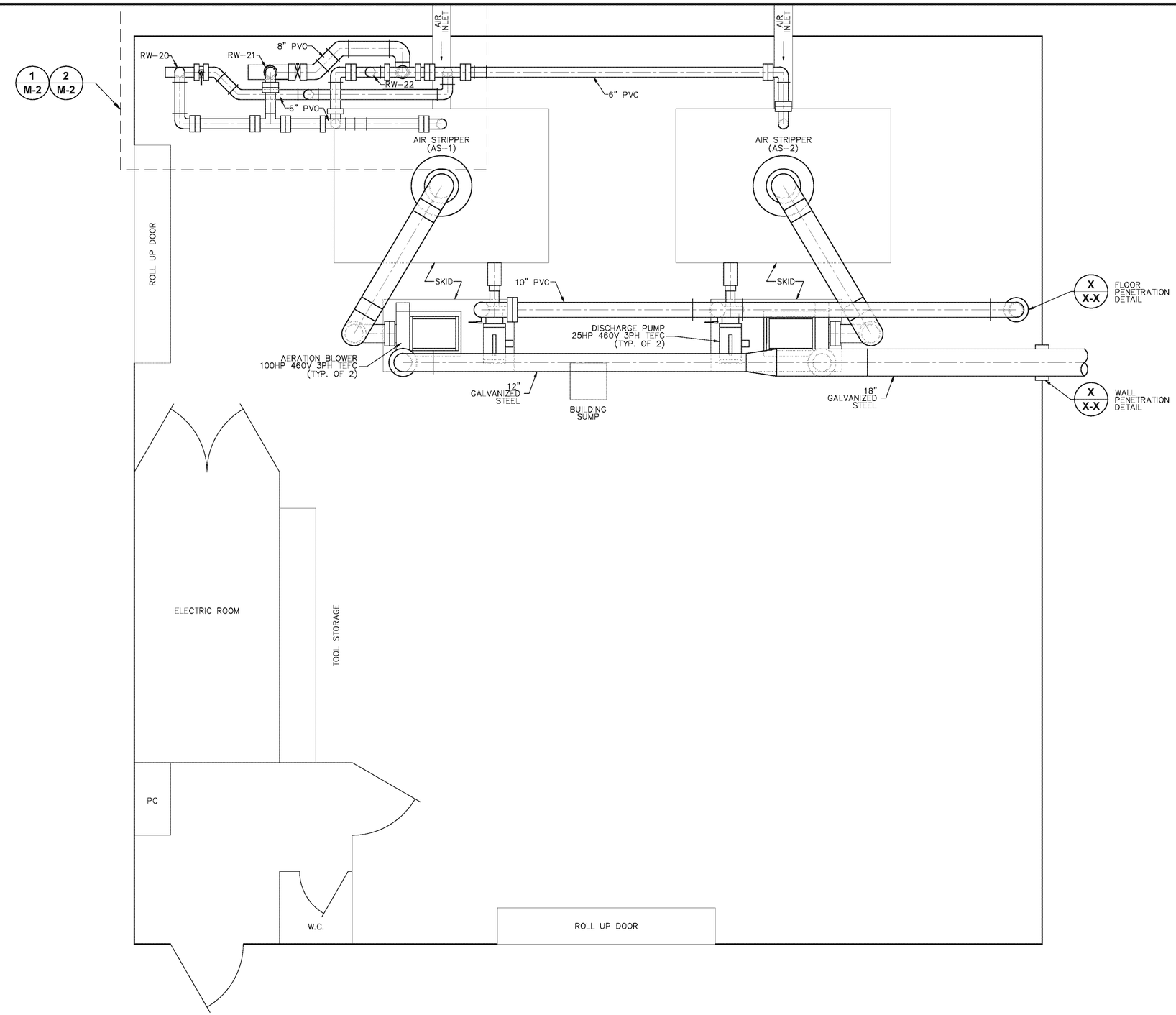

CITY:SYR-NY DIV/GROUP:ENV/141 DB:GHS K. SARTORI LD:GHS PIC: PM: TM: LYR:ON=*;OFF=*REF*
G:\ENVCAD\San Rafael\RETURN_TO\Syracuse-NY\NY001496\2415\R33E3\DWG\1496R33E3M01.dwg LAYOUT: M-1 SAVED: 8/26/2016 9:42 AM ACADVER: 19.1S (LMS TECH) PAGESETUP: ---- PLOTSTYLETABLE: ---- PLOTTED: 8/26/2016 10:13 AM BY: HARRIS, JESSICA
XREFS: IMAGES: PROJECTNAME: ----
Pages from 16T-01524 Approval Package R2.jpg

1"=3' 3' 0 3' 6'

THIS BAR REPRESENTS ONE INCH ON THE ORIGINAL DRAWING:

USE TO VERIFY FIGURE REPRODUCTION SCALE

No.	Date	Revisions	By	Ckd
	07.2016	CONCEPTUAL LAYOUT		

THIS DRAWING IS THE PROPERTY OF THE ARCADIS ENTITY IDENTIFIED IN THE TITLE BLOCK AND MAY NOT BE REUSED OR ALTERED IN WHOLE OR IN PART WITHOUT THE EXPRESS WRITTEN PERMISSION OF SAME.

Professional Engineer's Name

Professional Engineer's No.

State	Date Signed	Project Mgr.
Designed by	Drawn by A.SANCHEZ	Checked by

ARCADIS Design & Consultancy for natural and built assets

ARCADIS OF NEW YORK, INC.

NO ALTERATIONS PERMITTED HEREON EXCEPT AS PROVIDED UNDER SECTION 7209 SUBDIVISION 2 OF THE NEW YORK STATE EDUCATION LAW

NORTHROP GRUMMAN SYSTEMS CORPORATION • OPERABLE UNIT 3 • BETHPAGE, NEW YORK

RW-21 PROJECT AREA - 60% REMEDIAL DESIGN

TREATMENT BUILDING MECHANICAL PLAN AND EQUIPMENT LIST

ARCADIS Project No. NY001496.2415.R33E3

Date AUGUST 2016

ARCADIS
2 HUNTINGTON QUADRANGLE
SUITE 1S10
MELVILLE, NEW YORK
TEL. 631.249.7600

M-4

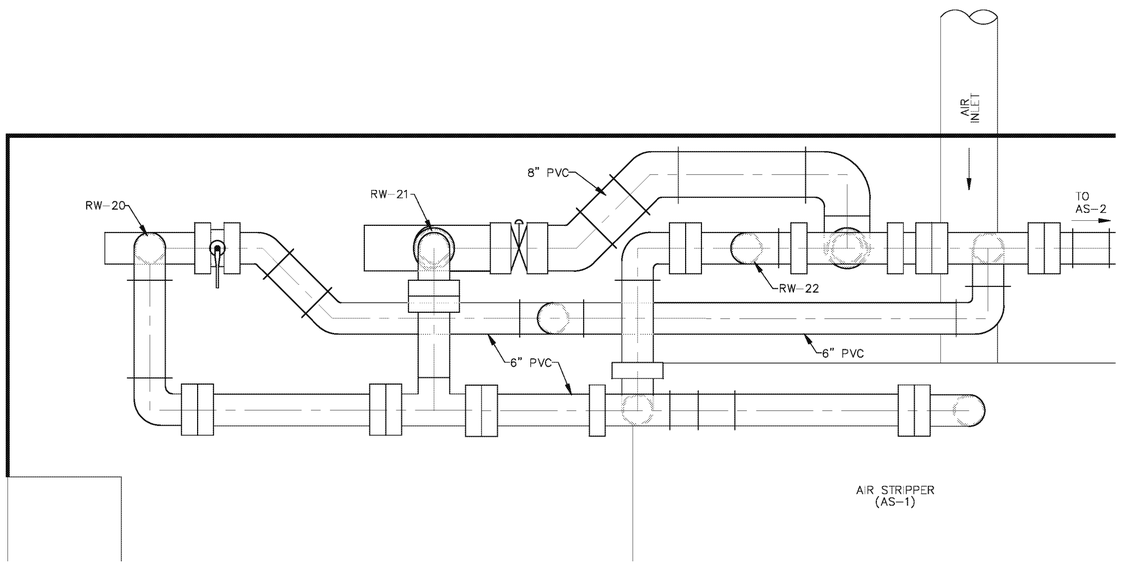

INFLUENT PIPE PLAN VIEW DETAILS

1 / M-2

0 1' 2'
SCALE: 3/4"=1'-0"

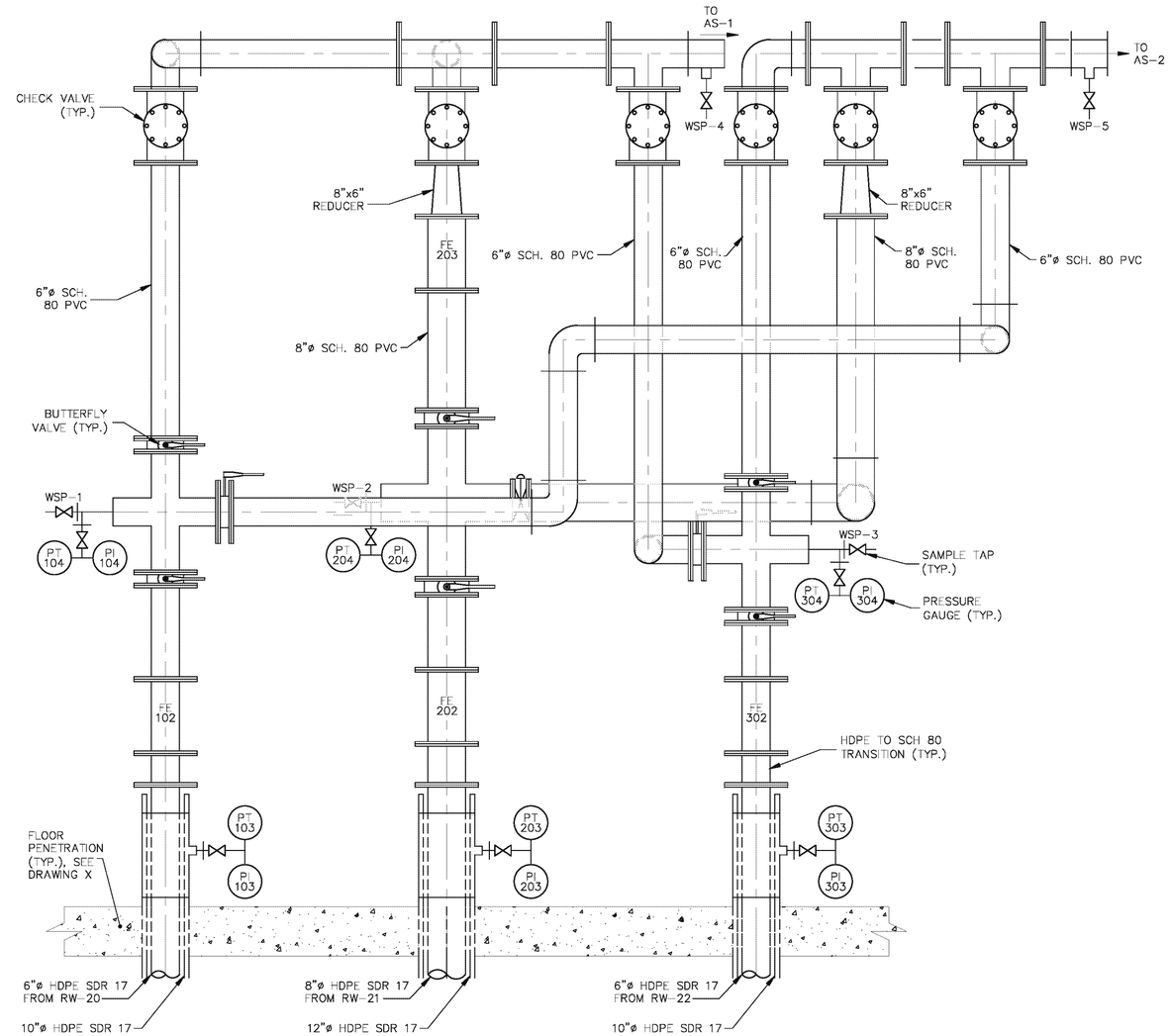

INFLUENT PIPE ELEVATION VIEW DETAILS

2 / M-2

0 1' 2'
SCALE: 3/4"=1'-0"

CITY:SYR-NY DIV:GROUP:ENV/141 DB:GHS K. SARTORI LD:GHS PIC: PM: TM: LYR:ON=*;OFF=*REF*
C:\Users\jlharris\Desktop\ENVCAD\RETURN-TO\SYRACUSE, NY\NY001496\2415\R33E3\DWG\1496R33E3M01.dwg LAYOUT: M-2 SAVED: 8/17/2016 12:32 PM ACADVER: 19.1S (LMS TECH) PAGESETUP: ---- PLOTSTYLETABLE: ---- PLOTTED: 8/17/2016 12:36 PM BY: HARRIS, JESSICA
XREFS: IMAGES: PROJECTNAME: ----

SCALE(S) AS INDICATED

THIS BAR REPRESENTS ONE INCH ON THE ORIGINAL DRAWING: USE TO VERIFY FIGURE REPRODUCTION SCALE

No.	Date	Revisions	By	Ckd
	07.2016	CONCEPTUAL LAYOUT		

THIS DRAWING IS THE PROPERTY OF THE ARCADIS ENTITY IDENTIFIED IN THE TITLE BLOCK AND MAY NOT BE REUSED OR ALTERED IN WHOLE OR IN PART WITHOUT THE EXPRESS WRITTEN PERMISSION OF SAME.

Professional Engineer's Name
Professional Engineer's No.
State | Date Signed | Project Mgr.
Designed by | Drawn by A.SANCHEZ | Checked by

ARCADIS Design & Consultancy for natural and built assets
ARCADIS OF NEW YORK, INC.
NO ALTERATIONS PERMITTED HEREON EXCEPT AS PROVIDED UNDER SECTION 7209 SUBDIVISION 2 OF THE NEW YORK STATE EDUCATION LAW

NORTHROP GRUMMAN SYSTEMS CORPORATION • OPERABLE UNIT 3 • BETHPAGE, NEW YORK
RW-21 PROJECT AREA - 60% REMEDIAL DESIGN

TREATMENT BUILDING MECHANICAL SECTIONS

ARCADIS Project No. NY001496.2415.R33E3
Date AUGUST 2016
ARCADIS
2 HUNTINGTON QUADRANGLE
SUITE 1S10
MELVILLE, NEW YORK
TEL. 631.249.7600

M-5

DRAWING TO BE PROVIDED WITH 95% DESIGN SUBMITTAL

CITY:CRANBURY-NJ DIV/GROUP:ENVCAD DB:A.SANCHEZ, T.FATTO LD: PIC: PM: C.SANGIOVANNI TM: LYR:ON=*;OFF=*REF*
C:\ENVCAD\CRANBURY\ACT\NY001496\2415\R33E3\DWG\NY001496D10.dwg LAYOUT: M-6 SAVED: 8/26/2016 2:44 PM ACADVER: 19.1S (LMS TECH) PAGESETUP: CTB-DWF-LD PLOTSTYLETABLE: PLTCONT.CTB PLOTTED: 8/26/2016 2:44 PM BY: FATTO, TRACEY

THIS BAR REPRESENTS ONE INCH ON THE ORIGINAL DRAWING:

USE TO VERIFY FIGURE REPRODUCTION SCALE

No.	Date	Revisions	By	Ckd

THIS DRAWING IS THE PROPERTY OF THE ARCADIS ENTITY IDENTIFIED IN THE TITLE BLOCK AND MAY NOT BE REUSED OR ALTERED IN WHOLE OR IN PART WITHOUT THE EXPRESS WRITTEN PERMISSION OF SAME.

Professional Engineer's Name

Professional Engineer's No.

State	Date Signed	Project Mgr.
Designed by	Drawn by	Checked by

ARCADIS Design & Consultancy for natural and built assets

ARCADIS OF NEW YORK, INC.

NO ALTERATIONS PERMITTED HEREON EXCEPT AS PROVIDED UNDER SECTION 7209 SUBDIVISION 2 OF THE NEW YORK STATE EDUCATION LAW

NORTHROP GRUMMAN SYSTEMS CORPORATION ● OPERABLE UNIT 3 ● BETHPAGE, NEW YORK

RW-21 AREA - 60% REMEDIAL DESIGN

TREATMENT BUILDING MECHANICAL DETAILS

ARCADIS Project No.
NY001496.2415.R33E3

Date
AUGUST 2016

ARCADIS
2 HUNTINGTON QUADRANGLE
SUITE 1S10
MELVILLE, NEW YORK
Tel: 631.249.7600

M-6

Table of Contents

RW-21 Area Remedial Design Specifications

DIVISION 1 - GENERAL REQUIREMENTS

Section 01010 SUMMARY OF WORK

Section 01035 HEALTH AND SAFETY REQUIREMENTS

Section 01046 CONTROL OF WORK

Section 01110 ENVIRONMENTAL PROTECTION PROCEDURES

Section 01140 WORK RESTRICTIONS

Section 01170 SPECIAL PROVISIONS

Section 01300 SUBMITTALS

Section 01350 ADMINISTRATIVE REQUIREMENTS

Section 01400 QUALITY REQUIREMENTS

Section 01500 TEMPORARY FACILITIES AND CONTROLS

Section 01600 PRODUCT REQUIREMENTS

Section 01700 CONTRACT CLOSEOUT

Section 01701 EQUIPMENT AND SYSTEM START-UP AND TESTING

Section 01720 OPERATIONS AND MAINTENANCE DATA

Section 01730 PROTECTING INSTALLED CONSTRUCTION

Section 01732 CUTTING AND PATCHING

Section 01735 EXECUTION

Section 01736 SELECTIVE DEMOLITION

Section 01740 CLEANING

Section 01750 GUARANTEES AND WARRANTIES

DIVISION 2 – SITE WORK

Section 02200 EARTHWORK

Section 02232 GRANULAR MATERIALS

Section 02250 MANAGEMENT, TRANSPORTATION AND DISPOSAL OF MATERIALS

Section 02290 EROSION AND SEDIMENT CONTROL

Section 02511 ASPHALT PAVING

Section 02901 MISCELLANEOUS WORK AND SITE CLEANUP

Section 02936 ESTABLISHMENT OF VEGETATION

DIVISION 3 – CONCRETE

Section 03301 CAST-IN-PLACE CONCRETE

DIVISION 5 – METALS

Section 05501 ANCHOR BOLTS AND ANCHORS

Section 05531 METAL GRATINGS

DIVISION 7 – THERMAL AND MOISTURE PROTECTION

Section 07920 JOINT SEALANTS

DIVISION 9 – FINISHES

Section 09900 PAINTING

DIVISION 10 – SPECIALTIES

Section 10210 LOUVERS

Section 10522 FIRE EXTINGUISHERS

DIVISION 13 – SPECIAL CONSTRUCTION

Section 13122 PRE-FABRICATED BUILDINGS

DIVISION 15 – MECHANICAL

Section 15050 BASIC MATERIAL AND METHODS

Section 15051 BASIC PIPING MATERIALS AND METHODS

Section 15052 BASIC HVAC MATERIALS AND METHODS

Section 15060 PROCESS PIPING HANGERS AND SUPPORTS

Section 15070 HIGH DENSITY POLYETHYLENE PIPE

Section 15075 MECHANICAL IDENTIFICATION

Section 15080 MECHANICAL PROCESS PIPING INSULATION

Section 15110 MECHANICAL PROCESS VALVES

Section 15200 PROCESS PIPE

Section 15950 TESTING, ADJUSTING, AND BALANCING

DIVISION 16 – ELECTRICAL REQUIREMENTS

Section 16050 GENERAL PROVISIONS FOR ELECTRICAL SYSTEMS

Section 16070 HANGERS AND SUPPORTS FOR ELECTRICAL SYSTEMS

Section 16075 ELECTRICAL IDENTIFICATION

Section 16121 INSTRUMENTATION AND COMMUNICATION CABLE

Section 16122 LOW-VOLTAGE ELECTRICAL POWER CONDUCTORS AND CABLES

Section 16131 RIGID AND FLEXIBLE CONDUITS

Section 16135 PULL JUNCTION AND TERMINAL BOXES

Section 16138 HANDHOLES FOR ELECTRICAL SYSTEMS

Section 16143 DISCONNECT SWITCHES

Section 16161 SURGE PROTECTION DEVICES

Section 16271 DRY TYPE TRANSFORMERS

Section 16423 MOTOR CONTROL CENTERS

Section 16425 LOW VOLTAGE VARIABLE FREQUENCY DRIVES

Section 16440 PANELBOARDS

Section 16501 LIGHTING

DIVISION 1

DIVISION 1 – GENERAL REQUIREMENTS

SECTION 01010

SUMMARY OF WORK

PART 1 GENERAL

1.1 DEFINITIONS

A. Whenever the following terms are used in these Specifications, it is understood that they represent the following:

1. OWNER:
   Northrop Grumman Systems Corporation
   Aerospace Systems/BM&ESD
   925 South Oyster Bay Road
   M/S X01-14
   Bethpage, NY 11714-3582

2. ENGINEER:
   The Arcadis ENGINEER, who is acting as the representative of the OWNER for this work.

3. CONTRACTOR:
   The individual, firm, partnership, or corporation that is awarded the work and is designated as the CONTRACTOR in these Contract Documents.

4. SITE:
   The majority of the Work will be performed on the Town of Oyster Bay (Town) property, in particular on the parking field B-2, on a "green belt" west of Route 135 and bordered by Central Avenue to the north and an access road to the south, on the aforementioned access road east of Route 135, bordered by Broadway to the west, and on Town roads and rights-of-way on Seaman Avenue, William Street and Broadway. The remaining work will be performed on a County road and rights-of-way on Central Avenue. The Drawings provide a Site Plan showing all work locations and defining the Site.

1.2 SITE CONDITIONS

A. GENERAL

There will be no payment for any extras as a consequence of the CONTRACTOR's misunderstanding the descriptions contained in the Contract, Specifications and Drawings. The CONTRACTOR shall inspect the site and request answers to all questions that relate to the Work, its execution, and other details prior to submitting a Bid.

B. SITE ACCESS AND WORK AREAS

The Drawings, as referenced in these Specifications, depict the location of the site and describe the

types of access roads that lead to the site. It is the CONTRACTOR's sole responsibility to use and maintain present access at the Site. Any access roadways, marshalling yards, storage areas, work areas or other areas that the CONTRACTOR must use are the CONTRACTOR's sole responsibility to keep passable at its cost. The CONTRACTOR shall understand that certain access roadways must be used to maintain access to work areas; the CONTRACTOR shall cooperate with others in the making and maintenance of these common access roadways.

C. NIGHT AND SUNDAY WORK

Unless otherwise especially permitted, no work shall be done between the hours of 5:00 p.m. and 7:00 a.m., or on Saturday and Sunday, unless approved by the OWNER and Town. If it shall become necessary to perform work at night or on Saturday or Sunday, the OWNER and ENGINEER shall be informed at least seven (7) days in advance of the beginning of the performance of such work and it will only be performed if all applicable permits and approvals can be obtained. Only such work shall be done at night as can be done satisfactorily and in a safe manner. Proper lighting and all other necessary facilities for carrying out and inspecting the work shall be provided and maintained by the CONTRACTOR at all points where such work is being done.

1.3 DESCRIPTION OF WORK

A. This Scope of Work includes:

1. Trenching and installing piping from pipe stubs to the treatment system area for remedial well RW-20 and RW-21, and from the well vaults to the treatment system area for remedial well RW-22.
2. Installing process equipment within the well vaults, including all piping, valves, fittings, insulation, structural supports, and electrical equipment.
3. Installing remedial well pumps and motors within the remedial well casings, including piping and appurtenances.
4. Installing electric equipment from Pole 12 to the treatment system area, including transformer, conduit, and wire.
5. Trenching and installing potable water piping from supply to the treatment system area.
6. Installing a concrete foundation, including frost walls and footings, for the treatment system.
7. Installing two granular activated carbon (GAC) units, including concrete foundation.
8. Installing process equipment on the treatment building foundation, including two air strippers and motor control center (MCC).
9. Constructing a treatment system building, including all necessary structural supports and associated appurtenances.
10. Installing process equipment in the treatment building, including all piping, valves, fittings, and structural supports.
11. Installing process equipment from the treatment building to the GAC units, including all piping, valves, fittings, and structural supports.
12. Installing process equipment from the treatment building to the existing sewer main, including all piping, valves, fittings and structural supports.
13. Architectural installations in the treatment building for operator room and equipment room.
14. Installing control panel, communications system, and other control elements including instrumentation, conduit, and wiring, in the treatment buildings and well vaults.
15. Installing conveyance piping, expansion joints, heat trace, insulation, structural supports, and electrical wiring and conduit on the rooftop of the facility and across the service bridge.
16. Testing of equipment and controls.

1.4 SCOPE OF WORK

A. Work under this Contract Document includes the following list of items, which is meant as a guide to the Work required and is intended to provide a general description of the scope of the work, but is not to be taken as complete in all respects. Contractor shall provide the necessary labor, materials, equipment, tools, and appurtenances for the project, which are determined acceptable by the ENGINEER. Performance of Work shall comply with the respective codes, and all special instructions. The Work required is detailed in these Technical Specifications. In summary, the Work involves the following 25 major tasks:

1. **Mobilization, Site Preparation, Demobilization, Permits, and Temporary Controls:** Includes mobilization of equipment and materials for construction of the Work. Also includes construction of temporary facilities, as necessary, and Contractor Project Management and Coordination.
2. **General Conditions:** Includes all project management and administrative costs, which includes, but is not limited to: preparation of a preliminary construction schedule, schedule of submittals, and Schedule of Values; coordination of a pre-construction meeting; maintaining Record Documents during construction activities; maintenance of a Health and Safety program on Site, which includes daily tailgate meetings and issuance of hot work permits (as needed); and tests and inspections by ENGINEER, Navy, and Town of Oyster Bay.
3. **Installation of Groundwater Conveyance Piping to Treatment System Location:** Includes trenching, shoring from the pipe stubs to the treatment system for RW-20 and RW-21 and from the well vault to the treatment system for RW-21 and the installation and pressure testing of dual-walled SDR-17 HDPE. Pipe sizes are 6-inch carrier in 10-inch containment and 8-inch carrier in 12-inch containment, as shown on the Drawings. Piping and fittings shall be installed as shown on the Drawings. Following installation of the piping and fittings, the trench shall be backfilled and the excavation area shall be restored to pre-construction conditions.
4. **Installation of Water Main to Treatment System Location:** Includes trenching and shoring from the water main reduced pressure zone (RPZ) to the treatment building and the procurement, installation and pressure testing of water main piping. Pipe sizes are as shown on the Drawings. Piping and fittings shall be installed as shown on the Drawings. Following installation of the piping and fittings, the trench shall be backfilled and the excavation area shall be restored to pre-construction conditions.
5. **Install Underground Power Feeder from Transformer to Treatment System Electric Room:** Includes trenching main power feeder lines from the transformer to the Treatment System for termination in the Electric Room and procurement and installation of conduit and power wire. All necessary conduit and power wire shall be installed in the trench in accordance with the Drawings. Following installation of the conduit and power wire, the trench shall be backfilled and the excavation area shall be restored to pre-construction conditions.
6. **Install Underground Power Feeder from Treatment System Electrical Room to RW-22 Well Vault:** Includes trenching main power feeder lines from the Treatment System to the RW-22 well vault for termination in the well vault and procurement and installation of conduit and power wire. All necessary conduit and power wire shall be installed in the trench in accordance with the Drawings. Following installation of the conduit and power wire, the trench shall be backfilled and the excavation area shall be restored to pre-construction conditions.
7. **Well Vault Piping:** Includes procurement, installation, and pressure testing of Schedule 40 stainless steel piping, Schedule 80 stainless steel piping, valving, fittings and pipe supports. All necessary piping, valves, fittings, piping supports and bracing and appurtenances shall be shown on the Drawings.

8. **Instrumentation, Controls, and Communication:** Includes installation of flow, level, and pressure gauges, transmitters, antennae, and communications in the well vaults. All necessary supports and bracing shall be installed as shown on the Drawings.
9. **Electrical Installation (Well Vaults):** Includes installation of the electrical panels, electrical conduits and wiring for the well vaults. All necessary conduit, wiring, supports, and bracing and the panel locations and conduit route within the well vaults shall be installed as shown on the Drawings.
10. **Well Pump Installation:** Includes installation of submersible pump, submersible motor, 6-inch Schedule 40 stainless steel pipe, electric wire, Schedule 40 stainless steel well head, and appurtenances, as shown on the Drawings.
11. **Install Insulation on Piping:** Procure and install insulation on all piping located within the well vaults as described in these specifications and shown on the Drawings. All piping and fittings located in these areas shall be insulated.
12. **Construct Foundations for Treatment System and GAC Storage Area:** Includes installing two new foundations for the treatment system building and the GAC storage area. Treatment system building foundation will include frost walls and footings, while the GAC storage area will not include any frost walls or footings. Foundations shall be constructed as shown on the Drawings.
13. **Air Strippers:** Includes installation of two (2) QED 96.6 E-Z Tray skid-mounted air stripper units (AS-1, AS-2). Air stripper units include low-profile air strippers, blowers, transfers, control panels, and local piping.
14. **Electrical Installation (Treatment System Electrical Room):** Includes installation of the main breaker, motor control center (MCC), motor control panel (MCP), conduit and wiring for the treatment system electrical room. All necessary conduit, wiring, supports, and bracing and the conduit schedule shall be as shown on the Drawings.
15. **Treatment System Building:** Includes procurement installation of the treatment system building, rollup doors, access doors, gutters, and structural supports. All necessary panels, doors, gutters, and structural supports shall be as shown on the Drawings.
16. **Separation Walls:** Includes procurement, installation, and painting of separation walls for electrical room, operator room, and water closet. All necessary equipment shall be installed as shown on the Drawings.
17. **Water Closet:** Includes procurement and installation of toilet and sink in water closet.
18. **Treatment System Piping:** Includes procurement, installation, and pressure testing of Schedule 80 polyvinyl chloride (PVC) piping, valving, fittings, pipe supports and bracing. All necessary piping, valves, fittings, piping supports and bracing and appurtenances shall be as shown on the Drawings.
19. **Treatment System Duct Work:** Includes procurement, installation, and pressure testing of 10 Gauge galvanized steel ducting, valving, fittings, pipe supports and bracing. All necessary ducting, valves, fittings, piping supports and bracing and appurtenances shall be as shown on the Drawings.
20. **Wall Penetration Restoration:** Includes restoration of building walls to watertight conditions around exterior wall penetrations and restoration at piping and conduit penetrations through interior and exterior walls, including all work and materials necessary, including but not limited to metal flashing, Link-Seal, mastic, sealants, coatings, and adhesives.
21. **Vapor Carbon Vessels:** Includes installation of two (2) TetraSolv VB-20 vapor carbon vessels (GAC-1, GAC-2).
22. **Instrumentation, Controls, and Communication:** Includes procurement and installation of flow, level, temperature, and pressure gauges, transmitters, switches, antennae, and communications systems installed throughout the System. All necessary supports and bracing shall be installed as shown on the Drawings.
23. **HVAC:** Includes installation of electric unit heaters and supports and procurement and installation of louvers, ventilation fans, air conditioners, and supports. All

necessary ventilation fans, louvers, air conditioners and supports shall be as shown on the Drawings.

24. **Install Electrical Conduit:** Includes installation of the electrical conduits and wiring for areas outside of the electrical room. All necessary conduit, wiring, piping supports, and bracing and the conduit route shall be installed as shown on the Drawings.
25. **Control Panel:** Includes installation of the System control panel. Control wiring and conduit for all System instrumentation (including instrumentation installed in previous scopes of work) shall terminate at the control panel. System operational logic shall be provided by the Engineer.
26. **Site Restoration:** Includes Work required to restore the Site to Engineer's and Property Owner's satisfaction.
27. **Start-Up / Mechanical Shakedown:** Includes coordination of start-up for the System components, equipment and instrumentation. The contractor is responsible for coordinating start-up activities with equipment suppliers (as necessary) and Engineer and providing appropriate personnel on-site during all start-up, shakedown, and troubleshooting of equipment. The contractor shall document all start-up and mechanical shakedown activities.

B. List of Drawings:

Refer to the List of Drawings (Drawing G1), which is part of the Contract Documents.

1.6 QUALITY ASSURANCE

A. In accordance with Section 01400 - QUALITY REQUIREMENTS.

B. The CONTRACTOR warrants in presenting a Bid that all work will be performed to the highest standards. The CONTRACTOR further warrants that defects that are the result of the CONTRACTOR's methods or workmanship will be corrected, or removed and replaced at the CONTRACTOR's expense within one year after the completion and acceptance of the Work

1.7 COOPERATION

A. There may be other Engineers and/or Contractors, OWNER personnel and/or Regulators present at the site. The CONTRACTOR shall make every effort reasonably possible to cooperate with personnel. Any disputes shall be settled by and at the sole discretion of the OWNER.

1.8 CARE AND STORAGE OF MATERIALS

A. The CONTRACTOR shall unload, inspect, and store all equipment and material items delivered to job site for its work, including items supplied by the OWNER, the ENGINEER or furnished by others.

B. The CONTRACTOR will replace at its sole expense all OWNER, ENGINEER, furnished by others, and/or CONTRACTOR-furnished materials damaged during unloading and storage, damaged by weather, or other related causes.

C. Special attention shall be paid to instructions issued by the manufacturer for handling and storage of materials and/or equipment. These instructions shall be followed in every respect.

1.9 CONTRACTOR'S RESPONSIBILITIES AND WORK

A. The CONTRACTOR shall furnish all construction equipment, machines, tools, materials, field toilets, decontamination equipment, personnel protective equipment, and other services. All supplies, labor, and supervision that are necessary to complete the Work and requirements as described or implied in these Specifications and Drawings shall be the CONTRACTOR's full responsibility.

B. The CONTRACTOR shall provide all transportation for the items included in Section 1.9A from its headquarters or other locations to and from the site.

C. The CONTRACTOR shall furnish all housing, travel, and related allowances required by its employees. No housing facilities shall be permitted on the site.

D. The CONTRACTOR shall provide sufficient workmen and supervisory personnel to maintain work progress so that the various areas of work will be completed in accordance with the schedule or sequence defined elsewhere in these Specifications. If, in the opinion of OWNER or the ENGINEER, the work is behind schedule or is improperly staffed, the OWNER or ENGINEER will direct the CONTRACTOR to increase its complement of supervisors, workmen, or equipment so as to comply with the schedule. The CONTRACTOR shall discharge any such directives promptly and without expectation of additional compensation.

E. The CONTRACTOR shall make all overtime, premium, and incentive payments to the CONTRACTOR's employees that may be required to complete the Work in accordance with the schedule. No exceptions will be allowed for lack of performance, late material deliveries, or interference with other contractors possibly employed at the site or with OWNER or ENGINEER personnel.

F. The CONTRACTOR shall include the cost of all applicable federal and the State of New York sales tax in its Bid for all expenditures by the CONTRACTOR which will require payment of sales or use tax under State of New York Law.

G. The CONTRACTOR shall obtain any state, county, or local building permits required in the performance of its Work, except as otherwise provided by the ENGINEER.

H. The CONTRACTOR shall be able to secure a performance bond; cost for the bond shall be included in its Bid.

I. Prior to a Contract award, any questions or assistance the CONTRACTOR may request shall be directed to the ENGINEER exclusively.

J. By submitting a Bid for the Work, the CONTRACTOR acknowledges itself to be entirely familiar with the requirements prescribed by the State of New York that relate to the Work, with regulations prescribed by the New York State Department of Environmental Conservation (NYSDEC), with the regulations applicable to transporters of solid and hazardous wastes as prescribed by the United States Environmental Protection Agency, Resource Conservation and Recovery Act, with the rules and regulations of OSHA, and with local conditions, including weather, availability of supplies, and logistics. The CONTRACTOR further acknowledges itself to

be entirely qualified to perform the Work described by these Specifications and the Drawings.

K. The CONTRACTOR shall maintain the site of its activities completely free of refuse and debris at all times. The CONTRACTOR shall promptly comply with any directives from the OWNER or ENGINEER, regarding housekeeping. The CONTRACTOR shall provide the appropriate containers at convenient locations for the disposal of paper cups, disposable personnel protection equipment and other items of trash. Upon completion of the Work and before final payment, the CONTRACTOR shall completely remove all tools, equipment, supplies, materials, structures, and debris from the site and leave the premises clean. Debris shall be removed to disposal locations off the site that are selected by the CONTRACTOR, and are permitted to receive the debris to be disposed. Refuse shall be accumulated for a minimum of weekly disposal.

L. Safety

It is the CONTRACTOR's responsibility to perform all work in a safe manner, and meeting all applicable federal, state and local laws, OSHA, and those requirements imposed by the OWNER.

M. Environmental Protection

All Work to be performed by the CONTRACTOR as a part of this project is regulated by the NYDEC for the protection of the environment. By acceptance of the terms of the Contract, the CONTRACTOR acknowledges that it is familiar with the rules and regulations of the NYDEC. The CONTRACTOR further acknowledges that familiarity with, and accepts as a condition of this Contract all of the terms, stipulations, and commitments pertaining to the Work. Questions concerning the permits or regulations will be referred to the ENGINEER; the ENGINEER's decision in all cases will be final.

1.9 WORK PERFORMED BY OTHERS

A. Obtaining Town of Oyster Bay approval for required work on Town of Oyster Bay property.

B. Coordination with Navy for required work.

C. Obtain construction permits.

PART 2 PRODUCTS

2.1 REGISTERED TRADE NAMES

A. Products are referenced and specified throughout these Specifications by registered trade names. This does not constitute a recommendation of these products to the exclusion of other products. Equivalent products may be used if the submittal describing the alternate and equivalent product is reviewed and approved by the ENGINEER.

B. The reference to registered trade names establishes a standard of required function, dimension, appearance, and quality of the required equipment, materials or products.

PART 3 EXECUTION

3.1 HEALTH AND SAFETY

A. Based on a previous site hazard evaluation, it is anticipated that all operations described herein shall be conducted using Level D protection, unless work-area monitoring (by CONTRACTOR) indicates a necessity for upgrading. Level D protection consists of a hard hat, safety glasses, steel-toe and shank chemical-resistant boots, chemical-resistant gloves, and hearing protection (with a Noise Reduction Rating [NRR] of 35 decibels).

B. CONTRACTOR will be required to prepare and submit a site-specific HASP for OWNER approval in conformance with applicable OSHA regulations, including HAZWOPER (Title 29 of the Code of Federal regulations, Part 1926). The HAZWOPER requirement applies due to the presence of groundwater impacted with VOCs beneath the proposed locations of remedial wells. CONTRACTOR shall include the cost for the contractor HASP.

END OF SECTION

SECTION 01035

HEALTH AND SAFETY REQUIREMENTS

PART 1 GENERAL

1.1 DESCRIPTION OF WORK

A. This Section describes the minimum health and safety requirements for the performance of Work specified under this Contract. These requirements do not supersede, but are in addition to the OWNER's "Contractor Environmental, Safety, and Health Rules", any federal, Occupational Safety and Health Administration (OSHA), state or local regulations. If a conflict occurs between these requirements and current regulations, the more stringent shall apply.

B. These requirements are in accordance with and incorporate the health and safety guidelines established in the current editions of the Standard Operating Safety Guides, prepared by the United States Environmental Protection Agency (U.S. EPA) Office of Emergency and Remedial Response, and the Occupational Safety and Health Guidance Manual for Hazardous Waste Site Activities, U.S. Department of Health and Human Services.

C. The CONTRACTOR shall maintain for the duration of this Contract, a safety program, including a site specific CONTRACTOR Health and Safety Plan (CHASP), which will incorporate all required provisions of federal, state, and local safety regulations for construction. If impacted vapor, soil, or groundwater are encountered, the CONTRACTOR shall stop work in the affected area, and immediately notify the ENGINEER. CONTRACTOR shall prepare a task-specific CHASP for those elements of the Work that will be conducted in potentially affected areas. An outline of the minimum requirements for the CHASP is presented in Part 3 of this Section.

D. Plan for, and monitor that, all personnel comply with the basic provisions of OSHA Safety and Health Standards (29 CFR 1910) and General Construction Standards (29 CFR 1926). Take all necessary precautions for the safety of, and provide the necessary protection to prevent damage, injury, or loss to:
   1. All personnel on the Site.
   2. All the Work and all materials and equipment to be incorporated in the work area, whether on or off the Site.
   3. Other property at or adjacent to the Site.
   4. The general public on and off the Site when hazards are created by the CONTRACTOR'S operations.

E. Plan for, and monitor to ensure that all the CONTRACTOR (and subcontractor) personnel that will work in potentially affected areas comply with OSHA Hazardous Waste Operations and Emergency Response, Interim Final Rule (29 CFR 1910.120), as applicable to the specific tasks.

F. CONTRACTOR is solely responsible for the health, safety, and protection of all onsite personnel during the performance of the Work.

PART 2 PRODUCTS (NOT USED)

PART 3 EXECUTION

3.1 GENERAL

A. The site-specific CHASP shall be maintained on-Site at all times while conducting the Work, and shall include the following information at a minimum:
   1. Introduction of project scope of work and project personnel with respect to potential health and safety hazards.
   2. Responsibility.
   3. Potential Physical and Chemical Hazards.
   4. Personnel Protection Program.
   5. General Work Rules.
   6. Site Visitor Protection / Log In Procedure.
   7. Emergency Procedures.

3.2 INTRODUCTION OF PROJECT SCOPE OF WORK AND PERSONNEL

A. The introduction to the CHASP shall contain a brief description of the Site, including a general Site background and the potential health and safety hazards associated with the Work. Any unusual Site features shall also be addressed. In addition, the CHASP shall identify the Project Manager and the Health and Safety Officer assigned to this project.

3.3 POTENTIAL PHYSICAL AND CHEMICAL HAZARDS

A. All work (i.e., wells development, pipeline installation and groundwater treatment plant construction) shall conform to OSHA requirements as covered in 29 CFR 1926.650. Before any installation and/or excavation work begins, underground utilities such as electric, gas, water, and sewer mains shall be located and marked.

B. The CHASP shall address any physical hazard that may expose a worker to injury. List the hazards anticipated and the program for handling each potential hazard.

3.4 PERSONAL PROTECTION REQUIREMENTS AND METHODS

A. A description of on-site levels of protection and the personal protective equipment required for each level shall be included in the CHASP. Methods of monitoring the appropriate level of protection shall also be included.

B. Include in the CHASP an inventory of any personal protective equipment that will be supplied on-site and indicate the methods of updating the inventory and resupplying the necessary equipment during construction.

C. Equipment for personal protection is described in publications such as the Interim Standard Operating Safety Guides (U.S. EPA - November 1984) and the Occupational Safety Guides Manual for Hazardous Site Activities (NIOSH/OSHA/USCG/USEPA, October 1985).

D. Define the appropriate level of protection to be used for each work activity at this Site in the CHASP.

E. Define in the CHASP proper methods of personnel and equipment decontamination. This shall include designating a decontamination area, disposal of decontamination generated materials and equipment necessary for decontamination.

F. Personnel involved in site operations shall be enrolled in a medical surveillance program prior to participation in Site activities. The medical examination shall include a complete medical and work history as well as other specific tests as defined in the OSHA regulations (29 CFR 1910.120), or as deemed appropriate and necessary by the CONTRACTOR's Health and Safety Officer. Furthermore, the examining physician must certify in writing if a person can or cannot wear a respirator.

G. Any employee who develops a work-related time loss illness or injury during the period of the Contract shall be evaluated by the CONTRACTOR's physician prior to allowing the employee to return to the Site.

H. Staff all work positions related to trenching operations in potentially contaminated areas with personnel who have successfully completed an occupational hazards training program that exceeds or meets the requirements of OSHA 1910.120. Maintain all certification records and make these records available to the ENGINEER upon request.

I. Require that any person engaged in Site operations read the CHASP. Each person thus engaged shall sign a statement attesting that they have read and understand the CHASP and agree to follow the provisions it contains. Include a sample form for the attestment in the CHASP.

3.5 SITE SECURITY AND CONTROL

A. The CHASP shall describe methods for maintaining control of work areas during the implementation of the required Work. As a minimum, the requirements should include procedures for controlling and tracking personnel in each specific work area and controlling access to various work areas.

B. Maintain logs and reports covering implementation of the CHASP and present the format of these logs and reports as part of the CHASP. The format of the reports shall be developed by the CONTRACTOR and shall include, but not be limited to, inspection logs and weekly reports.

C. Accident Reports: If death or serious injuries or serious damages are caused, the accident shall be reported immediately to the ENGINEER. In addition, promptly report in writing to the ENGINEER all accidents whatsoever arising out of, or in connection with, the performance of the Work whether on, or adjacent to, the Site, giving full details and statements of witnesses. If a claim is made by anyone against the CONTRACTOR or any subcontractor on account of any accident, the CONTRACTOR shall promptly report the facts in writing to the ENGINEER, giving full details of the claim. The format of the accident reports shall be developed by the CONTRACTOR and be presented as part of the CHASP.

3.6 EMERGENCY PROCEDURES

A. All accidents and unusual events shall be dealt with in a manner so as to minimize continued health risk of site workers and the general public.

B. Include in the CHASP a list of emergency equipment and location of the equipment at the Site. At a minimum, the following equipment shall be available at the job trailer and readily available at the site within the active working zone and maintained fully stocked:
   1. Provide and maintain "Industrial" First aid kit supplies approved by a consulting physician to comply with CFR 1926.50(d)(i).
   2. Provide and maintain in each Work Zone in the Garage a Class ABC type portable fire extinguishers with a 2A:10BC rating. Additionally, fire extinguishers shall be carried on all motorized heavy-duty equipment.
   3. Provide and maintain Portable Emergency eyewash stations.

C. The names and phone numbers of all personnel and agencies that could be involved in emergency response should be identified in the CHASP. As a minimum, the following contacts shall be included on this list:
   1. Fire department.
   2. Police.
   3. Ambulance.
   4. Hospital.

D. A map showing the location of the hospital and the preferred route shall be included in the CHASP. Prior to the start of construction, the emergency personnel listed above shall be contacted and briefed on the planned work and the potential hazards that may be encountered. In addition, the route to the hospital shall be checked and traveled at least once by the Health and Safety Officer and the ENGINEER to verify its accuracy.

END OF SECTION

SECTION 01046

CONTROL OF WORK

PART 1 GENERAL

1.1 PERSONNEL AND EQUIPMENT

A. Furnish personnel and equipment which will be efficient and appropriate to secure a satisfactory quality of work and a rate of progress which will ensure the completion of the Work within the Contract Time and to the Owner's and other parties satisfaction. If at any time such personnel and resources appear to be inefficient, inappropriate or insufficient for securing the quality of work required or for producing the rate of progress aforesaid, Engineer may order the Contractor to increase the efficiency, change the character or increase the personnel and equipment and the Contractor shall conform to such order. Failure of the Engineer to give such order shall in no way relieve the Contractor of his obligations to secure the quality of the work and rate of progress required.

1.2 PIPE LOCATIONS

A. Locate pipelines substantially as indicated on the Drawings. The Engineer reserves the right to make such modifications in locations as may be found desirable to avoid interference with existing structures or for other reasons.

1.3 OPEN EXCAVATIONS

A. Adequately safeguard all open excavations by providing temporary barricades, caution signs, lights and other means to prevent accidents to persons and damage to property. Provide suitable and safe bridges and other crossings for accommodating travel by pedestrians and workmen. Remove bridges provided for access during construction when no longer required. The length or size of excavation will be controlled by the particular surrounding conditions, but shall always be confined to the limits prescribed by the Engineer. If the excavation becomes a hazard, or if it excessively restricts traffic at any point, the Engineer may require special construction procedures such as limiting the length of the open trench, prohibiting stacking excavated material in the street and requiring that the trench shall not remain open overnight.

B. Take precautions to prevent injury to the public due to open trenches. Provide adequate light at all trenches, excavated material, equipment, or other obstacles which could be dangerous to the public at night.

1.4 TEST PITS

A. Excavate test pits, at the direction of the Engineer, to locate underground pipelines or structures in advance of the construction. Backfill test pits immediately after their purpose has been satisfied and restore and maintain the surface in a manner satisfactory to the Engineer.

1.5 MAINTENANCE OF TRAFFIC

A. Unless permission to close a street is received in writing from the proper authority, place all excavated material so that vehicular and pedestrian traffic may be maintained at all times. If the construction operations cause traffic hazards, repair the road surface, provide temporary ways, erect wheel guards or fences, or take other measures for safety satisfactory to the Engineer.

B. Detours or partial road closure around construction will be subject to the approval of the Owner and the Engineer. Where detours are permitted, provide all necessary barricades and signs as required to divert the flow of traffic. Expedite construction operations while traffic is detoured. Periods when traffic is being detoured will be strictly controlled by the Engineer.

C. Take precautions to prevent injury to the public due to open trenches. Night watchmen may be required where special hazards exist, or police protection provided for traffic while work is in progress. Be fully responsible for damage or injuries whether or not police protection has been provided.

1.6 CARE AND PROTECTION OF PROPERTY

A. Be responsible for the preservation of all public and private property and use every precaution necessary to prevent damage thereto. If any direct or indirect damage is done to public or private property by or on account of any act, omission, neglect, or misconduct in the execution of the work on the part of the Contractor, restore such property to a condition similar or equal to that existing before the damage was done, or make good the damage in other manner acceptable to the Engineer.

1.7 PROTECTION AND RELOCATION OF EXISTING STRUCTURES AND UTILITIES

A. Assume full responsibility for the protection of all buildings, structures, and utilities, public or private, including poles, signs, services to buildings, utilities in the street, gas pipes, water pipes, hydrants, sewers, drains and electric and telephone cables, whether or not they are shown on the Drawings. Carefully support and protect all such structures and utilities from injury of any kind. Immediately repair any damage resulting from the construction operations.

B. Assistance will be given the Contractor in determining the location of existing services. The Contractor, however, shall bear full responsibility for obtaining all locations of underground structures and utilities (including existing water services, drain lines, gas, electric, cable and sewers). Maintain services to buildings and pay costs or charges resulting from damage thereto.

C. Notify all utility companies in writing at least 72 hours (excluding Saturdays, Sundays and Legal holidays) before excavating in any public way.

D. If, in the opinion of the Owner or Engineer, permanent relocation of a utility owned by the Owner is required, the Engineer may direct the Contractor, in writing, to perform the work. Work so ordered will be paid for at the Contract unit prices, if applicable. If relocation of a privately owned utility is required, the Engineer will notify the Utility to perform the work as expeditiously as possible. Cooperate with the Owner, Engineer, and Utility. No claim for delay will be allowed due to such relocation.

E. Coordinate the removal and replacement of traffic loops and signals, if required for the performance of the work, at no additional cost to the Owner.

1.8 WATER FOR CONSTRUCTION PURPOSES

A. In locations where public water supply is available, the Contractor may be allowed to use water without charge for construction purposes.

B. The express approval of the Owner shall be obtained before water is used. Waste of water shall be sufficient cause for withdrawing the privilege of unrestricted use. Hydrants shall only

be operated under the supervision of the Owner or Engineer's personnel.

1.9 MAINTENANCE OF FLOW

A. Provide for the flow of sewers, drains and water courses interrupted during the progress of the work, and immediately cart away and remove all offensive matter. Discuss the entire procedure of maintaining existing flow with the Engineer well in advance of the interruption of any flow.

1.10 COOPERATION WITH THIS CONTRACT

A. All firms or persons authorized to perform any work under this Contract shall cooperate with General Contractor and Subcontractors or trades and assist in incorporating the work of other trades where necessary or required.

B. Cutting and patching, drilling and fitting shall be carried out where required by the trade or subcontractor having jurisdiction, unless otherwise indicated herein or directed by the Engineer.

1.11 CLEANUP AND DISPOSAL OF EXCESS MATERIAL

A. During the course of the work, keep the site of operations as clean and neat as possible. Dispose of all residue resulting from the construction work and, at the conclusion of the work, remove and haul away any surplus excavation, broken pavement, lumber, equipment, temporary structures and any other refuse remaining from the construction operations and leave the entire site of the work in a neat and orderly condition.

B. In order to prevent environmental pollution arising from the construction activities related to the performance of this Contract, comply with all applicable Federal, State and local laws and regulations concerning waste material disposal, as well as the specific requirements stated in this Section and in other related Sections.

C. Disposal of excess excavated material in wetlands, stream corridors and plains is strictly prohibited even if the permission of the property owner is obtained. Any violation of this restriction by the Contractor or any person employed by him will be brought to the immediate attention of the responsible regulatory agencies, with a request that appropriate action be taken against the offending parties. The Contractor will be required to remove the fill and restore the area impacted at no increase in the Contract Price.

1.12 RESTORATION

A. The Contractor is required to restore all areas to conditions that existed prior to construction. Restoration outside of the pipe trench limits required as a result of the installation of the pipeline shall be at the Contractor's own expense. Restoration within the pipe trench limits is included in the pipe items in the Bid Form.

B. Existing public and private driveways and sidewalks disturbed by the construction shall be replaced to the limits and thicknesses existing prior to construction.

C. Existing landscaping disturbed by the construction shall be replaced to the existing conditions prior to construction.

D. Existing signs, lampposts, and fences which may be damaged by the Contractor or removed

by the Contractor during the course of project shall be reinstalled in a vertical position at the same location from which they were removed. Damaged items shall be replaced with an item equal to or better than the damaged items. A concrete anchor shall be provided as necessary, at no additional cost, to ensure a rigid alignment. Care shall be exercised in the reinstallation of all items to prevent damage to the newly installed pipelines or vaults.

E. Existing concrete, bituminous, timber, and granite curbing shall be protected. If necessary, curbing shall be removed and replaced after backfilling. Curbing which is damaged during construction shall be replaced with curbing of equal quality and dimension at the Contractor's expense.

PART 2 PRODUCTS (NOT USED)

PART 3 EXECUTION (NOT USED)

END OF SECTION

SECTION 01110

ENVIRONMENTAL PROTECTION PROCEDURES

PART 1 GENERAL

1.1 GENERAL PROVISIONS

A. Attention is directed to the Contract documents and all Sections within Division 1 – General Requirements that are hereby made a part of this Section of the Specifications.

1.2 DESCRIPTION OF WORK

A. Furnishing all labor, materials, and equipment and perform all work required for the prevention of environmental pollution in conformance with applicable laws and regulations, during and as the result of construction operation under this Contract. For the purpose of this Section, environmental pollution is defined as the presence of chemical, physical, or biological elements or agents which adversely affect human health or welfare; unfavorably alter ecological balances of importance to human life; affect other species of importance to man; or degrade the utility of the environment for aesthetic and/or recreational purposes.

B. The control of environmental pollution requires consideration of air, water, and land, and involves management of runoff, dust, noise and solid waste, as well as other pollutants. Work shall include installing, maintaining, and removing sedimentation and erosion control components within the Limits of Work.

C. This Section does not address erosion and sedimentation control requirements.

1.3 SECTION INCLUDES

A. Applicable Regulations

B. Protection of Groundwater

C. Protection of Land Resources

D. Protection of Air Quality

E. Maintenance of Pollution Control Facilities During Construction

F. Noise Control

G. Diesel Equipment Emission Controls

H. Spill And Discharge Control

1.4 APPLICABLE REGULATIONS

A. The Contractor shall comply with all applicable Federal, State and local laws and regulations concerning environmental pollution control and abatement.

B. Fines and related costs resulting from failure to provide adequate protection against any

environmentally objectionable acts and corrective action to be taken are the obligations of the Contractor.

1.5 NOTIFICATIONS

A. Engineer may notify the Contractor in writing of any non-compliance with the foregoing provisions or of any environmentally objectionable acts and corrective action to be taken. State or local agencies responsible for verification of certain aspects of the environmental protection requirements may notify the Contractor in writing, through Engineer, of any non-compliance with State or local requirements. After receipt of such notice from Engineer or from the regulatory agency through Engineer, the Contractor shall immediately take corrective action. Such notice, when delivered to the Contractor or his/her authorized representative at the site of the Work, shall be deemed sufficient for the purpose. If the Contractor fails or refuses to comply promptly, Engineer may issue an order stopping all or part of the Work until satisfactory corrective action has been taken. No part of the time lost due to any such stop orders shall be made the subject of a claim for extension of time or for excess costs or damages by the Contractor unless it is later determined that the Contractor was in compliance.

PART 2 PRODUCTS

2.1 Water

A. Water used for dust control and equipment washes shall be clean and free of salt, oil, and other injurious materials. The Contractor shall provide all necessary water.

B. The Contractor shall not operate any hydrants, valves, curb stops or corporations, or shall they draw any water from the system, without specific approval of the local authorities responsible for such use. Only local authorities will operate valves, hydrants, corporations, and curb stops unless otherwise directed by the local authorities.

C. Water meters shall be installed on hydrants prior to use. The Contractor shall consult with the local authorities responsible for such use prior to hydrant operation (see above).

2.2 ONSITE SPILL KIT

A. The Contractor shall provide the following minimum equipment to be kept onsite at all times during site work activities for any unexpected spills or discharges:
   1. Sand, clean fill and absorbent pillows,
   2. One drum (55 gallon, U.S. DOT 17-E or 17-H),
   3. Shovels

PART 3 EXECUTION

3.1 PROTECTION OF GROUNDWATER

A. Care shall be taken to prevent, or reduce to a minimum, any discharges to the ground of liquids that may infiltrate to the underlying groundwater. Water that has been used for washing or processing, or that contains oils or sediments that will reduce the quality of the groundwater shall not be discharged from the Site. Such waters shall be collected and disposed of by the Contractor in accordance with all applicable Federal, State and local regulations.

3.2 PROTECTION OF LAND RESOURCES

A. Land resources within the project boundaries and outside the limits of permanent work shall be restored to a condition, after completion of remediation activities that will appear to be natural and not detract from the appearance of the project. Confine all construction activities to Limits of Work areas shown on the Drawing.

B. Outside of the Limits of Work as shown on the Drawing, do not deface, injure, or destroy trees or shrubs, nor remove or cut them without prior approval. Snow fence or other approved equal shall be wrapped around tree trunks if heavy equipment has the potential to damage the tree bark, to prevent damage to trees.

C. The locations of storage and other facilities, required in the performance of the Work, shall not be within wetlands or resource areas.

3.3 PROTECTION OF AIR QUALITY

A. Burning – The use of burning at the project site for the disposal of refuse and debris will not be permitted.

B. Dust Control – Maintain all demolition excavations, stockpiles, waste areas, and all other work areas within or without the project boundaries free from dust which could cause the standards for air pollution to be exceeded and which would cause a hazard or nuisance to others.

C. The Contractor shall provide adequate means for the purpose of preventing dust caused by construction operations throughout the period of the construction contract. If Engineer indicates that the level of dust or odors is unacceptable, the Contractor shall employ measures necessary to reduce dust or odors to an acceptable level.

D. The Contractor shall implement engineering controls (e.g. watering, misting) to control dust whenever required by the Engineer.

3.4 MAINTENANCE OF POLLUTION CONTROL FACILITIES DURING CONSTRUCTION

A. During the life of this Contract, maintain all facilities constructed for pollution, erosion, and sedimentation control as long as the operations creating the particular pollutant area being carried out.

3.5 NOISE CONTROL

A. The Contractor shall develop and maintain a noise-abatement program and enforce strict discipline over all personnel to keep noise to a minimum. Local noise ordinances shall govern.

B. The Contractor shall execute construction work by methods and by use of equipment which will reduce excess noise.

C. Equipment shall be equipped with silencers or mufflers designed to operate with the least possible noise in compliance with Federal and State regulations.

D. The Contractor shall manage vehicular traffic and scheduling to reduce noise.

3.6 DIESEL EQUIPMENT EMISSION CONTROLS

A. All motor vehicles and construction equipment shall comply with all pertinent local, state, and federal regulations covering exhaust emission controls and safety.

B. All Contractor and Sub-Contractor diesel-powered non-road construction equipment with engine horsepower (HP) ratings of 50HP and above, which are used on the Project Site for a period in excess of 30 calendar days over the course of the construction period on the Project Site, shall be retrofitted with Emission Control Devices in order to reduce diesel emissions.

C. The reduction of emissions of volatile organic compounds (VOCs); carbon monoxide (CO) and particulate matter (PM) from diesel-powered equipment shall be accomplished by installing Retrofit Emission Control Devices.

D. Acceptable Retrofit Emission Control Devices for the Project shall consist of oxidation catalysts or other comparable technologies that are (1) included on the US Environmental Protection Agency (EPA) *Verified Technologies List for Clean Diesel* and/or the California Air Resources Board (CARB) *Currently Verified Technologies List*; and (2) are verified by EPA or CARB to provide a minimum emissions reduction of 50 percent for VOCs, 40 percent for CO and 20 percent for PM. Attainment of the required reduction in PM emissions can also be accomplished by using less polluting Clean Fuels. Verified technologies can be identified on the following website: https://www.epa.gov/verified-diesel-tech/verified-technologies-list-clean-diesel.

E. All diesel fuel used on the project site must be ultra low sulfur diesel which contains no more than 15 parts per million (ppm) sulfur.

F. Construction shall not proceed until the Contractor has submitted a certified list of the non-road diesel-powered construction equipment subject to this specification which either are or will be retrofitted with emission control devices. The list shall include (1) the equipment number, type, make, and Contractor/Sub-Contractor name; and the emission control device make, model, and EPA verification number. Contractors shall also submit a receipt or other documentation from a manufacturer or installer that verifies that appropriate equipment has been installed. The Contractor shall also identify any vehicles that will use Clean Fuels. Equipment that has been retrofitted with an emission control device shall be stenciled or otherwise clearly marked as "Low Emission Equipment".

G. The Contractor shall submit monthly reports, updating the same information stated in Paragraph F above, including the quantity of Clean Fuel utilized. The addition or deletion of non-road diesel equipment shall be indicated in the report.

H. The Contractor shall use methods to control nuisance odors associated with diesel emissions from construction equipment including but not limited to the following: (1) turning off diesel combustion engines on construction equipment not in active use and on trucks that are idling for five minutes or more; (2) locating diesel equipment away from the general public and sensitive receptors; and (3) utilizing electronically-powered scissor/man lifts.

I. All costs associated with implementation of the diesel equipment emissions control shall be borne by the respective Contractor or subcontractor and included in their cost for performing the work of the Contract.

3.7 SPILL AND DISCHARGE CONTROL

A. The Contractor shall provide equipment and personnel to perform emergency measures required to contain any spillage and to remove spilled materials and soils or liquids that become contaminated due to spillage. The collected spill material shall be properly disposed of at the Contractor's expense.

B. Costs to provide the above spill and discharge control materials shall be included in the

contract base bid price.

C. The Contractor shall provide the name, address and contact information for a spill response contractor in the event response activities are beyond the expertise of the Contractor.

END OF SECTION

SECTION 01140

WORK RESTRICTIONS

PART 1 GENERAL

1.1 DESCRIPTION OF WORK

A. This Section describes the conditions, restrictions, and expectations by which the CONTRACTOR shall proceed with completing the scope of work as presented in the design drawings and specifications. These conditions and restrictions have been defined by the OWNER and/or ENGINEER, and shall be complied with throughout the execution of the WORK.

1.2 JOB CONDITIONS

A. Mobilization
   1. The CONTRACTOR shall mobilize to the Site within two (2) weeks following award of the contract.

B. Security Requirements
   1. CONTRACTOR is solely responsible for security of all of its materials, tools, and equipment used and stored at the Site.

C. Site Access and Work Areas
   1. CONTRACTOR's access to the Site and hours of work are described in the Drawings in Construction Staging and Sequencing Notes.
   2. CONTRACTOR's vehicles, contractor personnel, and all deliveries to the construction Site shall be through the entrance located on Broadway. Deliveries to the facility shall be made Monday through Friday, between 7:00 AM and 5:00 PM in the presence of the CONTRACTOR's authorized personnel. Deliveries outside these times must be coordinated with the ENGINEER and OWNER.
   3. Provide signage to indicate the access route for construction employees and deliveries on the Site. Provide necessary barricades, lights, signage, and fencing to protect, warn, and direct all persons near the construction and staging areas.
   4. CONTRACTOR's personnel shall obey all traffic signs and posted speed limits at the Site.
   5. CONTRACTOR's access to the Site shall be limited to Construction and Staging Areas designated in the Construction Staging and Sequencing Plan at all times.
      a. If access to a private property is required, it must be coordinated with the ENGINEER.
      b. The ENGINEER will arrange to provide CONTRACTOR with access to a private property.
      c. Any movement of equipment, materials, and tools through private property shall be coordinated with the ENGINEER.
   6. CONTRACTOR shall keep the Site accessible to OWNER and Utility Companies for inspection or audit of Work.

D. CONTRACTOR Parking
   1. CONTRACTOR's personnel parking shall be limited to the area indicated on the Construction Staging and Sequencing Plan.
   2. Additional parking, if necessary, shall be coordinated with the ENGINEER and OWNER.

E. Construction Material Storage
   1. Storage of construction materials, tools, and equipment on the Site shall be limited to the Construction Staging Areas as shown on the Construction Staging and Sequencing Plan. Storage Area within the Construction Staging Area shall be approved by the ENGINEER. Materials shall be neatly stored and protected at all times. The CONTRACTOR is solely responsible for security of materials, tools, and equipment left on Site.
   2. CONTRACTOR will provide construction fence and gates around the Construction Staging Area. The fence shall be a 6-foot high chain link fence with gate opening provided as required. The fence shall be well maintained and properly constructed to withstand adverse weather conditions. Upon completion of construction, all areas and disturbed surfaces shall be repaired and/or replaced by the CONTRACTOR to a condition equal to that which existed prior to CONTRACTOR's mobilization to the Site. Any required repairs/replacements shall be done at the CONTRACTOR's expense.

F. Parking Lot Driveway and Lawn Area Repair
   1. Upon completion of work, the CONTRACTOR shall restore all paved and/or concrete surfaces to original condition within the Construction Staging Area, including striping of the road and parking areas.
   2. In areas disturbed by construction activities, restore lawn, shrubs, etc., to their original condition. Disturbed lawn shall be repaired by sod. Seeding is unacceptable.

G. Construction Debris
   1. Regular open dumpsters for disposal of construction debris shall be provided by the CONTRACTOR within the Construction Staging Area. The area around the dumpsters shall be kept clean and free of excess debris and dust during construction. All debris shall be removed by the CONTRACTOR weekly, at a minimum, and more frequently as required. Overfilling or placement of debris outside the dumpster is not allowed.

H. Soil/Concrete Disposal
   1. Disposal of soil/concrete generated during construction activities must be handled and disposed in accordance with local, state, and federal regulations.
   2. Temporary storage of soil/concrete shall be within the designated area. The soil/concrete must be removed and placed in the designated storage area at the end of each day, and removed from the site within one (1) week of generation.
   3. The CONTRACTOR is responsible for the separation of the concrete from the soil. Soil and concrete disposal will be the responsibility of the CONTRACTOR.

I. Construction Office
   1. CONTRACTOR's office area shall be provided with a temporary job trailer. Materials and equipment are also to be stored within the garage as indicated on the Construction Staging Plan. The CONTRACTOR shall provide any additional power hook-ups, telephone, and any other utilities for the office area.
   2. CONTRACTOR shall provide space within the Construction Office for ENGINEER to work.

J. Sanitary Facilities
   1. CONTRACTOR shall provide a sufficient number of chemical type sanitary structures for personnel on the project. They shall be located near the points of work. They shall be cleaned daily and shall be adequately serviced.

K. Temporary Utilities
   1. The CONTRACTOR shall arrange (including any required permit) with the relevant

UTILITY OWNER for any necessary temporary utilities.

2. The CONTRACTOR shall arrange for temporary utility installations, and removal of temporary utilities, to perform construction activities as necessary.
3. The CONTRACTOR shall arrange for payment of temporary utility usage as required by the Construction Bid Package.

L. Work in Inclement Weather
1. During freezing, stormy, or inclement weather, no Work shall be done except such that can be performed in a manner to ensure safe, quality work throughout. Time extensions will not be granted due to weather conditions.

M. Equipment Fueling
1. Equipment fueling and fuel storage shall be performed in accordance with local, state, and federal regulations.

1.3 RESPONSIBILITIES

A. The responsibilities of the ENGINEER and CONTRACTOR are defined in this Section, but shall not be construed as all-inclusive. Responsibilities may be adjusted by the OWNER or ENGINEER during the performance of the Work to ensure a complete and satisfactory project.

B. ENGINEER's Responsibilities:
1. Stop Work should the quality or quantity not comply with the terms of the contract;
2. Render approvals, clarifications, instructions, change orders, etc. (when appropriate);
3. On delivery, inspect material jointly with CONTRACTOR;
4. Observe, verify, and document that construction activities are consistent with design documents; and
5. Provide technical support.

C. CONTRACTOR's Responsibilities:
1. Perform all Work safely and in accordance with Federal, State, and local laws, regulations, and building codes, statutes, ordinances, and permits;
2. Obtain all licenses and permits necessary for the execution of the Work;
3. Provide accurate schedules, adhere to schedules, and provide updates of schedules approved by the ENGINEER;
4. Arrange for and deliver product data and samples to ENGINEER;
5. Perform testing and receive approvals for all materials prior to their delivery to the Site;
6. Receive and unload materials and equipment at the Site;
7. Provide and install all materials as specified and perform testing to document that installation meets contract requirements;
8. The CONTRACTOR shall provide sufficient workers and supervisory personnel to maintain Work progress so that the various areas of Work will be completed in accordance with the schedule or sequence defined elsewhere in these Specifications. If, in the opinion of the ENGINEER, the Work is behind schedule or is improperly staffed, the ENGINEER will direct the CONTRACTOR to increase its complement of supervisors, workmen, and/or equipment to comply with the schedule. The CONTRACTOR shall discharge any such directives promptly without additional compensation.
9. The CONTRACTOR shall make all overtime, premium, or incentive payments to the CONTRACTOR's employees that may be required to complete the Work in accordance with the schedule. No exceptions will be allowed by the OWNER for lack of performance, late material deliveries, or interference from others possibly employed at the site, or with OWNER's personnel.

10. The CONTRACTOR shall make all payments to CONTRACTOR's employees promptly to prevent any delay in the completion of the WORK.
11. By submitting a Bid for the Work, the CONTRACTOR acknowledges itself to be entirely familiar with the: (1) requirements prescribed by the United States and the State of New York that relate to the Work; (2) with local codes and requirements; (3) with the rules and regulations of the Occupational Safety and Health Administration (OSHA); and (4) with local conditions, including weather, availability of supplies, and logistics. The CONTRACTOR further acknowledges itself to be entirely qualified to perform the Work described by these Specifications.
12. The CONTRACTOR shall promptly comply with any directives from the ENGINEER, OWNER, or the OWNER's personnel regarding housekeeping. The CONTRACTOR shall provide the appropriate containers at convenient locations for the disposal of paper cups, disposable materials, and other items of trash. Upon completion of the Work and before final payment, the CONTRACTOR shall completely removal all tools, equipment, supplies, materials, structures, debris from the Site and leave the premises clean.

PART 2 PRODUCTS (NOT USED)

PART 3 EXECUTION (NOT USED)

END OF SECTION

SECTION 01170

SPECIAL PROVISIONS

PART 1 GENERAL

1.1 TESTING OF PIPING SYSTEMS, PIPE TRESTLE, TREATMENT SYSTEMS AND INSTRUMENTATION

A. Because of the project extent, installation of the horizontal pipeline will be constructed in two phases under two separate construction phases. This is Phase II, Phase I included well vault installation and initial piping.

B. All piping installed under this Contract shall be pressure tested in accordance with the Specifications. Instrumentation and controls, electrical components, and other components installed under this Contract shall be tested for functionality in accordance with requirements of applicable Specifications and as directed by the ENGINEER.

C. All treatment system equipment installed under this Contract shall be tested for functionality in accordance with requirements of applicable Specifications and as directed by the ENGINEER.

D. As part of the work under this Contract, the ENGINEER shall hold a retainage equal to 10 percent of the Contract price until testing of all piping, instrumentation, controls, equipment, and electrical wiring installed as part of this Contact has been completed to the satisfaction of the ENGINEER. When the CONTRACTOR can successfully demonstrate that the Contract Work has been completed in accordance with the Contract Documents and to the satisfaction of ENGINEER, Owner may release payment for the retainage within 90 days of ENGINEER's determination of substantial completion specific to Contract construction activities.

1.2 SLEEVES AND OPENINGS

A. Provide all openings, channels, chases, etc, in new construction and furnish and install anchor bolts and other items, as required to complete the Work under this Contract. Perform all cutting, coring, and rough and finish patching required in existing construction for the work of all trades.

1.3 PIPE MARKING

A. Pipe marking is included in Division 15, but it shall be the CONTRACTOR's responsibility to assist, as required by the ENGINEER, in identifying pipe contents, direction of flow and all additional work required for proper marking of the piping.

1.4 VALVE IDENTIFICATION

A. The CONTRACTOR will be furnished a valve identification index for all valves required for the Work showing a number, the location, type, function, and normal operating position, for each valve.

B. The CONTRACTOR shall furnish tags for all valves required for the Work. Valve tags shall be 2- inches in diameter, 19 gauge brass, with brass hooks suitable for attaching the tag to the valve. Tags shall be stamped or etched with the valve number and the information on

the valve schedule coded in a system provided by the ENGINEER. CONTRACTOR shall submit two (2) samples of the type of tag proposed and the manufacturer's standard color chart and letter styles to the ENGINEER for approval.

C. The CONTRACTOR shall provide and install valve tags on all valves required for the Work.

1.5 SPARE PARTS

A. Where spare parts are specified in the technical Sections, CONTRACTOR shall furnish all spare parts recommended by the manufacturer or system supplier for one (1) year of service. In addition, furnish all spare parts itemized in each Section.

B. CONTRACTOR shall collect and store all spare parts in an area designated by the ENGINEER. CONTRACTOR shall furnish the ENGINEER with an inventory listing all spare parts, the equipment they are associated with, the name and address of the supplier, and the delivered cost of each item. Copies of actual invoices for each item shall be furnished with the inventory to substantiate the delivery cost.

C. Spare parts shall be packed in cartons, properly labeled with indelible markings with complete descriptive information including manufacturer, part number, part name, and equipment for which the part is to be used and shall be properly treated for one (1) year of storage.

1.6 WEATHER PROTECTION

A. In the event of inclement weather, the CONTRACTOR shall protect the Work and materials from damage or injury from the weather. If, in the opinion of the ENGINEER, any portion of the Work or materials has been damaged by reason of failure on the part of the CONTRACTOR to so protect the Work, such Work and materials shall be removed and replaced with new materials and Work to the satisfaction of the ENGINEER.

1.7 MAINTENANCE OF RESIDENTS' OPERATIONS

A. The Work is located adjacent to private residential properties. The CONTRACTOR shall make every effort to not disrupt the private resident's activities and minimize the interference with the pedestrians' and residence traffic. Where construction activities will disrupt traffic flow or the private residents' access to their property, these activities will be identified in a schedule to the ENGINEER and Owner such that the disruptive activities can be identified and scheduled to minimize disruption.

1.8 PROPERTY OWNERS' SPECIAL REQUIREMENTS

A. CONTRACTOR and its subcontractors shall be subject to the Owner's special requirements as defined in the Construction Staging and Sequencing Plan. These requirements are part of the construction documents. The CONTRACTOR, its Subcontractors and their workforce shall remain in compliance with the Owner's requirements at all times.

PART 2 PRODUCTS (NOT USED)

PART 3 EXECUTION (NOT USED)

END OF SECTION

SECTION 01300

SUBMITTALS

PART 1 GENERAL

1.1 DESCRIPTION OF WORK

A. Materials, equipment, workmanship, design and arrangement of all Work performed under this Contract shall be in compliance with the design documents and subject to the approval of the ENGINEER.

B. Work Included:
   1. Requirements for all CONTRACTOR submittals to the ENGINEER.
   2. Procedures for submittal of CONTRACTOR-prepared "As-Built" drawings to the

ENGINEER. PART 2 PRODUCTS

2.1 LIST OF SUBMITTALS

A. Within 10 days after receipt of the Notice to Proceed, CONTRACTOR shall furnish the ENGINEER a full List of Submittals.

B. The List of Submittals shall identify all products that CONTRACTOR intends to incorporate in the Work. Omission from this list of any equipment, material, or product required by the Specifications shall not relieve CONTRACTOR of compliance with the Contract documents for providing the equipment, materials, and products and completing the Work, as specified. Each such omission discovered by the ENGINEER shall be brought to CONTRACTOR's attention for the purpose of revising the List of Submittals. The ENGINEER reserves the right to make any revisions to the List of Submittals after award of the Contract that is deemed necessary.

C. For each entry on the List of Submittals, reference to the applicable Specification Section shall be made, along with an indication of the type of submittal(s), which CONTRACTOR plans to make to the ENGINEER. More than one type of submittal may be required. The ENGINEER will approve the types of submittals offered, or request additional or alternative submittals. Types of submittals, product data and technical information are listed below:
   1. Progress schedule.
   2. Project Work Plan.
   3. Samples for testing, approval, or filing.
   4. Testing and Sample Analysis results.
   5. Certifications and Affidavits.
   6. Shop Drawings.
   7. Record documents/Construction As-Built Drawings.
   8. Operation and Maintenance Manuals.
   9. Schedule of Values.
   10. Miscellaneous Data.

D. Provide field dimensions for all steel fabrication and fit-up drawings prepared by CONTRACTOR.

E. For each item on the List of Submittals, CONTRACTOR shall indicate the proposed source of supply or manufacturer for that item.

F. The ENGINEER will review CONTRACTOR's proposed source of supply or manufacturer for each item and indicate his approval or disapproval of each, and return the List of Submittals to CONTRACTOR within 10 days of receipt.

G. The following conditions apply concerning approvals:
   1. Approval of a particular source of supply or manufacturing facility does not relieve CONTRACTOR of its obligation to fulfill all requirements of the Drawings and Specifications.
   2. Approval of a particular manufacturer shall in no way be construed by CONTRACTOR as obligating the ENGINEER to approve a Drawing for a product from that Manufacturer.
   3. Subsequent to disapproval of a particular source of supply or manufacturer, CONTRACTOR shall submit to the ENGINEER for approval within 10 days after notification of such disapproval a different source of supply or manufacturer for that product. The entire List of Submittals need not be resubmitted.
   4. As an alternative to disapproving a particular source of supply for equipment, materials, or products, the ENGINEER reserves the option to alter the type of submittal required for that product.

2.2 PROGRESS SCHEDULES

A. CONTRACTOR shall submit an estimated progress schedule with the Bid and a finalized progress schedule within 10 days after receipt of Notice to Proceed.

B. CONTRACTOR shall revise the finalized progress schedule every two (2) weeks, or more frequently per ENGINEER's request, to reflect the current status and progress of Work, and the operations necessary to complete Work as required and on schedule.

2.3 PROJECT WORK PLAN

A. CONTRACTOR shall prepare and submit a Project Work Plan within five (5) working days of receipt of the Notice to Proceed, in accordance with Section 01350 of these Specifications.

2.4 SAMPLES

A. Prior to or after commencement of Work, CONTRACTOR shall submit samples of materials for special tests, or for file purposes, as directed by the ENGINEER to demonstrate conformance to the Specifications. Such samples shall be furnished, taken, stored, packed and shipped by CONTRACTOR as directed by ENGINEER.

B. All samples shall be packed so as to reach their destination undamaged, in good condition, and shall be labeled to indicate the material represented, the name of Work and location for which the material is intended, and the name of supplier submitting the sample. To ensure consideration of samples, CONTRACTOR shall notify the ENGINEER in writing that the samples have been shipped and shall include a complete description of the samples. The Letter of Notification shall be enclosed with the samples.

C. CONTRACTOR shall submit data and samples sufficiently early to permit consideration, inspection, testing, and approval by ENGINEER before the materials and equipment are needed for incorporation into the Work. The consequences of failure to provide adequate time for ENGINEER approval shall be CONTRACTOR's sole responsibility.

D. To demonstrate the proficiency of workmen or to facilitate the choice among several materials, CONTRACTOR shall provide such samples of workmanship required by ENGINEER.

E. When required, CONTRACTOR shall provide the ENGINEER triplicate sworn copies of manufacturer's shop or mill tests or reports from independent testing laboratories relative to the materials, equipment performance ratings, and specific data.

F. The cost of samples, sample testing, and analysis associated with the approval of proposed materials and/or methods shall be borne in their entirety by CONTRACTOR except as explicitly identified herein as performed by the ENGINEER.

2.5 CERTIFICATES AND AFFIDAVITS

A. Where specified in the Specifications that a certificate or affidavit be submitted to the ENGINEER for a particular material, product or product component, such submittals shall be made in accordance with the following:
   1. **Equipment, Materials, and Products**: A Certificate of Compliance shall indicate that the equipment, materials, products, or product components comply with the requirements of the Specifications, and it shall be accompanied by test results and/or other technical data substantiating such compliance. The certificate shall be supplied by the material supplier or product component manufacturer.
   2. **Installation**: A Certificate of Compliance shall indicate that the equipment or system has been properly installed in compliance with manufacturer's instructions and is ready to be operated. The certificate shall be supplied by the equipment or system manufacturer or manufacturer's representative.

B. Each certificate shall include a signed, sworn statement by an official of the company originating the certificate attesting to the truth and accuracy of all information contained in the certificate. If such attestation of truth and accuracy cannot be included in the certificate itself, it must be provided in the form of an affidavit accompanying the certificate.

2.6 SHOP DRAWINGS

A. Three (3) copies of each Drawing certified as being in compliance with the contract documents and signed by the CONTRACTOR for construction shall be submitted for the approval of the ENGINEER as soon as possible after approval of the List of Submittals, and with due regard to the sequence in which such information will be required. This includes, but is not limited to, materials and products, details of any deviation that CONTRACTOR proposes from the details as indicated on the Drawings, in the specification and Construction Sequence, and any details not specifically indicated on the Drawings. It is the CONTRACTOR's responsibility to provide detailed, dimensioned shop and fit-up Drawings for approval, based on field measurements of actual conditions, indicating proposed methods to install Work and the equipment, materials, and products being furnished under the Contract. Copies of the Drawings will not be accepted for submission as Shop Drawings.

B. Drawings shall be submitted in proper sequence with due regard to the time required for reviewing, approving, and transmitting.

C. Drawing submissions shall be made to the ENGINEER by the CONTRACTOR only. Submittals prepared by subcontractors and suppliers shall be reviewed by the CONTRACTOR for compliance with the contract documents. Drawings provided to the ENGINEER shall be signed and certified as meeting specified project requirements by the CONTRACTOR prior to submittals to the ENGINEER.

D. All Drawings covering related items of equipment, materials, and products or integrated systems of equipment, materials, and products shall be submitted at the same time so that their complete installation can be adequately reviewed. No partial submissions will be considered. When it is necessary to meet the material delivery times required by the Contract, the ENGINEER will approve partial submissions when accompanied by sufficient data to allow the ENGINEER to determine the effect on the final design of other facilities being furnished under this Contract.

E. CONTRACTOR shall certify in writing that all submittals from subcontractors meet the specifications. All submittals from subcontractors shall be approved by the CONTRACTOR prior to submittal to the ENGINEER.

F. Drawings shall be submitted to the ENGINEER that have been checked and stamped with the approval of CONTRACTOR. CONTRACTOR's stamp shall include, but not be limited to, the submittal date, contract number, project name, submittal number, corresponding specification and paragraph number, CONTRACTOR's company name, signature, and a notation that the Drawing has been reviewed by CONTRACTOR and is in conformance with the referenced specification section. Two (2) copies of the Drawings and data submitted by CONTRACTOR for approval will be returned by the ENGINEER to CONTRACTOR with comments such as, "No Exceptions Noted", "Exceptions Noted", or "Returned for Resubmission". CONTRACTOR shall correct the original drawings and data, if required, and resubmit three (3) copies of the revised Drawings and data. Two (2) copies of such revisions, reviewed by the ENGINEER will be returned to CONTRACTOR.
   1. Drawings shall be numbered in chronological order using 001, 002, etc. as the format.
   2. All Drawings, when practical, shall be limited in size to 11" x 17", and have borderlines set back 1/2" on top, bottom, and right-hand side of the sheet. If the scale at which the drawings must be made for clarity and the size of the equipment assembly or arrangement make it impractical to prepare the drawings in 11" x 17" format, larger sheet sizes may be used.
   3. CONTRACTOR shall revise his original Drawings to reflect any and all changes made to the equipment, materials, or products in the field during construction. When the equipment, materials or products have been finally accepted, CONTRACTOR shall submit three (3) copies of any Drawing(s) or data that have been so corrected. The ENGINEER will add these copies to the bound sets or data submitted as specified below.

G. At the time of each submission, CONTRACTOR shall notify the ENGINEER in writing of any submittal's deviation from the Drawings and Specifications. Failure to note deviations shall not excuse CONTRACTOR from complying with the requirements of the Specifications.

H. No equipment, materials, or products for which Shop Drawings and detailed product information have been submitted for approval shall be delivered to the Site or incorporated into Work until CONTRACTOR has received copies of such approved drawings or until the ENGINEER has authorized him in writing to do so.

I. For drawings, product data, samples, test reports, or other submittals that require more than two (2) reviews for the same material or equipment by the ENGINEER, the ENGINEER reserves the right to obtain compensation from the CONTRACTOR to defray the cost of the additional submittal reviews that result from submittal incompleteness, incorrect information, or non- compliance with the contract provisions. The ENGINEER will notify the CONTRACTOR of the hourly rates for the additional submittal reviews, and will issue an invoice to the CONTRACTOR for the additional review cost. Payment of the additional submittal review costs by the CONTRACTOR is required within 30 days of invoicing. Past due invoices will have the amounts due, deducted from the contract amount due to the

CONTRACTOR.

J. ENGINEER's approval of CONTRACTOR's submitted data is for general conformance only. Although the ENGINEER may review submitted data in detail, such review is an effort to discover errors and omissions in CONTRACTOR's submissions and to assist CONTRACTOR in coordinating and expediting his Work. It shall in no way relieve CONTRACTOR of its obligation and responsibility to coordinate Work or to relieve CONTRACTOR of his responsibility in fulfilling the purpose and intent of the Contract.

2.7 AS-BUILT DRAWINGS

A. CONTRACTOR shall maintain at the Site a complete set of Drawings as issued with the Contract Documents. CONTRACTOR shall also maintain an As-Built drawing set to show any and all approved deviations made by CONTRACTOR during construction. This As-Built drawing set shall be labeled "AS-BUILT" with 1/2" high block letters, and submitted to the ENGINEER at the completion of the project. All such revisions shall be redline marked in the As-Built drawing set weekly as the project progresses to ensure that the As-Built Drawing set properly depicts all deviations from the original design that were made during the construction process. The As- Built drawing set must be marked prior to any item becoming inaccessible to enable the ENGINEER to verify that the As-Built Drawing set was properly marked.

B. CONTRACTOR's As-Built drawing set made during construction shall be available to the ENGINEER's representative throughout the construction period, and shall be delivered to the ENGINEER according to the requirements of paragraph A.

C. Upon project completion, CONTRACTOR shall submit to the ENGINEER a set of complete, accurate, and legible As-Built construction drawings with complete redline corrections for incorporation into the as-built (record) drawings by the ENGINEER. Final payment shall not be made until the As-Built drawing set is received and approved of by the ENGINEER.

2.8 SCHEDULE OF VALUES

A. CONTRACTOR shall submit a preliminary Schedule of Values with the List of Submittals and a finalized Schedule of Values within ten (10) days of receipt of comments by the ENGINEER on the estimated progress schedule. The Schedule of Values shall be provided in the form specified herein.

B. The Schedule of Values shall be a detailed cost breakdown for all Work, and shall include quantities and unit prices of items aggregating the Contract Price and shall subdivide the Work into component parts in sufficient detail to serve as the basis for monthly progress payments during construction. Such prices shall include an appropriate amount of overhead and profit applicable to each item of Work.

C. The Schedule of Values shall be organized in a tabular format with the following clearly labeled columns as a minimum:
   1. **ITEM NUMBER**: Number of items according to the Section of these Specifications to which it corresponds.
   2. **ITEM DESCRIPTION**: Written description of item.
   3. **UNIT**: The unit of measure upon which the unit cost is based.
   4. **NUMBER OF UNITS**: The number of units upon which the total cost for the item will be based.
   5. **UNIT MATERIAL COST**: The cost of the raw materials or products needed for the item on a unit cost basis.

6. **UNIT LABOR COST**: The cost of labor needed to fabricate, install, or otherwise construct the item on a unit cost basis.
7. **UNIT OVERHEAD AND CONTRACTOR's PROFIT PRICE**: Overhead and profit distributed on a unit basis.
8. **TOTAL UNIT COST**: Sum of unit material cost, unit labor cost, and unit overhead and profit cost.
9. **EXTENSION**: The total cost for the item determined by multiplying the number of units by the total unit cost.

D. The Schedule of Values shall include a row labeled TOTAL EXTENSION that shall be the sum of the extension column for each of the individual items. The dollar value shown as the total extension shall match exactly the Contract Price as shown in the Agreement.

E. The Schedule of Values shall contain sufficient detail to serve as the basis for progress payments for materials or equipment that will be shop fabricated and for lump sum items. The schedule shall include any such items CONTRACTOR wishes to break out for purposes of progress payments.

F. The Schedule of Values shall be accompanied by a schedule of anticipated progress payment requests. This shall be based on the progress schedule and Schedule of Values and the two shall be closely coordinated. Whenever the progress schedule is updated or revised, CONTRACTOR shall resubmit a revised schedule of anticipated progress payment requests. The payment schedule shall also be updated each time an actual payment request varies more than 10 percent from the schedule. The progress payment schedule shall take into consideration the 10 percent retainage as set forth in the Contract Documents.

G. The Schedule of Values shall be subject to review and approval by the ENGINEER. If in opinion of the ENGINEER the Schedule of Values does not contain sufficient detail or appears to be unbalanced, the ENGINEER may require CONTRACTOR to revise and resubmit the Schedule of Values and/or provide documentation to justify CONTRACTOR's distribution. CONTRACTOR shall correct such deficiencies and resubmit the Schedule of Values.

2.9 MISCELLANEOUS DATA

A. Any other submittal required by these Specifications but not directly addressed under this Section shall be submitted in accordance with the requirements for Drawings.

PART 3 EXECUTION

3.1 GENERAL

A. Submittal correspondence shall be addressed to the ENGINEER at the following

address:

Arcadis of New York, Inc./Arcadis CE, Inc.
2 Huntington Quadrangle
Suite 1S10
Melville, NY 11747
ATTN: Chris Engler

B. Procedures for handling submissions will be reviewed during the Pre-Construction Meeting.

3.2 ALTERNATIVES TO SPECIFIED PRODUCTS

A. The Specifications may indicate the name of a manufacturer, a trade name, or a material to be used in the Contract. Reference made to a particular product of the manufacturer is made to identify a particular design, quality, construction arrangement, or style.

B. CONTRACTOR may propose alternative equipment, material or products only when the corresponding specifications section includes an "or approved equal" provision. Where CONTRACTOR proposes to use a substitute product for that specified, product data sheets, specifications, and vendor drawings shall be submitted to the ENGINEER for approval; complete information on such substitute product including required redesign of the structure, equipment, or any other part of the Specification requiring modification as a result of the use of the requested substitute must be submitted to the ENGINEER for review. All such redesign and detailing required as a result thereof shall be prepared by CONTRACTOR at its own expense, including regulatory permit acquisition for the modification(s). Requests for additional payment for such substitution will not be considered. The ENGINEER must approve all substitutions prior to installation or use by CONTRACTOR.

C. If the CONTRACTOR or any of its subcontractors proposes to provide products as "equals" to those specified, it shall be his responsibility to furnish complete, specific detailed information to the ENGINEER for approval. This information from the manufacturer or supplier of the product shall include a point-by-point comparison of the proposed product design details to the Specification requirements to be met. In the event the Specifications mention a specific manufacturer, a point-by-point comparison of the product specified and that proposed to be provided shall be furnished by CONTRACTOR. The burden of responsibility in furnishing this information lies solely with the CONTRACTOR. If incomplete or irrelevant data is submitted as evidence of compliance with this requirement, the request for approval to provide this specific substitute will not be considered. All product "equals" must be approved by the ENGINEER prior to installation or use by CONTRACTOR or CONTRACTOR's subcontractors.

D. All fit up costs for equipment, materials, or products proposed as equals to those specified shall be the responsibility to the CONTRACTOR.

END OF SECTION

SECTION 01350

ADMINISTRATIVE REQUIREMENTS

PART 1 GENERAL

1.1 DESCRIPTION OF WORK

A. CONTRACTOR'S PROJECT SUPERINTENDENT
   1. CONTRACTOR shall employ a qualified Project Superintendent for the duration of the Work. The Project Superintendent shall be experienced in fieldwork involving foundations, piping, electrical, mechanical and other activities as described in Section 01010. CONTRACTOR shall employ an adequate project coordination staff to assist the Project Superintendent in the required control of Subcontractors, development of Progress Schedules, and preparation of submittals in accordance with Section 01300.
   2. The Project Superintendent shall be responsible for the completion of the Work in general, and for the following specific duties:
      a. Coordinate the Work of CONTRACTOR's labor and equipment, and that of the Subcontractors.
      b. Coordinate the schedule by which the various tasks are completed.
      c. Participate in Project meetings with the ENGINEER, OWNER, and PROPERTY OWNER.
      d. Schedule and conduct meetings with Subcontractors and other concerned parties as necessary to maintain the Project schedule, resolve matters in dispute, and coordinate use of utilities and other resources.
      e. Ensure that quality control objectives are met, and that quality control work is considered in the Project schedule so as to avoid delays in the work.
      f. Ensure that all Laws, Regulations, and Permit requirements are complied with.
      g. Coordinate with the ENGINEER and others who are responsible for other aspects of the Project.
      h. Be on-site at all times during the Work.

1.2 SUBMITTALS

A. CONTRACTOR shall prepare and transmit the submittals described herein, in accordance with Section 01300.

B. CONTRACTOR shall submit a Project Work Plan that shall include a tabulation of Project data and key personnel, including the following:
   1. Submit to Engineer the Project Superintendent's resume detailing past project involvement and scopes of work for the last 5 years. Resume including home telephone number or other after-hours telephone number and cellular telephone number.
   2. Identification and contact information of key Project personnel including key personnel for major Subcontractors.
   3. List of major equipment, principal items, systems, and materials.

C. CONTRACTOR shall submit CONTRACTOR'S Weekly Construction Report as required by Paragraph 1.5 of this section of the Specifications.

1.3 PROJECT MEETINGS

A. General:
   1. CONTRACTOR shall schedule and provide physical arrangements for all meetings throughout the progress of Work.
   2. Representatives of the ENGINEER, CONTRACTOR, Subcontractors, and others who are responsible for portions of the Project shall attend meetings, as needed.

B. Preconstruction Conference
   1. After the ENGINEER and CONTRACTOR have executed the Agreement, the ENGINEER will schedule a preconstruction conference to be held at the Site, which shall be attended by the CONTRACTOR, CONTRACTOR'S Project Superintendent, ENGINEER, and others as appropriate. The meeting will be scheduled to be held following execution of the Agreement and before commencement of the Work. The purpose of the meeting will be to ensure that all parties understand their responsibilities and the procedures that will be used to assure efficient completion of the Work within the time limit specified.
   2. Agenda items may include:
      a. Distribution of Contract Documents.
      b. Designation of responsible personnel for all parties, lines of communication, and lines of authority.
      c. Scope of work and the anticipated schedule of operations.
      d. Critical work sequencing.
      e. Submittal and field test reporting procedures.
      f. Record documents and reporting.
      g. Site safety and security procedures.
      h. List of major subcontractors.
      i. Procedures for processing change orders and field changes.
      j. Use of premises including equipment and material storage.
      k. Major equipment deliveries.
      l. Housekeeping procedures.

C. Weekly Progress Meetings:
   1. CONTRACTOR shall attend scheduled weekly progress meetings at the Project site to review progress of the Work, Project schedule, submittal status and delivery schedule, contract modifications, and other matters that may merit discussion and resolution.

D. Other Meetings: In accordance with Contract Documents or as may be required by the ENGINEER.

1.4 CONTRACTOR'S EQUIPMENT AND WORK FORCE

A. CONTRACTOR shall submit all requests for information to the ENGINEER in writing. Requests for information shall be numbered sequentially and shall include the related Specification section number or Drawing number.

1.5 CONTRACTOR'S WEEKLY CONSTRUCTION REPORT

A. CONTRACTOR shall prepare a Weekly Construction Report in a format acceptable to the ENGINEER. The Weekly Construction Report shall be prepared and submitted to the ENGINEER 24 hours prior to the weekly progress meeting.

1. Weekly Construction Reports shall include:
   a. Number and labor classification of workers for each trade.
   b. Hours of work for each trade.
   c. Equipment on site, and materials furnished.
   d. Major work activities performed, and progress thereof.
   e. Weather conditions and temperatures, if affecting work schedule.
   f. Unforeseen subsurface conditions.
   g. A list of Submittals transmitted to or received from the ENGINEER and review status.
   h. Meetings attended.
   i. Accidents, safety, and security issues.
   j. Tests and inspections performed and their results.
   k. Reasons for any construction delays.
   l. Units of Time and Materials Work, subject to verification by the ENGINEER.

B. The Weekly Construction Reports will be used to substantiate any claim for delay, impact, or change and shall contain sufficient information to document each potential impact.

1.6 RECORD DOCUMENTS

A. During the course of the Work, CONTRACTOR shall maintain the following records up-to-date at the Project site at all times, shall provide periodic access to these records for ENGINEER's review, and shall submit the following documents to the ENGINEER prior to final Application for Payment:
   1. General Records:
      a. CONTRACTOR'S Daily Construction Reports.
      b. Daily safety meeting reports.
      c. Accident reports.
      d. Minutes of all meetings.
   2. Test and Analytical Results: One copy of all test and analytical results.
   3. Manifests and Bill of Lading: One copy of all waste manifests and bills of lading.
   4. Construction Photographs:
      a. Provide photographs of preexisting site conditions prior to beginning Work. Photographs shall be approved by ENGINEER.
      b. Provide photographs of construction throughout progress of Work. Photographs shall be taking during construction at sufficient intervals to show the progress of the work and upon completion. Photographs shall be approved by ENGINEER.
      c. Take photographs as evidence of existing project conditions.
      d. Identify each print: name and Project number, orientation of view, date and time of view, and provide on a CD.

1.7 WORK HOURS

A. Working hours shall be dictated by the work activity at hand, avoiding interference with on-going tenant work activity and the availability of access to the specific work area.

B. Schedule all noisy construction, such as concrete sawing, core drilling, and anchor drilling only at prearranged times approved by the ENGINEER.

C. CONTRACTOR shall submit notice to the ENGINEER no less than 48 hours prior to requesting any necessary change of Work hours. Such notice shall include Work activities to be conducted, the location of the work activities, the hours and days that those activities will be conducted, and the requested duration of the change in Work hours.

1.8 COORDINATION OF CONTRACTOR'S WORK WITH OTHERS

A. Coordination of Work: CONTRACTOR shall maintain overall coordination for the execution of the Work. CONTRACTOR shall obtain from any Subcontractors a similar schedule and shall be responsible for all parties maintaining these schedules or for coordinating required modifications.

B. Work by Others: the ENGINEER, and others may be working on the Project while the Work is in progress. CONTRACTOR shall coordinate and schedule its Work in cooperation with other contractors and with the ENGINEER.

C. The ENGINEER will assign a Resident ENGINEER/Construction Quality Assurance (CQA) Manager. The Resident ENGINEER will carry out the duties and have the responsibilities assigned to it in the Contract Documents.

D. Utilities: CONTRACTOR shall coordinate the Work with various utility companies serving the Project site and shall secure any required permits and approvals.
   1. CONTRACTOR must determine if the following utilities are available to the Project Site for use by the CONTRACTOR:
      a. Natural Gas
      b. Electricity
      c. Water
      d. Sewer
      e. Telephone
      f. High Speed Internet Service
   2. CONTRACTOR shall be solely responsible for notifying applicable utility companies prior to commencing any work and for response to any emergencies that may arise during the Work.

PART 2 PRODUCTS (NOT USED)

PART 3 EXECUTION (NOT USED)

END OF SECTION

SECTION 01400

QUALITY REQUIREMENTS

PART 1 GENERAL

1.1 DESCRIPTION OF WORK

A. Work Included:
1. Where applicable in the Contract Documents, the minimum acceptable quality of equipment, materials, and workmanship has been defined either by a manufacturer's name and product identification, or by reference to recognized industry standards.
2. To ensure that the necessary materials and equipment are furnished, procedures are established herein to allow CONTRACTOR to obtain approval by the ENGINEER for work which will be in complete accordance with the Contract Documents; and for substitutions to be approved by the ENGINEER or accepted by the ENGINEER if sufficient data for unqualified approval are submitted by CONTRACTOR.
3. For products which do not differ significantly from those specified in the referencing Section; or are, in CONTRACTOR'S judgment, of "equal" or higher quality, the submission of the Materials List as specified in Section 01300 and its approval by the ENGINEER, will provide the basis for quality control. Actual quality control during manufacturing will be maintained by the approval of the Drawings and by the final submissions of the manufacturer's Certificates of Compliance, and the Testing and Inspection Services; specified herein. The ENGINEER has final determination in acceptance of "or equal" substitutions submitted by the CONTRACTOR.
4. CONTRACTOR can propose alternate equipment, material or products only when the corresponding specifications section includes an "or approved equal" provision. If CONTRACTOR proposes to provide products as "equals" to those specified in the referencing Section on which the design is based, it shall be CONTRACTOR'S responsibility to furnish complete, specific, detailed information to the ENGINEER for approval, in which the requirements of the Contract Documents are shown to be met.
   a. These data shall be prepared or approved by the manufacturer of the proposed product, and shall include a point-by-point comparison between the features of the proposed product and the corresponding features of the product specified in the Contract Documents as the one on which the design is based. The features of the product specified shall be those of the manufacturer's model specified (including all standard catalog features and any specified options) which were published on the date of the Invitation for Bids.
   b. If applicable, CONTRACTOR shall also furnish a description of the changes in structures and other equipment, which will have to be made because of the proposed substitution. All changes to structures and equipment will be at the CONTRACTOR'S expense and not adversely impact the project schedule.
   c. The burden of responsibility for furnishing these data is with CONTRACTOR.
   d. A request to furnish the substitute product will not be considered if incomplete or irrelevant data are submitted as evidence of compliance with the requirements per Section 01300 of these Specifications.

1.2 QUALITY CONTROL

A. Qualification of Manufacturer
1. The manufacturer shall be regularly engaged in the business of manufacturing material and/or equipment of the type required by the referencing Section.

2. The manufacturer shall be one of those specified by name in the referencing Section, or must be specifically approved by the ENGINEER.
   a. Requests for approval of a manufacturer not named in the referencing Section shall be submitted to the ENGINEER, accompanied by the following information:
      1) List of at least five installations of material and/or equipment of comparable size and capacity, and operating under anticipated service conditions; showing location, installation date, model, capacity, and service.
      2) If the manufacturer cannot list five installations, list all those, which have been made, if fewer than five.
      3) Complete literature, technical, and performance data describing the proposed equipment.
      4) Manufacturer's standard installation, operating, and maintenance instruction bulletins for the proposed equipment.
   b. The ENGINEER will notify CONTRACTOR, in writing, that the manufacturer selected by CONTRACTOR is approved, or will request further data to justify the selection. Upon the approval of the manufacturer, CONTRACTOR shall update the Materials List and submit this to the ENGINEER.
   c. If the ENGINEER requests additional data on the actual performance of the equipment or system, CONTRACTOR shall submit evidence that the equipment or system proposed has been installed and has been in operation for a period prior to the date of Submission of the Bid, and that at least two years of such service are considered satisfactory by the operating superintendents of the facilities in which installed. The service and operating conditions for the equipment or system shall be as similar to those described in these Contract Documents, as is practical.
      1) The ENGINEER will review the experience record of the equipment or system proposed to be installed by CONTRACTOR, and will advise CONTRACTOR, in writing, as to whether or not it appears to be suitable for installation under this Contract.
3. When so specified in the referencing Section, the manufacturer of the equipment or supplier of the system shall furnish, as requested by the ENGINEER and at no additional cost to the ENGINEER, the services of a qualified Technical Representative, to advise the ENGINEER and the CONTRACTOR in the installation and operation of the equipment or system; and to certify to the ENGINEER, in writing, that the equipment or system is properly installed and ready to be operated.

B. Qualifications of Installers:
   1. CONTRACTOR shall provide at least one person who shall be present at all times during the installation of the items of equipment furnished under the referencing Section, who is thoroughly familiar with the type of materials being installed and with the manufacturer's recommended methods of installation and operation; and who shall direct all the Work performed on the equipment item being installed at no additional cost to the ENGINEER.
   2. The person providing the above service need not be an authorized representative of the manufacturer; but the Certificate of Compliance required by Section 01300 must be issued by the manufacturer of the equipment or supplier of the system.

C. Codes and Standards:
   1. Equipment and installation shall comply with all pertinent local, State and Federal codes and regulations.
   2. Materials, equipment, and installation shall comply with:
      a. The minimum standards of the governmental agency or industry standardizing organization publishing standards applicable to such Work.
      b. The requirements of specific standards listed in the referencing Section.

c. Where the standards of several organizations (including the manufacturer's own published standards) are applicable to the same Work, the Work may be done in accordance with any such other standards that require an "equal" or higher quality construction for the specified service than those listed in the referencing Section. The selection of such an alternate standard to the one specified shall be subject to the approval of the ENGINEER.

3. Where any provisions of pertinent codes or standards are in conflict with the requirements of the Contract Documents, the provisions requiring greater safety or operability, or higher quality construction for the specified service, shall govern; unless specific exemptions to such provisions are made in the referencing Section. The final determination shall be made by the ENGINEER.
4. If the mandatory standards of governmental agencies are revised subsequent to the date of submittal of the Bid, but are made applicable to the Work under this Contract, CONTRACTOR shall advise the ENGINEER as to the additional cost required to comply with such revisions, and a Change Order will be issued to cover such costs. The cost of rework required for Work not complying with such revised regulations, but installed after the effective date of such code revisions, will be at CONTRACTOR'S expense.

PART 2 PRODUCTS

2.1 DESIGN

A. The design of certain items in the facility, as shown in the Contract Documents, is based on the performance and dimensions of specific equipment items as furnished by particular manufacturers.

1. When the performance or dimensions of such items are proprietary, and furnished only by one particular manufacturer, the referencing Section will state the design is based on a particular model of that manufacturer.
   a. CONTRACTOR may furnish and install corresponding products produced by an alternate manufacturer; either one named as an alternate in the referencing Section, or any other one selected by CONTRACTOR and approved or accepted by the ENGINEER on the basis of the information supplied as requested in Part 1 of this Section.
   b. CONTRACTOR shall furnish the ENGINEER with those data on the particular model of the alternate manufacturer, which are required to demonstrate that the proposed equipment or system is at least equivalent in performance in the specified service to the equipment or system on which the design is based. The ENGINEER's evaluation will include a determination of the ability of the proposed equipment to meet the requirements of these Specifications and Drawings; and a comparison of the costs of Operation and Maintenance. If CONTRACTOR proposes a modification to the Contract Price due to the substitute equipment, this will also be evaluated by the ENGINEER.
   c. Approval by the ENGINEER of the proposed substitution will not be capriciously withheld.
   d. The design of the facilities associated with the equipment or system for which a substitution is proposed, may be affected by such substitution. As an example, the size of the building or supporting structure, the size and arrangement of piping and wiring, the specification for associated equipment, the necessary controls, and the service requirements will have to be reconsidered by CONTRACTOR. CONTRACTOR shall be completely responsible for the necessary redesign of all facilities affected by the substitution, and shall prepare the revisions to the Drawings required by such substitution. CONTRACTOR shall be responsible for all fit-up and modifications to support system (piping, electrical, structural, architectural, etc.)

costs associated with substitution of an "or equal" for a specified product, material, or equipment. These revisions shall be submitted to the ENGINEER for approval, in accordance with the provisions in Section 01300, including the specific notice as to the details in which the substitute design differs from the requirements of the Contract Documents. All such redesign and all new drawings and detailing required as a result thereof shall be prepared by CONTRACTOR at CONTRACTOR'S own expense. Requests for additional payment for such substitution will not be considered unless made a part of the final request for approval of the substitution itself.

2.2 MATERIALS

A. All materials, including those not specifically described or specified, but required for a complete and proper installation of work shall be new, first quality of their respective kinds, and subject to the approval of the ENGINEER.

B. All materials shall be in accordance with details and samples as specified in the referencing Section; and submitted and approved in accordance with Section 01300.

2.3 INTERCHANGEABILITY

A. All products of the same size and type and performing the same function shall be, insofar as practical, the products of one manufacturer.
   1. Details in the Drawing submissions of the several equipment manufacturers shall be coordinated so that items such as lubricating fittings, for example, are identical on all equipment items requiring the same grade of lubricant.

PART 3 EXECUTION

3.1 EXISTING CONDITIONS

A. Inspection:
   1. Prior to any Work on a specific equipment unit, CONTRACTOR shall carefully inspect the existing and previously installed Work, and verify that all Work is in such a condition that the installation of new Work may properly commence and be carried out to a proper and timely completion.
   2. CONTRACTOR shall verify that each item of Work shall be installed in accordance with all pertinent codes and regulations, the approved design, and the referenced standards.

B. Discrepancies:
   1. In the event of discrepancies, CONTRACTOR shall immediately notify the ENGINEER, in writing, of such conditions.
   2. CONTRACTOR shall not proceed with installation in areas of discrepancy until such discrepancies have been corrected in a manner acceptable to the ENGINEER.
   3. For any unexpected features arising during the progress of Work and not fully covered herein, the Specifications shall be interpreted by the ENGINEER to require first-class workmanship and materials; and such interpretation shall be accepted by CONTRACTOR.

3.2 INSTALLATION

A. CONTRACTOR shall complete each item in strict accordance with the manufacturer's instructions, unless specifically directed otherwise by the ENGINEER. CONTRACTOR shall not void the manufacturer's guarantee.

B. In the event of discrepancies between the Contract Documents and the material manufacturer's formal installation instructions, as submitted for the actual units supplied; CONTRACTOR shall notify the ENGINEER, in writing, of such discrepancies. CONTRACTOR shall obtain the material manufacturer's approval in writing, of any changes required to suit the project conditions, and so advise the ENGINEER.

C. Products and material shall be secured in place with positive anchorage devices designed and sized to withstand stresses, vibration, physical distortion, or disfigurement.

D. During freezing or inclement weather, or other adverse conditions, no Work shall be performed except that which can be performed in a manner, which will ensure the highest quality construction throughout, meeting the satisfaction of the Engineer and the requirements of these Specifications and NYSDOT 2016 Standard Specifications (Effective September 1, 2016).

END OF SECTION

SECTION 01600

PRODUCT REQUIREMENTS

PART 1 GENERAL

1.1 SECTION INCLUDES

A. Products.

B. Transportation and handling.

C. Storage and protection.

D. Operation and maintenance data.

E. Warranties.

1.2 PRODUCTS

A. Products: Means new material, machinery, components, equipment, fixtures, and systems forming the Work. Does not include machinery and equipment used for preparation, fabrication, conveying and erection of the Work. Products may also include existing materials or components required for reuse.

B. Provide interchangeable components of the same manufacturer, for similar components.

1.3 TRANSPORTATION AND HANDLING

A. Coordinate logistics for the delivery, scheduling, and receipt of materials and equipment to the Site with ENGINEER. Notify ENGINEER of major deliveries or other movements that might cause traffic or unloading blockages that could affect other elements of the Work.

B. Maintain inventory control of material and equipment received at the Site. All material and equipment shall be stored in an orderly and organized manner in the designated areas.

C. Transport and handle products in accordance with manufacturers' instructions.

D. Promptly inspect shipments to assure that products comply with requirements, quantities are correct, and products are undamaged.

E. Provide equipment and personnel to handle products by methods to prevent soiling, disfigurement, or damage.

F. If necessary to move stored materials and equipment during construction, the Contractor shall move materials and equipment without any additional compensation.

1.4 STORAGE AND PROTECTION

A. CONTRACTOR shall be responsible for proper unloading, inspection, and storage of all equipment and material items delivered to the job site for its work.

B. CONTRACTOR shall be responsible for security of equipment, materials, and products stored on site.

C. Store equipment and piping in the designated clean equipment storage area.

D. Store and protect products in accordance with manufacturers' instructions, with seals and labels intact and legible. Store sensitive products in weather-tight, climate controlled enclosures.

E. For exterior storage of fabricated products, place on sloped supports, above ground.

F. Cover products subject to deterioration with impervious sheet covering. Provide ventilation to avoid condensation.

G. Store loose granular materials on solid flat surfaces in a well-drained area. Avoid mixing with foreign matter.

H. Provide equipment and personnel to store products by methods to prevent soiling, disfigurement, or damage.

I. Arrange storage of products to permit access for inspection. Periodically inspect to assure products are undamaged and are maintained under specified conditions.

J. CONTRACTOR will replace at its sole expense all CONTRACTOR-furnished and CONTRACTOR-accepted materials damaged during unloading and storage damaged by weather, damaged by vandalism or other related causes.

K. Mold Prevention: Take precautions in delivery, handling, and storage of **MOLD GROWTH PRODUCTS** to keep them dry until time of installation.
   1. Products proposed for mold protection shall be submitted to Engineer for approval in accordance with Section 01300.
   2. Only install clean and dry **MOLD GROWTH PRODUCTS.**
   3. Remove wet or dirty **MOLD GROWTH PRODUCTS** from project site.

1.5 OPERATION AND MAINTENANCE DATA

A. Provide operating and instruction manuals and warranty and service information from all product, materials, and equipment manufacturers to the ENGINEER upon completion of the Work per Section 01720 Operation and Maintenance Data.

B. Operating Procedures: Include start-up, break-in, and routine normal operating instructions and sequences. Include regulation, control, stopping, shut-down, and emergency instruction. Include summer, winter, and any special operating instruction.

C. Maintenance Requirements: Include routine procedures and guide for troubleshooting; disassembly, repair, and reassembly instructions; alignment, adjusting, balancing, and checking instructions.

D. Include manufacturers' printed operation and maintenance instructions, including preventative and routine periodic maintenance and inspection.

E. Provide original manufacturers' parts list, illustrations, assembly drawings, and diagrams required for maintenance.

F. Identify local supplier for spare parts and/or field service.

1.6 WARRANTIES

A. Obtain warranties executed in duplicate by responsible subcontractors, suppliers, and manufacturers, within 10 days after completion of the applicable item or Work. Unless specified otherwise all products and materials shall be warranted for 12 months after installation and start-up or 18 months after substantial completion, whichever comes first. CONTRACTOR is responsible for coordinating equipment procurement to insure all equipment warranties will be in effect 12 months after system start-up.

1.7 PRODUCT IDENTIFICATIONS

A. Nameplates, Trademarks, Logos, and Other Identifying Marks on Products: Not allowed on surfaces exposed to view in public areas.
   1. Plumbing, mechanical, and electrical equipment not exposed to public view and required testing laboratory labels (such as UL, FM, or WH) are excluded from foregoing limitation.

PART 2 PRODUCTS (NOT USED)

PART 3 EXECUTION (NOT USED)

END OF SECTION

SECTION 01700

CONTRACT CLOSEOUT

PART 1 GENERAL

1.1 DESCRIPTION OF WORK

A. Clean-Up
1. Upon completion of the Work and before a Certificate of Substantial Completion is issued by ENGINEER to CONTRACTOR, the Work site, storage areas, and other areas occupied by CONTRACTOR during construction shall be cleaned, and all surplus and discarded materials, false Work, and rubbish placed thereon by CONTRACTOR shall be removed by CONTRACTOR. No separate payment will be made for clean-up as all such costs shall be included in the Bid.

1.2 ITEMS TO BE COMPLETED

A. As construction of the project enters the final stages of completion, the CONTRACTOR shall, in concert with accomplishing the requirements set forth in the Contract Documents, attend to or have already completed the following items as they apply to the Contract:
1. Scheduling equipment manufacturers' visits to site.
2. Required testing of project components.
3. Scheduling start-up and initial operation.
4. Scheduling and furnishing skilled personnel during initial operation.
5. Correcting or replacing defective work, including completion of items previously overlooked or work which remains incomplete, all as evidenced by the ENGINEER's "Punch" Lists.
6. Attend to any other items listed herein or brought to the CONTRACTOR's attention by the ENGINEER.

B. CONTRACTOR provided closeout submittals include, but are not necessarily limited to:
1. Manufacturer's Certificate of Inspection, CONTRACTOR's Verification of Equipment Inspection, and CONTRACTOR's Equipment Guarantee for each item of equipment installed.
2. Warranties and bonds.
3. Evidence of compliance with requirements of governmental agencies having jurisdiction including, but not necessarily limited to:
   a. Certificates of Inspection.
   b. Certificates of Occupancy.
4. Certificates of Insurance for products and completed operations.
5. Evidence of payment and release of liens.
6. As-Built Drawings/Project Record Documentation.
7. List of subcontractors, service organizations, and principal vendors, including names, addresses, and telephone numbers where they can be reached for emergency service at all times including nights, weekends, and holidays.

C. As-Built Drawings/Project Record Documentation
1. Upon Completion of the Work and before a Certificate of Substantial Completion is issued by ENGINEER to CONTRACTOR, a complete set of "as-built" red-line markup contract Drawings shall be submitted to ENGINEER.

2. Project record documents include, but are not limited to, the following:
   a. Red-line markup of Contract Drawings,
   b. Addenda,
   c. Change Orders, field orders, and other modifications to the Contract,
   d. Approved Shop Drawings,
   e. Product data and samples,
   f. "As-built" documentation, and,
   g. Other approved documents submitted by CONTRACTOR in compliance with these Specifications.
3. Maintain at the Site, one set of the following record documents; record actual revisions to the Work.
   a. Drawings,
   b. Addenda,
   c. Change Orders and other Modifications to the Contract, and,
   d. Reviewed Drawings, product data, and samples.
4. Store Record Documents separately from documents used for construction.
5. Record information concurrent with construction progress.
6. Specifications: Legibly mark and record at each product section description of actual products installed, including the following:
   a. Manufacturer's name and product model and number,
   b. Product substitutions or alternates utilized, and
   c. Changes made by addenda and modifications.
7. Record Documents and Drawings: Legibly mark each item to record actual construction including:
   a. Field changes of dimension and detail, and
   b. Details not on original Drawings.
8. Submit documents to ENGINEER with claim for final Application of Payment.

D. Before the ENGINEER's Certificate of Substantial Completion will be issued, the CONTRACTOR shall accomplish the cleaning and final adjustment of the various building components as specified in the Specifications and as follows:
   1. Adjust all doors for proper operation.
   2. Clean all finish hardware after adjustment for proper operation.
   3. Touch up marks or defects in painted surfaces and touch up any similar defects in factory finished surfaces.
   4. Wax all resilient flooring materials.
   5. Remove bitumen from gravel stops, fascias, and other exposed surfaces.
   6. Remove all stains, marks, fingerprints, soil, spots and blemishes from all finished surfaces, tile, stone, brick and similar surfaces.

E. In addition, and before the Certificate of Substantial Completion will be issued, the CONTRACTOR shall submit to the ENGINEER certain records, certifications, etc., which are specified elsewhere in the Contract Documents. A partial list of such items appears below, but it shall be the CONTRACTOR's responsibility to submit all items which are required by the Contract Documents:
   1. Test results of project components.
   2. Performance Affidavits for equipment.
   3. Certification of equipment or materials in compliance with Contract Documents.
   4. Operation and maintenance instructions or manuals for equipment.
   5. One set of neatly marked-up record drawings showing as-built changes and additions to the work under his Contract.
   6. Any special guarantees or bonds.

1.3 SPECIAL TOOLS AND APPLIANCES

A. Special tools and appliances which may be needed to adjust, operate, maintain or repair the equipment furnished under this Contract shall be provided in accordance with the Detailed Specifications.

B. The CONTRACTOR shall submit a complete list of special tools and appliances to be furnished, for approval by the ENGINEER, as a part of the working drawing submittal.

C. Special tools and appliances shall be furnished in approved painted steel cases, properly labeled and equipped with good grade cylinder locks and duplicate keys.

1.4 LUBRICANTS

A. The CONTRACTOR shall furnish and deliver to the ENGINEER such oil, grease and any special lubricants that are necessary for proper operation of all equipment furnished under this Contract. Identification and listing of such lubricants shall be made as part of the working drawing submittal. The quantity furnished shall be sufficient for equipment start-up, operation prior to final acceptance of the work, and for operation during the guaranty period. The grade of lubricants furnished shall be in accordance with the recommendations of the equipment manufacturers made on the approved equipment working drawings.

1.5 PIPING AND EQUIPMENT IDENTIFICATION

A. The CONTRACTOR shall furnish and install identification signs for all equipment, control panels, valves and piping identification in accordance with the Detailed Specifications.

1.6 WARRANTIES AND GUARANTEES

A. Upon completion of the Work and before a Certificate of Substantial Completion is issued by ENGINEER to CONTRACTOR, all Warranties and Guarantees shall be submitted to ENGINEER. Warranties and Guarantees shall be submitted per the requirements in Section 01750 Guarantees and Warranties.

1.7 CLOSEOUT PROCEDURES

A. When CONTRACTOR considers that the Work is substantially complete, CONTRACTOR shall submit written certification that Contract Documents have been reviewed, Work has been inspected, and that Work is complete in accordance with the Contract Documents and is ready for ENGINEER's final inspection.

B. CONTRACTOR shall provide to the ENGINEER "as-built" Drawings, all submittals in accordance with Section 01300, warranties, and other submittals required by these Specifications or governing authorities. CONTRACTOR shall provide all printed and bound information in triplicate, along with an electronic copy of all information saved to a CD.

C. ENGINEER shall, within a reasonable time after receipt of written certification from CONTRACTOR, conduct an inspection to determine status of completion. If ENGINEER determines that the Work is not complete, ENGINEER shall notify CONTRACTOR in writing giving the reasons thereof. The CONTRACTOR shall remedy the deficiencies noted and submit certification to ENGINEER for re-inspection.

D. The CONTRACTOR shall submit Project Record Documents to ENGINEER with a request

for Final Application for Payment.

E. Evidence of payment and release of liens shall be in accordance with the requirements provided in the Contract Documents.

PART 2 PRODUCTS (NOT USED)

PART 3 EXECUTION (NOT USED)

END OF SECTION

SECTION 01701

EQUIPMENT AND SYSTEM STARTUP TESTING

PART 1 GENERAL

1.1 DESCRIPTION OF WORK

A. This section provides the requirements and procedures for all Equipment and System testing that must be performed on system components and integrated system components.

B. The Contractor shall furnish temporary power or other temporary services as specified elsewhere in this project manual for the purpose of testing equipment furnished as part of the Work.

C. The ENGINEER or entity witnessing the tests must approve and signoff on completion of tests. If in his/her estimation, the test was unsuccessful and did not meet either the procedure/protocol requirements or performance requirements of the contract, the Contractor must correct deficiencies and reschedule the test.

D. Testing shall consist of two primary categories: Equipment Tests and System Startup Tests.

1. Equipment Tests are defined as those tests required to demonstrate that individual piece of equipment or subsystem meets the functional and performance requirements.
2. Equipment Tests are further subdivided into two tests: Witnessed Functional Checkout and Witnessed Performance Tests. These two tests shall be performed for all equipment and systems listed in the following table. Special testing requirements as listed in any section of the project manual shall be followed.

Type of Equipment
Pumps
Air Strippers
Blowers
Carbon Vessels
Unit Heaters
Air Conditioners
Louvers
Fans
Radio Network
Primary Sensors and Field Instruments
Motors
Process Piping Hangers and Supports
Variable Frequency Drives

3. System Tests are defined as overall integrated tests at the conclusion of all equipment testing. These tests serve the purpose to confirm that the entire system as a whole meets design function and performance requirements. Minimum requirements for these tests are defined herein.

E. Equipment Test #1: Witnessed Functional Checkout Tests

1. The purpose of this phase is to demonstrate that all of the equipment and systems when energized will perform the functions required by the Contract Documents, the approved Shop Drawings, and the approved Operation and Maintenance Manuals for each item of equipment or system.
2. Contractor can perform as many unwitnessed tests necessary to debug, verify and confirm functionality of equipment prior to the witnessed functional checkout test. All pre-requisites shall be met and all unwitnessed testing shall be coordinated with onsite inspection personnel and the ENGINEER.

F. Equipment Test #2: Witnessed Performance Tests

1. The purpose of this test is to verify performance of the individual components under actual and simulated operating conditions. The tests shall demonstrate compliance with the performance requirements in the individual equipment specification sections.

G. System Startup Tests:

1. The purpose of these tests is to verify performance of the integrated system under actual operating conditions. Successful completion of these tests shall indicate compliance with the system performance requirements of the contract. Contract completion and closeout will be based on other factors identified in the Contract.

1.2 QUALITY ASSURANCE

A. When local codes or laws require approval and inspection of the work by other agencies or organizations before installation or operation, such approval or inspections shall be obtained prior to performing those tests.

B. All inspections and tests shall be in accordance with the latest edition of the applicable test procedures of the following standards and associations; and in accordance with other standards and associations which may be identified in other sections of these specifications.

1. ANSI – American National Standards Institute
2. ASME – American Society of Mechanical Engineers
3. AWWA – American Water Works Association
4. HIS – Hydraulic Institute Standards
5. IEEE – Institute of Electric and Electronic Engineers
6. ICEA – Insulated Cable Engineers Association
7. NEC – National Electrical Code
8. NEMA – National Electrical Manufacturer's Association

1.3 SUBMITTALS

A. Submit data and certificates in accordance with Section 01300 – Submittals, and as specified herein.

B. Equipment Test procedures: Submit at least (3) three weeks prior to any testing and no testing shall commence until approved. Submittals shall conform to 01300 and other requirements as identified in the individual equipment section.

C. System Startup Testing Protocol: Submit to the OWNER and ENGINEER at least 6 weeks prior to any system tests. Testing shall not begin until the PM has approved the testing protocol or has provided comments to the Contractor. The test protocol shall list all documentation that will be required for and provided in anticipation of system tests.

D. Testing results. All test results shall be documented and signed by appropriate parties. All results shall be submitted in accordance with Section 01300 Submittals. Testing documents shall be submitted in the following sets:

1. Equipment Tests – One final compiled test results submittal for each equipment test.

2. System Tests – One test result for each system test performed.

3. All test results shall be accompanied by a front page certificate which shall state the test, purpose, date/time range, and overall result and shall be signed by all parties. Testing documentation shall be attached to this certificate.

PART 2 PRODUCTS

2.1 TESTING MATERIALS

A. All test equipment necessary, including instruments and auxiliary equipment, shall be provided by the Contractor and, where required, by the manufacturer's field service personnel.

B. All test equipment must have demonstrated calibration certificate or tag confirming calibration within 6 months from date of tests.

C. The Contractor shall provide all sampling equipment as required.

D. The Contractor shall provide all materials, fluids, chemicals, other materials, and operating personnel required through start-up testing.

PART 3 EXECUTION

3.1 PREREQUISITES TO BE PROVIDED BY CONTRACTOR:

A. Equipment Tests
1. Agency approvals.
2. Prerequisites and preliminary tests as called for in individual equipment specifications have been completed.
3. Factory test reports have been received and approved.
4. Installation reports have been received and approved.
5. Calibration certifications/sheets for all instruments.
6. Operations and Maintenance Manuals in accordance with 01720 and individual specification section O&M requirements.
7. Approved Equipment Test procedures
8. Un-witnessed functional test to confirm proper operation prior to performing witnessed test.

9. Where applicable:
    a. No visible corrosion or mechanical damage where applicable.
    b. Nameplates, labels and tags are correct and visible.
    c. Mountings, supports and installed accessories are secure.
    d. Power has been tested, motor bumps, valves stroked, auxiliary systems (seal, cooling, lubrication, feed/drain lines) are functional and able to fully support test procedures.

B. System Startup Tests:
    1. Completed Equipment Tests with associated signed Test Certificate and Results. Test certificate and results must be submitted and approved prior to commencing startup tests.
    2. Approved System Startup Test Procotol
    3. All requirements identified in the test protocol have been met.
    4. Pre-Test meeting: This meeting is a requirement for all system tests. All parties will meet to discuss approach and protocol to the specific system test and confirm all details. No system tests shall be performed without a Pre-Test meeting.

3.2 SPECIFIC PRE-REQUISITES FOR SYSTEM STARTUP TESTS:

A. For all system tests, air make up line must be installed and operational to provide supply of air for system startup tests as outlined below.

B. For all equipment included in a system startup test, operator training must be completed.

3.3 EQUIPMENT TESTS:

A. Confirm pre-requisites are met.

B. Follow approved procedure.

C. Submit documented results and test certificate.

3.4 SYSTEM STARTUP TESTS:

A. Confirm pre-requisites are met.

B. Follow approved procedure.

C. Submit documented results and test certificate.

D. Perform, at minimum, the tests listed below. All system tests must have the following minimum components completely tested as defined above and ready to operate.
    1. Pumps
    2. Motors
    3. Instrumentation
    4. Blowers
    5. Air Strippers

E. Final Inspection:

1. After signed certified documentation of Completed Witnessed System Startup Tests have been issued and received, a written request for a final inspection of the system shall be made.

END OF SECTION

SECTION 01720

OPERATION AND MAINTENANCE DATA

PART 1 GENERAL

1.1 SECTION INCLUDES

A. Format and content of manuals.

B. Schedule of submittals.

1.2 RELATED SECTIONS

A. Section 01300 - Submittals

B. Section 01400 - Quality Requirements

C. Section 01600 - Product Requirements

D. Section 01700 - Contract Closeout

E. Individual Specifications Sections: Specific requirements for operation and maintenance data.

1.3 QUALITY ASSURANCE

A. Prepare instructions and data by personnel experienced in maintenance and operation of described products.

1.4 FORMAT

A. Prepare data in the form of an instructional manual. Include an electronic copy of all materials copied to a CD.

B. Bind instruction manuals for each piece of equipment and instrumentation in a commercial quality, 8-1/2 x 11 inch three-ring binder with a hardback, cleanable, plastic cover. When multiple binders are used, correlate data into related, consistent groupings.

C. Identify each binder with typed or printed title OPERATION AND MAINTENANCE INSTRUCTIONS. Include the title of Project and subject matter of contents.

D. Arrange content by systems under section numbers and sequence of Table of Contents of this Project Manual.

E. Provide tabbed flyleaf for each separate product and system, with typed description of product and major component parts of equipment.

F. Include manufacturer's printed data.

G. Bind Drawings in with text and fold larger Drawings to size of text pages and insert into map pockets in the manual.

1.5 CONTENTS, EACH VOLUME

A. Table of Contents: Provide title of Project, names, addresses, and telephone numbers of ENGINEER and CONTRACTOR with name of responsible parties, and schedule of products and systems indexed to content of the volume.

B. For Each Product or System: List names, addresses and telephone numbers of Subcontractors and suppliers, including local source of supplies and replacement parts.

C. Product Data: Mark each sheet to clearly identify specific products and component parts, and data applicable to installation. Delete inapplicable information.

D. Drawings: Supplement product data to illustrate relations of component parts of equipment and systems, to show control and flow diagrams. A 3-D expanded parts plan should be provided.

E. Provide logical sequence of instructions for each procedure, incorporating manufacturer's instructions, where applicable.

F. Include product guarantees, where applicable.

1.6 MANUAL FOR MATERIALS AND FINISHES

A. Building Products, Applied Materials, and Finishes: Include product data, with catalog number, size, composition, and color and texture designations. Provide information for re-ordering custom manufactured products.

B. Instructions for Care and Maintenance: Include manufacturer's recommendations for cleaning agents and methods, precautions against detrimental agents and methods, and recommended schedule for cleaning and maintenance.

C. Moisture Protection and Weather Exposed Products: Include product data listing applicable reference standards, chemical composition, and details of installation. Provide recommendations for inspections, maintenance, and repair.

D. Additional Requirements: As specified in individual product specification Sections.

1.7 MANUAL FOR EQUIPMENT AND SYSTEMS

A. Each Item of Equipment and Each System: Include description of unit or system, and component parts. Identify function, normal operating characteristics, and limiting conditions. Include performance curves, with engineering data and tests, and complete nomenclature and commercial number of replaceable parts.

B. Panelboard Circuit Directories: Provide electrical service characteristics, controls and communications.

C. Include color coded wiring diagrams as installed.

D. Operating Procedures: Include start-up, break-in, and routine normal operating instructions and sequences. Include regulation, control, stopping, shut-down, and emergency instructions. Include summer, winter, and any special operating instructions.

E. Maintenance Requirements: Include routine procedures and guide for trouble-shooting; disassembly, repair, and reassembly instructions; and alignment, adjusting, balancing, and checking instructions.

F. Provide servicing and lubrication schedule, and list of lubricants required.

G. Include manufacturer's printed operation and maintenance instructions.

H. Include sequence of operation by controls manufacturer.

I. Provide original manufacturer's parts list, illustrations, assembly drawings, and diagrams required for maintenance.

J. Provide control diagrams by controls manufacturer as installed.

K. Provide Contractor's coordination drawings, with color coded piping diagrams as installed.

L. Provide charts of valve tag numbers, with location and function of each valve, keyed to flow and control diagrams. Identify valve position as normally open or normally closed.

M. Provide list of original manufacturer's spare parts, current prices, and recommended quantities to be maintained in storage.

N. Include test and balancing reports where applicable.

O. Additional Requirements: As specified in individual product specification Sections.

1.8 INSTRUCTION OF ENGINEER PERSONNEL

A. Before final inspection, coordinate instruction of ENGINEER's designated personnel by manufacturer's technical representatives in operation, adjustment, and maintenance of products, equipment, and systems, at agreed upon times.

B. For equipment requiring seasonal operation, perform instructions for other seasons within six months.

C. Use operation and maintenance manuals as basis for instruction. Review contents of manual with personnel in detail to explain all aspects of operation and maintenance.

D. Prepare and insert additional data in Operation and Maintenance Manual when need for such data becomes apparent during instruction.

1.9 SUBMITTALS

A. Submit two copies of preliminary draft or proposed formats and outlines of contents before start of Work. ENGINEER will review draft and return one copy with comments.

B. For equipment, or component parts of equipment put into service during construction and operated by ENGINEER, submit documents within 10 days after acceptance.

C. Submit one copy of completed volumes in final form 15 days prior to final inspection. Copy will be returned after final inspection, with ENGINEER comments. Revise content of documents as required prior to final submittal.

D. Submit four copies of revised volumes of data in final form within 10 days after final inspection.

1.10 SCHEDULE OF SUBMITTALS

A. In accordance with Section 01300.

PART 2 PRODUCTS (NOT USED)

PART 3 EXECUTION (NOT USED)

END OF SECTION

SECTION 01730

PROTECTING INSTALLED CONSTRUCTION

PART 1 GENERAL

1.1 SECTION INCLUDES

A. Protection of Installed Construction

1.2 RELATED SECTIONS

A. Section 01740 - Cleaning

1.3 GENERAL REQUIREMENTS

A. Protection:
1. During handling and installation, protect construction in progress and adjoining materials in place.
2. Apply protective covering where required to ensure protection from damage or deterioration until Owner occupancy.
3. Inspect weekly and maintain completed construction as frequently as necessary through the remainder of the construction period under provisions of Section 01740 - Cleaning.
4. Adjust and lubricate operable components to ensure operability without damaging effects.
5. It is absolutely mandatory that the CONTRACTOR protect all building equipment inside and outside from damage.

PART 2 PRODUCTS (NOT USED)

PART 3 EXECUTION

3.1 PROTECTION OF INSTALLED WORK

A. Protect installed Work and provide special protection where specified in respective Sections of Divisions 1 through 16.

B. Provide temporary and removable protection for installed products.

C. Control traffic in immediate area of installed Work to minimize damage.

D. Provide protective coverings at walls, projections, jambs, sills, and soffits of openings.

E. Protect finished surfaces (i.e., grass, concrete, pavers, and asphalt), stairs and other finished surfaces with durable sheet materials to protect from traffic, dirt, wear, damage, or movement of heavy objects.

F. Prohibit traffic and storage on waterproofed or roofed surfaces. If traffic or activity on such surfaces is necessary, obtain recommendation from waterproofing or roofing manufacturer and provide protection accordingly.

G. Prohibit traffic on lawn and landscaped areas.

H. Prohibit wheeled or tracked vehicles on surfaces or areas not designed for their support or which shall be otherwise damaged.

END OF SECTION

SECTION 01732

CUTTING AND PATCHING

PART 1 GENERAL

1.1 SUMMARY

A. Section includes incidental cutting, fitting, and patching within new construction required to complete work or to make its several parts fit together.

B. Related Sections:
   1. Section 01736 - Selective Demolition: Alterations to existing construction.

1.2 SUBMITTALS

A. Submit written request to perform cutting and patching two weeks in advance of cutting or alteration which affects:
   1. Structural value or integrity of any element of Project.
   2. Integrity or effectiveness of weather exposed or moisture resistant elements or systems.
   3. Efficiency, operation, maintenance, or safety of operational equipment.
   4. Do not proceed with Cutting and Patching without written approval.

B. Include in request:
   1. Description of proposed Work:
      a. Extent of cutting, fitting, patching, or alteration.
      b. Listing of applicable trades.
      c. Proposed products and materials.
      d. Extent of refinishing.
   2. Effect on utilities:
      a. List utilities affected by cutting and patching.
      b. List utilities that will be relocated.
      c. List utilities that will be temporarily out-of-service. Indicate time period of service outage.
   3. Date and time of execution.

C. Should conditions or schedule require change of products or methods different than original installation, submit written recommendation explaining conditions necessitating change and requirements of alternative materials or methods.

PART 2 PRODUCTS

2.1 MATERIALS

A. Primary Products and Materials: Those required for original installation; comply with Specifications for each specific product involved.

PART 3 EXECUTION

3.1 PREPARATION

A. Provide temporary supports to ensure structural integrity of affected portions of Work.
   1. Provide devices and methods to protect other portions of Project from damage.
   2. Provide protection from elements for areas which may be exposed by uncovering work; maintain excavations free of water.

B. Apply water to demolished materials or pre-wet materials to be demolished to prevent dust transport onto adjacent properties and roadways. Prevent water used for dust control from entering any storm drainage facility, or watercourse.

C. Avoid interference with use of adjoining areas or interruption of free passage to adjoining areas.

D. Avoid cutting in service pipes, ducts, or conduit until provisions have been made to bypass them.

3.2 PERFORMANCE

A. Cutting and Patching: Cut into construction to provide for installation of other Work and subsequent fitting and patching required to restore surface to original condition and satisfaction in all respects to Engineer.

B. Cut, fit and patch, including excavation and backfill, to complete Work and also to:
   1. Fit several parts together, to integrate with other work.
   2. Uncover portions of work to provide for installation of ill-timed work.
   3. Remove and replace defective work.
   4. Remove and replace work not conforming to requirements of Contract Documents.
   5. Remove samples of installed work as necessary for testing.
   6. Provide openings in elements of work for penetrations of plumbing, mechanical, and electrical work.
   7. Uncover work to allow for Architect's observation of covered work which has been covered up prior to required observation by Engineer.

C. Cutting and Patching: Execute in manner which does not void required or existing warranties.
   1. Execute by methods which will prevent damage to other Work and which will produce appropriate surfaces to receive installation of new Work:
      a. Use hand or small power tools designed for sawing or grinding, not hammering or chopping.
      b. Cut holes and slots as small as possible, neatly to size required, with minimum disturbance of adjacent surfaces.
      c. To avoid marring existing finished surfaces, cut or drill from exposed or finished side into concealed surfaces.
      d. Cut through concrete and masonry using cutting machine, such as Carborundum saw or diamond-core drill.
   2. Execute excavating and backfilling by methods which will prevent settlement or damage.
   3. Execute fitting and adjustment to produce finished installation complying with specified products, functions, tolerances, and finishes.
   4. Cut rigid materials using masonry saw or core drill. Pneumatic tools not allowed without prior approval of Engineer.

5. Do not cut and patch structural elements in manner that would result in reduction of load carrying capacity or of load deflection ratio.

D. Utilities and Penetrations: Fit work tight to pipes, sleeves, ducts, conduit, and other penetrations through surfaces.
   1. At penetrations of fire rated assemblies, completely seal with firestops. Coordinate and pay all costs associated with firestop inspections by local agencies.
   2. Where utilities are to be removed, relocated, or abandoned, by-pass before cutting. Cut-off pipe or conduit in walls or partitions to be removed. Cap, valve, or plug and seal the remaining portion of pipe, duct, or conduit to prevent entrance of moisture or matter after by-passing and cutting.

E. Restoration: Except where indicated otherwise, restore exposed finishes of patched areas to match existing and where necessary extend finish restoration into retained adjoining surfaces in manner which will eliminate evidence of patching and refinishing. Thoroughly clean surfaces prior to application of paint and other finishes.

3.3 CLEANING

A. Thoroughly clean areas and spaces affected by Work. Completely remove paint, mortar, oils, putty, and items of similar nature.

B. Restore damaged surfaces to their original condition.

END OF SECTION

SECTION 01735

EXECUTION

PART 1 GENERAL

1.1 COMPLIANCE

A. Unless otherwise specified in individual Sections, comply with manufacturer's requirements, including printed instructions and product data sheets, regarding examination and preparation of surfaces to receive Work, protection of surfaces adjacent to Work, and installation, cleaning, adjusting, and protection of Work.

1.2 RELATED WORK

A. Other sections of the specifications, not referenced below, shall also apply to the extent required for proper performance of this work.

B. Section 01046 - Control of Work

C. Section 01140 - Work Restrictions

D. Section 01170 - Special Provisions

E. Section 01400 - Quality Requirements

1.3 EXAMINATION OF CONDITIONS

A. Examine substrates and conditions under which Work is to be performed. Do not commence work over unsatisfactory conditions detrimental to proper and timely execution of Work.
   1. Verify layout of work before beginning installation.
   2. Do not proceed with Work until unsatisfactory conditions have been corrected.
   3. Commencement of installation constitutes acceptance of conditions and cost of any corrective measures are responsibility of Contractor.

B. Existing Conditions: The existence and location of mechanical, electrical, and other construction indicated as existing are not guaranteed. Before beginning work, Contractor shall investigate and verify the existence and location of mechanical and electrical systems and other construction affecting the Work.

C. Acceptance of Conditions: Examine substrates, areas, and conditions, with Installer or Applicator present where indicated, for compliance with requirements for installation tolerances and other conditions affecting performance. Record observations with clearly documented photographs and written descriptions with clearly identifying locations.

D. Complete all installation of equipment, product, and materials without damaging existing equipment, furnishings, residential property or other property. All repairs and replacements will be made at CONTRACTOR'S sole expense with no additional costs to the Owner.

1.4 PREPARATION

A. Field Measurements: Contractor shall take field measurements as required to fit the Work properly. Recheck measurements before fabricating and installing each product. Where portions of the Work are indicated to fit to existing or other construction, verify dimensions of other construction by field measurements before fabrication. Coordinate fabrication schedule with construction progress to avoid delaying the Work. Fabrication and fit-up drawings prepared based on field measurements obtained on-site by Contractor shall be provided to ENGINEER for review as described in Section 01300 – Submittals.

B. Space Requirements: Verify space requirements and dimensions of items shown on Drawings.

C. Review of Contract Documents and Site Conditions: Immediately on discovery of the need for clarification of the Contract Documents, submit a Request for Interpretation to ENGINEER. Include a detailed description of problem encountered, together with recommendations for changing the Contract Documents.

D. Installation of all equipment, products, and materials shall be in compliance with manufacturer's printed installation instructions, including each step in sequence. Do not omit preparatory steps or installation procedures unless specifically modified or exempted by Contract Documents.

1.5 PRODUCT INSTALLATION

A. General: Install, erect, connect, condition, use, adjust, and clean products in accordance with manufacturer's instructions and in conformity with specified requirements.
   1. Verify and coordinate clearances, dimensions and installation of adjoining construction, equipment, piping, ducts, conduits, or other mechanical or electrical items or apparatus.
   2. Prior to fabrication, field measure actual existing conditions to ensure proper fit.
   3. Inspect each item of material or equipment immediately prior to installation. Reject damaged and defective items.
   4. Recheck measurements and dimensions of Work, as an integral step of starting each installation. Whenever stock manufactured products are specified, verify actual space requirements for setting or placing into allotted space. No extra cost will be allowed for adjustment of Work to accommodate installation of a particular product or piece of equipment.

B. Attachment: Provide attachment and connection devices and methods for securing work to withstand stresses, vibration, physical distortion, disfigurement, or racking.
   1. Secure work true to line and level, or sloped as specified, and within specified tolerances, or if not specified, industry recognized tolerances.
   2. Physically separate, provide electrical insulation, or provide protective coatings to prevent galvanic action or corrosion between dissimilar metals.
   3. Exposed Joints: Provide uniform joint width and arrange to obtain best visual effect. Refer questionable visual-effect choices to ENGINEER for final decision.

C. Climatic Conditions and Project Status: Install each unit of work under conditions to ensure best possible results in coordination with entire project.
   1. Isolate each unit of work from incompatible work as necessary to prevent deterioration.
   2. Coordinate enclosure of work with required inspections and tests to minimize necessity of uncovering work for those purposes.

D. Mounting Heights: Where not indicated, mount individual units of work at industry recognized standard mounting heights for particular application indicated.
   1. Refer questionable mounting heights choices to ENGINEER for final decision.

E. Clean and perform maintenance on installed Work as frequently as necessary through remainder of construction period. Lubricate operable components to ensure operability without damaging effects.

F. Adjust operating products and equipment to ensure smooth and unhindered operation.

1.6 MANUFACTURER'S INSTRUCTIONS

A. Compliance: Comply with manufacturer's printed installation instructions, including each step in sequence. Do not omit preparatory steps or installation procedures unless specifically modified or exempted by Contract Documents.
   1. Maintain one set of instructions at Project site during installation and until completion.
   2. Should Project conditions or specified requirements conflict with manufacturer's instructions, request clarification in writing from ENGINEER before proceeding.

1.7 PROTECTION OF INSTALLED WORK

A. Provide final protection and maintain conditions that ensure installed Work is without damage or deterioration at time of Substantial Completion.

B. Comply with manufacturer's written instructions for temperature and relative humidity.

C. Protect installed Work in manner to prevent damage from subsequent construction operations.

D. Mold Prevention: Provide protection to keep **MOLD GROWTH PRODUCTS** dry during construction operations until time of Substantial Completion.

1.8 CORRECTION OF THE WORK

A. Repair or remove and replace defective construction. Restore damaged substrates and finishes. Repairing includes replacing defective parts, equipment, products, and materials; refinishing damaged surfaces, touching up with matching materials, and properly adjusting operating equipment.

B. Restore permanent facilities used during construction to their specified condition.

C. Remove and replace damaged surfaces that are exposed to view if surfaces cannot be repaired without visible evidence of repair.

D. Repair components that do not operate properly. Remove and replace operating components that cannot be repaired.

E. Remove and replace chipped, scratched, and broken glass or reflective surfaces.

END OF SECTION

SECTION 01736

SELECTIVE DEMOLITION

PART 1 GENERAL

1.1 SUMMARY

A. Section Includes:
   1. Selective removal of ground surfaces such as grass, concrete sidewalks, asphalt driveways, topsoil, soil and other material to accommodate the drilling for well installation, trenching for piping installation, and treatment building construction.
   2. Disconnecting and capping or removal of identified utilities. Refer to Drawing XX.
   3. Design and installation of shoring, bracing, pinning, and related support systems to prevent structural damage, shifting, or collapse.
   4. Work shall be performed in compliance with the approved Construction Staging and Sequencing Plan.

B. Related Sections:
   1. Section 01732 - Cutting and Patching.

1.2 SUBMITTALS

A. General: Submit in accordance with Section 01300.

B. Schedules: Submit schedule showing time and detailed sequence of demolition, removal of materials, arranged coordination for shut-off, capping, and continuation of utility services.
   1. Schedule selective demolition and removal work to ensure uninterrupted activities of adjacent Residents and Residential Property Owner's.

C. Informational Submittals:
   1. Shop Drawings: Show location and construction of temporary partitions, access routes on site, barricades, and temporary work.
   2. Provide details of dust and noise control protection.

D. Project Record Documents:
   1. Accurately record actual locations of capped utilities.

1.3 QUALITY ASSURANCE

A. Contractor Qualifications: Company specializing in demolition work with minimum of three years documented experience.

B. Regulatory Requirements: Comply with applicable codes, ordinances, rules, regulations, and laws of local, municipal, state and federal authorities having jurisdiction.
   1. Obtain and pay for necessary permits and notices; post where required.
   2. Comply with safety requirements of local fire department.

C. Notify affected utility companies before starting work and comply with their requirements.

D. Do not close or obstruct egress width of fire exits or access.

1.4 PRE-DEMOLITION CONFERENCE

A. Conduct conference to discuss following:
   1. Present draft of demolition schedule for review.
   2. Coordinate phasing requirements.
   3. Identify items to be protected and preserved before proceeding with work.
   4. During walking inspection, photograph or otherwise determine and record existing physical conditions of boundary areas. Surfaces, equipment, or other items damaged during demolition work are to be restored to original condition as recorded during walking inspection.
   5. Obtain agreement from Town of Oyster Bay or Nassau County (where applicable) on day-to-day scheduling requirements and restrictions to avoid disruption of Residents' operations resulting from demolition work, dirt, dust, or noise.

1.5 PROJECT CONDITIONS

A. Occupancy:
   1. Residents will continuously occupy houses immediately adjacent to selective demolition areas.
   2. Conduct selective demolition work in manner that will minimize need for disruption of Residents' normal operations.
   3. Provide minimum of 72 hours advanced notice to Residents of demolition activities which will severely impact Residents' normal operations.
   4. Maintain free and safe passage to and from Residential Houses.

B. Condition of Structures: Owner assumes no responsibility for actual condition of areas to be demolished.

C. Hazardous Materials: Inform Engineer and Owner immediately upon discovery of asbestos products, radioactive materials, radon gas, toxic wastes, lead based paints, or other similar hazardous materials.
   1. Strictly follow procedures and regulations applicable to hazardous materials.
   2. Do not remove hazardous materials without Owner authorization.
   3. Give special consideration to handling of material that may contain asbestos. Neither asbestos detection nor removal is part of this Contract, and direction relating to that type of work will be given by the Owner.
   4. Architect will have no responsibility for detection, evaluation, or removal of asbestos or other hazardous materials, or for construction contract administration of removal process.

D. Explosives: Not allowed.

E. Traffic and Passageways: Maintain accessibility for firefighting apparatus.
   1. Conduct demolition operations and debris removal to avoid interference with use of roads, streets, walks, and adjacent occupied facilities.
   2. Obtain written permission from authorities having jurisdiction prior to closing or obstructing streets, walks, or other adjacent occupied facilities.
   3. Provide alternate routes when closing or obstructing traffic ways when required by governing authorities.
   4. Ensure safe passage of persons around area of demolition. Provide and maintain temporary covered passageways; comply with requirements of governing authorities.

F. Protection: Perform Work in manner to eliminate hazards to persons or property and avoid interference with adjacent areas, utilities and structures.
   1. Provide and maintain temporary barricades, fences, warning signs, guardrails, warning lights, weatherproof and dust partitions, and other similar provisions as necessary or

required by applicable regulatory authorities for protection of building occupants and workers.
2. Provide and maintain fire extinguishers; comply with requirements of governing authorities.
3. Maintain existing utilities which are to remain in service and protect from damage during demolition operations.
4. Do not interrupt existing utilities serving residential houses and occupied facilities, except when authorized by Utility Company in writing. Provide temporary services during interruptions to existing utilities.
5. Coordinate mechanical, electrical, and plumbing shutdowns in advance with Owner, Residents and Utility Company.
6. Protect existing work indicated to remain from damage.
7. Protect existing floors with suitable coverings when necessary.
8. Where required, construct shoring, bracing, pinning, and other temporary structures to prevent structural damage, shifting, or collapse.
9. Apply water to demolished materials or pre-wet materials to be demolished as necessary to prevent dust transport onto adjacent properties and roadways. Prevent water used for dust control from entering any storm drainage facility, or watercourse.
10. Provide temporary weather protection for areas where existing exterior elements were removed to ensure no water leakage or damage occurs to structure.

1.6 SCHEDULING

A. Schedule work to conform to the approved construction progress schedule.
   1. Schedule work to coincide with new construction.
   2. Describe demolition removal procedures and schedule.

B. Perform work between hours of 7 AM and 5 PM.

PART 2 PRODUCTS (NOT USED)

PART 3 EXECUTION

3.1 PREPARATION

A. Provide, erect, and maintain temporary barriers and security devices.
   1. Protect existing structures which are not being demolished.
   2. Prevent movement or settlement of adjacent structures. Provide bracing and shoring as necessary and be responsible for safety and support of structure. Assume liability for such movement, settlement, damage, or injury.

B. Disconnect Utilities: Mark and identify location of utilities to be disconnected.
   1. Notify affected utility company in advance of date and time when service needs to be disconnected.
   2. Disconnect and Cap Utilities: Where indicated on Drawings, disconnect and cap utility services; comply with requirements of governing authorities.
   3. Disconnect and Remove Utilities: Where indicated on Drawings, disconnect and remove utility services; comply with requirements of governing authorities.
   4. Do not commence demolition operations until associated disconnections have been completed.

3.2 DEMOLITION

A. General: Conduct demolition to minimize interference with adjacent residential houses.

1. Cease demolition operations immediately if adjacent structures appear to be in danger. Conduct safety operations as necessary. Do not resume demolition operations until directed.
2. Conduct operations with minimum interference to public or private accesses. Maintain egress and access at all times.
3. Do not cause flooding or contaminated runoff.

B. Demolish existing construction as indicated in orderly and careful manner to accommodate new work. Protect supporting structural members. Remove demolished materials from site daily and legally dispose of such materials.
   1. Perform demolition in accordance with governing authorities.

C. Report to Engineer and Owner unanticipated mechanical, electrical, or structural elements which conflict with intended function or design when encountered. Submit report in writing. Rearrange demolition schedule as necessary to continue overall project progress without delay.

D. Do not burn or bury materials or debris on site. Leave structures and site in clean condition.

3.3 ADJUSTING

A. Repair demolition performed in excess of that required. Return structures and surfaces to remain to conditions existing prior to commencement of selective demolition Work.

3.4 CLEANING

A. Broom clean demolition areas of dust, dirt, and debris caused by demolition operations. Return adjacent areas to condition existing prior to start of work.

B. Remove temporary work and protection when no longer needed.

END OF SECTION

SECTION 01740

CLEANING

PART 1 GENERAL

1.1 DESCRIPTION OF WORK

A. Perform pressure tests per Specification Section 15200 - Process Pipe and Section 15700 – High Density Polyethylene Pipe.

B. Perform all required cleaning of pipes, both interior and exterior.

C. Obtain ENGINEER and Bethpage Water District approval for sources of water used for flushing and cleaning.

D. Obtain ENGINEER approval for disposal methods of all fluids used for system flushing and cleaning.

E. Conduct cleaning and disposal operations to comply with local ordinances and anti-pollution laws.
   1. Do not burn or bury rubbish and waste materials on Project site.
   2. Do not dispose of volatile wastes or hazardous materials such as mineral spirits, oil, or paint thinner in storm or sanitary drains.
   3. Do not dispose of wastes into streams or waterways.

F. Complete all cleaning in occupied space without damaging existing equipment, furnishings, property or adjacent residential properties. All repairs and replacements will be made at CONTRACTOR'S sole expense with no additional costs to the Owner.

PART 2 PRODUCTS

2.1 CLEANING MATERIALS

A. Use only materials and methods recommended by manufacturer of material being cleaned.

B. Do not use materials which will create hazards to health or property, or which will damage surfaces.

C. Provide covered containers for deposit of waste materials, debris, and rubbish.

PART 3 EXECUTION

3.1 CLEANING DURING CONSTRUCTION

A. Perform daily cleaning at the end of each work shift in occupied spaces to keep construction areas and travel paths free of accumulations of waste materials, rubbish, and debris resulting from construction operations.
   1. Prior to Substantial Completion remove construction tools, scaffolding, equipment, machinery, and surplus materials.
   2. Broom clean and vacuum interior areas prior to start of surface finishing, and continue cleaning to eliminate dust.
   3. Schedule cleaning operations so that dust and other contaminants will not fall on or adhere to wet or newly-coated surfaces.

4. Remove debris and rubbish from pipe chases, plenums, attics, crawl spaces, and other closed or remote spaces, prior to enclosing space.

B. Collect and remove waste materials, debris, and rubbish from site periodically until execution of final cleaning and dispose off site in lawful manner.

C. All cleaning to be performed to the level of satisfaction of ENGINEER and Owner.

3.2 CLEANING BY AIR BLOWING

A. Clean all pneumatically tested piping systems by flushing with air.

B. Provide safe means for introducing and exhausting compressed air into and from the piping systems.

C. Provide sufficient air to maintain 2,000 to 4,000 feet per minute air velocity in the pipe for 30 seconds or until exhaust air is free of all foreign material.

D. During air blowing operation, hammer lightly on the outside of the pipe with a rubber or plastic-tipped hammer to help free weld spatter, scale, dirt, or other debris.

E. Mechanically clean dead-end parts of piping after air blowing is completed.

3.3 CLEANING BY WATER FLUSHING

A. Clean all hydrostatically tested piping systems with water.

B. Provide temporary means for filling and draining water from the piping system. Remove temporary connections after completing cleaning and testing.

C. Break connections at terminal equipment and run temporary lines to safe OWNER-approved disposal point.

D. Provide sufficient water to fill pipe water lines full and flow at an average velocity of 5 feet per second for one minute or until discharge water is as clean as entering water. Continuously discard rinse water.

E. During flushing operations, hammer lightly on the outside of the pipe with a rubber or plastic-tipped hammer to help free weld spatter, scale, dirt, or other debris.

F. Open all vents during draining cycle.

G. Mechanically clean dead-end parts of piping after flushing is completed.

3.4 MECHANICAL CLEANING

A. Thoroughly hand-clean all internal dead-end parts of piping systems to the ENGINEER and/or OWNER's satisfaction.

B. All foreign materials will be removed from all components.

3.5 FINAL CLEANING

A. General:
   1. Remove tools, construction equipment, machinery, and surplus material from Project site.
   2. Employ experienced personnel or professional cleaning firm.

B. Cleaning: Clean exposed interior hard-surfaced finishes to dirt-free condition, free of stains, films, and similar foreign substances.
   1. Remove labels which are not required as permanent labels.
   2. Clean glossy materials to polished condition; remove foreign substances.
   3. Glass and Glazing:
      a. Wash and clean mirrors and both sides of glass.
      b. Remove putty and other substances which obscure vision.
      c. Replace chipped, scratched, and broken glass.
   4. Clean concrete floors.
   5. Clean resilient flooring, and other similar hard-surface flooring, including associated bases. Refer to individual sections for requirements of sealing, buffing, waxing, and polishing.
   6. Clean carpet and similar soft surfaces, removing debris, soil, and excess nap.
   7. Clean exposed surfaces of equipment; remove excess lubrication.
   8. Clean light fixtures and lamps; replace burned-out lamps.

C. Prior to final completion, conduct inspection of sight-exposed surfaces and associated work areas to verify that entire Work is clean.

D. Maintain cleaning until Project, or portion thereof, is accepted by OWNER, PROPERTY OWNER, and ENGINEER.

3.6 TESTS, ACCEPTANCE, AND GUARANTEES

A. OWNER and/or ENGINEER will witness and inspect all cleaning. CONTRACTOR will repeat any cleaning necessary after final testing and repairs of piping systems. Final acceptance if cleaning will be after final pressure testing of piping systems.

B. CONTRACTOR will guarantee cleaning operation against defective material and will guarantee that piping systems are free of foreign material related to hydrostatic test for 12 months after final acceptance.

END OF SECTION

SECTION 01750

GUARANTEES AND WARRANTIES

PART 1 GENERAL

1.1 SECTION INCLUDES

A. Preparation and submittal.

B. Time and schedule of submittals.

1.2 RELATED SECTIONS

A. Bid Documents

B. General Contract

C. Section 01300 - Submittals

D. Section 01700 - Contract Closeout

E. Section 01720 - Operation and Maintenance Data

F. Individual Specifications Sections: Warranties required for specific equipment, materials, products, or Work.

1.3 FORM OF SUBMITTALS

A. Provide three (3) separate copies, bound in commercial quality, 8-1/2 x 11-inch three-ring side binders with hardback, cleanable, plastic covers. Additionally, include an electronic copy of all submittals copied to a CD with each binder.

B. Label cover of each binder with typed or printed title GUARANTEES AND WARRANTIES, with title of Project; name, address and telephone number of Contractor and equipment supplier; and name of responsible principal.

C. Table of Contents: Neatly typed, in the sequence of the Table of Contents of the project specifications, with each item identified with the number and title of the specification Section in which specified, and the name of the product or work item.

D. Separate each warranty or bond with index tab sheets keyed to the Table of Contents listing. Provide full information, using separate typed sheets as necessary. List subcontractor, supplier, and manufacturer, with name, address, and telephone number of responsible principal.

1.4 PREPARATION OF SUBMITTALS

A. Obtain warranties and bonds, executed in duplicate by responsible subcontractors, suppliers, and manufacturers, within 10 days after completion of the applicable item or work. Except for items put into use with Engineer's permission, leave date of beginning of time of warranty blank until the Date of Substantial Completion is determined by Engineer.

B. Contractor shall verify that documents are in proper form, contain the required information, and are notarized.

C. Co-execute submittals when required.

D. Retain warranties and bonds until time specified for submittal.

1.5 TIME OF SUBMITTALS

A. For equipment or component parts of equipment put into service during construction with Engineer's permission, submit documents within 10 days after acceptance.

B. Make other submittals within 10 days following Date of Substantial Completion, prior to final Application for Payment.

C. For items of Work when acceptance is delayed beyond Date of Substantial Completion, submit within 10 days after acceptance, listing the date of acceptance as the beginning of the warranty period.

1.6 SCHEDULE OF SUBMITTALS

A. In accordance with Section 01300.

PART 2 PRODUCTS (NOT USED)

PART 3 EXECUTION (NOT USED)

END OF SECTION

DIVISION 2

SECTION 02200

EARTHWORK

PART 1 GENERAL

1.1 DESCRIPTION OF WORK

A. Work covered by this Section consists of furnishing all materials, labor, tools, equipment and transportation necessary for all construction as it pertains to the excavating, stockpiling, filling, compacting and grading of earthwork for underground pipelines, electrical services, and structural footings and piers. The Work includes all hauling, stockpiling, covering, wetting or drying, dewatering, compacting and other operations pertaining thereto for constructing and preparing the earthwork complete in accordance with these Specifications or as directed by ENGINEER.

B. Work shall include, but not be limited to, the following activities:
   1. Site grading,
   2. Maintaining drainage ditches and swales,
   3. Preparing and testing the on-site and off-site borrow source areas,
   4. Subgrade preparation, backfilling, and compaction,
   5. Furnishing, hauling, placing and compacting various soil materials as required,
   6. Stockpile of excavated soils for future use at location designated by Owner, and
   7. Removal and off-site disposal of excess excavated soils.

C. All soil management activities will be in accordance with the Soil Management Plan (SMP). The ENGINEER will provide the CONTRACTOR with the latest version of the SMP.

D. All soil types shall consist of material approved by NYSDEC and ENGINEER from off-site that have previously been accepted, and/or approved materials removed from excavation. During construction, the construction area shall be well drained; no materials shall be backfilled when either the material or the surfaces on which it is to be placed are frozen or excessively wet. When Work is interrupted by heavy rain, fill operations shall not be resumed until CONTRACTOR demonstrates to ENGINEER through testing that the moisture content and density of the previously placed soils are as specified.

E. CONTRACTOR shall establish and maintain effective erosion and siltation control for the project site. At no time will runoff or construction water be permitted to leave the site and enter the adjacent drainage ditches.

F. Work must comply with the Project Health and Safety Plan.

1.2 DEFINITIONS

A. ASTM: American Society for Testing and Materials.

B. Clean Soils: Soil materials that are certified by the supplier and confirmed through testing by the CONTRACTOR as "clean" in accordance with Paragraph 2.1 below.

C. Topsoil: Soils that shall be utilized at the fill surface to support vegetative growth.

D. Compaction: Measured as a percent of Standard or Modified Proctor density.

E. Excavation: Excavation of every description and of whatever substances encountered within the grading limits of the project.

F. Finish Grading: Operations required for grading and smoothing areas that are undeveloped.

G. Over Excavation: Excavation, as defined, but beyond the indicated subgrade elevations or dimensions.

H. Subgrade: Subgrade includes the existing on-site soil or material which has been prepared as a foundation for other soil types or granular materials.

I. Structures: Buildings, footings, foundations, retaining walls, slabs, curbs, mechanical and electrical appurtenances, or other man-made stationary features constructed above or below the ground surface.

J. Utilities: underground pipes, conduits, ducts, and cables.

1.3 RELATED WORK

A. Section 02232 - Granular Materials

B. Section 02936 - Establishment of Vegetation.

1.4 REFERENCES

A. All ASTM C-33 Standard Specification for Concrete Aggregates.

B. ASTM D-422 Standard Test Method for Particle-Size Analysis of Soils.

C. ASTM D-1557 Laboratory Compaction Characteristics of Soils using a Modified Effort (Modified Proctor).

D. ASTM D-2216 Standard Test Method for Laboratory Determination of Water (Moisture) Content of Soil and Rock.

E. ASTM D-2487 Standard Classification of Soils for Engineering Purposes.

F. ASTM D-2922 Standard Test Method for Density of Soil and Soil-Aggregate in Place by Nuclear Methods (Shallow Depth).

G. ASTM D-2974 Standard Test Method for Moisture, Ash, and Organic Matter of Peat and Other Organic Soils.

H. ASTM D-3017 Standard Test Method for Moisture Content of Soil and Rock in Place by Nuclear Methods (Shallow Depth).

I. NYSDOT Standard Specifications (Updated September 2016)).

1.5 QUALITY ASSURANCE

A. All materials, procedures, operations, and methods shall be in strict conformance with the Drawings and Specifications, and shall be subjected to strict quality control monitoring as

detailed herein. The placed fill soils shall conform exactly to the Drawings and Specifications, except as otherwise authorized in writing by the ENGINEER.

B. CONTRACTOR shall comprehend and anticipate Construction Quality Assurance (CQA) activities and account for these activities in the installation schedule.

C. Contractor shall employ an independent testing laboratory to sample and certify the soils are clean and free of contaminants, and perform sieve analysis and other tests to demonstrate that material meets the specified requirements and is suitable for the intended use in accordance with project requirements.

1.6 SUBMITTALS

A. CONTRACTOR shall submit to ENGINEER for review the proposed methods of construction, excavation, filling, compaction, and backfilling for the various portions of Work. Review shall be for method only. CONTRACTOR shall remain responsible for the adequacy and safety of the methods.

B. CONTRACTOR shall submit to ENGINEER a stockpiling plan prior to commencement of earthwork activities. The plan shall indicate the location and contents of each stockpile as approved by PROPERTY OWNER.

C. CONTRACTOR shall submit the location of all on-site and off-site borrow pits to ENGINEER no less than two weeks prior to the anticipated placement of any soil materials. Information regarding the borrow pits shall also include:
   1. Present and past usage of the source site and material;
   2. All existing reports, if available, associated with an assessment of the borrow pit site as related to the presence of oil or hazardous materials; and
   3. Chemical Test Data: Results of analytical testing to confirm that the borrow source is not contaminated.

D. CONTRACTOR shall submit the results of the ASTM tests listed below for each borrow pit location and the designated material classification to verify that the soil materials meet the technical requirements of this Section:

Parameter	ASTM Test Method[1]	Frequency	Soil Classification
Water Content	D-2216	No less than one per Material Type	Common Fill, Granular Fill, Pipe Bedding
Soil Classification	D-2487	No less than one per Material Type	Common Fill, Granular Fill, Pipe Bedding
Particle Size Analysis	D-422	No less than one per Material Type	Common Fill, Granular Fill, Pipe Bedding
Modified Proctor	D-1557	No less than one per Material Type	Common Fill, Granular Fill, Pipe Bedding

Parameter	ASTM Test Method[1]	Frequency	Soil Classification
pH	D-4972	one per 200 cy	Topsoil
Organic Content	D-2974	one per 200 cy	Topsoil

Note: 1. Comparable NYSDOT test methods may be substituted if approved by ENGINEER.
The test results shall be submitted to ENGINEER no less than five days prior to the anticipated placement of any soil materials furnished from on-site or off-site.

E. CONTRACTOR shall submit the results of in-place density and moisture content testing of compacted fill daily.

F. CONTRACTOR shall submit qualifications of proposed independent testing laboratory for approval by ENGINEER. Costs for all geotechnical testing shall be paid for by CONTRACTOR.

1.7 PROJECT CONDITIONS

A. Existing Utilities: The CONTRACTOR shall not interrupt utilities serving facilities occupied by the Owner or others unless authorized in writing by the ENGINEER and after arranging to provide temporary utility services according to the requirements indicated:
   1. Notify the OWNER not less than two days in advance of proposed utility interruptions.
   2. Contact utility locator service for area where project is located before excavating.

B. All excavation, trenching, and shoring operations must be conducted in accordance with the State of New York Rules and Regulations and in accordance with 29 CFR Part 1926, Occupational Safety and Health Standards – Excavations; Final Rule (October 31, 1989), and amendments. The selection of appropriate temporary slope angles is the responsibility of the CONTRACTOR. CONTRACTOR is responsible for construction operations and safety. In selecting temporary slopes, the CONTRACTOR should consider the type of materials excavated, groundwater and seepage conditions, the presence of construction equipment, and other surcharge loads near the top of the excavation, the excavation depth, and the slope and conditions of the bedrock. It is expected that the natural soils and existing fill materials can be excavated with conventional equipment.

PART 2 PRODUCTS

2.1 GENERAL

A. CONTRACTOR shall recommend off-site borrow locations. Off-site borrow locations and materials are subject to approval by the OWNER and ENGINEER.

B. On-site borrow locations and materials shall be subject to approval by ENGINEER.

C. Off-site borrow fill/soil shall not be affected or in any way degraded by any waste disposal or prior industrial or commercial activity. Material from industrial sites, spill sites, or other environmental remediation sites, or potentially contaminated sites, will not be imported to the Site. "Clean" soils shall be so certified by the supplier and CONTRACTOR shall provide the results of a waste classification analysis conducted in accordance with New York Department of Environmental Conservation requirements.

2.2 GENERAL FILL

A. Where the type of fill material is not specified, with the exception of under structures, roadways and parking areas, General Fill may be used. Common Fill soils shall not contain stones larger than two (2) inches in largest diameter and shall be classified according to the Unified Soil Classification System (USCS) as SM or SC. Testing of excavated soil shall be done by CONTRACTOR at no added cost to ENGINEER.

B. General Fill shall not contain cinders, ashes, refuse, sod, frozen lumps, vegetable or organic material, boulders, rocks or stones, or other material deemed unsuitable by the ENGINEER. It shall have physical properties such that it can readily spread and be compacted during filling. Snow, ice, and frozen soil shall not be permitted.

2.3 PIPE BEDDING AND ELECTRICAL CONDUIT AND DUCTBANKS

A. Soil materials to be used as Pipe Bedding shall meet the requirements for fine aggregate Type A4. Fine aggregate Type A4 shall be natural river or bank, crushed, or conglomerate granular material; free of silt, clay, loam, friable or soluble materials, and organic matter; graded in accordance with ASTM D2487 Group Symbol SP; within the following limits:

Sieve Size	Percent Passing
3/8 inch	100
No. 100	0 to 15

B. Pipe Bedding shall not contain cinders, ashes, refuse, sod, frozen lumps, vegetable or organic material, boulders, rocks or stones, or other material deemed unsuitable by the ENGINEER.

2.4 GRANULAR FILL

A. Soil material for structural foundation shall be Granular Fill. Material for Granular Fill shall consist of a dense graded crushed concrete or aggregate granular material which has a maximum nominal aggregate size of 3-inches, is classified as GW or GW-GM material according to the USCS. It shall be free of organic material, loam, trash, snow, ice, frozen soil or other objectionable material.

2.5 TOPSOIL

A. Topsoil shall consist of friable and loamy soil material (loam, sandy loam, silty loam, sandy clay loam, clay loam) and shall be free of debris, trash, stumps, rocks, roots, and weeds. Topsoil shall be able to support healthy vegetation and shall not contain substances which may be toxic to humans or plants. Organic matter content shall be greater than 4.0 percent by weight, and pH shall be within the range of 5.0 and 6.5. Lime shall be added appropriately if the pH is less than 6.0, as directed by the ENGINEER. Soluble salts shall not exceed 500 parts per million (ppm).

2.6 ACCESSORIES

A. Warning Tape: Magnetic, acid- and alkali-resistant polyethylene film warning tape manufactured for marking and identifying underground utilities encountered or installed, 6 inches wide and 4 mils thick, continuously inscribed with a description of the utility; colored as follows:
   1. Red: Electric.
   2. Yellow: Gas, oil, steam, and compressed air.
   3. Orange: Telephone and other communications.
   4. Blue: Water systems.
   5. Green: Sewer systems.

PART 3 EXECUTION

3.1 GENERAL

A. Wet, soft, frozen or otherwise unsuitable subgrade shall be excavated and backfilled with Granular Fill. All roots, stumps, rock and foreign matter in the sides and bottom of excavations shall be removed. Excavations shall conform to the slope, grade, and shape of the section shown. Care shall be taken not to excavate below the grades indicated. Excessive excavation shall be backfilled to grade with suitable, thoroughly compacted Granular Fill material as directed by ENGINEER with no additional cost to ENGINEER.

B. Structures, utilities, roadways, and other facilities inside and outside the Limits of Construction shall be protected from damage caused by settlement, lateral movement, undermining, wash-out and other hazards created by the earthwork operations or delivery of fill materials.

C. Stormwater management controls and sedimentation controls shall be maintained during construction activities in accordance with Federal, State, and local regulations.

D. CONTRACTOR shall be responsible for maintaining dry conditions at all times and shall be responsible for providing the necessary equipment to maintain dry conditions. CONTRACTOR shall be responsible for properly collecting and pumping water from the construction site in accordance with Section 01500 Temporary Facilities and Controls of these Specifications and all Federal, State, and local regulations.

E. Pumping and drainage.
   1. At all times during construction and up to the point of actual turnover to ENGINEER, CONTRACTOR shall provide and maintain proper equipment and facilities to remove all water generated from construction activities, and keep the work area dry so as to obtain a satisfactory undisturbed subgrade foundation condition until the cover system soils have been completed to such extent that they will not be floated or otherwise damaged by water.
   2. Dewatering shall at all times be conducted in such a manner as to preserve the undisturbed bearing capacity of the existing soils within the Limits of Construction.
   3. The dewatering and disposal of any storm water accumulation from excavations must be in accordance with all applicable local, state, and federal regulations. Filter and remove silt, sediment, and other material as necessary prior to discharge as required.

F. If the moisture content of the fill material is outside the accepted range, the soil shall be wetted or dried, as appropriate.

1. Fill material that is too wet to permit compaction shall be removed and stockpiled or spread and allowed to dry. Drying may be accomplished by disking, harrowing, or pulverizing until moisture content is reduced to a satisfactory level.
2. Fill material that is too dry shall be wetted uniformly so as to prevent free water appearing on the surface during or subsequent to compaction operations.

G. Any delays in progress due to wetting or drying of soil are the responsibility of CONTRACTOR.

H. Soils placed in fill areas shall be graded to smooth true lines, strictly conforming to grades indicated on the Drawings.

I. CONTRACTOR shall verify that all soil material has been placed to the lines, grades, and elevations presented on the Drawings.

J. Fill materials shall be placed in such a manner as to facilitate drainage at all times. Ponding of surface-water run-off shall not be permitted.

K. If compaction tests indicate that any portion of the work does not meet the specified requirements, then CONTRACTOR shall recompact or remove and replace that section, as necessary, at no additional cost to ENGINEER. Determinations of the extent of removal and the acceptability of the in-place fill materials shall be made by ENGINEER.

L. If significant precipitation causes wet conditions, placement and compaction activities shall be terminated until the conditions have dried sufficiently to continue according to ENGINEER.

M. Equipment or vehicles shall not be allowed to travel in a single track or form ruts. Any ruts or irregularities formed shall be scarified and recompacted by CONTRACTOR at his expense as required and directed by ENGINEER.

3.2 EXCAVATION

A. Excavation shall be made to the grades shown on the Drawings, or as directed by ENGINEER. Care shall be exercised when stripping or removing soil so as to prevent over-excavation.

B. Exposed subgrade soils below structures shall be inspected by the ENGINEER to identify any weak or otherwise unsuitable areas.

C. The upper subgrade surface loosened during excavation shall be compacted. Further improvement of subgrade soils in cut areas may be necessary due to loose or wet conditions and will be determined during subgrade preparation by the ENGINEER.

3.3 BACKFILLING

A. Backfill for Structures
1. Backfill shall be placed in loose lifts not to exceed 6" thick when compaction is to be performed by hand-operated equipment or in confined areas, such as adjacent to footings and walls. Backfill shall be placed in loose lifts not to exceed 9 inches thick when the material is to be compacted using vibratory roller compaction equipment. Compact each layer with a minimum of four coverages of the equipment described above. The Contractor shall decrease the lift thickness as needed to achieve the compaction requirements below.

Material	Minimum Percent Compaction Required (ASTM D-1557, Method C)
Granular Fill	95
Common Fill	92

2. The fill shall be compacted with a range of 1 percent below to 3 percent above the optimum moisture content as determined by ASTM D-1557.

B. Backfill for Utilities
1. Do not commence backfilling operations until all piping, conduit, etc. has been accepted by the ENGINEER. Backfill carefully by hand around pipe and to a distance of 12-in. over the pipe with Pipe Bedding. Backfill simultaneously on all sides of the pipe. Pipe Bedding shall be placed by hand and compacted with mechanical tampers to not less than 95% of maximum dry density at optimum moisture content of the material as determined by ASTM D-1557. Backfill remainder of trench using materials and procedures specified in Part 3.3 A.

C. Topsoil
1. Topsoil shall meet the requirements of Part 2.5 of this Section. Soil mixing is permitted to achieve the desired characteristics. Soil mixing shall be conducted prior to placing the material, and the mixed material shall be tested in compliance in accordance with this Section.
2. All ground areas disturbed by construction under this Contract and not built over, paved or otherwise surfaced, shall be covered with topsoil.
3. Previously constructed grades shall be repaired, if necessary, so that the areas to be covered with topsoil shall conform to the section indicated on the Drawings upon completion of topsoil placement.
4. The topsoil shall be uniformly distributed on the designated areas and evenly spread to a minimum loose thickness of 6 inches. The spreading shall be performed in such a manner that planting can proceed with little additional soil preparation or tillage. The surface resulting from placing topsoil shall meet the final grades as indicated on the Drawings. Topsoil shall not be placed when the subgrade is frozen, excessively wet, extremely dry, or in a condition otherwise detrimental to proper grading or the proposed planting.

3.4 EXCESS MATERIALS

A. Excess materials shall be removed from the site, as specified by ENGINEER.

B. Suitable materials, as determined by tests discussed in these specifications, shall be classified and stockpiled in approved areas for immediate or future use.

C. Stockpiles shall be graded to drain; no surface-water ponding is permitted on stockpiles. Stockpiles may be covered with visqueen plastic sheeting or other material to preserve the soil integrity.

D. Stockpiles that are not used for more than 14 days shall be covered as discussed in Part 3.4 D or be temporarily vegetated.

3.5 GRADING

A. Rough grading of the site shall be performed to establish a base upon which backfill material can be adequately placed.

B. Uneven areas and low spots which may develop in the backfill operations shall be eliminated via minor excavations or placement of select fill. Levels, profiles and contours of the final site configuration shall be maintained as established on the Drawings.

C. The areas to be backfilled shall be uniformly graded to within the Limits of Construction under this section, including adjacent transition areas. A smooth finished surface shall result within specified tolerances, compact with uniform levels or slopes between points where elevations are indicated, or between such points and existing grades to the satisfaction of ENGINEER.

D. Constructed slopes shall be blended into existing undisturbed areas gradually in order to provide neat, clean transition zones. Feathering of constructed slopes into existing grades shall be accomplished to promote natural drainage and to eliminate possible surface-water ponding.

E. The right is reserved by ENGINEER to make minor adjustments or revisions in lines or grades if found necessary as the work progresses, due to discrepancies on the Drawings or in order to obtain satisfactory construction. Report any suspected discrepancies to ENGINEER as soon as detected.

3.6 CRITERIA AND TOLERANCES

A. Compaction and moisture content criteria and tolerances are discussed in Part 3.3 of this Section.

B. In recognition of the moisture-density relationship of soils, ENGINEER may direct that the compaction and moisture content tolerances be modified if required by variability in the soils. This decision, if required, will be based on ENGINEER's interpretation of the laboratory analyses for each soil.

3.7 FIELD QUALITY CONTROL

A. CONTRACTOR shall test the in-place density and moisture content using ASTM D-2922 and ASTM D-3017, respectively. NYSDOT test methods may be substituted if approved by the ENGINEER. The testing shall be conducted at a rate of 1 per 3,000 square feet per lift. In fill areas less than 3,000 square feet in size, trench or linear fills (e.g., for column pads or strip footings), each isolated fill lift shall be tested and each linear fill lift shall be tested not less than once per 100 lineal feet.

B. ENGINEER may perform verifying density, moisture content, and permeability tests and thickness measurements in the field.

C. CONTRACTOR shall provide a minimum of 24 hours notice to the ENGINEER when each compacted lift is ready for testing.

D. CONTRACTOR shall provide access and repair any damage to subgrade, embankment, subbase, or base caused by correctly performed tests, and cooperate in other ways necessary to permit ENGINEER to conduct testing when and where desired and as expeditiously as possible.

E. Fill material shall not be placed over a lift that has not been tested by CONTRACTOR and approved by ENGINEER.

F. Provide ENGINEER with a 5-gallon sample of each backfill material testied and approved for use at this site.

END OF SECTION

SECTION 02232

GRANULAR MATERIALS

PART 1 GENERAL

1.1 DESCRIPTION

A. The Work covered by this Section consists of furnishing all labor, materials, tools, equipment and incidentals necessary for obtaining and placing the granular components as indicated on the Drawings and specified herein.

1.2 RELATED WORK

A. Section 02200 - Earthwork.

B. Section 02290 - Erosion and Sediment Control.

1.3 REFERENCES

A. ASTM C-136 Standard Method for Particle-Size Analysis of Aggregates.

B. ASTM D-2434 Permeability of Granular Soils (Constant Head).

C. ASTM D-2922 Standard Test Methods for Density of Soil and Soil-Aggregate in Place by Nuclear Methods (Shallow Depth).

1.4 QUALITY ASSURANCE

A. All materials, procedures, operations, and methods shall be in strict conformance with the Drawings and these Specifications, and shall be subject to strict quality control monitoring as detailed herein. The CONTRACTOR shall comprehend and anticipate the CQA activities and account for these activities in the installation schedule. The placed granular materials shall conform exactly to the Drawings and these Specifications, except as otherwise authorized in writing by the ENGINEER.

1.5 SUBMITTALS

A. The CONTRACTOR shall submit a list of all aggregate material suppliers who will furnish materials to the job and the location of all borrow pits to the ENGINEER no less than two weeks prior to the anticipated placement of any granular materials.

B. The CONTRACTOR shall submit in a 5-gallon bucket with removable lid, a minimum of 50 pounds of each type of processed stone material proposed to be used at the facility. The CONTRACTOR shall also submit gradation analyses for each processed stone sample as performed by a qualified testing laboratory to demonstrate to the ENGINEER that the processed granular materials meet the required specifications. The samples and test results shall be submitted a minimum of ten (10) working days prior to its use.

C. The CONTRACTOR shall submit a list of compaction equipment proposed for use on the project.

D. The CONTRACTOR shall submit the name and address of any subcontractor proposed for use on this Project to the ENGINEER a minimum of ten (10) working days prior to that subcontractor performing work on the Project. Inferior performance on prior Projects of a similar nature shall be grounds for rejecting the CONTRACTOR's subcontractor by the OWNER or ENGINEER.

E. CONTRACTOR shall submit the results of field density testing or any other testing conducted to document conformance with the Product and Execution.

1.6 PROJECT CONDITIONS

A. The CONTRACTOR shall mark out the trench excavation route for the underground pipelines/conduit prior to beginning any excavation Work. This shall be completed by placing pin flags, grade stakes, or painted marks at no more than 50- foot intervals along the centerline of the pipeline/conduit routes.

B. The CONTRACTOR shall contact the OWNER and ENGINEER for clearance of proposed excavation work allowing five (5) working days for OWNER clearance prior to beginning excavation.

1.7 DELIVERY

A. The CONTRACTOR shall notify the ENGINEER one (1) week in advance of delivery of all granular materials. The CONTRACTOR shall stockpile granular materials only at a location approved by the OWNER and/or ENGINEER.

PART 2 PRODUCTS

2.1 ALL GRANULAR MATERIALS

Granular material should not be affected or in any way degraded by any waste disposal or industrial or commercial activity.

2.2 GRANULAR MATERIALS

A. Pipe Bedding
   1. Pipe Bedding: Pipe bedding for placement around the pipeline shall be placed in 6-inch lifts and shall consist of pea gravel that is free of ice, snow, roots, sod, rubbish, and other deleterious and organic matter that meets the gradation requirements as determined by ASTM C-136.

B. Foundation Subbase
   1. NYDOT Item 304.11 Type 1 under equipment foundations where noted.

PART 3 EXECUTION

3.1 INSPECTION

A. The CONTRACTOR shall verify that finished grades, slopes and elevations conform to the specified requirements. Misgraded Work shall be corrected at no additional cost to the OWNER. CONTRACTOR shall notify the ENGINEER immediately if a specified grade, slope or elevation appears inconsistent with the others specified.

B. At the beginning of each day's Work, the ENGINEER will inspect the previously placed granular materials and institute whatever corrective action, if any, that the ENGINEER deems appropriate, at no extra cost to the OWNER, unless the action requested is clearly beyond the scope of this Contract. This may include, but is not limited to the removal of unsuitable granular materials.

3.2 PLACEMENT OF GRANULAR MATERIALS

A. All granular materials shall be placed, not dumped, to the limits and grades shown on the Drawings.

B. Compaction: The compaction requirements will vary based on the type of material. Soil used as Trench Backfill shall be compacted in accordance with the performance requirements outlined in section 3.02-B.2 below and tested in the field as outlined in section 3.04-C by an independent testing agency at the CONTRACTOR's expense to demonstrate conformance with the compaction requirement. The processed gravel and sand materials shall be compacted in accordance with the procedures specified in paragraph 3.02-B.3.

1. Backfill Materials: Backfill and other soils that are not processed gravel and sand materials shall be placed in loose lifts not to exceed 6 inches in thickness when compaction is to be performed by hand-operated equipment. Excavated materials that are retained for reuse as Backfill shall be placed in loose lifts not to exceed 9 inches thick when the material is to be compacted using vibratory roller compaction equipment. The CONTRACTOR shall decrease the lift thickness as needed to achieve the compaction requirements below.

Fill Location	**Minimum Percent Compaction Required (ASTM D-1557, Method C)**
Existing pavement areas, foundation materials in base of trench below pipe bedding, replacement of existing subbase, fill or backfill below base course, foundation subbase	95
Unpaved areas, foundation materials in base of trench below pipe bedding, fill or backfill placed as trench backfill or embankment fill in existing unpaved areas.	90

2. Processed Gravel and Sand Materials: The CONTRACTOR shall place and compact the processed materials in lifts 6-inches thick or less when hand-operated vibratory plate compactor equipment is used. Processed gravel and sand materials used as pipe bedding shall be compacted with at least 4 passes with a vibratory plate compactor rated at a 1,000-pound dynamic load capacity. Only compaction with hand-operated vibratory plate compactor equipment shall be allowed for compaction of material in the pipe bedding zone. The CONTRACTOR shall place and compact the processed granular materials in lifts 6-inches thick or less when vibratory rollers are used to compact materials in the trench backfill zone. Processed stone materials shall be compacted with at least 3 passes with a vibratory roller rated at an 8,000-pound dynamic load capacity.

3.3 CRITERIA AND TOLERANCES

A. Final grades shall be within two tenths of one (0.2) foot below to five tenths of one (0.5) foot above (-0.2 to +0.5) the grades and contours indicated on the Drawings, or as dictated by changed field conditions, and approval by the ENGINEER. Regardless of the final grade tolerances, the thickness of the granular materials shall meet the minimum thickness as stated in each application.

B. No additional payment will be made for quantities of materials placed in excess of that amount required to achieve the minimum specified thickness.

3.4 FIELD QUALITY CONTROL

A. The CONTRACTOR will perform thickness measurements in the field to demonstrate to the ENGINEER compliance with the Drawings and Specifications. The ENGINEER may require the CONTRACTOR to perform additional thickness measurements to demonstrate compliance with the Drawings and Specifications.

B. The CONTRACTOR will survey the graded and filled areas to demonstrate to the ENGINEER compliance with the Drawings and Specifications. The ENGINEER may require the CONTRACTOR to perform additional surveying to demonstrate compliance with the Drawings and Specifications.

C. The CONTRACTOR shall have an ENGINEER approved, independent, on-site soil testing company to test each type of the suitable excavated backfilled soil material for density to ensure that compaction procedures are achieving the required compaction level for the particular area. Field density tests in accordance with ASTM D-2922 shall be performed, and at least two field density tests shall be completed for each of the areas and materials (if Backfill material varies) to confirm the field compaction efforts are adequate. The CONTRACTOR will not have to complete additional density tests once it is demonstrated to the ENGINEER through testing that the compaction efforts for each type of excavated backfill material and in each area are meeting the specifications. The ENGINEER may require the CONTRACTOR to re-test, at no additional cost to the OWNER, a compacted material if the compaction procedures or the density of the material are in question.

3.5 CONTAINMENT, TESTING, AND DISPOSAL OF WASTE MATERIALS

A. No excess soil, soil screenings or debris shall be removed from the site without the OWNER's written permission.

B. The CONTRACTOR shall dispose of the excavated materials (if required) in accordance with state and federal regulations and as directed by the ENGINEER.

END OF SECTION

SECTION 02250

MANAGEMENT, TRANSPORTATION, AND DISPOSAL OF MATERIALS

PART 1 GENERAL

1.1 DESCRIPTION

A. The CONTRACTOR shall furnish all labor, material, tools, and equipment, required to transport and dispose of all contaminated waste and soil material as specified in these Specifications.

1.2 RELATED WORK

A. Section 02200 - Earthwork

1.3 REGULATORY REQUIREMENTS

A. All contaminated waste and soil material shall be disposed in an approved off-site waste disposal facility(s) in accordance with all federal, state, county, and local regulations.

B. The CONTRACTOR shall comply with all applicable regulatory requirements and all federal, state, county, or local laws, codes, and ordinances which govern the transportation and disposal of material to be removed from the site. Materials transported off-site shall meet the USEPA off-site disposal policy and comply with all applicable regulations.

C. The CONTRACTOR shall obtain any and all permits required for transportation and disposal, and comply with all applicable requirements.

D. The CONTRACTOR shall comply with all requirements of the site Solid Waste Management Plan for managing, sampling, stockpiling, transportation, and disposal.

1.4 TRANSPORTATION

A. Transportation shall occur only during normal working hours, between Monday and Friday inclusive, unless otherwise approved by the ENGINEER.

1.5 SUBMITTALS

A. All submittals required under this Section shall be made in accordance with Section 01300 – SUBMITTALS

B. The CONTRACTOR shall dispose of any waste material in accordance with federal, state and local regulations. All documents (i.e. waste profile forms, manifests, etc.) developed shall be reviewed by the ENGINEER in the draft form prior to finalizing and will not be finalized until ENGINEER's review is completed. The ENGINEER will coordinate signing the forms with the OWNER.

C. The CONTRACTOR shall submit written documentation certifying that the disposal facilities are in compliance with all regulations and permits, and are willing to accept the materials. A copy of the most recent inspection reports shall be submitted to the ENGINEER verifying that the facilities have no violations or other environmental conditions that affect the satisfactory operation of the facilities.

D. The CONTRACTOR shall submit copies of results of any tests performed at the disposal facilities by the disposal facilities.

E. The CONTRACTOR shall prepare and submit to the ENGINEER a Transportation Management Plan with information regarding transporting materials from the site for disposal or final disposition, including the disposal facilities locations, method of transportation, typical load volumes for the various modes of transportation, the transport route to the disposal facilities, the anticipated number of trips to the disposal facilities, management of materials at the designated stockpiles, the number and type of trucks, and the proposed types and locations of necessary traffic control devices, personnel, and signs to be installed and maintained by the CONTRACTOR. The CONTRACTOR shall also list all federal, state, county, and local regulations that must be complied with and all permits that must be obtained.

F. The CONTRACTOR shall not commence with the removal of impacted soil, or any other material, until the ENGINEER has approved the submitted information.

G. The CONTRACTOR shall submit copies of weigh tickets or other receipts provided by the disposal facility to the ENGINEER as evidence of the arrival and disposal of the material at the disposal site. The documentation submitted to the ENGINEER shall, at a minimum, identify the origin of the material, the quantity of the material (tons, cubic yards, units, etc.), the identification of the transport vehicle, the type of material, and the date the material was disposed of at the facility.

H. The CONTRACTOR shall be responsible for ensuring that the waste is disposed of in accordance with this specification and that all final documents have been provided to the ENGINEER. The CONTRACTOR shall ensure that copies of the disposal facility-received manifests have been returned to the OWNER.

1.6 DISPOSAL FACILITIES

A. The ENGINEER reserves the right to direct the CONTRACTOR to dispose the material to an OWNER approved facility identified by the ENGINEER. Should the ENGINEER direct the CONTRACTOR to dispose the material at a specific facility, this Agreement will be amended in accordance with the General Conditions.

B. Unless directed by the ENGINEER to dispose material at a particular facility, the CONTRACTOR shall be responsible for the location of the disposal facilities; e.g., solid waste disposal facility, hazardous waste disposal facility, etc., which shall accept all materials removed from the site, including materials generated from site clearing and grubbing or other activities performed in the areas of impacted soils.

C. The disposal facilities shall be approved by the ENGINEER. The disposal facility shall be in compliance with all current federal and state regulations governing construction and operation of a solid/hazardous waste disposal or treatment facility.

1.7 ALTERNATE DISPOSAL FACILITY

A. In the event that the identified and approved facilities cease to accept the stated materials or the facility ceases operations, it is the CONTRACTOR's responsibility to locate an alternate approved and permitted facility for accepting materials. The CONTRACTOR is responsible for making the necessary arrangements to utilize the facility and the alternate facility must be approved in writing by the ENGINEER in the same manner and with the same requirements as the original facility before the contaminated soil is removed from the site.

PART 2 PRODUCTS (NOT USED)

PART 3 EXECUTION

3.1 PERSONNEL PROTECTIVE EQUIPMENT

A. Personnel protective equipment used during construction activities shall be disposed in a solid/hazardous waste disposal facility approved by the ENGINEER.

3.2 VEHICLE DECONTAMINATION CLEANLINESS

A. No vehicles shall leave the areas of disturbance until they are properly inspected and approved by the CONTRACTOR's Health and Safety Officer and ENGINEER for general cleanliness of frame and tires.

B. No vehicle shall leave the site unless it is in a clean condition, free of loose dirt or loose material on tailgates, axles, wheels, etc.

C. No vehicle shall leave the site with impacted soil unless the material is tightly covered/tarped so that no material/dust is able to blow off and/or drop off.

D. Loading and transportation of impacted soil shall be conducted in a manner as to eliminate all dust.

E. All personnel, equipment, and trucks shall enter and exit the site from one common location. Prior to exiting the site, all decontamination requirements of these Specifications and the site Health and Safety Plan shall be met.

F. In the event that impacted soil is spilled from the truck during transportation the CONTRACTOR shall take the following steps.
   1. If impacted soil is spilled on-site, outside of the limits of disturbance, the CONTRACTOR shall immediately notify the ENGINEER. The CONTRACTOR is responsible for immediate removal of the impacted soil and cleaning the area to the satisfaction of the ENGINEER, PROPERTY OWNER, and OWNER.
   2. If impacted soil is spilled off-site, the CONTRACTOR shall immediately notify the ENGINEER, OWNER, and the local fire and police departments. The appropriate cleanup activities shall be coordinated without delay with these authorities.

   The CONTRACTOR shall bear full responsibility for any required clean up of all spilled, impacted soil. All clean up and remediation activities associated with spilled materials shall be performed at no extra cost to the ENGINEER or OWNER.

3.3 TRANSPORTATION LOG

A. The CONTRACTOR shall maintain at the site a log of vehicles leaving the site with impacted soil or other materials. The log shall indicate the vehicle identification number, date and time of departure, and approximate volume or quantity of material carried.

END OF SECTION

SECTION 02290

EROSION AND SEDIMENT CONTROL

PART 1 GENERAL

1.1 DESCRIPTION

A. The Work covered by this Section consists of furnishing all materials, equipment, tools and labor to construct and maintain appropriate temporary erosion and sediment control systems to limit sediment runoff to surface water and to maintain compliance with the applicable state and federal regulations and temporary construction permits for the project.

B. The CONTRACTOR shall furnish and install sediment and erosion and control materials as required based on the site requirements, permit requirements, state and federal regulations, and weather and seasonal conditions.

C. The Work to be performed may include, but is not limited to: silt fences, hay bales, erosion control matting, check dams with rip-rap stone placement and site surface drainage.

1.2 RELATED WORK

A. Section 01110 - Environmental Protection Procedures.

B. Section 02200 - Earthwork.

C. Section 02232 - Granular Materials.

1.3 SUBMITTALS

A. Product data shall be submitted as indicated in Section 01300 - SUBMITTALS. The CONTRACTOR shall submit manufacturer's product data to the ENGINEER for approval a minimum of one (1) week prior to installation.

PART 2 PRODUCTS

2.1 SURFACE-WATER CONTROL MATERIALS

A. Silt Fence: The CONTRACTOR shall supply silt fence in sufficient quantities to control surface-water runoff and sediment. Silt fence shall be replaced at a frequency consistent with the manufacturer's directions, or as directed by the ENGINEER. Acceptable silt fence material shall be Mirafi 100X or approved equal.

B. Erosion Control Matting: The CONTRACTOR shall install and supply erosion control matting in sufficient quantities to control surface-water runoff and sediment. The CONTRACTOR shall install erosion control matting in accordance with these Specifications and installation instructions provided by the manufacturer or on the Drawings, or as directed by the ENGINEER. Acceptable erosion control matting material shall be as follows:

1. On slopes 3H:1V or greater: Curlex I, rated for 1.55 psf shear stress and 5.0 fps velocity; or an approved equal.

PART 3 EXECUTION

3.1 HANDLING

A. Materials shall be handled in such a manner as to prevent damage to the material. Materials shall not be dropped or dragged over the ground. Any materials damaged shall be replaced at no expense to the OWNER.

3.2 SURFACE WATER CONTROL STRUCTURES

A. Silt Fence: The CONTRACTOR shall install silt fence in accordance with these Specifications and installation instructions provided by the manufacturer or on the Drawings, or as directed by the ENGINEER.

B. Straw Bales: The CONTRACTOR shall install straw bales in the locations indicated on the Drawings, or as directed by the ENGINEER.

C. Erosion Control Matting: The CONTRACTOR shall install and supply erosion control matting in sufficient quantities to control surface-water runoff and sediment. This shall include installation of erosion control matting in all of the graded and disturbed areas after placement of seed. The CONTRACTOR shall install erosion control matting in accordance with these Specifications, installation instructions provided by the manufacturer, as noted on the Drawings, and/or as directed by the ENGINEER.

END OF SECTION

SECTION 02511

ASPHALT PAVING

PART 1 GENERAL

1.1 DESCRIPTION

A. General: Provide all materials, labor, equipment and services and perform all operations in connection with asphalt paving complete, in accordance with the Drawings and Specifications.

B. Asphalt paving shall be completed at locations as shown on the drawings or to replace damaged or removed asphalt with equivalent materials.

1.2 RELATED WORK

A. Section 01010 -Summary of Work.

B. Section 01300 - Submittals.

C. Section 02200 - Earthwork.

1.3 REFERENCES

A.	The Asphalt Institute	Manual MS-4 - The Asphalt Handbook.
B.	The Asphalt Institute	Manual MS-13 - Asphalt Surface Treatments and Asphalt Penetration Macadam.
C.	AASHTO M-226	Standard Specification for Viscosity-Graded Asphalt Cement.
D.	ASTM D-698	Standard Test Methods for Laboratory Compaction Characteristics of Soil Using Standard Effort.
E.	ASTM D-946	Asphalt Cement for Use in Pavement Construction.
F.	ASTM D-977	Standard Specification for Emulsified Asphalt.
G.	ASTM D-1557	Standard Test Methods for Laboratory Compaction Characteristics of Soil Using Modified Effort.
H.	ASTM D-2397	Standard Specification for Cationic Emulsified Asphalt.
I.	ASTM D-3666	Standard Specification for Minimum Requirements for Agencies Testing and Inspecting Road and Paving Materials.

1.4 SUMMARY

A. This Section includes the following:
   1. Hot-mix asphalt paving.
   2. Hot-mix asphalt patching.
   3. Hot-mix asphalt overlays.

1.5 SYSTEM PERFORMANCE

The CONTRACTOR shall:

A. Provide hot-mix asphalt pavement according to the materials, workmanship, and other applicable requirements of the standard specifications of NYSDOT.

B. Paving shall withstand the anticipated short-term daily use by construction equipment during remedial activities at the site.

1.6 SUBMITTALS

A. Make all submittals required under this Section in conformance with Section 01300 - SUBMITTALS.

B. Product Data: For each product specified. Include technical data and tested physical and performance properties.

C. Job-Mix Designs: Certification, by authorities having jurisdiction, of approval of each job mix proposed for the Work.

D. Qualification Data: For firms and persons specified in Part 1.07 to demonstrate their capabilities and experience, include lists of completed projects with project names and addresses, names and addresses of architects and owners, and other information specified.

E. Material Certificates: Certificates signed by manufacturers certifying that each material complies with requirements.

1.7 QUALITY ASSURANCE

A. Installer Qualifications: Engage an experienced installer who has completed hot-mix asphalt paving similar in material, design, and extent to that indicated for this project and with a record of successful in-service performance.

B. Manufacturer Qualifications: Engage a firm experienced in manufacturing hot-mix asphalt similar to that indicated for this Project and with a record of successful in-service performance.

C. Testing Agency Qualifications: Demonstrate to the ENGINEER's satisfaction, based on criteria conforming to ASTM D-3666, that the independent testing agency has the experience and capability to satisfactorily conduct the testing indicated without delaying the Work.
   1. Firm shall be a registered and approved paving mix manufacturer with authorities having jurisdiction, or with the NYSDOT.

D. Regulatory Requirements: Conform to applicable local regulations for asphalt paving work on private property.

E. Asphalt-Paving Publication: Comply with Asphalt Institute's "The Asphalt Handbook," except where more stringent requirements are indicated.

1.8 DELIVERY, STORAGE, AND HANDLING

A. Deliver pavement-marking materials to project site in original packages with seals unbroken and bearing manufacturer's labels containing brand name and type of material, date of manufacture, and directions for storage.

B. Store pavement-marking materials in a clean, dry, protected location and within temperature range required by manufacturer. Protect stored materials from direct sunlight.

1.9 PROJECT CONDITIONS

A. Environmental Limitations: CONTRACTOR shall not apply asphalt materials if substrate is wet or excessively damp or if the following conditions are not met:
   1. Prime and Tack Coats: Minimum surface temperature of 2.60 deg F (29 deg C).
   2. Asphalt Base Course: Minimum surface temperature of 40 deg F (4 Deg C) and rising at time of placement.
   3. Asphalt Surface Course: Minimum surface temperature of 60 deg F (15.5 deg C) at time of placement.

PART 2 PRODUCTS

2.1 AGGREGATES

A. General: Use materials and gradations that have performed satisfactorily in previous installations.

B. Coarse Aggregate: Sound; angular crushed stone; crushed gravel; or properly cured, crushed blast-furnace slag; complying with NYSDOT standard specifications.

C. Fine Aggregate: Shall consist of crushed stone, washed gravel (crushed or uncrushed), crushed slag, or any combination thereof; complying with NYSDOT standard specifications.

D. Mineral Filler: Rock or slag dust, hydraulic cement, or other inert material complying with NYSDOT standard specifications.

2.2 ASPHALT MATERIALS

A. Asphalt Cement: AASHTO M-226, Table 2 for viscosity-graded material.

B. Prime Coat: Asphalt emulsion prime conforming to NYSDOT standard specifications.

C. Tack Coat: ASTM D-977, emulsified asphalt or ASTM D-2397, cationic emulsified asphalt, slow setting, factory diluted in water, of suitable grade and consistency for application.
   1. Emulsified asphalt Grade CBAE Primer or SS-1, or SS-1h.
   2. Cationic emulsified asphalt Grade CSS-1 or CSS-1h.

D. Water: Potable.

2.3 MIXES

A. Hot-Mix Asphalt: Provide dense, hot-laid, hot-mix asphalt plant mixes approved by authorities having jurisdiction; designed according to procedures in AI's "Mix Design Methods for Asphalt Concrete and Other Hot-Mix Types;" and complying with the following requirements:

1. Provide mixes with a history of satisfactory performance in geographic area where Project is located.
2. Binder Course: NYSDOT Item No. 402.255902 25 F9 Binder Course HMA.
3. Surface Course: NYSDOT Item No 402.12510212.5 F1 Top Course HMA.

PART 3 EXECUTION

3.1 3.1 INSPECTION

The CONTRACTOR shall:

A. Verify that subgrade is dry and in suitable condition to support paving and imposed loads.

B. Proof-roll subbase using heavy, pneumatic-tired rollers to locate areas that are unstable or that require further compaction.

C. Notify the ENGINEER in writing of any unsatisfactory conditions. The CONTRACTOR shall not begin paving installation until these conditions have been satisfactorily corrected.

D. Verify that the compacted granular material or crushed stone base has been properly prepared and is dry and ready to support paving and imposed loads. The base shall be compacted in 6-inch lifts to 95 percent of the maximum dry density using Standard Proctor compaction effort (ASTM D-698).

E. Verify gradients and elevations of the base are correct prior to placing the asphaltic concrete mix.

F. Accept the granular material or crushed stone base as suitable prior to the installation of asphalt.

3.2 SURFACE PREPARATION

A. General: Immediately before placing asphalt materials, remove loose and deleterious material from substrate surfaces. Ensure that prepared subgrade is ready to receive paving.
   1. Sweep loose granular particles from surface of unbound-aggregate base course. Do not dislodge or disturb aggregate embedded in compacted surface of base course.

B. Prime Coat: Apply uniformly over surface of compacted-aggregate base at a rate of 0.15 to 0.50 gal./sq. Apply enough material to penetrate and seal, but not flood surface. Allow prime coat to cure to 72 hours minimum.
   1. If prime coat is not entirely absorbed within 24 hours after application, spread sand over surface to blot excess asphalt. Use only sufficient sand to prevent pickup under traffic. Remove loose sand by sweeping before pavement is placed and after volatiles have evaporated.
   2. Protect primed substrate from damage until ready to receive paving.

3.3 HOT-MIX ASPHALT PLACING

A. Machine place hot-mix asphalt mix on prepared surface, spread uniformly, and strike off. Place asphalt mix by hand to areas inaccessible to equipment in a manner that prevents segregation of mix. Place each course to required grade, cross section, and thickness, when compacted.
   1. Place hot-mix asphalt base course in a single lift.
   2. Place hot-mix asphalt surface course in a single lift.
   3. Spread mix at minimum temperature of 250 deg F (121 deg C).

4. Begin applying mix along centerline of crown for crowned sections and on high side of one-way slopes, unless otherwise indicated.
5. Regulate paver machine speed to obtain smooth, continuous surface free of pulls and tears in asphalt-paving mat.

B. Promptly correct surface irregularities in paving course behind paver. Use suitable hand tools to remove excess material forming high spots. Fill depressions with hot-mix asphalt to prevent segregation of mix; use suitable hand tools to smooth surface.

3.4 JOINTS

A. Construct joints to ensure continuous bond between adjoining paving sections. Construct joints free of depressions with same texture and smoothness as other sections of hot-mix asphalt course.
1. Clean contact surfaces and apply tack coat.
2. Offset longitudinal joints in successive courses a minimum of 6 inches.
3. Offset transverse joints in successive courses a minimum of 24 inches.
4. Construct transverse joints by bulkhead method or sawed vertical face method as described in AI's "The Asphalt Handbook."
5. Compact joints as soon as hot-mix asphalt will bear roller weight without excessive displacement.
6. Compact asphalt at joints to a density within 2 percent of specified course density.

3.5 COMPACTION

A. General: Begin compaction after the bituminous mixture has been spread, struck off, and surface irregularities adjusted, in accordance with NYSDOT standard specifications.
1. Complete compaction before mix temperature cools to 185 degrees F (85 degrees C).

B. Asphalt used shall have a minimum field density of 95 percent of the required laboratory density (Marshall Method) for the mixes used.

C. Edge Shaping: While surface is being compacted and finished, trim edges of pavement to proper alignment. Bevel edges while still hot, with back of rake or smooth iron. Compact thoroughly using tamper or other satisfactory method.

D. Repairs: Remove paved areas that are defective or contaminated with foreign materials. Remove paving course over area affected and replace with fresh, hot-mix asphalt. Compact by rolling to specified density and surface smoothness.

E. Protection: After final rolling, do not permit vehicular traffic on pavement until it has cooled and hardened.

F. Erect barricades to protect paving from traffic until mixture has cooled enough not to become marked.

3.6 INSTALLATION TOLERANCES

A. Thickness: Compact each course to produce the thickness indicated within the tolerances specified in NYSDOT standard specifications.

B. Surface Smoothness: Compact each course to produce a surface smoothness within the tolerances specified in NYSDOT standard specifications.

3.7 FIELD QUALITY CONTROL

A. Testing Agency: CONTRACTOR will engage a qualified independent testing agency to perform field inspections and tests and to prepare test reports.
   1. Testing agency will conduct and interpret tests and state in each report whether tested Work complies with or deviates from specified requirements.

B. Additional testing, at CONTRACTOR's expense, will be performed to determine compliance of corrected Work with specified requirements.

C. Thickness: In-place compacted thickness of hot-mix asphalt courses will be determined according to NYSDOT standard specifications.

D. Surface Smoothness: Finished surface of each hot-mix asphalt course will be tested for compliance with smoothness tolerances, according to NYSDOT standard specifications.

E. In-Place Density: Samples of uncompacted paving mixtures and compacted paving will be secured by testing agency according to NYSDOT standard specifications.

F. Remove and replace or install additional hot-mix asphalt where test results or measurements indicate that it does not comply with specified requirements.

3.8 REPAIR

The CONTRACTOR shall repair all damage to new and existing asphaltic paving which occurs during the execution of the Work.

END OF SECTION

THIS PAGE INTENTIONALLY LEFT BLANK

SECTION 02901

MISCELLANEOUS WORK AND SITE CLEANUP

PART 1 GENERAL

1.1 SCOPE OF WORK

A. Furnish all labor, materials, equipment, and incidentals required to perform miscellaneous Work not specified in other Sections, but necessary for the proper completion of the Work as shown on the Drawings.

B. When applicable, the CONTRACTOR shall perform the Work in accordance with other Sections of these Specifications. When no applicable specification exists, the CONTRACTOR shall perform the Work in accordance with established industry practice and/or as directed by the ENGINEER.

C. The Work of this Section includes, but is not limited to, the following:
   1. Clean up.
   2. Incidental work.
   3. Restoration of disturbed areas.
   4. Restoring easement and right-of-ways.
   5. Temporary facilities.
   6. Protection of existing underground utilities.

PART 2 PRODUCTS

2.1 MATERIALS

A. Materials required for this section shall be the same quality of materials that are to be restored. Where possible, the CONTRACTOR may re-use existing materials that are removed subject to the approval of the ENGINEER.

B. Products and materials shall be subject to approval by the OWNER. PART 3

EXECUTION

3.1 CLEAN UP

A. The CONTRACTOR shall remove all construction material, excess excavation, buildings, equipment and other debris remaining on the project except as otherwise specified, as a result of construction operations and shall restore the site of the work to a neat and orderly condition.

B. During the course of the WORK, the CONTRACTOR shall keep the site of operations in as clean and neat a condition as is possible. CONTRACTOR shall dispose of all residue resulting from the construction work.

C. At the completion of the WORK, and at a time scheduled with the OWNER as necessary, the CONTRACTOR shall:
   1. Remove waste materials, rubbish, tools, equipment, machinery, and surplus materials.
   2. Remove grease, dust, dirt, stains, labels, and other deleterious or foreign materials from project area.

3. Repair, patch, and touch up marred or otherwise damaged surfaces.
4. Prior to handing over the completed project, conduct an inspection of surfaces, and all work areas, to verify that the entire site is in an orderly condition.

D. In order to prevent environmental releases arising from the construction activities related to the performance of this project, the CONTRACTOR and Subcontractors shall comply with all applicable federal, state and local laws and regulations concerning waste material disposal, as well as the specific requirements stated in this section and elsewhere in these Specifications.

E. The CONTRACTOR is advised that the disposal of excess excavated material in wetlands, stream corridors, and plains is strictly prohibited. Any violation of this restriction by the CONTRACTOR or any employee, will be brought to the immediate attention of the responsible regulatory agencies, with a request that appropriate action be taken against the offending parties. Therefore, the CONTRACTOR will be required to remove the fill and restore the area impacted without additional cost to the OWNER.

3.2 INCIDENTAL WORK

A. The CONTRACTOR shall perform all incidental work not otherwise specified, but necessary to the proper completion of the Work as specified and as shown on the Drawings.

3.3 RESTORING EASEMENTS AND RIGHT-OF-WAYS

A. Existing vegetated surfaces damaged by construction shall be replaced. The CONTRACTOR shall restore the areas with an equivalent depth and quality of loam, seed and fertilizer as necessary to produce a stand of grass at least equal to that existing prior to construction. These areas shall be maintained and re-seeded, if necessary, until the Work has been completed and accepted. Any additional Work required to restore property to the original condition shall be performed by the CONTRACTOR at no additional expense to the OWNER.

3.4 PROTECTION OF EXISTING UNDERGROUND UTILITIES

A. Underground utilities (telephone, sewer, culverts, etc.) may exist within the project area. Locations of these utilities may or may not be shown on the Drawings. Prior to starting work the CONTRACTOR shall be responsible for determining utility locations by contacting the utility owners.

B. The CONTRACTOR shall cooperate with the OWNER, and other utility companies, and shall not allow utility service to be disrupted or relocated without the permission of the ENGINEER and the written permission of the utility owner.

C. In the event that an existing utility must be relocated in order to avoid a conflict with the Work, the CONTRACTOR shall notify the ENGINEER and the OWNER promptly.

END OF SECTION

SECTION 02936

ESTABLISHMENT OF VEGETATION

PART 1 GENERAL

1.1 WORK INCLUDED

A. The Work covered by this Section consists of furnishing all equipment, tools, materials, and labor necessary for establishing temporary and permanent vegetative cover; e.g., seeding, fertilizing, and mulching, on all areas disturbed at the site, not built over, paved, or otherwise surfaced.

1.2 RELATED WORK

A. Section 01300 - Submittals.

B. Section 02200 - Earthwork.

C. Section 02290 - Erosion and Sediment Control.

1.3 REFERENCES

A. The following publications of the issues listed below form a part of this specification to the extent referenced. The publications are referenced in the text by basic designation only.
   1. U.S. DEPARTMENT OF AGRICULTURE (USDA) Federal Seed Act of 9 August 1939 (53 Stat. 1275)
   2. New York Guidelines for Urban Erosion and Sediment Control, July, 2016.

1.4 GENERAL REQUIREMENTS

A. The specified seed varieties and quantities shall be uniformly distributed over the disturbed area in such a manner that will produce an even stand of grass over the entire area seeded. The CONTRACTOR shall notify the ENGINEER at least ten (10) business days prior to seeding operations.

1.5 SOIL TEST

A. The CONTRACTOR shall perform agricultural soil tests to determine lime and fertilizer requirements for permanent seeding. Soil tests shall be performed by a recognized commercial laboratory. Test reports shall be submitted to the ENGINEER in accordance with Part 1.6 of this Section.

1.6 SUBMITTALS

A. In accordance with Section 01300 - SUBMITTALS, the CONTRACTOR shall submit the following items:
   1. Certificates of Compliance or Reports:
      a. Seed;
      b. Fertilizer;

      c. Mulch;

d. Any other soil amendments;
e. Lime; and,
f. Agricultural Soil Test Report

1.7 DELIVERY, STORAGE, AND HANDLING

A. Delivery:
1. During delivery, seed shall be protected from any drying or contamination by detrimental material.
2. Seeding material shall be inspected upon arrival at the site; unacceptable material shall be immediately removed from the site by the CONTRACTOR.
3. Fertilizer shall be delivered to the site in the original, unopened containers bearing the manufacturer's guaranteed chemical analysis, name, trade name, trademark, and conformance with State of New York and federal law.

B. Storage:
1. Seed and fertilizer shall be stored in cool, dry locations away from contaminants.
2. Pesticides and herbicides shall not be stored with other landscape materials and shall be handled and stored following manufacturer's directions.
3. Materials shall be stored in areas designated or approved by the ENGINEER.

1.8 GUARANTEE

A. One year from substantial completion of the project or acceptance of planting whichever is later. At no additional cost to the OWNER, the CONTRACTOR shall replace ground cover that is dead or that is, in the opinion of the ENGINEER, in an unhealthy or unsightly condition. All replacement planting is to be done no later than the next planting season from the time at which the ENGINEER directs the CONTRACTOR to replace the planting or during the current season. Planting shall be replaced as often as directed by the ENGINEER within the guarantee period.

PART 2 PRODUCTS

2.1 SEED

A. Seed shall be of the latest season's crop and shall be delivered in original sealed packages bearing the producer's guaranteed analysis for percentages of mixtures, purity, germination, weed-seed content, and inert material. Labels shall conform with USDA Federal Seed Act, Rules & Regulations and applicable State of New York seed laws. Wet, moldy, or otherwise damaged seed will be rejected.

B. Seed mixtures shall be in accordance with the recommendations of the New York Guidelines for Urban Erosion and Sediment Control.

C. Seed shall be furnished and delivered premixed in the proportions specified. All seed shall comply with state and federal seed laws.

D. A manufacturer's Certificate of Compliance to the specifications shall be submitted by the manufacturers with each shipment of each type of seed. These certificates shall include the guaranteed percentages of purity, weed content and germination of the seed, and also the net weight and date of shipment. No seed may be sown until the CONTRACTOR has submitted the certificates.

2.2 TOPSOIL

A. Topsoil shall contain a sufficient amount of organic material to promote the growth of vegetation. Topsoil shall conform to the requirements contained in Section 02200. Additives, which may be deemed necessary by the CONTRACTOR, shall be submitted to the ENGINEER for review and approval.

2.3 MULCH

A. Mulch shall be straw such as stalks of oats, wheat, rye or other approved crops which are free from noxious weeds. Weight of straw shall be calculated on the basis of the material having not more than 15 percent moisture content.

B. Hydro-Mulch Overspray Tackifier shall be the same as, or equal to, a recycled slick paper (containing wood cellulose and kaolinite clay), shall not contain any growth or germination-inhibiting factors, and shall be dyed an appropriate color to facilitate visual metering during application. Slick paper composition on air-dry weight basis: 8 percent moisture maximum, pH 4.5 to 6.5. When added to water, it shall form a homogenous slurry specifically for use in hydraulic mulching equipment. This material when sprayed on the straw mulch becomes a tackifier/binder and provides a stable bed for seed germination.

2.4 MISCELLANEOUS MATERIALS

A. Aluminum Sulfate (if required by soil analysis): Commercial grade, unadulterated and delivered in containers with the name of the material, name of the manufacturer, net weight of contents.

B. Limestone (if required by soil analysis): Agricultural grade limestone ground to pass an 8-mesh with 25 percent passing a 100-mesh sieve shall be furnished. In addition calcareous limestone shall contain not less than 50 percent calcium oxide, and dolomitic limestone shall contain not less than 40 percent magnesium oxide. Coarser materials will be acceptable provided the specified rates of application are increased proportionately, on the basis of quantities passing the 8- and 100- mesh sieves, but no additional payment will be made for the increased quantity.

C. Sand (if required): Sand shall be a coarse builders'-type sand with no particles greater than a 2 mil diameter, with 30% to 50% passing a 100-mesh sieve, and zero passing a 200-mesh sieve.

D. Water: Water shall be free from ingredients harmful to plant life. The CONTRACTOR shall provide the ENGINEER with the source and an analysis of the water proposed for use. Hose and other watering equipment shall be furnished by lawn and planting contractor.

E. Fertilizer: Commercial complete standard product complying with state and federal fertilizer laws:
   1. Deliver to site in original unopened containers with manufacturer's guaranteed statement of analysis or furnish Landscape Architect with manufacturer's certificate of compliance covering analysis.
   2. Application of fertilizer shall be as recommended by topsoil analysis.

3. Fertilizer composition by weight:

Nitrogen	10% minimum
Available Phosphoric Acid (K205)	6% minimum
Water Soluble Potash	4% minimum

4. At least 50% by weight of the nitrogen content shall be derived from organic materials.
5. Fertilizer shall be uniform in composition, free-flowing and suitable for application with approved equipment.

F. Anti-Desiccant: A liquid which upon drying must produce a gas permeable, but water retarding, colorless file having a moisture vapor transmission value of not more than 2.5 in accordance with ASTM E-96. "Wilt pruf", manufactured by Nursery Specialty Products, Inc., Greenwich, Connecticut, or approved equal.

PART 3 EXECUTION

3.1 DATES FOR SEEDING

A. Seeding shall proceed in accordance with the New York Guidelines for Urban Erosion and Sediment Control. The optimum seeding period is between March 1 and April 15. The extended seeding periods are between November 15 and June 15, and between August 15 and September 15.

B. Temporary seeding shall be performed when exposed soil surfaces are anticipated not to be disturbed for a period of 45 days to one year, or as directed by the ENGINEER.

C. Permanent seeding shall be performed when exposed soil surfaces are not anticipated to be disturbed for periods up to one year or upon completion of all site work.

D. It is not recommended that seeding or planting occur during summer months, but millet may be used as a nurse crop during that time.

3.2 SODDING OF LAWNS

A. General: All turf areas shall be seeded. The CONTRACTOR shall at its own expense till, fine grade, fertilize, mulch, and seed or sod as necessary any and all disturbed areas destroyed by its work operations, equipment or materials storage.

B. There must be sufficient grade stakes as determined by the ENGINEER to ensure correct line and grade of subgrade and of finished grade.

C. Sod shall be bluegrass or a bluegrass/red fescue mixture.

D. Sodding:
1. Moisten the soil surface with a fine spray immediately before laying sod.
2. Laying: Fit sod pieces tightly together so that no joint is visible, and tamp firmly or roll with lightweight turf roller so as to eliminate all air pockets, provide a true and even surface, and insure knitting without displacement of sod or deformation of the surface of sodded areas. Following compaction, screened topsoil shall be used to fill all cracks between sods. Excess soil shall be worked into the grass. Stakes, splits or pegs shall be used on all sod strips on pitches in sufficient number to insure the stability of the sod.
3. Watering: Within five (5) hours after the sod has been placed, it shall be saturated to a depth of 4 inches by watering with a fine spray.

3.3 PLANTING SEED

A. General:
   1. All areas not to be developed, paved, landscaped, or stabilized, shall be seeded with grass.
   2. The CONTRACTOR shall at its own expense till, fine grade, fertilize, seed and mulch any and all disturbed areas destroyed by its work operations, equipment or materials storage.

B. Topsoil shall be placed only after the subgrade has been shaped and brought to the grades, lines and cross sections required. Clear the subgrade of stones over 3 inches in size, construction debris and objectionable material. Excavate to at least 12 inches and backfill with acceptable earth material any subgrade area that has become contaminated with oil, gasoline or bituminous products.

C. After topsoil has been tested and approved, apply to all areas to be seeded and sodded to a minimum depth of 12 inches.

D. Fine Grading: Previously established grades shall be maintained on the areas to be seeded, in a true and even condition; necessary repairs shall be left in an even and properly compacted condition to prevent formation of depressions. Finished grade shall be such that after subsequent treatments, i.e., tillage, topsoiling, and planting, the planted grade will be flush with adjoining surfaced grade of all paved areas. Topsoil shall be placed and spread over approved areas to a depth sufficiently greater than 12 inches so that after natural settlement and light rolling, the completed Work will conform to the lines, grades, and elevations shown on the plans.

E. Application of Soil Additives for Topsoil:
   1. Applying Ground Limestone (if required by soil analysis): After topsoil has been spread and graded, apply ground limestone at the rate of 100 lb per 1,000 sq. ft.
   2. Applying Fertilizer: Commercial 5-10-10 fertilizer shall be applied within one week before the seeding at the rate of 14 pounds per 1,000 square feet, and then harrowed into the top 3 inches of the soil. Complete fertilizer with a 2-1-1 ratio shall be applied and thoroughly watered in immediately after the first cutting of the grass at the rate of 20 pounds per 1,000 square feet.
   3. Applying Aluminum Sulfate (if required by soil analysis): After topsoil has been spread and graded, apply Aluminum sulfate at the rate of 40 pounds per 1,000 square feet.

F. Sowing of Grass Seed: Immediately before any seed is sown, the ground shall be scarified, harrowed, raked and broomed until the surface is smooth and of uniformly fine texture. No seeding shall be done during windy weather. Seeding shall be done in two directions at right angles to each other. Sow seed evenly by hand or with an approved mechanical seeding device in the proportions and at the rate per unit area heretofore specified. Hydroseeding will be acceptable. The sown seed shall be covered with a 1/4" thin layer of topsoil by light raking or other approved method, rolled in both directions with a hand roller weighing not more than 100 pounds per foot of width, and watered with a fine spray. CONTRACTOR shall exercise the necessary precautions to keep the area undisturbed until the grass is established.

   Application Rate of Grass Seed: 200 pounds/acre.

G. Spread mulch at a rate of 90 lb per 1,000 sq. ft. Exercise care to leave seeded surface with minimum amount of damage. Remove mulch after grass is established.

H. Apply wood fiber and liquid mulch binder immediately after hydroseeding, applied at a rate of 11-17 pounds/1,000 sq. ft. Terr Tack liquid binder, or approved equal.

3.4 PROTECTION AND CLEANUP

A. After seeding and mulching operations have been completed, barricades and approved warning signs shall be erected by the CONTRACTOR as required to provide protection against traffic and trespass. Excess material from seeding and mulching operations, and all debris, shall be cleaned up and disposed off-site by CONTRACTOR, unless otherwise directed by the ENGINEER.

END OF SECTION

DIVISION 3

DIVISION 3 - CONCRETE

SECTION 03301

CAST-IN-PLACE CONCRETE

PART 1 GENERAL

1.1 RELATED DOCUMENTS

A. Drawings and general provisions of the Contract, including General Conditions, Supplementary Conditions (if included), and Division 1 Specifications Sections, apply to this Section.

1.2 SECTION INCLUDES

A. Formwork for cast-in-place concrete.

B. Openings for other work.

C. Form accessories.

D. Reinforcing steel bars, wire fabric and accessories for cast-in-place concrete.

E. Cast-in-place concrete.

F. Finishing and curing of horizontal and vertical concrete surfaces.

1.3 RELATED WORK

A. Section 05501 Anchor Bolts and Anchors
B. Section 07920 - Joint Sealants.

1.4 REFERENCES

A. ACI 301 - Specifications for Structural Concrete.

B. ACI 304R - Measuring, Mixing, Transporting and Placing Concrete.

C. ACI 305R - Hot Weather Concreting.

D. ACI 306R - Cold Weather Concreting.

E. ASTM A185 - Steel Welded Wire Reinforcement, Plain, for Concrete.

F. ASTM A615 - Deformed and Plain Carbon-Steel Bars for Concrete Reinforcement.

G. ASTM A616 - Rail-Steel Deformed and Plain Bars for Concrete Reinforcement.

H. ASTM C33 - Concrete Aggregates.

I. ASTM C150 - Portland Cement.

J. ASTM C260 - Air-Entraining Admixtures for Concrete.

K. ASTM C309 - Liquid Membrane-Forming Compounds for Curing Concrete.

L. ASTM C494 - Chemical Admixtures for Concrete.

M. ASTM C618 - Coal Fly Ash and Raw or Calcined Natural Pozzolan for Use in Concrete.

N. ASTM C881 - Epoxy-Resin-Base Bonding Systems for Concrete.

O. ASTM D994 - Preformed Expansion Joint Filler for Concrete (Bituminous Type).

P. ASTM D1752 - Preformed Sponge Rubber Cork and Recycled PVC Expansion Joint Fillers for Concrete Paving and Structural Construction.

1.5 ADJUSTMENT PRICE - MEASUREMENT AND PAYMENT

A. Providing of cast-in-place concrete and reinforcing steel in addition to that shown or specified at the written direction of ENGINEER will be paid for at the appropriate adjustment prices included in the Contract or, if not included, at prices mutually agreed upon by OWNER and CONTRACTOR, and the Contract Price will be adjusted by Change Order.

1.6 QUALITY ASSURANCE

A. Comply with ACI 301 unless specifically noted otherwise.

1.7 DEFINITIONS

A. Exposed: Exposed to view by persons responsible for operation or maintenance of the structure.

1.8 SUBMITTALS

A. Submit complete sets of shop drawings of all items to be furnished under Section 03301 n accordance with Section 01300, including:
   1. Concrete Mix Design, including all batch materials and test data showing conformance with ACI 301.4.2
   2. Reinforcing steel details.
   3. Waterstop.
   4. Membrane curing compound.
   5. Joint filler material.

PART 2 PRODUCTS

2.1 FORM MATERIALS

A. Forms for Exposed Finish Concrete: Plywood, metal, metal-framed plywood faced, or other acceptable panel-type materials, to provide continuous, straight, smooth, exposed surfaces. Furnish in largest practicable sizes to minimize number of form marks.
   1. Plywood: U.S. Product Standard PS-1 "B-B (Concrete Form) Plywood", Class I, Exterior Grade or better, mill-oiled and edge-sealed, with each piece bearing legible inspection trademark.

B. Forms for Unexposed Finish Concrete: Plywood, lumber, metal, or other acceptable material. Provide lumber dressed on at least two edges and one side for tight fit.

C. Form Ties: Factory-fabricated removable or snap-off metal type designed to prevent form deflection and to prevent spalling concrete upon removal. Units to leave no metal closer than 1 inch to surface.

D. Preformed Plastic Adhesive Waterstop (PPAWS): Federal Specification SS-SS-210A; single-component, self-sealing plastic adhesive type, extruded rope form between two protective silicone treated papers, 1 inch square cross section, 1 inch lap splice, furnish with primer; Synko-Flex Products Synko-Flex, or as approved.

E. Form Release Agent: Colorless mineral oil which will not stain concrete or absorb moisture, or impair natural bonding or color characteristics of coating intended for use on concrete including curing compound, sealer, or water-proofing.

2.2 REINFORCEMENT

A. Reinforcing Steel: ASTM A615, 60 ksi yield grade, deformed billet steel bars, unfinished; or ASTM A616, 60 ksi yield grade, deformed rail steel bars, unfinished.

B. Welded Wire Fabric: ASTM A185, plain wire, sheet form. Rolled fabric not permitted.

2.3 CONCRETE MATERIALS AND ADMIXTURES

A. Cement: ASTM C150, Type I or II.

B. Fine and Coarse Aggregates: ASTM C33 (normal weight aggregate); materials containing deleterious substances (spalling causing) are not acceptable.

C. Water: Clean and not detrimental to concrete.

D. Air Entrainment: ASTM C260; Master Builders Micro-Air, or as approved.

E. Chemical: ASTM C494 Type A - Water-Reducing, Type B - Retarding, Type D - Water-Reducing and Retarding, Type F - Water-Reducing, High Range, Type G - Water-Reducing, High Range and Retarding; containing no chlorides; Master Builders, W.R. Grace, or as approved.

F. Fly Ash: ASTM C618 Class F or C; loss on ignition less than 3 percent.

2.4 CURING MATERIALS

A. Membrane Curing Compound: ASTM C309, Type I-D, Class B, clear with fugitive dye which disappears approximately 24 hours after exposure to sunlight; Spray-Cure Safe Cure Clear, Euclid Chemical Company Kurez DR, or as approved. Curing compound shall be compatible with coatings which are to be applied to the concrete surface.

B. Absorptive Mats: Burlap-polyethylene, minimum 8 ounces per square yard bonded to prevent separation during handling and placing.

C. Water: Potable, not detrimental to concrete.

2.5 ACCESSORIES

A. Vapor Retarder: 10 mil thick clear polyethylene film.

B. Non-Shrink Grout: Pre-mixed compound consisting of non-metallic aggregate, cement, water reducing and plasticizing agents; capable of developing minimum compressive strength of 5,000 psi in 28 days; Master Builders Masterflow 713, or as approved.

C. Adhesive Dowels
   1. Dowels shall comply with ASTM A615
   2. .Adhesive: Follow 05501 Anchor Bolts and Anchors.

D. Joint Filler Type B: ASTM D1752, pre-molded sponge rubber fully compressible with recovery rate of minimum 95 percent; W.R. Meadows Sponge Rubber, or as approved.

2.6 CONCRETE MIX

A. Concrete Proportions: Comply with ACI 301, 4.2.

B. Class I Concrete: Provide concrete to the following criteria:
   1. Compressive Strength (7 Day): 3,200 psi.
   2. Compressive Strength (28 Day): 4,000 psi.
   3. Water/Cement Ratio (Maximum): 0.45 by weight.
   4. Air Entrained: 6 percent, ±1 percent.
   5. Fly Ash Content: Maximum 25 percent of cement content.
   6. Slump (Maximum): 3 inches (due to water).
   7. Mid or High Range Water Reducer: Add at Site to increase slump to 6 inches, ±1-1/2 inches.

C. Mud Mat Concrete: Provide concrete to the following criteria:
   1. Compressive Strength (28 Day): 1,000 psi.

2.7 CONCRETE SIDEWALK

A. Concrete: Class I.

B. Thickness: 4 inches.

C. Comply with NYDOT Item 608-3.01.

2.8 CONCRETE CURB

A. Concrete: Class I.

B. Comply with NYDOT Item 609-3.04.

PART 3 EXECUTION

3.1 ERECTION - FORMWORK

A. Align joints and make water-tight.

B. Coordinate with Work of other Sections in forming and placing openings, recesses, sleeves, bolts, anchors, other inserts, and components of other work.

C. Install accessories straight, level, and plumb. Ensure items are not disturbed during concrete placement.

D. Provide chamfer strips on all external corners, and on other edges as indicated.

E. Provide waterstop at all joints where shown

3.2 PLACEMENT OF REINFORCEMENT

A. Place, support, and secure reinforcement against displacement. Do not deviate from required position.

B. Unless noted otherwise, maintain concrete cover for reinforcement as follows:

Item	Coverage
Column Ties and Beam Stirrups	1-1/2 inch
Footings and Concrete Formed Against Earth	3 inch
Slabs on Fill	3 inch
All Other	2 inch

C. Lap splices to be in accordance with Lap Splice Dimension Table as indicated on Drawings.

D. Do not field-cut reinforcement without ENGINEER's permission.

3.3 GENERAL

A. Use Class I concrete for structural concrete, sidewalks, equipment bases and where indicated.

B. Install vapor retarder under interior building slabs-on-grade. Lap joints minimum 6 inches and seal water-tight by taping edges and ends.

C. Cut contraction joints within 12 hours after placement of concrete. Cut 1/4 depth of slab thickness. Locate joints as shown.

D. Slope positively floors containing sumps, gutters, or floor drains.

E. Provide 3 inch thick mud mats under foundations where indicated.

F. Construct isolation joints in slabs-on-grade as indicated. Use joint filler B and a sealant as specified in Section 07920.

G. Verify construction joints, waterstop, and reinforcement are acceptable.

H. Place epoxy grout in full accordance with manufacturer's instructions, including compressed air cleaning of all contact surfaces.

3.4 PLACING CONCRETE

A. Concrete shall be placed in accordance with ACI 304R.

B. When Class I concrete arrives at the Project with slump below 3 inches, water may be added only if neither the maximum permissible water-cement ratio nor the maximum slump is exceeded. Slump adjustment, with water, shall be made only one time.

C. Placement of concrete under water is not permitted.

D. Advise the designated testing agency not less than 24 hours before operations to allow for completion of quality tests.

E. Concrete shall be protected during cold or hot weather in accordance with ACI 305R and 306R.

3.5 CONCRETE FINISHING

A. Concrete Floor Surfaces: ACI 301, 5.3.4.2, troweled finish.
   1. Maximum Variation of Surface Flatness for Exposed Concrete Floors: 1/8 inch in 10 feet.

B. Concrete Surfaces Not Exposed: ACI 301, 5.3.3.3.a, rough form finish.

C. Exposed Formed Surfaces: ACI 301, 5.3.3.4.b, grout-cleaned finish.

3.6 CURING

A. Horizontal Surfaces: Cure floor surfaces in accordance with ACI 301 using any of the following accepted procedures.
   1. Spraying: Spray water over floor slab areas and maintain wet for 7 days.
   2. Absorptive Mat: Saturate burlap-polyethylene and place burlap-side down over floor slab areas, lapping ends and sides; maintain in place for 7 days.
   3. Membrane Curing Compound.

B. Vertical Surfaces: Cure surfaces using any of the following accepted procedures.
   1. Formwork: Keep forms in place for 7 days.
   2. Membrane Curing Compound.

3.7 FIELD QUALITY CONTROL

A. Tests of concrete slump, air content and strength will be made at the direction of ENGINEER. Samples for air content and strength should be taken as near as practical to the point of placement into the formwork or at a location which closely matches the handling conditions when the concrete is placed in the forms. Prior to the addition of a mid or high range water reducer, a slump test may be made from a sample taken from the very first concrete out of the load.

END OF SECTION

DIVISION 5

SECTION 05501

ANCHOR BOLTS AND ANCHORS

PART 1 GENERAL

1.1 RELATED DOCUMENTS

A. Drawings and general provisions of the Contract, including General Conditions, Supplementary Conditions (if included), and Division 1 Specifications Sections, apply to this Section.

1.2 SECTION INCLUDES

A. Anchor bolts cast in concrete.

B. Anchors, including expansion, sleeve, undercut, and adhesive type.

1.3 REFERENCES

A. ASTM – American Society for Testing and Materials.
1. ASTM B633 – Standard Specification for Electrodeposited Coatings of Zinc on Iron and Steel.
2. ASTM C881 – Standard Specification for Epoxy-Resin-Base Bonding Systems for Conrete.
3. ASTM F1554 – Standard Specification for Anchor Bolts, Steel, 36,55, and 105-ksi Yield Strength.

B. FS A – A 1923A - Federal Specification, Shield, Expansion; Nail Expansion, and Nail, Drive Screw (Devices, Anchoring, Masonry).

1.4 REGULATORY REQUIREMENTS

A. All Anchors shall have a current copy of valid ICC ES reports that present load-carrying capacities and installation requirements for anchor systems. Provide reports when required by Engineer.

B. Manufacturer's product data and instructions: Submit manufacturer's product data installation instructions for each anchor system product proposed for use, including bore hole cleaning procedures and adhesive injection, cure and gel time tables, and temperature ranges (storage, installation and in-service).

PART 2 PRODUCTS

2.1 ANCHOR BOLTS CAST IN CONCRETE

A. Comply with ASTM F554 for carbon steel, and ASTM F593 Type 316, stainless steel anchor bolts.

B. Headed bolt or all-thread bar with nut.

2.2 ANCHORS

A. General Requirements:
1. Anchors Exposed to Weather, in Contact with Aluminum Components, or in Submerged Conditions: Type 316 stainless steel.
2. Anchors for All Other Conditions: Zinc-plated; ASTM B633.

B. Expansion Anchors:
   1. Manufacturers:
      a. Hilti Corporation, Kwik Bolt TZ.
      b. ITW Ramset/Red Head, Trubolt Wedge Anchor.
      c. The Powers Company, Inc., Power-Stud.
      d. Or as approved.
   2. Comply with Federal Specification A-A 1923A, Type 4.
   3. Minimum Embedment: 4 inches, unless otherwise indicated.

C. Sleeve Anchors:
   1. Manufacturers:
      a. Hilti Corporation, HLC Sleeve Anchor.
      b. ITW Ramset/Red Head, Dynabolt Sleeve Anchor.
      c. The Powers Company, Inc., Lok/Bolt.
      d. Or as approved.
   2. Comply with Federal Specification FF-S-325 Group II, Type 3, Class 3.

D. Undercut Anchors:
   1. Manufacturers:
      a. Hilti Corporation, HDA Undercut Anchor.
      b. Or as approved.
   2. Minimum Embedment: 4 inches, unless otherwise indicated.

E. Adhesive Anchors:
   1. Manufacturers:
      a. Hilti Corporation, HIT RE 500-SD Epoxy
      b. ITW Ramset/Red Head, Epcon System, Ceramic 6 Epoxy.
      c. Simpson Strong Tie, Epoxy Tie SET-XP.
      d. Or as approved.
   2. Injection Gel:
      a. Two component structural epoxy.
      b. Comply with ASTM C881.
      3. Threaded Rod: Use manufacturer's standard carbon steel threaded rods unless otherwise indicated.
      4. Minimum Embedment: 4 inches unless otherwise indicated.

PART 3 EXECUTION

3.1 INSTALLATION

A. Comply with manufacturer's instructions.

END OF SECTION

SECTION 05531

METAL GRATINGS

PART 1 GENERAL

1.1 RELATED DOCUMENTS

A. Drawings and general provisions of the Contract, including General Conditions, Supplementary Conditions (if included), and Division 1 Specifications Sections, apply to this Section.

1.2 SECTION INCLUDES

A. Steel grating.

1.3 PERFORMANCE AND SIZE REQUIREMENTS

A. Design Live Load:
   1. Uniform load of 300 pounds per square foot minimum; concentrated load of 450 pounds, unless noted.

1.4 SHOP DRAWINGS

A. Submit detailed shop drawings showing thickness of grating and plan dimensions.

B. Provide span and deflection tables.

1.5 FIELD MEASUREMENTS

A. Verify that field measurements are as indicated on Shop Drawings.

PART 2 PRODUCTS

2.1 GRATING

A. Manufacturers:
   1. IKG Borden Industries
   2. Ohio Gratings, Inc
   3. Or as approved.

B. Material: Hot-Dipped galvanized steel, rectangular bearing bar spaced at 1 3/8" maximum, with flush-top cross bars welded at 4 inches c/c.

C. Thickness: As shown on Drawings, but in no case less than that as required to meet design limits.

D. Accessories:
   1. Hold-Downs: Provide lugs to secure grating to frame. Space at 18 inches cc maximum.
   2. Grating Frames:
      a. Material: hot dipped galvanized steel.
      b. Frames shall have mitered corners and welded joints and shall be sized to match grating depth.
      c. Vertical and horizontal legs of frame shape shall have 1/4 inch wall thickness. Frame shall be designed to provide a continuous slot to accommodate fasteners, and shall have a continuous extruded anchor with welded strap anchors at 16 inch cc maximum.
   3. End Banding: Same material as grating; provide across ends of bearing bars and along cut sides.

2.2 FINISHES

A. Hot-dipped galvanized.

2.3 TOLERANCES

A. Panels shall fit frames with ±1/8 inch gap.

PART 3 EXECUTION

3.1 EXAMINATION

A. Verify that opening sizes and dimensional tolerances are acceptable.

B. Verify that supports are correctly positioned.

3.2 INSTALLATION

A. Install components in accordance with manufacturer's instructions.

B. Mechanically cut finish surfaces. Do not flame cut.

C. Anchor by bolting.

D. Banding bars shall be provided at all bearing bars or crossed bars. Cut bearing bars or cross bars shall be welded to the banding bar.

END OF SECTION

THIS PAGE INTENTIONALLY LEFT BLANK

DIVISION 7

SECTION 07920

JOINT SEALANTS

PART 1 GENERAL

1.1 SUMMARY

A. Related Work
1. Section 01300 - Submittals.
2. Section 05810 - Expansion Joint Cover Assemblies.
3. Section 07430 - Composite Wall Panels (Aluminum Faced).
4. Section 09255 - Sheathing.

1.2 REFERENCES

A. Reference Standards: In addition to requirements shown or specified, comply with applicable provisions of following for design, materials, fabrication, and installation of component parts:
1. Chapter I - Joints and Chapter II - Sealants of SWRI "Sealants: The Professionals' Guide;" Sealant, Waterproofing and Restoration Institute.

B. ASTM C510 - Staining and Color Change of Single- or Multicomponent Joint Sealants.

C. ASTM C717 - Building Seals and Sealants.

D. ASTM C719 - Adhesion and Cohesion of Elastomeric Joint Sealants under Cyclic Movement (Hockman Cycle).

E. ASTM C794 - Adhesion-in-Peel of Elastomeric Joint Sealants.

F. ASTM C920 - Elastomeric Joint Sealants.

G. ASTM C1087 - Determining Compatibility of Liquid-Applied Sealants with Accessories Used in Structural Glazing Systems.

H. ASTM C1193 - Use of Joint Sealants.

I. ASTM C1248 - Staining of Porous Substrate by Joint Sealants.

J. ASTM C1330 - Cylindrical Sealant Backing for Use with Cold Liquid Applied Sealants.

K. ASTM C1519 - Evaluating Durability of Building Construction Sealants by Laboratory Accelerated Weathering Procedures.

1.3 DEFINITIONS

A. Use definitions in ASTM C717.
1. Exterior Surfaces: Total assembly, including concealed back-up. Exterior faces of walls, roofs, and other exposed building components include back-up systems and surfaces.
2. Non-Bleeding: Not capable of exuding liquid chemical components of sealant.
3. Non-Staining: Not capable of discoloring joint substrate.

4. Sealant System: Sealant, sealant backing, and primer intended for use in particular condition.

1.4 SYSTEM DESCRIPTION

A. Performance Requirements:
   1. Conform with requirements of ASTM C920, Source Quality Control specified in PART 2 of this Section, and Field Quality Control specified in PART 3 of this Section.
   2. Additional basis for failure includes staining or discoloration of sealant or of adjacent surfaces such as:
      a. Glass, gaskets or glazing accessories,
      b. Masonry, concrete, and related materials,
      c. Metals and finishes,
      d. Coatings

1.5 SUBMITTALS

A. General: Submit in accordance with Section 01300.

B. Product Data: For each product.
   1. Include data to indicate chemical characteristics, performance criteria, limitations, substrate preparation, installation requirements, and curing requirements.
   2. Include information for accessories and other required components.
   3. Include color charts indicating manufacturer's full color range available of each sealant type for Architect's initial selection.
   4. Include sample of warranty customized for this project.

C. Samples: Four 1/4 inch diameter by 2 inch long samples illustrating sealant colors for each product exposed to view.

D. Informational Submittals: Submit following packaged separately from other submittals:
   1. Test Reports: Written results of testing specified as part of Source and Field Quality Control articles.
   2. Certifications specified in Quality Assurance article.
   3. Manufacturer's Instructions. Include requirements for surface preparation, priming, joint size ratios, adhesion and compatibility testing, and perimeter conditions requiring special attention.
   4. Manufacturer's field reports.

1.6 QUALITY ASSURANCE

A. Single Source Responsibility: Provide products for each sealant system from one manufacturer for entire Project, unless otherwise acceptable to Architect.
   1. Provide products from single manufacturer to ensure material compatibility where different sealant materials come in direct contact with each other.
   2. Provide each sealant system as complete unit, including accessory items necessary for proper function.

B. Manufacturer Qualifications: Company specializing in manufacturing products specified in this Section with minimum five years documented experience.

C. Applicator Qualifications: Acceptable to manufacturer, specializing in applying sealants, with documented experience on at least five projects of similar nature in past five years.

D. Certifications: Submit following:
   1. Manufacturer's Certification that Products:
      a. Furnished for Project meet or exceed specified requirements.
      b. Components for each joint assembly are compatible with each other and with joint substrates under conditions of service and application.
      c. Are suitable for indicated use.
   2. Manufacturer's certification that sealants, primers, and cleaners, comply with local regulations controlling use of volatile organic compounds.
   3. Contractor's and installer's certification that products are installed in accordance with Contract Documents, based on inspection and testing specified in Field Quality Control.

1.7 FIELD SAMPLES

A. Sample Installation:
   1. Construct sealant joint mock-up minimum 5 feet long for elastomeric joint sealants specified in this Section.
   2. Position at locations directed.
   3. Perform "Field Hand-Pull Adhesion Test" under Field Quality Control.
   4. Accepted Field Sample: May remain part of completed Work.

1.8 PRE-INSTALLATION CONFERENCE

A. Convene pre-installation conference two weeks prior to commencing work of this Section.

B. Conference Purpose and Agenda:
   1. Visit Project site to analyze site conditions, and inspect surfaces and joints to be sealed in order that recommendations may be made should adverse conditions exist.
   2. Discuss following items:
      a. Substrate conditions.
      b. Compatibility of sealants with substrates.
      c. Adhesion and compatibility test results.
      d. Preparatory work.
      e. Weather conditions under which work will be done.
      f. Anticipated frequency and extent of joint movement.
      g. Joint design.
      h. Sealant installation procedures.

1.9 DELIVERY, STORAGE AND HANDLING

A. Deliver materials to Site in Unopened Containers and Bundles with Labels Indicating:
   1. Manufacturer's name.
   2. Product name and designation.
   3. Color.
   4. Expiration period for use.
   5. Working life.
   6. Curing time.
   7. Mixing instructions for multi-component materials.

B. Storage and Protection: Store products within manufacturer's required temperature and humidity ranges.
   1. Prior to use, condition products within manufacturer's required temperature range, humidity range, and time period.

1.10 PROJECT CONDITIONS

A. Environmental Requirements:
   1. Apply sealant when following are within manufacturer's limits during and for 24 hours after sealant installation:
      a. Ambient and surface temperatures.
      b. Relative humidity.
   2. Do not apply sealants to wet or frozen surfaces.
   3. Comply with manufacturer's requirements regarding application of sealants in vicinity of curing sealants of different material.
   4. Preformed Foam Sealants: When ambient temperature is 50° F or lower, store at room temperature for at least 24 hours prior to installation.
      a. Do not store foam seals in direct sunlight at joint location.

1.11 WARRANTY

A. Special Warranty:
   1. Warrant installed products to be free from defects in material, labor, or installation techniques for twenty years.
   2. Include Coverage for Installed Sealants and Accessories Which:
      a. Fail to achieve air tight seal.
      b. Fail to achieve watertight seal.
      c. Exhibit loss of adhesion.
      d. Exhibit loss of cohesion.
      e. Exhibit loss of color or color change.
      f. Stain adjacent surfaces.
      g. Do not cure.

PART 2 PRODUCTS

2.1 JOINT SEALANT MANUFACTURERS

A. Acceptable Preformed Foam Seal Manufacturers:
   1. Emseal Joint Systems, Ltd., Westborough, MA 01581.
   2. Polytite, Dayton-Superior Chemical Division, Oregon, IL 60161.
   3. Will-Seal Division, Illbruck, Inc.; Minneapolis, MN 55412.

B. Acceptable Silicone Joint Sealant Manufacturers:
   1. Dow Corning Corporation, Midland, MI 48686.
   2. General Electric Silicone Products Division, Waterford, NY 12188.
   3. Tremco Incorporated, Beachwood, OH 44122.

2.2 JOINT SEALANT MATERIALS

A. Interior Locations: Joint sealants containing mercury, butyl rubber, neoprene, SBR, or nitrile not allowed.

B. Joint sealants formulated with aromatic solvents (organic solvent with benzene ring in its molecular structure), fibrous talc or asbestos, formaldehyde, halogenated solvents, mercury, lead, cadmium, hexavalent chromium, or their components not allowed.

C. Silicone—General Purpose: ASTM C920, Type S or M, Grade NS: Formulated to minimize dirt pickup.
   1. Class: 25. Joint movement range without cohesive/adhesive failure: Plus 50 percent to minus 50 percent of joint width.
   2. Uses: NT, M, G, A, O
   3. Ultra - low modulus, single or multiple component, neutral curing, non-staining, non-bleeding silicone sealant.
   4. Color: As selected by Architect from complete range available from manufacturer.
   5. Acceptable Products:
      a. 756 HP, Dow Corning.
      b. Silpruf NB – SCS9000 or Silpruf LM – SCS2700, General Electric.
      c. Spectrem 4 or Spectrem 3, Tremco.

D. Glazing Sealants: Silicone, one-part, neutral cure, ASTM C920, Type S, Grade NS, Class 25.
   1. Joint Movement: ASTM C719; plus 100, minus 50.
   2. Color: As selected by Architect from complete range available from manufacturer.
   3. Primer: When required by sealant manufacturer, type as recommended.
   4. Acceptable Products, Structural Glazing (Glass to Glass):
      a. 995 or 795 Silicone Building and Glazing Sealant, Dow Corning Corp., Midland, MI.
      b. Ultraglaze, General Electric Co., Waterford, NY.
      c. Spectrem 2, Tremco
   5. Acceptable Products, Weather Seal (Glass to Metal):
      a. 795 Silicone Structural Glazing and Weatherproofing Sealant, Dow Corning Corp., Midland, MI.
      b. Silpruf, General Electric Co., Waterford, NY.
      c. Spectrem 2, Tremco

2.3 PREFORMED JOINT SEALANTS

A. Preformed Foam Above Grade Wall Joint Primary Seal: Silicone-faced, preformed, precompressed, impregnated, open-cell foam sealant, permanently elastic, mildew resistant, nonmigratory, nonstaining, and compatible with joint substrates and other joint sealants.
   1. High-density urethane foam impregnated with nondrying, water-repellent agent.
      a. Impregnating Agent: Manufacturer's standard
      b. Density: 9 to 10 PCF.
   2. Factory-produced in pre-compressed form to fit indicated joints widths and depths.
   3. Develop watertight and airtight seal when compressed to degree required by manufacturer.
   4. Joint movement range without cohesive/adhesive failure: Plus 25 percent to minus 25 percent of joint width.
   5. Color: As selected by Architect from complete range available from manufacturer.
   6. Backing: Pressure sensitive adhesive, factory applied to one side, with protective peel-and-stick wrapping.
   7. Acceptable Product:
      a. Polytite R, Dayton Superior.
      b. Colorseal, Emseal.

B. Silicone Faced Preformed Foam Expansion Joint Seal: Refer to Section 05810.

2.4 ACCESSORIES

A. Joint Cleaner: Chemical cleaners required by sealant manufacturer for substrates encountered, compatible with sealant backing bond breaker materials.
   1. Free of Substances Capable of Staining, Corroding, or Harming:
      a. Joint substrates.
      b. Adjacent nonporous surfaces.
      c. Sealant.
      d. Sealant backing.
   2. Formulated to promote optimum adhesion of sealants to joint substrates.

B. Primer: Dyed coating material required by sealant manufacturer for enhancing sealant adhesion to joint substrates.
   1. Non-staining to joint substrate beyond substrate surface.
   2. Required for use, except as directed by manufacturer. Do not prime surfaces when directed by manufacturer or when determined by results of:
      a. "Manufacturer's Sealant-Substrate Compatibility and Adhesion Test" under Source Quality Control.
      b. "Field Hand-Pull Adhesion Test" under Field Quality Control.

C. Backer Rod: Non-staining, bond-breaking material.
   1. Backer rods manufactured with CFC blowing agents not allowed.
   2. Compatible with sealant, joint substrates, primers, and other sealant backing bond breakers.
   3. Sealant manufacturer approved.
   4. Sized and shaped to provide optimum performance and backing to sealant.
   5. Compatible and non-adhering to sealant, ASTM C1330.
      a. Type O, Open Cell Polyurethane: Not allowed unless required by sealant manufacturer.
      b. Type C, Closed Cell Polyethylene: Non-absorbent to liquid water.
         1) Use in wall, floor, and ceiling joints unless otherwise required by sealant manufacturer.
      c. Type B, Reticulated polymeric: Bicellular material, open cell core with closed cell surface skin; for use at vertical joints only.
         1) Sof®-Rod, Nomaco Inc., Zebulon, NC.
   6. Unless otherwise required by sealant manufacturer, oversize rod to be larger than joint width by following minimum amounts:
      a. Closed Cell Polyethylene: 33 percent.
      b. Reticulated Polymeric: 25 percent.

D. Sealant Backing Bond Breaker Tape: Pressure sensitive polyethylene tape or tetrafluorethylene self-adhesive tape required by sealant manufacturer to suit application.
   1. Minimum Thickness of 11 mils.

E. Sealant Tape: Precompressed, expanding foam tape, urethane impregnated, used to span irregularities and as gasket between substrates and surface mounted reglets, termination bars, cleats, and other continuously, mechanically fastened applications.
   1. Acceptable Products and Manufacturers:
      a. Polytite B, Polytite Manufacturing Corp., Cambridge, MA.

F. Tooling Liquids: Non-staining material approved by manufacturer to reduce adhesion of sealant to joint finishing tools.

2.5 MIXES

A. General: Comply with manufacturer's instructions.
   1. Mix thoroughly with mechanical mixer without mixing air into sealants.
   2. Continue mixing until sealant is uniform in color and free from streaks of unmixed materials.

2.6 SOURCE QUALITY CONTROL

A. Tests, General:
   1. Test sealants with substrates and adjacent materials.
   2. Coordinate testing of compatibility, adhesion, and staining of sealants and adjacent materials such as materials in contact with sealant and sealant backing materials.
   3. Obtain sufficient number of samples of actual proposed products in contact with sealants.
   4. Submit number and sizes of test pieces as required by testing standards for each type of material, including joint substrates, shims, sealant backing, and miscellaneous materials.
   5. Schedule sufficient time for testing and analysis of results based on specified test methods. Prevent delay in progress of Work due to testing.
   6. Investigate sealant material failing compatibility, adhesion, and staining tests and obtain manufacturer's written instructions for corrective measures, including use of specially formulated primers. Inability to correct failures results in rejection of sealant.
   7. Include in Test Report, Manufacturer's:
      a. Interpretation of test results regarding sealant performance.
      b. Primers and substrate preparation required to achieve adhesion.

B. Test Methods, Adhesion: ASTM C794 – Adhesion-in-Peel. Determine whether priming of surfaces, other specific joint preparation techniques, or other sealant types or products are required to obtain rapid, optimum adhesion of sealants to joint substrates without damaging substrates.

C. Staining and Color Change: ASTM C510.

D. Structural Glazing: ASTM C1087.

E. Staining of Porous Surfaces: ASTM C1248.

F. Durability: ASTM C1519 - Standard Practice for Evaluating Durability of Building Construction Sealants by Laboratory Accelerated Weathering Procedures

PART 3 EXECUTION

3.1 EXAMINATION

A. Ensure that concrete and masonry have cured minimum of 28 days.

B. Verify that sealant backing is compatible with sealant.

C. Verify that Substrate Surface:
   1. Is within manufacturer's moisture content range.
   2. Complies with manufacturer's cleanliness and surface preparation requirements.

D. Joint Width: Verify joints are greater than minimum widths required by manufacturer.
   1. If joints are narrower than minimum required widths, widen narrow joints to indicated width.
   2. Do not place sealant in joints narrower than manufacturer's required minimum.

3.2 PREPARATION

A. General: Prepare, clean, and prime joints in accordance with manufacturer's instructions.
   1. Remove loose materials and matter which might impair adhesion of primer and sealant to substrate.
   2. Remove form release agents, laitance, and chemical retarders, which might impair adhesion of primer and sealant to concrete and masonry surfaces.
   3. Comply with ASTM C1193.
   4. Protect elements adjoining and surrounding work of this Section from damage and disfiguration.

B. Priming:
   1. Prime Joint Substrates Unless Priming Is Not Required by:
      a. "Manufacturer's Sealant-Substrate Compatibility and Adhesion Test" under Source Quality Control.
      b. "Field Hand-Pull Adhesion Test" under Field Quality Control.
   2. Apply primer to substrate areas where joint sealant is to adhere.
   3. Comply with manufacturer's sequencing requirements for joint priming and sealant backing bond breaker rod installation to assure required primer application coverage and rate without placement of primer on backer rod surface to be in contact with sealant and avoid three-sided sealant adhesion.
   4. Do not allow spillage and migration of primer onto surfaces not to receive primer.
   5. Install sealant to primed substrates after primer has cured.

3.3 JOINT SEALANT APPLICATION

A. General:
   1. Comply with Results and Recommendations from:
      a. "Manufacturer's Compatibility and Adhesion Test" under Source Quality Control.
      b. "Field Hand-Pull Adhesion Test" under Field Quality Control article.
   2. Provide compatible sealant system between:
      a. Dissimilar assemblies;
      b. Dissimilar materials; and
      c. Adjacent types of construction.
   3. Seal locations necessary to create and secure continuous enclosure even though Drawings may not indicate all locations; do not seal weep holes.
   4. Seal to prevent migration of water, vapor, and air through joints.
   5. Comply with manufacturer's required application temperature and relative humidity ranges. Consult manufacturer when sealant cannot be applied within these ranges.

B. Sealant Backing Bond Breaker: Measure joint dimensions and size materials to achieve manufacturer-required width-to-depth ratios.
   1. Install to achieve sealant depth and sealant contact depth no greater than distance required by manufacturer for sealant material, joint width, and joint movement range.
   2. Install using blunt instrument to avoid puncturing.

3. Do Not:
   a. Twist, puncture, and tear material.
   b. Leave gaps between ends of material pieces.
   c. Stretch or compress material along its length.
   d. Stretch or compress tape material along its width.
4. Install to provide optimum joint profile and in manner to provide not less than 1/4 inch sealant depth when tooled.
5. Install tape where insufficient joint depth makes use of rod not possible. Match tape width to joint width to prevent three-side adhesion. Do not wrap tape onto sides of joint.
6. Replace backing bond breaker materials which have become wet with dry materials prior to sealant application.

C. Joint Sealant: Install sealants at same time as installation of backing bond breaker materials.
1. Do Not Exceed Manufacturer's Required:
   a. Material shelf life.
   b. Material working life.
   c. Installation time after mixing.
2. Comply with manufacturer's requirements for applying different sealant materials in direct contact with each other.
3. Use gun nozzle size to suit joint size and sealant material.
4. Install sealant with pressure-operated devices to form uniform continuous bead.
5. Use sufficient pressure to fill voids and joints full.
6. Install to adhere to both sides of joint.
7. Install to not adhere to back of joint; provide sealant backing.
8. Install sealant free of air pockets and embedded matter.
9. Recess sealant 1/8 inch from surface of pavements and horizontal surfaces.

D. Sealant Tooling: Comply with manufacturer's tooling method requirements.
1. Tool sealant within manufacturer's tooling time limits.
2. Tooling Liquids:
   a. Comply with manufacturer's requirements regarding use.
   b. Do not use when not permitted by manufacturer.
   c. Do not allow tooling liquids to come in contact with surfaces receiving sealant.
3. Produce smooth exposed surface.
4. Tool Sealant to be Free of:
   a. Air pockets and voids.
   b. Embedded impurities.
   c. Surface ridges, sags, and indentations.
5. Achieve full sealant contact and adhesion with substrate.
6. Form concave tooled joint shape indicated in Section A of Figure 5 of ASTM C1193, unless otherwise indicated.
7. Remove excess sealant from surfaces adjacent to joint.

E. Preformed Foam Sealants: Position sealant in joint.
1. Apply adhesive and top coat for pavement type sealant in accordance with manufacturer's requirements.
2. Immediately after removing wrapping to expose adhesive side, press adhesive surface onto side of joint.
3. Do not stretch or compress material.
4. At ends, turns, and intersections, comply with manufacturer's requirements to produce continuity of seal.

3.4 FIELD QUALITY CONTROL

A. Field Hand-Pull Adhesion Test:
   1. At Field Sample:
      a. Before sealant installation is commenced, test materials for indications of staining and poor adhesion to substrate.
      b. Perform after sealants have fully cured.
      c. Perform under observation of manufacturer's technical representative.
   2. Subsequent to Commencement of Sealant Installation:
      a. Perform under observation of manufacturer's technical representative.
      b. Perform minimum of four times prior to completion of sealant installation.
      c. Schedule tests at evenly-spaced intervals during sealant installation at discretion of sealant manufacturer.
   3. Procedure: Make knife cut through sealant from side to side of joint.
      a. At joint's sides, make two cuts approximately 2 inches long meeting cut made across joint width.
      b. Place mark on cut portion of sealant 1 inch from cut across joint width.
      c. Use fingers to grasp 2 inch piece of sealant firmly between mark and cut across joint width.
      d. Pull cut portion outward at angle of 90 degrees from sealant face.
      e. Use ruler to measure distance that sealant is pulled.
      f. Pull uncut sealant out of joint to distance recommended by manufacturer for testing adhesive capability, but not less than distance equal to maximum movement capability in extension.
      g. Hold extended sealant for minimum of 10 seconds.
      h. If adhesion is proper, sealant should tear cohesively in itself or be difficult to adhesively remove from joint substrate.
   4. Summarize test results in test report. Indicate:
      a. Sealants tested.
      b. Joint substrates.
      c. Cohesive failures.
      d. Adhesive failures.
      e. Pull distance used.
      f. Actions to correct failures and non-complying conditions.
   5. In absence of non-complying conditions, sealants which do not indicate adhesive failure from testing will be considered satisfactory.
   6. Replace sealant removed from test locations by applying sealant in accordance with manufacturer's requirements for applying sealant to previously sealed joints.

3.5 CLEANING AND PROTECTION

A. General: Clean excess sealants and sealant smears from adjacent surfaces as application progresses; comply with sealant manufacturer's requirements and manufacturer of surface in which joints occur.

B. Repair or replace defaced or disfigured finishes caused by work of this Section and replace where installation techniques result in unsatisfactory joining of materials and unsightly conditions.

C. Protect sealants from contamination until cured.

D. Protect sealant joints in horizontal surfaces from foot and vehicular traffic until cured.

3.6 SCHEDULE

A. Items Not to be Sealed:
   1. Joints covered by joint covers and seals specified in Section 05810.
   2. Weep holes in masonry and metal railings.

B. Joint Sealant Schedule for Exterior Locations: Provide compatible, closed cell backer rod where secondary material not designated. Unless otherwise indicated, provide joint sealant at following conditions:
   1. Wall Joints and Control Joints:
      a. Bordered both sides by porous building material (Concrete, Brick): Designation **S-GP**.
      b. Bordered both sides by non-porous building material (Coated and Uncoated Metals, Finished Aluminum, and Glass): Designation **S-GP**.
      c. Bordered on One Side by Porous Building Material (Brick, CMU, Concrete) And Other Side by Non-Porous Building Material (Coated and Uncoated Metals, Finished Aluminum, and Glass): Designation **S-GP.**
   2. Where dissimilar materials not identified above abut: Designation **S-GP**.
   3. Perimeter of Penetrations through Walls: Same as at wall joints and control joints.
   4. Expansion Joints in Ceilings, Soffits, and Overhead Surfaces: Section 05810.
   5. Control Joints and Perimeter of Penetrations in Ceilings, Soffits, and Overhead Surfaces: Designation **S-GP.**
   6. Wall and Ceiling Joints Between Frames and Adjoining Surfaces: Same as scheduled at wall joints and control joints above.
   7. Joints and Perimeter of Penetrations In Horizontal Pedestrian and Vehicle Traffic Surfaces: Designation **U-TB**.

END OF SECTION

THIS PAGE INTENTIONALLY LEFT BLANK

DIVISION 9

SECTION 09900

PAINTING

PART 1 GENERAL

1.1 RELATED DOCUMENTS

A. Drawings and general provisions of the Contract, including General Conditions, Supplementary Conditions (if included), and Division 1 Specifications Sections, apply to this Section.

1.2 SECTION INCLUDES

A. This Section includes all surface preparation, field painting and finishing of exposed interior and exterior items and surfaces on the Project.

B. Surface preparation, priming, and finish coats specified in this Section are in addition to shop priming and surface treatment specified under other Sections.

C. Paint exposed surfaces whether or not substrate is designated in schedules but would normally be painted, except where a surface or material is specifically indicated not to be painted or is to remain natural. Where an item or surface is not specifically mentioned, paint the same as similar adjacent materials or surfaces. If color or finish is not designated, OWNER will select from standard colors or finishes available.

D. Painting includes field painting exposed bare and covered pipes and ducts (including color coding), hangers, exposed steel and iron work, and primed metal surfaces of electrical equipment.

E. See Article 3.7, Paint Systems Schedule, for materials to be used.

F. See Article 3.8, Painting Schedule, for surfaces to be painted.

1.3 SAMPLES

A. Submit samples illustrating range of colors available for each surface finishing material scheduled for color selection by OWNER.

1.4 CERTIFICATES

A. Provide certification that products meet or exceed Specifications.

1.5 REGULATORY REQUIREMENTS

A. Conform to applicable code for flame and smoke rating requirements for finishes.

1.6 DELIVERY, STORAGE, AND HANDLING

A. Deliver products to Site in sealed and labeled containers; inspect to verify acceptability.

B. Container label to include manufacturer's name, type of paint, brand name, lot number, brand code, coverage, surface preparation, drying time, cleanup requirements, color designation, and instructions for mixing and reducing.

C. Store paint materials at minimum ambient temperature of 45 degrees F and a maximum of 90 degrees F in a ventilated area, and as required by manufacturer's instructions.

1.7 ENVIRONMENTAL REQUIREMENTS

A. Do not apply materials when surface and ambient temperatures are outside the temperature ranges required by the paint product manufacturer.

B. Do not apply exterior coatings during rain or snow, or when relative humidity is outside the humidity ranges required by the paint product manufacturer.

C. Minimum Application Temperatures for Latex Paints: 50 degrees F for interior or exterior, unless required otherwise by manufacturer's instructions. Surface temperature must be at least 5 degrees F greater than the dew point.

D. Minimum Application Temperature for Varnish and Similar Finishes: 50 degrees F for interior or exterior, unless required otherwise by manufacturer's instructions. Surface temperature must be at least 5 degrees F greater than the dew point.

E. Provide lighting level of 80 foot candles measured mid-height at substrate surface.

PART 2 PRODUCTS

2.1 PAINT MANUFACTURERS

A. The Sherwin-Williams Company.

B. Or as approved.

2.2 COLD GALVANIZING COMPOUND MANUFACTURERS

A. ZRC Products Company

B. Or as approved.

2.3 MATERIALS

A. Coatings: Ready-mixed, except field-catalyzed coatings. Process pigments to a soft paste consistency, capable of being readily and uniformly dispersed to a homogeneous coating; good flow and brushing properties; capable of drying or curing free of streaks or sags.

B. Galvanizing coatings: Spray or brush application, ready-mixed, except field-catalyzed coatings. Capable of being readily and uniformly dispersed to a homogeneous coating; good spray flow or brushing properties; capable of drying or curing free of streaks or sags.

C. Accessory Materials: Linseed oil, shellac, turpentine, paint thinners and other materials not specifically indicated but required to achieve the finishes specified of commercial quality. Use products compatible with painting materials and approved by paint manufacturer.

D. Paint materials and equipment shall be compatible in use.

E. Primer, Intermediate, and Finish coats shall all be from the same coatings manufacturer. Prime coats shall be compatible with and appropriate for use on surface to be coated.

2.4 COLORS

A. Colors: The first and second coats shall be white unless otherwise indicated.

PART 3 EXECUTION

3.1 EXAMINATION

A. Verify that surfaces are ready for application of materials in accordance with the product manufacturer's instructions.

B. Examine surfaces scheduled to be finished prior to commencement of Work. Report any condition that may potentially affect proper application.

C. Measure moisture content of surfaces using appropriate method as instructed by the coating manufacturer. Do not apply finishes unless moisture content of surfaces is below the coating manufacturer's acceptable maximums.

3.2 PREPARATION

A. Remove or mask electrical plates, hardware, light fixture trim, escutcheons, and fittings prior to preparing surfaces or finishing. Mask nameplates, descriptive data on pumps, motors and other equipment. Removed item shall be reinstalled by workmen skilled in the trades involved.

B. Correct defects and clean surfaces which affect Work of this Section.

C. Seal marks which may bleed through surface finishes with sealer as instructed by paint manufacturer.

D. If mildew is encountered, remove by scrubbing with solution of tri-sodium phosphate and bleach. Rinse with clean water and allow surface to dry.

E. Aluminum Surfaces Scheduled for Paint Finish: Remove surface contamination by steam or high pressure water. Remove oxidation with acid etch and solvent washing. Apply manufacturer's instructed primer immediately following cleaning.

F. Insulated Coverings: Remove dirt, grease, and oil from canvas and cotton.

G. Where surfaces are coated with bituminous coating that is not compatible with paint material, remove bituminous coating with abrasive blasting.

H. Gypsum Board Surfaces: Fill minor defects with filler compound. Spot-prime defects after repair.

I. Galvanized Surfaces: Remove surface contamination and oils and wash with solvent. Apply manufacturer's instructed primer.

J. Uncoated Steel and Iron Surfaces:
   1. Welded areas shall be ground smooth per NACE Standard RP 0178.
   2. Use abrasives for blast cleaning that are clean, uniformly graded, and free of oil, soluble salts, chlorides, or foreign matter which could contaminate the blasted surface. Size the abrasive to produce an anchor pattern profile height as required by the coating manufacturer.
   3. Metal surfaces to be painted and not factory-primed, shall be field abrasive-blasted in accordance with NACE-3 (SSPC-SP6), commercial blast for non-immersion service; and in accordance with NACE-2 (SSPC-SP10), near-white blast for immersion service, unless a higher degree of surface preparation is required by the manufacturer.

K. Shop-Primed Steel Surfaces:
   1. For non-submerged metal surfaces, remove loose primer and rust in accordance with SSPC-SP2 Hand Tool Cleaning or SSPC-SP3 Power Tool Cleaning. Feather edges to make touch-up patches inconspicuous. Clean surfaces in accordance with SSPC-SP1 Solvent Cleaning. Prime bare steel surfaces.
   2. Retouch damaged areas of shop-primed items with compatible primer.
   3. CONTRACTOR shall be responsible for compatibility of shop primer with field-finish coats.
   4. For metal surfaces in a submerged, vapor, or splash zone, remove shop primer and blast clean to SSPC-SP10 Near-White Blast Clean. Apply primer as specified.

3.3 APPLICATION

A. Do not apply materials until representative samples of surface preparation are approved by ENGINEER and an authorized representative of the manufacturer.

B. Comply with manufacturer's instructions.

C. Do not thin materials, except to comply with manufacturer's instructions.

D. Apply coatings to all surfaces with special attention to hard-to-reach areas such as between the legs of back-to-back angles. Apply each coat to achieve the specified dry film thickness.

E. Do not apply finishes to surfaces that are not dry.

F. Deficiencies in film or coating thickness shall be corrected by the application of additional coat(s) of material at the expense of CONTRACTOR.

G. Apply each coat to a uniform smooth finish.

H. Special attention shall be given to ensure that edges, corners, crevices and welds, receive a film or coating thickness equivalent to that of adjacent surfaces. At no time will wet-on-wet applications be permitted. The finished surfaces shall be free from runs, drips, ridges, waves, laps, brush marks and variations in color, texture and finish.

I. Apply each coat of paint slightly darker than the preceding coat unless otherwise approved.

J. Sand surfaces lightly between coats as required to achieve required finish.

K. Vacuum clean surfaces free of loose particles. Use tack cloth just prior to applying next coat.

L. Prime concealed surfaces of wood to be scheduled for paint finish with primer paint.

3.4 FIELD QUALITY CONTROL

A. Wet Film Thickness: Monitor during application of each successive coat.

B. Dry Film Thickness: Measure the thickness of each coat applied using non-destructive dry film thickness gages. Calibrate gages and perform thickness measurements in accordance with SSPC-PA2. Disputes regarding coating thickness applied shall be resolved by use of a Tooke Gage (destructive scratch gage) to the extent required. Repair damage created by destructive testing using the complete coating system specified.

C. Inspection Devices: CONTRACTOR shall possess, use, and make available for use by OWNER, inspection devices in good working order for dry film thickness measurement. Furnish with the inspection device, U.S. Department of Commerce, National Bureau of Standards certified thickness calibration plates to verify accuracy of the dry film thickness gages.

3.5 CLEANING

A. Collect waste material which may constitute a fire hazard; place in closed metal containers and remove daily from Site.

B. Remove masking, over-spray, or drips on adjacent surfaces.

3.6 PAINT SYSTEM SCHEDULE

A. Unless otherwise specified, paint systems of The Sherwin-Williams Company are listed. Equivalent systems of other manufacturers specified in Article 2.1 are acceptable.

SUBSTRATE		**DESCRIPTION**	**DRY MILS**
A. METAL – EXTERIOR	Prime Coat	Recoatable Epoxy Primer, B67 Series, B67V5 Hardener	3 – 6
	First Coat	Hi-Solids Polyurethane, B65-300 Series Color, B60V30 Hardener	3 – 4
	Second Coat	Hi-Solids Polyurethane B65-300 Series Color, B60V30 Hardener	3 – 4
	Final DFT		9 – 14
	NOTE: PRIMER AVAILABLE IN FOLLOWING COLORS: GRAY, TAN, RED OXIDE		
B. METAL – INTERIOR	Prime Coat	Recoatable Epoxy Primer, B67Series, B67V5 Hardener	3 – 6
	First Coat	Tile-Clad HS, B62Z Series, B70VZ70/75	2.5 – 4
	Second Coat	Tile-Clad HS, B62Z Series, B70VZ70/75	2.5 – 4
	Final DFT		8 – 14
	Galvanized Repair	ZRC® Cold Galvanizing Compound or Engineer approved equal.	1.5

SUBSTRATE		DESCRIPTION	DRY MILS
C. DRYWALL	Prime Coat	PrepRite 200 Latex Wall Primer, B28W200	1 – 2
	First Coat	Epo-Plex Multi-Mil Water Based Epoxy B71-100 Series Color, B71V100 Gloss	3 – 6
	Second Coat	Epo-Plex Multi-Mil Water Based Epoxy B71-100 Series Color, B71V100 Gloss	3 – 6
	Final DFT		7 – 14
D. INSULATED PIPING	Prime Coat	PrepRite 200 Latex Wall Primer, B28W200	1 – 2
	First Coat	Metalatex Semi-Gloss Coating, B42 Series Color	1.5 – 4
	Second Coat	N/A	
	Final DFT		2.5 – 6

3.7 PAINTING SCHEDULE

A. The following indicates the surfaces to be painted using the materials previously specified in Article 3.7 for the type of surface and conditions of service. The painting of piping includes the painting of insulated piping, the painting of all appurtenances in the respective piping lines (valves, operators, metal supports, etc.) and other items not installed directly in a pipe line. Prime and paint insulated and exposed pipes, conduit, boxes, hangers, brackets, collars and supports, (visible and concealed/hidden supports), except where items are prefinished.

B. The painting of electrical conduits includes the painting of all appurtenances in the respective conduit runs (boxes, etc.).
   1. Drywall Riser Piping Enclosures
   2. Piping
   3. Electrical Conduit

C. The following indicates the colors to be used for the painting of piping and electrical conduits:
   1. Drywall Riser Piping Enclosures: As determined by OWNER.
   2. Piping Color Code: As determined by OWNER.
   3. Electrical Conduit Color Code: As determined by OWNER.

END OF SECTION

DIVISION 10

DIVISION 10 – SPECIALTIES

SECTION 10210

LOUVERS

PART 1 GENERAL

1.1 SUMMARY

A. Related Requirements: Comply with following:
   1. Metal Finishes: Section 05075.
   2. Division 15 - Ductwork attachment to louvers.

1.2 DEFINITIONS

A. Closed Room Design: Louvers located in rooms affected by pressurization caused by wind gusts. Test louvers for cyclic wind pressure resistance.

B. Drainable Blade Louver: Louver assembly designed to collect and drain water to exterior at sill by means of gutters located in blades and channels in jambs and mullions; not capable of withstanding penetration by wind driven rain.

C. Dry Room Design: Rooms not designed to accommodate water infiltration or rooms containing equipment, components, or supplies subject to damage due to water infiltration. Test louvers for compliance with wind driven rain penetration tests. Dry room requirements may apply to open room or closed room designs.

D. Maximum Standard Airflow: Airflow at point of beginning water penetration through a test louver, 48 by 48 inches, identical to units provided.

E. Minimum Weather Louver Effectiveness: Louver rating based on tests conducted in accordance with:
   1. AMCA Standard 500-L.

F. Open Room Design: Louvers located in rooms not affected by pressurization caused by wind gusts. Test louvers for compliance with Uniform Static Air Pressure Test.

G. Storm – Control Louver: Louver assembly tested to withstand water penetration due to wind driven rain.

H. Wet Room Design: Rooms designed to accommodate water infiltration. Room design includes area drains and waterproof floor coatings; contains water-resistant or waterproof equipment, components, or supplies. Wet room requirements may apply to open room or closed room designs.

1.3 SYSTEM DESCRIPTION

A. Design Requirements: Manufacturer is responsible for designing units, including anchorage to structural system and necessary modifications to meet specified requirements and maintain visual design concepts.
   1. Employ registered professional engineer, to engineer each component of metal wall louver system for louvers larger than 10 square feet of area.

2. Drawings: Diagrammatic and intended to establish basic dimension of units, sight lines, and profiles of units.
3. Make modifications only to meet field conditions and to ensure proper fitting of Work.
4. Obtain Architect's approval of modifications.
5. Provide concealed fastening wherever possible.
6. Attachment Considerations: Account for site peculiarities and expansion and contraction movements so there is no possibility of loosening, weakening and fracturing connection between units and building structure or between components themselves.
7. Wind Loading, Typical: Design, engineer and install to withstand minimum positive and negative wind pressures specified.
8. Free Area: Not less than 50 percent.

B. Performance Requirements:
1. Water Penetration: Not more than 0.01 ounce of water per square foot of free area at 770 FPM free air velocity when tested in accordance with AMCA 500.
2. Static Pressure Loss: Not more than 0.10 inch of water gage at 770 FPM free air velocity when tested in accordance with AMCA 500.

C. Interface With Adjacent Systems:
1. Integrate design and connections with adjacent construction.

1.4 SUBMITTALS

A. General: Submit in accordance with Section 01300.

B. Product Data: Submit descriptive data for performance criteria, free area, and finishes.
1. Submit copy of test data and AMCA certification for each model of louver.

C. Shop Drawings: Stamp with seal and signature of professional engineer responsible for design of louvers larger than 10 square feet of area.
1. Include details of fabrication and erection, anchorage, and accessories.
2. Indicate material thickness.
3. Indicate elevations, dimensions and tolerances, blade configuration and screening.

D. Informational Submittals: Submit following packaged separately from other submittals:
1. Support reactions design data.
2. Certifications specified in Quality Assurance article.
3. Qualification Data: Engineer's qualification data.
4. Manufacturer's instructions.

1.5 QUALITY ASSURANCE

A. Engineer Qualifications: Registered professional engineer licensed to practice structural engineering in jurisdiction where Project is located, with minimum of 5 years experience in design of metal wall louvers.

B. Certifications: Submit following:
1. Submit manufacturer's certification that products furnished for Project meet or exceed specified requirements.
2. Engineering certifications.

1.6 PROJECT CONDITIONS

A. Coordinate Work with mechanical ductwork.

1.7 WARRANTY

A. Special Warranty: Prepare and submit in accordance with Section 01700.
   1. Warrant installed units to be free from defects in material and workmanship for period of five years
   2. Warranty stating organic coating finish will be free from fading more than 10 percent, chalking, yellowing, peeling, cracking, pitting, corroding or non-uniformity of color, or gloss deterioration beyond manufacturer's descriptive standards for 20 years.

PART 2 PRODUCTS

2.1 MANUFACTURERS:

A. Acceptable Manufacturers:
   1. The Airolite Company, Marietta, OH 45750.
   2. Construction Specialties, Inc., Cranford, NJ 07016.
   3. Ruskin Company, Grandview, MO 64030.

2.2 MATERIALS

A. Aluminum Sheet: ASTM B209, alloy and temper as recommended by manufacturer.

B. Aluminum Extrusions: ASTM B221, alloy and temper as recommended by manufacturer.

C. Bird Screen: 1/2 inch square mesh, 0.063 inch aluminum wire, 80 percent free area.

D. Anchors and Fasteners: Hot-dip galvanized, stainless steel, aluminum or other non-ferrous metal, compatible with materials to be fastened.
   1. Types, gages, and lengths to suit installation conditions.

E. Bituminous Paint: Manufacturer's standard cold applied asphalt mastic.

F. Blade Braces and Supports: Manufacturer's standard components for louvers of continuous blade design.

2.3 METAL WALL LOUVER FABRICATION

A. Fabricate assemblies of extruded aluminum or sheet aluminum, except where specifically noted otherwise.
   1. Join frame members to one another and to stationary louver blades by welding, except where field bolted connections between frame members are made necessary by louver size. Dress exposed welds smooth and flush with adjacent surfaces.
   2. Maintain equal blade spacing, including blade separation from frame at head and sill to produce uniform appearance.
   3. Fabricate frames to suit adjacent construction with tolerances allowing for application of sealants in joints between louvers and adjoining work.
   4. Include supports, anchorages, and accessories required for complete assembly.
   5. Provide blade braces and supports for continuous blade louvers, at spacings indicated but not further apart than recommended by manufacturer or 6 foot centers, whichever is less.

6. Provide separate sill extension pieces, full width of louver assembly to prevent water penetrating to interior. Provide drip flashing at head section where louvers are flush with face of wall. Fabricate of same metal as louvers, except aluminum sheet metal is acceptable at extruded louvers.
7. Provide bird screens for each louver. Fabricate frame of screen in manufacturer's standard extruded or folded design of same metal as louver.

2.4 STATIONARY METAL WALL LOUVERS

A. Drainable Continuous Blade Assemblies: Extruded aluminum.
   1. Thickness: Not less than 0.081 inches for extruded aluminum, 14 gage for aluminum sheet.
   2. Frame Depth: 6 inches.
   3. Blades: 35 degrees, single drainable type spaced at 3-1/2 inch centers.
   4. Provide structural supports, invisible vertical intermediate mullions, and blade braces designed and spaced to withstand wind loading.
   5. Acceptable Product: K6776 The Airolite Company.

B. Storm Control Horizontal, Sight-proof, Drainable-Blade Louver Assemblies: Extruded Aluminum.
   1. Frame Thickness: Not less than 0.081 inch.
   2. Blade Thickness: Not less than 0.081 inch.
   3. Depth: Not less than 5 inches.
   4. Weather Louver Effectiveness Rating:
      a. Free Area Velocity at beginning point of water penetration at rate of 0.01 oz/sq. ft of free area: 1250 FPM.
      b. Air Volume Delivered at 31250 FPM: 9337 CFM.
      c. Static Pressure Drop at 1250 FPM: 0.18 inches WG.
   5. Acceptable Product: SCH501 The Airolite Company.

2.5 FINISH

A. Fluoropolymer (PVDF) Coating: In accordance with Section 05075.

PART 3 EXECUTION

3.1 EXAMINATION

A. Examine conditions and proceed with Work in accordance with Section 01735.
   1. Verify that prepared openings are ready to receive assemblies and openings are of required dimensions.

3.2 INSTALLATION

A. Metal Wall Louvers: Install in accordance with Section 01735 and approved shop drawings.
   1. Install level, plumb, square and in proper alignment with adjacent surfaces.
   2. Align louver assembly to ensure moisture drains from flashings and blades to exterior.
   3. Form tight joints with exposed connections accurately fitted together.
   4. Secure with concealed fasteners wherever possible.
   5. Apply coat of bituminous paint or zinc chromate primer on concealed aluminum surfaces in contact with cementitious or dissimilar materials.
   6. Mount screens on inside face of louvers.

3.3 CLEANING

A. Repair exposed to view surfaces which have been damaged to match original condition.
   1. Clean surfaces and components to remove foreign substances.

END OF SECTION

THIS PAGE INTENTIONALLY LEFT BLANK

SECTION 10522

FIRE EXTINGUISHERS

PART 1 GENERAL

1.1 DEFINITIONS

A. Where indicated on Drawings, abbreviation FE is for fire extinguisher without cabinet.

1.2 SUBMITTALS

A. General: Submit in accordance with Section 01300.

B. Product Data: Furnish manufacturer's descriptive literature.
   1. Include physical dimensions, operational features, color and finish, anchorage details, material descriptions, and type of hardware.

C. Informational Submittals: Submit following packaged separately from other submittals:
   1. Manufacturer's Instructions: Installation instructions for fire extinguisher cabinets.

1.3 QUALITY ASSURANCE

A. Single Source Responsibility: Obtain products in this Section from one manufacturer.

B. Certifications: Submit certification of following:
   1. Extinguishers: UL listed and bear UL rating for type and classification or conform to NFPA-10 requirements for extinguishers.

1.4 PROJECT CONDITIONS

A. Environmental Requirements: Do not store products subject to freeze damage in environments where damage could occur.

PART 2 PRODUCTS

2.1 MANUFACTURERS

A. Acceptable Manufacturers, Fire Extinguisher Cabinets:
   1. JL Industries, Bloomington, MN 55435.
   2. Larsen's Manufacturing Co., Fridley, MN 55432.
   3. Potter Roemer, Santa Ana, CA 92704.

2.2 FIRE EXTINGUISHERS

A. Fire Extinguisher Type 4A:60B:C: Multi-purpose Dry Chemical Type (Siliconized Mono Ammonium Phosphate) with Pressure Gage.
   1. Capacity: 10.0 pounds.
   2. UL Rating: 4A-60B:C.
   3. Acceptable Product: MP10, Larsen's.

2.3 ACCESSORIES

A. Fire Extinguisher Brackets: Similar to Larsen's B series or Potter-Roemer 3900 full length wall brackets, size as required for cylinder used.

2.4 FINISHES

A. Extinguisher: Red enamel.

PART 3 EXECUTION

3.1 EXAMINATION

A. Examine conditions and proceed with Work in accordance with Section 01735.
   1. Verify rough openings for cabinets are correctly sized and located.

3.2 INSTALLATION

A. Fire Extinguishers: Install in accordance with Section 01735 and manufacturer's printed instructions.

B. Identification: Identify Fire Extinguisher Locations with Following Methods:
   1. Fire Extinguisher Locations Without Cabinets: Use vertical decal spelling FIRE EXTINGUISHER applied to adjacent wall surface.

3.3 SCHEDULE

A. Provide 5 fire extinguishers to be located at each existing exit of the Garage and at 48" above finished floor. Exact locations to be determined by authorities having jurisdiction.

END OF SECTION

DIVISION 13

SECTION 13122

PRE-ENGINEERED BUILDING STRUCTURE

PART 1 GENERAL

1.1 SECTION INCLUDES

A. Pre-Engineered Metal Building
   1. Structural steel frame.
   2. Complete wall and roof covering systems consisting of the exterior panels, panel attachments, insulation, sealants, mastics, trim, and flashings as required for a weather-tight assembly.
   3. Roof Accessories, including gutters and downspouts.

1.2 DESIGN REQUIREMENTS

A. Applicable Building Code: 2015 International Building Code as adopted by New York State. See Drawings for loading information.

B. Dead loads: Include the weight of all indicated permanent construction and a collateral roof dead load as follows:
   1. Building: 5 pounds per square foot (psf)

C. Design wall and roof panel system to withstand specified loads with deflection of 1/240th of span, maximum.

D. Anchor Bolts: Furnish design criteria for anchor bolts to resist the loads induced by the design loads on the structure.

1.3 SUBMITTALS

A. Design Data: Provide detailed design criteria and calculations, including loads to foundation.

B. Certification: Manufacturer certification that the building conforms to the Contract Documents and manufacturer's standard design procedures.

C. Shop Drawings: Show building layout, primary and secondary framing member sizes and locations, cross-sections, and product and connection details.

D. Product Data: Information on manufactured products to be incorporated into the Project.

E. Color Samples: For selection of colors.

F. Anchor Bolt Installation Drawings: Layouts with bolt diameters.

G. Specimen Warranty.

1.4 QUALITY ASSURANCE

A. Design structural components, develop Shop Drawings, and perform shop and Site Work under direct supervision of a Professional ENGINEER experienced in design of this Work and licensed in the State of New York.

B. Design data and four sets of shop drawings submitted for review shall bear the seal of a professional engineer licensed in the State of New York.
   1. Shop Drawings shall include dimensions and details showing the location and orientation of every shipping piece, column center lines, reference lines, anchor bolt locations, and base plate sizes.
   2. Drawings shall incorporate all materials and items required in the Scope of Supply as well as complete instructions for all Work, including Work normally performed by the CONTRACTOR without benefit of Drawings.

C. Qualifications:
   1. Manufacturer: Company specializing in manufacturing products specified in this Section with minimum five (5) years documented experience.
   2. Erector: Company specializing in performing Work of this Section with minimum five (5) years documented experience and approved by manufacturer.

1.5 WARRANTY

A. Provide manufacturer's standard warranty for:
   1. Panel Finish: 20 years.
   2. Weather-tightness: 10 years.
   3. Materials and Workmanship: 3 years.

PART 2 PRODUCTS

2.1 METAL MATERIALS

A. Structural Steel Plate, Bar, Sheet, and Strip for Use in Bolted and Welded Constructions: ASTM A572, A1011, A529, or A36, as applicable.

B. Structural Steel Material for Secondary Structural Members: ASTM A1011, with minimum yield strength of 57,000 psi.

C. Galvanized Steel Sheet for Roof and Wall Coverings, Trim, and Flashing: ASTM A653, with minimum yield strength of 50,000 psi. Coating designation G-90.

D. Hot Rolled Steel Shapes: ASTM A36 OR A992 as applicable; with minimum yield strengths of 36 or 50 kips per square inch (ksi).

E. Structural Bolts and Nuts Used with Primary Framing: High strength, ASTM A325.

F. Bolts and Nuts Used with Secondary Framing Members: ASTM A325.

2.2 FRAME COMPONENTS

A. Primary Framing: Rigid Frame solid web framing consisting of tapered or uniform depth rafters rigidly connected to tapered or uniform depth columns. Provide a clear span that supports the loads at bay spacings indicated.

B. Secondary Framing: Provide girts, furring channels, angles, plates, bracing, and other secondary framing members for panel supports and anchorage.

C. Endwall Framing: Corner posts, endposts, and rake beams.

D. Purlins: Zee-shaped; depth as required; simple span or continuous span as required for design.

E. Girts: Zee- or Cee-shaped; depth as required; simple span or continuous span as required for design.

F. Wind Bracing: Portal, torsional, diagonal bracing, or diaphragm in accordance with manufacturer's standard design practices; utilizing rods, angles, and other members, with minimum yield strengths as required for design.

G. Primary Frame Flange Bracing: Attached from purlins or girts to the primary framing, minimum yield strength as required for design.

H. Wall Panel Penetration Framing: Zee- or Cee-shaped; depth as required.

I. Sag Angles and Bridging: Steel angles, with minimum yield strength of 36,000 psi.

J. Fabrication: Fabricate according to manufacturer's standard practice.
   1. Fabricate structural members made of welded plate sections by jointing the flanges and webs by continuous automatic submerged arc welding process.
   2. All welding operators and processes shall be qualified in accordance with the American Welding Society "Structural Welding Code," AWS D1.1.
   3. Field connections. Prepare members for bolted field connections by making punched, drilled, or reamed holes in the shop.

K. Shop Coating: Finish all structural steel members using one coat of manufacturer's standard shop coat, after cleaning of oil, dirt, loose scale, and foreign matter.

L. Component Identification: Mark all fabricated parts, either individually or by lot or group, using an identification marking corresponding to the marking shown on the Shop Drawings, using a method that remains visible after shop coating.

2.3 ROOF PANEL COMPONENTS

A. 36 inches wide net coverage, with 1-3/16 inches high major ribs at 12 inches on center with minor ribs spaced between the major ribs.

1. Material: Galvanized steel, ASTM A446, Grade D (50,000 psi yield) with G90/Z275 coating.
2. Thickness: 24 gauge minimum.
3. Side Laps: At least one full major rib, with a supporting member bearing edge on the lower panel and an anti-capillary groove on the upper panel.
4. Length: Continuous from eave to ridge.
5. The roof shall be tested and certified to meet Underwriters Laboratory Incorporated (UL) uplift rating; UL90.
6. Finish: Kynar 500 or Hylar 5000 pre-painted finish on exterior surface, wash coat on interior surface. Color selected by OWNER from manufacturer's full line.

2.4 WALL PANEL COMPONENTS

A. 36 inches wide net coverage, with 1-3/16 inches high major ribs at 12 inches on center with minor ribs spaced between the major ribs.
   1. Material:
      a. Galvanized steel, ASTM A446
      b. The panels shall be the manufacturer's standard ribbed or corrugated configuration, which requires use of only ordinary tools of the trade for installation – no crimping or seaming machines are to be used.
   2. Thickness: 24 gauge minimum.
   3. Side Laps: At least one full major rib, with a supporting member bearing edge on the lower panel and an anti-capillary groove on the upper panel.
   4. Length: Continuous from sill to eave where possible.
   5. Endlaps, where required: 4 inches wide, located at a support member.
   6. Cut panels square at each end; provide base trim at sill.
   7. Finish: Kynar 500 or Hylar 5000 pre-painted finish on exterior surface, wash coat on interior surface. Color selected by OWNER from manufacturer's full line.

2.5 MISCELLANEOUS MATERIALS

A. Panel Fasteners.
   1. For Roof Panels: Stainless steel-capped carbon steel fasteners with integral sealing washer.
   2. For Wall Panels: Coated carbon steel fasteners with integral sealing washer.
   3. Color of exposed fastener heads to match the wall panel finish.
   4. Concealed Fasteners: Self-drilling type, of size as required.
   5. Grommetted bolts shall have independent-type washer bonded to neoprene – bolt to be provided with painted head to match the panels.
   6. Provide fasteners in quantities and location as required by the manufacturer.

B. Flashing and Trim: Match material and color of adjacent components (ASTM A446, 1.25 ounce coating). Provide trim at rakes, including peak and corner assemblies, high and low eaves, corners, bases, framed openings, and as required or specified to provide weather-tightness and a finished appearance.

C. Plastic Parts: Glass fiber reinforced resin or thermoformed ABS.
   1. ABS: Minimum 1/8 inch thick.
   2. Color: Manufacturer's standard color.

D. Sealants, Mastics, and Closures: Manufacturer's standard type.
   1. Provide at roof panel endlaps, sidelaps, rake, eave, transitions, and accessories as required to provide a weather-resistant roof system; use tape mastic or gunnable sealant at sidelaps and endlaps.
   2. Provide at wall panel rakes, eaves, transitions, and accessories.
   3. Provide at door and louver frames, and other penetrations.
   4. Closures: Formed to match panel profiles; closed cell elastic material, manufacturer's standard color.
   5. Tape Mastic: Pre-formed butyl rubber-based, non-hardening, non-corrosive to metal; white or light gray.
   6. Gunnable Sealant: Non-skinning synthetic elastomer,based material; gray or bronze.

E. Blanket Insulation: Glass fiber, with fully encapsulated in plastic facing:
   1. Glass fiber: Odorless, neutral-colored, long filament, flexible, resilient, produced in compliance with the NAIMA 202 specifications.
   2. Thermal Resistance: Well insulation: meet R=19 @ 75 degrees Fahrenheit (F) mean temperature. Ceiling insulation: meet R=30 @ 75 degrees Fahrenheit (F) mean temperature.
   3. Flame spread Index: 25 or less, when tested in accordance with UL 723.
   4. Smoke Developed Index: 50 or less, when tested in accordance with UL 723.
   5. UL Classified.
   6. Facing: White vinyl scrim polyester; 0.0025-inch-thick PVC film, glass fiber scrim reinforcing, 0.0005-inch-thick polyester film; permeance 0.02 perms. Composite fiberglass and facing to meet Flame Spread of 25 or less, Smoke Developed of 50 or less, when tested in accordance with UL 723.
   7. Width: As required for installation.
   8. Use blanket insulation at roof and walls.

2.6 WALL ACCESSORIES

A. Louvers shall be manually adjustable type, prefinished, formed galvanized steel. Exterior finish shall be factory-applied baked enamel, color to match wall panels. Interior finish shall be manufacturer's standard. Woven wire bird screening, not less than 3 by 3 mesh per square inch in rewireable frames shall be provided on the exterior of louvers; screen frames shall be installed by means of clips in such a manner that they can be removed readily for cleaning and rewiring. The screens and frames shall be of the same type metal as the louvers; screen wire shall not be less than 0.0475-inch diameter.

B. Provide framed openings as required for doors, piping, and ductwork.

2.7 ROOF ACCESSORIES

A. Eave Gutters: Roll-formed 24 gauge steel (ASTM A446, 1.25 ounce coating) sheet, with gutter straps, fasteners, and joint sealant; same color as wall panels.
   1. Downspouts: 4 x 5 inches in 10-foot lengths, with downspout elbows and downspout straps; same color as wall panels.

2. Splash Pads: Precast concrete type at all downspouts, sloped to drain away from structure; minimum 3,000 psi at 28 days.

2.8 SERVICE DOORS

A. Description: Exterior, thermally insulated, hollow metal door and frame, SDI-100 Grade III Model 2.

B. Design: Maximum insulation U-value of 0.19 Btuh/square feet/degree F; maximum air infiltration for installed assembly of 0.40 cfm/square foot.

C. Finish: Galvanize to ASTM A653, G60; clean, phosphatize, and finish with one coat of epoxy-compatible primer; coat inside of frame profile with bituminous coating to a minimum thickness of 1/16 inch; field finish exposed surfaces with two coats of industrial grade epoxy.

D. Hardware: Meet requirements of 28 CFR Part 36.
   1. ANSI A156.1 full mortise type, heavy duty, ball bearing hinges, 4-1/2 inch, non-removable pins; single door – 1-1/2 pair.
   2. Mortise lockset, ANSI A156.13, Series 1000, Grade 1, ANSI F20 entrance function, lever handle.
   3. Aluminum threshold.
   4. BHMA 630, satin finished stainless steel except threshold.
   5. Vinyl bulb-type weather stripping.

E. Glazing:
   1. Designed to accommodate 1/2-inch glass for exterior doors and 1/4-inch glass for interior doors.
   2. Glazing Stops: 18 gauge steel; welded corners; exterior non-removable, interior screw attached.
   3. Glass: ASTM C1036, Type 1 transparent flat, Class 1 clear, Quality q3 glazing select.

2.9 OVERHEAD DOOR

A. Description: Spring counterbalanced, insulated overhead coiling door curtain of interlocking slats designed to withstand a wind load of 20 psf of continuous length for width of door without splices. Maximum insulation U-value of 0.14 Btuh/square feet/degree F; maximum air infiltration for installed assembly of 0.40 cfm/square foot.

B. Door Curtain:
   1. Slats of structural quality cold-rolled, sheets complying with ASTM A446, Grade A, with G90 zinc coating, phosphate-treated before fabrication. Provide flat profile, with minimum 20 gauge exterior and 24 gauge back covers.
   2. Malleable iron endlocks, and windlocks (if required for width of door), galvanized after fabrication, secured to curtain slats with galvanized rivets.
   3. Bottom bar consisting of two galvanized angle extrusions, each not less than 1 inch by 1 inch by 1/8 inch thick.

4. Helical torsion spring counterbalance mechanism, housed in a steel tube or pipe barrel, designed for standard 20,000 cycles, and adjustable by means of tension wheel.

C. Track:
1. Curtain jamb guides fabricated of steel angles, or channels and angles with sufficient depth and strength to retain curtain loading. Build up units with minimum 3/16-inch-thick steel sections, galvanized after fabrication. Slot bolt holes for track adjustment. Secure continuous wall angle to wall framing as instructed by door manufacturer. Extend wall angles above door opening head to support coil brackets unless otherwise indicated. Provide removable stops on guides to prevent overtravel of curtain, and continuous bar for holding windlocks (if included).
2. Cast in or cold-rolled minimum 3/16-inch stainless steel plate mounting brackets, with bell mouth guide groove for curtain.

D. Finishes: Shop-clean and prime ferrous metal and galvanized surfaces, exposed and unexposed, except faying and lubricated surfaces, with door manufacturer's standard rust-inhibitive primer.

E. Hardware:
1. Inside center-mounted, adjustable keeper, spring-activated latch bar with feature to keep in locked or retracted position; interior handle only.
2. 1/8-inch-thick vinyl or neoprene weather-stripping; continuous sheet secured to inside of curtain coil hood; continuous strip secured to exterior side of jamb guide.

2.10 WINDOWS

A. Glass lights in swing doors and office windows shall be 1/4-inch-thick polished wire glass, putty bedded and secured with metal stops.

B. Glass lights in exterior doors shall be 1/2-inch-thick polished wire glass, putty bedded and secured with metal stops.

END OF SECTION

DIVISION 15

DIVISION 15 - MECHANICAL

SECTION 15050

BASIC MATERIAL AND METHODS

PART 1 GENERAL

1.1 SECTION INCLUDES

A. Products.

B. Transportation and handling.

C. Storage and protection.

D. Operation and maintenance data.

E. Warranties.

1.2 PRODUCTS

A. Products: Means new material, machinery, components, equipment, fixtures, and systems forming the Work. Does not include machinery and equipment used for preparation, fabrication, conveying and erection of the Work. Products may also include existing materials or components required for reuse.

B. Provide interchangeable components of the same manufacturer, for similar components.

1.3 TRANSPORTATION AND HANDLING

A. Coordinate logistics for the delivery, scheduling, and receipt of materials and equipment to the Site. Notify ENGINEER of major deliveries or other movements that might cause traffic or unloading blockages that could affect other elements of the Work.

B. Maintain inventory control of material and equipment received at the Site. All material and equipment shall be stored in an orderly and organized manner in the designated areas.

C. Transport and handle products in accordance with manufacturers' instructions.

D. Promptly inspect shipments to assure that products comply with requirements, quantities are correct, and products are undamaged.

E. Provide equipment and personnel to handle products by methods to prevent soiling, disfigurement, or damage.

1.4 STORAGE AND PROTECTION

A. CONTRACTOR shall be responsible for proper unloading, inspection, and storage of all equipment and material items delivered to the job site for its work.

B. Store equipment and piping in the designated clean equipment storage area.

C. Backfill material shall be stored in designated temporary storage areas.

D. Store and protect products in accordance with manufacturers' instructions, with seals and labels intact and legible. Store sensitive products in weather-tight, climate controlled enclosures.

E. For exterior storage of fabricated products, place on sloped supports, above ground.

F. Cover products subject to deterioration with impervious sheet covering. Provide ventilation to avoid condensation.

G. Store loose granular materials on solid flat surfaces in a well-drained area. Avoid mixing with foreign matter.

H. Provide equipment and personnel to store products by methods to prevent soiling, disfigurement, or damage.

I. Arrange storage of products to permit access for inspection. Periodically inspect to assure products are undamaged and are maintained under specified conditions.

J. CONTRACTOR will replace at its sole expense all CONTRACTOR-furnished and CONTRACTOR-accepted materials damaged during unloading and storage damaged by weather, damaged by vandalism or other related causes.

1.5 OPERATION AND MAINTENANCE DATA

A. Provide operating and instruction manuals and warranty and service information from equipment manufacturers to the ENGINEER upon completion of the Work.

B. Operating Procedures: Include start-up, break-in, and routine normal operating instructions and sequences. Include regulation, control, stopping, shut-down, and emergency instruction. Include summer, winter, and any special operating instruction.

C. Maintenance Requirements: Include routine procedures and guide for troubleshooting; disassembly, repair, and reassembly instructions; alignment, adjusting, balancing, and checking instructions.

D. Include manufacturers' printed operation and maintenance instructions.

E. Provide original manufacturers' parts list, illustrations, assembly drawings, and diagrams required for maintenance.

F. Identify local supplier for spare parts and/or field service.

1.6 WARRANTIES

A. Obtain warranties executed in duplicate by responsible subcontractors, suppliers, and manufacturers, within 10 days after completion of the applicable item or Work. Unless specified otherwise all products and materials shall be warranted for 12 months after installation and start-up or 18 months after delivery, whichever comes first. CONTRACTOR is responsible for coordinating equipment procurement to insure all equipment warranties will be in effect 12 months after system start-up.

PART 2 PRODUCTS – (NOT USED)

PART 3 EXECUTION – (NOT USED)

END OF SECTION

THIS PAGE INTENTIONALLY LEFT BLANK

SECTION 15052

BASIC HVAC MATERIALS AND METHODS

PART 1 GENERAL

1.1 SUMMARY

A. Section Includes: Following basic mechanical materials and methods to complement other Division 15 Sections.
   1. Piping materials and installation instructions common to most piping systems.
   2. Concrete base construction requirements.
   3. Escutcheons.
   4. Dielectric fittings.
   5. Flexible connectors.
   6. Mechanical sleeve seals.
   7. Equipment nameplate data requirements.
   8. Labeling and identifying mechanical systems and equipment is specified in Section 15075 - Mechanical Identification.
   9. Nonshrink grout for equipment installations.
   10. Field-fabricated metal and wood equipment supports.
   11. Installation requirements common to equipment specification sections.
   12. Cutting and patching.
   13. Touchup painting and finishing.

B. Pipe and pipe fitting materials are specified in Division 15 piping system Sections.

1.2 RELATED WORK

A. Section 01300 - Submittals.

B. Section 01600 - Product Requirements.

C. Section 01732 - Cutting and Patching.

D. Section 01740 - Cleaning.

E. Section 08310 - Access Doors and Panels.

F. Section 09900 - Painting.

G. All Division 15 Sections.

1.3 REFERENCES

A. ASME A13.1 - Pipe Labeling Requirements.

B. ASME B1.20.1 - National Pipe Thread Taper.

C. ASME B16.21 - Nonmetallic Flat Gaskets for Pipe Flanges.

D. ANSI/ASME B18.2.1 - Square and Hex Bolts and Screws.

E. ASTM A47 - Ferritic Malleable Iron Castings.

F. ASTM A53 - Pipe, Steel, Black and Hot-Dipped, Zinc-Coated, Welded and Seamless.

G. ASTM A126 - Gray Iron Castings for Valves, Flanges, and Pipe Fittings.

H. ASTM A536 - Ductile Iron Castings.

I. ASTM B32 - Solder Metal.

J. ASTM C1107/C1107M - Packaged Dry, Hydraulic-Cement Grout (Nonshrink).

K. ASTM D709 - Laminated Thermosetting Materials.

L. ASTM D1785 - Poly(Vinyl Chloride) (PVC) Plastic Pipe, Schedules 40, 80, and 120.

M. ASTM D2235 - Solvent Cement for Acrylonitrile-Butadiene-Styrene (ABS) Plastic Pipe and Fittings.

N. ASTM D2564 - Solvent Cements for Poly(Vinyl Chloride) (PVC) Plastic Piping Systems.

O. ASTM D3138 - Solvent Cements for Transition Joints Between Acrylonitrile-Butadiene-Styrene (ABS) and Poly(Vinyl Chloride) (PVC) Non-Pressure Piping Components.

P. ASTM F477 - Elastomeric Seals (Gaskets) for Joining Plastic Pipe.

Q. ASTM F493 - Solvent Cements for Chlorinated Poly(Vinyl Chloride) (CPVC) Plastic Pipe and Fittings.

R. ASTM F656 - Primers for Use in Solvent Cement Joints of Poly(Vinyl Chloride) (PVC) Plastic Pipe and Fittings.

S. AWS A5.8 - Filler Metals for Brazing and Braze Welding.

T. AWS D1.1 - Structural Welding Code – Steel.

U. AWS D10.12 - Guide for Welding Mild Steel Pipe.

V. AWWA C110 - Standard for Ductile Iron and Gray Iron.

W. AWWA C111 - Standard for Rubber-Gasket Joints for Ductile Iron Pressure Pipe and Fittings.

1.4 DEFINITIONS

A. Finished Spaces: Spaces other than mechanical and electrical equipment rooms, furred spaces, pipe and duct shafts, unheated spaces immediately below roof, spaces above ceilings, unexcavated spaces, crawl spaces, and tunnels.

B. Exposed, Interior Installations: Exposed to view indoors. Examples include finished occupied spaces and mechanical equipment rooms.

C. Exposed, Exterior Installations: Exposed to view outdoors, or subject to outdoor ambient temperatures and weather conditions. Examples include rooftop locations.

D. Concealed, Interior Installations: Concealed from view and protected from physical contact by building occupants. Examples include above ceilings and in duct shafts.

E. Concealed, Exterior Installations: Concealed from view and protected from weather conditions and physical contact by building occupants, but subject to outdoor ambient temperatures. Examples include installations within unheated shelters.

F. Industry Abbreviations for Plastic Materials:
   1. ABS: Acrylonitrile-butadiene-styrene plastic.
   2. CPVC: Chlorinated polyvinyl chloride plastic.
   3. NP: Nylon plastic.
   4. PE: Polyethylene plastic.
   5. PVC: Polyvinyl chloride plastic.

G. Industry Abbreviations for Rubber Materials:
   1. CR: Chlorosulfonated polyethylene synthetic rubber.
   2. EPDM: Ethylene propylene diene terpolymer rubber.

1.5 SUBMITTALS

A. General: Submit in accordance with Section 01300.

B. Product Data: For dielectric fittings, flexible connectors, mechanical sleeve seals, and identification materials and devices.

C. Shop Drawings: Detail fabrication and installation for metal and wood supports and anchorage for mechanical materials and equipment.

D. Samples: Of color, lettering style, and other graphic representation required for each identification material and device.

E. Informational Submittals: Submit following:
   1. Coordination Drawings: For access panel and door locations.
   2. Coordination Drawings: Detail major elements, components, and systems of mechanical equipment and materials in relationship with other systems, installations, and building components. Show space requirements for installation and access. Indicate if sequence and coordination of installations are important to efficient flow of Work. Include following:
      a. Planned piping layout, including valve and specialty locations and valve-stem movement.
      b. Clearances for installing and maintaining insulation.
      c. Clearances for servicing and maintaining equipment, accessories, and specialties, including space for disassembly required for periodic maintenance.
      d. Equipment and accessory service connections and support details.
      e. Exterior wall and foundation penetrations.
      f. Fire-rated wall and floor penetrations.
      g. Sizes and location of required concrete pads and bases.
      h. Scheduling, sequencing, movement, and positioning of large equipment into building during construction.

i. Floor plans, elevations, and details to indicate penetrations in floors, walls, and ceilings and their relationship to other penetrations and installations.
j. Reflected ceiling plans to coordinate and integrate installation of air outlets and inlets, light fixtures, communication system components, sprinklers, and other ceiling-mounted items.

1.6 QUALITY ASSURANCE

A. Comply with ASME A13.1 for lettering size, length of color field, colors, and viewing angles of identification devices.

B. Equipment Selection: Equipment of higher electrical characteristics, physical dimensions, capacities, and ratings may be furnished provided such proposed equipment is approved in writing and connecting mechanical and electrical services, circuit breakers, conduit, motors, bases, and equipment spaces are increased. If minimum energy ratings or efficiencies of equipment are specified, equipment must meet design and commissioning requirements.

1.7 DELIVERY, STORAGE, AND HANDLING

A. General: Comply with Section 01600.
1. Deliver pipes and tubes with factory-applied end caps. Maintain end caps through shipping, storage, and handling to prevent pipe end damage and prevent entrance of dirt, debris, and moisture.
2. Protect stored pipes and tubes from moisture and dirt. Elevate above grade. Do not exceed structural capacity of floor, if stored inside.
3. Protect flanges, fittings, and piping specialties from moisture and dirt.
4. Store plastic pipes protected from direct sunlight. Support to prevent sagging and bending.

1.8 SEQUENCING AND SCHEDULING

A. Coordinate mechanical equipment installation with other building components.

B. Arrange for pipe spaces, chases, slots, and openings in building structure during progress of construction to allow for mechanical installations.

C. Coordinate installation of required supporting devices and set sleeves in poured-in-place concrete and other structural components, as they are constructed.

D. Coordinate requirements for access panels and doors if mechanical items requiring access are concealed behind finished surfaces. Access panels and doors are specified in Section 08310 - Access Doors and Panels.

E. Coordinate installation of identifying devices after completing covering and painting, if devices are applied to surfaces. Install identifying devices before installing acoustical ceilings and similar concealment.

1.9 COORDINATION (Unless specifically noted otherwise)

A. The General Contractor shall be responsible for providing openings in the building roof, floors and walls for all mechanical ducts and piping.

B. The Electrical Contractor shall be responsible for all starters, disconnects, power-control panels and other electrical devices necessary for the proper operation of the mechanical equipment.
   1. The Mechanical Contractor shall be responsible for all mechanical system's control wiring, 24 volt and below.

PART 2 PRODUCTS

2.1 MANUFACTURERS

A. Acceptable Manufacturers:
   1. Dielectric Unions:
      a. Central Plastics Co.
      b. Epco Sales Inc.
      c. Watts Industries, Inc.; Water Products Div.
      d. Zurn Industries, Inc.; Wilkins Div.
      e. Accepted Substitute in accordance with Section 01600.
   2. Dielectric Flanges:
      a. Central Plastics Co.
      b. Epco Sales Inc.
      c. Watts Industries, Inc.; Water Products Div.
      d. Accepted Substitute in accordance with Section 01600.
   3. Dielectric-Flange Insulating Kits:
      a. Calpico, Inc.
      b. Central Plastics Co.
      c. Accepted Substitute in accordance with Section 01600.
   4. Dielectric Couplings:
      a. Calpico, Inc.
      b. Lochinvar Corp.
      c. Accepted Substitute in accordance with Section 01600.
   5. Dielectric Nipples:
      a. Grinnell Corp.; Grinnell Supply Sales Co.
      b. Perfection Corp.
      c. Victaulic Co. of America.
      d. Accepted Substitute in accordance with Section 01600.
   6. Metal, Flexible Connectors:
      a. Flexicraft Industries.
      b. Flex-Weld, Inc.
      c. Grinnell Corp.; Grinnell Supply Sales Co.
      d. Mercer Rubber Co.
      e. Metraflex Co.
      f. Uniflex, Inc.
      g. Accepted Substitute in accordance with Section 01600.
   7. Rubber, Flexible Connectors:
      a. General Rubber Corp.
      b. Mercer Rubber Co.
      c. Metraflex Co.
      d. Proco Products, Inc.
      e. Accepted Substitute in accordance with Section 01600.

2.2 PIPE AND PIPE FITTINGS

A. Refer to individual Division 15 piping Sections for pipe and fitting materials and joining methods.

B. Pipe Threads: ASME B1.20.1 for factory-threaded pipe and pipe fittings.

2.3 JOINING MATERIALS

A. Refer to individual Division 15 piping Sections for special joining materials not listed below.

B. Pipe-Flange Gasket Materials: Suitable for chemical and thermal conditions of piping system contents.
   1. ASME B16.21, nonmetallic, flat, asbestos-free, 1/8-inch maximum thickness, unless thickness or specific material is indicated.
      a. Full-Face Type: For flat-face, Class 125, cast-iron and cast-bronze flanges.
      b. Narrow-Face Type: For raised-face, Class 250, cast-iron and steel flanges.
   2. AWWA C110, rubber, flat face, 1/8 inch thick, unless otherwise indicated; and full-face or ring type, unless otherwise indicated.

C. Flange Bolts and Nuts: ASME B18.2.1, carbon steel, unless otherwise indicated.

D. Plastic, Pipe-Flange Gasket, Bolts, and Nuts: Type and material recommended by piping system manufacturer, unless otherwise indicated.

E. Solder Filler Metals: ASTM B32.
   1. Alloy S65: Approximately 95 percent tin and 5 percent antimony, with 0.20 percent maximum lead content.
   2. Alloy HA: Tin-antimony-silver-copper zinc, with 0.10 percent maximum lead content.
   3. Alloy HB: Tin-antimony-silver-copper nickel, with 0.10 percent maximum lead content.

F. Brazing Filler Metals: AWS A5.8.
   1. BCuP Series: Copper-phosphorus alloys.
   2. BAg1: Silver alloy.

G. Welding Filler Metals: Comply with AWS D10.12 for welding materials appropriate for wall thickness and chemical analysis of steel pipe being welded.

H. Solvent Cements: Manufacturer's standard solvent cements for following:
   1. ABS Piping: ASTM D2235.
   2. CPVC Piping: ASTM F493.
   3. PVC Piping: ASTM D2564. Include primer according to ASTM F656.
   4. PVC to ABS Piping Transition: ASTM D3138.

I. Plastic Pipe Seals: ASTM F477, elastomeric gasket.

J. Flanged, Ductile-Iron Pipe Gasket, Bolts, and Nuts: AWWA C110, rubber gasket, carbon-steel bolts and nuts.

K. Couplings: Iron-body sleeve assembly, fabricated to match OD of plain-end, pressure pipes.
   1. Sleeve: ASTM A126, Class B, gray iron.
   2. Followers: ASTM A47 malleable iron or ASTM A536 ductile iron.
   3. Gaskets: Rubber.
   4. Bolts and Nuts: AWWA C111.
   5. Finish: Enamel paint.

2.4 DIELECTRIC FITTINGS

A. General: Assembly or fitting with insulating material isolating joined dissimilar metals, to prevent galvanic action and stop corrosion.

B. Description: Combination of copper alloy and ferrous; threaded, solder, plain, and weld-neck end types and matching piping system materials.

C. Insulating Material: Suitable for system fluid, pressure, and temperature.

D. Dielectric Unions: Factory-fabricated, union assembly, for 250-PSIG minimum working pressure at 180 F.

E. Dielectric Flanges: Factory-fabricated, companion-flange assembly, for 150- or 300-PSIG minimum working pressure as required to suit system pressures.

F. Dielectric-Flange Insulation Kits: Field-assembled, companion-flange assembly, full-face or ring type. Components include neoprene or phenolic gasket, phenolic or polyethylene bolt sleeves, phenolic washers, and steel backing washers.
   1. Provide separate companion flanges and steel bolts and nuts for 150- or 300-PSIG minimum working pressure as required to suit system pressures.

G. Dielectric Couplings: Galvanized-steel coupling with inert and noncorrosive, thermoplastic lining; threaded ends; and 300-PSIG minimum working pressure at 225 F.

H. Dielectric Nipples: Electroplated steel nipple with inert and noncorrosive, thermoplastic lining; plain, threaded, or grooved ends; and 300-PSIG minimum working pressure at 225 F.

2.5 FLEXIBLE CONNECTORS

A. General: Fabricated from materials suitable for system fluid and that will provide flexible pipe connections. Include 125-PSIG minimum working-pressure rating, unless higher working pressure is indicated, and ends according to following:
   1. 2-Inch NPS and Smaller: Threaded.
   2. 2-1/2-Inch NPS and Larger: Flanged.
   3. Option for 2-1/2-Inch NPS and Larger: Grooved for use with keyed couplings.

B. Bronze-Hose, Flexible Connectors: Corrugated, bronze, inner tubing covered with bronze wire braid. Include copper-tube ends or bronze flanged ends, braze welded to hose.

C. Stainless-Steel-Hose/Steel Pipe, Flexible Connectors: Corrugated, stainless-steel, inner tubing covered with stainless-steel wire braid. Include steel nipples or flanges, welded to hose.

D. Stainless-Steel-Hose/Stainless-Steel Pipe, Flexible Connectors: Corrugated, stainless-steel, inner tubing covered with stainless-steel wire braid. Include stainless-steel nipples or flanges, welded to hose.

E. Rubber, Flexible Connectors: CR or EPDM elastomer rubber construction, with multiple plies of NP fabric, molded and cured in hydraulic presses. Include 125-PSIG minimum working-pressure rating at 220 F. Units may be straight or elbow type, unless otherwise indicated.

2.6 MECHANICAL SLEEVE SEALS

A. Description: Modular design, with interlocking rubber links shaped to continuously fill annular space between pipe and sleeve. Include connecting bolts and pressure plates.

2.7 PIPING SPECIALTIES

A. Sleeves: Following materials are for wall, floor, slab, and roof penetrations:
   1. Steel Sheet Metal: 0.0239-inch minimum thickness, galvanized, round tube closed with welded longitudinal joint.
   2. Steel Pipe: ASTM A53, Type E, Grade A, Schedule 40, galvanized, plain ends.
   3. Cast Iron: Cast or fabricated wall pipe equivalent to ductile-iron pressure pipe, with plain ends and integral waterstop, unless otherwise indicated.
   4. Stack Sleeve Fittings: Manufactured, cast-iron sleeve with integral clamping flange. Include clamping ring and bolts and nuts for membrane flashing.
      a. Underdeck Clamp: Clamping ring with set screws.
   5. PVC: Manufactured, permanent, with nailing flange for attaching to wooden forms.
   6. PVC Pipe: ASTM D1785, Schedule 40.
   7. PE: Manufactured, reusable, tapered, cup shaped, smooth outer surface, with nailing flange for attaching to wooden forms.

B. Escutcheons: Manufactured wall, ceiling, and floor plates; deep-pattern type if required to conceal protruding fittings and sleeves.
   1. ID: Closely fit around pipe, tube, and insulation of insulated piping.
   2. OD: Completely cover opening.
   3. Cast Brass: One piece, with set screw.
      a. Finish: Polished chrome-plate.
   4. Cast Brass: Split casting, with concealed hinge and set screw.
      a. Finish: Polished chrome-plate.
   5. Stamped Steel: One piece, with spring clips and chrome-plated finish.
   6. Stamped Steel: Split plate, with concealed hinge, set screw, and chrome-plated finish.
   7. Cast-Iron Floor Plate: One-piece casting.

2.8 IDENTIFYING DEVICES AND LABELS

A. General: Manufacturer's standard products of categories and types required for each application as referenced in other Division 15 Sections. If more than one type is specified for application, selection is Installer's option, but provide one selection for each product category.

B. Equipment Nameplates: Metal nameplate with operational data engraved or stamped; permanently fastened to equipment.
   1. Data: Manufacturer, product name, model number, serial number, capacity, operating and power characteristics, labels of tested compliances, and similar essential data.
   2. Location: Accessible and visible location.

C. Stencils: Standard stencils, prepared for required applications with letter sizes complying with recommendations of ASME A13.1 for piping and similar applications, but not less than 1-1/4-inch- high letters for ductwork and not less than 3/4-inch- high letters for access door signs and similar operational instructions.
   1. Material: Fiberboard.
   2. Stencil Paint: Standard exterior-type stenciling enamel; black, unless otherwise indicated; either brushing grade or pressurized spray-can form and grade.
   3. Identification Paint: Standard identification enamel of colors indicated or, if not otherwise indicated for piping systems, comply with ASME A13.1 for colors.

D. Snap-on Plastic Pipe Markers: Manufacturer's standard preprinted, semirigid, snap on, color-coded, ASME A13.1.

E. Pressure-Sensitive Pipe Markers: Manufacturer's standard preprinted, permanent adhesive, color-coded, pressure-sensitive vinyl, ASME A13.1.

F. Plastic Duct Markers: Manufacturer's standard color-coded, laminated plastic. Comply with following color code:
   1. Green: Cold air.
   2. Yellow: Hot air.
   3. Yellow/Green or Green: Supply air.
   4. Blue: Exhaust, outside, return, and mixed air.
   5. For hazardous exhausts, use colors and designs recommended by ASME A13.1.
   6. Nomenclature: Include following:
      a. Direction of airflow.
      b. Duct service.
      c. Duct origin.
      d. Duct destination.
      e. Design cubic feet per minute.

G. Engraved Plastic-Laminate Signs: ASTM D709, Type I, cellulose, paper-base, phenolic-resin-laminate engraving stock; Grade ES-2, black surface, black phenolic core, with white melamine subcore, unless otherwise indicated.
   1. Fabricate in sizes required for message.
   2. Engraved with engraver's standard letter style, of sizes and with wording to match equipment identification.
   3. Punch for mechanical fastening.
   4. Thickness: 1/16 inch, for units up to 20 square inches or 8 inches long; 1/8 inch for larger units.
   5. Fasteners: Self-tapping stainless-steel screws or contact-type permanent adhesive.

H. Plastic Equipment Markers: Color-coded, laminated plastic. Comply with following color code:
   1. Green: Cooling equipment and components.
   2. Yellow: Heating equipment and components.
   3. Yellow/Green: Combination cooling and heating equipment and components.
   4. Brown: Energy reclamation equipment and components.
   5. Blue: Equipment and components that do not meet any criteria above.
   6. For hazardous equipment, use colors and designs recommended by ASME A13.1.
   7. Nomenclature: Include following, matching terminology on schedules as closely as possible:
      a. Name and plan number.
      b. Equipment service.

c. Design capacity.
d. Other design parameters such as pressure drop, entering and leaving conditions, and RPM.

8. Size: Approximate 2-1/2 by 4 inches for control devices, dampers, and valves; and 4-1/2 by 6 inches for equipment.

I. Lettering and Graphics: Coordinate names, abbreviations, and other designations used in mechanical identification, with corresponding designations indicated. Use numbers, lettering, and wording indicated for proper identification and operation/maintenance of mechanical systems and equipment.

1. Multiple Systems: If multiple systems of same generic name are indicated, provide identification that indicates individual system number and service such as **BOILER NO. 3, AIR SUPPLY NO. 1H**, or **STANDPIPE F12**.

2.9 ACCESS DOORS

A. Access Doors and Panels: As specified in Section 08310 – Access Doors and Panels.

2.10 GROUT

A. Nonshrink, Nonmetallic Grout: ASTM C1107, Grade B.

1. Characteristics: Post-hardening, volume-adjusting, dry, hydraulic-cement grout, nonstaining, noncorrosive, nongaseous, and recommended for interior and exterior applications.
2. Design Mix: 5000-PSIG, 28-day compressive strength.
3. Packaging: Premixed and factory packaged.

PART 3 EXECUTION

3.1 PIPING SYSTEMS - COMMON REQUIREMENTS

A. General: Install piping as described below, unless piping Sections specify otherwise. Individual Division 15 piping Sections specify unique piping installation requirements.

B. General Locations and Arrangements: Drawing plans, schematics, and diagrams indicate general location and arrangement of piping systems. Indicated locations and arrangements were used to size pipe and calculate friction loss, expansion, pump sizing, and other design considerations. Install piping as indicated, unless deviations to layout are approved on Coordination Drawings.

1. Install piping at indicated slope.
2. Install components with pressure rating equal to or greater than system operating pressure.
3. Install piping in concealed interior and exterior locations, except in equipment rooms and service areas.
4. Install piping free of sags and bends.
5. Install exposed interior and exterior piping at right angles or parallel to building walls. Diagonal runs not allowed, unless otherwise indicated.
6. Install piping tight to slabs, beams, joists, columns, walls, and other building elements. Allow sufficient space above removable ceiling panels to allow for ceiling panel removal.
7. Install piping to allow application of insulation plus 1-inch clearance around insulation.
8. Locate groups of pipes parallel to each other, spaced to permit valve servicing.
9. Install fittings for changes in direction and branch connections.

10. Install couplings according to manufacturer's recommendations.
11. Install pipe escutcheons for pipe penetrations of concrete and masonry walls, wall board partitions, and suspended ceilings according to following:
    a. Chrome-Plated Piping: Cast brass, one piece, with set screw, and polished chrome-plated finish. Use split-casting escutcheons if required, for existing piping.
    b. Uninsulated Piping Wall Escutcheons: Stamped steel, with set screw.
    c. Uninsulated Piping Floor Plates in Utility Areas: Cast-iron floor plates.
    d. Insulated Piping: Stamped steel; with concealed hinge, spring clips, and chrome-plated finish.
    e. Piping in Utility Areas: Stamped steel, with set-screw or spring clips, and chrome-plated finish.

C. Aboveground, Exterior-Wall, Pipe Penetrations: Seal penetrations using sleeves and mechanical sleeve seals. Size sleeve for 1-inch annular clear space between pipe and sleeve for installing mechanical sleeve seals.
    1. Install steel pipe for sleeves smaller than 6 inches in diameter.
    2. Install cast-iron wall pipes for sleeves 6 inches in diameter and larger.
    3. Assemble and install mechanical sleeve seals according to manufacturer's recommendations. Tighten bolts that cause rubber sealing elements to expand and make watertight seal.

D. Fire-Barrier Penetrations: Maintain indicated fire rating of walls, partitions, ceilings, and floors at pipe penetrations. Seal pipe penetrations with firestopping materials. Comply with Section 07840 - Firestopping.

E. Verify final equipment locations for roughing-in.

F. Refer to equipment specifications in other Sections of these Specifications for roughing-in requirements.

G. Piping Joint Construction: Join pipe and fittings as follows and as specifically required in individual piping specification Sections:
    1. Ream ends of pipes and tubes and remove burrs. Bevel plain ends of steel pipe.
    2. Remove scale, slag, dirt, and debris from inside and outside of pipe and fittings before assembly.
    3. Soldered Joints: Construct joints according to AWS Soldering Manual, Chapter The Soldering of Pipe and Tube; or CDA's Copper Tube Handbook.
    4. Brazed Joints: Construct joints according to AWS Brazing Handbook, Chapter Pipe and Tube.
    5. Threaded Joints: Thread pipe with tapered pipe threads according to ASME B1.20.1. Cut threads full and clean using sharp dies. Ream threaded pipe ends to remove burrs and restore full ID. Join pipe fittings and valves as follows:
        a. Note internal length of threads in fittings or valve ends, and proximity of internal seat or wall, to determine how far pipe should be threaded into joint.
        b. Apply appropriate tape or thread compound to external pipe threads, unless dry seal threading is specified.
        c. Align threads at point of assembly.
        d. Tighten joint with wrench. Apply wrench to valve end into which pipe is being threaded.
        e. Damaged Threads: Do not use pipe or pipe fittings with threads that are corroded or damaged. Do not use pipe sections that have cracked or open welds.

6. Welded Joints: Construct joints according to AWS D10.12 - Recommended Practices and Procedures for Welding Low Carbon Steel Pipe, using qualified processes and welding operators according to Quality Assurance Article.
7. Flanged Joints: Align flange surfaces parallel. Select appropriate gasket material, size, type, and thickness for service application. Install gasket concentrically positioned. Assemble joints by sequencing bolt tightening to make initial contact of flanges and gaskets as flat and parallel as possible. Use suitable lubricants on bolt threads. Tighten bolts gradually and uniformly using torque wrench.

H. Piping Connections: Make connections according to following, unless otherwise indicated:
1. Install unions, in piping 2-inch NPS and smaller, adjacent to each valve and at final connection to each piece of equipment with 2-inch NPS or smaller threaded pipe connection.
2. Install flanges, in piping 2-1/2-inch NPS and larger, adjacent to flanged valves and at final connection to each piece of equipment with flanged pipe connection.
3. Dry Piping Systems: Install dielectric unions and flanges to connect piping materials of dissimilar metals.
4. Wet Piping Systems: Install dielectric coupling and nipple fittings to connect piping materials of dissimilar metals.

3.2 EQUIPMENT INSTALLATION - COMMON REQUIREMENTS

A. Equipment that has been stored on-site and has not been kept dry or clean from mud and debris and shows signs of damage including rusting, dirt or wet insulation shall be removed and replaced with new.

B. Install equipment to provide maximum possible headroom, if mounting heights are not indicated.

C. Install equipment according to approved submittal data. Portions of Work are shown only in diagrammatic form. Refer conflicts to Architect.

D. Install equipment level and plumb, parallel and perpendicular to other building systems and components in exposed interior spaces, unless otherwise indicated.

E. Install mechanical equipment to facilitate service, maintenance, and repair or replacement of components. Connect equipment for ease of disconnecting, with minimum interference to other installations. Extend grease fittings to accessible locations.

F. Install equipment giving right of way to piping installed at required slope.

G. Install flexible connectors on equipment side of shutoff valves, horizontally and parallel to equipment shafts if possible.

3.3 PAINTING AND FINISHING

A. General Comply with Section 09900 – Painting, for paint materials, surface preparation, and application of paint.

B. Apply paint to exposed piping according to following, unless otherwise indicated:
1. Interior, Ferrous Piping: Use semigloss, acrylic-enamel finish. Include finish coat over enamel undercoat and primer.

2. Interior, Galvanized-Steel Piping: Use semigloss, acrylic-enamel finish. Include two finish coats over galvanized metal primer.
3. Interior, Ferrous Supports: Use semigloss, acrylic-enamel finish. Include finish coat over enamel undercoat and primer.
4. Exterior, Ferrous Piping: Use semigloss, acrylic-enamel finish. Include two finish coats over rust-inhibitive metal primer.
5. Exterior, Galvanized-Steel Piping: Use semigloss, acrylic-enamel finish. Include two finish coats over galvanized metal primer.
6. Exterior, Ferrous Supports: Use semigloss, acrylic-enamel finish. Include two finish coats over rust-inhibitive metal primer.

C. Do not paint piping specialties with factory-applied finish.

D. Damage and Touchup: Repair marred and damaged factory-painted finishes with materials and procedures to match original factory finish.

3.4 ACCESS DOORS

A. Access Doors and Panels: Furnish for installation as specified in Section 08310 – Access Doors and Panels.

3.5 ERECTION OF METAL SUPPORTS AND ANCHORAGE

A. Cut, fit, and place miscellaneous metal supports accurately in location, alignment, and elevation to support and anchor mechanical materials and equipment.

B. Field Welding: Comply with AWS D1.1 - Structural Welding Code--Steel.

3.6 DEMOLITION

A. Disconnect, demolish, and remove Work specified in Division 15 Sections.

B. If pipe, ductwork, insulation, or equipment to remain is damaged or disturbed, remove damaged portions and install new products of equal capacity and quality.

C. Accessible Work: Remove indicated exposed pipe and ductwork in its entirety.

D. Work Abandoned in Place: Cut and remove underground pipe minimum of 2 inches beyond face of adjacent construction. Cap and patch surface to match existing finish.

E. Removal: Remove indicated equipment from Project site.

F. Temporary Disconnection: Remove, store, clean, reinstall, reconnect, and make operational equipment indicated for relocation.

3.7 CUTTING AND PATCHING

A. General: Comply with Section 01732. Cut, channel, chase, and drill floors, walls, partitions, ceilings, and other surfaces necessary for mechanical installations. Perform cutting by skilled mechanics of trades involved.
   1. Repair cut surfaces to match adjacent surfaces.

3.8 GROUTING

A. Install nonmetallic, nonshrink, grout for mechanical equipment base bearing surfaces, pump and other equipment base plates, and anchors. Mix grout according to manufacturer's recommendations.
   1. Clean surfaces that will come into contact with grout.
   2. Provide forms as required for placement of grout.
   3. Avoid air entrapment during placing of grout.
   4. Place grout, completely filling equipment bases.
   5. Place grout on concrete bases to provide smooth bearing surface for equipment.
   6. Place grout around anchors.
   7. Cure placed grout according to manufacturer's recommendations.

3.9 CLEANING

A. General: Comply with Section 01740.

END OF SECTION

SECTION 15060

HANGERS AND SUPPORTS

PART 1 GENERAL

1.1 DESCRIPTION

A. Furnish and install all miscellaneous appurtenances as indicated on the Drawings and specified herein.

B. General
1. Drawings show general arrangement, direction, and size of pipes and are not intended to show every offset, valve, and fitting, or every structural difficulty that may be encountered. Install the piping and appurtenances to suit. Verify all measurements at the Site.

1.2 RELATED WORK SPECIFIED ELSEWHERE:

A. Other sections of the specifications, not referenced below, shall also apply to the extent required for proper performance of this work.

B. Section 01300 – Submittals

C. Section 15050 – Basic Material and Methods

D. Section 15200 – Process Pipe

E. Drawing Plans

1.3 QUALITY ASSURANCE

A. Qualifications of manufacturer: Products used in the Work of this Section shall be produced by manufacturers regularly engaged in the manufacture of similar items and with a history of successful production acceptable to ENGINEER.

B. Qualifications of installers: Use adequate numbers of skilled workmen who are thoroughly trained and experienced in the necessary crafts and who are completely familiar with the specified requirements and the methods needed for proper performance of the Work of this section.

C. Basis of acceptance: The manufacturer's recommended installation procedures, when approved by ENGINEER, will become the basis for inspecting and accepting or rejecting actual installation procedures used for this work.

1.4 REFERENCE STANDARDS

A. ASTM A53 for carbon steel pipe.

B. ASTM A312/A312M for stainless steel pipe.

C. ASTM D1785 for polyvinyl chloride (PVC) pipe.

D. BOCA Basic/National Plumbing Code

E. Mechanical Code of New York State

F. Manufacturer's Standardization Society of the Valve and Fittings Industry (MSS) Standard Practice SP-58 (Hangers and Supports).

G. MSS Standard Practice SP-69 - Selection of Hangers and Supports.

H. MSS Standard Practice SP-58 - Pipe Hangers and Supports - Materials, Design and Manufacturer.

I. MSS Standard Practice SP-89 - Pipe Hangers and Supports - Fabrication and Installation Practices.

J. Nayyar Mohinder L., P.E.: Piping Handbook, Seventh Edition, (New York: McGraw-Hill; 2000).

K. AWS D1.1-Structural Welding Code

L. Conform to the general requirements of ASME B31.3 concerning Chemical Plant and Petroleum Refinery Piping.

1.5 SUBMITTALS

A. The following shall be submitted:
   1. Descriptive literature from the manufacturers detailing all pipe hangers and supports.

B. Shop Drawings
   1. Submit complete sets of shop drawings of all items to be furnished under Section 15060, including complete layouts, schedules, location plans, and complete total bill of materials for all pipe support systems in accordance with this section and Section 01300. Submittals shall include a representative catalog cut for each different type of item indicating the materials of construction, important dimensions and range of pipe sizes for which that item is suitable. Complete piping drawings as submitted for each piping submittal indicating type of support and location.
   2. Where standard items are not suitable, submit detailed drawings showing materials and details of construction for each type of special item. Show also revisions to support, restraint, and expansion system resulting from changes in related piping system layout, or addition of flexible joints. Provide detailed information on anti-seize compound.
   3. Submit complete design data for all systems under Section 15060 to show conformance with Section 15060.

C. Quality Control Submittals

   1. Submit maintenance information on all items in Section 15060.
   2. All support and appurtenances shall conform to the latest applicable requirements of ASME B31.3 except as supplemented or modified by the requirements of Section 15060.

1.6 DELIVERY, STORAGE, AND PRODUCT HANDLING

A. Shipping:
   1. Ship piping and appurtenances complete except where disassembly is required by transportation regulations or for protection of components.
   2. Pack spare parts in containers bearing labels clearly designating contents and pieces of equipment for which is intended.

B. Replacements: In the event of damage, immediately make all repairs and replacements necessary to the approval of ENGINEER and at no additional cost to ENGINEER.

C. Storage: In accordance with Section 15050 – Basic Material and Methods.

PART 2 PRODUCTS

2.1 GENERAL

A. Proprietary products: References to specified proprietary products are used to establish minimum standards of utility and quality.

B. Unless otherwise approved by ENGINEER, provide only the specific products. Design is based on the materials specified.

2.2 PIPE HANGERS AND SUPPORTS

A. Interior pipe supports shall be intentionally overdesigned, sized, and constructed such that they can safely support pipes that are 100% full of water.

B. Install supports to support pipe, 100% filled with water. Unless otherwise noted on drawings, pipe support spacing shall not exceed 10 ft. Install in accordance with ASTM B31.9, ASTM F708, and MSS SP-89.

C. For beam clamps, install Erico Caddy Model 300 or Kindorf Model E-760 steel clamp with electro-plated finish compatible with the required rod size, or approved equal.

D. For pipe hangers, install Cooper B-Line standard clevis hanger, Model B3100-4 with electro-plated finish and compatible with required rod size or approved equal.

E. For pipe straps, install Cooper B-Line standard pipe strap, Model B2400-4 with electro-plated finish and cold-formed steel channel Unistrut framing and clamp system or approved equal.

F. For pipe stanchions install saddle-type steel pipe stanchion with base plate and U-bolt. Secure base plate to supporting steel. Provide Anvil Part No. 259 or approved equal.

G. Install hangers to provide minimum ½-inch space between finished covering and adjacent Work.

H. Where Unistrut or Kindorf cold formed steel framing systems are specified, 12 ga minimum hot dipped galvanized steel is required. Connection hardware that is compatible with the cold formed system is required.

I. Support pipe within 2 feet of end of all pipe runs.

J. Support riser piping independently of connected horizontal piping.

K. Unless noted on the Construction Drawings, install trapeze and shelves by accepted method. Trapeze hangers constructed of cold-formed steel channel sections are preferred. Cold formed steel channel system shall utilize minimum 12 gage steel members.

L. Wall, Floor, or ceiling sleeves shall not be used to support pipe.

M. Provide additional supports for concentrated loads such as flanges, valves, or specialties, and at changes in direction.

N. Support all valves, fittings, and tubing such that all swing joints make and break freely and such that undue stress is not placed on tubing by valves or other in-line components.

PART 3 EXECUTION

3.1 EXISTING CONDITIONS

A. Inspection:
   1. Prior to all Work of this section, carefully inspect the installed Work of all other trades and verify that all such Work is complete to the point where this installation may properly commence.
   2. Verify that the Work of this section may be installed in accordance with all pertinent codes and regulations, the original design, and the referenced standards.

B. Discrepancies:
   1. In the event of discrepancy, immediately notify ENGINEER.
   2. Do not proceed with installation in areas of discrepancy until all such discrepancies have been fully resolved.

3.2 INSTALLATION

A. General: Install the Work of this section in strict accordance with the manufacturer's recommendations as approved by ENGINEER.

B. The Work of this section shall be installed plumb and perpendicular to piping where required on Construction Drawings.

C. Route piping as shown on the Construction Drawings.

D. Support piping to allow for expansion and contraction at each building expansion joint without stressing pipe or joints.

E. Conform to the general requirements of ASME B31.3 concerning Chemical Plant and Petroleum Refinery Piping.

F. Support piping in an orderly manner maintaining the required elevations.

G. Support piping to conserve building space and not interfere with use of space.

3.3 TESTS

A. Upon completion of this portion of the Work, and prior to its acceptance by ENGINEER, make all required tests and adjustments for free and smooth operation.

3.4 INSTRUCTIONS

A. When all required approvals of this portion of the Work have been obtained, and at a time designated by ENGINEER, thoroughly demonstrate to ENGINEER'S operation and maintenance personnel the operation and maintenance of all items installed under the Work of this section.

3.5 CLEANING

A. Clean exposed surface of all grease, dirt, and other foreign materials.

B. Touch up all marred or abraded surfaces as specified herein.

END OF SECTION

THIS PAGE INTENTIONALLY LEFT BLANK

SECTION 15070

HIGH DENSITY POLYETHYLENE PIPE

PART 1 GENERAL

1.1 DESCRIPTION

A. The work covered in this section includes:

1. Furnishing all labor, equipment, and materials to supply, install, and test prefabricated dual walled high density polyethylene (HDPE) pressure pipe and associated elbows, couplings and transition fittings at locations shown on the drawings and/or specified within. Pipe sizes will be 6-inch diameter carrier in 10-inch diameter containment and 8-inch diameter carrier in 12-inch diameter containment.

1.2 RELATED SECTIONS

A. Section 01300 - Submittals.

B. Section 01400 - Quality Control.

C. Section 15010 – Process Piping and Accessories.

1.3 QUALITY ASSURANCE

A. Material Quality Control:

The pipe and fittings manufacturer shall have an established Quality Assurance (QA) program responsible for inspecting incoming and outgoing materials and assuring the long-term performance of materials and products. All products associated with pipe and fittings included in this specification shall be manufactured in the United States of America. The manufacturer shall certify that HDPE materials have been tested and conform to the physical property requirements as noted in section 2.1 of this Specification. The manufacturer shall include on all pipe materials a production code from which the manufacturing product information can be determined (refer to section 2.2 E
of this Specification). The manufacturer shall provide upon request an explanation of his production code.

1. The manufacturer shall test representative samples of HDPE project materials from each extrusion line and molding machine to certify that the HDPE project materials meet or

exceed the material specifications. At a minimum, HDPE materials shall be tested for density per ASTM D-1505, melt flow rate per ASTM D-1238, and sustained pressure tests in accordance with ASTM D-1598. The manufacturing QA testing for representative pipe and fitting materials and samples shall include:

Test	Standard	Pipe and Fittings
Density	ASTM D-1505	>0.95
Melt flow rate	ASTM D-1238	0.1 gram/10 minutes
Sustained pressure at 140 °F/800 psi hoop stress	ASTM D-1598	(f_0>100 h)
Sustained pressure at 73°F/1600 psi hoop stress	ASTM D-1598	(f_0>1000 h)

2. All pipe materials shall be inspected for diameter, wall thickness, length, straightness, out-of-roundness, concentricity, toe-in, inside and outside surface finish, markings, and end cut. All fabricated fittings shall be inspected for fusion quality and alignment.

3. Pipe may be rejected for failure to conform to Specifications, or any of the following:

   a. Fractures or cracks passing through pipe wall, except single crack not exceeding 2-inches in length at either end of pipe which could be cut off and discarded. All pipes within one shipment shall be rejected if defects exist in more than 5% of shipment or delivery.

   b. Cracks sufficient to impair strength, durability or service ability of pipe.

   c. Defects indicating improper proportioning, mixing, and molding.

   d. Damaged ends, where such damage prevents making satisfactory joint. Scratches and gouges exceeding 10% of the wall thickness shall be considered excessive, and may be rejected by the ENGINEER.

B. Installation Quality Assurance:

1. Installation of the HDPE pipe shall be performed by qualified, experienced work crews and shall comply with the codes and standards of the Plastic Pipe Institute, ASTM F-1668, and the manufacturer's recommendations.

2. The Contractor shall submit the manufacturer's recommended conditions for fusion welding procedures and shall note and maintain a record of the fusion welding conditions for all field welds and have the record available for inspection.

3. The work crew installing the HDPE pipe shall demonstrate their competence with their proposed welding methods by completing not less than three test welds for each size of pipe and method prior to HDPE pipe installation. The temperature, pressure and fabrication conditions associated with each of the test welds shall be recorded. These test welds shall be cut open by the Contractor and inspected by the ENGINEER for quality and conformance with the criteria of sections 1.3 B. 4 and 5 (below). The work crew shall be required to repeat the series of three test welds for each size pipe and method if any of the welds were not acceptable as determined by the ENGINEER.

4. Any HDPE pipe weld that has unfilled areas in the joint, unbonded areas in the joint, or has a protrusion of pipe material more than 25 % of the pipe wall thickness shall be considered sub-standard and shall be rejected. In addition, the joint may also be rejected by the ENGINEER as sub-standard due to the presence of pores or bubbles in the weld, misalignment of the pipe, uneven welds due to uneven or incorrect heating, different HDPE materials, or evidence of incorrect pressure. Sketches of correctly and incorrectly welded HDPE joints that shall be used for guidance are shown in Figure 13.5 of the "Handbook of Double Containment Piping Systems", Christopher G. Ziu, 1995, McGraw-Hill.

5. In addition to a visual inspection of each weld, the Contractor shall demonstrate the integrity of the welding methods by performing a bent strap test on a welded piece of the HDPE pipe. The test strap piece shall be approximately 30 wall thicknesses long with the weld in the center, and 2 wall thicknesses wide. The strap shall be bent so that the ends of the strap touch. Any separation of the bonded joint will be considered to indicate inadequate fusion methods.

6. If the work crew does not produce acceptable test welds, the work crew shall repeat this process and complete a new set of three, acceptable, defect-free, welds for each size HDPE pipe and welding method prior to being accepted as a qualified HDPE installation crew. If the work crew cannot fabricate a complete set of three, acceptable welds for each size pipe and method on the second attempt, the ENGINEER may reject the crew and the Contractor shall obtain a qualified, suitable crew that can pass the welding test. The Contractor shall also perform daily tests of weld integrity at the direction of the ENGINEER to verify that the correct welding protocol is being followed.

7. Acceptance or rejection of welds, fittings, stubs or other specially fabricated pipe sections shall be based on destructive tests and on visual inspection at the job site and documentation of conformance to these Specifications. Rejection of a weld by the

ENGINEER will require that the joint be removed and the weld repeated by the Contractor at no additional cost to the Owner.

8. The ENGINEER may reject any welded joint that, based on the ENGINEER's judgment, does not appear to meet the specifications, the manufacturer's recommended criteria for acceptable welds, or industry accepted criteria for fusion welds. The ENGINEER may use the test welds as guidance on acceptable welds, and may require the Contractor's work crew to repeat a series of test welds at any time to verify that their procedures are producing acceptable welds.

1.4 REFERENCES

A. American Society for Testing and Materials (ASTM)

1. ASTM D638 – Standard Test Methods for Tensile Properties of Plastics

2. ASTM D790 – Standard Test Methods for Flexural Properties of Unreinforced and Reinforced Plastics and Electrical Insulating Materials.

3. ASTM D1238 - Standard Test Method for Flow Rates of Thermoplastics by Extrusion Plastometer.

4. ASTM D1248 - Standard Specification for Polyethylene Plastics Molding and Extrusion Materials.

5. ASTM D1505 - Standard Test Method for Density of Plastics by the Density-Gradient Technique.

6. ASTM D1693 - Standard Test Method for Environmental Stress-Cracking of Ethylene Plastics.

7. ASTM D2122 - Standard Test Method of Determining Dimensions of Thermoplastic Pipe and Fittings.

8. ASTM D 2774 – Underground Installation of Thermoplastic Pressure Piping.

9. ASTM D2837 - Standard Test Method for Obtaining Hydrostatic Design Basis for Thermoplastic Pipe Materials.

10. ASTM D3261 - Standard Specification for Butt Heat Fusion Polyethylene (HDPE) Plastic Fittings for Polyethylene (HDPE) Plastic Pipe and Tubing.

11. ASTM D3350 - Specification for Polyethylene Plastics Pipe and Fittings Material.

12. ASTM F 714 – Specification for Polyethylene Plastic Pipe (SDR-PR) Based on Outside Diameter.

13. ASTM F1055 – Electrofusion-Type Polyethylene Fittings for Outside Diameter Controlled Polyethylene Pipe and Tubing.

14. ASTM F1668 – Construction Procedures for Buried Plastic Pipe.

B. Plastic Pipe Institute:

1. Technical Report #4, PPI Listing of Hydrostatic Design Bases (HDB), Strength Design Bases (SDB), Pressure Design Bases (PDB) and Minimum Required Strength (MRS) Ratings for Thermoplastic Piping Materials or Pipe. (2001c).

2. Handbook of Polyethylene Pipe:

a. Underground Installation of Polyethylene Piping.

b. Polyethylene Joining Procedures.

c. Inspections, Test and Safety Considerations.

1.5 SUBMITTALS

A. The Contractor shall submit a detailed plan for HDPE pipe installation and welding methods for the below grade and utility tunnel installation within three weeks of being awarded the Contract. The plan shall include, but not be limited to, descriptions of the following:

1. Excavation methods.

2. List and description of fusion welding equipment to be used in the installation, including manuals on the proper operation of the equipment.

3. Manfacturer's instructions for fusing joints.

4. Pipe placement methods and pressure testing plan and interval.

5. Qualifications and experience of the pipe installation company and work crew.

B. Manufacturing data including results of the project-specific batch testing and certification of the material's compliance with the specifications of section 2.1. Data should also include the following pipe dimension information:

1. Average outside diameter.

2. Average inside diameter.

3. Minimum and average wall thickness.

C. Test Report for each piping system tested.

D. Submittals shall be in accordance with Section 01300.

1.6 DELIVERY, STORAGE, AND HANDLING

A. The pipe and fitting manufacturer shall package products for shipment in a manner suitable for safe transport by commercial carrier. The Contractor and the ENGINEER shall perform a receiving inspection when the pipe and fittings are delivered, and any shipping damage noted and reported to the manufacturer. Pipe and fittings shall be handled, installed, and tested in accordance with manufacturer's recommendations, and the requirements of this Specification.

B. Pipe Delivery: The ends of the pipe shall be covered during shipment to protect them from exhaust, dirt and other materials.

C. Pipe Storage:

1. Store or stack pipe to prevent damage from marring, crushing or puncture: Limit maximum stacking height to 5 rows or manufacturer's recommendation, whichever is less.

2. Store in accordance with manufacturer's recommendations.

D. Pipe Handling:

1. The pipe shall be unloaded from the truck in a controlled manner without dropping, bending or damaging the pipe.

2. Protect pipe from excessive heat or harmful chemicals.

3. Handle pipe and use equipment as needed to avoid gouging of the pipe surfaces.

PART 2 PRODUCTS

2.1 PHYSICAL PROPERTIES OF PIPE RESIN

A. Materials used for the manufacture of HDPE pipe and fittings shall meet the following physical property requirements.

Property	Unit	Test Procedure	Value
PPI Material Listing		PPI TR-4	HDPE 3408
Material Classification	-	ASTM D-1248	III C 5 P34
Cell Classification	-	ASTM D-3350	345434C
Density	g/cm^3	ASTM D-1505	>0.95
Melt Index	g/10 min	ASTM D-1238	<0.15
Flexural Modulus	psi	ASTM D-790	>110,000 and <160,000
Tensile Strength	psi	ASTM D-638	3000 to 3500
ESCR	hours	ASTM D-1693	f0>5000
HDB	psi	ASTM D-2837	1600 @ 73.4 °F
HDS	psi	PPI TR-4	800 @ 140°F
UV Stabilizer	% Carbon	ASTM D-1603	2 to 3
Elastic Modulus	psi	ASTM D-638	110,000
Brittleness Temperature	°F	ASTM D-746	<-180
Vicat Softening	°F	ASTM D-1525	255
Thermal Expansion	in/in/ °F	ASTM D-696	9 x 10E^{-5}
Hardness	Shore D	ASTM D-2240	65
Molecular Weight Category	-	-	Extra High

B. The pipe and fittings shall be homogenous throughout and free from visible cracks, holes, foreign inclusions or other injurious defects. The pipe shall be as uniform as commercially practical in color, opacity, density and other physical properties.

C. Clean reworked or recycled material generated by the manufacturer's own production may be used so long as the pipe or fittings produced meet all the requirements of this Specification.

D. The manufacturer will furnish a certificate of conformance of these specifications upon request as the basis of the acceptance of the material.

2.2 PIPE

A. Dimensions

1. Pipe Dimensions: The nominal inside diameter of the pipe shall be true to the specified pipe size in accordance with ASTM F 714. Standard laying lengths shall be 40 feet ± 2 inches.

2. Fitting Dimensions: Fittings such as couplings, wyes, tees, adaptors, etc. for use in laying pipe shall have standard dimensions that conform to ASTM D-3261.

3. Standard Dimension Ratio (SDR) for all diameter HDPE pipes: SDR-17.

B. The same manufacturer should produce both the pipe and fittings from identical materials if possible in meeting the requirements of this specification. Special or custom fittings may be exempted from this requirement; refer to section 2.3 C.

C. Pipe and fittings shall be pressure rated to meet the service pressure requirements specified by the ENGINEER. Whether molded or fabricated, fittings shall be fully pressure rated to at least
the same service pressure rating as the pipe to which joining is intended.

D. Molded fittings shall meet the requirements of ASTM D-3261 and this specification. At the point of fusion, the outside diameter and minimum wall thickness of butt fusion outlets shall meet the diameter and wall thickness specifications of the mating system pipe. Fitting markings shall include a production code from which the location and date of manufacture can be determined. Upon request, the manufacturer shall provide an explanation of his production code.

E. Markings:

Each standard and random length of pipe and fitting in compliance with the specified standards shall be clearly marked with the following information at intervals of 5 feet or less:

Manufacturer's name or trademark.

1. Nominal pipe size.

2. Type of plastic pipe (i.e., HDPE 3408).

3. Standard dimension ratio.

4. Extrusion date, period of manufacture or lot, or batch number.

5. ASTM Standard Designation

2.3 FITTINGS

A. Fittings from polyethylene compound shall have cell classification equal to or exceeding compound used in pipe to ensure compatibility of polyethylene resins.

B. The same manufacturer should produce both the pipe and fittings from identical materials if possible in meeting the requirements of this Specification. Special or custom fittings may be exempted from this requirement. The manufacturer shall certify that the HDPE materials used in the fittings comply with the properties noted in Section 2.1.

C. Dimensions of fittings conforming to standard dimensions and tolerances in accordance with ASTM D3261.

D. Markings shall be the same as noted for pipe in the previous section.

E. Provide factory-fabricated transition fittings. All transition fittings shall be constructed to allow for free movement between the different pipe materials.

F. The Drawings do not show all fittings that may be required. Contractor shall provide all fittings as required for a complete installation.

2.4 GASKETS,HARDWARE

A. All gaskets shall be Viton or approved equal. Joint hardware and flange backing rings shall be 304 stainless steel.

PART 3 EXECUTION

3.1 INSTALLATION

A. General Installation Criteria

1. Installation of the HDPE pipe and transition fittings shall be completed to allow for separate movement of the pipe and fittings in the event of differential thermal expansion between the different materials.

2. Assembly of the HDPE pipe and fittings shall be completed with fusion welding procedures recommended by the manufacturer and approved by the ENGINEER. The fusion welding equipment shall include, but will not be limited to, butt-fusion welding machines with plate and split-ring tools, and electrofusion couplings, materials and processor.

3. Underground installation procedures shall be in accordance with the Plastic Pipe Institute's recommended procedures and ASTM D2774 and ASTM F1668.

4. Extrusion welds are not acceptable.

B. Heat Fusion of Pipe:

1. Weld in accordance with the Plastic Pipe Institute's recommended procedures and the manufacturer's recommendations for butt fusion methods. Provide experienced, qualified fusion operators.

2. Maintain a record/log of the conditions for fabrication of all welds assigning each weld an identification number, a location shown on the as-built drawings, and the temperature, pressure and fabrication conditions of each weld.

3. Butt fusion equipment for joining procedures shall be capable of meeting conditions

recommended by the pipe manufacturer including, but not limited to, facing temperature, temperature requirements, alignment, and fusion pressures.

4. For cleaning pipe ends, solutions such as detergents and solvents, when required, shall be used in accordance with manufacturer's recommendations. Solvents shall not be used unless approved by the Owner.

5. Do not bend pipe to greater degree than minimum radius recommended by manufacturer for type and grade.

6. Do not subject pipe to strains that will overstress or buckle piping or impose excessive stress on joints.

7. Before butt fusing pipe, inspect each length for presence of dirt, sand, mud, shavings, and other debris. Remove debris from pipe.

8. Cover open ends of fused pipe at end of each working day. Cap ends to prevent entry by animals, debris, or water.

9. Use compatible fusion techniques when polyethylenes of different melt indexes are fused together. Refer to manufacturer's specifications for compatible fusion.

10. Before electrofusion, clean and prepare the surface of the pipe to be joined and place pipe in support clamp.

11. Complete electrofusion in accordance with manufacture's recommended procedures.

C. Flange Jointing:

1. Use on flanged pipe connection sections.

2. Convoluted stainless steel backup rings and hardware shall be used for joining HDPE pipes.

3. Butt fuse fabricated flange adapters to pipe.

4. Observe following precautions in connection of flange joints:

   a. Use full-face gaskets only.

   b. Align flanges or flange/valve connections to provide tight seal. Viton gaskets are required for flange/valve connections.

   c. U.S. Standard round washers may be used on some flanges if in accordance with manufacturer's recommendations. Bolts shall be lubricated in accordance with manufacturer's recommendations.

   d. Torque flange bolts in sequence and accordance with manufacturer's recommendations. Do not over-torque bolts. Contractor shall use a torque wrench when tightening all fasteners.

5. Pull bolt down by degrees to uniform torque in accordance with manufacturer's recommendations.

D. Pipe Placement:

1. Grade control equipment shall be of the type to accurately maintain design grades and specified cover depths during installation of pipe as shown on the Drawings.

2. Unless otherwise specifically stated, install pipe in accordance with manufacturer's recommendations.

3. Maximum lengths of fused pipe to be handled as one section shall be placed according to manufacturer's recommendations as to pipe size, pipe SDR, and topography so as not to cause excessive gouging or surface abrasion; but not to exceed 200 feet or as directed by the ENGINEER.

4. Cap pipe sections longer than single joint (usually 40 feet) on both ends during placement except during fusing operations.

5. Remove dirt or debris from inside of pipe before backfilling.

6. Notify ENGINEER prior to installing pipe into trench and allow time for inspection. Correct irregularities found during inspection.

7. Complete tie-ins within trench whenever possible to prevent overstressed connections.

8. Allow pipe sufficient time to adjust to trench temperature prior to testing, fusion welding, segment tie-ins or backfilling activity.

9. To reduce branch saddle stress, install saddles at slope equal to and continuous with connecting piping.

10. Place in trench allowing at minimum 12 in./100 ft. for thermal contraction and expansion.

11. Pipe shall be insulated with a poly-coated foam insulation when top of pipe is less than 42-inches below ground surface.

12. Trench, backfill, and compact in accordance with Section 02200.

3.2 PIPE TESTING

A. General

1. The total test time, including initial pressurization, initial expansion, and time at test pressure shall not exceed eight hours. If the test is not completed in eight hours, the pressure in the test section shall be released and the section allowed to "relax" for at least eight hours before initiating another test.

2. Installed pipe shall be pressure tested in presence of ENGINEER. Provide minimum 7 days notice to ENGINEER before performing test.

3. Provide necessary piping connections between section of line being tested and nearest available source of water or air supply, together with test pressure equipment, meters, pressure gauge, and other equipment, materials, and facilities necessary to make specified tests.

4. The Contractor shall provide water for cleaning and testing the pipe, as well as disposal of the water after cleaning and testing.

5. Provide bulkheads, flanges, valves, bracing, blocking, or other temporary sectionalizing devices required.

B. Sections to be Tested

1. Test all HDPE pipe and fittings in 200 foot sections as they are installed.

2. Test all HDPE pipe and fittings from the extraction well to the transition to PVC pipe at the treatment building.

C. Preparation

1. Remove or isolate valves, flow meters, and instruments that may not withstand the required test pressure from within the test sections. Reconnect pipes with temporary fittings. Vent isolated equipment.

2. Flush pipe with clean water until pipe section to be tested is clean and free of dirt, sand, pipe shavings, or other foreign material.

3. Plug pipe outlets with test plugs, blind flanges or other devices suitable for the test pressure. Brace securely to prevent blowouts. Verify test pressure does not exceed any component of the pipe system.

4. Restrain or remove expansion joints.

5. Pressurizing equipment shall include regulator set to avoid over-pressurizing and damaging otherwise acceptable line.

D. Test Procedure

1. Perform test in accordance with OSHA requirements. Provide adequate safety equipment and implement appropriate procedures to avoid injury or damage.

2. Confirm specified test pressures do not exceed allowable pressures recommended by the manufacturers of test section components.

3. Allow sufficient time for pipe and test media temperatures to equilibrate with ambient temperature.

4. Add water or air slowly to test section. Purge all trapped air. Vent high spots as needed. Inspect connections, and retighten or otherwise correct any visible leaks.

5. The test consists of initial expansion and test periods.

6. Initial Expansion Period: Pressurize test section to pressure indicated in Paragraph 3.3 D. 9, this Section. Add makeup water as needed to maintain test pressure each hour over a three-hour period.

7. Test Period: After the initial expansion period is completed, reduce the test pressure to 10 psi less than indicated in Paragraph 3.3 D 9, this Section. Test period shall be one hour. Record pressure at end of period.

8. Acceptance:

    a. Piping shall be accepted as passing if the pressure drop over the three hour test period is less than 5% of the pressure at the beginning of the test period, or below amount recommended by the manufacturer, whichever is less.

    b. All visible leaks shall be repaired regardless of test results. Section shall be retested if correcting leaks requires disassembly.

9. Tes t Pressure:

    a. HDPE Carrier and Containment Pipe: 100 psig, hydrostatic test.

    b. In no case exceed maximum allowable pressure for any pipeline component, including valves, fittings, and instruments.

10. If pressure test is not accepted, correct leaks or defects in the pipe, and retest.

11. Remove temporary sectionalizing devices after tests are complete.

E. Test Report

1. Prepare and submit test report using the attached form for each piping system tested. Include following information in test report.

   a. Date of test.

   b. Description and identification of piping system tested.

   c. Type of test performed.

   d. Test fluid.

   e. Test pressure.

   f. Type and location of leaks detected.

   g. Corrective action taken to repair leaks.

   h. Results of retesting.

   i. Name of person performing test.

ATTACHMENT 1 TO SECTION 15070
PRESSURE TEST REPORT

PROJECT NAME: _____ **DATE:** _____

CONTRACTOR: _____ **TEST NO.:** _____

Description/Identification of Piping System Tested: _____

_____

Test Fluid: _____
Test Duration: **Start** _____
Finish _____
Test Pressure: _____
Type and Location of Leaks Detected: _____

_____

Corrective Actions Taken to Repair Leaks: _____

Pass/Failure: _____ **Retest Require (Y/N):** _____

Person Performing Test: (Print) _____ **Date:** _____

(Signature) _____

(Company) _____

Person Observing Test: (Print) _____ **Date:** _____

(Signature) _____

(Company) _____

SECTION 15075

MECHANICAL IDENTIFICATION

PART 1 GENERAL

1.1 SUMMARY

A. Description of work: Installation of self-adhesive pipe markers for identification of extracted groundwater conveyance piping and potable water piping.

B. Drawings and general provisions of the Contract, including General Conditions, Supplementary Conditions (if included), and Division 1 Specifications Sections, apply to this Section.

1.2 REFERENCES

A. ASME/ANSI Standard A13.1 2007.

1.3 PROJECT REQUIREMENTS

A. Use self-adhesive pipe markers meeting the requirements of ASME/ANSI Standard A13.1 2007

1.4 SAMPLES

A. Submit one sample of identification device.

PART 2 PRODUCTS

2.1 PIPE MARKERS

A. Manufacturers:
1. Seton Name Plate Co.
2. Or approved equal.

B. Plastic Nameplates:
1. Material: Self-adhesive vinyl.
2. Color: White background with black text.
3. Arrow: Include arrow indicating the direction of flow
4. Text: Arial font. Text size shall meet the minimum sizes as shown in the following table and provide an appropriate fit on marker space.

Outside Pipe Diameter (including insulation)	Minimum Length of Label Color Field	Minimum Letter Height
3/4" to 1-1/4" *	8"	1/2"
1-1/4" to 2"	8"	3/4"
2-1/2" to 6"	12"	1-1/4"
8" to 10"	24"	2-1/2"
Greater than 10"	32"	3-1/2"

*Note: Pipes too small to be directly labeled should be marked with a hanging tag.

PART 3 EXECUTION

3.1 PREPARATION

A. De-grease and clean surfaces to receive pipe marker.

3.2 INSTALLATION

A. Pipe markers shall be installed at a 50-foot maximum spacing on any non-buried straight runs of pipe. Any deviations to the pipe marker spacing must be approved by the ENGINEER.

B. Pipe markers shall be installed on both sides of wall penetrations, and adjacent to changes in directions.

C. Install pipe markers on insulation jacketing where present.

D. Final pipe marker locations must be approved by the ENGINEER.

3.3 SCHEDULES

EQUIPMENT TYPE	IDENTIFICATION	BACKGROUND COLOR	LETTERING COLOR
Interior Conveyance Piping	PROCESS WATER	White	Black
Potable Water Piping	POTABLE WATER	Green	White
Process Piping, Potable Water Piping, Condensate Piping, Refrigerant Piping	→ (Arrow indicating direction of flow)	Match colors above	Match colors above

END OF SECTION

SECTION 15080

MECHANICAL PROCESS PIPING INSULATION

PART 1 GENERAL

1.1 DESCRIPTION OF WORK

A. For the insulation of all 6" and 8" conveyance piping in well vaults and outdoor 18" blower discharge piping.

1.2 RELATED DOCUMENTS

A. Drawings and general provisions of the Contract, including General Conditions, Supplementary Conditions (if included), and Division 1 Specifications Sections, apply to this Section.

B. Section 15060 - Process Piping Hangers and Supports.

1.3 REFERENCES

A. ASTM C518 - Steady-State Thermal Transmission Properties by Means of the Heat Flow Meter Apparatus.

B. ASTM C612 - Mineral Fiber Block and Board Thermal Insulation.

C. ASTM C665 – Standard Specification for Mineral-Fiber Blanket Thermal Insulation for Light Frame Construction and Manufactured Housing.

D. ASTM C1338 – Standard Test Method for Determining Fungi Resistance of Insulation Materials and Facings.

E. ASTM E84 - Surface Burning Characteristics of Building Materials.

F. ASTM E96 - Water Vapor Transmission of Materials.

1.4 SECTION INCLUDES

A. Pipe insulation.

1.5 QUALITY ASSURANCE

A. Materials: Flame-spread, smoke-developed rating of 25/50 in accordance with ASTM E84.

B. Corrosion, Fungi and Bacteria Resistance: Insulation shall not breed or promote growth or corrode metal in accordance with ASTM C1338 and C665, respectively.

PART 2 PRODUCTS

2.1 MANUFACTURERS

A. ITW Insulation Systems.

B. Johns Manville.

C. Knauf Fiber Glass GmbH.

D. Owens Corning.

E. Or approved equal.

2.2 POLYISOCYNAURATE INSULATION, RIGID

A. General: Polyisocynaurate insulation shall be used on outdoor blower discharge conveyance piping.

B. Insulation: ASTM C612; rigid, non-combustible blanket.
   1. K-Value: ASTM C518, 0.19 Btu-in/hr-ft2-F, Aged 180 days at 75 degrees F.
   2. Maximum Service Temperature: 300 degrees F.
   3. Maximum Moisture Absorption: ≤1.0 percent by volume.
   4. Density: 2.0 pounds per cubic foot rigid insulation.
   5. Model: ITW Trymer 2000 XP Polyisocynaurate (PIR) Foam Insulation, or approved equal.

C. Factory Applied Vapor Barrier Jacket:
   1. Saran 540 CX Vapor Retarder Film factory applied to Trymer Insulation.
   2. Average Thickness: 4.0 mils.
   3. Permanence Rating: ASTM E96; 0.02 perms.
   4. Secure with pressure sensitive tape.

D. Vapor Barrier Tape:
   1. Saran 520 CX Tape, flexible polyvinylidene chloride coated with an acrylic adhesive.
   2. Average Thickness: 2.0 mils.
   3. Permanence Rating: ASTM E96; 0.03 perms.

E. Aluminum Jacket:
   1. Aluminum jacketing with 3 mil thick Polysurlyn factory applied moisture retarder. Jacketing shall be smooth finish and of minimum 0.016" thickness.
   2. Model: ITW Aluminum Jacket, SE C&R 0.016" with HEM or approved equal.

F. Moisture Retarder:
   1. Moisture Retarder shall be a 3 mil thick Polysurlyn moisture retarder heat laminated to the interior surface of the metal jacketing.

2.3 FIBERGLASS INSULATION

A. General: Fiberglass insulation shall be used on 6" and 8" conveyance piping in well vaults.

B. Insulation:
   1. K-Value: ASTM C547, 0.25 at 75 degrees F.
   2. Manufacturer: Owens Corning, or approved equal.

C. Jacketing: Jacketing shall be ASJ, self-sealing lap and butt strips. Jacket shall be 0.016-inch aluminum conforming to ASTM B209. Jacket shall provide weatherproof protection for the insulation.

2.4 INSULATION THICKNESS

A. Outdoor blower discharge conveyance piping: 1.5-inch, unless otherwise noted.

B. Conveyance piping in well vaults: 2-inch.

PART 3 EXECUTION

3.1 EXAMINATION

A. Verify that piping has been tested before applying insulation materials.

B. Verify that surfaces are clean, foreign material removed, and dry.

3.2 INSTALLATION

A. Install materials in accordance with manufacturer's instructions.

B. Install insulation on all conveyance piping in well vaults and outdoor blower discharge piping where shown on the DRAWINGS.
   1. Continue insulation through walls, sleeves, hangers, and other penetrations.
   2. Insulate entire piping system including fittings, joints, flanges, flexible connections, and expansion joints.
   3. Finish with aluminum jacket.

3.3 TOLERANCE

A. Substituted insulation materials shall provide thermal resistance within 10 percent at normal conditions, as materials indicated.

3.4 RIGID FIBER POLYISOCYNAURATE INSULATION SCHEDULE

A. Blower discharge conveyance line.

END OF SECTION

THIS PAGE INTENTIONALLY LEFT BLANK

SECTION 15110

MECHANICAL PROCESS VALVES

PART 1 GENERAL

1.1 DESCRIPTION OF WORK

A. Description of system:
   1. Furnish and provide all supervision, labor, materials, tools, equipment, and perform all operations as specified herein or as indicated on the Drawings for the complete installation, start-up, and testing of the equipment.

1.2 RELATED WORK

A. Other sections of the specifications, not referenced below, shall also apply to the extent required for proper performance of this work.

B. Section 01300 - Submittals.

C. Section 01600 - Product Requirements.

D. Section 13403 - Instrumentation and Control System Start-up and Field Testing.

E. Section 13404 - Instrumentation and Control System Training - Appendix A Calibration Sheet.

F. Section 13420 - Instrumentation and Control System Primary Sensors and Field Instruments - Appendix B Pre-installation Checklist.

G. Section 15050 - Basic Material and Methods.

H. Section 15075 - Mechanical Identification.

I. Section 15200 - Process Pipe.

1.3 REFERENCES

A. ASME B1.20.1 - National Pipe Thread Taper.

B. ASME B16 - Piping and Fittings.

C. ASME B31.1 - Power Piping.

D. ASME B31.9 - Building Services Piping.

E. ASTM A126 - Gray Iron Castings for Valves, Flanges, and Pipe Fittings.

F. ASTM B62 - Composition Bronze or Ounce Metal Castings.

G. ASTM B584 - Copper Alloy Sand Castings for General Applications.

H. MSS SP-67 - Butterfly valves.

I. MSS SP-70 - Cast iron gate valves, flanged and threaded ends.

J. MSS SP-71 - Cast iron swing check valves, flanged and threaded ends.

K. MSS SP-78 - Cast iron plug valves.

L. MSS SP-80 - Bronze Gate, globe angle and check valves.

M. MSS SP-85 - Cast Iron Globe & Angle Valves, Flanged and Threaded Ends.

N. MSS SP-110 - Ball Valves Threaded, Socket-Welding, Solder Joint, Grooved and Flared Ends.

1.4 QUALITY ASSURANCE

A. Qualifications of manufacturer: Products used in the Work of this section shall be produced by manufacturers regularly engaged in the manufacture of similar items and with a history of successful production acceptable to ENGINEER.

B. Qualifications of installers: Use adequate numbers of skilled workmen who are thoroughly trained and experienced in the necessary crafts and who are completely familiar with the specified requirements and the methods needed for proper performance of the Work of this Section.

C. Basis of acceptance: The manufacturer's recommended installation procedures, when approved by ENGINEER, will become the basis for inspecting and accepting or rejecting actual installation procedures used on this Work.

D. Single-Source Responsibility: Comply with Section 01600 - Product Requirements regarding substitutions.

E. Comply with ASME B31.9 for building services piping and ASME B31.1 for power piping.

F. Comply with various MSS Standard Practice documents referenced.

1.5 SUBMITTALS

A. General: Comply with Section 01300.

B. Product Data for each valve type. Include body material, valve design, pressure and temperature classification, end connection details, seating materials, trim material and arrangement, dimensions and required clearances, and installation instructions. Include list indicating valve and its application. Provide manufacturer's name, catalog number, and catalog cut for each item where applicable.

C. Manufacturer's recommendations: Accompanying the materials list, submit copies of the manufacturer's current recommended method of installation for materials provided.

D. Closeout Submittals: Submit following in accordance with Section 01700.
   1. Maintenance data for valves. Include detailed manufacturer's instructions on adjusting, servicing, disassembling, and repairing.

E. Submit warranties as specified in Section 01600 Product Requirements.

F. Submit Operation and Maintenance Manual(s).

1.6 DELIVERY, STORAGE AND HANDLING

A. Protection: Use all means necessary to protect the materials of this section before, during and after installation and to protect the installed work and materials of all other trades.

B. General: Comply with Section 01600. Prepare valves for shipping as follows:
1. Protect internal parts against rust and corrosion.
2. Protect threads, flange faces, grooves, and weld ends.
3. Set globe and gate valves closed to prevent rattling.
4. Set ball and plug valves open to minimize exposure of functional surfaces.
5. Set butterfly valves closed or slightly open.
6. Block check valves in either closed or open position.

C. Use following precautions during storage:
1. Maintain valve end protection.
2. Store indoors and maintain valve temperature higher than ambient dew-point temperature. If outdoor storage is necessary, store valves off ground in watertight enclosures.

D. Use sling to handle large valves. Rig to avoid damage to exposed parts. Do not use handwheels and stems as lifting or rigging points.

E. Replacements: In the event of damage, immediately make all repairs and replacements necessary to the approval of ENGINEER and at no additional cost to ENGINEER.

1.7 MAINTENANCE

A. Submittal shall include the name, phone number, and address of the nearest local supplier for spare parts meeting the requirements of this specification.

B. Printed instructions relating to the proper maintenance that includes lubrication information, parts lists indicating parts by name and part number, and exploded view diagrams where necessary, shall be furnished in triplicate. Additionally, provide three (3) CDs with copies of all information in electronic form.

1.8 VALVE IDENTIFICATION

A. The valve identification list for this project is included in the Valve Schedule.

PART 2 PRODUCTS

2.1 GENERAL

A. Proprietary products. References to specified proprietary products are used to establish minimum standards of utility and quality. Unless otherwise approved by ENGINEER, provide only the specific products. Design is based on the materials specified. Other materials may be considered by the ENGINEER.

B. Preferred vendors for the work are specified for each valve below.

2.2 DESIGN CRITERIA

A. 6-inch polyvinyl chloride (PVC) butterfly valve:
   1. Manufacturer: Asahi-America or approved equal.
      a. Size: 6".
      b. Type: Type-57 Wafer-Style.
      c. Model: 3725060.
      d. Body material: PVC.
      e. Disc: PVC.
      f. Seat: Viton seat and seal.
      g. Description: 316 stainless steel shaft, manual lever operator, locking handle.
      h. Connections: 6" flanged.

B. 6-inch PVC butterfly valve with motorized flow control valve:
   1. Manufacturer: Asahi-America or approved equal.
      a. Size: 6".
      b. Type: Type-57, Wafer Style.
      b. Model: 3725080.
      c. Body material: PVC.
      d. Disc: PVC.
      e. Seat: Viton seat and seal.
      f. Actuator: Series 10.
      g. Control Contacts: transmitter (4-20 mA).
      h. Specification: 115 VAC, 1 Phase, electric actuator, NEMA 4X, 2 limit switches.
      i. Position: Normally open.

C. 6-inch PVC butterfly valve with motorized flow control valve:
   1. Manufacturer: Asahi-America or approved equal.
      a. Size: 6".
      b. Type: Type-57, Wafer Style.
      b. Model: 3725080.
      j. Body material: PVC.
      k. Disc: PVC.
      l. Seat: Viton seat and seal.
      m. Actuator: Series 10.
      n. Control Contacts: transmitter (4-20 mA).
      o. Specification: 115 VAC, 1 Phase, electric actuator, NEMA 4X, 2 limit switches.
      p. Position: Normally closed.

D. 8-inch PVC butterfly valve:
   1. Manufacturer: Asahi-America or approved equal.
      a. Size: 8".
      b. Type: Type-57 Wafer-Style.
      c. Model: 3725080.
      d. Body material: PVC.
      e. Disc: PVC.
      f. Seat: Viton seat and seal.
      g. Description: 316 stainless steel shaft, manual lever operator, locking handle.
      h. Connections: 8" flanged.

E. 8-inch PVC butterfly valve with motorized flow control valve:
   1. Manufacturer: Asahi-America or approved equal.
      a. Size: 8".
      b. Type: Type-57, Wafer-Spherical, single flange.
      c. Model: 3725080.
      d. Body material: PVC.

e. Disc: PVC.
f. Seat: FKM seat and seal.
g. Actuator: Series 10.
h. Control Contacts: transmitter (4-20 mA).
i. Specification: 115 VAC, 1 Phase, electric actuator, 100% Duty cycle, NEMA 4X, 2 limit switches.
j. Position: Normally open.

F. 8-inch PVC butterfly valve with motorized flow control valve:
1. Manufacturer: Asahi-America or approved equal.
a. Size: 8".
b. Type: Swing check valve, flanged.
c. Model: 3725080.
d. Body material: PVC.
e. Disc: PVC.
f. Seat: Viton seat and seal.
g. Actuator: Series 10.
h. Control Contacts: positioner (0-10V DC); transmitter (4-20 mA).
i. Specification: 115 VAC, 1 Phase, electric actuator, 100% Duty cycle, NEMA 4X, 2 limit switches.
j. Position: Normally open.

G. 12-inch carbon steel butterfly valve:
1. Manufacturer: Nibco or approved equal.
a. Size: 12".
b. Type: High Performance Butterfly Valve.
c. Model: LCS-6822-5-12.
d. Body material: Carbon Steel.
e. Disc: Stainless Steel.
f. Seat: PTFE seat.
g. Description: stainless steel shaft, manual gear operator.
h. Connections: 12" flanged lugs.

H. 12-inch carbon steel butterfly valve:
1. Manufacturer: Nibco or approved equal.
a. Size: 18".
b. Type: High Performance Butterfly Valve.
c. Model: LCS-6822-5-18.
d. Body material: Carbon Steel.
e. Disc: Stainless Steel.
f. Seat: PTFE seat.
g. Description: stainless steel shaft, manual gear operator.
h. Connections: 18" flanged lugs.

I. 6-inch PVC check valve:
1. Manufacturer: Hayward or approved equal.
a. Size: 6".
b. Type: SW Series Swing Check Valve.
c. Model: SW1600V.
d. Body material: PVC.
e. Disc: PVC.
f. Seal: FPM.
g. Description: Swing check, PVC shaft, PVC clapper.
h. Connections: 6" flanged.

J. 6-inch ductile iron check valve:
   1. Manufacturer: Kennedy or approved equal.
      a. Size: 6".
      b. Type: Type 1106 Swing Check Valve, ANSI flange 125#.
      c. Model: L1106LW 6".
      d. Body material: Ductile Iron.
      e. Disc: Bronze.
      f. Seal: Nitrile (Buna N).
      g. Description: Lever-weighted swing check, bronze shaft.
      h. Connections: 6" flanged.

K. 6-inch stainless steel knife gate valve:
   1. Manufacturer: Ferguson or approved equal.
      a. Size: 6".
      b. Type: Stainless Steel Gate Valve.
      c. Model: FNW451AU.
      c. Body material: Stainless steel.
      d. Disc: Stainless steel.
      e. Connections: 6" flanged.

L. 6-inch stainless steel gate valve with motorized flow control valve (fail closed):
   1. Manufacturer: Ferguson or approved equal.
      a. Size: 6".
      b. Type: Stainless Steel Gate Valve.
      c. Model: FNW451AU.
      f. Body material: Stainless steel.
      g. Disc: Stainless steel.
      h. Connections: 6" flanged.

M. 1-1/2-inch stainless steel ball valve:
   1. Manufacturer: Apollo or approved equal.
      a. Type: Full Port.
      b. Model: 76-107-01.
      c. Size: 1-1/2".
      d. Material: 316 stainless ball and stem. Hardware including lever handle, nuts, and bolts shall match body material.
      e. Connections: 1-1/2" FNPT.

N. 1-inch PVC ball valve:
   1. Manufacturer: Hayward or approved equal.
      a. Type: Full Port, True Union
      b. Model: TB1100F.
      c. Size: 1".
      d. Material: PVC ball and stem, true union.
      e. Connections: 1" PVC socket.

1.2 ELECTRIC ACTUATORS

A. All electric actuators shall conform to the requirements of AWWA Standard C540-93.

B. Actuators shall contain motor, gearing, manual over-ride, limit switches, torque switches, drive coupling, integral motor controls (where required), position feedback transmitter (where required) and mechanical dial position indicator (where required).

C. The motor shall be specifically designed for actuator service. The motor will be of the induction type with Class F insulation and protected by means of thermal switches imbedded in the motor windings. Motor enclosure will be totally enclosed, non-ventilated.

D. Actuator enclosure shall be NEMA 4 (watertight). All external fasteners on the electric actuator will be stainless steel. Fasteners on limit switch and terminal compartments shall be captured to prevent loss while covers are removed.

E. All gearing shall be grease lubricated and designed to withstand the full stall torque of the motor.

F. Manual over-ride shall be by hand operator. Return from manual to electric mode of operation will be automatic upon motor operation. A seized or inoperable motor shall not prevent manual operation.

G. Limit switches shall be furnished at each end of travel. Limit switch adjustment shall not be altered by manual operation. Limit switch drive shall be by counter gear. Limit switches must b e capable of quick adjustment requiring no more than five turns of the limit switch adjustment spindle. One set of normally open and one set of normally closed contacts will be furnished at each end of travel where indicated. Contacts shall be of silver and capable of reliably switching low voltage DC source from the control system.

H. Mechanically operated torque switches shall be furnished at each end of travel. Torque switches will trip when the valve load exceeds the torque switch setting. The torque switch adjustment device must be calibrated directly in engineering units of torque.

I. All wiring shall be terminated at a plug and socket connector.

J. Quarter turn actuators will be furnished with mechanical stops that restrict the valve/actuator travel.

K. Valve closing time will be 60 seconds unless otherwise noted by the ENGINEER.

L. Actuators will be capable of operating in an ambient temperature range of -20 to +175 °F (without motor controls) and -20 to +160 °F (with motor controls).

M. Manufacturer: Asahi-America or approved equal.

a. For 6-inch butterfly valve:

1) Model:	Series 10, Model 2109060, Transmitter Model 2130813
Control Contacts:	Open and closed (115 AC) command; transmitter (4-20 mA)
2) Specification:	115 VAC, 1 Ph., 5220 in-lbs torque, electric actuator, NEMA 4x, 2 limit switches

b. For 8-inch butterfly valve:

1) Model:	Series 10, Model 2109060, Transmitter Model 2130813, Positioner Model 2129005
Control Contacts:	Open and closed (115 AC) command; positioner (0-10 DC); transmitter (4-20 mA)
2) Specification:	115 VAC, 1 Ph., 6960 in-lbs torque, electric actuator, NEMA 4x, 2 limit switches

c. For 2-inch ball valve:

1) Model:	Valcon ADC Series, ADC300IL3S2N115ACControl
2) Control Contacts:	Open and closed (120 AC) command; open and closed status (120 AC)
3) Specification:	115 VAC, 1 Ph., 300 in-lbs torque, electric actuator, 100% Duty cycle, NEMA 4x, battery back-up, 2 limit switches

N. All other materials not specifically described but required for a complete and proper installation of the work of this section, shall be new, first quality of their respective kind, and as selected by CONTRACTOR subject to the approval of ENGINEER. Any additional costs incurred in changing system layout, piping, materials or equipment due to use of substitute "or equal"

product shall be sole responsibility of CONTRACTOR with no additional cost to Owner or Engineer.

PART 3 EXECUTION

3.1 INSTALLATION

A. General. Install the Work of this Section in strict accordance with the manufacturer's recommendations as approved by ENGINEER.

B. The work of this section shall be installed plumb and perpendicular to piping where required on the Drawings.

C. Painting. Marred or abraded surfaces shall be cleaned and refinished in accordance with the manufacturer's recommendations.

3.2 TESTS

A. Upon completion of this portion of the Work, and prior to its acceptance by the ENGINEER, make all required tests and adjustments for free and smooth operation. Follow all manufacturers' recommendations for start-up, testing, and adjustments as outlined in the service manual check-list and as recommended by the manufacturer's technical service representative.

3.3 INSTRUCTIONS

A. When all required approvals of this portion of the Work have been obtained, and at a time designated by ENGINEER, thoroughly demonstrate to ENGINEER's operation and maintenance personnel the operation and maintenance of all items installed under the Work of this Section.

3.4 CLEANING

A. Clean exposed surface of all grease, dirt and other foreign materials.

B. Touch up all marred or abraded surfaces as specified herein.

END OF SECTION

Valve Schedule

Tag Number	Valve Type	Size	Service	Location
CV-101	Check	6″	RW-20 Well	RW-20 Vault
AV-101	Gate	6″	RW-20 Well	RW-20 Vault
MV-101	Gate	6″	RW-20 Well	RW-20 Vault
CV-201	Check	6″	RW-21 Well	RW-21 Vault
AV-201	Gate	6″	RW-21 Well	RW-21 Vault
MV-201	Gate	6″	RW-21 Well	RW-21 Vault
CV-301	Check	6″	RW-22 Well	RW-22 Vault
AV-301	Gate	6″	RW-22 Well	RW-22 Vault
MV-301	Gate	6″	RW-22 Well	RW-22 Vault
CV-102	Check	6″	RW-20 Pipeline	Treatment Building
MV-102	Butterfly	6″	RW-20 Pipeline	Treatment Building
AV-202	Butterfly	8″	RW-21 Bypass	Treatment Building
CV-202	Check	6″	RW-21 Pipeline	Treatment Building
MV-202	Butterfly	8″	RW-21 Pipeline	Treatment Building
CV-102	Check	6″	RW-22 Pipeline	Treatment Building
MV-302	Butterfly	6″	RW-21 Pipeline	Treatment Building
CV-202	Check	6″	RW-20 Pipeline	Treatment Building
CV-103	Check	6″	RW-20 Bypass	Treatment Building
MV-103	Butterfly	6″	RW-20 Pipeline	Treatment Building
CV-203	Check	6″	RW-21 Bypass	Treatment Building
MV-203	Butterfly	8″	RW-21 Pipeline	Treatment Building
CV-303	Check	6″	RW-22 Bypass	Treatment Building
MV-303	Butterfly	6″	RW-21 Pipeline	Treatment Building
MV-104	Butterfly	6″	RW-20 Bypass	Treatment Building
MV-304	Butterfly	6″	RW-22 Bypass	Treatment Building
MV-401	Butterfly	12″	Blower 1 Damper	Treatment Building
MV-410	Butterfly	12″	Blower 2 Damper	Treatment Building
CV-501	Check	6”	Air Stripper 1 Discharge	Treatment Building
MV-501	Butterfly	6”	Air Stripper 1 Sump	Treatment Building
CV-510	Check	6”	Air Stripper 2 Discharge	Treatment Building
MV-510	Butterfly	6”	Air Stripper 2 Sump	Treatment Building
MV-502	Butterfly	6”	Air Stripper 1 Discharge	Treatment Building
MV-511	Butterfly	6”	Air Stripper 2 Discharge	Treatment Building
MV-701	Butterfly	18”	ECU Control	ECU System
MV-702	Butterfly	18”	ECU Control	ECU System
MV-703	Butterfly	18”	ECU Control	ECU System
MV-704	Butterfly	18”	ECU Control	ECU System
MV-704	Butterfly	18”	ECU Control	ECU System

THIS PAGE INTENTIONALLY LEFT BLANK

SECTION 15200

PROCESS PIPE

PART 1 GENERAL

1.1 DESCRIPTION

A. Furnish and install all process piping, potable water piping, and miscellaneous appurtenances as indicated on the Drawings and specified herein.

B. General
   1. Drawings show general arrangement, direction, and size of pipes and are not intended to show every offset, valve, and fitting, or every structural difficulty that may be encountered. Install the piping and appurtenances to suit. Verify all measurements at the Site.
   2. Provide all piping with all necessary insulation, supports, guides, and expansion joints as shown on the Drawings or specified herein.
   3. Provide protection on all exposed flange faces and machine surfaces to prevent in-transit damage.
   4. Provide covers on all valve connections to keep dirt out.

1.2 RELATED WORK

A. Other sections of the specifications, not referenced below, shall also apply to the extent required for proper performance of this work.

B. Section 01300 - Submittals.

C. Section 01600 - Product Requirements.

D. Section 09900 - Painting.

E. Section 15050 - Basic Material and Methods.

F. Section 15060 - Process Piping Hangers and Supports.

G. Section 15070 – HDPE Piping.

H. Section 15075 - Mechanical Identification.

I. Section 15080 - Mechanical Process Piping Insulation.

1.3 QUALITY ASSURANCE

A. Qualifications of manufacturer: Products used in the Work of this Section shall be produced by manufacturers regularly engaged in the manufacture of similar items and with a history of successful production acceptable to ENGINEER.

B. Qualifications of installers: Use adequate numbers of skilled workmen who are thoroughly trained and experienced in the necessary crafts and who are completely familiar with the specified requirements and the methods needed for proper performance of the Work of this section.

C. Basis of acceptance: The manufacturer's recommended installation procedures, when approved by ENGINEER, will become the basis for inspecting and accepting or rejecting actual installation procedures used for this work.

1.4 REFERENCE STANDARDS

A. ASTM D1785 – Standard for Polyvinyl Chloride (PVC) Plastic Pipe.

B. ASTM D2467 – Standard for PVC Plastic Pipe Fittings, Schedule 80.

C. ASTM F402 - Standard Practice for Safe Handling of Solvent Cement and Primer Used for Joining Thermoplastic Pipe and Fittings.

D. AWWA C906 – Standard for PE Pressure Pipe and Fittings.

E. AWWA C907 – Standard for PVC Pressure Fittings.

F. ASTM A312/A312M – Standard for Stainless Steel Pipe.

G. ASTM A403/403M – Standard for Stainless Steel Pipe Fittings.

H. AWS A5.9/5.9M – Specification for Bare Stainless Steel Welding Electrodes and Rods.

I. Manufacturer's Standardization Society of the Valve and Fittings Industry (MSS) Standard Practice SP-58 - Hangers and Supports.

J. MSS Standard Practice SP-69 - Selection of Hangers and Supports.

K. Nayyar Mohinder L., P.E.: Piping Handbook, Sixth Edition, (New York: McGraw-Hill; 1992).

L. AWS D1.1 - Structural Welding Code

M. ASTM C-585 Recommended Practice for Inner and Outer Diameters of Fiberglass Insulation for Nominal Sizes of Pipe and Tubing (NPS System).

N. ASTM C-585 Standard Specification for Micro-lock Fiberglass Insulation.

O. The Mechanical Code of New York State

1.5 SUBMITTALS

A. The following shall be submitted:
   1. Descriptive literature from the manufacturers detailing:
      a. All pipe and fittings
      b. All pipe hangers and supports
   2. HDPE pipe manufacturer's installation and welding instructions.
   3. Gasket and pipe manufacturer's joint assembly instructions.
   4. Product warranties as specified in Section 15050 - Basic Materials and Methods.

B. Shop Drawings
   1. Submit complete sets of shop drawings of all items to be furnished under Section 15200, including complete layouts, schedules, location plans, and complete total bill of materials for all piping in accordance with this section and Section 01300.
   2. Submittals shall include a representative catalog cut for each different type of pipe and complete piping drawings indicating location of piping.
   3. Submit complete design data for all systems under Section 15200 to show conformance with Section 15200.

C. Quality Control Submittals
   1. Submit maintenance information on all items in Section 15200.

1.6 DELIVERY, STORAGE, AND PRODUCT HANDLING

A. Shipping:
   1. Ship piping and appurtenances complete, except where disassembly is required by transportation regulations or for protection of components.
   2. Pack spare parts in containers bearing labels clearly designating contents and pieces of equipment for which is intended.

B. Replacements: In the event of damage, immediately make all repairs and replacements necessary to the approval of ENGINEER and at no additional cost to ENGINEER.

C. Storage:
   1. In accordance with Section 01600 - Product Requirements

PART 2 PRODUCTS

2.1 GENERAL

A. Proprietary products: References to specified proprietary products are used to establish minimum standards of utility and quality. Unless otherwise approved by ENGINEER, provide only the specific products. Design is based on the materials specified.

B. Extracted groundwater process pipe shall be Schedule 40 stainless steel pipe in the remedial well vaults, as shown on the Drawings, HDPE Standard Dimension Ratio (SDR) 17 in the remedial wells vaults, subgrade, and in the treatment system, as shown on the Drawings, and Schedule 80 PVC in the treatment system.

C. Air process pipe shall be All condensate conveyance pipe shall be Schedule 40 galvanized carbon steel pipe.

2.2 STAINLESS STEEL EXTRACTED GROUNDWATER PROCESS PIPE

A. Provide Schedule 40 stainless steel piping meeting ASTM A312 as required.

B. Fittings: All pipe fittings shall be stainless steel to match piping.

C. Connections: At pipe joints and fittings, connections shall be PVC couplings.

D. Connections to Valves: Connections shall be flange to flange.

E. Flanged Connections: Flanges shall be ANSI class 150 flanges unless otherwise noted.

F. Flange Gaskets: Gaskets for flat faced flanged applications shall use full face gaskets, 1/8 inch thick, only. Gaskets for raised face flanged applications shall use flat ring or full face gaskets, 1/8 inch thick, only. Oversize bolt holes to prevent crimping of gasket when installed. Gasket material shall be grade "O" with Fluoroelastomer.

2.3 HDPE EXTRACTED GROUNDWATER PROCESS PIPE

A. Provide SDR-17 HDPE piping in accordance with the Drawings and requirements as described in specification 15070 – HDPE Piping.

B. Fittings: All pipe fittings shall be molded SDR-17 HDPE fittings in accordance with the Drawings and requirements as described in specification 15070 – HDPE Piping.

C. Connections: At pipe joints and fittings, all connections shall be butt welded using heat fusion in accordance with the Drawings and requirements as described in specification 15070 – HDPE Piping.

D. Flanged Connections: Flanges shall be ANSI class 150 flanges unless otherwise noted in accordance with the Drawings and requirements as described in specification 15070 – HDPE Piping.

E. Flange Gaskets: Gaskets for flat faced flanged applications shall be in accordance with the Drawings and requirements as described in specification 15070 – HDPE Piping.

2.4 PVC EXTRACTED GROUNDWATER PROCESS PIPE

A. Provide Schedule 80 PVC piping meeting ASTM D1785 as required.

B. Fittings: All pipe fittings shall be Schedule 80 PVC to match piping.

C. Connections: At pipe joints and fittings, connections shall be Schedule 80 PVC socket-type couplings or socket-type van stone flanges as shown on the Drawings, to match piping.

D. Flanged Connections: Flanges shall be ANSI class 150 flanges unless otherwise noted.

E. Flange Gaskets: Gaskets for flat faced flanged applications shall use full face gaskets, 1/8 inch thick, only. Gaskets for raised face flanged applications shall use flat ring or full face gaskets, 1/8 inch thick, only. Oversize bolt holes to prevent crimping of gasket when installed. Gasket material shall be grade "O" with Fluoroelastomer.

2.5 PIPING INSULATION

A. Provide insulation on all vault piping where shown on the Drawings and specified in Section 15080 – Mechanical Insulation.

2.6 OTHER MATERIALS

A. All other materials, not specifically described but required for a complete and proper installation of the work of this section, shall be new, first quality of their respective kind, and as selected by CONTRACTOR subject to the approval of ENGINEER.

PART 3 EXECUTION

3.1 EXISTING CONDITIONS

A. Inspection:
   1. Prior to all Work of this section, carefully inspect the installed Work of all other trades and verify that all such Work is complete to the point where this installation may properly commence.
   2. Verify that the Work of this section may be installed in accordance with all pertinent codes and regulations, the original design, and the referenced standards.

B. Discrepancies:
   1. In the event of discrepancy, immediately notify ENGINEER.
   2. Do not proceed with installation in areas of discrepancy until all such discrepancies have been fully resolved.

3.2 INSTALLATION

A. General: Install the Work of this section in strict accordance with the manufacturer's recommendations as approved by ENGINEER.

B. The Work of this section shall be installed plumb and perpendicular to piping where required on Construction Drawings.

C. Painting: Marred or abraded surfaces shall be cleaned and refinished in accordance with the manufacturer's recommendations.

D. Route piping as shown on the Drawings.

E. Cut pipe to exact measurement and install without forcing or springing.

F. Install piing to allow for expansion and contraction without stressing pipe, joints, or connected equipment.

G. Provide pipe sleeves and pipe supports in accordance with Section 15200 and 15060 respectively.

H. Provide wall restoration around pipe penetration in accordance with Section 07620.

I. Rigidly anchor pipe to stable structures where necessary. Provide pipe guides so that movement takes place along the axis of pipe only.

3.3 TESTS

A. Upon completion of this portion of the Work, and prior to its acceptance by ENGINEER, make all required tests and adjustments for free and smooth operation.

B. Testing of the HDPE piping shall be performed in accordance with Section 15070.

3.4 FIELD QUALITY CONTROL

A. All installed piping shall be subjected to a pressure test. Testing shall be the responsibility of Subcontractor and shall be witnessed by Engineer. Engineer shall be notified at least seven days in advance of the tests. The final test report shall be delivered to Engineer within 30 days

of completion of testing. Deviations from the following requirements shall be approved by Engineer prior to conducting test.

1. Hydrostatic Testing of Conveyance Piping:
   a. Test for leaks and defects in new piping. If testing is performed in segments, submit separate report for each test, complete with diagram of portion of piping tested.
   b. Cap and subject piping to static water pressure of 100 psi (150% of the operating pressure). Isolate test source and allow to stand for 4 hours. Leaks and loss in test pressure constitute defects that must be repaired.
   c. Repair leaks and defects with new materials and retest piping or portion thereof until satisfactory results are obtained.
   d. Prepare reports for tests and required corrective action.

B. If tests indicate Work does not meet specified requirements, remove Work, replace and retest at no additional cost to ENGINEER.

3.5 INSTRUCTIONS

A. When all required approvals of this portion of the Work have been obtained, and at a time designated by ENGINEER, thoroughly demonstrate to ENGINEER'S operation and maintenance personnel the operation and maintenance of all items installed under the Work of this section.

3.6 CLEANING

A. Clean exposed surface of all grease, dirt and other foreign materials.

B. Touch up all marred or abraded surfaces as specified herein.

END OF SECTION

SECTION 15950

TESTING, ADJUSTING, AND BALANCING

PART 1 GENERAL

1.1 RELATED DOCUMENTS

A. Drawings and general provisions of the Contract, including General Conditions, Supplementary Conditions (if included), and Division 1 Specifications Sections, apply to this Section.

1.2 SECTION INCLUDES

A. Performance, Leak, and Pressure Testing, of:
   1. System equipment including, but not limited to; blowers, pumps, and carbon vessels.

B. Measurement of final operating condition of HVAC systems.

C. Sound measurement of equipment operating conditions near blowers.

D. Vibration measurement of equipment operating conditions at blowers and pumps.

1.3 SUBMITTALS

A. Field Reports: Indicate deficiencies in systems that would prevent proper testing of systems and equipment to achieve specified performance. Submit to ENGINEER at the end of each day at Site.

B. Submit draft copies of field reports for review prior to final acceptance of Project. Provide final copies for ENGINEER and for inclusion in operating and maintenance manuals.

C. Provide three copies of the final field report in letter size, three-ring binder manuals, complete with index page and indexing tabs, with cover identification at front and side. Include set of reduced Drawings with equipment identified to correspond with data sheets.
   1. Include diagrams of systems and equipment with pressure drops at each location.
   2. Include both initial and final pressure drops and flows.
   3. Completeness and accuracy of reports shall be certified by a principle of the balancing agency, who is not affiliated with any firm involved in the construction Project.
   4. Submit data sheets on each item of testing equipment utilized. Include name of device, manufacturer's name, model number, latest date of calibration, and correction factors.

1.4 QUALIFICATIONS

A. Engage the services of an independent agency specializing in the testing, adjusting, and balancing of systems specified in this Section. The agency shall be acceptable to OWNER and ENGINEER.

B. Perform Work under supervision of one of the following:
   1. AABC Certified Test and Balance Engineer.
   2. NEBB Certified Testing, Balancing and Adjusting Supervisor.
   3. Registered Professional Engineer experienced in performance of this Work and licensed at the place where the Project is located.

1.5 SCHEDULING

A. Perform testing, adjusting and balancing after the equipment is completely installed and ready for continuous operation as required.

B. Sequence Work to commence after completion of systems and schedule completion of Work before Substantial Completion of Project.

PART 2 PRODUCTS (NOT USED)

PART 3 EXECUTION

3.1 EXAMINATION

A. Verify that systems are complete and operable before commencing Work. Ensure the following conditions:
   1. Systems are started and operating in a safe and normal condition.
   2. Temperature control systems are installed complete and operable.
   3. Proper thermal overload protection is in place for electrical equipment.
   4. Duct systems are clean of debris.
   5. Fans are rotating correctly.
   6. Air outlets are installed and connected.
   7. Duct system leakage is minimized.
   8. Pumps are rotating correctly.

B. Submit field reports. Report defects and deficiencies noted during performance of services which prevent normal system operation.

C. Beginning of Work means acceptance of existing conditions.

3.2 PREPARATION

A. Provide instruments required for testing. Make instruments available to ENGINEER to facilitate spot checks during testing.

3.3 ADJUSTING

A. Ensure recorded data represents actual measured or observed conditions.

B. Permanently mark settings of valves, dampers, and other adjustment devices allowing settings to be restored.

C. After adjustment, take measurements to verify balance has not been disrupted or that such disruption has been rectified.

D. Leave systems in proper working order, replacing belt guards, closing access doors, closing doors to electrical switch boxes, and restoring thermostats to specified settings.

3.4 SYSTEM AIR EQUIPMENT TESTING PROCEDURES

A. Identify and list size, type and manufacturer of all equipment to be tested.

B. Use manufacturer's ratings for all equipment to make required calculations except where field

test shows ratings to be impractical.

C. Test and record motor voltage and running amperes across each phase connection, including verifying motor nameplate data.

D. Measure and record air temperatures entering and leaving system equipment, including dry-bulb and wet-bulb readings as warranted.

E. Measure and record air quantities at air inlets and outlets.

F. Measure and record vacuum and pressure at air inlets and outlets and where measurement devices have been installed.

G. Use volume control devices to regulate air quantities only to extent that adjustments do not create objectionable air motion or sound levels. Effect volume control by internal devices such as dampers and valves.

H. Measure and record noise levels near the equipment. Confirm that the measurements are consistent with manufacturer's literature.

I. Vary total system air quantities by adjustment of fan speeds. Provide drive changes required. Vary branch air quantities by damper or valve regulation.

J. Provide system schematic with required and actual air quantities recorded at each outlet or inlet.

K. Measure static air pressure conditions on the blower and total pressure across the fan.

L. Adjust exhaust dampers for design conditions.

M. Check control interlocks and cooperate with CONTRACTOR as required to adjust and calibrate system controls and instrumentation.

3.5 SYSTEM WATER EQUIPMENT TESTING PROCEDURES

A. Adjust water systems to provide required or design quantities.

B. Identify and list size, type and manufacturer of all equipment to be tested.

C. Use manufacturer's ratings for all equipment to make required calculations except where field test shows ratings to be impractical.

D. Test and record motor voltage and running amperes across each phase connection, including verifying motor nameplate data.

E. Measure and record fluid quantities at pumps inlets and outlets as allowed by measurement devices.

F. Measure and record vacuum and pressure at pump inlets and outlets and where measurement devices have been installed.

G. Use volume control devices to regulate flow rates only to extent that adjustments do not create objectionable fluid motion or sound levels. Effect volume control by valves and other control devices.

H. Provide system schematic with required and actual fluid quantities recorded at each outlet or inlet.

I. Check control interlocks and cooperate with CONTRACTOR as required to adjust and calibrate system controls and instrumentation.

3.6 CONTROL SYSTEMS

A. In cooperation with the control manufacturer's representative specified in Drawings and Specifications, set and adjust motorized devices to achieve required sequence of operations.

B. Testing organization shall verify controls for proper calibration and list those controls requiring adjustment.

C. Confirm that alarms and interlocks are triggered as specified in the design Drawings and Specifications. This should be completed as part of the system, to be supplied by the ENGINEER.

D. Confirm that flow, pressure, vacuum, temperature, and position readings are consistent between field mounted equipment and the control panel.

3.7 SCHEDULES

A. Equipment Requiring Testing, Adjusting, and Balancing:
   1. Blowers
   2. Unit Air Conditioners
   3. Fans
   4. Transfer pumps
   5. Condensate storage tank

B. Equipment Requiring Testing:
   1. Carbon vessels

C. Report Forms:
   1. Title Page:
      a. Project name.
      b. Project location.
      c. Project architect.
      d. Project engineer.
      e. Project contractor.
      f. Project altitude.
      g. Report date.
   2. Summary Comments:
      a. Design versus final performance.
      b. Notable characteristics of system.
      c. Summary of outdoor and exhaust flows to indicate amount of building pressurization.
      d. Nomenclature used throughout report.
      e. Test conditions.
   3. Electric Motors:
      a. Manufacturer.
      b. Model/frame.
      c. HP/BHP.
      d. Phase, voltage, amperage on each phase connection; nameplate, actual, no load.
      e. RPM.

f. Service factor.
g. Starter size, rating, heater elements.
h. Sheave make/size/bore.
i. Motor rotation

4. V-Belt Drive:
   a. Identification/location.
   b. Required driven rpm.
   c. Driven sheave, diameter and rpm.
   d. Belt, size and quantity.
   e. Motor sheave diameter and rpm.
   f. Center-to-center distance, maximum, minimum, and actual.
5. Air Moving Equipment:
   a. Location.
   b. Manufacturer.
   c. Model number.
   d. Serial number.
   e. Arrangement/class/discharge.
   f. Air flow, specified and actual.
   g. Return air flow, specified and actual.
   h. Outside air flow, specified and actual.
   i. Total static pressure (total external), specified and actual.
6. Pump Data:
   a. Identification/number.
   b. Manufacturer.
   c. Size/model.
   d. Impeller.
   e. Service.
   f. Design flow rate, pressure drop, BHP.
   g. Actual flow rate, pressure drop, BHP.
   h. Discharge pressure.
   i. Suction pressure.
   j. Total operating head pressure.
   k. Shut-off, discharge and suction pressures.
   l. Shut-off, total head pressure.
7. Exhaust Fan Data:
   a. Location.
   b. Manufacturer.
   c. Model number.
   d. Serial number.
   e. Air flow, specified and actual.
   f. Total static pressure (total external), specified and actual.
   g. Inlet pressure.
   h. Discharge pressure.
   i. Sheave make/size/bore.
   j. Number of belts/make/size.
   k. Fan rpm.
8. Sound Level Report:
   a. Location.
   b. Octave bands - equipment off.
   c. Octave bands - equipment on.
9. Vibration Test:
   a. Location of Points:
      - Fan bearing, drive end.
      - Fan bearing, opposite end.
      - Motor bearing, center (if applicable).

- Motor bearing, drive end.
- Motor bearing, opposite end.
- Casing (bottom or top).
- Casing (side).
- Duct after flexible connection (discharge).
- Duct after flexible connection (suction).

b. Test Readings:
   - Horizontal, velocity and displacement.
   - Vertical, velocity and displacement.
   - Axial, velocity and displacement.

c. Normally acceptable readings, velocity and acceleration.

d. Unusual conditions at time of test.

e. Vibration source (if non-complying).

10. Duct Traverse:
    a. System zone/branch.
    b. Duct size.
    c. Area.
    d. Design velocity.
    e. Design air flow.
    f. Test velocity.
    g. Test air flow.
    h. Duct static pressure.
    i. Air temperature.
    j. Air correction factor.

END OF SECTION

DIVISION 16

SECTION 16050

GENERAL PROVISIONS FOR ELECTRICAL SYSTEMS

PART 1 – GENERAL

1.1 DESCRIPTION

A. Scope:
   1. CONTRACTOR shall provide all labor, materials, equipment, and incidentals shown, specified, and required to complete the electrical Work, which includes:
      a. Providing conduits, inserts and other electrical items to be embedded in concrete, built into walls, partitions, ceilings, and panels provided by others.
   2. Temporary Utilities: CONTRACTOR shall provide temporary power and lighting in accordance with Section XXXXX, Temporary Utilities, Section XXXXX, Temporary Electricity, and Section XXXXX, Temporary Lighting.
   3. Demolition: Electrical demolition shall be in accordance with Section 01736, Demolition if applicable.
   4. Utility Companies:
      a. Electric Utility Company: Perform the Work in connection with the electric service and utility metering in accordance with requirements of (Owner).
      b. Telephone and Communications Utility Company: Perform the Work in connection with telephone service and communications services in accordance with requirements of (Owner).

B. Coordination:
   1. Review installation procedures and schedules under other contracts and coordinate with other contractors the installation of electrical items to be installed with or within formwork, walls, partitions, ceilings, and panels constructed by other contractors.
      a. Furnish as required to other contractors detailed drawings or sketches of the locations of conduits and other built-in items.
      b. Coordinate with other contractors regarding progress of construction where conduits and built-in items are will be installed. Install conduits and built-in items in manner that does not delay work of other contractors.
   2. Coordination and Intent of Electrical Drawings:
      a. Dimensions on Drawings related to equipment are based on equipment of certain manufacturers. Verify the dimensions of equipment furnished to space available at the Site and allocated to the equipment.
      b. Drawings show the principal elements of the electrical Work, and are not intended as detailed working drawings for the electrical Work. Drawings supplement and complement the Specifications and other Contract Documents relative to principal features of electrical systems.
      c. Equipment and devices provided under this Contract (and other contracts) shall be properly connected and interconnected with other equipment and devices for successful operation of complete systems, whether or not all connections and interconnections are specifically mentioned or shown in the Contract Documents.
      d. Drawings are provided for CONTRACTOR's guidance in fulfilling the intent of the Contract Documents CONTRACTOR shall comply with Laws and Regulations,

including safety and electrical codes, and provide materials, equipment, appurtenances, and specialty items necessary for complete and operable systems.

3. Field Coordination:
   a. Provide materials, equipment, and services to interface with existing circuits. Field-verify system and equipment requirements prior to modifying existing systems.
   b. Coordinate the interface of equipment with OWNER's personnel and field conditions.
   c. Field-compare existing starter and panel control circuit terminations from record documents with existing circuits.
   d. Field-trace existing circuits as required to interface the equipment provided.
   e. Field-identify terminations for starters and panel controls for follow function for re-connection.

C. Related Sections:
   1. Section 01736, Selective Demolition.
   2. Section 03301, Cast-in-Place Concrete.
   3. Section 03480, Precast Concrete Specialties
   4. Section 03920, Concrete Resurfacing
   5. Section 05501, Anchor Systems.
   6. Section 09900, Painting.
   7. Section 02200, Earthwork.
   8. Section XXXXX, Process Control Systems General Provisions.
   9. Section 01600, Product Requirements or per specific Division 16 Section(s).

D. Work Included in This Contract but Specified Elsewhere:
   1. Concrete for pads, manholes, ductbanks, and conduit encasement shall comply with Section 03301, Cast-in-Place Concrete or Section 03920, Concrete Resurfacing, as applicable.
   2. Anchorage systems shall comply with Section 05501, Anchor Systems.
   3. Shop painting and surface preparation shall comply with ¬Section 09900, Painting, unless otherwise specified in Division 16 Sections.
   4. Excavation and filling associated with buried electrical Work shall comply with Section 02200, Earthwork.

D. Materials and Equipment Installed by CONTRACTOR but Furnished by Others:
   1. (--1--).

E. Area Classifications:
   1. Materials, equipment, and incidentals shall be suitable for the area classification(s) shown, specified, and required.
   2. Wet Locations: Comply with NEC and NEMA requirements for wet locations. Enclosures in wet locations shall comply with NEMA 4X unless specified otherwise.
   3. Corrosive Locations: Comply with NEC and NEMA requirements for corrosive locations. Enclosures in corrosive locations shall conform to NEMA 4X requirements unless specified otherwise.
   4. Hazardous Locations: Comply with NEC requirements for the Class and Division designated, as applicable.

5. Dusty Locations: Indoor areas not designated as hazardous, corrosive, or wet are dusty locations. Comply with NEC and NEMA 12 requirements unless specified otherwise.

1.2 QUALITY ASSURANCE

A. Qualifications:
   1. Wiring Coordinator:
      a. Retain services of a wiring coordinator who shall prepare complete point-to-point interconnection wiring diagrams. Diagrams shall identify all external interconnecting wiring associated with new or modified existing equipment.
      b. Qualifications: Wiring coordinator shall be experienced in developing diagrams of the type required and shall have served in a similar wiring coordinator role on a completed project of similar size and complexity to the Project.
         1) Submit qualifications and approach for the Project not later than the pre-submittal conference required in Section XXXXX, Process Control Systems General Provisions.
         2) Submit to ENGINEER the items indicated below not less than three weeks prior to the pre-submittal conference required in Section XXXXX, Process Control Systems General Provisions:
            a) List of projects where the wiring coordinator developed point-to-point wiring diagrams.
            b) Samples of diagrams developed for the listed projects.
            c) Example wiring diagram proposed for the Project with a preliminary list of drawings to be produced.
            d) Plan of how information will be obtained and documented.
      c. Responsibilities:
         1) Develop diagrams for performing the Work and to document terminations. Prepare diagrams in accordance with this Section and the example wiring diagram accepted by ENGINEER. Diagrams are in addition to loop diagrams required in Section XXXXX, Process Control Systems General Provisions.
         2) Use information obtained from approved Shop Drawings and approved CONTRACTOR's other submittals, approved (and accepted, as applicable) shop drawings and submittals of other contractors, record drawings, and field inspections as required to complete the diagrams.
         3) Attend pre-submittal conference required under Section XXXXX, Process Control Systems General Provisions, and periodic coordination and progress meetings required in Section XXXXX, Project Coordination; Section XXXXX, Progress Meetings; and Section XXXXX, Process Control Systems General Provisions.

B. Component Supply and Compatibility:
   1. Materials and equipment similar to each other shall be from the same manufacturer for uniformity.

C. Regulatory Requirements:
   1. Permits: Refer to the General Conditions, Supplementary Conditions, and other parts of the Contract Documents for responsibilities relative to obtaining and paying for permits, licenses, and inspection fees.

Codes: Refer to Section XXXXX, References, for indication of applicable codes.

1.3 SUBMITTALS

A. General:
   1. To the extent practical, submit Shop Drawings and other CONTRACTOR submittals for each Specification Section into the smallest number of submittals possible. Do not furnish partial submittals.
   2. Review of equipment submittals does not relieve CONTRACTOR of responsibility for providing complete and successfully operating systems.

B. Action Submittals: Submit the following:
   1. Shop Drawings:
      a. Internal wiring diagram and drawings indicating all connections to components and numbered terminals for external connections.
      b. Dimensioned plan, section, elevations, and panel layouts showing means for mounting, conduit connection, and grounding.
      c. List of components including manufacturer's name and catalog number (or part number) for each.
      d. Point-to point interconnection wiring diagrams.
   2. Product Data:
      a. Manufacturer's name and product designation or catalog number.
      b. Electrical ratings.
      c. Manufacturer's technical data and specifications.
      d. Manufacturer's indication of compliance with applicable reference standards.
      e. Painting and coating systems proposed.
   3. Test Procedures: Proposed testing procedures and testing limitations for source quality control testing and field quality control testing.

C. Informational Submittals: Submit the following:
   1. Manufacturer's Instructions:
      a. Installation data and instructions.
      b. Instructions for handling, starting-up, and troubleshooting.
   2. Source Quality Control Submittals: Results for required shop testing.
   3. Field Quality Control Submittals: Results for required field testing.
   4. Qualifications:
      a. Wiring coordinator, including information required of wiring coordinator in Paragraph 1.2.A of this Section.

D. Closeout Submittals: Submit the following:
   1. Record Documentation:
      a. System Record Drawings: Include the following:
         1) One-line wiring diagram of the electrical distribution system.
         2) Actual, in-place conduit and cable layouts with schedule of conduit sizes and number, and size of conductors.
         3) Layouts of the power and lighting arrangements and the grounding system.
         4) Control schematic diagrams, with terminal numbers and control devices identified, for all equipment.

b. Point-to-Point Interconnection Wiring Diagram Drawings: Include the following:
   1) External wiring for each piece of equipment, panel, instrument, and other devices and wiring to control stations, lighting panels, and motor controllers.
   2) Numbered terminal block identification for each wire termination.
   3) Identification of the assigned wire numbers for all interconnections.
   4) Identification of wiring by the conduit tag in which the wire is installed.
   5) Terminal, junction, and pull boxes through which wiring is routed.
   6) Identification of equipment and the submittal transmittal number for equipment from which wiring requirements and termination information was obtained.

c. Record documents shall indicate final equipment and field installation information.

1.4 PRODUCT DELIVERY, STORAGE, AND HANDLING

A. Refer to Section 01600, Product Requirements or per specific Division 16 Section(s).

PART 2 – PRODUCTS

A. Performance Criteria:
   1. Electrical equipment shall be capable of operating successfully at full-rated load, without failure, with ambient outside air temperature of (--1--) degrees F to (--2--) degrees F and an elevation of (--3--) feet above mean sea level.
   2. Unless specified otherwise, electrical equipment shall have ratings based on 75 degrees C terminations.

B. Testing Laboratory Labels: Electrical material and equipment shall bear the label of Underwriters' Laboratories, Inc. or other nationally recognized, independent testing laboratory, where standards have been established and label service applies.

PART 3 – EXECUTION

3.1 INSPECTION

A. Examine conditions under which Work will be performed and notify ENGINEER in writing of conditions detrimental to the proper and timely completion of the Work. Do not proceed with work until unsatisfactory conditions are corrected.

3.2 INSTALLATION

A. General:
   1. Install materials and equipment in accordance with the Contract Documents, Laws and Regulations, approved (and accepted, as applicable) Shop Drawings and other CONTRACTOR submittals, and manufacturer's recommendations.
   2. Provide tools and equipment required to trace circuits necessary for proper execution of the Work.

3. Define and identify all wiring, circuit terminations, and equipment to be modified to ensure proper interface of components. The Contract Price includes all costs associated with field services specified for a complete and functional system.

B. Staging, Sequencing, and Coordination with Existing Facilities:
   1. Schedule, sequence, and install materials and equipment in accordance with Section XXXXX, Coordination with Owner's Operations
   2. Perform the Work in a manner that will not interfere with the existing equipment and facilities or cause interruption of the functions of the Site, unless specified otherwise or otherwise allowed by OWNER.
   3. When operation of existing facilities and Site is disrupted due to CONTRACTOR's operations, comply with Section XXXXX, Coordination with Owner's Operations, unless otherwise allowed by OWNER.
   4. Where the Work ties in with existing installations, take precautions and provide safeguards in connecting the Work to existing operating circuits to prevent interruption to existing circuits. Connection of Work to existing circuits shall be performed in the presence of OWNER and ENGINEER.
   5. Interruptions of existing circuits, not addressed in Section XXXXX, Coordination with Owner's Operations, shall be coordinated with the OWNER who will determine the length of time a circuit may be de-energized to maintain the OWNER's processes in dependable and safe operation.

3.3 FIELD QUALITY CONTROL

A. Field Quality Control – General:
   1. Perform field quality control for electrical Work in accordance with the Contract Documents.

B. Site Tests:
   1. Prior to requesting certificate of Substantial Completion, demonstrate to ENGINEER that electrical systems and electrically-operated equipment installed or modified under the Contract operates in accordance with the Contract Documents and operates as required
   2. Perform the following operational tests on electrical systems:
      a. Operate power circuits to verify proper operation and connection to electrical systems materials and equipment, including mechanical key-interlocks for circuit breakers.
      b. Remove and re-apply power supply to automatic transfer equipment to verify operation. Activate standby power systems to verify their automatic start-up, proper de-energization, and cool down upon resumption of normal power supply.
      c. Operate control circuits, including pushbuttons, indicating lights, and similar devices, to verify proper connection and function. Operate all devices, such as pressure switches, flow switches, and similar devices, to verify that shutdowns and control sequences operate as required.
      d. Operate lighting systems and receptacle devices to verify proper operation and connections.
   3. Prepare and submit report on the equipment demonstration and operating field quality control tests. Report shall include complete information on the tests performed and results.

C. Manufacturer's Services:
   1. Furnish at the Site qualified, factory-trained representative(s) of equipment manufacturers for the services indicated in the Contract Documents, as applicable.

END OF SECTION

SECTION 16070

HANGERS AND SUPPORTS FOR ELECTRICAL SYSTEMS

PART 1 – GENERAL

1.1 DESCRIPTION

A. Scope:
1. CONTRACTOR shall provide all labor, materials, equipment, and incidentals as shown, specified, and required to furnish and install hangers and supports for electrical systems.
2. Area Classifications: Materials shall by suitable for the area classification(s) shown or indicated on the Drawings, and specified in Section 16050, General Provisions for Electrical Systems.

B. Related Sections:

1. Section 05501, Anchor Systems.
2. Section 16050, General Provisions for Electrical Systems.
3. Section 16131, Rigid and Flexible Conduits.

1.2 REFERENCES

A. Standards referenced in this section are:
1. ASTM A123/A123M, Specification for Zinc (Hot-Dip Galvanized) Coatings on Iron and Steel Products.
2. ASTM A1011/A1011M, Specification for Steel, Sheet and Strip, Hot-Rolled, Carbon, Structural, High-Strength Low-Alloy, High-Strength Low-Alloy with Improved Formability, and Ultra-High Strength.
3. ASTM E84, Test Method For Surface Burning Characteristics of Building Materials

1.3 QUALITY ASSURANCE

A. (--1--):

1.4 SUBMITTALS

A. Action Submittals: Submit the following:
1. Shop Drawings:
a. Detailed installation drawings showing dimensions and compatibility with proposed layout.
2. Product Data:
a. Manufacturer's name, product designation, and catalog number of each material item proposed for use.

b. Manufacturer's specifications including material, dimensional and weight data, and load capacity for each supporting system component proposed for use.
c. Pictorial views and corresponding identifying text of each component proposed for installation.
d. Documentation that confirms product compatibility with Laws and Regulations.

B. Informational Submittals: Submit the following:
1. Certifications:
a. Submit certifications required under this Section.
2. Manufacturer's Instructions:
a. Manufacturer's installation instructions, including recommended tightening torque values for all nuts and bolts.

PART 2 – PRODUCTS

2.1 MANUFACTURERS

A. Manufacturers: Provide products of one of the following:
1. B-Line.
2. Kindorf.
3. Unistrut
4. Or equal.

2.2 MATERIALS

A. Strut, Fittings, and Accessories:
1. General
a. Unless otherwise shown or indicated, strut shall be 1-5/8 inches by 1-5/8 inches. Double struts shall be two pieces of the same strut, welded back-to-back at the factory.
b. Attachment holes, when required, shall be factory-punched on hole centers approximately equal to the cross-sectional width and shall be 9/16-inch diameter.
c. Fittings, braces, brackets, hardware, and accessories shall consist of angle iron, channel iron, "unistrut", galvanized rods or cadmium-plated rods and, when required, covered with steel plate.
d. Equipment racks for mounting electrical equipment shall be fabricated from P-1000 "unistrut" unless shown otherwise on the drawings. Racks Shall be of bolted or welded construction.
e. Strut nuts shall be spring captured Type 316 stainless steel.
f. Square and round washers shall be Type 316 stainless steel.
2. Strut materials shall be suitable for area classifications indicated in Section 16050, General Provisions for Electrical Systems, and shown or indicated on the Drawings.
a. Dusty Locations:
1) Strut shall be 12-gage carbon steel, hot-dip galvanized after fabrication, complying with ASTM A123/A123M.
b. Wet Locations:

1) Strut shall be 12-gage Type 316 stainless steel.

c. Corrosive Locations:

1) Strut shall be 12-gage Type 316 stainless steel.

B. Hanger Rods:

1. Material:

a. Dry Locations: galvanized or cadmium plated

b. Wet, Corrosive, or Hazardous Areas: Stainless steel.

2. Size: Not less than 3/8-inch diameter, unless otherwise shown on the Drawings or specified.

C. Beam Clamps for Attaching Threaded Rods or Bolts to Beam Flanges for Hanging Struts or Conduit Hangers:

1. Beam clamps shall be galvanized steel equipped with square-head set screw, and shall include threaded hole sized for attaching the all-thread rod or threaded bolt.

D. Miscellaneous Hardware:

1. Bolts, screws, and washers shall be galvanized or stainless steel.

2. Equipment shall be fastened with hex head bolts, spring nuts, and lock washers.

PART 3 – EXECUTION

3.1 INSPECTION

A. Examine conditions under which the Work will be installed and notify ENGINEER in writing of conditions detrimental to the proper and timely completion of the Work. Do not proceed with the Work until unsatisfactory conditions are corrected.

3.2 INSTALLATION

A. Provide hangers and supports for electrical systems with necessary channels, fittings, brackets, and related hardware for mounting and supporting materials and equipment. Provide anchor systems, concrete inserts, and associated hardware for proper support of electrical systems.

B. Install equipment and devices on hangers and supports as shown on the Drawings, as specified, and as required.

C. Install hangers and supports level, true, free of rack, and parallel and perpendicular to building walls and floors, so that the hangers and supports are installed in a neat, professional, workmanlike manner.

D. Holes in suspended ceilings for rods for hangers and supports and other equipment shall be provided adjacent to bars, where possible, to facilitate removal of ceiling panels.

E. Coordinate installation of hangers and supports with equipment, cabinets, consoles, panels, enclosures, boxes, conduit, cable tray, wireway, busway, cablebus, piping,

ductwork, lighting fixtures, and other systems and equipment. Locate hangers and supports clear of interferences and access ways.

F. Anchor Bolts, Expansion Anchors, and Concrete Inserts: Shall be in accordance with Section 05501, Anchor Systems, and requirements of this Section.

G. Mounting of Conduit:
   1. Provide space of not less than 1/4-inch between conduit surfaces and abutting or near surfaces except struts, cable trays, steel beams, and columns.
   2. Fasten conduit to struts, cable trays, steel beams, and columns using specified clamps and straps as shown, specified, and required.
   3. Devices shall be compatible with size of conduit and type of support. Following installation, size identification shall be visible and legible.
   4. Install conduit supports and fasteners in accordance with Section, 16131, Rigid and Flexible Conduits.

H. Supports for Cabinets, Consoles, Panels, Enclosures, and Boxes:
   1. Freestanding: Unless otherwise specified or shown on the Drawings, provide supports for floor-mounted equipment, cabinets, consoles, panels, enclosures, and boxes. Such supports shall be 3.5-inch high concrete equipment base with a 45 degree chamfered edge. Base shall extend two inches beyond outside dimensions of equipment on all sides.
   2. Wall-Mounted:
      a. Provide space not less than 1/4-inch between cabinets, consoles, panels, enclosures, and boxes and the surface on which each is mounted. Provide non-metallic or stainless steel spacers as required.
      b. Do not mount equipment, enclosures, panels, and boxes directly to beams or columns. Mount struts to beams or columns using beam clamps, and mount equipment, enclosures, panels, and boxes to the struts.
   3. Floor Stand Rack:
      a. Where equipment, cabinets, consoles, panels, enclosures, and boxes cannot be wall-mounted, provide an independent floor stand rack.
      b. Floor stand rack shall consist of struts, plates, brackets, connection fittings, braces, accessories, and hardware assembled in a rigid framework suitable for mounting of intended materials and equipment.
      c. Equip floor stand racks with brackets and bases for rigidly-mounting the framework to the ceiling or floor, as applicable; or equip floor stand racks with beam clamps, angle plates, washers, and bolts for fastening to beam flanges, as applicable.
      d. When equipment, cabinets, consoles, panels, enclosures, and boxes weigh more than 100 pounds:
         1) Main vertical supports of floor stand rack assemblies shall be back-to-back struts.
         2) Bracing, clamping and anchoring of each floor stand rack shall be sufficient to ensure rigidity of the floor stand rack with the intended equipment, enclosures, conduit, cable tray, busway, cablebus, and wireway installed. Floor stand racks shall not be deflected more than 1/8-inch by a 100-pound force applied at any point on the floor stand rack in any direction.

I. Drilling into beams or columns is not allowed unless authorized by ENGINEER.

J. Tighten nuts and bolts to the manufacturer's recommended torque values.

K. Field Cutting:
   1. Cut edges of strut and hanger rod shall have rounded corners, edges beveled, and burrs removed. If field cutting the strut is required, use clean, sharp, dedicated tools. Remove oil, shavings, and other residue of cuttings prior to installation.
   2. Coatings: To prevent corrosion:
      a. Cleaned of rust and scale
      b. Painted with one coat of metal primer and finish paint, or as specified on drawings.
      c. Coat cut edges with zinc-rich paint.

END OF SECTION

THIS PAGE INTENTIONALLY LEFT BLANK

SECTION 16075

IDENTIFICATION FOR ELECTRICAL SYSTEMS

PART 1 GENERAL

1.1 DESCRIPTION

A. Scope:
   1. CONTRACTOR shall provide all labor, materials, equipment, and incidentals shown, specified, and required to furnish and install identification for electrical apparatus and electrical Work.

B. Related Sections:
   1. Section 16122, Low Voltage Electrical Power Conductors and Cables.
   2. Section 16123, Medium Voltage Cable.
   3. Section XXXXX, Process Control Systems General Provisions.

1.2 QUALITY ASSURANCE

A. Regulatory Requirements: Comply with the following, as applicable:
   1. NEC Article 110, Requirements for Electrical Installation.
   2. NEC Article 210, Branch Circuits.
   3. NEC Article 215, Feeders.
   4. NEC Article 504, Intrinsically Safe Systems.
   5. NEC Article 700, Emergency Systems.
   6. NEC Article 701, Legally Required Standby Systems.
   7. NEC Article 702, Optional Standby Systems.
   8. 40 CFR 1910.145 (OSHA) – Specification for Accident Prevention Signs and Tags.
   9. NFPA 70E, Electrical Safety in the Workplace.

1.3 SUBMITTALS

A. Action Submittals: Submit the following:
   1. Shop Drawings: Submit the following:
      a. Complete description and listing of proposed electrical identification and electrical identification devices for associated equipment or systems.
      b. Conduit and wire identification numbering system and equipment signage.
   2. Product Data:
      a. Manufacturer's literature, cut sheets, specifications, dimensions and technical data for all products proposed under this Section.

PART 2 – PRODUCTS

2.1 MANUFACTURED UNITS

A. Engraved Identification Devices (Nameplates and Legend Plates):
   1. Nameplates:
      a. Laminated thermoset plastic, 1/16-inch thick, engraved condensed block black lettering on white background, square corners, and beveled front edges, or match existing.
      b. Size: As required.
      c. Letter Size: Minimum 3/16-inch.
      d. Nameplates one-inch or less in height shall have one mounting hole at each end. Nameplates greater than one-inch in height shall have mounting holes in the four corners.
   2. Legend Plates:
      a. Legend plates for pushbuttons, pilot lights, selector switches, and other panel-mounted devices shall be large size with dimensions of approximately 2-7/16 inches wide by 2-13/32 inches tall (Allen Bradley large automotive size), plastic, custom engraved with black letters on white background.
         1) Provide standard-size legend plates where devices are mounted on motor control centers and spacing of devices precludes using automotive-size legend plates.
      b. Lettering size and line weight shall be the same for all legend plates on the same panel or enclosure. Maximum size shall be 1/4-inch and minimum size shall be 1/8-inch.

B. Safety Signs and Voltage Markers:
   1. Provide high voltage signs for equipment operating over 600 volts.
   2. High-Voltage Safety Signs for Outdoor Applications:
      a. Products and Manufacturers: Provide one of the following:
         1) B-120-45471 by Brady.
         2) Or equal.
      b. Unless otherwise shown or indicated, high voltage safety signs shall be not less than 10 inches high by 14 inches wide, of fiberglass reinforced plastic, and shall comply with 40 CFR 1910.145. Signs shall resist fading from exposure to temperature extremes, ultraviolet light, abrasive, and corrosive environments, and shall read, "DANGER – HIGH VOLTAGE – KEEP OUT"
      c. Mounting hardware shall be Type 316 stainless steel.
   3. High-Voltage Safety Signs for Indoor Applications:
      a. Products and Manufacturers: Provide one of the following:
         1) B-302-84084 by Brady.
         2) Or equal.
      b. High voltage safety signs for installation on indoor equipment shall be either pressure-sensitive acrylic or vinyl, and shall be not less than 10 inches high by 14 inches wide, shall comply with 40 CFR 1910.145, and shall read, "DANGER – HIGH VOLTAGE – KEEP OUT".
   4. Cable Tray Safety Signs:
      a. Products and Manufacturers: Provide one of the following:
         1) B-302-86139 by Brady.
         2) Or equal.
      b. Cable tray safety signs shall be pressure-sensitive vinyl conforming to 40 CFR 1910.145, 5 inches by 3.5 inches in size, and shall read, "DANGER – HIGH VOLTAGE"
   5. Low-Voltage Safety Signs:
      a. Products and Manufacturers: Provide one of the following:

1) B-302-86060 by Brady.
2) Or equal.

b. Low voltage safety signs shall be pressure-sensitive vinyl complying with 40 CFR 1910.145, five inches by 3.5 inches in size, and shall read, "DANGER – 480 VOLTS".

6. Low-Voltage Markers:
   a. Products and Manufacturers: Provide one of the following:
      1) CV442xx by Brady.
      2) Or equal as approved by engineering.
   b. Low voltage markers shall be ¾ inch width aluminum adhesive tape having raised lettering approximately ½ inch high or other method approved by engineering.

C. Arc-flash Safety Signs:
   1. Products and Manufacturers: Provide one of the following:
      a. Brady.
      b. Or equal.
   2. Warning signs shall be adhesive-backed polyester.
   3. Warning signs shall read, "Warning – Arc Flash and Shock Hazard. Appropriate PPE Required. Arc flash warning signs shall indicate the flash protection boundary, incident energy in calories per square centimeter, hazard level, description of required protective clothing, shock hazard, limited approach boundary, restricted approach boundary, prohibited approach boundary, and equipment name.

D. Voltage System Identification Directories:
   1. General:
      a. Directories shall be laminated thermoset plastic, 1/16-inch thick, engraved block black letters on white background, square corners, and beveled front edges.
      b. Directories shall identify all voltage systems within building or structure.
      c. Directories shall list the colors that identify ungrounded and grounded conductors of each system.
      d. Colors shall be in accordance with Section 16122, Low Voltage Electrical Power Conductors and Cables, Section 16123, Medium Voltage Cable, and Section 16123, Medium Voltage Cable
      e. Example Directory Text:

Voltage System Identification		
System	**A, B, C**	**Neutral**
277/480	Yellow, Orange, Brown	White
120/208	Black, Blue, Red	White

   2. Large directories for rooms shall have text height not less than 1/2-inch.
   3. Small directories for equipment shall have text height of not less than 1/4-inch.

E. Conduit Labels:
   1. Conduits shall be identified with aluminum tape having raised lettering or tags with engraved lettering in accordance with the conduit and cable schedules shown on the drawings.
   2. The identification tape and/or tags shall be securely attached to conduit with "Tyraps".
   3. The conduits shall be identified at the switchgear, entry and exit points of all junction and pull boxes, on both sides of any walls or floors which conduits penetrate, and at

equipment in which they terminate. Conduits run underground shall be identified at both ends.

F. Wire and Cable Identification:
   1. All single-conductor power and control wiring shall be identified in all junction boxes and at all terminations. Identification shall be by means of sleeve type, slip-on labels with permanently applied printed numbers or letters that are attached to each conductor in accordance with the numbering system on the drawings.
   2. Each conductor of three phase power feeders shall also be identified by phase designations (A, B, C) at all splices and terminations.
   3. Multi-conductor cables installed in conduits, wireways, manholes, power tunnels, cable trays, etc., shall be identified at each termination point, splice box, and at all pull points with permanent, plastic, flag type identification labels. Each conductor of a cable shall also be identified at all terminations and splices with sleeve-type, slip-on labels with permanently applied printed numbers or letters.

G. Detectable Underground Warning Tape:
   1. Products and Manufacturers: Provide one of the following:
      a. Indentoline by Brady.
      b. Or equal.
   2. Material: Polyethylene or polyester with detectable metal core and polyester underlaminate.
   3. Width: Two inches.
   4. Color and Labeling: Yellow or red with permanently imprinted black letters: "CAUTION – Buried Electric Line", repeated continuously over full length of tape.

H. Thermal Printing System:
   1. Utilize thermal transfer process to provide non-smearing labels and markers.
   2. Wire and Cable Markers:
      a. Portable, Products and Manufacturers: Provide one of the following:
         1) TLS2200 by Brady.
         2) Or equal.
      b. Desktop, Products and Manufacturers: Provide one of the following:
         1) 200M by Brady.
         2) Or equal.
   3. Cable Markers:
      a. Portable, Products and Manufacturers: Provide one of the following:
         1) Handimark by Brady.
         2) Or equal.
      b. Desktop, Products and Manufacturers: Provide one of the following:
         1) Labelizer PLUS by Brady.
         2) Or equal.

I. Generator System Warning Signs:
   1. Generator warning signs shall be labeled in accordance with NEC Article 700, NEC Article 701, or NEC Article 702.
   2. Material, Colors, Letters: Plastic with white letters on red background. Letters shall be not less than 3/8-inch high.
   3. Attachment: Use stainless steel self-tapping screws.

4. Location warning sign shall read, "WARNING – THIS SITE EQUIPPED WITH A DIESEL DRIVEN STAND-BY GENERATOR LOCATED IN AN ADJACENT ROOM".
5. Generator ground warning sign shall read, "WARNING – GENERATOR GROUNDED CIRCUIT CONDUCTOR IS CONNECTED TO THE GROUNDING ELECTRODE CONDUCTOR IN THIS ENCLOSURE. DO NOT OPERATE GENERATOR WHILE EITHER CONDUCTOR IS DISCONNECTED TO AVOID SEVERE SHOCK HAZARD AND POSSIBLE EQUIPMENT DAMAGE."

2.2 FABRICATION

A. Engraved Identification Devices (Nameplates and Legend Plates):
   1. Nameplate and legend plate text is preliminary and subject to change pending final review and approval of nomenclature by ENGINEER after start-up and testing.

PART 3 – EXECUTION

3.1 INSTALLATION

A. Provide electrical identification in accordance with manufacturer recommendations and as required for proper identification of equipment and materials.

B. Engraved and Adhesive Identification Devices (Nameplates and Legend Plates):
   1. Unless otherwise indicated in the Contract Documents, attach permanent nameplates with permanent adhesive and/or with 3/16-inch diameter, round head, stainless steel machine screws into drilled and tapped holes.
   2. Provide nameplate with 1.5-inch high letters to identify each console, cabinet, panel, or enclosure as shown or indicated.
   3. Provide nameplates for field-mounted motor starters, disconnect switches, manual starter switches, pushbutton stations, and similar equipment operating components, which shall describe motor or equipment function and circuit number.
   4. Provide nameplates with 1/2-inch high letters to identify each junction and terminal box shown or indicated.
   5. On switchgear, provide nameplates for each main and feeder circuit including control fuses, and for each indicating light and instrument.
      a. Provide nameplate with 1.5-inch high letters giving switchgear designation, voltage rating, ampere rating, short circuit rating, manufacturer's name, general order number, and item number.
      b. Identify individual door for each compartment with nameplate giving item designation and circuit number.
   6. Motor Control Centers:
      a. Provide nameplate with 1.5-inch letters with motor control center designation.
      b. Identify individual door for each unit compartment with nameplate identifying controlled equipment.
   7. Except conduit, all electrical appurtenances including lighting panels, convenience outlets, fixtures, and lighting switches, shall be provided with nameplates indicating appropriate circuit breaker number(s).
   8. Push Buttons:
      a. Provide legend plates for identification of functions.
      b. Provide nameplates for identification of controlled equipment.

c. Provide red buttons for stop function.
d. Provide black buttons for other functions.

9. Pilot Lights:
   a. Provide legend plates for identification of functions.
   b. Provide nameplates for identification of controlled equipment.
   c. Shall have lens colors as shown or indicated. Where no color is indicated, provide the following lens colors:

Color	Legend
Green	Running, Open
Red	Stopped, Closed
Amber	Alarm
Blue	Power
White	Status

10. Selector Switches:
    a. Provide legend plates for identification of functions.
    b. Provide nameplates for identification of controlled equipment.
11. Panel Mounted Instruments:
    a. Provide nameplates for identification of function.
12. Interiors of Cabinets, Consoles, Panels, Terminal Boxes, and Other Enclosures:
    a. Provide nameplates for identification.
    b. Provide each item inside cabinet, console, panel, terminal box, or enclosure with laminated plastic nameplate as shown on approved Shop Drawings and CONTRACTOR"s other submittals. Install nameplates with adhesive.
    c. Interior items requiring nameplates include:
       1) Terminal blocks and strips.
       2) Bus bars.
       3) Relays.
       4) Rear of face-mounted items.
       5) Rear of door-mounted items.
       6) Interior mounted items that require identification when mounted externally.
    d. Circuit Breaker Directory:
       1) Provide engraved laminated plastic directory listing function and load controlled for each circuit breaker within panel used for power distribution.
13. Re-label existing equipment whose designation have changed.

C. Safety Signs and Voltage Markers:
   1. Provide safety signs and voltage markers on and around electrical equipment as shown or indicated.
      a. Install rigid safety signs using stainless steel fasteners.
      b. Clean surfaces before applying pressure-sensitive signs and markers.
   2. Install high voltage safety signs on all equipment doors providing access to uninsulated conductors, including terminal devices, greater than 600 volts.
   3. Provide cable tray safety signs on both sides of cable trays at maximum intervals of 20 feet. Install signs on side rails of tray as acceptable to ENGINEER.
      a. Label cable trays that contain conductors greater than 600 volts with cable tray safety signs.
      b. Cable trays that contain conductors greater than 208 volts and less than 600 volts shall be labeled with low voltage safety signs.

c. Cable trays that contain conductors of 120/208 volts shall be labeled with low voltage markers.
d. Do not label cable trays that contain only instrument signal cables.
e. Label cable trays that contain intrinsically safe wiring or cables in accordance with NEC Article 504.

4. Install low voltage safety signs on equipment doors that provide access to uninsulated 480-volt conductors, including terminal devices.
5. Install low voltage markers on each terminal box, safety disconnect switch, and panelboard installed, modified, or relocated as part of the Work and containing 120/208 volt conductors.

D. Voltage System Identification Directories
1. Provide voltage system identification directories as required by NEC Article 210 and NEC Article 215.
2. Provide in each electrical room voltage system identification directory mounted on wall or door at each entrance to room.
3. For panelboards, switchboards, motor control centers, and other branch circuit or feeder distribution equipment that are not located in electrical rooms, provide voltage system identification directory mounted on equipment.
a. Directories shall be affixed using epoxy glue. Screws or bolts shall not penetrate equipment enclosures.
b. Directories shall be readily visible and not obscure labels and other markings on equipment.

E. Arc-flash Safety Signs:
1. Provide arc-flash safety signs as required by NEC Article 110.
2. Provide signs for switchboards, panelboards, motor control centers, and industrial control panels. Provide signs for control panels that contain 480 volt equipment. Provide arc flash warning signs on other equipment where the incident energy is greater than 1.2 calories per square centimeter.

F. Conduit Labels:
1. Provide conduits with conduit labels unless otherwise shown or indicated.
2. Do not label flexible conduit.
3. Do not label exposed single conduit runs of less than 25 feet between local disconnect switches and their associated equipment.
4. Conduit labels shall indicate the following information:
a. Conduit Number: Alphanumeric as shown on the Drawings, as assigned by CONTRACTOR for unlabeled conduits, and in accordance with approved submittals.
5. Conduits that contain intrinsically safe wiring shall have an additional pipe marker provided that has blue letters on white background and reads, "INTRINSICALLY SAFE WIRING".
a. Install intrinsically safe pipe markers in accordance with NEC Article 504 along entire installation. Spacing between labels shall not exceed 25 feet.
6. Provide conduit labels at the following locations:
a. Where each conduit enters and exits walls, ceilings, floors, slabs, or underground (both sides as they emerge).
b. Where conduit enters or exits boxes, cabinets, consoles, panels, enclosures, or pull and junction boxes.
c. At maximum intervals of 50 feet along length of conduit.

7. Orient conduit labels to be readable.

G. Wire and Cable Identification:
1. Color-coding of insulated conductors shall comply with Section 16122, Low Voltage Electrical Power Conductors and Cables, Section 16123, Medium Voltage Cable.
2. Use heat-shrinkable wire labels where wire or cable is terminated. Use wrap-around labels where wire or cable is to be labeled but is not terminated.
3. Do not provide labels for the following:
   a. Bare (uninsulated) conductors, unless otherwise shown or indicated as labeled.
4. Provide wire and cable labels for the following:
   a. New, rerouted, or revised wire or cable.
   b. Insulated conductors.
   c. Wire and cable terminations:
      1) Wire labels shall be applied between 1/2-inch and one inch of completed termination
      2) Apply cable labels between 1/2-inch and one inch of cable breakout into individual conductors.
         a) Label individual conductors in a cable after breakout as specified for wires.
   d. Wire or cable exiting cabinets, consoles, panels, terminal boxes, and enclosures.
      1) Label wires or cables within two inches of entrance to conduit.
   e. Wire or cable in junction boxes and pull boxes
      1) Label wires or cables within two inches of entrance to conduit.
   f. Wire and cable installed in cable tray.
      1) Wire and cable shall have labels at maximum intervals of 20 feet.
   g. Wire and cable installed without termination in electrical manholes.
      1) Wire and cable shall have wrap-around labels applied within one foot of exiting manhole.
5. Wire and Cable Identification System:
   a. Wire and cable labels shall be imprinted with an identifying designator.
      1) Wire and cable extending between two devices or items and that does not undergo a change of function shall be identified by a single unique designator as specified below.
   b. Field Wiring:
      1) Wire or cable designator shall consist of:
         a) Remaining characters shall be alphanumeric and make wire designator unique per numbering system on the drawings.
         b) Contractor shall name and record any wiring not named, in the drawings, per similar naming techniques outlined in the drawings.
   c. Cabinet, Console, Panel, and Enclosure Wiring, Internal:
      1) New Cabinets, Consoles, Panels, and Enclosures:
         a) Wire and cable inside cabinets, consoles, panels, and enclosures shall have designators as specified in Section XXXXX, Process Control Systems General Provisions.
6. Modified Cabinets, Consoles, Panels, and Enclosures:
   a. New or rerouted wire or cable in existing cabinets, consoles, panels, and enclosures shall be labeled as shown on the Drawings or be assigned a ten-character designator equivalent to field wire designator.

H. Terminal Strip Labeling:
1. Label panel side of terminal to match panel wire number.

2. Label field side of terminal to match field wire number. Terminal number shall not include the Contract number.

I. Generator System Warning Signs:
   1. Provide warning signs for generator systems as required by NEC.
   2. Install generator location warning sign on or immediately adjacent to service equipment, or to "normal" source disconnecting means when generator is located out of sight of service equipment or disconnecting means.
   3. Install generator grounding warning sign on enclosure or immediately adjacent to point where generator neutral is connected to grounding electrode system if connection is made remote from generator.

END OF SECTION

THIS PAGE INTENTIONALLY LEFT BLANK

SECTION 16121

INSTRUMENTATION AND COMMUNICATION CABLE

PART 1 – GENERAL

1.1 DESCRIPTION

A. Scope:
   1. CONTRACTOR shall provide all labor, materials, equipment, and incidentals shown, specified, and required to furnish and install instrumentation and communication cables.
   2. Types of cables include the following:
      a. Shielded instrumentation cables.
      b. Telephone cables.
      c. Data communication cables.

B. Related Sections:
   1. Section 16131, Rigid and Flexible Conduits.
   2. Section 16075, Identification for Electrical Systems.

1.2 TERMINOLOGY

A. The following words or terms are not defined but, when used in this Section, have the following meaning:
   1. "CPE" means chlorinated polyethylene.
   2. "FEP" means fluorinated ethylene-propylene.
   3. "XLPE" means cross-linked polyethylene.

1.3 REFERENCES

A. Standards referenced in this Section are:
   1. ASTM A510, Specification for General Requirements for Wire Rods and Coarse Round Wire, Carbon Steel.
   2. ASTM B633, Specification for Electrodeposited Coatings of Zinc on Iron and Steel.
   3. ANSI/TIA/EIA-568, Commercial Building Telecommunications Cabling (requirements and restrictions of Technical Service Bulletins (TSBs) apply.)
   4. TIA/EIA-485, Electrical Characteristics of Generators and Receivers for Use in Balanced Digital Multipoint Systems (known as RS-485).
   5. UL 13, Power-Limited Circuit Cables.
   6. UL 1581, Electrical Wires, Cables and Flexible Cords.
   7. UL VW-1, Vertical Wire Flame Test.
   8. UL 910, Safety Test for Flame-Propagation and Smoke-Density Values for Electrical and Optical-Fiber Cables Used in Spaces Transporting Environmental Air

1.4 QUALITY ASSURANCE

A. Regulatory Requirements:
   1. NEC 725, Class 1, Class 2, and Class 3 Remote-Control, Signaling and Power-Limited Circuits.
   2. NEC 727, Instrumentation Tray Cable.

3. NEC 800, Communications Circuits.

1.5 SUBMITTALS

A. Action Submittals: Submit the following:
   1. Product Data: Manufacturer's technical information for instrumentation cables and communications cables proposed.

B. Informational Submittals: Submit the following:
   1. Field Quality Control Submittals: Written report of results of field quality control testing specified in this Section.

PART 2 – PRODUCTS

2.1 MATERIALS

A. General:
   1. Cables shall bear the UL label.

B. Single Shielded Pair Instrument Cables:
   1. Manufacturers: Provide products of one of the following:
      a. Belden Company.
      b. Okonite Company.
      c. Dekoron Wire and Cable Company.
      d. Or equal.
   2. Tinned copper, TFN-insulated stranded conductors, twisted pair, with 100% coverage aluminum foil-polyester tape outer shield , with minimum stranded tinned no. 20 AWG copper drain wire and overall PVC jacket. Cables shall be NEC Type PLTC tray cable rated for not less than 300 volts and complying with UL 1581.
   3. Cables shall be comparable to Belden Cable Company No. 1030 series cable.

C. Multi-Paired Shielded Instrument Cables:
   1. Manufacturers: Provide products of one of the following:
      a. Belden Company.
      b. Okonite Company.
      c. Dekoron Wire and Cable Company.
      d. Or equal.
   2. Tinned copper, TFN-insulated stranded conductors, twisted pairs with 100% coverage aluminum foil-polyester tape on each individual pair and thee outer shield, with minimum stranded tinned no. 22 AWG for each pair and minimum outer shield drain wire of no, 20 AWG copper drain wire, and overall PVC jacket. Cables shall be NEC Type PLTC tray cable rated for not less than 300 volts and complying with UL 1581.

D. Multi-Conductor Shielded Instrument Cables:
   1. Manufacturers: Provide products of one of the following:
      a. Belden Company.
      b. Okonite Company.
      c. Dekoron Wire and Cable Company.
      d. Or equal.

2. Tinned copper, XLPE-insulated stranded conductors, not less than no. 16 AWG, stranded tinned no. 18 AWG copper drain wire, with overall 100 percent foil shield and overall PVC or CPE jacket. Rated for not less than 600 volts.

E. Multi-Conductor Shielded High-Temperature Instrument Cables:
1. Manufacturers: Provide products of one of the following:
   a. Belden Company.
   b. Okonite Company.
   c. Dekoron Wire and Cable Company.
   d. Or equal.
2. Silver-plated copper, extruded Teflon insulation, stranded conductors, not less than no. 16 AWG, with overall 90 percent silver-plated copper braid shield and overall Teflon tape-wrapped jacket. Rated for not less than 600 volts and complying with UL VW-1.

F. Multi-Conductor Shielded Plenum-Rated Instrument Cables:
1. Manufacturers: Provide products of one of the following:
   a. Belden Company.
   b. Okonite Company.
   c. Dekoron Wire and Cable Company.
   d. Or equal.
2. Tinned copper, FEP insulation, stranded conductors, not less than no. 16 AWG, with overall foil shield plus 85 percent tinned copper braid shield and overall FEP jacket (non-conduit). Rated for 600 volts and complying with UL 910.

G. Multi-Conductor Telephone Cables:
1. Manufacturers: Provide products of one of the following:
   a. General Cable Company.
   b. Belden
   c. Or equal.
2. Trunk and Extension Lines, Underground Installation:
   a. Solid annealed copper, conductors, no. 24 AWG, polyethylene-insulated, with the number of twisted pairs as shown on the Drawings.
   b. Assemble cable in groups of 25 pairs, filled with sealing compound and tape-wrapped with overlap.
   c. Cable shall include aluminum shield, water blocking compound, and polyethylene jacket over all.
   d. Rated for not less than 300 volts.
3. Extension-Riser Lines, Indoor Insulation:
   a. Solid annealed copper, conductors, no. 24 AWG, PVC- or polyethylene-insulated, with the number of pairs as shown on the Drawings.
   b. Cable core shall be tape-wrapped with overlap and include aluminum shield and PVC jacket.
   c. Rated for not less than 300 volts.
4. Phones:
   a. Solid copper, no. 24 AWG, four conductor, PVC- or polyethylene-insulated, and PVC jacket.
   b. Rated not less than 300 volts.

H. Cable Terminals:
1. Manufacturers: Provide products of one of the following:
   a. T&B Sta-Kon.

b. Burndy Insulug.
c. Or equal.

2. Fork type copper compression terminals with nylon insulation for termination of cable at terminal blocks.

I. Horizontal Unshielded Twisted Pair (UTP) Cables:
1. Horizontal cabling is cabling between and including the telecommunications outlet/connector and patch panel or termination block.
2. Manufacturers: Provide products of one of the following:
   a. Bertek.
   b. Belden.
   c. Mohawk
   d. Or equal.
3. Cables shall consist of no. 24 AWG, polyolefin-insulated, solid copper conductors formed into four individually-twisted pairs and enclosed by PVC jacket.
4. Comply with ANSI/TIA/EIA-568, Part 10.2.
5. Riser-rated where installed in conduit. Other installations shall be plenum-rated.
6. Rated for Category 6e use.
7. Cable shall be capable of passing UL 1666 vertical riser flame test.

J. Patch Cords:
1. Patch cords are used for connecting patch panel to hub, or wall jack to equipment.
2. Manufacturer: Provide products of one of the following:
   a. Bertek.
   b. Belden.
   c. Mohawk
   d. Or equal.
3. Cables shall consist of no. 24 AWG, thermoplastic-insulated, stranded conductors formed into four individually-twisted pairs and enclosed by thermoplastic jacket.
4. Cables shall be riser-rated.
5. Rated for Category 6 use.
6. Cables shall incorporate integral strain relief into the connector at each end. Connectors shall be RJ45 plugs.
7. Provide the following patch cords:
   a. One 10-foot cable per wall jack installed.
   b. One 3-foot cable per every two wall jacks installed.
   c. One 5 foot cable per every two wall jacks installed.

K. Connecting Hardware for Unshielded Twisted Pair (UTP) Cables:
1. Hardware used to terminate UTP cable shall comply with ANSI/TIA/EIA-568, Part 10.4.
2. Connecting hardware shall be compatible with wiring specified in the Contract Documents.
3. Rated for Category 6e use.
4. Connecting hardware shall utilize 110-type terminal blocks to coordinate with patch panels and termination blocks specified the Contract Documents.
5. Telecommunications Outlets/Connectors:
   a. Manufacturers: Provide products of one of the following:
      1) Hubbell.
      2) Or equal.
   b. Outlets and connectors shall utilize RJ45 (eight-pin modular) plug/receptacle configuration.

c. Outlets and connectors shall utilize T568B pin/pair assignments, and be coordinated with wire type (solid or stranded conductor).
d. Outlets shall be flush-mount type or surface-mount type, as indicated on the Drawings.

L. Patch Panels:
1. Manufacturers: Provide products of one of the following:
a. Black Box.
b. Or equal.
2. Patch panels shall utilize RJ45 (eight-pin modular) plug/receptacle configuration, and utilize T568B pin/pair assignments for receptacles.
3. Coordinate patch panel terminations with wire type (solid or stranded conductor).
4. Patch panels shall be wall-mount type or rack-mount type, as indicated on the Drawings.
5. Listed as Category 6.
6. Provide quantity of ports not less than the quantity of wall jacks installed in the building/area served, plus 50 percent additional as spares.

M. Cable Support Hardware:
1. Wire Basket:
a. Materials and Finishes:
1) Yellow Zinc Dichromate: Straight sections shall be steel complying with ASTM A510, and shall be electro-plated yellow zinc dichromate in accordance with ASTM B633 Type SC2.
b. Straight section longitudinal wires shall be straight, without bends.
c. Wire basket runway shall be made of high-strength steel wires and formed into a standard two-inch by four-inch wire mesh pattern with intersecting wires welded together. Wire ends along runway sides (flanges) shall be rounded.
d. Wire basket sizes shall comply with the following:
1) Straight sections shall be furnished in standard lengths of nine feet ten inches.
2) Wire basket shall have one-inch usable loading depth by (--1--) inches wide.
3) Wire basket shall have two-inch usable loading depth by (--1--) inches wide.
4) Wire basket shall have four-inch usable loading depth by (--1--) inches wide.
a) Fittings shall be field-formed as required.
b) Splicing assemblies shall be bolted type with serrated flange locknuts. Hardware shall be either yellow zinc dichromate in accordance with ASTM B633 Type SC2, or AISI Type 304 stainless steel.
c) Wire basket runway supports shall be center-support hangers, trapeze hangers, or wall brackets, manufactured by Cooper B-Line, or equal.
d) Trapeze hangers or center-support hangers shall be supported by 1/4-inch or 3/8-inch diameter rods.
e) Provide special accessories as required to protect, support, and install wire basket runway system.
2. Conduit:
a. Where conduit is shown or indicated on the Drawings, comply with Section 16131, Rigid and Flexible Conduits.

N. Modbus Cables (RS-232):
1. Products and Manufacturers:
a. Non-Plenum-Rated Modbus Cables: Provide one of the following:
1) Belden 8777.
2) Or equal.

b. Plenum-Rated Modbus Cables: Provide one of the following:
   1) Belden 88777.
   2) Or equal.

2. Cables shall consist of six tinned copper, no. 22 AWG, stranded conductors, polypropylene-insulated, twisted into three pairs, each pair individually shielded with 100-percent aluminum-polyester shield, one no. 22 AWG, stranded, tinned copper drain wire per pair, covered with an overall PVC jacket.
3. Where plenum rating is required, cable insulation and jacket shall be FEP in lieu of insulation and jacket materials otherwise specified in this Section for Modbus cables.
4. When portion of cable run is not contained in conduit or appropriate enclosure, cable shall be plenum- or riser-listed and marked in accordance with NEC 800.

O. Modbus-Plus Cables:
1. Products and Manufacturers: Provide one of the following:
   a. Non-Plenum-Rated Modbus-Plus Cables: Provide one of the following:
      1) Modicon 490-NAA-271-0x
      2) Belden 9842.
      3) Or equal.
   b. Plenum-Rated Modbus-Plus Cables: Provide one of the following:
      1) Belden 82842.
      2) Or equal.
2. Cables shall consist of two tinned copper no. 24 AWG, stranded conductors, polyethylene-insulated, and twisted into a single pair, with 100-percent aluminum-polyester shield, 90-percent tinned copper braided shield, no.24 AWG, tinned copper drain wire and overall PVC jacket.
3. When plenum rating is required, cable insulation shall be FEP and jacket shall be fluorocopolymer, in lieu of insulation and jacket materials otherwise specified in this Section for Modbus-plus cables.
4. When portion of cable run is not in conduit or appropriate enclosure, cables shall be plenum- or riser-listed and marked in accordance with NEC 800.

P. Allen Bradley DH (Blue Hose) Cables:
1. Products and Manufacturers: Provide one of the following:
   a. Belden 3072F.
   b. Or equal.
2. Cables shall consist of two tinned copper, no. 18 AWG, stranded conductors, polyolefin-insulated and twisted into a single pair, with 100-percent aluminum-polyester shield, 55-percent tinned copper braided shield, no. 20 AWG stranded tinned copper drain wire, and overall PVC jacket.
3. When plenum rating is required, cable insulation and jacket shall be FEP in lieu of insulation and jacket materials otherwise specified in this Section for Allen Bradley DH (blue hose) cables.
4. When portion of cable run is not contained in conduit or appropriate enclosure, cables shall be plenum- or riser-listed and marked in accordance with NEC 800.

Q. ControlNet Cables:
1. Products and Manufacturers:
   a. Non-Plenum-Rated ControlNet Cables: Provide one of the following:
      1) Allen-Bradley 1786-RG6.
      2) Belden 3092A.
      3) Or equal.

b. Plenum-Rated ControlNet Cables: Provide one of the following:
   1) Belden 3093A.
   2) Or equal.

2. Cables shall be RG-6/U-type coaxial cables.
3. Cables shall consist of no. 18 AWG solid, bare copper covered steel conductor, foam polyethylene-insulated, with four-layer shield: 100-percent aluminum-polyester, 60-percent tinned copper braided, 100-percent aluminum-polyester, 40-percent tinned copper braided, with overall PVC jacket.
4. When plenum rating is required, cable insulation shall be foam FEP and jacket shall be fluoro-copolymer, in lieu of insulation and jacket materials otherwise specified in this Section for ControlNet cables.
5. When portion of cable run is not contained in conduit or appropriate enclosure, cables shall be plenum- or riser-listed and marked in accordance with NEC 800.

R. Devicenet (Thick) Cables:
1. Cables designated as "thick" and "NEC Type TC" shall be rated for 600 volt AC, Class 1, 75°C or higher operation, and have a nominal diameter of 0.50 inch. The cable assembly shall consist of two No. 15 A WG or No. 16 A WG power conductors with PVC/nylon insulation, two No. 18 A WG data conductors with FR polypropylene (FR PP) insulation, one No. 16 AWG drain wire.
   a. Products and manufacturers: Provide one of the following:
      1) Belden 7896A or 7897A
      2) Or equal
2. Cables designated as "thick" and "NEC Type PLTC" shall be Type PLTC rated for Class 2, 75°C or higher operation and have a nominal diameter of 0.50 inch. The cable assembly shall consist of two No. 15 AWG power conductors with PVC insulation, two No. 18 AWG data conductors with FPE insulation, one No. 18 AWG drain wire.
   a. Products and manufacturers: Provide one of the following:
      1) Belden 3082A, 3082F, or 3083A
      2) Or equal
3. When portion of cable run is not contained in conduit or appropriate enclosure, cables shall be plenum- or riser-listed and marked in accordance with NEC 800.

S. Devicenet (Thin) Cables:
1. Products and Manufacturers: Provide one of the following:
   a. Belden 3084A, 3084F, or 3087A.
   b. Or equal.
2. Cables shall consist of two tinned copper, no. 22 AWG, stranded power conductors, PVC-insulated with 100-percent aluminum-polyester shield, two tinned copper no. 24 AWG stranded data conductors, foam polyethylene-insulated, and twisted into single pair, with 100-percent aluminum-polyester shield, with no. 22 AWG stranded tinned copper drain wire. Cables shall be covered by overall 65-percent tinned copper braided shield, and sunlight- and oil-resistant overall PVC jacket.
3. When portion of cable run is not contained in conduit or appropriate enclosure, cables shall be plenum- or riser-listed and marked in accordance with NEC 800.

T. Profibus DP Cables:
1. Products and Manufacturers: Provide one of the following:
   a. Belden 3079A.
   b. Or equal.

2. Cables shall consist of two solid bare, no. 22 AWG, copper conductors twisted into a single pair, with flame-retardant foam polyethelene insulation, 100-percent aluminum-polyester shield, 65-percent tinned copper braid shield, and overall PVC jacket.
3. When portion of cable run is not contained in conduit or appropriate enclosure, cables shall be plenum- or riser-listed and marked in accordance with NEC 800.

U. Profibus PA Cables:
1. Products and Manufacturers: Provide one of the following:
   a. Belden 3076F.
   b. Or equal.
2. Cables shall consist of two tinned copper stranded, no. 18 AWG, conductors, polyolefin-insulated, and twisted into a single pair, 100-percent aluminum-polyester shield, no. 20 AWG tinned copper drain wire, and overall PVC jacket.
3. When portion of cable run is not contained in conduit or appropriate enclosure, cables shall be plenum- or riser-listed and marked in accordance with NEC 800.

V. RS-485 Half Duplex Cables:
1. Products and Manufacturers:
   a. Non-Plenum-Rated RS-485 Half Duplex Cables: Provide one of the following:
      1) Belden 9841.
      2) Or equal.
   b. Plenum-Rated RS-485 Half Duplex Cables: Provide one of the following:
      1) Belden 89841.
      2) Or equal.
2. Cables shall consist of two tinned copper stranded, no. 24 AWG, conductors, polyethelene-insulated and twisted into a single pair, 100-percent aluminum-polyester shield, 90-percent tinned copper braided shield, no. 24 AWG tinned copper drain wire, and overall PVC jacket.
3. When plenum rating is required, cables insulation shall be foam FEP and jacket shall be low-smoke PVC, in lieu of insulation and jacket materials specified in this Section for RS-485 half-duplex cables.
4. Cables shall comply with TIA/EIA RS-485.
5. When portion of cable run is not contained in conduit or appropriate enclosure, cables shall be plenum- or riser-listed and marked in accordance with NEC 800.

W. RS-485 Full Duplex Cables:
1. Products and Manufacturers: Provide one of the following:
   a. Belden 3105A through 3109A.
   b. Or equal.
2. Cables shall be unshielded, twisted pairs rated for 300 volt AC, at least 2.7 amperes maximum current, UL listed, rated for 60°C or higher operation, and be NEC Types PL TC and CM. Nominal attenuation at 1 MHz shall be 0.5 dB/100 feet.
3. Conductors shall be concentric-lay, tinned-copper with the number of pairs and sizes as specified on the Drawings.
4. The outer shield shall be an aluminum foil-polyester tape shield providing 100% shielding covered by a tinned-copper braid shield that provides at least 90% coverage. The outer shield drain wire shall be tinned-copper and be at least No. 22 AWG.
5. The conductor insulation shall be foam high density polyethylene (FHDPE) and the outer jacket shall be PVC. The cable shall be capable of passing the UL 1581 vertical tray flame and 720-hour sunlight resistance tests.

6. The cable shall have the following markings at least every 2 feet: manufacturer's name, cable ratings and type, and number of pairs.
7. When plenum rating is required, cables insulation shall be foam FEP and jacket shall be low-smoke PVC, in lieu of insulation and jacket materials otherwise specified in this Section for RS-485 full duplex cables.
8. When portion of cable run is not contained in conduit or appropriate enclosure, cables shall be plenum- or riser-listed and marked in accordance with NEC 800.

PART 3 – EXECUTION

3.1 INSPECTION

A. Examine conditions under which materials and equipment will be installed and notify ENGINEER in writing of conditions detrimental to proper and timely completion of the Work. Do not proceed with the Work until unsatisfactory conditions are corrected.

3.2 INSTALLATION

A. General:
   1. Install cables complete with proper terminations at both ends.
   2. Install in conduit separate from power cables, unless shown or indicated otherwise.
   3. Ground shield on shielded cables at one end only and as recommended by instrument manufacturer.
   4. Identify conductors in accordance with Section 16075, Identification for Electrical Systems.
   5. Install and terminate Supplier-furnished cable in accordance with equipment manufacturer requirements and cable manufacturer's recommendations.
   6. Install in accordance with Laws and Regulations, including NEC.

3.3 FIELD QUALITY CONTROL

A. Site Tests:
   1. Test shielded instrumentation cable shields with ohmmeter for continuity along full length of cables, and for shield continuity to ground.
   2. Connect shielded instrumentation cables to calibrated 4 to 20 mA dc signal transmitter and receiver. Test at 4 and 20 mA transmitter settings.
   3. Replace with new cables the full length of cables that fail test.
   4. Test equipment shall be provided by CONTRACTOR.
   5. For testing of communications cables, test equipment used shall comply with the following:
      a. Equipment shall consist of a "master" and a "remote" unit.
      b. Test of all aspects of cables shall be automatic and initiated with a single command. Test over entire frequency range. Test unit shall be capable of accepting cable identification tag for reporting. Test unit shall return "pass/fail" status for cables and, if "fail", shall indicate reason for failure.
      c. Test unit shall be capable of storing all test results internally and printing the results later.
      d. For unshielded twisted pair cables, test unit shall be specifically designed and manufactured to certify cabling relative to Category 6 compliant.

END OF SECTION

THIS PAGE INTENTIONALLY LEFT BLANK

SECTION 16122

LOW-VOLTAGE ELECTRICAL POWER CONDUCTORS AND CABLES

PART 1 GENERAL

1.1 DESCRIPTION

A. Scope:
1. CONTRACTOR shall provide all labor, materials, equipment, and incidentals shown, specified, and required to furnish and install low-voltage conductors and cabling.
2. Types of cabling required include:
   a. Insulated cable for installation in raceways.
   b. Cable for installation in cable trays.
   c. Direct-burial cable.
   d. Direct-burial cable duct.

B. Related Sections:
1. Section 16075, Identification for Electrical Systems.
2. Section 02200, Earthwork.

C. Work Included But Specified Elsewhere:
1. Perform excavation and filling for direct-burial cable in accordance with Section 02200, Earthwork.

1.2 REFERENCES

A. Standards referenced in this Section are:
1. ANSI/NETA ATS, Acceptance Testing Specifications for Electrical Power Equipment and Systems.
2. ASTM B3, Specification for Soft or Annealed Copper Wire.
3. ASTM B8, Specification for Concentric-Lay-Stranded Copper Conductors, Hard, Medium-Hard or Soft.
4. ASTM D3485, Specification for Smooth-Wall Coilable Polyethylene (PE) Conduit (Duct) for Preassembled Wire and Cable.
5. ASTM F2160, Solid Wall High Density Polyethylene (HDPE) Conduit Based on Controlled Outside Diameter (OD).
6. NEMA TC 7, Smooth Wall Coilable Electrical Polyethylene Conduit.
7. UL 44, Thermoset-Insulated Wires and Cables.
8. UL 1277, Electrical Power and Control Tray Cables with Optional Optical-Fiber Members.

1.3 QUALITY ASSURANCE

A. Regulatory Requirements: Comply with the following:
1. NEC Article 300, Wiring Methods.
2. NEC Article 310, Conductors for General Wiring.

1.4 SUBMITTALS

A. Action Submittals: Submit the following:
   1. Product Data:
      a. Manufacturer's literature, specifications, and engineering data for low volt insulated cable proposed for use.

B. Informational Submittals: Submit the following:
   1. Field Quality Control Submittals:
      a. Written results of field insulation resistance tests.

PART 2 – PRODUCTS

2.1 MATERIALS

A. Insulated Cable In Raceways:
   1. Application: Use for circuits located indoors and outdoors.
   2. Manufacturers: Provide products of one of the following:
      a. Southwire.
      b. The Okonite Company.
      c. American Insulated Wire
      d. General Cable
      e. Or equal.
   3. Material: Single conductor copper cable complying with ASTM B3 and ASTM B8. All wiring, except for wiring within fluorescent lighting fixtures and Type NM applications, shall be single-conductor and have PVC insulation rated such as Type THHN (90°C), XHHW(90°C dry/75°C wet), XHHW-2(90°C), or Type THWN (75°C) unless indicated *Rev 6* otherwise on the Drawings. The PVC insulation and its overall nylon jacket shall be gasoline and oil resistant per UL 83, UL 1063 and UL VW-1.
      a. Power Cables shall be Type TC and suitable for 90°C dry/75°C wet.
   4. Wire Sizes: Not smaller than No. 12 AWG for power and lighting and No. 14 AWG for 120-volt control circuits.
   5. Stranding: 600-volt cable shall be stranded per;
      a. All wire No. 8 AWG and larger shall be stranded. Wire No. 10 AWG and smaller installed for motor leads and control wiring shall be stranded.
      b. Cables shall have standard stranding for sizes as follows: 7 strands up through No. 2; 19 strands from No. 1 through No. *410;* and 37 strands from 250 kcmil through 500 kcmil unless noted otherwise.
      c. Sizes No. 14 AWG through No. 10 AWG shall be solid or concentric Class C compressed stranded per ASTM B-3, ASTM B-8 and UL 83. Sizes No. 8 AWG through No. 2 AWG shall be concentric Class C compressed stranded per ASTM B-8, UL 83 and UL I063. Sizes No. 1 AWG through 750 kcmil shall be concentric Class B compressed stranded per ASTM B-8, UL 83 and UL 1063.

B. Fire-Rated Cable:
   1. Application:

a. Use as required to comply with NEC Article 708 and as shown or indicated on the Drawings.

2. Manufacturers: Provide products of one of the following:
   a. Tyco/Thermal Control VITALink 2000 Fire Rated Cable.
   b. Or equal.
3. Material: Single nickel-clad copper conductor with proprietary thermoset ceramifiable layer and thermoset low-smoke zero halogen covering insulation. Cable shall be rated for 90 degrees C in dry locations and 75 degrees C in wet locations. Cable shall comply with UL1709 and shall be suitable for continuous exposure temperature of 670 degrees C and maximum exposure temperature of 1,065 degrees C for at least 60 minutes. Cable shall be UL-labeled.
4. Thermal Barrier: Inorganic layer.
5. Binder Tape: Helically-applied.
6. Jacket: Black low-smoke zero halogen polyolefin.
7. Splicing: Manufacturer's recommended method.
8. Wire Sizes: Not smaller than No. 12 AWG and not larger than 500 KCMIL.
9. Stranding: 600-volt cable shall be stranded.

C. Cable for Installation in Trays:
   1. Manufacturers: Provide products of one of the following:
      a. Southwire.
      b. The Okonite Company.
      c. Prysmian Cables & Systems.
      d. General Cable.
      e. Or equal.
   2. Material: Factory-assembled single- or multi-conductor control, signal, or power cable that bears UL label Type TC and are specifically approved for installation in cable trays. Overall jacket shall be sunlight-resistant PVC. Cable shall be rated for 90 degrees C wet or dry, complying with UL 44 and UL 1277.

D. Direct-Burial Cable:
   1. Manufacturers: Provide products of one of the following:
      a. The Okonite Company.
      b. Prysmian Cables & Systems.
      c. American Insulated Wire.
      d. Southwire.
      e. Or equal.
   2. Material: Single- or multi-conductor, stranded copper conductors, 60 mils butadiene styrene or ethylene propylene insulation, overall jacket of neoprene or PVC complying with UL 44 and UL 1277. Cable shall be UL-labeled.

E. Direct-Burial Cable Duct:
   1. Manufacturers: Provide products of one of the following:
      a. Cablecon by Paige Electric.
      b. Tamaqua Ducted System by Draka Cableteq USA.
      c. Or equal.
   2. Material: Multi-conductor stranded copper cables; 600-volt cross-linked polyethylene insulated, factory-assembled in coilable, medium-density polyethylene duct suitable for

direct burial in earth for operation at maximum conductor temperature of 90 degrees C complying with UL 44, UL 1277, NEMA TC 7, ASTM D3485, and ASTM F2160. Cable shall be UL-labeled.

F. Cable Connectors, Solderless Type:
   1. Products and Manufacturers: Provide products of one of the following:
      a. T&B Sta Kon.
      b. Burndy Hylug.
      c. Or equal.
   2. Conductors shall be thoroughly cleaned before connectors are installed. Solderless connectors shall be used exclusively except for fire alarm systems.
   3. For wire sizes No. 4 AWG and above, use either compression type or bolted type with silver-plated contact faces.
   4. For wire sizes up to and including No. 6 AWG, use compression type. Alarm and control wire shall be terminated using forked type connectors at terminal boards.
   5. For wire sizes No. 250 KCMIL and larger, use connectors with at least two cable clamping elements or compression indents and provision for at least two bolts for joining to apparatus terminal.
   6. Properly size connectors, to fit fastening device and wire size, under strict accordance with the manufacturer's instructions shall be installed. Connectors shall be rated for 90 degree C, 600 volts.
   7. Aluminum connectors shall be factory supplied with an appropriate amount of aluminum joint compound inside the connector.

G. Cable Splices:
   1. Products and Manufacturers:
      a. Compression-Type Splices: Provide one of the following:
         1) Burndy Hylink.
         2) T&B Color-Keyed Compression Connectors.
         3) Or equal.
      b. Spring Connectors: Provide one of the following:
         1) Buchanan B-Cap.
         2) T&B Wire Connector.
         3) Or equal.
   2. Splices and taps shall generally be made in junction boxes or wiring gutters.
   3. For wire sizes No. 8 AWG and larger, splices shall be made up with compression type copper splice fittings. Splices shall be taped and covered with materials recommended by cable manufacturer to provide insulation equal to that on conductors.
   4. For wire sizes No. 10 AWG and smaller, splices may be made up with pre-insulated spring connectors.
   5. For wet locations, splices shall be waterproof. Compression type splices shall be waterproofed by sealant-filled, thick wall, heat shrinkable, thermosetting tubing or by pouring thermosetting resin into mold that surrounds the joined conductor. Spring connector splices shall be waterproofed with sealant filler.
   6. Splices shall be suitably sized for cable, rated 90 degrees C, and 600 volts.

H. Wire and Cable Markers:

1. Provide wire and cable markers in accordance with Section 16075, Identification for Electrical Systems.

2.2 SOURCE QUALITY CONTROL

A. Factory Tests:
   1. Factory-test wire and cable in accordance with UL standards

PART 3 – EXECUTION

3.1 INSTALLATION

A. Install cables complete with proper terminations at both ends. Check and correct for proper phase sequence and proper motor rotation.

B. Pulling:
   1. Use insulating types of pulling compounds containing no mineral oil.
   2. Pulling tension shall be within limits recommended by wire and cable manufacturer.
   3. Use dynamometer where mechanical means are used.
   4. Cut off section subject to mechanical means.

C. Bending Radius: Bending radius of any insulated wire or cable shall not be less than the minimum recommended by the manufacturer.

D. Slack: Provide maximum slack at all terminal points.

E. Splices:
   1. Where possible, install cable continuous, without splice, from termination to termination.
   2. Where required, splice as shown and also where required for cable installation. Splices below grade, in manholes, handholes, and wet locations shall be waterproof.
   3. Splices are not allowed in conduits.

F. Identification:
   1. Identify conductors in accordance with Section 16075, Identification for Electrical Systems.
   2. Identify power conductors by circuit number and phase at each terminal or splice location.
   3. Identify control and status wiring using numeral tagging system.

G. Color-code power cables as follows:
   1. Grounded Conductor; All grounded (neutral) conductors No. 2 AWG and smaller shall have white insulation. Grounded conductors larger than No. 2 AWG shall be identified at all terminal or junction points by wrapping with white, self-adhesive, vinyl plastic electrical tape, Scotch No. 35. Sufficient length of cable nearest terminal or junction points shall be taped so that the neutral conductor shall be easily identifiable when covers of lighting panels, transformers, junction boxes, safety switches, etc., are removed.

2. Grounding Conductor; any insulated conductor intended solely for grounding purposes shall be identified by a continuous green color or a continuous green color with one or more yellow stripes.
3. Control Circuit Conductors; Ungrounded single conductor control circuit wiring may be a combination of any colors other than white, gray, or green. The grounded control circuit conductor shall be identified in accordance with the Grounded Conductor paragraph above.
4. Colors: For each voltage system, the color scheme in the below table shall be used;

System	Conductor	Color
All Systems	Equipment Grounding	Bare or Green
240/120 Volts Single-Phase, Three-Wire	Grounded Neutral One Hot Leg Other Hot Leg	White Black Red
208Y/120 Volts Three-Phase, Four-Wire	Grounded Neutral Phase A Phase B Phase C	White Black Red Blue
480 V, 3-Phase	Phase A Phase B Phase C	Yellow Orange Brown
480Y/277 Volts Three-Phase, Four-Wire	Grounded Neutral Phase A Phase B Phase C	White Yellow Orange Brown

3.2 FIELD QUALITY CONTROL

A. Site Tests:
1. Test each electrical circuit after permanent cables are in place, to demonstrate that circuit and equipment are connected properly and will perform satisfactorily, free from improper grounds and short circuits.
2. Individually test 600-volt cable mechanical connections after installation and before they are put in service, with calibrated torque wrench. Values shall be in accordance with manufacturer's recommendations.
3. Individually test 600-volt cables for insulation resistance between phases and from each phase to ground. Test after cables are installed and before they are put in service, with Megger for one minute at voltage rating recommended by cable manufacturer or in accordance with ANSI/NETA ATS recommendations.
4. Insulation resistance for each conductor shall not be less than value recommended by cable manufacturer. Cables not meeting recommended value or that fail when tested under full load conditions shall be replaced with a new cable for full length.

END OF SECTION

THIS PAGE INTENTIONALLY LEFT BLANK

SECTION 16131

RIGID AND FLEXIBLE CONDUITS

PART 1 – GENERAL

1.1 DESCRIPTION

A. Scope:
   1. CONTRACTOR shall provide all labor, materials, equipment, and incidentals shown, specified, and required to furnish and install conduit and fittings to form complete, coordinated and grounded raceway systems.
   2. When specific, detailed conduit routings for various systems within buildings and other areas will be shown on the Drawings and will be stated as so. Otherwise, CONTRACTOR shall establish routings based on single-line, riser, and interconnection diagrams and other information on the Drawings. CONTRACTOR shall provide for the proper installation of conduits in each system.
   3. Conduit types and the installation methods shall comply with the following, unless otherwise shown or indicated in the Contract Documents or drawings:
      a. Use steel intermediate metallic conduit for exposed indoor conduit runs in non-corrosive areas.
      b. Use PVC-coated rigid steel for exposed interior or exterior conduit runs in corrosive locations as specified on the drawings.
      c. Use Schedule 40 PVC, or Schedule 80 PVC, or steel conduit for concrete-encased duct bank runs as specified and shown on Drawings.
      d. Use steel, or Schedule 80 PVC, or Schedule 40 PVC conduit for conduit runs embedded in structural concrete slabs as specified and shown on Drawings.
      e. Conduit beneath roadways shall be rigid galvanized steel.
      f. Use steel conduit for plant monitoring and control (PMCS) systems, system control and data acquisition (SCADA) systems, and communication systems, regardless of the installation. Conduit shall be PVC-coated rigid steel in corrosive locations.
      g. Aluminum conduit shall not be provided or installed unless specifically identified on the drawings.
      h. Conduits sized 1-1/4 inches shall not be installed unless specified on the Drawings.

B. Coordination:
   1. Conduit runs shown are diagrammatic. Coordinate conduit installation with piping, ductwork, light fixtures, and other systems and equipment, and locate to avoid interferences.
   2. For conduits to be embedded in concrete slabs, confirm adequate slab thickness and coordinate location of conduits with placement of reinforcing steel, waterstops, expansion joints, and other features of the concrete slab.

C. Related Sections:
   1. Section (--1--).
   2. Section XXXXX, Flexible Paving.

3. Section 05501, Anchor Systems.
4. Section 16070, Hangers and Supports for Electrical Systems.
5. Section 16075, Identification for Electrical Systems.

1.2 REFERENCES

A. Standards referenced in this Section are:
1. ANSI C80.1, Standard for Rigid Electrical Steel Conduit (ERSC).
2. ANSI/NEMA FB1, Fittings, Cast Metal Boxes, and Conduit Bodies for Conduit, Electrical Metallic Tubing and Cable.
3. NEMA TC2, Electrical Polyvinyl Chloride (PVC) Conduit.
4. NEMA TC3, Polyvinyl Chloride (PVC) Fittings for Use with Rigid PVC Conduit and Tubing.
5. NEMA TC14, Reinforced Thermosetting Resin Conduit (RTRC) and Fittings.
6. UL 6, Electrical Rigid Metal Conduit – Steel.
7. UL 360, Liquid Tight Flexible Steel Conduit.
8. UL 514B, Conduit, Tubing, and Cable Fittings.
9. UL 651, Safety Schedule 40 and 80 Rigid PVC Conduit and Fittings.
10. UL 886, Outlet Boxes and Fittings for Use in Hazardous (Classified) Locations.
11. UL 1242, Electrical Intermediate Metal Conduit – Steel.

1.3 QUALITY ASSURANCE

A. Regulatory Requirements: Comply with the following:
1. NEC Article 342, Intermediate Metal Conduit
2. NEC Article 344, Rigid Metal Conduit.
3. NEC Article 350, Liquid-Tight Flexible Metal Conduit.
4. NEC Article 352, Rigid Nonmetallic Conduit.

1.4 SUBMITTALS

A. Action Submittals: Submit the following:
1. Shop Drawings:
   a. Assembly details of conduit racks and other conduit support systems.
   b. Layout drawings showing proposed routing of exposed conduits, conduits embedded in structural concrete, and conduits directly buried in the ground. Shop Drawings shall show locations of pull and junction boxes and penetrations in walls and floors. Shop Drawings of embedded conduits shall include cross-sections showing thickness of concrete slabs and locations of conduits relative to reinforcing steel, waterstops, and other features of the slab.
2. Product Data:
   a. Manufacturer's catalog cuts and product data for conduit, fittings, and appurtenances.
   b. Manufacturer's literature and technical information for flexible conduit and fittings proposed for use.

B. Informational Submittals: Submit the following:
1. Manufacturer's Instructions:

a. When requested by ENGINEER, provide copies of manufacturer's recommendations for handling and installing products.

2. Site Quality Control Submittals:
   a. When requested by ENGINEER, provide copies of results of specified Site quality control testing.

C. Closeout Submittals: Submit the following:
   1. Record Drawings:
      a. Show actual routing of exposed and concealed conduit runs in record documents in accordance with Section XXXXX, Project Record Documents.

PART 2 – PRODUCTS

2.1 MATERIALS

A. Rigid Steel Conduit, Elbows, and Couplings:
   1. Manufacturers: Provide products of one of the following:
      a. Allied Tube and Conduit.
      b. Wheatland Tube Company.
      c. Western Tube and Conduit Corporation.
      d. Or equal.
   2. Material: Rigid, heavy-wall, mild steel, hot-dip galvanized, smooth interior, tapered threads and carefully reamed ends; 3/4-inch NPS minimum size, unless otherwise specified.

B. PVC-coated Rigid Steel Conduit, Elbows, and Couplings:
   1. Manufacturers: Provide products of one of the following:
      a. Robroy Industries (Plasti-Bond).
      b. Perma-Cote Industries.
      c. OCAL, Inc.
      d. Or equal.
   2. Material: Rigid, heavy-wall, mild steel, hot-dip galvanized, smooth urethane interior coating, tapered threads, carefully reamed ends, 3/4-inch NPS minimum size with factory exterior coating of 40-mil thick PVC.
   3. Color: Color of coating shall be the same on all conduit and fittings.

C. Intermediate Metallic Conduit, Elbows, and Couplings:
   1. Manufacturers: Provide products of one of the following:
      a. Allied Tube and Conduit.
      b. Wheatland Tube Company.
      c. Western Tube and Conduit Corp.
      d. Or equal.
   2. Material: Rigid-type steel, work-hardened, hot-dip galvanized, smooth interior, tapered threads and carefully reamed ends; 3/4-inch NPS minimum size.
   3. Couplings: Same as for rigid steel conduit.
   4. Elbows: Factory formed of same material specification as for intermediate metallic conduit.

D. Aluminum Conduit, Elbows, and Couplings:
   1. Manufacturers: Provide products of one of the following:
      a. Allied Tube and Conduit.
      b. Wheatland Tube Company.
      c. Or equal.
   2. Material: Rigid, heavy-wall aluminum, smooth interior, tapered threads and carefully reamed ends; 3/4-inch NPS minimum size.
   3. Shall not be used unless specified.

E. Metallic Conduit Fittings, and Outlet Bodies:
   1. Manufacturers: Provide products of one of the following:
      a. Crouse-Hinds Company.
      b. Appleton Electric Company.
      c. Or equal.
   2. Material and Construction: Cast gray iron alloy, cast malleable iron or aluminum bodies and covers consistent with conduit material. Units shall be threaded type with five full threads. Materials shall comply with ANSI/NEMA FB1 and be listed by UL. Do not use "LB" fittings. Use type "LBD" fittings where use of fittings is unavoidable.
   3. Use: Conduits shall be gasketed and watertight in hazardous, wet, and corrosive locations.

F. PVC-coated Conduit Fittings, and Outlet Bodies:
   1. Manufacturers: Provide products of one of the following:
      a. Robroy Industries.
      b. Perma-Cote Industries.
      c. OCAL, Inc.
      d. Or equal.
   2. Material and Construction: Cast gray iron alloy, cast malleable iron bodies and covers with factory coating of 40-mil thick PVC exterior coating and smooth urethane interior coating. Units shall be threaded type with five full threads. Unit shall have an inside diameter not less than that of the correspond¬ing standard conduit size. Material shall comply with ANSI/NEMA FB1 and be listed by UL. Do not use "LB" fittings. Use type "LBD" fittings where use of fittings is unavoidable.
   3. Use: Provide PVC-coated or aluminum conduit fittings and outlet bodies in hazardous, wet, and corrosive locations. Fitting material shall be consistent with conduit material.

G. Non-metallic Conduit and Fittings:
   1. PVC Plastic Conduit:
      a. Manufacturers: Provide products of one of the following:
         1) Amoco Chemicals Corp.
         2) Carlon Electrical Products.
         3) Or equal.
      b. Material: Schedule 40 PVC, rated for 90 degrees C, complying with NEMA TC3 and UL 514B and 651.
      c. Fittings: Form elbows, bodies, terminations, expansions, and fasteners of same material and manufacturer as base conduit. Provide cement by same manufacturer as base conduit.

H. Flexible Conduit:
   1. Material: Steel, hot-dipped galvanized inside and outside. The flexible metal conduit shall be made in one continuous length of spirally-wound steel strip with uniform, interlocking convolutions. Material shall conform to UL 1.

I. Liquid-Tight Flexible Conduit:
   1. Material: Galvanized flexible metal conduit with an overall extruded thermoplastic jacket. The jacket shall be resistant to and seal out ultraviolet sunlight, water, oil, grease, alcohol, corrosive fumes and mineral acids. Conduit shall conform to UL 360. Minimum of 12 inches long.
   2. Products and Manufacturers: Provide one of the following:
      a. Anaconda Sealtite Type UA by Anamet Electrical, Inc.
      b. Liquatite Type L.A. by Electric Flex Company.
      c. Or equal.

J. Flexible Conduit Fittings:
   1. Material and Construction: Malleable iron with cadmium finish. Fittings shall adapt the conduit to standard threaded connections, shall have an inside diameter not less than that of the corresponding standard conduit size and shall be UL listed.
   2. Manufacturers: Provide products of one of the following:
      a. Crouse Hinds Company.
      b. Appleton Electric Company.
      c. Or equal.
   3. Use: Provide on flexible conduit in non-hazardous and Class 1, Division 2 hazardous areas.

K. Conduit Hubs:
   1. Manufacturers: Provide products one of the following.
      a. Myers Electrical Products Company.
      b. Or equal.
   2. Material: Threaded conduit hub, vibration-proof, weatherproof, with captive O-ring seal, zinc metal with insulated throat and bonding screw.
   3. Use: Provide for all conduit terminations to boxes, cabinets, and other enclosures in areas designated as wet locations.

L. PVC-coated Conduit Hubs:
   1. Manufacturers: Provide products one of the following:
      a. Robroy Industries.
      b. Perma-Cote Industries.
      c. OCAL, Inc.
      d. Or equal.
   2. Material: Threaded conduit hub, vibration-proof, weatherproof, with captive O-ring seal, zinc metal with insulated throat and bonding screw, and factory coating of 40-mil thick PVC and smooth urethane interior coating.
   3. Use: Provide for PVC-coated steel or aluminum conduit terminations to boxes, cabinets, and other enclosures in areas designated as corrosive location.

M. Conduit Bushings and Locknuts:

1. Manufacturers: Provide products one of the following:
   a. O-Z/Gedney.
   b. Appleton Electric Company.
   c. Or equal.
2. Insulated Bushings: Malleable iron body with plastic liner. Threaded type with steel clamping screw. Provide with bronze grounding lug, as required.
3. Locknuts: Steel for sizes 3/4-inch through two-inch diameter and malleable iron for sizes 2.5-inch through four-inch diameter.
4. Use: Provide for all conduit terminations to boxes, cabinets and other enclosures except threaded type in areas designated as dusty locations.

N. Thruwall Seals
1. For new construction through exterior subsurface walls and exterior concrete walls.
   a. Manufacturer: Provide¬ one of the following:
      1) Type WSK and WSCS by O-Z/Gedney.
      2) Or equal.
2. For new construction passing through concrete floors and floor slabs.
   a. Manufacturer: Provide¬ one of the following:
      1) Type FSK and FSCS floor seals by O-Z/Gedney.
      2) Or equal.
3. For conduits passing through new exterior masonry block walls or through core-drilled holes in existing exterior subsurface walls, exterior concrete walls, floor slabs, and roof slabs, and for conduits passing through existing interior concrete walls or floors and interior masonry block walls.
   a. Manufacturer: Provide¬ one of the following:
      1) Type CSMI sealing bushing at the inside of the structure and Type CSMC sealing bushing at the outside of the structure by O-Z/Gedney.
      2) Or equal.

2.2 ACCESSORIES

A. Fasteners: To the extent possible, fastener material shall be consistent with conduit material. For PVC-coated rigid steel conduit runs, fasteners shall have factory applied PVC coating or be stainless steel. Fasten raceway systems to supporting structures using the following:
1. To Wood: Wood screws.
2. To Hollow Masonry Units: Toggle bolts, in accordance with Section 05501, Anchor Systems.
3. To Brick Masonry: Expansion bolts by Price, or equal.
4. To Concrete: Anchors in accordance with Section 05501, Anchor Systems.
5. To Steel: Beam clamps in accordance with Section 16070, Hangers and Supports for Electrical Systems.

B. Duct Sealing Compound
1. Soft, fibrous, slightly tacky, non-hardening sealing compound.
2. Remains workable at all temperatures.
3. Manufacturer:
   a. Type DUX by O-Z/Gedney.
   b. Or equal.

2.3 IDENTIFICATION

A. Conduit Labels:
   1. Provide conduit labels in accordance with Section 16075, Identification for Electrical Systems.

B. Warning Tape:
   1. Provide warning tape in accordance with Section 16075, Identification for Electrical Systems.

PART 3 – EXECUTION

3.1 INSPECTION

A. Examine conditions under which the Work will be performed and notify ENGINEER in writing of conditions detrimental to proper and timely completion of the Work. Do not proceed with installation until unsatisfactory conditions are corrected.

B. Install in accordance with Laws and Regulations.

C. Supports:
   1. Rigidly support conduits by clamps, hangers, or Unistrut-type channels. Conduit supports and accessories shall be in accordance with Section 16070, Hangers and Supports for Electrical Systems.
   2. Support single conduits by means of one-hole pipe clamps in combination with one-screw back plates, to raise conduits from the support surface. Support multiple runs of conduits on trapeze type hangers.

D. Fastenings: Fasten raceway systems rigidly and neatly to supporting structures using specified materials.

E. Exposed Conduit:
   1. Install parallel or perpendicular to structural members or walls.
   2. Where possible, run in groups. Provide conduit racks of suitable width, length, and height, arranged to suit field conditions. Provide support every ten feet, minimum.
   3. Where a number of conduits are run together, the radii of any required bends shall be such that conduits are parallel and the installation will be neat in appearance.
   4. Install on structural members in protected locations.
   5. Locate clear of interferences.
   6. Conduits in no case shall be secured directly to other piping. Conduit parallel to or crossing uninsulated hot water or steam pipes must be separated from them by 12 inches if parallel or 6 inches if crossing. Where these lines are insulated, conduit parallel to or crossing them must clear the insulation surface by 2 inches. Conduit shall not be run

directly under cold water lines and shall be separated from them in other directions by at least 3 inches.

7. Install vertical runs plumb. Unsecured drop length shall not exceed 12 feet.

F. Underground Conduits:
   1. Install individual, underground conduits minimum of 36 inches below grade, unless otherwise shown or indicated.
   2. Perform excavation, bedding, backfilling, and surface restoration, including pavement replacement where required, in accordance with Section (--1--), and Section XXXXX, Flexible Paving.
   3. Install warning tape 12 inches below finished grade over buried conduits, unless otherwise shown or indicated.

G. Empty Conduits:
   1. Install nylon pull wire in each empty conduit and cap conduits not terminating in boxes with permanent fittings designed for the purpose.

H. Field Bends: No indentations. Diameter of conduit shall not vary more than 15 percent at bends.

I. Joints:
   1. Apply conductive compound to joints before assembly.
   2. Make up joints tight and ground thoroughly.
   3. Use standard tapered pipe threads for conduit and fittings.
   4. Cut conduit ends square and ream to prevent damaging wire and cable.
   5. Use full threaded couplings. Split couplings are not allowed.
   6. Use strap wrenches and vises to install conduit. Replace conduit with wrench marks.
   7. Apply zinc-rich paint to exposed threads and other areas of galvanized conduit system where base metal is exposed.

J. Terminations:
   1. Install insulated bushings on conduits entering boxes or cabinets, except when threaded hubs are used.
   2. Provide locknuts on both inside and outside of enclosure, except when threaded hubs are used.
   3. Use of bushings in lieu of locknuts is not allowed.
   4. Install conduit hubs on conduits entering boxes or cabinets in wet and corrosive areas.

K. Moisture Protection:
   1. Plug or cap conduit ends at time of installation to prevent entrance of moisture and foreign materials.
   2. Underground and embedded conduit connections shall be watertight.
   3. Thruwall Seals and Conduit Sealing Bushings: Install for conduits passing through concrete slabs, floors, walls, or concrete block walls.
   4. Drainage: Conduit runs shall be fully drainable. Where possible install conduit runs to drain to one end and away from building. Avoid pockets or depressions in conduit runs.
   5. Seal conduit openings within control and instrumentation panels and distribution equipment with duct sealing compound to provide watertight seal.

L. Corrosion Protection:
   1. Conduit Curb:
      a. For conduits routed in concrete slabs or floors and stub-ups through floor, provide (--1--)-inch high concrete curb, extending two inches from outer surface of conduit penetrating floor, to prevent corrosion. For floor-mounted equipment, concrete equipment base shall be in lieu of concrete curb.
      b. Conduit stub-ups shall be 90-degree, PVC-coated, rigid, galvanized steel conduit elbow. PVC-coated elbow shall extend a minimum of 1/2-inch above top of concrete curb or equipment base. Should elbow not reach specified height, provide PVC-coated conduit extension to accommodate specified requirements. Provide coupling or fitting for transition from rigid galvanized steel conduit or PVC conduit in slab to PVC-coated elbow.
      c. For conduits stubbing up and terminating at equipment enclosure mounted on concrete base, provide insulated grounding bushing on PVC-coated rigid steel elbow.
      d. For conduits stubbing up and extending to boxes, cabinets, and other enclosures above the concrete curb in wet and dusty areas, provide conduit coupling/fittings between the PVC-coated rigid steel elbow and rigid steel conduit for transition between the two conduit types.
      e. For conduits stubbing up and extending to boxes, cabinets, and other enclosures above the concrete curb or equipment base in corrosive areas, continue conduit system with PVC-coated rigid steel conduit
   2. Dissimilar Metals:
      a. Prevent occurrence of electrolytic action between dissimilar metals.
      b. Do not use copper products in connection with aluminum, and do not use aluminum in locations subject to drainage of copper compounds on bare aluminum.
      c. Back paint aluminum in contact with masonry or concrete with two coats of aluminum-pigmented bituminous paint.

M. Reused Existing Conduits:
   1. Pull rag swab through conduits to remove water and to clean conduit prior to installing new cable.
   2. Repeat swabbing until all foreign material is removed.
   3. Pull mandrel through conduit, if necessary, to remove obstructions.

N. Core drill for individual conduits passing through existing concrete slabs and walls. Notify ENGINEER in writing in advance of core drilling. Prior to core drilling, drill sufficient number of small exploratory holes to establish that the area to be core drilled is free of existing embedded conduits. Seal spaces around conduit as indicated in Paragraph 3.2.K.3 of this Section.

O. Non-metallic Conduit:
   1. Install in accordance with manufacturer's recommendations.
   2. Provide manufacturer's recommended adhesives or sealants for watertight connections.
   3. Provide expansion fittings for expansion and contraction to compensate for temperature variations. Fittings shall be watertight and suitable for direct burial.
   4. Transition to PVC-coated rigid steel conduit before making turn up to enclosures.

P. Flexible Conduit:
   1. Install at motors, transformers, field instruments, and equipment subject to vibration or that require movement for maintenance purposes.
   2. All flexible connections shall be made as short as practicable and of the same size as the feeder conduit unless indicated otherwise on the Drawings.
   3. Liquid-tight conduit used to connect to motor terminal boxes for housing motor conductors shall be not less than twelve times the conduit trade size in length but in no case less than 12 inches.
   4. Provide necessary reducer where equipment furnished cannot accept 3/4 inch diameter flexible conduit.

Q. PVC-coated Rigid Steel Conduit:
   1. Install in accordance with manufacturer's recommendations.
   2. Install with manufacturer's installation tools to avoid damage to PVC coating.
   3. Repair damaged PVC coating with manufacturer's recommended touch-up compound.

R. Identify conduits, including spares, in accordance with Section 16075, Identification for Electrical Systems.

3.2 FIELD QUALITY CONTROL

A. Site Tests:
   1. Test conduits by pulling through each conduit a cylindrical mandrel with length not less than two pipe inside diameters, having an outside diameter equal to 90 percent of conduit's inside diameter.
   2. Maintain a record, by number, of all conduits successfully tested.
   3. Repair or replace conduits that do not successfully pass testing, and re-test.

END OF SECTION

THIS PAGE INTENTIONALLY LEFT BLANK

SECTION 16135

PULL, JUNCTION, AND TERMINAL BOXES

PART 1 – GENERAL

1.1 DESCRIPTION

A. Scope:
   1. CONTRACTOR shall provide all labor, materials, equipment, and incidentals as shown, specified, and required to furnish and install pull, junction, and terminal boxes.

B. Related Sections:
   1. Section 16050, General Provisions for Electrical Systems.
   2. Section 16070, Hangers and Supports for Electrical Systems.
   3. Section 16075, Identification for Electrical Systems.

1.2 REFERENCES

A. Standards referenced in this Section are.

1.3 QUALITY ASSURANCE

A. Regulatory Requirements:
1. NEC Article 314, Outlet, Device, Pull and Junction Boxes; Conduit Bodies; Fittings; and Handhole Enclosures.

1.4 SUBMITTALS

A. Action Submittals: Submit the following:
   1. Product Data:
      a. Manufacturer's technical information for pull, junction, and terminal boxes proposed for use.

PART 2 – PRODUCTS

2.1 MATERIALS

A. Pull, Junction, and Terminal Boxes:

1. General – Applicable to All Boxes:
   a. Description and Performance Criteria:
      1) Provide pull, junction, and terminal boxes rated at not less than NEMA 12 and as specified for each location in accordance with NEMA requirements and as required for area classifications specified in Section 16050, General Provisions for Electrical Systems.
   b. Manufacturers: Provide products of one of the following:
      1) Appleton Electric Company.
      2) Crouse-Hinds Company.
      3) Hoffman Engineering Company.
      4) Or equal.
   c. Materials: Pull boxes embedded in concrete slabs shall be cast iron.
   e. Terminal strips and terminal blocks in terminal boxes shall be mounted on terminal box sub-panels.
   e. Identification: Boxes shall be identified in accordance with Section 16075, Identification for Electrical Systems.
2. Materials and Construction – Dusty Locations:
   a. Material: Welded and galvanized sheet steel of USS gage.
   b. Gasket: Oil-resistant gasket.
   c. Access: Lift-off hinges and quick-release latches.
   d. Material Thickness:
      1) Boxes with dimension two feet and smaller shall be 14-gage.
      2) Boxes with dimension between two and three feet shall be 12 gage.
      3) Boxes with dimension of three feet or more in any direction shall be 10-gage.
3. Materials and Construction - Wet, Corrosive, or Hazardous Locations:
   a. Rating:
      1) Pull boxes in wet, corrosive, or outdoor areas shall be NEMA 4X.
   b. Material:
      1) Cast gray iron alloy with hot-dip galvanized finish, or cast malleable iron bodies and covers.
      2) Large boxes not generally available in cast iron construction shall be copper-free aluminum alloy or Type 316 stainless steel, as required by location.
      3) In corrosive locations, where the conduit system is PVC-coated, boxes shall be cast metal with factory-applied 40-mil PVC coating, Type 316 stainless steel, or non-metallic thermoplastic or fiberglass reinforced plastic material.
   c. Gasket:
      1) Provide neoprene gaskets for wet and corrosive locations.
      2) Gaskets shall be an approved type designed for the purpose. Improvised gaskets are not acceptable.
   d. Access: Stainless steel cover bolts.
   e. Features:
      1) External mounting lugs.
      2) Drilled and tapped conduit holes.

3) Boxes where conduits enter building or structure below grade shall have 1/4-inch drain hole at bottom of the box.
4) Provide threaded connections for explosion proof boxes.

B. Terminal Blocks:
1. Products and Manufacturers: Provide one of the following:
   a. Allen-Bradley Company, Bulletin, Model 1492.
   b. General Electric Company, Model CR151K.
   c. Or equal.
2. Material and Construction:
   a. NEMA-rated nylon modular terminal blocks.
   b. 600-volt rated.
   c. Control and alarm circuit terminals shall be screwed type with permanently affixed numeric identifiers beside each connection.
   d. Power terminals shall be copper and rated for the circuit ampacity.

PART 3 – EXECUTION

3.1 INSPECTION

A. Examine conditions under which the Work will be installed and notify ENGINEER in writing of conditions detrimental to proper and timely completion of the Work. Do not proceed with the Work until unsatisfactory conditions are corrected.

3.2 INSTALLATION

A. Mount boxes so that sufficient access and working space is provided and maintain clearance of not less than 1/4-inch from walls.

B. Securely fasten boxes to walls or other structural surfaces on which boxes are mounted. Provide independent supports that comply with Section 16070, Hangers and Supports for Electrical Systems, where boxes will not be mounted on walls or other structural surface.

C. Install pull boxes where shown or indicated, and provide pull boxes where one or more of the following conditions exist:
1. Conduit runs containing more than three 90-degree bends, or .
2. Conduit runs exceeding 200 feet in length.
3. Conduit runs exceeding 360 total degrees of bends.

D. Provide removable, flame-retardant, insulating cable supports in boxes with any dimension exceeding three feet.

E. Field-apply PVC touch-up to scratched PVC boxes damaged during installation. Touch-up work shall be in accordance with manufacturer's recommendations and instructions.

F. Size junction, pull, and terminal boxes in accordance with NEC Article 314 and other Laws and Regulations.

G. Provide terminal blocks in boxes where shown and where cable terminations or splices are required.

+ + END OF SECTION + +

SECTION 16138

HANDHOLES FOR ELECTRICAL SYSTEMS

PART 1 – GENERAL

1.1 DESCRIPTION

A. Scope:
   1. Provide all labor, materials, equipment, and incidentals as shown, specified, and required to furnish and install manholes and handholes for electrical systems Work.

B. Coordination:
   1. Coordinate handhole installation with piping, sheeting other excavation supports, and other Underground Facilities, and locate clear of interferences.
   2. Review installation procedures under this and other Sections and coordinate installation of items to be installed with or before handhole for electrical systems Work.

C. Related Sections:
   1. Section 02200, Earthwork
   2. Section 02511, Asphalt Paving.

1.2 REFERENCES

A. Standards referenced in this Section are:
   1. AASHTO, Specifications for Highway Bridges.
   2. ANSI/SCTE 77, Specification for Underground Enclosure Integrity.
   3. ASTM A615/A615M, Specification for Deformed and Plain Carbon-Steel Bars for Concrete Reinforcement
   4. ASTM D4101, Specification for Polypropylene Injection and Extrusion Materials

1.3 QUALITY ASSURANCE

A. Component Supply and Compatibility:
   1. Obtain all handholes furnished under this Section from a single Supplier, unless otherwise acceptable to ENGINEER.
   2. Handhole Supplier shall review and approve the Shop Drawing submittals for the handholes furnished.

1.4 SUBMITTALS

A. Action Submittals: Submit the following:
   1. Shop Drawings:
      a. Handholes: Submit schedule of handholes to be furnished and dimensions and pertinent data for each.
   2. Product Data:
      a. Manufacturer's technical information, specifications, and literature for handholes, and accessories proposed for use.

PART 2 – PRODUCTS

2.2 HANDHOLES

A. Material and Construction:
   1. Manufacturer: Provide products of one of the following:
      a. Quazite
      b. Or equal
   2. Material: Precast polymer concrete.
   3. Duct entrances sized and located to suit ductbanks.
   4. Enclosures and covers shall be UL-listed.
   5. Enclosures, boxes, and covers shall comply with test provisions of ANSI/SCTE 77 for Tier 15 applications.
   6. Covers shall have coefficient of friction of not less than 0.50, in accordance with ASTM C1028.
   7. Size handholes as specified in drawings, as applicable.
   8. Handholes shall be PT Style, unless otherwise stated in drawings.

PART 3 – EXECUTION

3.1 INSPECTION

A. Examine conditions under which the Work will be installed and notify ENGINEER in writing of conditions detrimental to proper and timely completion of the Work. Do not proceed with the Work until unsatisfactory conditions are corrected.

3.2 INSTALLATION

A. Excavation and Backfill:
   1. Provide handholes for electrical systems where shown or indicated and verify at the Site the required locations.
   2. Perform excavation and filling required for installing handholes for electrical systems, in accordance with Section 02200, Earthwork.

3. Provide handholes on granular subbase course as shown or indicated. If not shown, provide layer of compacted select fill not less than six inches deep on which handhole for electrical systems will be installed.
4. Carefully set, level, and align at proper grade handholes.

C. Handhole structures shall be watertight. Provide foam sealant to seal all penetrations into handholes for electrical systems.

D. Grounding:
1. Provide 3/4-inch by 10-foot copper-clad ground rod for each manhole.
2. Bond all exposed metal manhole accessories and concrete reinforcing rods with No. 4 AWG minimum bare copper wire and connect to ground rod and to the ductbank ground cable.

E. Grading at Handholes:
1. Unpaved Areas:
   a. Install handholes in unpaved areas as shown or directed by ENGINEER to rim elevation higher than finished grade.
   b. Grade the ground surface to drain away from handholes.
   c. Provide fill around handholes to level of upper rim of handhole frame, and evenly grade the surface to a one (vertical)-to-five (horizontal) slope to surrounding grade, unless otherwise shown or directed by ENGINEER.
2. Paved or Travelled Areas:
   a. Install handholes in paved or travelled areas to meet final grade of paved or concrete surface.
   b. Do not install handholes directly in any roadways or streets.
3. CONTRACTOR shall be solely responsible for proper height of handholes necessary to reach final grade. ENGINEER's review of Shop Drawings and other submittals for handholes is general in nature.

3.3 FIELD QUALITY CONTROL

A. Watertightness:
1. Handholes for electrical systems shall be free of visible leakage. Inspect each handhole accompanied by ENGINEER, and repair leaks.

+ + END OF SECTION + +

SECTION 16143

DISCONNECT SWITCHES

PART 1 GENERAL

1.1 DESCRIPTION

A. Scope:
   1. CONTRACTOR shall provide all labor, materials, equipment, and incidentals as shown, specified, and required to furnish and install disconnect switches.

B. Related Sections:
   1. Section 16050, General Provisions for Electrical Systems.
   2. Section 16075, Identification for Electrical Systems.
   3. Section XXXXX, Snap Switches.
   4. Section 16070, Hanger and Supports for Electrical Systems.

1.2 REFERENCES

A. Standards referenced in this Section are:
   1. UL 98, Enclosed and Dead-Front Switches.
   2. NEMA KS 1, Enclosed and Miscellaneous Distribution Equipment Switches (600 Volts Maximum).
   3. NEMA 250, Enclosures for Electrical Equipment (1000 Volts Maximum).

1.3 QUALITY ASSURANCE

A. Regulatory Requirements:
   1. NEC Article 404, Switches.
   2. Disconnect switches shall bear the UL label.

1.4 SUBMITTALS

A. Action Submittals: Submit the following:
   1. Shop Drawings:
      a. Listing of each switch to be furnished, including location, rating, and NEMA enclosure type for each.
   2. Product Data:
      a. Manufacturer's technical information for disconnect switches proposed for use.

B. Maintenance Material Submittals: Submit the following:
   1. Extra Stock Materials:
      a. Furnish one set of spare fuses for each fused disconnect switch to be installed.

PART 2 PRODUCTS

2.1 MANUFACTURERS

A. Manufacturers: Provide products of one of the following:
   1. General Electric Company Type TH or equivalent.
   2. Cutler-Hammer.
   3. Square-D Company.
   4. Siemens.
   5. Or equal.

2.2 MATERIALS

A. Service Disconnect Switches:
   1. Type: Fused, heavy duty, single throw, quick make, quick break mechanism, visible blades in "OFF" position, front cover interlock, and indicator handle.
   2. Switch shall have provisions for locking in "OPEN" position.
   3. Rating: Voltage, current and short circuit ratings and number of poles as shown or indicated on the Drawings. Switch shall bear UL label indicating suitability for use as service equipment and shall comply with UL 98, NEMA KS 1, and NEMA 250.
   4. Provide auxiliary dry contacts to indicate switch position where specified.

B. Single Throw, Circuit Disconnect Switches:
   1. Type: Fused or unfused, horsepower rated, heavy duty, single throw, quick make, quick break mechanism, visible blades in the "OFF" position, safety handle, front cover interlock, and indicator handle.
   2. Switch shall have provisions for locking in "OPEN" position.
   3. Rating: Voltage and current ratings and number of poles as required for motor or equipment circuits being disconnected. Switches shall bear a UL label and shall comply with the requirements of UL 98, NEMA KS 1 and NEMA 250.
   4. Provide auxiliary dry contacts to indicate switch position where specified.

C. Double Throw Safety Switches:
   1. Type: Unfused, double throw with center "OFF" position, quick make, quick break mechanism, visible blades in the "OFF" position, and safety handle.
   2. Rating: Voltage and current ratings and number of poles as required for circuits being disconnected. Switches shall bear UL label and shall comply with UL 98, NEMA KS 1, and NEMA 250.
   3. Provide auxiliary dry contacts to indicate switch position where specified.

D. Disconnect Switches for 120-volt, Single-phase Circuits:
   1. Refer to Section XXXXX, Snap Switches.

E. Enclosures: NEMA rating shall be as required for area classifications specified in Section 16050, General Provisions for Electrical Systems, unless otherwise specified.

F. Identification:
   1. Identify enclosures in accordance with Section 16075, Identification for Electrical Systems.

2. Provide nameplate to identify the equipment served by disconnect switch and associated source of power.

PART 3 EXECUTION

3.1 INSPECTION

A. Examine conditions under which the Work will be installed and notify ENGINEER in writing of conditions detrimental to proper and timely completion of the Work. Do not proceed with the Work until unsatisfactory conditions are corrected.

3.2 INSTALLATION

A. Install equipment so that sufficient access and working space is provided for ready and safe operation and maintenance.

B. Securely fasten equipment to walls or other structural supports on which they are mounted. Provide independent supports per Section 16070, Hanger and Supports for Electrical Systems, where no wall or other structural surface exists. Mount disconnect enclosures at a height not exceeding six feet.

C. Provide suitable 1/4-inch spacers to prevent mounting enclosure directly against walls.

END OF SECTION

THIS PAGE INTENTIONALLY LEFT BLANK

SECTION 16161
SURGE PROTECTION DEVICES

PART 1 GENERAL

1.1 DESCRIPTION

A. Scope:
1. CONTRACTOR shall provide all labor, materials, equipment, and incidentals as shown, specified, and required to furnish and install surge protective devices (SPD).
2. SPDs furnished under this Section shall be ANSI/UL 1449 Type 2 integrating both surge suppression and high-frequency noise filtering suitable for use on low-voltage distribution systems.

B. Related Sections:
1. Section 16050, General Provisions for Electrical Systems.
2. Section 16423, Motor Control Centers.
3. Section XXXXX, Switchboards.
4. Section 16440, Panelboards.

1.2 REFERENCES

A. Standards referenced in this Section are:
1. ANSI/UL 1449, Surge Protective Devices.
2. IEEE C62.11, Metal-Oxide Surge Arresters for AC Power Circuits (>1 kV)
3. IEEE C62.41, Recommended Practice on Surge Voltages in Low-voltage AC Power Circuits.
4. IEEE C62.45, Recommended Practice on Surge Testing for Equipment Connected to Low-Voltage (1,000 V and Less) AC Power Circuits.
5. UL 1283, Electromagnetic Interference Filters.

1.3 QUALITY ASSURANCE

A. Qualifications:
1. Manufacturer: Shall have at least five years experience manufacturing and servicing products substantially similar to those required and shall be able to submit documentation of at least five installations in satisfactory operation for at least five years each.

B. Component Supply and Compatibility:
1. Obtain all products included in this Section regardless of component manufacturer from a single SPD manufacturer.
2. 2. SPD manufacturer shall review and approve or prepare all Shop Drawings and other submittals for all components furnished under this Section.
3. 3. Components shall be suitable for the specified service conditions and shall be integrated into overall assembly by SPD manufacturer.

C. Regulatory Requirements: Comply with the following:

1. NEC 110.9, Requirements for Electrical Installations, Interrupting Rating.
2. NEC 240.21, Overcurrent Protection, Location in Circuit.

1.4 SUBMITTALS

A. Action Submittals: Submit the following:
   1. Shop Drawings:
      a. Electrical and mechanical drawings for each type of unit, showing electrical ratings, dimensions, mounting provisions, connection details, and layout diagrams.
      b. Components list and nameplate schedule.
      c. Summary sheets with schedules of equipment.
   2. Product Data:
      a. Manufacturer's technical information, including catalog information.
      b. Manufacturer's technical specifications with assembly and component ratings.

B. Informational Submittals: Submit the following:
   1. Certifications:
      a. Certification that SPD devices comply with standards referenced in this Section.
   2. Source Quality Control Submittals:
      a. Report of results of testing and inspections performed at manufacturer's shop.
   3. Supplier Reports:
      a. Submit written report of results of each visit to Site by Supplier's service technician, including purpose and time of visit, tasks performed, and results obtained. Submit within two days of completion of visit to the Site.
   4. Qualifications Statements:
      a. Manufacture, when requested by ENGINEER.

C. Closeout Submittals: Submit the Following
   1. Operations and Maintenance Data:
      a. Submit in accordance with Section XXXXX, Operations and Maintenance Data.
      b. Include acceptable test reports, maintenance data and schedules, description of operation, wiring diagrams, and list of spare parts recommended for one year of operation with current price list.
   2. Warranty Documentation: Submit example warranty at time of shipment of the equipment. Include final warranty accepted by ENGINEER in the operations and maintenance manual for the equipment.

1.5 DELIVERY, STORAGE, AND HANDLING.

A. Delivery:
   1. Upon delivery, check for evidence of water that may have entered equipment during transit.

B. Storage:
   1. Store SPD equipment in a clean, dry location with controls for uniform temperature and humidity. Protect equipment with coverings and maintain environmental controls.
   2. Protect equipment from corrosion and deterioration.

1.6 WARRANTY

A. General Warranty: The special warranty specified in this Article shall not deprive OWNER of other rights or remedies OWNER may otherwise have under the Contract Documents and shall be in addition to, and run concurrent with, other warranties made by CONTRACTOR under the Contract Documents. The obligations of CONTRACTOR under the Contract Documents shall not be limited in any way by the provisions of the specified special warranty.

B. Special Warranty on Materials and Equipment:
   1. Provide manufacturer's written warranty, running to the benefit of OWNER, agreeing to correct, or at option of OWNER, remove or replace materials or equipment specified in this Section found to be defective during a period of five years after the date of Substantial Completion.

PART 2 PRODUCTS

2.1 MANUFACTURERS

A. Manufacturers: Provide equipment of one of the following:
   1. General Electric.
   2. Schneider Electric/Square-D Company.
   3. Eaton/Cutler-Hammer.
   4. Or equal.

2.2 EQUIPMENT

A. General:
   1. SPD shall be modular, high-energy, parallel design with fast-acting transient voltage suppression using metal oxide varistors. Equipment shall provide noise attenuation with electromagnetic interference filter.
   2. SPD shall comply with requirements of the following:
      a. ANSI/UL 1449.
      b. UL 1283.
      c. IEEE C62.11, IEEE C62.41 and IEEE C62.45.
   3. SPD shall be suitable for operation under the following environmental conditions:
      a. Relative Humidity: Zero to 95 percent, non-condensing.
      b. Frequency: 47 to 63 Hertz.
      c. Temperature: Zero to 149 degrees F.
   4. SPD operating voltage and IEEE C62.41 and IEEE C62.45 Category A, B, and C application environments shall be suitable for the associated SPD location(s) shown or indicated on the Drawings.
   5. SPD shall be suitable for internal and external mounting. Where shown on the Drawings, SPD shall be factory-mounted and integrated into distribution equipment specified under the following Sections:
      a. Section 16423, Motor Control Centers.
      b. Section XXXXX, Switchboards.
      c. Section 16440, Panelboards.

B. SPD shall include a surge suppression path for each mode as required for the system configuration shown on the Drawings. Each mode shall be individually fused and equipped with thermal cutouts. SPD short-circuit rating shall be 200 kA. Protection modes shall include, to the extent applicable, the following:
   1. Line-to-line.
   2. Line-to-neutral.
   3. Line-to-ground.
   4. Neutral-to-ground.

C. SPD shall include electromagnetic interference/radio frequency interference (EMI/RFI) noise rejection filter with attenuation up to 30 dB from 10 kHz to 100 MHz.

D. SPDs and components in the operating path shall have maximum continuous operating voltage greater than 115 percent of nominal system operating voltage.

E. ANSI/UL 1449 minimum withstand rating shall be 20 kA per pole, and ANSI/UL 1449 voltage protection rating for SPD shall not exceed the following:

Modes	208Y/120	480Y/277
L-N,L-G, N-G	800	1200
L-L	1200	2000

F. SPD surge capacity based upon IEEE C62.41 location category shall, as a minimum, be the following:

Category	Application	Per Phase	Per Mode
C	Service entrance	240 kA	120 kA
B	High exposure locations (distribution equipment)	160 kA	80 kA
A	Branch locations	120 kA	60 kA

2.3 ACCESSORIES

A. Provide SPD equipped with the following accessories:
   1. Surge counter with display for indicating the number of surges detected.
   2. LED indicators for monitoring device status.
   3. Audible alarm and silence switch for indicating an inoperative condition.
   4. Dry contacts, "Form C", for remote annunciation of unit status.
   5. Indicators, counter, alarm, and silence switch shall be visible and accessible from front of the SPD. When SPD is integral to switchgear, motor control center, panelboard, or other equipment, indicators, counter, alarm, and silence switch shall be visible and accessible from front of the equipment in which the SPD is installed.
   6. Enclosure for each externally-mounted SPD: NEMA rating shall be as required for area classifications specified in Section 16050, General Provisions for Electrical Systems.

2.4 SOURCE QUALITY CONTROL

A. Perform manufacturer's standard factory tests on equipment. Tests shall be in accordance with IEEE C62.45 and ANSI/UL 1449.

PART 3 EXECUTION

3.1 INSPECTION

A. Examine conditions under which materials and equipment will be installed and notify ENGINEER in writing of conditions detrimental to proper and timely completion of the Work. Do not proceed with the Work until unsatisfactory conditions are corrected.

3.2 INSTALLATION

A. Install SPD at locations shown on the Drawings in accordance with equipment manufacturer's recommendations, Laws, and Regulations, and the Contract Documents.

B. Conductor length between suppressor and connection point shall be as short and as straight as possible.

END OF SECTION

THIS PAGE INTENTIONALLY LEFT BLANK

SECTION 16271

DRY-TYPE LOW-VOLTAGE DISTRIBUTION TRANSFORMERS

PART 1 GENERAL

DESCRIPTION

A. Scope:
   1. CONTRACTOR shall provide all labor, materials, equipment and incidentals as shown, specified, and required to furnish and install dry type low-voltage distribution transformers.

B. Related Sections:
   1. Section 16050, General Provisions for Electrical Systems.
   2. Section 16450, Grounding and Bonding for Electrical Systems.
   3. Section 16075, Identification for Electrical Systems.

REFERENCES

C. Standards referenced in this Section are:
   1. NEMA ST-20, Dry Type Transformers for General Applications.
   2. NEMA TP-1, Guide for Determining Energy Efficiency for Distribution Transformers.
   3. NEMA TP-2, Standard Test Method for Measuring the Energy Consumption for Distribution Transformers.
   4. UL 1561, Dry Type General Purpose and Power Transformers.

QUALITY ASSURANCE

D. Regulatory Requirements:
   1. NEC Article 450, Transformers and Transformer Vault (Including Secondary Ties).

SUBMITTALS

E. Action Submittals: Submit the following:
   1. Shop Drawings:
      a. Schedule of transformers to be furnished with ratings and other required technical data.
      b. Proposed location for each transformer, including pad layout, dimensions, and appurtenances, as applicable.
   2. Product Data:
      a. Supplier's technical information for transformers proposed for use.

PART 2 PRODUCTS

2.1 MATERIALS

A. Dry Type Two-Winding Transformer:
   1. Type: Dry type, air cooled, low temperature rise. Transformers 15 kVA and larger shall be energy efficient, complying with NEMA TP-1 Class 1 efficiency levels. Transformers less than 15 kVA shall be general purpose.
   2. Rating: KVA, primary voltage and connection, secondary voltage and connection, frequency and number of phases shall be as shown on the Drawings.
   3. Insulation: Insulation and average winding temperature rise (in a 40 degree C maximum ambient) for rated kVA per the following table. Energy efficient transformers shall be capable of 15 percent continuous overload at 150 degrees C temperature rise.

kVA Rating	Insulation Class (degrees C)	Temperature Rise (degrees C)
1 to 100 kVA	185	115
100 to 500 kVA	220	115

   4. Winding Taps - Unless noted otherwise, all transformers shall have a minimum number of 2.5% fully-rated KVA taps below (FCBN) and above (FCAN) rated primary voltage in accordance with the following;
      a. One phase, up through 25 KVA; 2 FCAN and 2 FCBN
      b. One phase, 37 ½ KVA and Larger; 2 FCAN and 4 FCBN
      c. Three phase, up through 15 KVA; 2 FCAN and 2 FCBN
      d. Three phase, 30 KVA and Larger, 2 FCAN and 4 FCBN
   5. Basic impulse level (BIL) shall be 10 KV, except the BIL for dry-type outdoor transformers larger than 100KVA, shall be 25KV for 480V or 120/208V windings and 95KV BIL for 13.8 KV windings.
   6. Sound Level: NEMA ST-20 standard.
   7. Enclosure: UL listed for the application.
   8. Identification: Identify transformers in accordance with Section 16075, Identification for Electrical Systems, with the transformer number and voltages, connection data, kVA ratings, impedance, and overload capacity.
   9. Transformers shall comply with NEMA ST-20, NEMA TP-1, NEMA TP-2, and UL 1561.
   10. Transformers shall bear the label of the Underwriters' Laboratories, Inc.

B. Dry Type Buck and Boost Transformer:
   1. Buck and boost transformers shall meet the requirements specified in this Section for dry-type two-winding transformers, except as specified below:
      a. Insulation and average winding temperature rise for rated kVA as follows:

kVA Rating	Insulation Class (degree C)	Temperature Rise (degree C)
0.25 to 2 kVA	185	115
3 to 7.5 kVA	185	115

C. Manufacturers: Provide products of one of the following:
   1. Cutler-Hammer.
   2. General Electric Company.
   3. Square D Company.
   4. Siemens.
   5. Or equal.

PART 3 EXECUTION

INSPECTION

A. Examine the conditions under which the dry type transformers are to be installed and notify ENGINEER in writing of conditions detrimental to the proper and timely completion of the Work. Do not proceed with the Work until unsatisfactory conditions have been corrected.

INSTALLATION

B. Install transformers on walls or floors at locations shown. Install floor mounted transformers on raised concrete bases. Provide sufficient access and working space for convenient and safe operation and maintenance.

C. Mount transformers so that vibrations are not transmitted to the building structural parts and other equipment. Make connections to transformers with flexible conduit.

D. Adjust tap settings to provide proper voltage at panelboards.

E. Install dry type transformers in conformance with governing codes and manufacturer's instructions and recommendations, and the Contract Documents.

END OF SECTION

THIS PAGE INTENTIONALLY LEFT BLANK

SECTION 16423

MOTOR CONTROL CENTERS

PART 1 – GENERAL

1.1 DESCRIPTION

A. Scope:
1. CONTRACTOR shall provide all labor, materials, equipment, and incidentals as shown, specified, and required to install motor control centers.

B. Coordination:
1. Review installation procedures under this and other Sections and coordinate installation of items to be installed with or before motor control center Work.

C. Related Sections:
1. Section 16075, Identification for Electrical Systems.
2. Section XXXXX, Electrical Power Distribution System Studies.
3. Section XXXXX, Automatic Transfer Switches.
4. Section 16161, Surge Protective Devices

1.2 REFERENCES

A. Standards referenced in this Section are:
1. ANSI/NETA ATS, Acceptance Testing Specifications for Electrical Power Equipment and Systems.

1.3 QUALITY ASSURANCE

1.4 SUBMITTALS

1.5 DELIVERY, STORAGE AND HANDLING

A. Handling, and Unloading:
1. Upon delivery, check materials and equipment for evidence of water that may have entered equipment during transit.
2. Handling:
a. Lift, roll or jack motor control center equipment into locations shown.
b. Motor control centers shall be equipped to be handled by crane. Where cranes are not available equipment shall be suitable for placement on rollers using jacks to raise and lower the groups.

B. Storage and Protection:
1. Store motor control center equipment in a clean, dry location with controls for uniform temperature and humidity. Protect equipment with coverings and maintain environmental controls.

PART 2 EXECUTION

2.1 INSPECTION

A. Examine conditions under which Work is to be installed and notify ENGINEER in writing of conditions detrimental to proper and timely completion of the Work. Do not proceed with the Work until unsatisfactory conditions are corrected.

2.2 INSTALLATION

A. Install materials and equipment at locations shown or indicated on the Drawings. Install equipment on concrete bases in accordance with the Contract Documents and manufacturer's recommendations and instructions.

B. For installations against masonry walls, provide an insulation board, 1/4-inch minimum thickness, between motor control center and wall for corrosion protection. Trim board neatly within outline of motor control center.

C. Openings in top or side of motor control centers for other than conduit entrance are not allowed.

D. Bundle cable circuits together within enclosures and identify with durable tag secured to cabling twine.

E. Set motor circuit protectors at lowest setting that allows motor starting without nuisance tipping.

F. Verify that wiring diagrams on inside of door of each compartment reflect the circuitry actually provided and that correct overload heater size and motor circuit protector setting are noted.

G. Install in conformance with manufacturer's recommendations, Laws and Regulations, and the Contract Documents.

2.3 FIELD QUALITY CONTROL

A. Site Tests:
   1. Perform field testing and inspection of motor control centers. Inspect and test each motor control center after installation. Testing and inspection shall be in accordance with the manufacturer's recommendations and the Contract Documents, and be performed by manufacturer's factory-trained representative, Inform OWNER and ENGINEER when equipment is correctly installed, prior to testing. Do not energize equipment without permission of OWNER.
   2. Test Equipment, Calibration and Reporting: All test equipment, instrument calibration and test reports shall be in accordance with ANSI/NETA ATS.
   3. Perform the following minimum tests and checks before energizing equipment:
      a. Verify all overload and device settings.
      b. Inspect mechanical and electrical interlocks and controls for proper operation.

c. Check tightness of bolted connections.
d. Measure insulation resistance of each bus section, phase-to-phase and phase-to-ground.
e. Measure insulation resistance of each starter, phase-to-phase and phase-to-ground.
f. Measure insulation resistance of each control circuit with respect to ground.
g. Perform other tests recommended by equipment manufacturer.

4. Perform acceptance testing of motor control centers. Inspect and test each motor control center. Testing and inspection shall be performed by the independent testing firm, after completion of field testing specified in Paragraph 3.3.A.3 of this Section.
   a. Visual and Mechanical Inspection: Perform inspection of each motor control center in accordance with ANSI/NETA ATS. Inspection shall include:
      1) Inspect for proper anchorage, damage, and grounding.
      2) Verify all overload and device settings.
      3) Check tightness of bolted connections.
   b. Electrical Tests: Perform electrical testing of each motor control center in accordance with ANSI/NETA ATS. Testing shall include:
      1) Measure insulation resistance of each bus section, phase-to-phase and phase-to-ground.
      2) Measure insulation resistance of each starter phase-to-phase and phase-to-ground.
      3) Measure insulation resistance of each control circuit with respect to ground.
      4) Test motor overload units by current injection.
      5) Perform operational tests by initiating control devices for proper operation.
      6) Perform contact resistance test and insulation resistance test for each circuit breaker.
      7) Determine long-time, short-time, and instantaneous pick-up and delay as required.

B. Manufacturer's Services: Provide a qualified, factory trained serviceman to perform the following:
   1. Supervise unloading and installation of equipment.
   2. Instruct CONTRACTOR in installing equipment.
   3. Inspect, test, and adjust equipment after installation and ensure proper operation.
   4. Instruct operations and maintenance personnel in operation and maintenance of the equipment.
   5. Manufacturer's technician shall make visits to the Site as follows:
      a. First visit shall be for supervising unloading and handling of equipment and for instructing CONTRACTOR in proper equipment installation, and assisting in installing equipment. Technician shall train installing personnel in advance in proper handling and rigging of equipment. Minimum number of hours on-Site: (--1--) hours.
      b. Second visit shall be for checking completed installation, start-up of system; and performing field quality control testing. Technician shall test the system as specified in Article 3.3.A of this Section. Technician shall operate and test the system in the presence of ENGINEER and verify that equipment complies with the Contract

Documents and manufacturer's requirements. Technician shall adjust the system to initial settings as specified in Article 3.4 of this Section. Minimum number of hours on-Site: (--2--) hours.

c. Third visit shall be to instruct operations and maintenance personnel.
   1) Furnish services of manufacturer's qualified, factory-trained specialists to instruct OWNER's operations and maintenance personnel in recommended operation and maintenance of equipment.
   2) Training requirements, duration of instruction, and qualifications shall be in accordance with Section XXXXX, Instruction of Operations and Maintenance Personnel.
   3) Number of hours on-Site shall be in accordance with Section XXXXX, Instruction of Operations and Maintenance Personnel.

d. Technician shall revisit the Site as often as necessary until installation is acceptable.

e. Furnish services of manufacturer's factory-trained service technicians to correct defective Work within 72 hours of notification by OWNER during the correction period.

6. All costs, including expenses for travel, lodging, meals and incidentals, and cost of travel time, for visits to the Site shall be included in the Contract Price.

2.4 ADJUSTING

A. Calibrate, set, and program all protective devices. Coordinate protective devices furnished under this Section and provide proper settings of devices in accordance with the study performed under Section XXXXX, Electrical Power Distribution System Studies.

END OF SECTION

THIS PAGE INTENTIONALLY LEFT BLANK

SECTION 16425

LOW-VOLTAGE VARIABLE FREQUENCY DRIVES

PART 1 GENERAL

1.1 DESCRIPTION

A. Scope:
1. CONTRACTOR shall provide all labor, materials, equipment, services, and incidentals as shown, specified, and required to furnish and install low-voltage variable frequency drives, complete and operational.
2. Variable frequency drives required under this Section are low-voltage, voltage source inverter, pulse width modulated. Variable frequency drives shall be customized.
3. Low-voltage variable frequency drives included in this Section are associated with the following equipment:
   a. (--1--).

B. Related Sections:
1. Section 16070, Hangers and Supports for Electrical Systems.
2. Section 16075, Identification for Electrical Systems.
3. Section 16423, Motor Control Centers.

1.2 REFERENCES

A. Standards referenced in this Section are:
1. IEEE 519, Recommended Practices and Requirements for Harmonic Control in Electrical Power Systems.
2. ISO 9000, Quality Management Systems, Fundamentals and Vocabulary.
3. ISO 9001, Quality Management Systems, Requirements.
4. ISO 9002, Quality Systems, Model for Quality Assurance in Production, Installation and Servicing.
5. NEMA ICS 2, Controllers, Contactors and Overload Relays Rated 600 Volts.
6. NEMA ICS 7, Industrial Control and Systems Adjustable Speed Drives.
7. NEMA MG 1, Motor and Generators.
8. UL 489, Molded-Case Circuit Breakers, Molded-Case Switches and Circuit-Breaker Enclosures.
9. UL 508, Industrial Control Equipment.

1.3 DELIVERY, STORAGE, AND HANDLING

A. Packing, Shipping, Handling, and Unloading:
1. Packing:
   a. Inspect prior to packing to ensure that assemblies and components are complete and undamaged.
   b. Protect mating connections.

c. Cover all openings into enclosures with-vapor inhibiting, water-repellent material.
d. Indoor containers shall be bolted to skids.

2. Upon delivery, check materials and equipment for evidence of water that may have entered equipment during transit.
3. Handling:
   a. Lift, roll or jack low-voltage variable frequency drive equipment into locations shown.
   b. Variable frequency drives shall be equipped for handling required for installation. Handle equipment in accordance with manufacturer's requirements.

B. Storage and Protection:
1. Store low-voltage variable frequency drive equipment in a clean, dry location with controls for uniform temperature and humidity. Protect equipment with coverings and maintain environmental controls.

PART 2 EXECUTION

2.1 INSPECTION

A. Examine conditions under which the Work will be installed and notify ENGINEER in writing of conditions detrimental to proper and timely completion of the Work. Do not proceed with the Work until unsatisfactory conditions are corrected.

2.2 INSTALLATION

A. Install equipment in accordance with manufacturer's recommendations and instructions and in conformance with Laws and Regulations, and the Contract Documents.

B. Unless otherwise shown or indicated, install equipment per Section 16070, Hangers and Supports for Electrical Systems.

C. Install equipment with sufficient access and working space provided for ready and safe operation and maintenance.

D. For installations against masonry walls, provide an insulation board, 1/4-inch minimum thickness, between equipment and wall for corrosion protection. Trim board neatly within outline of equipment.

E. Install all terminations, lugs, and required appurtenances necessary to properly terminate power supplies.

F. Install control wiring terminations and appurtenances necessary to complete installing control and monitoring devices.

G. Immediately prior to Substantial Completion, replace all enclosure filters and frames provided under this Contract with new filters and frames, except expanded metal filter types. Immediately prior to Substantial Completion, clean expanded metal filters.

2.3 FIELD QUALITY CONTROL

A. Site Tests:

1. After installation, inspect, adjust, and test each low-voltage variable frequency drive at the Site. Testing and inspection shall be in accordance with manufacturer's recommendations and be performed by manufacturer's factory-trained representative. Through CONTRACTOR, manufacturer's factory-trained representative shall inform OWNER and ENGINEER when equipment is correctly installed and ready to be energized. Do not energize equipment without permission of OWNER.
2. Perform the following equipment inspection and testing and provide reports documenting procedures and results.
   a. Verify all device settings and drive adjustments.
   b. Inspect all mechanical and electrical interlocks and controls for proper operation.
   c. Test each drive through specified speed ranges and loads for a minimum of two hours per drive unit.
   d. Test each drive by using actual control signal for remote and local operation.
   e. Test each drive alarm function.
   f. Perform other tests recommended by equipment manufacturer.

END OF SECTION

THIS PAGE INTENTIONALLY LEFT BLANK

SECTION 16440

PANELBOARDS

PART 1 GENERAL

1.1 DESCRIPTION

A. Scope:
   1. CONTRACTOR shall provide all labor, materials, equipment, and incidentals as shown, specified, and required to furnish and install panelboards.

B. Related Sections:
   1. Section 16050, General Provisions for Electrical Systems.
   2. Section 16075, Identification for Electrical Systems.
   3. Section 16271, Dry-Type Low-Voltage Distribution Transformers
   4. Section 16161, Surge Protective Devices.

1.2 REFERENCES

A. Standards referenced in this Section are:
   1. NEMA PB 1, Panelboards.
   2. UL 67, Panelboards.

1.3 SUBMITTALS

A. Action Submittals: Submit the following:
   1. Shop Drawings:
      a. Listing of panelboards to be furnished with identification of their proposed location, and all electrical characteristics, including number and rating of branch circuit breakers and enclosure type.
   2. Product Data:
      a. Manufacturer's technical information for panelboards proposed for use, including product literature and specifications. Indicate options and features to be provided.

1.4 QUALITY ASSURANCE

A. Regulatory Requirements; Comply with the following:
   1. NEC Article 408, Switchboards and Panelboards.

1.5 PRODUCT DELIVERY, STORAGE AND HANDLING

A. Packing, Shipping, Handling, and Unloading:
   1. Packing:
      a. Inspect prior to packing to assure that assemblies and components are complete and undamaged.
      b. Protect mating connections.

c. Cover all openings into enclosures with-vapor inhibiting, water-repellent material.

2. Deliver materials and equipment to Site to ensure uninterrupted progress of the Work. Deliver anchorage materials to be embedded in concrete in ample time to prevent delaying the Work. Upon delivery, check materials and equipment for evidence of water that may have entered equipment during transit and general damage.
3. Comply with Section XXXXX, Product Delivery Requirements.

B. Storage and Protection:
1. Store panelboards in a clean, dry location with controls for uniform temperature and humidity. Protect equipment with coverings and maintain environmental controls.
2. Comply with Section XXXXX, Product Storage and Handling Requirements.

PART 2 PRODUCTS

2.1 MATERIALS

A. Panelboards:
1. Manufacturers: Provide products of one of the following:
   a. Eaton/Cutler-Hammer
   b. General Electric Company.
   c. Schneider Electric/Square D Company.
   d. Or equal.
2. Rating: Voltage rating, current rating, number of phases, number of wires and number of poles as shown or indicated on the Drawings.
3. Circuit breakers shall be of the frame size, trip rating, and number of poles as specified on drawings.
4. Circuit breakers installed outdoors shall be supplied in NEMA 3R enclosures. Circuit breakers in well vaults shall be installed in NEMA 4X enclosures. Unless noted otherwise, circuit breakers installed indoors shall be supplied in NEMA 1 enclosures. All breakers shall have provisions for locking the handle in the "OPEN" position.
5. Circuit breakers, unless noted otherwise on the drawings, shall be molded case, quick-make, quick-break, ambient compensated, thermal magnetic, capable of safely interrupting all loads up to and including the maximum interrupting ratings. All breakers greater than 225A shall be 600V unless contract documents direct otherwise. Interrupting ratings will be determined by actual short circuit analysis.
6. Bus Bars: Bus bars shall be 98 percent conductivity copper. Four-wire panel-boards shall have solid neutral bar. Each panel shall have ground bus bar.
7. Main: Panelboards shall have main circuit breaker, unless the Drawings specifically indicate main lugs only. The main circuit breaker shall be installed in the panelboard such that the breaker is closed when the operating handle is moved upward (for vertically mounted breaker) or to the right (for horizontally mounted breaker). The main breaker shall have "off - on" markings to clearly indicate the handle position and shall have its trip size engraved or permanently marked in a readily visible location.
8. Connect branch circuit breakers for sequence phasing.
9. Enclosures: Panel enclosures shall be as required for the area classifications indicated in Section 16050, General Provisions for Electrical Systems, unless otherwise indicated on the Drawings.

10. Construction: Code-grade steel, ample gutter wiring space, flush door, flush snap latch and lock. Panelboards shall comply with NEMA PB 1 and UL 67.
11. Trim: Surface or flush as required.
12. Directory: Typed or computer-printed card, with transparent protective cover in frame on back of door giving circuit numbers and area or equipment served.
13. Identification: Identify panelboards in accordance with Section 16075, Identification for Electrical Systems. Identification shall indicate panel number and voltage.
14. Directory of Existing Panelboards: When adding or removing breakers or loads from existing panelboards, provide a new typed or computer-generated directory card, indicating the circuit numbers and equipment served.
15. Provide surge protective device in accordance with Section 16161, Surge Protective Devices, for each panelboard shown or indicated on the Drawings. Surge protective device shall be included and factory-mounted within panelboard by panelboard manufacturer. Surge protective device monitoring and display shall be visible from front of panelboard.

B. Integrated Panelboard and Transformer:
1. Products and Manufacturers: Provide products of one of the following:
   a. Mini Power Zone by Schneider Electric/Square D Company.
   b. Mini Power Center by Eaton/Cutler-Hammer.
   c. Panel Tran by Acme Electric Corporation.
   d. Or equal.
2. General: Unit shall consist of encapsulated dry type transformer, primary and secondary main circuit breakers, and secondary panelboard all in one enclosure.
3. Transformer Rating: Transformer portion shall comply with Section 16271, Dry-type Low-Voltage Distribution Transformers. KVA, primary voltage, secondary voltage, frequency and number of phases shall be as shown or indicated on the Drawings.
4. Branch Circuits: Molded case circuit breakers, plug in thermal magnetic type with number of poles and trip ratings as shown or indicated on the Drawings. GFI circuit breakers installed as specified on drawings.
5. Enclosure: Enclosures shall be as required for the area classifications indicated in Section 16050, General Provisions for Electrical Systems, unless otherwise indicated on the Drawings.

PART 3 EXECUTION

3.1 INSPECTION

A. Examine conditions under which the Work is to be installed and notify ENGINEER in writing of conditions detrimental to the proper and timely completion of the Work. Do not proceed with the Work until unsatisfactory conditions are corrected.

3.2 INSTALLATION

A. Mounting: Install panelboards at locations shown or indicated. Set cabinets so that top branch circuit breaker is not over six feet above the floor.

B. Directory: Complete typewritten or computer-printed directory indicating items controlled by each circuit breaker and the size of feeder serving the panel.

C. The arrangement of the panelboard shall be in accordance with panel schedule shown on the drawings.

D. Identify panelboards in accordance with Section 16075, Identification for Electrical Systems.

E. Install in accordance with Laws and Regulations, manufacturer's recommendations, and the Contract Documents. Verify proper installation prior to energizing panelboards.

END OF SECTION

THIS PAGE INTENTIONALLY LEFT BLANK

SECTION 16450

GROUNDING AND BONDING FOR ELECTRICAL SYSTEMS

PART 1 – GENERAL

1.1 DESCRIPTION

A. Scope:
   1. CONTRACTOR shall provide labor, materials, equipment, and incidentals as shown, specified, and required to furnish and install complete grounding for electrical systems, structures, and equipment.

1.2 REFERENCES

A. Standards referenced in this Section are:
   1. ASTM B8, Specification for Concentric-Lay-Stranded Copper Conductors, Hard, Medium-Hard or Soft.
   2. UL 467, Grounding and Bonding Equipment.

1.3 QUALITY ASSURANCE

A. Regulatory Requirements
   1. National Electrical Code, (NEC).
      a. NEC Article 250, Grounding and Bonding.

1.4 SUBMITTALS

A. Action Submittals: Submit the following:
   1. Shop Drawings:
      a. Listing of grounding connector types identifying where each will be used.
      b. Layouts of each structure's ground grid.
      c. Test point construction details.
   2. Product Data:
      a. Manufacturer's technical information for grounding materials proposed for use.
   3. Testing Plans:
      a. Ground resistance test procedure.

B. Informational Submittals: Submit the following:
   1. Field Quality Control Submittals
      a. Results of ground resistance tests at each test point.

PART 2 – PRODUCTS

2.1 MATERIALS

A. Bare Ground Cable:
   1. Manufacturers: Provide products of one of the following:
      a. Cablec Corporation.
      b. General Cable Corporation.
      c. Southwire Cable Company.
      d. Or equal.
   2. Material: Soft-drawn, bare copper stranded cable complying with ASTM B8. No. 4/0 AWG minimum size unless otherwise shown or indicated on the Drawings.

B. Ground Rods:
   1. Manufacturers: Provide products of one of the following:
      a. Copperweld, Bimetallics Division.
      b. ITT Blackburn Company.
      c. Or equal.
   2. Material: Copper-clad rigid steel rods, 3/4-inch diameter, ten feet long.

C. Grounding Connectors:
   1. Products and Manufacturers: Provide one of the following:
      a. Pressure Connectors:
         1) O.Z./Gedney, Division of General Signal Corporation.
         2) Burndy Corporation.
         3) Or equal.
      b. Welded Connections:
         1) Cadweld by Erico Products, Incorporated.
         2) Therm-O-Weld by Burndy Corporation.
         3) Or equal.
   2. Material: Pressure connectors shall be copper alloy castings, designed and fabricated specifically for items to be connected and assembled with Durium or silicone bronze bolts, nuts, and washers. Welded connections shall be by exothermic process utilizing molds, cartridges, and hardware designed specifically for connection to be made.

PART 3 – EXECUTION

3.1 INSPECTION

A. Examine conditions for the Work and notify ENGINEER in writing of conditions detrimental to proper and timely completion of the Work. Do not proceed with Work until unsatisfactory conditions are corrected.

3.2 STRUCTURE GROUND SYSTEM

A. Provide grounding electrode system as shown and indicated on the Drawings.

B. Provide No. 4/0 bare copper cable around exterior perimeter of structures at not less than 2.5 feet below grade, unless otherwise shown or indicated on the Contract Documents.

C. For structures with steel columns, provide No. 4/0 ground cable from grid to each column around perimeter of structure. Connect cable to steel with exothermic welds.

E. For new structures with concrete foundation or footings, connect structure's reinforcing steel or other concrete-encased electrode to grounding grid.

F. Provide accessible test points for measuring the ground resistance of each grid.

G. Weld all buried connections except for test points.

3.3 EQUIPMENT GROUNDING

A. Ground electrical equipment in compliance with Laws and Regulations and the Contract Documents.

B. Equipment grounding conductors shall be bare stranded copper cable of adequate size installed in metal conduit where required for mechanical protection. Ground conductors, pulled into conduits with non-grounded conductors, shall be insulated. Insulation shall be green.

C. Control panels grounding conductors shall be bare stranded copper cable of adequate size to ground grid from AC ground bus, and an insulated stranded copper cable of adequate size to ground grid from DC ground bus.

D. Connect ground conductors to conduit with copper clamps, straps, or with grounding bushings.

E. Connect to piping by welding or brazing. Use copper bonding jumpers on gasketed joints.

F. Connect to equipment by means of lug compressed on cable end. Bolt lug to equipment frame using holes or terminals provided on equipment specifically for grounding. Do not use hold-down bolts. Where grounding provisions are not included, drill suitable holes in locations recommended by equipment manufacturer or designated by ENGINEER.

G. Connect to motors by bolting directly to motor frames, not to soleplates or supporting structures.

H. Connect to service water piping by means of copper clamps. Use copper bonding jumpers on gasketed joints.

I. Scrape painted surfaces clean and coat with conductive oxide-resistant compound.

3.4 FIELD QUALITY CONTROL

A. Site Tests:
   1. Test completed grounding systems for resistance to ground using an electrical three-terminal ground resistance tester. Test all grounded cables and metal parts for continuity of connection. OWNER will witness the testing.
   2. Grounding system maximum resistance shall not exceed five ohms under normally dry conditions when measured by resistance tester. Resistance values above five ohms shall be brought to ENGINEER's attention. Provide additional ground rods as required to attain a resistance to ground of less than five ohms for each ground grid.

+ + END OF SECTION + +

SECTION 16501

LIGHTING

PART 1 GENERAL

1.1 DESCRIPTION

A. Scope:
1. CONTRACTOR shall provide all labor, materials, equipment, and incidentals as shown, specified, and required to furnish and install lighting fixtures and associated controls.

B. Coordination:
1. Coordinate location of fixtures with piping, ductwork, openings, and other systems and equipment and locate clear of interferences.
2. Coordinate fixtures to be mounted in hung ceilings with the ceiling suspension system proposed.

C. Related Sections:
1. Section 16050, General Provisions for Electrical Systems.
2. Section 16075, Identification for Electrical Systems.

1.2 REFERENCES

A. Standards referenced in this Section are:
1. UL 935, Safety of Fluorescent Lamp Ballasts.
2. UL 1598, Safety of Luminaires.

1.3 QUALITY ASSURANCE

A. Regulatory Requirements: Comply with the following:
1. NEC Article 410, Luminaires, Lamp holders, and Lamps.

1.4 SUBMITTALS

A. Action Submittals: Submit the following:
1. Shop Drawings:
a. Schedule of light fixtures to be furnished, indicating fixture type and location for each.
b. Customized wiring diagrams.
2. Product Data:
a. Manufacturer's technical information, specifications, standard wiring diagrams, and catalog cuts for lighting fixtures proposed.
b. Fixture construction details.
c. ETL photometric and isocandle curves for each fixture proposed.
d. Verification that recessed fixtures to be mounted in hung ceilings are compatible with ceiling suspension system proposed.

B. Informational Submittals: Submit the following:
   1. Manufacturer's Instructions:
      a. Instructions and recommendations for handling, storing, and protecting the equipment.
      b. Installation instructions for the equipment, including setting drawings, templates, and directions and tolerances for installing anchorage devices.

C. Maintenance Material Submittals: Submit the following:
   1. Spare Parts and Extra Stock Materials: Furnish spare parts for each type of unit required as indicated in Part 2 of this Section.

1.5 PRODUCT DELIVERY, STORAGE AND HANDLING

A. Delivery:
   1. Upon delivery, inspect equipment for evidence of water that may have entered equipment during transit.

B. Storage:
   1. Store lighting fixtures, controls, related materials and equipment in clean, dry location with controls for uniform temperature and humidity. Protect materials and equipment with coverings and maintain environmental controls.
   2. Store materials and equipment for easy access for inspection and identification. Keep materials and equipment off ground, using pallets, platforms, or other supports. Protect materials and equipment from corrosion and deterioration.

PART 2 PRODUCTS

2.1 MATERIALS

A. Type: Lighting fixtures required shall be in accordance with the Luminaire Schedule on the Drawings Fixtures shall be complete with supports, ballasts, lamps, and incidentals, as required.

B. Lamps:
   1. Fluorescent: Fluorescent lamps shall be toxic characteristic leaching procedure (TCLP) compliant for low mercury content. Linear fluorescent lamps shall be T8, energy-efficient, extended life type, or as otherwise specified on the drawings. Compact fluorescent lamps shall be long-life, energy-efficient type.
   2. High Pressure Sodium: Shall be TCLP-compliant for low mercury content. Lamps shall be clear with high-efficacy and lumen maintenance.
   3. Metal Halide: Shall be fabricated for low mercury content and be TCLP-compliant when available. Lamps shall be clear-pulse, start type with high-efficacy and lumen maintenance.
   4. Incandescent: Inside-frosted.
   5. Spare Parts and Extra Stock Materials: Ten percent spare lamps of each type and wattage.

C. Ballasts:

1. Fluorescent: UL 935 listed, high power factor Class P, energy-efficient type. Indoor two-lamp fluorescent ballasts shall be electronic type with total harmonic distortion of less than 20 percent. Ballast factor shall be 0.85 minimum with total of less than 61 watts input. Provide cold weather type ballast where indicated in the Lighting Fixture Schedule.
2. High Intensity Discharge: UL 1029 listed, high power factor, constant wattage, stabilized autotransformer with line starting current the same or less than operating current.
3. Ballasts sound level shall be 30 decibels or less, sound rating "A" or better for 0.430 ampere ballasts and D or better for 0.800 and 1.5 ampere ballasts unless noted otherwise on the drawings.
4. The ballast operating temperature shall not exceed 90° C in continuous operation and shall be protected from overheating by an internal, thermally-actuated, automatic reclosing device to limit winding temperature to 120°C maximum.
5. Ballasts shall be Edison Testing Laboratories (ETL) listed and Certified Ballast Manufacturer Association, CMB-certified.
6. For fixtures utilizing double-ended lamps, provide fixture disconnecting means within the fixture.
7. Spare Parts and Extra Stock Materials: Ten percent spare ballasts of each type and quantity, but not less than one.

D. Hardware: Provide necessary hangers, supports, conduit adaptors, reducers, hooks, brackets, and other hardware required for safe fixture mounting. Hardware shall have protective, non corrosive finish.

E. Outdoor Fixtures: Provide each fixture to be installed outdoors with cut-off lens to reduce the fixture's light pollution emissions.

F. Time Switch:
1. Type: Astronomic dial time switch with day omitting device.
2. Products and Manufacturers: Provide of one of the following:
   a. Z Series by Tork Time Controls, Inc.
   b. Or equal.
3. 3. Timing Motor: Heavy-duty, synchronous, self starting, high torque, 120-volt or 277-volt, 60 Hertz, as shown on the Drawings.
4. Capacity: 40 amps per pole at 277 volts.
5. Dial: 24-hour rotation, with gear to provide one revolution per year that automatically raises the "ON" and "OFF" settings each day according to seasonal changes of sunset and sunrise.
6. Reserve Power: Spring driven reserve sufficient to operate time switch contacts for not less than 30 hours after power failure. On restoration of power, time switch shall transfer to synchronous motor drive and automatically rewind reserve.

G. Lighting Contactor and Controls:
1. Provide a lighting contactor and control system for control of each area where shown on the Drawings.
2. Product and Manufacturer: Provide products of one of the following:
   a. Type SM03 by Square D Company.
   b. Or equal.

3. System shall include:
   a. Enclosure sized as required, complete with input control fuse and screw type terminal blocks rated 300-volt, 20-amp quantity for all circuits, unless indicated otherwise on the Drawings.
   b. Single coil, electrically-operated, mechanically-held contactor. Contactor shall be rated 30-amp, 600-volt, with 120-volt operating coil, unless indicated otherwise on the Drawings. Number of poles shall be as shown on the Drawings. Provide multiple contactors when necessary.
   c. Where lighting contactors are controlled by photocell, provide a 120-volt, two-pole control relay, enclosure mounted to convert the two-wire photocell control to three-wire control required by contactor. Control shall include a cover mounted on-off-auto selector switch for "manual" or "auto" selection of operation. In "auto" position, contactor shall respond to photocell.
   d. Enclosure: As required for area classification per Section 16050, General Provisions for Electrical Systems.
   e. Identify panel in compliance with Section 16075, Identification for Electrical Systems.

H. Photocell:
   1. Products and Manufacturers: Provide one of the following:
      a. 2100 Series by Tork Time Controls, Inc.
      b. Or equal.
   2. Cadmium sulfide hermetically-sealed cell, fully temperature compensated, with time delay of not less than 15 seconds to prevent false switching.
   3. Built in fail safe light level selector, adjustable within limits of two to 50 foot-candles and factory set at 25 foot-candles.

I. Motion/Occupancy Sensor:
   1. Products and Manufacturers: Provide one of the following:
      a. Leviton, Motion Sensor Field-of-View PR 150-1LW
      b. Or equal.
   2. Adjustable time delay interval of 15 seconds to 15 minutes.
   3. Equipped with passive infrared (PIR) sensing technology.

PART 3 EXECUTION

3.1 INSPECTION

A. Examine conditions under which the Work will be installed and notify ENGINEER in writing of conditions detrimental to proper and timely completion of the Work. Do not proceed with the Work until unsatisfactory conditions are corrected.

3.2 INSTALLATION

A. General:
   1. Fixture mounting heights and locations indicated on the Drawings are approximate and are subject to revision in the field where necessary to clear conflicts and obstructions.

2. Mounting Heights: Mounting heights or elevations are to bottom of fixture or to centerline of device.
3. Install fixtures in accordance with Laws and Regulations, the Contract Documents, and manufacturer instructions and recommendations.
4. Mount fixtures so that sufficient access is available for ready and safe maintenance.
5. Securely fasten equipment to walls or other surfaces on which equipment is mounted.

B. Suspended Fixtures:
1. Pendant-mount using 1/2 inch diameter conduit stems.
2. Ground to outlet box.
3. Attach mounting to building structure with expansion anchors.
4. Fixtures shall not be dependent on the outlet box cover screws for support.
5. The use of tong-type hangers for suspending fluorescent fixtures is prohibited.

C. Surface Mounted Fixtures:
1. Attach to appropriate outlet box.
2. Attach to surface using fasteners and sealing washers when mounting fixture in damp or wet locations.

D. Boxes and Fixtures:
1. For units mounted against masonry or concrete walls, provide suitable 1/4 inch spacers to prevent mounting back of box directly against wall.
2. Bolt units rigidly to building with expansion anchors, toggle bolts, hangers, or Unistrut.
3. Do not install boxes with open conduit holes.
4. Cable each circuit and identify with tag.

E. Re-lamp all fluorescent fixtures provided under this Contract with new lamps following Substantial Completion.

F. Mount photocells as shown and adjust foot-candle setting for proper dusk and dawn photo-control. Provide wiring in conduit from photocell to controls.

END OF SECTION

THIS PAGE INTENTIONALLY LEFT BLANK

Table 1A
RW-20 Headloss at Maximum Flow,
Operable Unit 3 (Former Grumman Settling Ponds),
Northrop Grumman Systems Corporation,
Bethpage, NY.

ARCADIS Design & Consultancy for natural and built assets

Headloss - Well RW-20 (Maximum Flow)								
Pipe/Fittings [1], [6]	Material	H-W Roughness Coeff. C [7]	Design Flow (gpm)	Inside Diameter (in)	Pipe Length (ft)	Fitting Equiv. Length [5] (ft)	Fitting Quantity	Pressure Loss (psi)
From pump to well house:								
Check Valve	316 SS	140	700	5.76	-	90	1	1.59
Drop Pipe [2], [8]	304 SS	140	700	5.76	110	-	1	1.949
Pipe Couplings [2], [8], [9]	304 SS	140	700	5.76	-	2	10	0.354
Top Pipe Section [2], [8]	304 SS	140	700	5.76	2.5	-	1	0.044
From well house to treatment system:								
90° Elbow w/in WH	304 SS	140	700	5.76	-	12	1	0.213
Spool Piece	304 SS	140	700	5.76	2	-	1	0.035
90° Elbow	HDPE	150	700	5.798	-	22	2	0.665
Horizontal Pipe	HDPE	150	700	5.798	2	-	1	0.030
Check valve	304 SS	140	700	5.798	-	90	1	1.544
Horizontal Pipe	HDPE	150	700	5.798	2	-	1	0.030
Gate Valve	304 SS	140	700	5.798	-	3.2	2	0.110
Horizontal Pipe	HDPE	150	700	5.798	8	-	1	0.121
Gate Valve	HDPE	150	700	5.798	-	-	-	0.298
Horizontal Pipe	HDPE	150	700	5.798	2	-	1	0.030
90° Elbow [8]	HDPE	150	700	5.798	-	22	1	0.332
Horizontal Pipe	HDPE	150	700	5.798	4	-	1	0.060
90° Elbow [8]	HDPE	150	700	5.798	-	22	1	0.332
Horizontal Pipe	HDPE	150	700	5.798	10	-	1	0.151
45° Elbow [8]	HDPE	150	700	5.798	-	8.1	2	0.245
Horizontal Pipe [8]	HDPE	150	700	5.798	2000	-	1	30.207
90° Elbow [8]	HDPE	150	700	5.798	-	22	1	0.332
Vertical Pipe [8]	PVC	150	700	5.798	3	-	1	0.045
Butterfly Valve	PVC	150	700	5.798	-	-	-	0.298
Vertical Pipe [8]	PVC	150	700	5.798	6	-	1	0.091
Butterfly Valve	PVC	150	700	5.798	-	-	-	0.298
Vertical Pipe [8]	PVC	150	700	5.798	6	-	1	0.091
Check Valve	PVC	150	700	-	-	-	-	0.220
90° Elbow [8]	PVC	150	700	5.798	-	22	1	0.332
Horizontal Pipe	PVC	150	700	5.798	25	-	-	0.378
90° Elbow [8]	PVc	150	700	5.798	-	22	1	0.332
6"x8" Expander [2], [4]	SS	140	700	5.76	--	36.7	1	0.650
Sharp edged pipe exit [4], [8]	304 SS	140	1000	8	-	45.8	1	0.317
Total Losses (psi)								***41.73***
Total Friction Head Losses (ft.)								***96.39***
Friction Head Losses with Safety Factor of 1.2 (ft.)								***115.67***
Total Head Required (ft.) [10]								***190.67***

See footnotes on the next page

ARCADIS Design & Consultancy for natural and built assets

Notes:

(1) Pipe or Fitting is assumed to be flanged unless indicated otherwise.
(2) Screwed Fittings used for the equivalent length estimate.
(3) Values of Equivalent Length are based on Environmental Engineering Reference Manual for the PE Exam, 2nd Edition, 2003, Appendix A-35, unless otherwise specified.
(4) Equivalent Length value taken from Chemicalengineeringnow.com/EquivalentLengths.aspx
(5) For a bend of 11.25°, Equivalent Length of 45° elbow applied due to lack of Equivalent Length data.
(6) Headloss through valves assumes valves are in fully open position.
(7) Hazen-Williams Roughness Coefficient is based on a value listed in Environmental Engineering Reference Manual for the PE Exam, 2nd Edition, 2003, Appendix A-35, unless otherwise specified.
(8) Hazen-Williams Roughness Coefficient is based on a value listed in L.W.Mays, Water Resources Engineering, 2005.
(9) Equivalent length value taken from The Copper Tube Handbook: Table 7 (http://www.copper.org/publications/pub_list/pdf/copper_tube_handbook.pdf)
(10) Total head required includes friction head losses with safety factor and vertical pumping distance (assumes 60 feet from pump to influent pipe and 15 feet from influent pipe to air stripper influent).

Acronyms:

HDPE High Density Polyethylene
H-W Hazen-Williams
\- Not Available or Not Applicable
DI Ductile Iron
SS Stainless Steel
CS Carbon Steel
WH Wellhead
ABS Acrylonite Butadiene Styrene
GI Galvanized Iron

Hazen -Williams Friction Loss Formula:

$$DP = \frac{4.52 * q^{1.85}}{(c^{1.85} * d^{4.8655})} * L$$

c = design coefficient
L = length of pipe in feet
q = rate of flow in gallons per minute
d = inside diameter of pipe in inches

Table 1B
RW-21 Headloss at Maximum Flow,
Operable Unit 3 (Former Grumman Settling Ponds),
Northrop Grumman Systems Corporation,
Bethpage, NY.

ARCADIS Design & Consultancy for natural and built assets

Headloss - Well RW-21 (Maximum Flow)								
Pipe/Fittings [1], [6]	Material	H-W Roughness Coeff. C [7]	Design Flow (gpm)	Inside Diameter (in)	Pipe Length (ft)	Fitting Equiv. Length [3] (ft)	Fitting Quantity	Pressure Loss (psi)
From pump to well house:								
Check Valve	316 SS	140	700	5.76	-	90	1	1.59
Drop Pipe [2], [8]	304 SS	140	700	5.76	110	-	1	1.949
Pipe Couplings [2], [8], [9]	304 SS	140	700	5.76	-	2	10	0.354
From well house to treatment system:								
90° Elbow w/in WH	304 SS	140	700	5.76	-	12	1	0.213
Spool Piece	304 SS	140	700	5.76	2	-	1	0.035
6"x8" Expander [2], [4]	304 SS	140	700	5.76	--	36.7	1	0.650
Horizontal Pipe	HDPE	150	700	7.55	2	-	1	0.008
Check valve	304 SS	140	700	7.55	-	90	1	0.427
Horizontal Pipe	HDPE	150	700	7.55	2	-	1	0.008
Gate Valve	304 SS	140	700	7.55	-	3.2	2	0.030
Horizontal Pipe	HDPE	150	700	7.55	8	-	1	0.033
Gate Valve	HDPE	150	700	7.55	-	-	-	0.043
Horizontal Pipe [8]	HDPE	150	700	7.55	3500	-	1	14.629
6"x8" Expander [2], [4]	HDPE	150	700	5.76	--	36.7	1	0.572
90° Elbow [8]	HDPE	150	700	5.76	-	22	5	1.715
Vertical Pipe [8]	PVC	150	700	5.761	3	-	1	0.047
Gate Valve	PVC	150	700	5.761	-	-	-	0.298
Vertical Pipe [8]	PVC	150	700	5.761	6	-	1	0.093
Butterfly Valve	PVC	150	700	5.761	-	-	-	0.082
Horizontal Pipe [8]	PVC	150	700	5.761	20	-	1	0.312
Butterfly Valve	PVC	150	700	5.761	-	-	2	0.595
Vertical Pipe [8]	PVC	150	700	5.761	6	-	1	0.093
Check Valve	PVC	150	700	5.761	-	-	2	0.441
90° Elbow [8]	PVC	150	700	5.761	-	22	1	0.343
Horizontal Pipe	PVC	150	700	5.761	20	-	-	0.312
90° Elbow [8]	PVC	150	700	5.761	-	22	1	0.343
6"x8" Expander [2], [4]	SS	140	700	5.76	--	36.7	1	0.650
Sharp edged pipe exit [4], [8]	304 SS	140	1000	8	-	45.8	1	0.317
Total Losses (psi)								***26.19***
Total Friction Head Losses (ft.)								***60.50***
Friction Head Losses with Safety Factor of 1.2 (ft.)								***72.60***
Total Head Required (ft.) [10]								***147.60***

See footnotes on the next page

Notes:

(1) Pipe or fitting is assumed to be flanged unless indicated otherwise.
(2) Screwed Fittings used for the equivalent length estimate.
(3) Values of Equivalent Length are based on Environmental Engineering Reference Manual for the PE Exam, 2nd Edition, 2003, Appendix A-35, unless otherwise specified.
(4) Equivalent Length value taken from Chemicalengineeringnow.com/EquivalentLengths.aspx
(5) For a bend of 11.25°, Equivalent Length of 45° elbow applied due to lack of Equivalent Length data.
(6) Headloss through valves assumes valves are in fully open position.
(7) Hazen-Williams Roughness Coefficient is based on a value listed in Environmental Engineering Reference Manual for the PE Exam, 2nd Edition, 2003, Appendix A-35, unless otherwise specified.
(8) Hazen-Williams Roughness Coefficient is based on a value listed in L.W.Mays, Water Resources Engineering, 2005.
(9) Equivalent length value taken from The Copper Tube Handbook: Table 7 (http://www.copper.org/publications/pub_list/pdf/copper_tube_handbook.pdf)
(10) Total head required includes friction head losses with safety factor and vertical pumping distance (assumes 60 feet from pump to influent pipe and 15 feet from influent pipe to air stripper influent).

Acronyms:

HDPE High Density Polyethylene
H-W Hazen-Williams
\- Not Available or Not Applicable
DI Ductile Iron
SS Stainless Steel
CS Carbon Steel
WH Wellhead
ABS Acrylonite Butadiene Styrene
GI Galvanized Iron

Hazen -Williams Friction Loss Formula:

$$DP = \frac{4.52 * q^{1.85}}{(c^{1.85} * d^{4.8655})} * L$$

c = design coefficient
L = length of pipe in feet
q = rate of flow in gallons per minute
d = inside diameter of pipe in inches

Table 1C
RW-22 Headloss at Maximum Flow,
Operable Unit 3 (Former Grumman Settling Ponds),
Northrop Grumman Systems Corporation,
Bethpage, NY.

ARCADIS Design & Consultancy for natural and built assets

Headloss - Well RW-22 (Maximum Flow)								
Pipe/Fittings [1], [6]	Material	H-W Roughness Coeff. C [7]	Design Flow (gpm)	Inside Diameter (in)	Pipe Length (ft)	Fitting Equiv. Length [3] (ft)	Fitting Quantity	Pressure Loss (psi)
From pump to well house:								
Check Valve	316 SS	140	700	5.76	-	90	1	1.59
Drop Pipe [2], [8]	304 SS	140	700	5.76	110	-	1	1.949
Pipe Couplings [2], [8], [9]	304 SS	140	700	5.76	-	2	10	0.354
Top Pipe Section [2], [8]	304 SS	140	700	5.76	2.5	-	1	0.044
From well house to treatment system:								
90° Elbow w/in WH	304 SS	140	700	5.76	-	12	1	0.213
Spool Piece	304 SS	140	700	5.76	2	-	1	0.035
90° Elbow	HDPE	150	700	5.798	-	22	2	0.665
Horizontal Pipe	HDPE	150	700	5.798	2	-	1	0.030
Check valve	304 SS	140	700	5.76	-	90	1	1.595
Horizontal Pipe	HDPE	150	700	5.798	2	-	1	0.030
Gate Valve	304 SS	140	700	5.798	-	3.2	2	0.110
Horizontal Pipe	HDPE	150	700	5.798	8	-	1	0.121
Gate Valve	HDPE	150	700	5.798	-	-	-	0.184
Horizontal Pipe [8]	HDPE	150	700	5.798	530	-	1	8.005
90° Elbow [8]	HDPE	150	700	5.761	-	22	1	0.343
Vertical Pipe [8]	PVC	150	700	5.761	3	-	1	0.047
Gate Valve	PVC	150	700	5.761	-	-	-	0.184
Vertical Pipe [8]	PVC	150	700	5.761	6	-	1	0.093
Gate Valve	PVC	150	700	5.761	-	-	-	0.184
Vertical Pipe [8]	PVC	150	700	5.761	6	-	1	0.093
Check Valve	PVC	150	700	-	-	-	-	0.220
90° Elbow [8]	PVC	150	700	5.761	-	22	1	0.343
Horizontal Pipe	PVC	150	700	5.761	25	-	-	0.390
90° Elbow [8]	PVC	150	700	5.761	-	22	1	0.343
6"x8" Expander [2], [4]	SS	140	600	5.76	--	36.7	1	0.489
Sharp edged pipe exit [4], [8]	304 SS	140	1000	8	-	45.8	1	0.317
Total Losses (psi)								***17.97***
Total Friction Head Losses (ft.)								***41.52***
Friction Head Losses with Safety Factor of 1.2 (ft.)								***49.83***
Total Head Required (ft.) [10]								***124.83***

See footnotes on the next page

Notes:

(1) Pipe or Fitting is assumed to be flanged unless indicated otherwise.
(2) Screwed Fittings used for the equivalent length estimate.
(3) Values of Equivalent Length are based on Environmental Engineering Reference Manual for the PE Exam, 2nd Edition, 2003, Appendix A-35, unless otherwise specified.
(4) Equivalent Length value taken from Chemicalengineeringnow.com/EquivalentLengths.aspx
(5) For a bend of 11.25°, Equivalent Length of 45° elbow applied due to lack of Equivalent Length data.
(6) Headloss through valves assumes valves are in fully open position.
(7) Hazen-Williams Roughness Coefficient is based on a value listed in Environmental Engineering Reference Manual for the PE Exam, 2nd Edition, 2003, Appendix A-35, unless otherwise specified.
(8) Hazen-Williams Roughness Coefficient is based on a value listed in L.W.Mays, Water Resources Engineering, 2005.
(9) Equivalent length value taken from The Copper Tube Handbook: Table 7 (http://www.copper.org/publications/pub_list/pdf/copper_tube_handbook.pdf)
(10) Total head required includes friction head losses with safety factor and vertical pumping distance (assumes 60 feet from pump to influent pipe and 15 feet from influent pipe to air stripper influent).

Acronyms:

HDPE High Density Polyethylene
H-W Hazen-Williams
\- Not Available or Not Applicable
DI Ductile Iron
SS Stainless Steel
CS Carbon Steel
WH Wellhead
ABS Acrylonite Butadiene Styrene
GI Galvanized Iron

Hazen -Williams Friction Loss Formula:

$$DP = \frac{4.52 * q^{1.85}}{(c^{1.85} * d^{4.8655})} * L$$

c = design coefficient
L = length of pipe in feet
q = rate of flow in gallons per minute
d = inside diameter of pipe in inches

Table 1D
GM-38 Effluent Headloss at Maximum Flow,
Operable Unit 3 (Former Grumman Settling Ponds),
Northrop Grumman Systems Corporation,
Bethpage, NY.

ARCADIS Design & Consultancy for natural and built assets

Headloss - Effluent (Maximum Flow)								
Pipe/Fittings [1], [6]	Material	H-W Roughness Coeff. C [7]	Design Flow (gpm)	Inside Diameter (in)	Pipe Length (ft)	Fitting Equiv. Length [9] (ft)	Fitting Quantity	Pressure Loss (psi)
From pump to basin:								
Vertical Pipe [8]	PVC	150	2000	5.761	10	-	-	1.087
90° Elbow [8]	PVC	150	2000	5.761	-	22	1	2.391
Butterfly Valve	PVC	150	2000	5.761	-	-	-	2.041
Check Valve	PVC	150	2000	-	-	-	-	0.952
90° Elbow [8]	PVC	150	2000	5.761	-	22	1	2.391
6"x10" Expander [2], [4]	PVC	150	2000	5.76	--	27.5	1	2.991
Tee (Branch Flow) [8]	PVC	150	2000	8.679	-	57	1	0.843
Horizontal Pipe	PVC	150	2000	8.679	15	-	-	0.222
90° Elbow [8]	PVC	150	2000	8.679	-	22	1	0.326
Vertical Pipe [8]	PVC	150	2000	8.679	8	-	-	0.118
Vertical Pipe [8]	HDPE	150	2000	9.41	4	-	-	0.040
90° Elbow [8]	HDPE	150	2000	9.41	-	22	1	0.220
Horizontal Pipe [8]	HDPE	150	2000	9.41	800	-	-	7.987
Sharp edged pipe exit [4], [8]	HDPE	150	2000	9.41	-	45.8	1	0.457
Total Losses (psi)								***22.06***
Total Friction Head Losses (ft.)								***50.97***
Friction Head Losses with Safety Factor of 1.2 (ft.)								***61.16***
Total Head Required (ft.) [10]								***71.16***

See footnotes on the next page

Table 1D
GM-38 Effluent Headloss at Maximum Flow,
Operable Unit 3 (Former Grumman Settling Ponds),
Northrop Grumman Systems Corporation,
Bethpage, NY.

ARCADIS Design & Consultancy for natural and built assets

Notes:

(1) Pipe or Fitting is assumed to be flanged unless indicated otherwise.
(2) Screwed Fittings used for the equivalent length estimate.
(3) Values of Equivalent Length are based on Environmental Engineering Reference Manual for the PE Exam, 2nd Edition, 2003, Appendix A-35, unless otherwise specified.
(4) Equivalent Length value taken from Chemicalengineeringnow.com/EquivalentLengths.aspx
(5) For a bend of 11.25°, Equivalent Length of 45° elbow applied due to lack of Equivalent Length data.
(6) Headloss through valves assumes valves are in fully open position.
(7) Hazen-Williams Roughness Coefficient is based on a value listed in Environmental Engineering Reference Manual for the PE Exam, 2nd Edition, 2003, Appendix A-35, unless otherwise specified.
(8) Hazen-Williams Roughness Coefficient is based on a value listed in L.W.Mays, Water Resources Engineering, 2005.
(9) Equivalent length value taken from The Copper Tube Handbook: Table 7 (http://www.copper.org/publications/pub_list/pdf/copper_tube_handbook.pdf)
(10) Total head required includes friction head losses with safety factor and vertical pumping distance (assumes 10 feet from transfer pumps to discharge piping).

Acronyms:

HDPE High Density Polyethylene
H-W Hazen-Williams
\- Not Available or Not Applicable
DI Ductile Iron
SS Stainless Steel
CS Carbon Steel
WH Wellhead
ABS Acrylonite Butadiene Styrene
GI Galvanized Iron

Hazen -Williams Friction Loss Formula:

$$DP = \frac{4.52 * q^{1.85}}{(c^{1.85} * d^{4.8655})} * L$$

c = design coefficient
L = length of pipe in feet
q = rate of flow in gallons per minute
d = inside diameter of pipe in inches

Permits, Access Agreements, and Authorizations for the RW-21 Project Area
Northrop Grumman Systems Corporation
Operable Unit 3 (Former Grumman Settling Ponds),
Bethpage, New York.

ARCADIS Design & Consultancy for natural and built assets

Required Permits [1]	Authority	Comments
Well Permit	TOB	All well permits have been obtained from TOB Highway Department for MWs and RWs, with the exception of RW-20.
Road Opening Permit	TOB	Permit obtained for all VPBs, MWs, and RWs, with the exception of RW-20. Permits are required for well vaults and conveyance piping as per TOB Highway Department.
Building Permit	TOB	Permit for treatment system building from TOB Building Department will be contingent on NYSDEC review and approval of design documents.
Electrical Permit	TOB	Permits required for well vaults and treatment system building as per TOB Building Department.
Plumbing Permit	TOB	Permit required for treatment system building as per TOB Building Department.
Exempted Permits [2]	**Authority**	**Comments**
Air Discharge Permit	NYSDEC	Assumes Air Discharge Permit exempted for Equivalency as per statutes in DER-10 Section 1, Subsection 10.
SPDES Permit	NYSDEC	Assumes SPDES Permit exempted for Equivalency as per statutes in DER-10 Section 1, Subsection 10.
Water Withdrawal Permit	NYSDEC	Assumes Water Withdrawal Permit exempted as per statutes in DER-10 Section 1, Subsection 10.
Access Agreements [3]	**Authority**	**Comments**
VPBs and Monitoring Wells	TOB	Access agreements have been obtained for all VPBs and MWs.
Remedial Wells RW-20, RW-21, RW-22	TOB	Access agreements have been obtained for RW-21, and RW-22 . Access agreement required for RW-20, contingent on TOB approval.
Remedial Well Vaults for RW-20, RW-21, RW-22	TOB	Access agreements are required for RW-20, RW-21, and RW-22 well vaults.
Remedial Well RW-22	PSEGLI	Access agreement has been obtained for RW-22.
Conveyance Pipelines	TOB	Access agreement will needed to be obtained for RW-20, RW-21 and RW-22 conveyance pipelines.
Conveyance Pipelines	NC	Access agreement will needed to be obtained for RW-20, RW-21 and RW-22 conveyance pipelines.

Notes and abbreviations on last page.

ARCADIS Design & Consultancy for natural and built assets

Access Agreements [a]	Authority	Comments
Conveyance Pipelines	PSEGLI	Access agreement will needed to be obtained for RW-20, RW-21 and RW-22 conveyance pipelines.
Conveyance Pipelines	Private Properties	Access agreements may be needed for the RW-21 conveyance pipeline with applicable privately-owned properties.
Discharge Basin	TOB	Access agreement will be needed for evaluation of installation of additional recharge basin.
Discharge Basin	NC	Access agreement will be needed for evaluation of NC owned Arthur Avenue Basin to determine basin capacity to accommodate higher flow rates.
Treatment System	TOB	Access agreement will be needed for the treatment system with TOB.
Treatment System	NC	Access agreement will be needed for the treatment system with NC.
Treatment System	Private Properties	Access agreement will be needed for the treatment system with applicable private property-owners.
Required Authorizations	**Authority**	**Comments**
Treatment System Construction	Navy	Authorization for addition to existing treatment system (GM-38) will be required from Navy. Proposed work in the area would on-site trenching and associated piping, a new building, and carbon units.
Discharge to NC POTW	NC	Authorization for discharge of groundwater generated during development of RWs and MWs to NC owned sanitary sewer system.
Discharge to Recharge Basin	NC	Authorization for discharge of treated effluent to NC owned Arthur Avenue Basin.

Notes and abbreviations on last page.

Notes and Abbreviations:

DER-10	NYSDEC Technical Guidance for Site Investigation and Remediation
MW	monitoring well
NC	Nassau County
NYSDEC	New York State Department of Environmental Conservation
POTW	Publicly Owned Treatment Works
PSEGLI	Public Service Electric and Gas of Long Island
RW	remedial well
TOB	Town of Oyster Bay
VPB	Vertical Profile Boring

1. NYSDEC may exempt these permits if the remedial program meets certain criteria as defined in DER-10 Section 1, Subsection 10.
2. NYSDEC may exempt these permits if the remedial program meets certain criteria as defined in DER-10 Section 1, Subsection 10 and it is assumed the permit exemptions will be granted.
3. An environmental easement will be required and will be coordinated with access agreements.

TREATMENT BUILDING LOAD SCHEDULE

LOAD/DEVICE	VOLTAGE	PHASE	HP/kW	LOAD AMPS 480V	CONNECTED KVA
Blower A	480	3	100.00	124.0	103.09
Blower B	480	3	100.00	124.0	103.09
Transfer Pump A	480	3	25.00	34.0	28.27
Transfer Pump B	480	3	25.00	34.0	28.27
Unit Heater 1	480	3	35.00	42.0	34.92
Unit Heater 2	480	3	35.00	42.0	34.92
Unit Heater 3	480	3	35.00	42.0	34.92
Unit Heater 4	480	3	35.00	42.0	34.92
RW-22 Vault (40 HP Plus Xfmr Loads)	480	3	Summa.	65.00	54.04
XFMR-1	480	3	30 kVA	36.00	29.93
Future Expansion	480	3	152 kW	181.00	150.48
				Total KVA	**636.84**
				AMPS (@480V)	**766.35**

PRIVILEGED AND CONFIDENTIAL
ATTORNEY/CLIENT COMMUNICATION
AND/OR ATTORNEY WORK PRODUCT
SUBJECT TO ATTORNEY-CLIENT PRIVILEGE

ARCADIS Design & Consultancy for natural and built assets

Achieve capture of 90% VOC mass discharge through groundwater pump-and-treat with recharge basin plus enhanced mass removal in zone of highest VOC mass discharge.
Includes:
- *Installation of new recovery well RW-20, screened from approximately 550 to 600 ft bgs, in subgrade vault on Nassau County property approximately 200 ft northeast of the intersection of Broadway and Central.*
- *Installation of new recovery well RW-21, screened from approximately 650 to 700 ft bgs, in subgrade vault near the intersection of Williams Street and Broadway.*
- *Installation of new recovery well RW-22, screened from approximately 700 to 750 ft bgs, in subgrade vault near the Arthur Avenue recharge basin.*
- *Installation of twenty-one new monitoring wells, installed in pairs. Monitoring wells constructed of schedule 80 PVC, with 20 feet of stainless steel screen and 5 foot stainless steel sump.*
- *Transfer of water (1500 gpm) via subgrade, dual walled pipe to new remediation system, installed as part of expansion to Navy's GM-38 system.*
- *Discharge of treated effluent (1500 gpm) to Arthur Avenue Recharge Basin via existing GM-38 system discharge pipeline.*
- *RW-20 and RW-21 operate full time for 25 years and pulsed operation for 5 years (30 years).*
- *RW-22 operates full time for 8 years.*
- *Assumes BWD Wells 4-1, 4-2, and 5-1 operate as public supply wells full time for 30 years.*
- *Assumes wells, pipelines, and treatment system locations will be approved by all stakeholders.*
- *Assumes non-union, one-shift labor.*
- *All costs provided herein are presented in 2016 dollars.*

Description	Quantity	Units	Unit Cost ($)	Total Cost ($) (1)(2)	Comments
Construction Capital Costs					
Recovery and Monitoring Wells (2016)					
Well Installation					
Recovery Well RW-20	1	ea	$452,702	$453,000	Subcontractor cost (including reverse rotary installation, includes mobe/demobe, surface casing, soil sampling) and geologist oversight and ODCs.
Recovery Well RW-21	1	ea	$407,431	$407,000	Subcontractor cost (including reverse rotary installation, includes mobe/demobe, surface casing, soil sampling) and geologist oversight and ODCs.
Recovery Well RW-22	1	ea	$497,972	$498,000	Subcontractor cost (including reverse rotary installation, includes mobe/demobe, surface casing, soil sampling) and geologist oversight and ODCs.
Vertical Profile Borings	4	ea	$152,053	$608,000	Subcontractor cost (including reverse rotary installation, includes mobe/demobe, surface casing, vertical profile boring) and geologist oversight and ODCs.
Well Testing					
Recovery Well	3	ea	$7,829	$23,000	Subcontractor cost, geologist oversight and ODCs for 12-hour pump test.
Well Development					
Recovery Well	3	ea	$35,684	$107,000	Subcontractor cost, geologist oversight and ODCs for well development.
Waste Management					
Recovery Well	3	ea	$91,042	$273,000	Waste characterization sampling, handling, and disposal for well soil cuttings, development water, and pump test water.
Recovery and Monitoring Wells (2017)					
Well Installation					
Monitoring Well up to 700 ft bls	21	ea	$80,800	$1,697,000	Subcontractor costs (mud rotary, includes mobe/demobe and surface casing) and geologist oversight and ODCs.
Well Development					
Recovery Well	3	ea	$35,684	$107,000	Subcontractor cost, geologist oversight and ODCs for well development.
Monitoring Well	21	ea	$34,269	$720,000	Subcontractor cost, geologist oversight and ODCs for well development.
Waste Management					
Recovery Well	3	ea	$30,000	$90,000	Waste characterization sampling, handling, and disposal for well soil cuttings, development water, and pump test water.
Monitoring Well	21	ea	$22,659	$476,000	Waste characterization sampling, handling, and disposal for well soil cuttings, drilling fluid and development water.
			Subtotal	**$2,369,000**	

continued on following page.

PRIVILEGED AND CONFIDENTIAL
ATTORNEY/CLIENT COMMUNICATION
AND/OR ATTORNEY WORK PRODUCT
SUBJECT TO ATTORNEY-CLIENT PRIVILEGE

ARCADIS Design & Consultancy for natural and built assets

Description	Quantity	Units	Unit Cost ($)	Total Cost ($) [1][2]	Comments
Recovery Well Pumping System - Phase I					
Recovery Well Vault - Structural	4	weeks			Excavation and installation of recovery well vault
Recovery Well Vault - Mechanical	0	weeks			Set pump, motor, drop pipe and appurtenances and vault mechanical.
Recovery Well Vault - Electrical	0	weeks			Install conduit from pole, pull wire, and install panels
Piping through Residential	3	weeks			Assume 100 feet per day through residential areas for directional drilling and pressure testing
Piping through ROW	0	weeks			Assume 200 feet per day through undeveloped ROW areas for directional drilling and pressure testing
Site restoration	1	weeks			Sidewalks, streets and apron restoration
Contractor mobilization/demobilization	1	ls	$69,700	$70,000	
Town permits	0	ls	$1,000	$0	Permit fees included in miscellaenous project costs.
Site Utility Survey	3	day	$6,750	$20,000	Subcontracting utility locating firm, including air knifing. Assumes 1 day every 15 business days during construction.
Precondition Survey	1	weeks	$5,500	$6,000	Survey of existing site conditions, including CAD drawings.
Site Preparation	3	day	$3,500	$11,000	Engineering estimate for clearing heavy vegetation.
Wellhead Vault Structural					Clearing, excavation, and installation of precast concrete vault in Town ROW
RW-20					
Excavation	1	ea	$8,300	$8,000	Excavation to install well vault
Sheeting/Shoring	56	lf	$25	$1,000	Sheeting/shoring for stability during excavation
Material Disposal	41	cy	$65	$3,000	Disposal of excavation spoils offsite
Sub-Base Backfill, Compaction and Testing	2	cy	$1,090	$2,000	
Vault Installation	1	ea	$5,750	$6,000	
On-Site Reuse Select Fill Backfill and Compaction	5	cy	$285	$1,000	Reuse select fill for backfill
Off-Site Select Fill Backfill, Compaction and Testing	5	cy	$535	$3,000	Compaction and testing of select fill for backfill
Concrete Curb Restoration	20	lf	$39	$1,000	Remove, dispose of and restore concrete curb
Concrete Sidewalk Restoration	80	sf	$12	$1,000	Remove, dispose of and restore 4 inch concrete sidewalk
Asphalt Restoration	12	sf	$19	$0	Remove, dispose of and restore asphalt
C&D Disposal	9	tons	$56	$0	
RW-21					
Excavation	1	ea	$8,300	$8,000	Excavation to install well vault
Sheeting/Shoring	56	lf	$25	$1,000	Sheeting/shoring for stability during excavation
Material Disposal	44	cy	$65	$3,000	Disposal of excavation spoils offsite
Sub-Base Backfill, Compaction and Testing	2	cy	$1,090	$2,000	
Vault Installation	1	ea	$5,750	$6,000	
On-Site Reuse Select Fill Backfill and Compaction	8	cy	$285	$2,000	Reuse select fill for backfill
Off-Site Select Fill Backfill, Compaction and Testing	8	cy	$535	$4,000	Compaction and testing of select fill for backfill
Concrete Curb Restoration	40	lf	$39	$2,000	Remove, dispose of and restore concrete curb
Concrete Sidewalk Restoration	80	sf	$12	$1,000	Remove, dispose of and restore 4 inch concrete sidewalk
Asphalt Restoration	100	sf	$19	$2,000	Remove, dispose of and restore asphalt
C&D Disposal	9	tons	$56	$0	
RW-22					
Excavation	1	ea	$11,300	$11,000	Excavation to install well vault
Material Disposal	45	cy	$65	$3,000	Disposal of excavation spoils offsite
Sub-Base Backfill, Compaction and Testing	2	cy	$1,090	$2,000	
Vault Installation	1	ea	$5,750	$6,000	
On-Site Reuse Select Fill Backfill and Compaction	9	cy	$285	$3,000	Reuse select fill for backfill
Off-Site Select Fill Backfill, Compaction and Testing	9	cy	$535	$5,000	Compaction and testing of select fill for backfill
Grass Removal/Restoration	100	sf	$3	$0	Remove, dispose of and restore grass area
Trenching and Pipe Work					
Influent Pipeline Leak Detection Ports and Vaults- 6"	2	ea	$379	$1,000	Leak protection ports every 500 feet. 6"x10" SDR 17x17 Dual-walled HDPE
Influent Pipeline Leak Detection Ports and Vaults- 8"	2	ea	$439	$1,000	Leak protection ports every 500 feet. 8"x12" SDR 17x17 Dual-walled HDPE
RW-20					
Excavation	1	ea	$29,475	$29,000	Exacavation for pipe installation
Sheeting/Shoring	1410	lf	$5	$7,000	Sheeting/shoring for stability during trench excavation
Material Disposal	222	cy	$65	$14,000	Disposal of excavation spoils offsite
Pipe Installation	705	lf	$35	$25,000	10-inch diameter dual-wall HDPE from recovery well to GM-38 area, including backfill and compaction

PRIVILEGED AND CONFIDENTIAL
ATTORNEY/CLIENT COMMUNICATION
AND/OR ATTORNEY WORK PRODUCT
SUBJECT TO ATTORNEY-CLIENT PRIVILEGE

ARCADIS Design & Consultancy for natural and built assets

Description	Quantity	Units	Unit Cost ($)	Total Cost ($) [1][2]	Comments
Pipe Bedding Backfill, Compaction and Testing	118	cy	$145	$17,000	
On-Site Reuse Select Fill Backfill and Compaction	65	cy	$65	$4,000	Reuse select fill for backfill
Off-Site Select Fill Backfill, Compaction and Testing	65	cy	$170	$11,000	Compaction and testing of select fill for backfill
Sub-Base Backfill, Compaction and Testing	26	cy	$375	$10,000	
Concrete Curb Restoration	50	lf	$39	$2,000	Remove, dispose of and restore concrete curb
Concrete Sidewalk Restoration	200	sf	$12	$2,000	Remove, dispose of and restore 4 inch concrete sidewalk
Temporary Trench Restoration	2115	sf	$3	$5,000	Remove, dispose of and cold patch asphalt
Permanent Asphalt Restoration	4935	sf	$19	$92,000	Restore permanent asphalt
C&D Disposal	181	tons	$56	$10,000	
RW-21					
Excavation	1	ea	$29,475	$29,000	Excacavation for pipe installation
Sheeting/Shoring	1420	lf	$5	$7,000	Sheeting/shoring for stability during trench excavation
Material Disposal	224	cy	$65	$15,000	Disposal of excavation spoils offsite
Pipe Installation	710	lf	$35	$25,000	10-inch diameter double-wall HDPE from recovery well to GM-38 area, including backfill and compaction
Pipe Bedding Backfill, Compaction and Testing	114	cy	$145	$17,000	
On-Site Reuse Select Fill Backfill and Compaction	66	cy	$65	$4,000	Reuse select fill for backfill
Off-Site Select Fill Backfill, Compaction and Testing	66	cy	$170	$11,000	Compaction and testing of select fill for backfill
Sub-Base Backfill, Compaction and Testing	26	cy	$375	$10,000	
Concrete Curb Restoration	50	lf	$39	$2,000	Remove, dispose of and restore concrete curb
Concrete Sidewalk Restoration	200	sf	$12	$2,000	Remove, dispose of and restore 4 inch concrete sidewalk
Temporary Trench Restoration	2130	sf	$3	$5,000	Remove, dispose of and cold patch asphalt
Permanent Asphalt Restoration	4970	sf	$19	$93,000	Restore permanent asphalt
C&D Disposal	182	tons	$56	$10,000	
Traffic Control/H&S Program	8	weeks	$4,455	$36,000	One laborer to direct and control traffic and perform health and safety monitoring in the work area
Construction Oversight	8	weeks	$6,105	$49,000	One senior technician to provide full-time field construction management for project duration
Travel and per diem for Senior CM Technician	8	weeks	$1,479	$12,000	Per diem lodging, M&IE, field truck, tolls and 4 hours weekly travel to/from site
Community Air Monitoring Program	8	weeks	$700	$6,000	Implementation of CAMP for the excavation, installation, and backfilling of the vault and pipeline
Unit Billing for All On-Site Personnel	8	weeks	$744	$6,000	Level D PPE (3) and one field truck (second field truck included with Senior CM travel/per diem)
As-built Survey	2	weeks	$5,500	$11,000	Engineering estimate for as-built utility survey and elevations of recovery well, vault and pipeline.
Pressure testing	6	ea	$2,075	$12,000	Two laborers to conduct pneumatic pressure testing of containment pipe and hydraulic testing of carrier pipe, including ODCs, equipment rental, and parts. Assumes testing of total length of RW-20 and RW-21 pipelines.
Recovery Well Pumping System - Phase II					
Recovery Well Vault - Structural	0	weeks			Excavation and installation of recovery well vault
Recovery Well Vault - Mechanical	4.5	weeks			Set pump, motor, drop pipe and appurtenances and vault mechanical
Recovery Well Vault - Electrical	4.5	weeks			Install conduit from pole, pull wire, and install panels
Piping through Residential	2	weeks			Assume 100 feet per day through residential areas for directional drilling and pressure testing
Piping through ROW	3	weeks			Assume 200 feet per day through undeveloped ROW areas for directional drilling and pressure testing
Site restoration	3	weeks			Sidewalks, streets and apron restoration
Contractor mobilization/demobilization	1	ls	$69,700	$70,000	
Town permits	0	ls	$1,000	$0	Permit fees included in miscellaeneous project costs.
Site Utility Survey	5	day	$5,000	$25,000	Subcontracting utility locating firm, including air knifing. Assumes 1 day every 15 business days during construction.
Precondition Survey	1	weeks	$10,767	$11,000	Survey of existing site conditions, including CAD drawings.
Site Preparation	3	day	$3,500	$11,000	Engineering estimate for clearing heavy vegetation.
Trenching and Pipe Work					
Influent Pipeline Leak Detection Ports and Vaults- 6"	4	ea	$379	$2,000	Leak protection ports every 500 feet. 6"x10" SDR 17x17 Dual-walled HDPE
Influent Pipeline Leak Detection Ports and Vaults- 8"	4	ea	$439	$2,000	Leak protection ports every 500 feet. 8"x12" SDR 17x17 Dual-walled HDPE
RW-20					
Excavation	1	ea	$61,688	$62,000	Excacavation for pipe installation
Sheeting/Shoring	2350	lf	$5	$12,000	Sheeting/shoring for stability during trench excavation

PRIVILEGED AND CONFIDENTIAL
ATTORNEY/CLIENT COMMUNICATION
AND/OR ATTORNEY WORK PRODUCT
SUBJECT TO ATTORNEY-CLIENT PRIVILEGE

ARCADIS Design & Consultancy for natural and built assets

Description	Quantity	Units	Unit Cost ($)	Total Cost ($) [1][2]	Comments
Material Disposal	462	cy	$65	$30,000	Disposal of excavation spoils offsite
Pipe Installation	1175	lf	$35	$41,000	Prefabricated HDPE 6" carrier pipe with 10" containment pipe from RW-20 to GM-38 area. Prefabricated pipe selected to reduce potential impacts to the community and increase public and regulatory perception
Pipe Bedding Backfill, Compaction and Testing	240	cy	$145	$35,000	
On-Site Reuse Select Fill Backfill and Compaction	135	cy	$65	$9,000	Reuse select fill for backfill
Off-Site Select Fill Backfill, Compaction and Testing	135	cy	$170	$23,000	Compaction and testing of select fill for backfill
Sub-Base Backfill, Compaction and Testing	54	cy	$375	$20,000	
Grass Removal/Restoration	11750	sf	$3	$35,000	Remove, dispose of and restore grass area
C&D Disposal	1322	tons	$56	$74,000	
RW-21					
Excavation	1	ea	$60,900	$61,000	Excavation for pipe installation (1450' of trench not shared with RW-20 pipeline)
Sheeting/Shoring	2900	lf	$5	$15,000	Sheeting/shoring for stability during trench excavation
Material Disposal	456	cy	$65	$30,000	Disposal of excavation spoils offsite
Pipe Installation	2625	lf	$35	$92,000	Prefabricated HDPE 6" carrier pipe with 10" containment pipe from RW-21 to GM-38 area. Prefabricated pipe selected to reduce potential impacts to the community and increase public and regulatory perception
Pipe Bedding Backfill, Compaction and Testing	252	cy	$145	$37,000	
On-Site Reuse Select Fill Backfill and Compaction	142	cy	$65	$9,000	Reuse select fill for backfill
Off-Site Select Fill Backfill, Compaction and Testing	142	cy	$170	$24,000	Compaction and testing of select fill for backfill
Sub-Base Backfill, Compaction and Testing	56	cy	$375	$21,000	
Grass Removal/Restoration	14500	sf	$3	$44,000	Remove, dispose of and restore grass area
C&D Disposal	1305	tons	$56	$73,000	
RW-22					
Excavation	1	ea	$24,150	$24,000	Exacavation for pipe installation
Sheeting/Shoring	1150	lf	$5	$6,000	Sheeting/shoring for stability during trench excavation
Material Disposal	181	cy	$65	$12,000	Disposal of excavation spoils offsite
Pipe Installation	575	lf	$35	$20,000	Prefabricated HDPE 6" carrier pipe with 10" containment pipe from RW-22 to GM-38 area. Prefabricated pipe selected to reduce potential impacts to the community and increase public and regulatory perception
Pipe Bedding Backfill, Compaction and Testing	94	cy	$145	$14,000	
On-Site Reuse Select Fill Backfill and Compaction	53	cy	$65	$3,000	Reuse select fill for backfill
Off-Site Select Fill Backfill, Compaction and Testing	53	cy	$170	$9,000	Compaction and testing of select fill for backfill
Sub-Base Backfill, Compaction and Testing	21	cy	$375	$8,000	
Grass Removal/Restoration	5750	sf	$3	$17,000	Remove, dispose of and restore grass area
C&D Disposal	518	tons	$56	$29,000	
Recovery Pump, In-Well Drop Pipe and Vault Mechanical					
RW-20					
Recovery Pump	1	ea	$4,497	$5,000	Grundfos Model 625S500-3AA
Motor	1	ea	$4,334	$5,000	Franklin Electric Model 2366184025
In-Well Drop Pipe	11	ea	$852	$10,000	
Sump Pump	1	ea	$375	$1,000	
6" SS-SCH40	6	lf	$320	$2,000	Thick-Wall 316/316L Stainless Steel Unthreaded Pipe, 1-1/2 Pipe Size x 6' Length - McMaster-Carr
6" Check Valve	1	ea	$2,000	$2,000	
6" Gate Valve	1	ea	$2,500	$2,500	
6" Actuated Valve	1	ea	$4,000	$4,000	
1-1/2" SS-SCH80	6	lf	$320	$2,000	Thick-Wall 316/316L Stainless Steel Unthreaded Pipe, 1-1/2 Pipe Size x 6' Length - McMaster-Carr
1-1/2" Ball Valve	3	ea	$43	$129	Brass Ball Valve, 1-1/2" NPT Female Connections - McMaster-Carr
1-1/2" Check Valve	2	ea	$323	$1,000	Stainless Steel Check Valve, PTFE Seal, Medium-Pressure, 1-1/2 NPT Female
1" SS-SCH80	6	lf	$232	$2,000	Thick-Wall 304/304L Stainless Steel Unthreaded Pipe, 1 Pipe Size x 6' Length - McMaster-Carr
1" Ball Valve	2	ea	$21	$43	Brass Ball Valve, 1" NPT Female Connections - McMaster-Carr
RW-21					
Recovery Pump	1	ea	$3,149	$4,000	Grundfos Model 625S400-2
Motor	1	ea	$4,895	$5,000	Franklin Electric Model 2366174025
In-Well Drop Pipe	11	ea	$852	$10,000	
Sump Pump	1	ea	$375	$1,000	
6" SS-SCH40	6	lf	$320	$2,000	Thick-Wall 316/316L Stainless Steel Unthreaded Pipe, 1-1/2 Pipe Size x 6' Length - McMaster-Carr
6" Check Valve	1	ea	$2,000	$2,000	
6" Gate Valve	1	ea	$2,500	$2,500	
6" Actuated Valve	1	ea	$4,000	$4,000	
1-1/2" SS-SCH80	6	lf	$320	$2,000	Thick-Wall 316/316L Stainless Steel Unthreaded Pipe, 1-1/2 Pipe Size x 6' Length - McMaster-Carr
1-1/2" Ball Valve	3	ea	$43	$129	Brass Ball Valve, 1-1/2" NPT Female Connections - McMaster-Carr

PRIVILEGED AND CONFIDENTIAL
ATTORNEY/CLIENT COMMUNICATION
AND/OR ATTORNEY WORK PRODUCT
SUBJECT TO ATTORNEY-CLIENT PRIVILEGE

ARCADIS Design & Consultancy for natural and built assets

Description	Quantity	Units	Unit Cost ($)	Total Cost ($) [1][2]	Comments
1-1/2" Check Valve	2	ea	$323	$1,000	
1" SS-SCH80	6	lf	$232	$2,000	Thick-Wall 304/304L Stainless Steel Unthreaded Pipe, 1 Pipe Size x 6' Length - McMaster-Carr
1" Ball Valve	2	ea	$21	$43	Brass Ball Valve, 1" NPT Female Connections - McMaster-Carr
RW-22					
Recovery Pump	1	ea	$3,149	$4,000	Grundfos Model 625S400-2
Motor	1	ea	$4,895	$5,000	Franklin Electric Model 2366174025
In-Well Drop Pipe	11	ea	$852	$10,000	
Sump Pump	1	ea	$375	$1,000	
6" SS-SCH40	6	lf	$320	$2,000	Thick-Wall 316/316L Stainless Steel Unthreaded Pipe, 1-1/2 Pipe Size x 6' Length - McMaster-Carr
6" Check Valve	1	ea	$5,000	$5,000	
6" Manual Valve	1	ea	$406	$406	
6" Actuated Valve	1	ea		$0	
1-1/2" SS-SCH80	6	lf	$320	$2,000	Thick-Wall 316/316L Stainless Steel Unthreaded Pipe, 1-1/2 Pipe Size x 6' Length - McMaster-Carr
1-1/2" Ball Valve	3	ea	$43	$129	Brass Ball Valve, 1-1/2" NPT Female Connections - McMaster-Carr
1-1/2" Check Valve	2	ea	$323	$1,000	
1" SS-SCH80	6	lf	$232	$2,000	Thick-Wall 304/304L Stainless Steel Unthreaded Pipe, 1 Pipe Size x 6' Length - McMaster-Carr
1" Ball Valve	2	ea	$21	$43	Brass Ball Valve, 1" NPT Female Connections - McMaster-Carr
Wellhead Vault Electrical					
Wellhead Vault Electrical Supply	3	ls	$120,000	$360,000	460 volt, 3-phase power supply with VFD, cable, conduit, 120-240 transformer. Assumes power source to be located within 30' of vault.
Wellhead Vault Electrical Controls and Instrumentation	3	ea	$57,491	$172,000	Radio controls from vault to HMI in treatment system, including new control panels in vault
Pressure Indicator	6	ea	$44	$264	McMaster-Carr Stainless Steel Gauge, Stainless Steel Case, Dry, 2-1/2" Dial, 1/4 Bottom, 0-60 psi
Pressure Transmitter	6	ea	$2,828	$16,968	
Flow Indicating Transmitter	3	ea	$5,605	$16,815	
Traffic Control/H&S Program	17	weeks	$4,455	$76,000	One laborer to direct and control traffic and perform health and safety monitoring in the work area
Construction Oversight	17	weeks	$6,105	$104,000	One senior technician to provide full-time field construction management for project duration
Travel and per diem for Senior CM Technician	17	weeks	$1,479	$25,000	Per diem lodging, M&IE, field truck, tolls and 4 hours weekly travel to/from site
Community Air Monitoring Program	5	weeks	$1,400	$7,000	Implementation of CAMP for the excavation, installation, and backfilling of the vault and pipeline
Unit Billing for All On-Site Personnel	17	weeks	$744	$13,000	Level D PPE (3) and one field truck (second field truck included with Senior CM travel/per diem)
Contractor's Internal PM/CM	0	weeks	$5,400	$0	Contractors internal PM costs, including 8 weeks for pre/post management
As-built Survey	2	weeks	$5,500	$11,000	Engineering estimate for as-built utility survey and elevations of recovery well, vault and pipeline.
Pressure testing	18	ea	$2,075	$37,000	Two laborers to conduct pneumatic pressure testing of containment pipe and hydraulic testing of carrier pipe, including ODCs, equipment rental, and parts. Assumes testing of total length of RW-20, RW-21, and RW-22 pipelines.
			Subtotal	**$1,953,968**	

continued on following page.

PRIVILEGED AND CONFIDENTIAL
ATTORNEY/CLIENT COMMUNICATION
AND/OR ATTORNEY WORK PRODUCT
SUBJECT TO ATTORNEY-CLIENT PRIVILEGE

ARCADIS Design & Consultancy for natural and built assets

Description	Quantity	Units	Unit Cost ($)	Total Cost ($) [1][2]	Comments
New RW-21 Area Treatment System					
Contractor mobilization/demobilization	0	ls	$0	$0	Mobe/demobe included with below costs.
Site Utility Survey	2	day	$5,000	$10,000	Subcontracting utility locating firm.
Precondition Survey	1	weeks	$10,000	$10,000	Survey of existing site conditions, including CAD drawings.
Site Preparation	1	acres	$8,000	$8,000	Engineering estimate for clearing, work area set up, equipment set up
Grade Area	8800	sf	$3	$26,000	Grading of area adjacent to GM-38
Gravel Parking Area	160	cy	$45	$7,000	Expansion of gravel parking area adjacent to GM-38
Community Air Monitoring Program	2	weeks	$1,400	$3,000	Implementation of the CAMP for the clearing, regrading and gravel parking area installation.
Fencing and Privacy Slats	300	lf	$27	$11,000	8' chain link steel fence with 20' double swing gate
Building Expansion/Erection	2,000	sf	$50	$100,000	Includes a 50 x 40 x 25-foot expansion to the existing GM-38 building
Building/VPGAC Structural Construction	2,500	sf	$40	$100,000	Includes a 50 x 40 x 25-foot foundation expansion to the existing GM-38 building plus 500 sf for VPGAC
Major Process Equipment					
Air Stripping System					
Air Stripper	2	ea	$195,077	$391,000	Two QED Models 96.6 E-Z Tray, skid mounted including blower, transfer pumps, piping and controls
Blower	2	ea	$14,544	$30,000	
Transfer Pump	2	ea	$16,572	$34,000	
VPGAC	2	ea	$26,830	$54,000	Tetrasolv 20,000 lb VPGAC units in lead/lag, including initial fill with virgin GAC
Building Process Equipment Install and Piping					Engineering estimate for building process piping/duct work
Equipment/Pipe Cost					
6" PVC-SCH80	66	lf	$8.91	$588	
8" PVC-SCH80	87	lf	$13.40	$1,166	
10" PVC-SCH80	54	lf	$19.87	$1,076	
6" Flange	41	ea	$102	$4,200	PVC Sch 80, socket - Spears
8" Flange	14	ea	$183	$2,567	PVC Sch 80, socket - Spears
10" Flange	31	ea	$498	$15,444	PVC Sch 80, socket - Spears
12" Flange	10	ea	$605	$6,050	PVC Sch 80, socket - Spears
8" x 6" Reducer	2	ea	$731	$1,462	
10" x 4" Reducer	2	ea	$403	$806	PVC Sch 80, socket x socket - Spears
4" x 1" Reducer	2	ea	$130	$260	PVC Sch 80, socket x socket - Spears
Flow Element	7	ea	$3,000	$21,000	
6" 45 Degree Ell	2	ea	$161	$323	PVC Sch 80, socket x socket - Spears
8" 45 Degree Ell	2	ea	$350	$699	PVC Sch 80, socket x socket - Spears
6" 90 Degree Ell	10	ea	$134	$1,342	PVC Sch 80, socket x socket - Spears
8" 90 Degree Ell	3	ea	$370	$1,110	PVC Sch 80, socket x socket - Spears
10" 90 Degree Ell	5	ea	$661	$3,303	PVC Sch 80, socket x socket - Spears
16" 90 Degree Ell	3	ea	$1,713	$5,139	PVC Sch 80, socket x socket - Spears
6" Tee	5	ea	$226	$1,128	PVC Sch 80, socket x socket x socket - Spears
8" Tee	1	ea	$494	$494	PVC Sch 80, socket x socket x socket - Spears
10" Tee	1	ea	$877	$877	PVC Sch 80, socket x socket x socket - Spears
16" Tee	1	ea	$3,372	$3,372	PVC Sch 80, socket x socket x socket - Spears
6" Cross	2	ea	$645	$1,289	PVC Sch 80, socket x socket x socket x socket - Spears
8" Cross	1	ea	$943	$943	PVC Sch 80, socket x socket x socket x socket - Spears
10" Cross	3	ea	$1,520	$4,561	PVC Sch 80, socket x socket x socket x socket - Spears
Wye Strainer	2	ea	$674	$1,348	Corrosion-Resistant PVC Y-Strainer, 4 NPT Female
6" Check Valve	8	ea	$5,000	$40,000	
6" Butterfly Valve	8	ea	$406	$3,252	
8" Butterfly Valve	4	ea	$1,237	$4,948	
Vapor Sampling Point				$0	
Tubing	1	ea	$42	$42	General Purpose Copper Tubing, 1/4 Tube Size, 3/8" OD, 0.049" Wall Thickness, 10' Coil
Ball Valve	4	ea	$8	$33	Brass Ball Valve, 1/4" NPT Female Connections
Water Sampling Point					
1" PVC Pipe	24	lf	$10	$245	Chemical-Resistant PVC (Type I) Round Tube, Oversized, 1" OD, 1/4" Wall Thickness
1" Ball Valve	6	ea	$12	$70	Low-Pressure PVC Ball Valve, 1"
Building Fire Protection	2,000	sf	$20	$40,000	Fire protection for new wing of treatment system.

PRIVILEGED AND CONFIDENTIAL
ATTORNEY/CLIENT COMMUNICATION
AND/OR ATTORNEY WORK PRODUCT
SUBJECT TO ATTORNEY-CLIENT PRIVILEGE

ARCADIS Design & Consultancy for natural and built assets

Description	Quantity	Units	Unit Cost ($)	Total Cost ($) (1)(2)	Comments
Building Electrical Supply, Conduit and Wire to Equipment	1	ls	$107,870	$107,870	New power supply, conduit and wire for new equipment from existing MCC, including separate electric meter
Equipment Transmitters	0	ea	$3,500	$0	Water and air transmitters for pressure, flow and temperature, wired to new control panel.
Pressure Indicator	8	ea	$44	$352	McMaster-Carr Stainless Steel Gauge, Stainless Steel Case, Dry, 2-1/2" Dial, 1/4 Bottom, 0-60 psi
Pressure Transmitter	9	ea	$2,828	$25,452	
Temperature Indicating Transmitter	1	ea	$2,828	$2,828	
Flow Indicating Transmitter	4	ea	$5,605	$22,420	
Building Lighting	1	ls	$20,000	$20,000	Engineering estimate to install new lighting for treatment system expansion
Building Controls and Instrumentation	1	ls	$31,000	$31,000	Engineering estimate to install new control panel with HMI, wire to power and controls, programming and testing.
Building HVAC	4	ea	$1,786	$7,144	Supply and install new 35-kW heaters, including breakers, conduit and wire.
Building Security System	1	ls	$15,000	$15,000	CCTV system including remote monitoring access
Discharge Trenching and Piping					Connect to existing GM-38 discharge line
Excavation	1	ea	$4,680	$5,000	Excavation for pipe installation (1450' of trench not shared with RW-20 pipeline)
Sheeting/Shoring	223	lf	$5	$1,000	Sheeting/shoring for stability during trench excavation
Material Disposal	35	cy	$65	$2,000	Disposal of excavation spoils offsite
Pipe Installation	111	lf	$35	$4,000	Prefabricated HDPE 6" carrier pipe with 10" containment. Prefabricated pipe selected to reduce potential impacts to the community and increase public and regulatory perception.
Pipe Bedding Backfill, Compaction and Testing	18	cy	$145	$3,000	
On-Site Reuse Select Fill Backfill and Compaction	10	cy	$65	$1,000	Reuse select fill for backfill
Off-Site Select Fill Backfill, Compaction and Testing	10	cy	$170	$2,000	Compaction and testing of select fill for backfill
Sub-Base Backfill, Compaction and Testing	40	cy	$375	$15,000	
Grass Removal/Restoration	1114	sf	$3	$3,000	Remove, dispose of and restore grass area
Air Discharge					Discharge line air/vacuum release valve and check valve, connect to existing GM-38 discharge.
12" Galvanized Steel Ducting	30	lf	$60.00	$1,800	
18" Galvanized Steel Ducting	150	lf	$150.00	$22,500	
12" Butterfly Valve	2	ea	$1,000	$2,000	
18" Butterfly Valve	4	ea	$2,000	$8,000	
18" x 12" Reducer	2	ea	$1,500	$3,000	
Erosion and Sediment Control Program	1	Acres	$10,000	$10,000	Soil erosion and sediment control program for site work
Contractors In-House Project Management	27	weeks	$5,400	$146,000	Contractors internal PM costs, including 8 weeks for pre/post management
As-built Survey	1	weeks	$5,500	$6,000	Engineering estimate for existing, progress and as-built survey
Construction Inspector	13	weeks	$4,050	$53,000	One senior technician to provide inspection and oversight of the building, piping, and treatment system installation
ODC for Construction Inspector	13	weeks	$555	$7,212	Level D PPE (1) and one field truck
Construction Oversight	13	weeks	$5,550	$72,000	Time is included in Recovery Well Pumping System above, assuming work is being completed concurrently.
Travel and per diem for Senior CM Technician	13	weeks	$1,479	$19,000	Charges are included in Recovery Well Pumping System above, assuming work is being completed concurrently.
System Startup Testing	3	weeks	$12,925	$39,000	Includes full time oversight by two engineers, expedited laboratory analytical for water and air, and expenses.
			Subtotal	**$1,610,715**	

continued on following page.

PRIVILEGED AND CONFIDENTIAL
ATTORNEY/CLIENT COMMUNICATION
AND/OR ATTORNEY WORK PRODUCT
SUBJECT TO ATTORNEY-CLIENT PRIVILEGE

ARCADIS Design & Consultancy for natural and built assets

Description	Quantity	Units	Unit Cost ($)	Total Cost ($) (1)(2)	Comments
Engineering/Project Management					
Engineering	1	LS	$400,000	$400,000	Includes RD/RA report, 30/60/90% complete reports, and design. Includes coordination with Navy.
CM/PM for Well Installation	1	LS	$236,435	$236,000	Subcontractor bidding and procurement, management of field staff, project management, and financial management for recovery well and monitoring well installation, testing, development and waste disposal.
CM/PM for Construction - Phase I	1	LS	$128,441	$128,000	Subcontractor bidding and procurement, management of field staff/construction crew, project management, financial management for well vault, pipeline, and treatment system construction. Cost based on a period of 30 weeks for construction with equivalent of 16 weeks preconstruction.
CM/PM for Construction - Phase II	1	LS	$481,654	$482,000	Subcontractor bidding and procurement, management of field staff/construction crew, project management, financial management for well vault, pipeline, and treatment system construction. Cost based on a period of 30 weeks for construction with equivalent of 16 weeks preconstruction.
			Subtotal	**$1,246,000**	
Miscellaneous Project Costs					
Final Closure Report	0	LS	$100,000	$0	Preparation of a Final Report for Closure per NYSDEC.
SMP Preparation	1	LS	$50,000	$50,000	Preparation of site management plan and related appendices (SAP, QAPP, OM&M Manual, etc.)
Site Management Survey	1	LS	$50,000	$50,000	Bidding/subcontracting/preparation of an ALTA/ACSM easement survey per NYSDEC requirements.
Public Meetings and Availability Sessions	1	LS	$100,000	$100,000	Public meetings and availability sessions per NYSDEC.
Town Permit Fees for Wells	24	ea	$10,000	$240,000	Town of Oyster Bay permit fees for recovery and monitoring wells. Includes labor to coordinate and procure applicable permits.
Town Permit Fees for Pipeline	10%	of	$1,953,968	$195,000	Town of Oyseter Bay permit fees for pipeline. Includes labor to coordinate and procure applicable permits.
Town Building Permit Fees	5%	of	$1,610,715	$81,000	Town of Oyster Bay building permit fees for recovery well, pipeline and treatment system construction.
Permit Review and Expedition	25	ea	$5,000	$125,000	Review of permits and requirements, expedition of permits.
Administrative Controls Legal Fees	1	LS	$10,000	$10,000	Consulting fees for execution of a site-specific environmental easement.
Recovery Well Land Lease Cost	1.50	Acre	$250,000	$375,000	Engineering estimate for land lease, and right of ways, and property owner required bonds. Assumes direct pay by NG.
Recovery Well Land Lease Legal and Administrative Fees	10%	of	$375,000	$38,000	Engineering estimate for legal fees related to land lease and right-of-way recording. Assumes direct pay by NG.
Discharge Land Lease Cost	0.00	Acre	$250,000	$0	Engineering estimate for land lease, and right of ways, and property owner required bonds.
Discharge Land Lease Legal and Administrative Fees	10%	of	$0	$0	Engineering estimate for legal fees related to land lease and right-of-way recording
Treatment Building and Discharge Pipe Land Lease Cost	1	Acre	$250,000	$250,000	Engineering estimate for land lease, and right of ways, and property owner required bonds. Assumes direct pay by NG.
Treatment Building and Discharge Land Lease Legal and Administrative Fees	10%	of	$250,000	$25,000	Engineering estimate for legal fees related to land lease and right-of-way recording. Assumes direct pay by NG
Bonding	5%	of	$3,564,683	$178,234	Engineering estimate for bonding of well vault, well piping, building and process equipment.
			Subtotal	**$1,717,000**	

continued on following page.

Site Closure and Demobilization					
Well Abandonment	0	ea	$0	$0	Occurs after Year 30. Not included.
Building Removal	0	ea	$0	$0	Occurs after Year 30. Not included.
Site Closure Labor	0	ea	$0	$0	Occurs after Year 30. Not included.
Project Management/Regulatory Communications/Meetings	0	ls	$0	$0	Occurs after Year 30. Not included.
			Subtotal Site Closure and Demobilization	**$0**	
			SUBTOTAL CAPITAL COST	**$8,897,000**	
			CAPITAL COST CONTINGENCY	**$0**	Not included; to be added by Northrop Grumman
			TOTAL CAPITAL COST RW20_21	**$8,900,000**	Rounded to nearest $100,000.

continued on the following page.

(1) Total costs have been rounded to the nearest $1,000
(2) Assumed accuracy range of +/- 30%
(3) Costs based on engineering estimates or recent projects completed in the area