U.S. Department of Justice

Environment and Natural Resources Division

Environmental Enforcement Section
Washington, DC 20044-7611

Tel: 202-616-8299
patrick.bryan@usdoj.gov

March 22, 2019

Via U.S. Mail

The Honorable Aaron M. Frey
Attorney General
State of Maine
6 State House Station
Augusta, ME 04333

The Honorable Gerald D. Reid
Commissioner, Maine Department of Environmental Protection
17 State House Station
Augusta, ME 04333-0017

Re: Global Partners LP, Global Companies LLC, and Chelsea Sandwich LLP

Dear Attorney General Frey and Commissioner Reid:

In accordance with Section 113(b) of the Clean Air Act, 42 U.S.C. § 7413(b), the purpose of this letter is to notify you that the United States Department of Justice, on behalf of the Administrator of the United States Environmental Protection Agency, intends to simultaneously file a Complaint and lodge a Consent Decree against Global Partners LP, Global Companies LLC, and Chelsea Sandwich LLP ("Defendants") in the United States District Court for the District of Maine. The Complaint alleges, and the Consent Decree resolves, violations of the Clean Air Act and the Maine state implementation plan ("ME SIP") at Defendants' facility in South Portland, Maine.

The violations alleged in the United States' Complaint concern the Defendant's No. 6 oil and asphalt transfer, storage, and loading activities, and include: (1) Defendants violated, and continue to violate, Chapter 115 of the ME SIP by failing to obtain an emissions license addressing volatile organic compounds ("VOC") emissions and failing to control VOC by applying, at a minimum, best practical treatment; (2) Defendants violated, and continue to violate, Chapter 115 of the ME SIP by failing to comply with the facility's existing license by exceeding the existing license's VOC emissions limit; (3) Defendants violated, and continue to violate, Chapter 134 of the ME SIP by failing to comply with reasonably available control technology requirements at the facility because the facility has the potential to emit VOC at a level greater than 40 tons per year; and (4) Defendants violated, and continue to violate, Sections 502(a) and 503(c) of the Act, 42 U.S.C. §§ 7661a(a) and 7661b(c), by failing to obtain a Title V operating permit because the facility is a major source of VOC.

The Consent Decree requires Defendants to pay a $40,000 civil penalty, to spend no less than $150,000 on a supplemental environmental project involving the replacement of old wood stoves with cleaner units, and to perform certain measures at the facility to address past excess VOC emissions and to limit future VOC emissions.

This letter is merely to notify you and requires no action by your office. Copies of the Complaint and Consent Decree are attached. If you or your staff have any questions, please contact me at (202) 616-8299.

Sincerely,

/s/ Patrick B. Bryan
PATRICK B. BRYAN
Trial Attorney

cc: David Weigert, Esq., U.S. DOJ (by email)
William Chin, Esq., U.S. EPA (by email)
Thomas Olivier, Esq., U.S. EPA (by email)
Scott Boak, Esq., Assistant Attorney General, State of Maine (by email)

ED_002592B_00013275-00002

UNITED STATES DISTRICT COURT
DISTRICT OF MAINE

UNITED STATES OF AMERICA,	)	
	)	
Plaintiff,	)	
	)	
v.	)	Civil Action No. _____
	)	
GLOBAL PARTNERS LP;	)	
GLOBAL COMPANIES LLC;	)	
CHELSEA SANDWICH LLC,	)	
	)	
	)	
Defendants.	)	
	)	

COMPLAINT

The United States of America, by the authority of the Attorney General, through the undersigned attorneys, acting at the request of the Administrator of the Environmental Protection Agency ("EPA"), files this Complaint against Global Partners LP ("Global Partners"), Global Companies LLC ("Global Companies") and Chelsea Sandwich LLC ("Chelsea") (collectively, "Defendants") and alleges as follows:

NATURE OF ACTION

1. This is a civil action under Section 113(a)(1) of the Clean Air Act ("CAA" or the "Act"), 42 U.S.C. § 7413(a)(1), and the Maine state implementation plan ("ME SIP"), including federally approved portions of Maine's air pollution control regulations, 06-096 Code of Maine Rules, Chapters 100-165 ("ME APC Regulations"), promulgated by the Maine Department of Environmental Protection ("ME DEP"). The United States seeks civil penalties and injunctive relief for violations of these statutes and regulations, under Section 113 of the Act.

PARTIES

2. Plaintiff is the United States of America. Authority to bring this action is vested in the Attorney General by Section 305 of the Act, 42 U.S.C. § 7605, and 28 U.S.C. §§ 516 and 519.

3. Defendant Global Partners is a limited partnership, formed in March 2005 under the laws of the State of Delaware, with headquarters located at 800 South Street, Waltham, Massachusetts 02454-0161.

4. Global Partners is an owner and/or operator of a petroleum storage facility, known as "Global Portland," located at 1 Clark Road, South Portland, Cumberland County, Maine 04106 (the "Facility").

5. Global Partners is a "person" within the meaning of Section 302(e) of the Act, 42 U.S.C. § 7602(e).

6. Defendant Global Companies, an affiliate of Global Partners, is a limited liability company formed in 1998 under the laws of the State of Delaware, with principal office located at 800 South Street, Suite 500, Waltham, Massachusetts 02454-9167.

7. Global Companies is an owner and/or operator of the Facility.

8. Global Companies is a "person" within the meaning of Section 302(e) of the Act, 42 U.S.C. § 7602(e).

9. Defendant Chelsea, an affiliate of Global Partners, is a limited liability company, formed in 1998 under the laws of the State of Delaware, with headquarters located at 800 South Street, Suite 500, Waltham, Massachusetts 02453.

10. Chelsea owns the Facility.

ED_002592B_00013275-00004

11. Chelsea is a "person" within the meaning of Section 302(e) of the Act, 42 U.S.C. § 7602(e).

JURISDICTION AND VENUE

12. This Court has jurisdiction over the subject matter of this action, and over Defendants, under Sections 113(a)(1), (a)(3), and (b) of the Act, 42 U.S.C. §§ 7413(a)(1), (a)(3) and (b), and 28 U.S.C. §§ 1331, 1345, and 1355.

13. Venue is proper in this District under Sections 113(a)(1), (a)(3), and (b) of the Act, 42 U.S.C. §§ 7413(a)(1), (a)(3) and (b), and 28 U.S.C. §§ 1391(b)-(c) and 1395(a), because all or a substantial part of the events or omissions giving rise to the claims in this Complaint occurred within this District, all or a substantial part of the property that is the subject of this action is situated in this District, the defendant is subject to the Court's personal jurisdiction, and the civil penalties sought in this action have accrued in this District.

14. Notice of commencement of this action has been given to the State of Maine, under Section 113(b) of the Act, 42 U.S.C. § 7413(b).

STATUTORY AND REGULATORY FRAMEWORK

15. The Clean Air Act, 42 U.S.C. §§ 7401 *et seq.*, establishes a comprehensive scheme for air pollution prevention and control, as described in Section 101 of the Act, 42 U.S.C. § 7401.

16. Congress enacted the Act "to protect and enhance the quality of the Nation's air resources so as to promote the public health and welfare and the productive capacity of its population." 42 U.S.C. § 7401(b)(1).

ED_002592B_00013275-00005

17. Section 110(a) of the Act, 42 U.S.C. § 7410(a), requires that each state prepare a state implementation plan ("SIP") incorporating regulations designed to attain and maintain healthful air quality. A state must submit its SIP, including any revisions thereto, to EPA for approval. Once EPA has approved a SIP, the federal government may enforce the SIP's requirements and may enforce any SIP-authorized permits. 42 U.S.C. § 7413(a)-(b).

18. EPA has designated ozone as an ambient air pollutant, and has developed a national ambient air quality standard ("NAAQS") for ozone. 40 C.F.R. § 50.9. Ground-level ozone is the primary ingredient in smog. Ozone forms when volatile organic compounds ("VOCs") react with nitrogen oxides in sunlight. To control ozone formation, EPA and the states have generally sought to control VOC and nitrogen oxide emissions.

19. Since May 2001 or earlier, South Portland, Maine, was in a NAAQS nonattainment area for ozone. During that time, Section 184(b)(2) of the Act, 42 U.S.C. § 7511c(b)(2), required that the ME SIP incorporate more stringent VOC controls than those required in ozone attainment areas. Although the area is now designated as in attainment with the ozone NAAQS, South Portland remains subject to nonattainment area VOC emission control requirements under the ME SIP because it is in an Ozone Transport Region, under Section 184 of the Act, 42 U.S.C. § 7511c.

20. Maine adopted a "state implementation plan" within the meaning of Sections 110 and 113(a)(1) of the Act, 42 U.S.C. §§ 7410, 7413(a)(1). The ME SIP has been approved by EPA under CAA Section 110.

21. The term "source" is defined in Chapter 100 of the ME SIP to mean "any building, structure, facility, or installation which emits or may emit any regulated pollutant."

The term "facility, building, structure, or installation" is defined in ME SIP Chapter 100 to mean "all of the pollutant-emitting activities which belong to the same industrial grouping, are located on one or more contiguous or adjacent properties, and are under the control of the same person (or persons under common control)."

22. A "major source" as defined in Chapter 100 of the Maine SIP includes any source that is subject to 40 C.F.R. Part 70 that has not been issued a Part 70 license (*i.e.*, a Title V operating permit) and which emits or has the potential to emit fifty tons per year or more of VOCs in the ozone transport region. *See also* Section 501(2)(B) of the Act, 42 U.S.C. § 7661(2)(B), and 40 C.F.R §§ 70.2 and 70.3(a) and (b).

23. Under Chapter 115 of the ME SIP, entitled "Emission License Regulations," Section II.A, no person may emit any air contaminant from any source without an air emission license, unless the source falls within one of the exemptions in Section II.C of Chapter 115.

24. Under Chapter 115, Section V.A.2.a of the Maine SIP, to receive an air emission license, an owner or operator must demonstrate, among other things, that the air emissions from its facility will be receiving "best practical treatment" (or "BPT"), including where appropriate the technology requirements specified in Section VI of Chapter 115.

25. Under Chapter 134 of the ME SIP, entitled "Reasonably Available Control Technology for Facilities that Emit Volatile Organic Compounds (VOC RACT)," Section 3, the owner or operator of any facility that emits or has the potential to emit at least 40 tons per calendar year of VOCs, and does not fall within one of the enumerated exemptions, must comply with reasonably available control technology ("RACT") requirements.

26. Under Section 503(c) of the Act, 42 U.S.C. § 7661b(c), and 40 C.F.R § 70.5, major sources are required to apply for and obtain a Title V operating permit no later than 12 months after becoming subject to a federally approved state Title V operating permit program, or such earlier date as the state may establish. At all times relevant to the allegations in this Complaint, Maine has had an approved Title V operating permit program (as of March 24, 1997). The requirements of this program are set forth in Chapter 140 of the ME SIP. In this case, Defendants' needed to apply for a Title V operating permit by September 2003.

27. Section 502(a) of the Act, 42 U.S.C. § 7661a(a), and 40 C.F.R. § 70.7(b), prohibit a major source from operating except in accordance with a Title V operating permit after the effective date of any permit program approved or promulgated under Title V of the Act.

28. Under Section 113(a)(3)(B) of the Act, 42 U.S.C. § 7413(a)(3)(B), if the Administrator of EPA finds that any person has violated a requirement or prohibition of, *inter alia,* Subchapter I of the Act, 42 U.S.C. §§ 7401-7515, Subchapter V of the Act, 42 U.S.C. §§ 7661-7661f, or any rule promulgated under CAA Subchapters I and V, then the Administrator may issue an order requiring the person to comply with such requirement or prohibition.

29. Section 113(b) of the Act, 42 U.S.C. § 7413(b), authorizes the United States to commence a civil judicial enforcement action for violations of any requirement or prohibition of Subchapter I of the Act, 42 U.S.C. §§ 7401-7515, Subchapter V of the Act, 42 U.S.C. §§ 7661-7661f, or any rule or order promulgated or issued under CAA Subchapters I or V, seeking civil penalties of up to $25,000 per day for each violation, injunctive relief, or both.

30. Under the Federal Civil Penalties Inflation Adjustment Act of 1990, 28 U.S.C. § 2461 ("DCIA"), as amended by the Debt Collection Improvement Act of 1996, 31 U.S.C.

ED_002592B_00013275-00008

§ 3701, and EPA's Civil Monetary Penalty Inflation Adjustment Rule, 40 C.F.R. Part 19, promulgated under the DCIA (collectively, the "Inflation Adjustment Rule"), the maximum amount of civil penalties for which a person shall be liable under CAA Section 113(b), 42 U.S.C. § 7413(b), was increased to $27,500 per day for each violation occurring after January 30, 1997, through March 15, 2004; $32,500 per day for each violation occurring after March 15, 2004, through January 12, 2009; $37,500 per day for each violation occurring after January 12, 2009, through November 2, 2015; $93,750 per day for each violation occurring after November 2, 2015, and assessed on or after August 1, 2016, but before January 15, 2017; $95,284 per day for each violation occurring after November 2, 2015, and assessed on or after January 15, 2017, but before January 15, 2018; and $97,229 per day for each violation occurring after November 2, 2015, and assessed on or after January 15, 2018.

GENERAL ALLEGATIONS

31. At all times relevant to the allegations in this Complaint, Defendant Chelsea has been an "owner" of the Facility, within the meaning of Chapter 100 of the ME SIP.

32. At all times relevant to the allegations in this Complaint, Defendant Global Partners has been an "owner" or "operator" of the Facility, within the meaning of Chapter 100 of the ME SIP.

33. At all times relevant to the allegations in this Complaint, Defendant Global Companies has been an "owner" or "operator" of the Facility, within the meaning of Chapter 100 of the ME SIP.

ED_002592B_00013275-00009

34. At all times relevant to the allegations in this Complaint, the Facility has included 12 petroleum storage tanks. Defendants have used four of those tanks to store No. 6 fuel oil (also known as "bunker fuel" or "bunker oil") or asphalt.

35. Since on or around September 2002, Defendants have stored No. 6 oil in two tanks, known as Tank Nos. 1 and 2. From on or around September 2002 to February 2010, Defendants stored No. 6 oil in one tank, known as Tank No. 9. From on or around September 2002 to on or around March 2016, Defendants stored No. 6 oil in one tank, known as Tank No. 3.

36. Since February 2010, Defendants have stored asphalt in Tank No. 9. Since on or around March 2016, Defendants have stored asphalt in Tank No. 3.

37. At all times relevant to the allegations in the Complaint, Defendants' activity at the Facility have included, without limitation, the transfer (from barges, other vessels, or trucks) into tanks, the storage in tanks, and the loading (into trucks through a loading rack) of petroleum products. Specifically, the Facility transfers petroleum products, including No. 6 oil and asphalt, by pumping them from barges or other vessels on the Fore River, through pipes, to the Facility's storage tanks. From these tanks, the petroleum products, including No. 6 oil and asphalt, are loaded into tanker trucks (by pumping the products through pipes to a truck loading rack) or into marine vessels.

38. No. 6 oil and asphalt are solid or semi-solid at ambient temperatures and must be heated in order to remain in liquid form, with low enough viscosity to be pumped in and out of barges or other vessels, storage tanks, and tanker trucks. To keep these petroleum products in

ED_002592B_00013275-00010

liquid form, with sufficiently low viscosity, the No. 6 oil and asphalt storage tanks at the Facility are heated to above-ambient temperatures.

39. During the period of Chelsea's ownership and Global Partners' and Global Companies' ownership and/or operation of the South Portland Facility, the Facility has emitted VOC.

40. By letter dated November 2, 2011, EPA issued to Global Partners an information reporting requirement and testing order, under Section 114 of the Act, 42 U.S.C. § 7414 ("November 2011 Order"). The November 2011 Order required Global Partners, among other things, to monitor and sample air, including VOC levels, in the headspace of storage tanks containing No. 6 oil and asphalt at the Facility, and to monitor and sample VOC in air emissions from loading operations at the facilities that Global Partners operate in New England.

41. By letter dated March 29, 2012, EPA issued to Global Partners an information reporting requirement, under Section 114 of the Act, 42 U.S.C. § 7414 ("March 2012 Order"). The March 2012 Order required Global Partners to provide information to EPA regarding, among other things, throughput capacity of No. 6 oil and asphalt, date of purchase or installation of each loading rack, dates each storage tank and loading rack was put into service and taken out of service, and information on each capital project, including installations, repairs, and retrofits.

42. By letter dated May 23, 2012, Global Partners submitted a response to EPA's March 2012 Order.

43. On or about August 16, 2012, under the November 2011 Order, Global Partners completed VOC emissions testing for asphalt at the Facility. On November 14, 2012, Global Partners submitted to EPA a report on its August 2012 testing.

44. On or about July 2, 2013, under the November 2011 Order, Global Partners completed VOC emissions testing for No. 6 oil at the Facility. On August 9, 2013, Global Partners submitted to EPA a report on its July 2013 testing.

45. The Facility does not qualify for any of the exemptions to the requirement in the ME SIP Chapter 115, Section 1.B, to obtain an air emission license.

46. The Facility does not qualify for any of the exemptions to the RACT requirements in the ME SIP Chapter 134, Section 1.A.

47. On January 23, 2013, ME DEP issued to Global Companies an air emission license for the Facility ("Emission License"). The Emission License establishes a Facility-wide limit on VOC emissions of 21.9 tons per year. But in establishing this limit, the Emission License does not take into account emissions from the Facility's No. 6 oil and asphalt transfer, storage or loading activities.

48. Under the terms of the Emissions License, Defendants were permitted to store only No. 6 oil in Tank No. 3. Pursuant to a request in January 2016 by Global Companies for a minor revision to the Emissions License in order to be able to store either No. 6 oil or asphalt in Tank No. 3, ME DEP issued an amendment to the Emission License on March 14, 2016 ("License Amendment No. 1") granting the request. The License Amendment No. 1 stated that the revision did not change total annual emissions from the facility.

49. The results of Global Partners' VOC emissions testing at the Facility show that the potential emissions from its No. 6 oil and asphalt transfer, storage, and loading activities alone exceed 40 tons per year.

ED_002592B_00013275-00012

50. On June 6, 2014, EPA issued a Notice of Violation to Global Partners for the Facility ("NOV No. 1"). NOV No. 1 alleges that:

a. Based on the Facility's licensed VOC emissions limit plus its potential VOC emissions from the Facility's No. 6 oil and asphalt transfer, storage and loading activities, the Facility has potential VOC emissions greater than 50 tons per year and is a major source of VOC.

b. As an owner or operator of a major source of VOC emissions, Defendants must obtain a license that takes into account VOC emissions from all of its No. 6 oil and asphalt transfer, storage and loading activities at the Facility.

c. Defendants are subject to the requirement to, at a minimum, apply "best practical treatment" to its VOC emissions from its No. 6 oil and asphalt transfer, storage and loading activities at the Facility.

d. To date, Defendants have not applied "best practical treatment" to all such operations.

e. The Facility also has exceeded the Facility-wide VOC emissions limit in its Emission License.

f. Accordingly, Defendants have violated and continue to violate both the ME SIP and its Emission License.

ED_002592B_00013275-00013

51. On April 7, 2015, EPA issued another Notice of Violation to Global Partners for the Facility ("NOV No. 2"). NOV No. 2 alleges that:

a. Under Chapter 134 of the ME SIP, the owner or operator of any facility that emits or has the potential to emit at least 40 tons per year of VOC must comply with reasonably available control technology ("RACT") requirements. These requirements include, among other things, VOC emission standards (ME SIP Ch. 134 § 3.A) and emission reduction planning (*id.* § 3.B).

b. As a facility with storage tanks that contain volatile organic liquids (such as No. 6 oil and asphalt) that emit VOC, Defendants' Facility was subject to ME SIP Chapter 134 effective February 15, 1995. *Id.* § 1.B.2.

c. The VOC emissions testing for No. 6 oil and asphalt at the Facility indicate that potential emissions from No. 6 oil and asphalt transfer, storage and loading activities exceed 40 tons per year. Therefore, the Facility is subject to the VOC RACT requirements in Chapter 134 of the ME SIP.

d. Defendants have failed to comply with the VOC RACT requirements of the ME SIP Chapter 134, Section 3, at the Facility.

e. Defendants have violated and continues to violate Chapter 134 of the ME SIP.

FIRST CLAIM FOR RELIEF
(ME SIP Chapter 115 – Failure to Obtain Emission License)

52. All other paragraphs of this Complaint are incorporated by reference as if set forth fully herein.

53. As described above in paragraph 50b, Defendants were required to obtain an

Emission License addressing VOC emissions from all of its No. 6 oil and asphalt transfer, storage and loading activities at the Facility, but failed to do so.

54. Defendants were required, at a minimum, to apply "best practical treatment" to its emissions from all No. 6 oil and asphalt transfer, storage and loading activities at the Facility, but failed to do so.

55. Defendants violated Chapter 115 of the ME SIP every day that they failed to apply for a license addressing VOC emissions from all No. 6 oil and asphalt transfer, storage and loading activities at its Facility.

56. Defendants violated Chapter 115 of the ME SIP every day that it failed to control VOC emissions by applying, at a minimum, "best practical treatment" to all of its No. 6 oil and asphalt transfer, storage and loading activities at the Facility.

57. Under Section 113(b) of the Act, 42 U.S.C. § 7413(b), as amended by the DCIA and the Inflation Adjustment Rule, Defendants are liable for the payment of a civil penalty to the United States of up to $32,500, per day for each violation occurring after March 15, 2004, through January 12, 2009; up to $37,500 per day for each violation occurring after January 12, 2009, through November 2, 2015; up to $93,750, per day for each violation occurring after November 2, 2015, and assessed on or after August 1, 2016, but before January 15, 2017; up to $95,284, per day for each violation occurring after November 2, 2015, and assessed on or after January 15, 2017, but before January 15, 2018; and up to $97,229 per day for each violation occurring after November 2, 2015 and assessed on or after January 15, 2018, of Chapter 115 of the ME SIP.

ED_002592B_00013275-00015

SECOND CLAIM FOR RELIEF

(ME SIP Chapter 115 – Violation of Emission License)

58. All other paragraphs of this Complaint are incorporated by reference as if set forth fully herein.

59. Under the Emissions License, Defendants have been required to limit its total actual VOC emissions at the Facility to no more than 21.9 tons per year.

60. At all times since January 23, 2013, the Facility's actual VOC emissions have exceeded 21.9 tons per year.

61. At all times since January 23, 2013, Defendants have violated the Emission License for the Facility.

62. Defendants violated Chapter 115 of the ME SIP every day that they failed to comply with the Facility-wide limit on actual VOC emissions in the Emission License.

63. Under Section 113(b) of the Act, 42 U.S.C. § 7413(b), as amended by the DCIA and the Inflation Adjustment Rule, Defendants are liable for the payment of a civil penalty to the United States of up to $32,500 per day for each violation occurring after March 15, 2004, through January 12, 2009; up to $37,500 per day for each violation occurring after January 12, 2009, through November 2, 2015; up to $93,750 per day for each violation occurring after November 2, 2015, and assessed on or after August 1, 2016, but before January 15, 2017; up to $95,284 per day for each violation occurring after November 2, 2015, and assessed on or after January 15, 2017, but before January 15, 2018; and up to $97,229 per day for each violation occurring after November 2, 2015 and assessed on or after January 15, 2018, of Chapter 115 of the ME SIP.

ED_002592B_00013275-00016

THIRD CLAIM FOR RELIEF

(ME SIP Chapter 134 – Violation of Emission Control Requirements)

64. All other paragraphs of this Complaint are incorporated by reference as if set forth fully herein.

65. Because the No. 6 oil and asphalt transfer, storage and loading activities at the Facility have a total potential to emit VOC at a level greater than 40 tons per year, the Facility is subject to the VOC RACT requirements set forth in the ME SIP Chapter 134, Section 3.

66. At all times relevant to the allegations in this Complaint, the No. 6 oil and asphalt transfer, storage and loading activities at the Facility have the potential to emit VOC at levels greater than 40 tons per year.

67. At all times relevant to the allegations in this Complaint, the Facility has been subject to the VOC RACT requirements set forth in the ME SIP, Chapter 134, Section 3. These requirements include, among other things, VOC emission standards (ME SIP § 3.A) and emission reduction planning (ME SIP § 3.B).

68. At all times relevant to the allegations in the Complaint, Defendants have failed to meet the RACT requirements for VOC at the Facility, including, among other things, VOC emission standards (*id.* § 3.A) and emission reduction planning (*id.* § 3.B).

69. Defendants violated Chapter 134 of the ME SIP every day that they failed to comply with the RACT requirements for VOC at the Facility.

70. Under Section 113(b) of the Act, 42 U.S.C. § 7413(b), as amended by the DCIA and the Inflation Adjustment Rule, Defendants are liable for the payment of a civil penalty to the United States of up to $32,500 per day for each violation occurring after March 15, 2004,

ED_002592B_00013275-00017

through January 12, 2009; up to $37,500 per day for each violation occurring after January 12, 2009 through November 2, 2015; up to $93,750 per day for each violation occurring after November 2, 2015 and assessed on or after August 1, 2016 but before January 15, 2017; up to $95,284 per day for each violation occurring after November 2, 2015 and assessed on or after January 15, 2017 but before January 15, 2018; and up to $97,229 per day for each violation occurring after November 2, 2015 and assessed on or after January 15, 2018, of Chapter 134 of the ME SIP.

FOURTH CLAIM FOR RELIEF

(CAA Section 502(a) and 503(c), 40 C.F.R. §§ 70.5 and 70.7(b) – Violation of Title V Permit Program Requirements)

71. All other paragraphs of this Complaint are incorporated by reference as if set forth fully herein.

72. As described above in paragraphs 35, 47, and 50a, based on the Facility's licensed VOC emissions limit plus its potential VOC emissions from the Facility's No. 6 oil and asphalt transfer, storage and loading activities, the Facility has potential VOC emissions greater than 50 tons per year and is a major source of VOCs (as of September 2002).

73. On March 24, 1997, EPA granted interim approval of the Maine Title V Program, as set forth at Chapter 140 of the ME APC Regulations. *See* 40 C.F.R. Part 70.

74. Under Section 503(c) of the Act, 42 U.S.C. § 7661b(c) and 40 C.F.R. § 70.5, Defendants were required to apply for a Title V operating permit that identified all applicable requirements by no later than September 2003 (*i.e.*, within 12 months after Defendants began to store No. 6 oil in Tank Nos. 1, 2, 3 and 9).

ED_002592B_00013275-00018

75. Under Section 502(a) of the Act, 42 U.S.C. § 7661a(a), and 40 C.F.R. § 70.7(b), Defendants are prohibited from operating the Facility except in accordance with a Title V operating permit.

76. Since May 2001 or earlier, Defendants have not applied for a Title V operating permit for the Facility, in violation of Section 503(c) of the Act, 42 U.S.C. § 7661b(c), and 40 C.F.R. § 70.5.

77. Since May 2001 or earlier, Defendants have owned or operated the Facility without a Title V operating permit, in violation of Section 502(a) of the Act, 42 U.S.C. § 7661a(a), and 40 C.F.R. § 70.7(b).

78. Under Section 113(b) of the Act, 42 U.S.C. § 7413(b), as amended by the DCIA and the Inflation Adjustment Rule, Defendants are liable for the payment of a civil penalty to the United States of up to $32,500 per day for each violation occurring after March 15, 2004, through January 12, 2009; up to $37,500 per day for each violation occurring after January 12, 2009, through November 2, 2015; up to $93,750 per day for each violation occurring after November 2, 2015, and assessed on or after August 1, 2016, but before January 15, 2017; up to $95,284 per day for each violation occurring after November 2, 2015, and assessed on or after January 15, 2017, but before January 15, 2018; and up to $97,229 per day for each violation occurring after November 2, 2015, and assessed on or after January 15, 2018, of Sections 503(c) and 502(a) of the Act, 42 U.S.C. §§ 7661b(c) and 7661a(a), and 40 C.F.R. §§ 70.5 and 70.7.

ED_002592B_00013275-00019

PRAYER FOR RELIEF

WHEREFORE, Plaintiff United States of America respectfully requests that this Court enter judgment, for the United States and against Defendants, providing the following relief:

1. Permanently enjoin Defendants from all ongoing violations referenced in this Complaint, of the Act, of the Act's implementing regulations, and of the ME SIP, including Chapters 115 and 134;

2. Order Defendants to comply with Part D of Subchapter I of the Act, 42 U.S.C. §§ 7501-7515, Subchapter V of the Act, 42 U.S.C. §§ 7661-7661f, the Act's implementing regulations, and the ME SIP, including Chapters 115 and 134;

3. Order Defendants to pay a civil penalty for each day of each violation referenced in this Complaint, of the Act, of the Act's implementing regulations, and the ME SIP, including Chapters 115 and 134, enumerated in this Complaint;

4. Award the United States its costs of this action; and

5. Grant the United States such other relief as the Court deems just and proper.

ED_002592B_00013275-00020

Respectfully Submitted,

ELLEN M. MAHAN
Deputy Section Chief
Environmental Enforcement Section
Environment and Natural Resources Division
U.S. Department of Justice

_____
Dated

_____

PATRICK B. BRYAN
Trial Attorney
DAVID L. WEIGERT
Senior Attorney
Environmental Enforcement Section
Environment and Natural Resources Division
U.S. Department of Justice
P.O. Box 7611
Washington, D.C. 20044-7611
(202) 616-8299 (PBB)
(202) 514-0133 (DLW)
patrick.bryan@usdoj.gov
david.weigert@usdoj.gov

HALSEY B. FRANK
United States Attorney
District of Maine

JOHN G. OSBORN
Chief, Civil Division
U.S. Attorney's Office, District of Maine
100 Middle Street Plaza
East Tower, Sixth Floor
Portland, Maine 04101
(207) 780-3257
john.osborn2@usdoj.gov

ED_002592B_00013275-00021

OF COUNSEL:

WILLIAM D. CHIN
THOMAS OLIVIER
U.S. EPA, Region 1
5 Post Office Square
Suite 100 (Mail Code OES 04-4)
Boston, MA 02109-3912

ED_002592B_00013275-00022

UNITED STATES DISTRICT COURT
DISTRICT OF MAINE

UNITED STATES OF AMERICA,	)	
	)	
Plaintiff,	)	
	)	
v.	)	Civil No._____
	)	
GLOBAL PARTNERS LP,	)	
GLOBAL COMPANIES LLC, and	)	
CHELSEA SANDWICH, LLC	)	
	)	
Defendants.	)	
	)	

CONSENT DECREE

TABLE OF CONTENTS

I. JURISDICTION AND VENUE 2
II. APPLICABILITY 3
III. DEFINITIONS 4
IV. CIVIL PENALTY 5
V. COMPLIANCE REQUIREMENTS 6
VI. SUPPLEMENTAL ENVIRONMENTAL PROJECT 8
VII. REPORTING REQUIREMENTS 16
VIII. STIPULATED PENALTIES 18
IX. FORCE MAJEURE 22
X. DISPUTE RESOLUTION 24
XI. INFORMATION COLLECTION AND RETENTION 26
XII. EFFECT OF SETTLEMENT/RESERVATION OF RIGHTS 28
XIII. COSTS 30
XIV. NOTICES 30
XV. EFFECTIVE DATE 32
XVI. RETENTION OF JURISDICTION 32
XVII. MODIFICATION 33
XVIII. TERMINATION 33
XIX. PUBLIC PARTICIPATION 34
XX. SIGNATORIES/SERVICE 34
XXI. INTEGRATION 35
XXII. FINAL JUDGMENT 35
XXIII. 26 U.S.C. SECTION 162(F)(2)(A)(II) IDENTIFICATION. 35
XXIV. APPENDIX 36

ED_002592B_00013275-00024

Plaintiff United States of America, on behalf of the United States Environmental Protection Agency ("EPA"), has filed a complaint in this action concurrently with this Consent Decree, alleging that Defendants, Global Partners LP ("Global Partners"), Global Companies LLC ("Global Companies"), and Chelsea Sandwich LLC (collectively, "Defendants"), violated Sections 502(a) and 503(c), of the Clean Air Act (the "Act"), 42 U.S.C. § 7661a(a) and 42 U.S.C. § 7661b(c), 40 C.F.R. § 70.7(b), and the Maine state implementation plan ("ME SIP"), including federally approved portions of Maine's air pollution control regulations, 06-096 Code of Maine Rules, Chapters 100-165, promulgated by the Maine Department of Environmental Protection ("ME DEP").

The Complaint alleges that Defendants violated the Act and the Maine SIP by failing to obtain an emission license that addresses volatile organic compounds ("VOCs") from heated asphalt and No. 6 oil storage tanks, by exceeding total VOC emission limits under an existing state license, by failing to take appropriate VOC emission control measures, and by failing to apply for an operating permit under Title V of the Act, in connection with the Defendants' ownership and operation of a petroleum storage and distribution facility known as "Global Portland," located at 1 Clark Road, South Portland, Cumberland County, Maine 04106 (the "Facility").

Defendants do not admit any liability to the United States arising out of the transactions or occurrences alleged in the Complaint.

The Parties recognize, and the Court by entering this Consent Decree finds, that this Consent Decree has been negotiated by the Parties in good faith and will avoid litigation between and among the Parties, and that this Consent Decree is fair, reasonable, and in the public interest.

ED_002592B_00013275-00025

NOW, THEREFORE, before the taking of any testimony, without the adjudication or admission of any issue of fact or law except as provided in Section I, with the consent of the Parties, IT IS HEREBY ADJUDGED, ORDERED, AND DECREED as follows:

I. JURISDICTION AND VENUE

1. This Court has jurisdiction over the subject matter of this action, under 28 U.S.C. §§ 1331, 1345, and 1355, and Sections 113(a)(1), (a)(3), and (b) of the Act, 42 U.S.C. §§ 7413(a)(1), (a)(3) and (b), and over the Parties. Venue lies in this judicial District under Sections 113(a)(1), (a)(3), and (b) of the Act, 42 U.S.C. §§ 7413(a)(1), (a)(3) and (b), and 28 U.S.C. §§ 1391(b)-(c) and 1395(a), because all or a substantial part of the events or omissions giving rise to the claims in this Complaint occurred within this District, all or a substantial part of the property that is the subject of this action is situated in this District, the Defendants are subject to the Court's personal jurisdiction, and the civil penalties sought in this action have accrued in this District. For purposes of this Decree, or any action to enforce this Decree, Defendants consent to the Court's jurisdiction over this Decree and any such action and over Defendants, and consent to venue in this District.

2. For purposes of this Consent Decree, Defendants agree that the Complaint states claims upon which relief may be granted under Sections 502(a), 503(c), and 113(a) of the Act, 42 U.S.C. § 7661a(a), 42 U.S.C. § 7661b(c), 42 U.S.C. § 7413(a), 40 C.F.R. § 70.7(b), and the ME SIP.

ED_002592B_00013275-00026

II. APPLICABILITY

3. The obligations of this Consent Decree apply to and are binding upon the United States, Defendants and any of their successors or assigns, and any other entities or persons otherwise bound by law.

4. No transfer of ownership or operation of the Facility, whether in compliance with the procedures of this Paragraph or otherwise, shall relieve Defendants of their obligation to ensure that the terms of the Decree are implemented. Subject to the foregoing sentence, no later than the date of transfer of ownership or operation of the Facility, Defendants shall provide notice to the EPA in accordance with Section XIV (Notices) of the transfer and an agreement executed by the Defendants and the transferee indicating that (1) the transferee has received a copy of this Consent Decree and (2) the transferee shall comply with the Defendants' obligations of the Consent Decree. Upon written request, Defendants shall provide EPA a copy of the final written sales agreement for the Facility, which request and response shall be subject to 40 C.F.R. § 2.203 and related case law. Any attempt to transfer ownership or operation of the Facility during the term of this Consent Decree without complying with this Paragraph constitutes a violation of this Decree.

5. Defendants shall provide a copy of this Consent Decree to all officers, employees, contractors, and agents whose duties might reasonably include overseeing compliance with any provision of this Decree. Defendants shall condition any such contract upon performance of the work in conformity with the terms of this Consent Decree.

ED_002592B_00013275-00027

6. In any action to enforce this Consent Decree, Defendants shall not raise as a defense the failure by any of their officers, directors, employees, agents, or contractors to take any actions necessary to comply with the provisions of this Consent Decree.

III. DEFINITIONS

7. Terms used in this Consent Decree that are defined in the Act, the ME SIP, or other federal or state regulations shall have the meanings assigned to them in the Act, the ME SIP, or such regulations, unless otherwise provided in this Decree. Whenever the terms set forth below are used in this Consent Decree, the following definitions shall apply:

"Complaint" shall mean the complaint filed by the United States in this action.

"Consent Decree" or "Decree" shall mean this Decree.

"Day" shall mean a calendar day unless expressly stated to be a business day. In computing any period of time under this Consent Decree, where the last day would fall on a Saturday, Sunday, or federal holiday, the period shall run until the close of business of the next business day.

"Defendants" shall mean Global Partners LP, Global Companies LLC, and Chelsea Sandwich LLC.

"EPA" shall mean the United States Environmental Protection Agency and any of its successor departments or agencies.

"Effective Date" shall have the definition provided in Section XV (Effective Date).

"Heated Bulk Storage Tank" shall mean a bulk storage tank with a shell capacity of greater than 30,000 gallons containing either No. 6 oil or asphalt.

ED_002592B_00013275-00028

"Open Federal Financial Assistance Transaction" shall mean a grant, cooperative agreement, loan, federally guaranteed loan guarantee, or other mechanism for providing federal financial assistance for which the performance period has not yet expired.

"Paragraph" shall mean a portion of this Decree identified by an arabic numeral.

"Parties" shall mean the United States and Defendants.

"Project Dollars" shall mean Defendants' expenditures, excluding administrative costs, incurred or made in carrying out the environmental project, as provided in Section VI (Supplemental Environmental Project) of this Consent Decree.

"Section" shall mean a portion of this Decree identified by a roman numeral.

"State" shall mean the State of Maine.

"United States" shall mean the United States of America, acting on behalf of EPA.

IV. CIVIL PENALTY

8. Within 30 Days after the Effective Date, Defendants shall pay the sum of $40,000.00 as a civil penalty, together with interest accruing from the date on which the Consent Decree is lodged with the Court, at the rate specified in 28 U.S.C. ¶ 1961 as of the date of lodging.

9. Defendants shall pay the civil penalty due by FedWire Electronic Funds Transfer to the U.S. Department of Justice account, in accordance with instructions provided to Defendants by the Financial Litigation Unit ("FLU") of the United States Attorney's Office for the District of Maine after the Effective Date. The payment instructions provided by the FLU will include a Consolidated Debt Collection System ("CDCS") number, which Defendants shall

ED_002592B_00013275-00029

use to identify all payments required to be made under this Consent Decree. The FLU will provide the payment instructions to:

Global Partners LP
800 South Street, Suite 500
Waltham, MA 02453
Attn: Philip E. Segaloff
Tel: 781-398-4436
Email: psegaloff@globalp.com

on behalf of Defendants. Defendants may change the individual to receive payment instructions on its behalf by providing written notice of such change to the United States and EPA in accordance with Section XIV (Notices).

At the time of payment, Defendants shall send notice that payment has been made: (i) to EPA via email at cinwd_acctsreceivable@epa.gov or via regular mail at EPA Cincinnati Finance Office, 26 W. Martin Luther King Drive, Cincinnati, Ohio 45268; (ii) to the United States via email or regular mail in accordance with Section XIV (Notices); and (iii) to EPA in accordance with Section XIV (Notices). Such notice shall state that the payment is for the civil penalty owed under the Consent Decree in *United States v. Global Partners LP et al.* and shall reference the civil action number, CDCS Number, and DOJ case number 90-5-2-1-11428.

10. Defendants shall not deduct any penalties paid under this Decree pursuant to this Section or Section VIII (Stipulated Penalties) in calculating their federal income tax.

V. COMPLIANCE REQUIREMENTS

11. Before termination of this Consent Decree under Section XVIII (Termination), and in any event for no less than five (5) years after the Effective Date, Defendants shall implement the following measures at the Facility:

a. Product Storage Conditions for Heated Bulk Storage Tanks. Commencing

immediately after the Effective Date, Defendants shall have no more than four (4) Heated Bulk Storage Tanks containing either No. 6 oil or asphalt at the Facility. Of those Heated Bulk Storage Tanks, no more than two (2) shall contain No. 6 oil at any one time.

b. Tank Heating Conditions. Defendants shall not apply heat to the four Heated Bulk Storage Tanks allowed in Paragraph 11.a. for at least 120 "non-heating days" in the aggregate, on a rolling 12-month basis, commencing immediately after the Effective Date of this Consent Decree. A "non-heating day" is any calendar day during which heat is not added to one of the Heated Bulk Storage Tanks. Multiple "non-heating days" may accrue on any day where multiple Heated Bulk Storage Tanks are not heated on the same day, with each Heated Bulk Storage Tank that is not heated counting as a separate "non-heating day."

c. Throughput Limitations. Commencing immediately after the Effective Date of the Consent Decree, Defendants shall comply with throughput limitations of 50 million gallons per year ("gpy") of No. 6 oil and 75 million gpy of asphalt, on a rolling 12-month basis.

d. Supplemental Measures. Within 180 Days of the Effective Date, unless it is determined that further approvals from ME DEP or other local, state or federal entity are necessary for implementation, Defendants shall install, operate and maintain mist eliminators (the "Equipment") on the vents of each Heated Bulk Storage Tank in service at the Facility, in accordance with the work plan set forth in Appendix A to this Consent Decree. Once the Equipment is installed and a Heated Bulk Storage Tank is in service, Defendants shall operate the Equipment at all times the Heated Bulk Storage Tank is heated, including when the tank receives product.

e. Within 60 Days after the Effective Date of this Consent Decree,

ED_002592B_00013275-00031

Defendants shall apply for an amended State license for the Facility that incorporates conditions at least as stringent as those set forth above in subparagraphs (a) through (c) of this Paragraph 11.

f. Defendants shall operate the Facility in accordance with this Paragraph 11, for the longest of the following: (i) at least five (5) years after the Effective Date of this Consent Decree; or (ii) from the Effective Date until this Decree is terminated pursuant to Section XVIII (Termination); or (iii) until Defendants obtain a State license amendment that incorporates conditions at least as stringent as those set forth in subparagraphs (a) through (c) of this Paragraph 11.

12. Permits. Where any compliance obligation under this Section requires Defendants to obtain a federal, state, or local license, permit, or approval, Defendants shall submit timely and complete applications and take all other actions necessary to obtain all such licenses, permits, or approvals. Defendants may seek relief under the provisions of Section IX (Force Majeure) for any delay in the performance of any such obligation resulting from a failure to obtain, or a delay in obtaining, any permit or approval required to fulfill such obligation, if Defendants have submitted timely and complete applications and have taken all other actions necessary to obtain all such permits or approvals.

VI. SUPPLEMENTAL ENVIRONMENTAL PROJECT

13. To improve air quality, Defendants shall perform a Supplemental Environment Project ("SEP") to replace and/or retrofit inefficient, higher-polluting wood-burning appliances and technologies in accordance with all provisions of this Section. This SEP is undertaken in part to address VOC emissions from the Facility. The EPA finds that VOC and nitrogen oxide (NOx) emissions both contribute to the formation of ozone. Ozone can be harmful to human

ED_002592B_00013275-00032

health, by causing muscles in the airways to constrict, trapping air in the alveoli, making it more difficult to breathe deeply and vigorously, leading to shortness of breath and pain when taking deep breaths, causing coughing and sore or scratchy throat, inflaming and damaging airways, aggravating lung diseases such as asthma, emphysema, and chronic bronchitis, increasing the frequency of asthma attacks, making lungs more susceptible to infection, and causing chronic obstructive pulmonary disease. The replacement and/or retrofit of older wood-burning appliances and technologies will reduce NOx, and thus reduce ozone by addressing one of its precursors. In addition, the EPA finds that the SEP will help to reduce emissions of particulate matter, hazardous air pollutants ("HAPs"), and VOCs in Cumberland County, Maine.

14. Consistent with the requirements of this Section, Defendants shall submit a SEP Work Plan to implement a wood-burning appliance replacement and/or retrofit project in Cumberland County, Maine. Defendants may engage an appropriate non-profit organization, contractor or consultant to assist Defendants' implementation of the SEP ("Contractor"). Any such Contractor must be experienced in administering a wood-burning appliance replacement and/or retrofit project or be experienced with wood stove technology, experienced in performing community outreach, and otherwise qualified to assist Defendants' implementation of the SEP as set forth in this Section.

a. The SEP shall replace or retrofit inefficient, higher-polluting wood-burning or coal appliances with cleaner-burning, more energy-efficient heating appliances and technologies. The appliances that are replaced under this SEP shall be permanently removed from use and recycled/disposed of appropriately.

b. To qualify for the SEP, the wood burning appliance must be in regular use

in a primary residence or in a frequently used non-residential building (e.g., churches, greenhouses, schools) during the heating season, and preference shall be given to those appliances that are a primary or a significant source of heat.

c. Defendants shall spend no less than $150,000, exclusive of administrative costs, to implement the SEP. Defendants shall not use Project Dollars for any administrative costs associated with the implementation of the SEP, including any such costs incurred by any Contractor. Defendants shall devote all Project Dollars to providing the wood-burning appliance replacements and retrofits, as set forth in this Section. Defendants shall pay all administrative costs associated with implementing the SEP. "Administrative costs" shall include costs associated with community outreach, including the distribution of information regarding the SEP, as described below, and any other costs not spent on replacing or retrofitting wood-burning appliances, under this Section.

d. Every participant that receives a new wood-burning appliance or retrofit of an existing wood-burning appliance shall receive information related to proper operation of their new appliance and the benefits of proper operation (*e.g.*, lower emissions, better efficiency), including, if applicable, the importance of burning dry seasoned wood and provision of a wood moisture meter.

e. Within 30 Days from the Effective Date, Defendants shall submit a SEP Work Plan to the EPA for review and approval. Defendants shall describe how the SEP Work Plan is consistent with the requirements of this Section of the Consent Decree and shall also include the following information: (i) identification of any proposed Contractor; (ii) identification of any other entities with which the Contractor proposes to partner to implement

ED_002592B_00013275-00034

the SEP (*e.g.*, non-profit associations with expertise in wood stove technology and/or the health or environmental impacts of air pollution associated with wood stoves, weatherization offices, individual stove retailers, entities that will dispose of the old appliances); (iii) the type of appliances Defendants intend to make available through the SEP, the cost per unit, and the Project Dollars to be spent per unit; (iv) the criteria that will be used to determine which owners are income-qualified to receive full/near-full cost replacement, consistent with Paragraph 14.f., below; and (v) a description of proposed outreach to raise awareness of and interest in the availability of the wood-burning appliance replacement program within the Cumberland County, Maine area, as described in this Section and in the EPA-approved SEP Work Plan. Such outreach shall include the distribution of information about the SEP and benefits of retrofitting or replacing non-EPA certified wood-burning appliances with newer cleaner burning stoves, proper operation and installation of any wood burning appliances, and a description of financial and other incentives to participate in the SEP. Distribution channels for outreach may include, among other things, a dedicated website for the SEP, ads or public service announcements in media such as print, radio, television, and social media, press releases distributed to local and regional news outlets, wood stove retailers, gas and propane dealers, local fire departments, live presentations, phone banks, handing out leaflets, direct mail, and other appropriate means to convey information to residents of the Cumberland County, Maine area. .

f. Income eligibility of participants will be determined by proof of participation in a federal means-tested program that determines eligibility using the U.S. Department of Health and Human Services ("HHS") Poverty Guidelines, such as Supplemental Nutrition Assistance Program ("SNAP"); Head Start; National School Lunch Program; Special

Supplemental Nutrition Program for Women, Infants, and Children ("WIC"); Low-Income Home Energy Assistance Program ("LIHEAP"); Weatherization Assistance for Low-Income Persons; or other proof of "low income," defined as income between 100% and 185% of the federal poverty level under the HHS Poverty Guidelines.

g. Defendants shall complete the SEP no later than two years after the approval of the SEP Work Plan, in accordance with the schedule and requirements in the approved SEP Work Plan, except that Defendants may request an extension of time from EPA to complete the Project if it appears likely that the SEP will not be complete within such two-year period despite Defendants' best efforts to implement the Project. EPA may, in its sole, unreviewable discretion, grant Defendants' request.

h. Defendants are responsible for the satisfactory completion of the SEP in accordance with the requirements of this Consent Decree. Defendants may use a Contractor in planning and implementing the SEP and are responsible for any costs charged by any such Contractors.

i. After review of the SEP Work Plan described in Paragraph 14.e., EPA shall, in writing: (a) approve the submission; (b) approve the submission upon specified conditions; (c) approve part of the submission and disapprove the remainder; or (d) disapprove the submission.

j. If the SEP Work Plan is approved pursuant to Paragraph 14.i.(a), Defendants shall take all actions required by the plan, report, or other document, in accordance with the schedules and requirements of the plan, report, or other document, as approved. If the SEP Work Plan is conditionally approved or approved only in part pursuant to Paragraph 14.i.(b)

ED_002592B_00013275-00036

or 14.i(c), Defendants shall, upon written direction from EPA, take all actions required by the approved plan, report, or other item that EPA determines are technically severable from any disapproved portions, subject to Defendants' right to dispute only the specified conditions or the disapproved portions, under Section X (Dispute Resolution).

k. If the SEP Work Plan is disapproved in whole or in part pursuant to Paragraph 14.i.(c) or 14.i.(d), Defendants shall, within 30 Days or such other time as the Parties agree to in writing, correct all deficiencies and resubmit the plan, report, or other item, or disapproved portion thereof, for approval, in accordance with Paragraph 14.j. If the resubmission is approved in whole or in part, Defendants shall proceed in accordance with the Paragraph 14.j.

l. If a resubmitted SEP Work Plan or portion thereof is disapproved in whole or in part, EPA may again require Defendants to correct any deficiencies, or EPA itself may correct any deficiencies subject to Defendants' right to invoke dispute resolution in accordance with Section X (Dispute Resolution) and the right of EPA to seek stipulated penalties in accordance with Section VIII (Stipulated Penalties).

m. Any stipulated penalties applicable to the original SEP Work Plan submission, as provided in Section VIII (Stipulated Penalties), shall accrue during the 30-Day period or other specified period, but shall not be payable unless the resubmission is untimely or is disapproved in whole or in part; provided that, if the original submission was so deficient as to constitute a material breach of Defendants' obligations under this Decree, the stipulated penalties applicable to the original submission shall be due and payable notwithstanding any subsequent resubmission.

ED_002592B_00013275-00037

15. With regard to the SEP, Defendants certify the truth and accuracy of each of the following:

a. that all cost information provided to EPA in connection with EPA's approval of the SEP is complete and accurate and that Defendants in good faith estimate that the cost to implement the SEP, exclusive of administrative costs, is no less than $150,000.00;

b. that, as of the date of executing this Consent Decree, Defendants are not required to perform or develop the SEP by any federal, state, or local law or regulation and is not required to perform or develop the SEP by agreement, grant, or as injunctive relief awarded in any other action in any forum;

c. that the SEP is not a project that Defendants were planning or intending to construct, perform, or implement other than in settlement of the claims resolved in this Decree;

d. that Defendants have not received and will not receive credit for the SEP in any other enforcement action; and

e. that Defendants will not receive any reimbursement for any portion of the SEP from any other persons.

f. that Defendants are not a party to any Open Federal Financial Assistance Transaction that is funding or could fund the same activity as the SEP described in this Section.

g. that Defendants, before using any Contractor, have inquired whether it is a party to an Open Federal Financial Assistance Transaction that is funding or could fund the same activity as the SEP and has been informed by the Contractor that it is not a party to such a transaction.

ED_002592B_00013275-00038

16. SEP Completion Report. Within 90 Days after completion of the SEP, Defendants shall submit a SEP Completion Report to EPA in accordance with Section XIV (Notices) of this Consent Decree. The SEP Completion Report shall contain the following information:

a. a detailed description of the SEP as implemented;

b. a description of any problems encountered in completing the SEP and solutions thereto;

c. an itemized list of eligible SEP costs expended;

d. certification that the SEP has been fully implemented pursuant to the provisions of this Decree;

e. a description of the environmental and public health benefits resulting from implementation of the SEP (with a quantification of the benefits and pollutant reductions, if feasible).

17. EPA may, in its sole discretion, require information in addition to that described in Paragraph 16 (SEP Completion Report), in order to evaluate Defendants' SEP Completion Report.

18. After receiving the SEP Completion Report, the United States will notify Defendants whether or not Defendants have satisfactorily completed the SEP. If Defendants have not completed the SEP in accordance with this Consent Decree, stipulated penalties may be assessed under Section VIII (Stipulated Penalties) of this Decree.

ED_002592B_00013275-00039

19. Each submission required under this Section shall be signed by an official of Defendants with knowledge of the SEP and shall bear the certification language set forth in Paragraph 26.

20. Any public statement, oral or written, in print, film, or other media, made by Defendants making reference to a SEP under this Consent Decree shall include the following language: "This project was undertaken in connection with the settlement of an enforcement action, *United States v. Global Partners LP et al.*, taken on behalf of the U.S. Environmental Protection Agency under the Clean Air Act."

21. For federal and state income tax purposes, Defendants agree that that they will neither capitalize into inventory or basis nor deduct any costs or expenditures incurred in performing the SEP.

22. Defendants shall not deduct any amounts paid under this Consent Decree pursuant to this Section in calculating their federal, state, or local income tax.

VII. REPORTING REQUIREMENTS

23. Defendants shall submit the following reports:

a. By July 31 and January 31 of each year after the lodging of this Consent Decree, until termination of this Decree pursuant to Section XVIII (Termination), Defendants shall submit to EPA Region 1 and the United States Department of Justice, in accordance with Section XIV (Notices), a semi-annual report for the preceding six months that shall include at a minimum: the status of any construction or compliance measures; completion of milestones; discussion of Defendants' progress in satisfying their obligations in connection with the SEP under Section VI (Supplemental Environmental Project), including, a narrative description of

ED_002592B_00013275-00040

activities undertaken and the completion of any milestones set forth in the SEP Work Plan since the previous report, the number and type of appliances made available through the SEP, the cost per unit, and the number of Project Dollars spent; problems encountered or anticipated, together with implemented or proposed solutions; status of permit applications; operation and maintenance; any applications or reports submitted to state agencies; and a summary of costs incurred since the previous report.

b. The report shall also include a description of any non-compliance with the requirements of this Consent Decree and an explanation of the violation's likely cause and of the remedial steps taken, or to be taken, to prevent or minimize such violation. If any Defendant violates, or has reason to believe that it may violate, any requirement of this Consent Decree, Defendants shall notify the United States of such violation and its likely duration, in writing, within 10 working Days of the Day any Defendant first becomes aware of the violation, with an explanation of the violation's likely cause and of the remedial steps taken, or to be taken, to prevent or minimize such violation. If the cause of a violation cannot be fully explained at the time the report is due, Defendants shall so state in the report. Defendants shall investigate the cause of the violation and shall then submit an amendment to the report, including a full explanation of the cause of the violation, within 30 Days of the Day Defendants become aware of the cause of the violation. Nothing in this Paragraph or the following Paragraph relieves Defendants of their obligation to provide the notice required by Section IX (Force Majeure).

24. Whenever any violation of this Consent Decree or any other event affecting Defendants' performance under this Decree, may pose an immediate threat to the public health or welfare or the environment, Defendants shall notify EPA orally or by electronic or facsimile

ED_002592B_00013275-00041

transmission as soon as possible, but no later than 24 hours after Defendants first knew of the violation or event. This procedure is in addition to the requirements set forth in the preceding Paragraph.

25. All reports shall be submitted to the persons designated in Section XIV (Notices).

26. Each report submitted by Defendants under this Section shall be signed by an official of the submitting party and include the following certification:

> I certify under penalty of law that this document and all attachments were prepared under my direction or supervision in accordance with a system designed to assure that qualified personnel properly gather and evaluate the information submitted. Based on my inquiry of the person or persons who manage the system, or those persons directly responsible for gathering the information, the information submitted is, to the best of my knowledge and belief, true, accurate, and complete. I have no personal knowledge that the information submitted is other than true, accurate, and complete. I am aware that there are significant penalties for submitting false information, including the possibility of fine and imprisonment for knowing violations.

27. This certification requirement does not apply to emergency or similar notifications where compliance would be impractical.

28. The reporting requirements of this Consent Decree do not relieve Defendants of any reporting obligations required by the Act or implementing regulations, or by any other federal, state, or local law, regulation, permit, or other requirement.

29. Any information provided pursuant to this Consent Decree may be used by the United States in any proceeding to enforce the provisions of this Consent Decree and as otherwise permitted by law.

VIII. STIPULATED PENALTIES

30. Defendants shall be liable for stipulated penalties to the United States for violations of this Consent Decree as specified below, unless excused under Section IX (Force

ED_002592B_00013275-00042

Majeure). A violation includes failing to perform any obligation required by the terms of this Decree, including any work plan or schedule approved under this Decree, according to all applicable requirements of this Decree and within the specified time schedules established by or approved under this Decree.

31. Late Payment of Civil Penalty. If Defendants fail to pay the civil penalty required to be paid under Section IV (Civil Penalty) when due, Defendants shall pay a stipulated penalty of $1,000 per Day for each Day that the payment is late.

32. Injunctive Requirements. The following stipulated penalties shall accrue per violation per Day for each violation of a requirement of Paragraph 11 (regarding product storage conditions, tank heating conditions, throughput limits, supplemental measures, state license application requirements):

Penalty Per Violation Per Day	Period of Noncompliance
$1,000	1st through 14th Day
$1,500	15th through 30th Day
$2,000	31st Day and beyond

33. Reporting Requirements. The following stipulated penalties shall accrue per violation per Day for each violation of the reporting requirements of Section VII (Reporting Requirements), or the requirements to timely submit to EPA a SEP Work Plan and a SEP Completion Report, under Section VI (Supplemental Environmental Project):

Penalty Per Violation Per Day	Period of Noncompliance
$250	1st through 14th Day
$500	15th through 30th Day
$750	31st Day and beyond

34. SEP Compliance. If Defendants fail to satisfactorily complete the SEP by the deadline set forth in Section VI (Supplemental Environmental Project), subject to any extension pursuant to Paragraph 14.g., Defendants shall pay stipulated penalties for each day for which they fail to satisfactorily complete the SEP, as follows:

Penalty Per Violation Per Day	Period of Noncompliance
$750	1st through the 14th Day
$1,250	15th through 30th Day
$1,750	31st Day and beyond

35. Stipulated penalties under this Section shall begin to accrue on the Day after performance is due or on the Day a violation occurs, whichever is applicable, and shall continue to accrue until performance is satisfactorily completed or until the violation ceases. Stipulated penalties shall accrue simultaneously for separate violations of this Consent Decree.

36. Defendants shall pay any stipulated penalty within 30 Days of receiving the United States' written demand.

37. The United States may in the unreviewable exercise of its discretion, reduce or waive stipulated penalties otherwise due it under this Consent Decree.

38. Stipulated penalties shall continue to accrue as provided in Paragraph 35, during any Dispute Resolution, but need not be paid until the following:

a. If the dispute is resolved by agreement of the Parties or by a decision of EPA that is not appealed to the Court, Defendants shall pay accrued penalties determined to be owing, together with interest, to the United States within 30 Days of the effective date of the agreement or the receipt of EPA's decision or order.

b. If the dispute is appealed to the Court and the United States prevails in

ED_002592B_00013275-00044

whole or in part, Defendants shall pay all accrued penalties determined by the Court to be owing, together with interest, within 60 Days of receiving the Court's decision or order, except as provided in subparagraph (c) of this Paragraph, below.

c. If any Party appeals the District Court's decision, Defendants shall pay all accrued penalties determined to be owing, together with interest, within 15 Days of receiving the final appellate court decision.

39. Defendants shall pay stipulated penalties owing to the United States in the manner set forth and with the confirmation notices required by Paragraph 9, except that the transmittal letter shall state that the payment is for stipulated penalties and shall state for which violation(s) the penalties are being paid.

40. If Defendants fail to pay stipulated penalties according to the terms of this Consent Decree, Defendants shall be liable for interest on such penalties, as provided for in 28 U.S.C. § 1961, accruing as of the date payment became due. Nothing in this Paragraph shall be construed to limit the United States from seeking any remedy otherwise provided by law for Defendants' failure to pay any stipulated penalties.

41. The payment of penalties and interest, if any, shall not alter in any way Defendants' obligation to complete the performance of the requirements of this Consent Decree.

42. Non-Exclusivity of Remedy. Stipulated penalties are not the United States' exclusive remedy for violations of this Consent Decree. Subject to the provisions of Section XII (Effect of Settlement/Reservation of Rights), the United States expressly reserves the right to seek any other relief it deems appropriate for Defendants' violation of this Decree or applicable law, including but not limited to an action against Defendants for statutory penalties, additional

ED_002592B_00013275-00045

injunctive relief, mitigation or offset measures, and/or contempt. However, the amount of any statutory penalty assessed for a violation of this Consent Decree shall be reduced by an amount equal to the amount of any stipulated penalty assessed and paid pursuant to this Consent Decree.

IX. FORCE MAJEURE

43. "Force majeure," for purposes of this Consent Decree, is defined as any event arising from causes beyond the control of Defendants, any entity controlled by Defendants, or any of Defendants' contractors, that delays or prevents the performance of any obligation under this Consent Decree despite Defendants' best efforts to fulfill the obligation. The requirement that Defendants exercise "best efforts to fulfill the obligation" includes using best efforts to anticipate any potential force majeure event and best efforts to address the effects of any potential force majeure event (a) as it is occurring and (b) following the potential force majeure, such that the delay and any adverse effects of the delay are minimized. "Force Majeure" does not include Defendants' financial inability to perform any obligation under this Consent Decree.

44. If any event occurs or has occurred that may delay the performance of any obligation under this Consent Decree, whether or not caused by a force majeure event, Defendants shall provide notice orally or by electronic transmission to EPA within 72 hours of when Defendants first knew that the event might cause a delay. Within seven (7) Days thereafter, Defendants shall provide in writing to EPA an explanation and description of the reasons for the delay; the anticipated duration of the delay; all actions taken or to be taken to prevent or minimize the delay; a schedule for implementation of any measures to be taken to prevent or mitigate the delay or the effect of the delay; Defendants' rationale for attributing such delay to a force majeure event if it intends to assert such a claim; and a statement as to whether,

in the opinion of Defendants, such event may cause or contribute to an endangerment to public health, welfare or the environment. Defendants shall include with any notice all available documentation supporting the claim that the delay was attributable to a force majeure. Failure to comply with the above requirements shall preclude Defendants from asserting any claim of force majeure for that event for the period of time of such failure to comply, and for any additional delay caused by such failure.

45. If EPA agrees that the delay or anticipated delay is attributable to a force majeure event, the time for performance of the obligations under this Consent Decree that are affected by the force majeure event will be extended by EPA for such time as is necessary to complete those obligations. An extension of the time for performance of the obligations affected by the force majeure event shall not, of itself, extend the time for performance of any other obligation. EPA will notify Defendants in writing of the length of the extension, if any, for performance of the obligations affected by the force majeure event.

46. If EPA does not agree that the delay or anticipated delay has been or will be caused by a force majeure event, EPA will notify Defendants in writing of its decision.

47. If Defendants elect to invoke the dispute resolution procedures set forth in Section X (Dispute Resolution), they shall do so no later than 15 Days after receipt of EPA's notice. In any such proceeding, Defendants shall have the burden of demonstrating by a preponderance of the evidence that the delay or anticipated delay has been or will be caused by a force majeure event, that the duration of the delay or the extension sought was or will be warranted under the circumstances, that best efforts were exercised to avoid and mitigate the effects of the delay, and that Defendants complied with the requirements of Paragraphs 43 and

ED_002592B_00013275-00047

44. If Defendants satisfy this burden, the delay at issue shall be deemed not to be a violation by Defendants of the affected obligation of this Consent Decree identified to EPA and the Court.

X. DISPUTE RESOLUTION

48. Unless otherwise expressly provided for in this Consent Decree, the dispute resolution procedures of this Section shall be the exclusive mechanism to resolve disputes arising under or with respect to this Consent Decree.

49. Informal Dispute Resolution. Any dispute subject to dispute resolution under this Consent Decree shall first be the subject of informal negotiations. The dispute shall be considered to have arisen when Defendants send the United States a written Notice of Dispute. Such Notice of Dispute shall state clearly the matter in dispute. The period of informal negotiations shall not exceed 20 Days from the date the dispute arises, unless that period is modified by written agreement. If the Parties cannot resolve a dispute by informal negotiations, then the position advanced by the United States shall be considered binding unless, within 10 Days after the conclusion of the informal negotiation period, Defendants invokes formal dispute resolution procedures as set forth below.

50. Formal Dispute Resolution. Defendants shall invoke formal dispute resolution procedures, within the time period provided in the preceding Paragraph, by serving on the United States a written Statement of Position regarding the matter in dispute. The Statement of Position shall include, but need not be limited to, any factual data, analysis, or opinion supporting Defendants' position and any supporting documentation relied upon by Defendants.

51. The United States shall serve its Statement of Position within 45 Days of receipt of Defendants' Statement of Position. The United States' Statement of Position shall include,

ED_002592B_00013275-00048

but need not be limited to, any factual data, analysis, or opinion supporting that position and any supporting documentation relied upon by the United States. The United States' Statement of Position shall be binding on Defendants, unless Defendants file a motion for judicial review of the dispute in accordance with the following Paragraph.

52. Defendants may seek judicial review of the dispute by filing with the Court and serving on the United States, in accordance with Section XIV (Notices), a motion requesting judicial resolution of the dispute. The motion must be filed within 14 Days of receipt of the United States' Statement of Position pursuant to the preceding Paragraph. The motion shall contain a written statement of Defendants' position on the matter in dispute, including any supporting factual data, analysis, opinion, or documentation, and shall set forth the relief requested and any schedule within which the dispute must be resolved for orderly implementation of the Consent Decree.

53. The United States shall respond to Defendants' motion within the time period allowed by the Local Rules of this Court. Defendants may file a reply memorandum, to the extent permitted by the Local Rules.

54. Standard of Review

a. Disputes Concerning Matters Accorded Record Review. Except as otherwise provided in this Consent Decree, in any dispute brought under Paragraph 50 pertaining to the adequacy or appropriateness of plans, procedures to implement plans, schedules or any other items requiring approval by EPA under this Consent Decree; the adequacy of the performance of work undertaken pursuant to this Consent Decree; and all other disputes that are accorded review on the administrative record under applicable principles of administrative law,

Defendants shall have the burden of demonstrating, based on the administrative record, that the position of the United States is arbitrary and capricious or otherwise not in accordance with law.

b. Other Disputes. Except as otherwise provided in this Consent Decree, in any other dispute brought under Paragraph 50, Defendants shall bear the burden of demonstrating that their position complies with this Consent Decree and better furthers the objectives of the Consent Decree.

55. The invocation of dispute resolution procedures under this Section shall not, by itself, extend, postpone, or affect in any way any obligation of Defendants under this Consent Decree, unless and until final resolution of the dispute so provides. Stipulated penalties with respect to the disputed matter shall continue to accrue from the first Day of noncompliance, but payment shall be stayed pending resolution of the dispute as provided in Paragraph 38. If Defendants do not prevail on the disputed issue, stipulated penalties shall be assessed and paid as provided in Section VIII (Stipulated Penalties).

XI. INFORMATION COLLECTION AND RETENTION

56. The United States and its representatives, including attorneys, contractors, and consultants, shall have the right of entry into the Facility covered by this Consent Decree, at all reasonable times, upon presentation of credentials, to:

a. monitor the progress of activities required under this Consent Decree;

b. verify any data or information submitted to the United States in accordance with the terms of this Consent Decree;

c. obtain samples and, upon request, splits of any samples taken by Defendants or its representatives, contractors, or consultants;

ED_002592B_00013275-00050

d. obtain documentary evidence, including photographs and similar data; and

e. assess Defendants' compliance with this Consent Decree.

57. Upon written request, Defendants shall provide EPA or its authorized representatives splits of any samples taken by Defendants in connection with this Consent Decree. Upon request, EPA shall provide Defendants splits of any samples taken by EPA.

58. Until five years after the termination of this Consent Decree, Defendants shall retain, and shall instruct their contractors and agents to preserve, all non-identical copies of all documents, records, or other information (including documents, records, or other information in electronic form) in their or their contractors' or agents' possession or control, or that come into their or their contractors' or agents' possession or control, and that relate in any manner to Defendants' performance of their obligations under this Consent Decree. This information-retention requirement shall apply regardless of any contrary corporate or institutional policies or procedures. At any time during this information-retention period, upon request by the United States, Defendants shall provide copies of any documents, records, or other information required to be maintained under this Paragraph.

59. At the conclusion of the information-retention period provided in the preceding Paragraph, Defendants shall notify the United States at least 90 Days prior to the destruction of any documents, records, or other information subject to the requirements of the preceding Paragraph and, upon request by the United States, Defendants shall deliver any such documents, records, or other information to EPA. Defendants may assert that certain documents, records, or other information is privileged under the attorney-client privilege or any other privilege recognized by federal law. If Defendants asserts such a privilege, they shall provide the

following: (a) the title of the document, record, or information; (b) the date of the document, record, or information; (c) the name and title of each author of the document, record, or information; (d) the name and title of each addressee and recipient; (e) a description of the subject of the document, record, or information; and (f) the privilege asserted by Defendants. However, no documents, records, or other information created or generated pursuant to the requirements of this Consent Decree shall be withheld on grounds of privilege.

60. Defendants may also assert that information required to be provided under this Section is protected as Confidential Business Information ("CBI") under 40 C.F.R. Part 2. As to any information that Defendants seek to protect as CBI, Defendants shall follow the procedures set forth in 40 C.F.R. Part 2.

61. This Consent Decree in no way limits or affects any right of entry and inspection, or any right to obtain information, held by the United States pursuant to applicable federal or state laws, regulations, or permits, nor does it limit or affect any duty or obligation of Defendants to maintain documents, records, or other information imposed by applicable federal or state laws, regulations, or permits.

XII. EFFECT OF SETTLEMENT/RESERVATION OF RIGHTS

62. This Consent Decree resolves the civil claims of the United States for the violations alleged in the Complaint filed in this action through the date of lodging.

63. The United States reserves all legal and equitable remedies available to enforce the provisions of this Consent Decree. This Consent Decree shall not be construed to limit the rights of the United States to obtain penalties or injunctive relief under the Act or implementing regulations, or under other federal laws, regulations, or permit conditions. The United States

ED_002592B_00013275-00052

further reserves all legal and equitable remedies to address any imminent and substantial endangerment to the public health or welfare or the environment arising at, or posed by, Defendants' Facility, whether related to the violations addressed in this Consent Decree or otherwise.

64. In any subsequent administrative or judicial proceeding initiated by the United States for injunctive relief, civil penalties, other appropriate relief relating to the Facility or a Defendants' violations, Defendants shall not assert, and may not maintain, any defense or claim based upon the principles of waiver, res judicata, collateral estoppel, issue preclusion, claim preclusion, claim-splitting, or other defenses based upon any contention that the claims raised by the United States in the subsequent proceeding were or should have been brought in the instant case, except with respect to claims that have been specifically resolved pursuant to Paragraph 62.

65. This Consent Decree is not a permit, or a modification of any permit, under any federal, State, or local laws or regulations. Defendants are responsible for achieving and maintaining complete compliance with all applicable federal, State, and local laws, regulations, and permits; and Defendants' compliance with this Consent Decree shall be no defense to any action commenced pursuant to any such laws, regulations, or permits, except as set forth herein. The United States does not, by its consent to the entry of this Consent Decree, warrant or aver in any manner that Defendants' compliance with any aspect of this Consent Decree will result in compliance with provisions of the Act, 42 U.S.C. § 7401 et seq., or with any other provisions of federal, State, or local laws, regulations, or permits.

66. This Consent Decree does not limit or affect the rights of Defendants or of the United States against any third parties, not party to this Consent Decree, nor does it limit the

ED_002592B_00013275-00053

rights of third parties, not party to this Consent Decree, against Defendants, except as otherwise provided by law.

67. This Consent Decree shall not be construed to create rights in, or grant any cause of action to, any third party not party to this Consent Decree.

XIII. COSTS

68. The Parties shall bear their own costs of this action, including attorneys' fees, except that the United States shall be entitled to collect the costs (including attorneys' fees) incurred in any action necessary to collect any portion of the civil penalty or any stipulated penalties due but not paid by Defendants.

XIV. NOTICES

69. Unless otherwise specified herein, whenever notifications, submissions, statements of position, or communications are required by this Consent Decree (referred in this Paragraph as a "notice" or "notices"), they shall be made electronically as described below, unless such notices are unable to be uploaded to the CDX electronic system (in the case of EPA) or transmitted by email (in the case of any other party). For all notices to EPA, Defendants shall register for the CDX electronic system and upload such notices at https://cdx.epa.gov/epa_home.asp. Any notice that cannot be uploaded or electronically transmitted via email shall be provided in writing to the addresses below:

ED_002592B_00013275-00054

As to the United States by email:	eescdcopy.enrd@usdoj.gov Re: DJ # 90-5-2-1-11428
As to the United States by mail:	EES Case Management Unit Environment and Natural Resources Division U.S. Department of Justice P.O. Box 7611 Washington, D.C. 20044-7611 Re: DJ # 90-5-2-1-11428
As to EPA:	Christine Sansevero Senior Enforcement Coordinator U.S. EPA, Region 1 5 Post Office Square Suite 100 – OES04-2 Boston, MA 02109-3912 Email: Sansevero.Christine@epa.gov William Chin Enforcement Counsel U.S. EPA, Region 1 5 Post Office Square Suite 100 – OES04-4 Boston, MA 02109-3912 Email: chin.bill@epa.gov
As to Defendants:	Global Partners LP 800 South Street, Suite 500 Waltham, MA 02453 Attn: Edward J. Faneuil Tel: 781-398-4211 Email: efaneuil@globalp.com Global Partners LP 800 South Street, Suite 500 Waltham, MA 02453 Attn: Tom Keefe Tel: 781-398-4132 Email: tkeefe@globalp.com

ED_002592B_00013275-00055

With a copy to:

Nutter McClennen & Fish LLP
155 Seaport Boulevard
Seaport West
Boston, MA 02210
Attn: Michael Leon
Tel: 617-439-2815
Email: mleon@nutter.com

70. Any Party may, by written notice to the other Parties, change its designated notice recipient or notice address provided above.

71. Notices submitted pursuant to this Section shall be deemed submitted upon mailing, unless otherwise provided in this Consent Decree or by mutual agreement of the Parties in writing.

XV. EFFECTIVE DATE

72. The Effective Date of this Consent Decree shall be the date upon which this Consent Decree is entered by the Court or a motion to enter the Consent Decree is granted, whichever occurs first, as recorded on the Court's docket; provided, however, that Defendants hereby agree that they shall be bound to perform duties scheduled to occur prior to the Effective Date. In the event the United States withdraws or withholds consent to this Consent Decree before entry, or the Court declines to enter the Consent Decree, then the preceding requirement to perform duties scheduled to occur before the Effective Date shall terminate.

XVI. RETENTION OF JURISDICTION

73. The Court shall retain jurisdiction over this case until termination of this Consent Decree, for the purpose of resolving disputes arising under this Decree or entering orders modifying this Decree, pursuant to Sections X and XVII (Dispute Resolution and Modification, respectively), or effectuating or enforcing compliance with the terms of this Decree.

ED_002592B_00013275-00056

XVII. MODIFICATION

74. The terms of this Consent Decree, including any attached appendices, may be modified only by a subsequent written agreement signed by all the Parties. Where the modification constitutes a material change to this Decree, it shall be effective only upon approval by the Court.

75. Any disputes concerning modification of this Decree shall be resolved pursuant to Section X (Dispute Resolution). The Party seeking the modification bears the burden of demonstrating that it is entitled to the requested modification in accordance with Federal Rule of Civil Procedure 60(b).

XVIII. TERMINATION

76. After Defendants have (i) installed the Equipment pursuant to Paragraph 11(d) and thereafter maintained satisfactory compliance with the requirements of Section V (Compliance Requirements) for a period of five years, (ii) completed the SEP pursuant to Section VI, (iii) complied with all other requirements of this Consent Decree, and (iv) paid the civil penalty and any accrued stipulated penalties as required by this Consent Decree, Defendants may serve upon the United States a Request for Termination, stating that Defendants have satisfied those requirements, together with all necessary supporting documentation.

77. Following receipt by the United States of Defendants' Request for Termination, the Parties shall confer informally concerning the Request and any disagreement that the Parties may have as to whether Defendants have satisfactorily complied with the requirements for termination of this Consent Decree. If the United States agrees that the Decree may be

ED_002592B_00013275-00057

terminated, the Parties shall submit, for the Court's approval, a joint stipulation terminating the Decree.

78. If the United States does not agree that the Decree may be terminated, Defendants may invoke Dispute Resolution under Section X (Dispute Resolution). However, Defendants shall not seek Dispute Resolution of any dispute regarding termination until 60 Days after service of their Request for Termination.

XIX. PUBLIC PARTICIPATION

79. This Consent Decree shall be lodged with the Court for a period of not less than 30 Days for public notice and comment in accordance with 28 C.F.R. § 50.7. The United States reserves the right to withdraw or withhold its consent if the comments regarding the Consent Decree disclose facts or considerations indicating that the Consent Decree is inappropriate, improper, or inadequate. Defendants consent to entry of this Consent Decree without further notice and agree not to withdraw from or oppose entry of this Consent Decree by the Court or to challenge any provision of the Decree, unless the United States has notified Defendants in writing that it no longer supports entry of the Decree.

XX. SIGNATORIES/SERVICE

80. Each undersigned representative of Defendants and the Assistant Attorney General for the Environment and Natural Resources Division of the U.S. Department of Justice certifies that he or she is fully authorized to enter into the terms and conditions of this Consent Decree and to execute and legally bind the Party he or she represents to this document.

81. This Consent Decree may be signed in counterparts, and its validity shall not be challenged on that basis. Defendants agree to accept service of process by mail with respect to

ED_002592B_00013275-00058

all matters arising under or relating to this Consent Decree and to waive the formal service requirements set forth in Rules 4 and 5 of the Federal Rules of Civil Procedure and any applicable Local Rules of this Court including, but not limited to, service of a summons. Defendants need not file an answer to the complaint in this action unless or until the Court expressly declines to enter this Consent Decree.

XXI. INTEGRATION

82. This Consent Decree constitutes the final, complete, and exclusive agreement and understanding among the Parties with respect to the settlement embodied in the Decree and supersedes all prior agreements and understandings, whether oral or written, concerning the settlement embodied herein. Other than deliverables that are subsequently submitted and approved pursuant to this Decree, the Parties acknowledge that there are no representations, agreements, or understandings relating to the settlement other than those expressly contained in this Consent Decree.

XXII. FINAL JUDGMENT

83. Upon approval and entry of this Consent Decree by the Court, this Consent Decree shall constitute a final judgment of the Court as to the United States and Defendants. The Court finds that there is no just reason for delay and therefore enters this judgment as a final judgment under Fed. R. Civ. P. 54 and 58.

XXIII. 26 U.S.C. SECTION 162(f)(2)(A)(ii) IDENTIFICATION

84. For purposes of the identification requirement of Section 162(f)(2)(A)(ii) of the Internal Revenue Code, 26 U.S.C. § 162(f)(2)(A)(ii), performance of Section II (Applicability), Paragraph 5; Section V (Compliance Requirements), Paragraphs 11-12; Section VII (Reporting),

ED_002592B_00013275-00059

Paragraphs 23 and 25-26 (except with respect to the SEP); and Section XI (Information Collection and Retention), Paragraphs 56-59, is restitution or required to come into compliance with law.

XXIV. APPENDIX

85. The following appendix is attached to and part of this Consent Decree:

Appendix A is the Work Plan for the Supplemental Measures identified in Section V (Compliance Requirements).

Dated and entered this _____ day of _____, 2019

_____
UNITED STATES DISTRICT JUDGE

ED_002592B_00013275-00060

FOR THE UNITED STATES OF AMERICA:

Dated: March 20, 2019

ELLEN M. MAHAN
Deputy Section Chief
Environmental Enforcement Section
Environment and Natural Resources Division
U.S. Department of Justice

Dated: March 20, 2019

Patrick B. Bryan

PATRICK B. BRYAN
Trial Attorney
DAVID L. WEIGERT
Senior Counsel
Environmental Enforcement Section
Environment and Natural Resources Division
U.S. Department of Justice
P.O. Box 7611
Washington, D.C. 20044-7611
(202) 616-8299 (PB)
(202) 514-0133 (DW)
patrick.bryan@usdoj.gov
david.weigert@usdoj.gov

ED_002592B_00013275-00061

FOR THE U.S. ENVIRONMENTAL PROTECTION AGENCY:

Dated: March 1, 2019

KAREN MCGUIRE
Director
Office of Environmental Stewardship
U.S. Environmental Protection Agency, Region 1

Dated: 2/27, 2019

WILLIAM D. CHIN
Enforcement Counsel
Office of Environmental Stewardship
U.S. Environmental Protection Agency, Region 1

FOR GLOBAL PARTNERS LP:

Date: February 25, 2019

Edward J. Farrell

Title: Executive Vice President

ED_002592B_00013275-00063

FOR GLOBAL COMPANIES LLC:

Date: February 25, 2019

Edward J. Emmett

Title: Executive Vice President

FOR CHELSEA SANDWICH LLC:

Date: February 25, 2019

Edward J. Fuchs

Title: Executive Vice President

APPENDIX A

Proposed Work Plan

for Heated Residual Oil Bulk Storage Tanks

at Global S. Portland Terminal

Pursuant to the proposed Consent Decree between Global Companies LLC ("Global") and the United States, Global provides the following work plan for the installation, operation, and maintenance of mist eliminators (the "Equipment") for the Heated Bulk Storage Tanks at the Facility that contain No. 6 oil or asphalt ("the Plan"). As described below, this Plan provides background information regarding the chosen Equipment, the conceptual design of the Equipment, inspection, operation and maintenance procedures and implementation schedule.

Background

Global is proposing to install the Equipment on the heated bulk storage tanks containing residual oil (No. 6 fuel oil or asphalt) at Global's South Portland terminal. The purpose of the Equipment is to reduce mists emanating from the heated bulk storage tank vents during venting which consist of the following two mechanisms.

1. Breathing Losses – expansion of the tank headspace volume due to ambient temperature changes and heating of the residual oil stored in the tank.

2. Working Losses – displacement of the tank headspace during filling of the tank.

The table below details the four heated bulk storage tanks at the S. Portland terminal currently used for storage of residual oil products.

Tank ID	Contents	Capacity (Gallons)	Diameter (Feet)	Height (Feet)	Number Of Vents
No. 1	No. 6 Fuel Oil	2,300,000	114.5	30	2
No. 2*	No. 6 Fuel Oil	2,300,000	114.5	30	2
No. 3	Asphalt	2,300,000	114.5	30	2
No. 9	Asphalt	3,360,000	120	40	1

*Tank currently empty and heat is off.

The Equipment

The Equipment consists of two components; 1) vent capture ducts, and 2) mist separation devices. As described below, the vent capture ducts will direct any vapors from the existing vents on the heated bulk storage tank roofs to ground-level mist separation devices, which will remove liquid aerosols and collect condensate as a means to reduce mists emanating from the heated bulk storage tanks. The principle of the mist separation devices is impaction and coalescing of the vapor. Impaction is a result of the filter creating an irregular path for the air stream surface that intercepts the mist and aerosols. As the individual liquid droplets impact on the filter surface, they merge into larger droplets allowing them to drop out the gas stream by gravity to a liquid collection basin.

Vent Capture Ducts

Standard fixed roof oil tank design requires the use of open vent(s) to assure that positive pressure (created by filling or thermal expansion) and negative pressure (created by pumping oil out of the tank for distribution or thermal contraction) does not damage the tank structural integrity. The proposed Equipment is designed to allow the air in and out through the ductwork extending to the ground and into the mist separation device. The vent capture ducts will be affixed to each of the two vents at the top of the tank and to the two ground level mist separation devices as illustrated in Figure 1. The duct will be tight fitting in order to eliminate the effect of wind. The 10 inch duct will be constructed of Schedule 10, 304 stainless steel to minimize any corrosive effects of the vapors.

In order to assure that an inadvertent clog of the Equipment does not create a negative or positive pressure condition that could negatively impact the tank, a pressure vacuum relief valve (**PVRV**) will be part of each capture duct at the top of the tanks. From a tank safety perspective, the proposed configuration will have redundancy of two separate mist eliminator systems for each tank in addition to the pressure/vacuum protection afforded by the PVRV within each of the two vent capture ducts. Attachment 1 provides technical specifications for the Model 1220A PVRV technology provided by Groth Corporation. The PVRV can be adjusted to various pressure/vacuum release levels. Because the tanks have been deemed to be capable of handling pressure up to 1.5 inch WG, the PVRV will be set for its lowest safety level of 0.87 inch WG to protect the tank. The first level of safety will be the mist separation device being designed to not exceed 0.2 inch WG.

Because Tank 9 is presently equipped with a single large single roof vent, a plate will be configured over the existing 24 inch opening with two smaller 10 inch openings as illustrated in Figure 2. Each of the two smaller openings will be fitted to a capture duct equipped with a PVRV in order to have the same safety redundancy as Tanks 1, 2 and 3.

Mist Separation Device

Tank headspace vapors entering the vent capture ducts will be directed down to a ground mounted mist separation device. Attachment 2 provides proposed design information of the passive tank vent mist separation system provided by Applied Contaminant Control Ltd (ACC) in Edmonton, Canada. In order to assure that the device does not create a pressure restriction that could negatively impact the tank, the mesh pad design specifies that it can handle a tank-filling rate of 3,500 barrels/hour. Historical tank filling records show that 3,500 barrel/hour is the maximum pump rate for the majority of ships/barges that deliver to the South Portland terminal. In the event that a ship/barge is equipped with a higher capacity pump, Global will mandate that the pump rate be set at 3,500 barrels/hour or less.

The mist separation device is equipped with a stainless steel mesh pad to remove liquid aerosols. The liquid condensate will be collected manually via a drain mechanism at the bottom of the device. Attachment 3 provides extensive literature regarding mist eliminator technology provided by AMACS of Houston, TX. The literature covers a wide spectrum of mist eliminator technologies and explains the key criteria for selection the most appropriate mesh pad for a given application. Based on review of the literature, the key variables are; anticipated droplet size, gas velocity, gas temperature, and mist composition. Per AMACS, the residual oil mist composition (having a corrosive characteristic) and high potential vapor temperature dictate that the mesh pad for the Global South Portland application be a stainless steel product. The gas velocity relates to pressure drop across the filter pad. For tank safety purposes, the proposed mesh pad is designed to not exceed 0.2 inches WG at the maximum filling rate of 3,500 barrels/hour.

Operation & Maintenance

Operation and maintenance of the proposed Equipment will utilize a differential pressure (DP) gauge measuring the pressure drop across the mesh pad. As illustrated in the ACC proposal provided in Attachment 2 (labeled DP), pressure sensors will be located on either side of the pad with a gauge display on the exterior of the mist collector for ease of visual reading the display. If the pressure exceeds 0.2 inches WG, the filter will be cleaned or replaced as quickly as possible. Note that the 0.2 inches WG provides are large safety factor to protect the tank that has been deemed capable of handling up to 1.5 inches WG. Global will maintain extra filters so that filters are immediately available. Removed filters will be cleaned and available for reuse. The collected condensate will be drained as needed manually.

A schedule for inspecting the Equipment, draining the collected condensate and inspecting the PVRV will be established by experience. Because it is not possible to close the ductwork entering the Equipment, Global will conduct any required maintenance as quickly as practicable and shall schedule all non-emergency maintenance to minimize disruptions in the operation of the Equipment and at times when loading of a tank is not occurring. Initially, the Equipment and PVRV will be inspected daily and every four hours during loading events, and the

observation of the liquid level in the mist eliminator will be made daily. These inspections will be adjusted as necessary following implementation, with an updated schedule of inspections to be included in the compliance reports submitted to EPA per the Consent Decree.

Recordkeeping

Documentation of operation and maintenance activities shall be as follows.

a. Pressure drop across the mesh pad:
    i. Monitored (and recorded in a log) daily
    ii. Monitored (and recorded in a log) every four hours during tank filling operations
b. Inspection of the equipment and the PVRV to evaluate proper operation (using methods of sight, sound and smell):
    i. Monitored (and recorded in a log) daily
    ii. Monitored (and recorded in a log) every four hours during tank filling operations
c. Record each time the mesh pad is changed and/or cleaned
d. Record each time the liquid condensate is removed from the equipment
e. Record any known release of vapors through the PVRV

Adjustments to this schedule and justification for those adjustments will be reported to EPA in the periodic compliance reports required by the consent decree.

Implementation Schedule

As required in the proposed Consent Decree, Global will install the Equipment within 180 Days of the Effective Date of the Consent Decree on the heated bulk storage tanks in service (Tanks 1, 3 and 9) at the Facility. Tank 2 installation of Equipment will be done prior to being filled and heat applied. Below is the anticipated implementation schedule from the data of EPA approval.

- Issue Purchase Order the Equipment
- 15 days – produce detailed engineering drawings for Global approval
- 15 days – approve engineering drawing and release to fabrication
- 120 days - fabrication of mist eliminator and order mist pads, fabrication of ductwork, order PVRVs, apply/obtain state and local building permits
- 30 days – installation

Total = 180 days

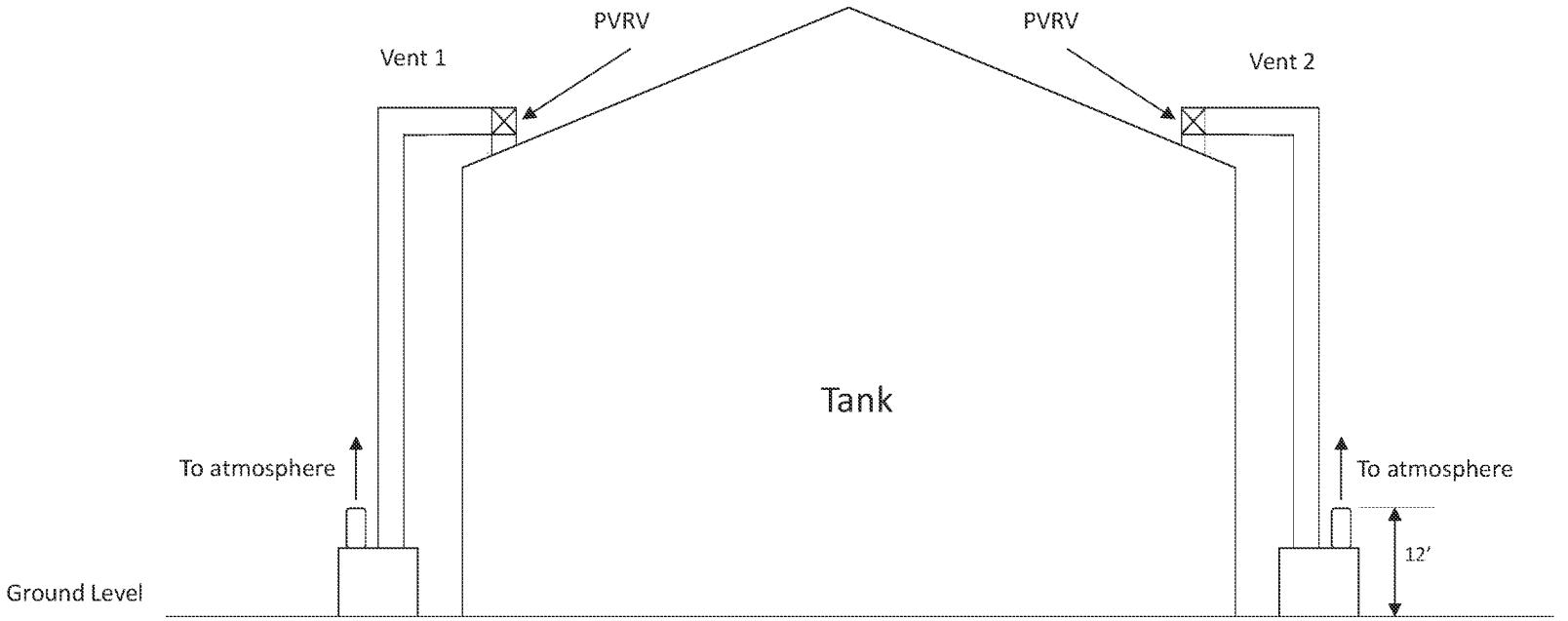

Figure 1. Layout of Heated Tank Vent Control Equipment

ED_002592B_00013275-00071

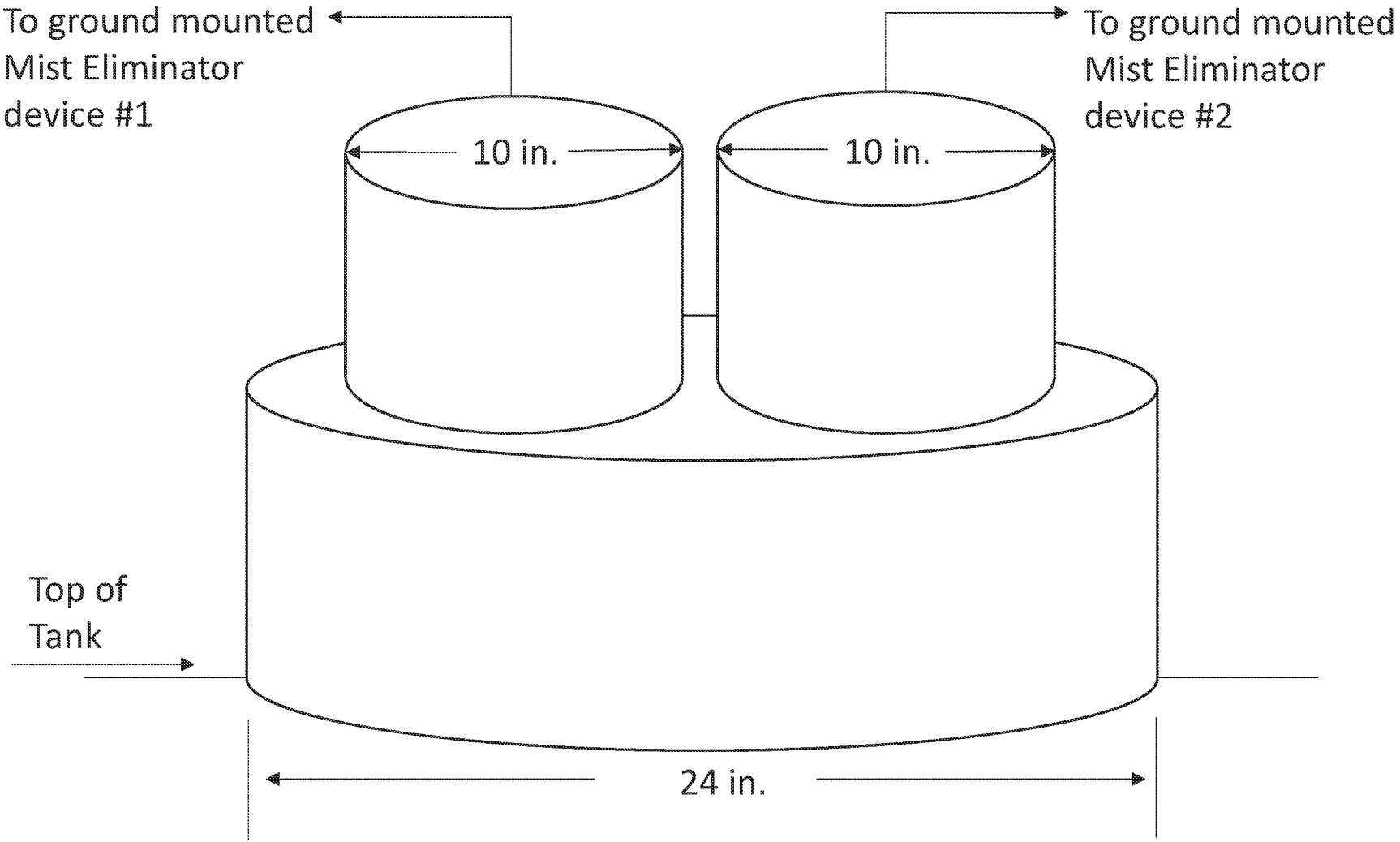

Figure 2. Tank 9 Vent Separation Plate

ED_002592B_00013275-00072

Attachment 1

PVRV Information

From Goth Corporation

VALVES

& TANK EQUIPMENT

GROTH CORPORATION®
a Continental Disc company

SAFETY PRODUCTS THAT PROTECT EQUIPMENT, LIVES & THE ENVIRONMENT

TABLE OF CONTENTS

MODEL NUMBER	MODEL DESCRIPTION	PAGE #
PRESSURE/VACUUM RELIEF VALVES		
1200A, 1201B, 1202B, 1203A	Pressure/Vacuum Relief Valves	3-12
SERIES 1800A	Full Lift Type Pressure/Vacuum Relief Valves	13-24
1220A, 1221B, 1222B, 1223B	Pressure/Vacuum Relief Valves with Pipe-Away Feature	25-34
1720A, 1760A	Pressure/Vacuum Relief Valves with Pipe-Away Feature	35-38
12-TH	Thief Hatch	39-42
PRESSURE OR VACUUM RELIEF VALVES		
1260A, 1261A	Pressure Relief Valves	43-48
2300A, 2301A	Pressure Relief Valves	49-54
1300A, 1301A	Vacuum Relief Valves, Top Mount	55-60
1360A, 1361A	Vacuum Relief Valves, Side Mount	61-66
5000, 5100	Pressure/Vacuum Free Vents, Top Mount	67-76
6000, 6100	Gauge Hatches	77-78
2000A, 2050A	Emergency Relief Valves, Weight Loaded	79-82
2100	Emergency Relief Valves, Spring Loaded	83-86
2400A, 2450A	Emergency Relief Valves, Weight Loaded; Hinged	87-90
MISC		
	Fiberglass Relief Valves	91-92
	Steam Jacketed Relief Valves	93
TECHNICAL SECTION		
TPD	Standard Settings & Max Tank Working Pressure	94

ADDITIONAL GROTH PRODUCTS

Please see our other Groth Datasheets for additional product lines:

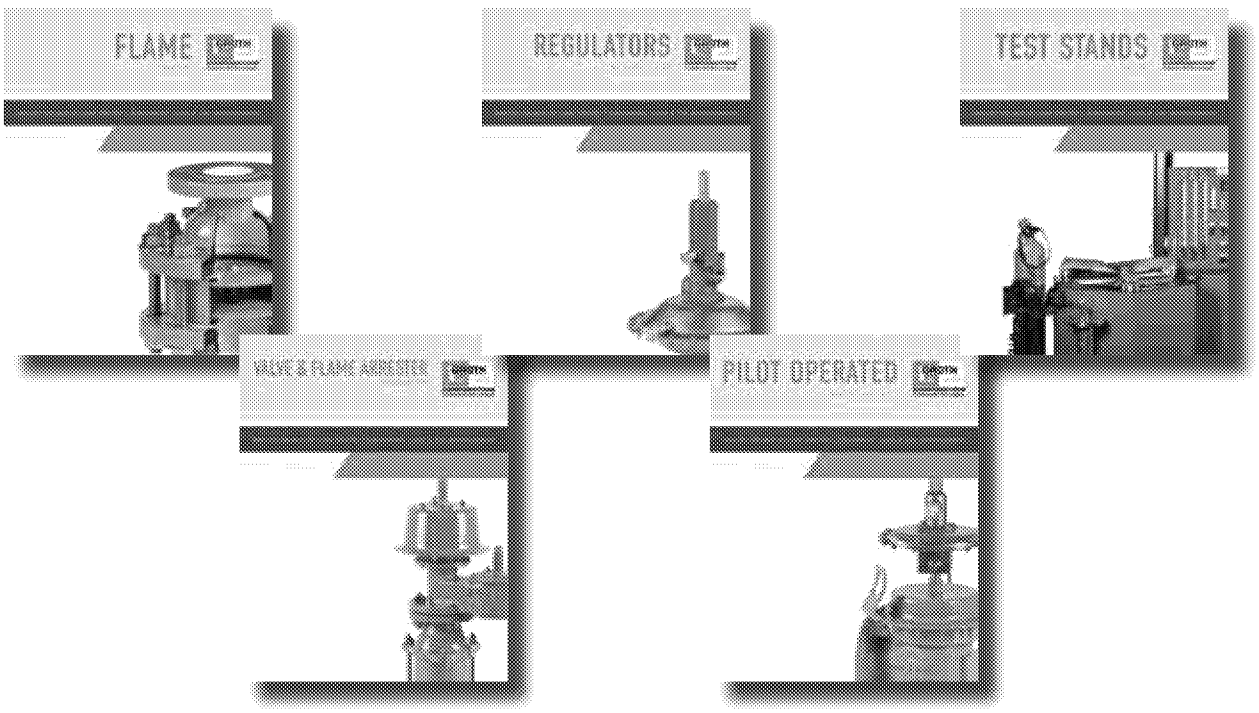

ED_002592B_00013275-00075

MODEL 1220A

- Sizes // 2" through 12"
- Pressure settings // 0.5 oz/in² to 15 psig
- Vacuum settings // 0.5 oz/in² to 12 psig
- Available in aluminum, carbon steel, stainless steel, fiberglass and other materials
- Modular construction

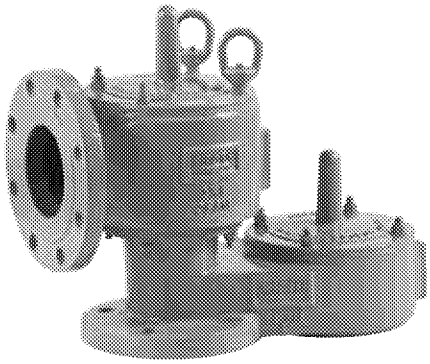

PRESSURE / VACUUM RELIEF VALVE WITH PIPE-AWAY FEATURE

Model 1220A is used for pressure and vacuum relief where vapors must be piped away. Escaping vapors are piped away through a flanged outlet connection. This helps to provide increased fire protection and safety.

SPECIAL FEATURES

Model 1220A offers Groth's special "cushioned air" seating. Superior performing fluoropolymer seating diaphragms are standard to minimize sticking caused by resinous vapors and atmospheric moisture. The Model 1220A has a self draining housing body and drip rings to protect seating surfaces from condensate and freezing. This design also avoids pressure or vacuum buildup due to binding or clogging of the valve. Buna-N, FKM, and other seating diaphragms can be provided when required. Model 1221B may be spring loaded when required for use on blanketed tanks or other type installation requiring higher settings. To insure the proper alignment of seating surfaces there is peripheral guiding and a center stabilizing stem.

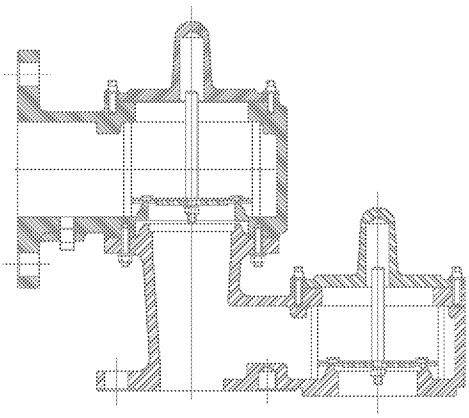

MODEL 1220A

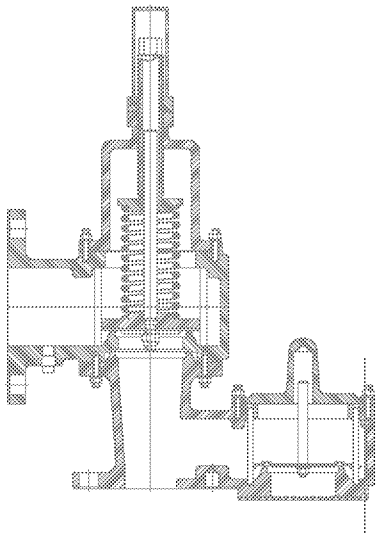

MODEL 1221B

ED_002592B_00013275-00076

SPECIFICATIONS

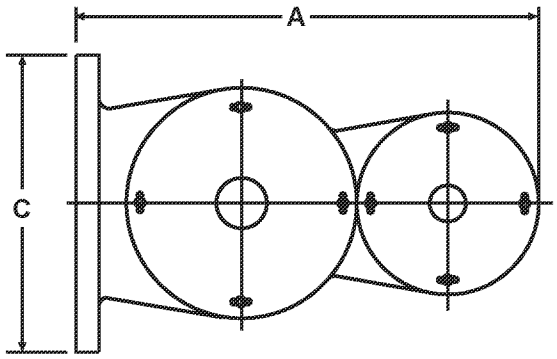

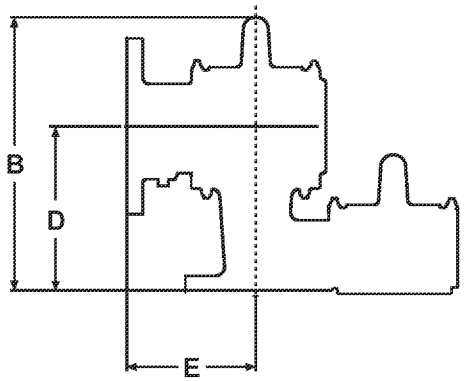

Specifications subject to change without notice. Certified dimensions available upon request.

Inlet Flg[1] (Metric)	Outlet Flg[1] (Metric)	Max. Set Pressure Weight Loaded	Max. Set Vacuum. Weight Loaded	Max. Setting Spring Loaded	Min. Setting Weight Loaded	Max. W.P.[†] for Min. Vacuum Setting	Min. Vac. Setting for Max. W.P.[†]	A Length (Metric)	B Height (Metric)	C Width (Metric)	D (Metric)	E (Metric)	Approx. Ship Wt. Lbs. (Aluminum)
2" (50 mm)	3" (76 mm)	11 oz/in² (49.2 gm/cm²)	12 oz/in² (52.7 gm/cm²)					14.25" (362 mm)	12.62" (321 mm)	7.50" (191 mm)	7" (178 mm)	5.50" (140 mm)	26 (12 kg)
3" (80 mm)	4" (102 mm)	13 oz/in² (57.1 gm/cm²)	11 oz/in² (48.3 gm/cm²)					18" (457 mm)	15.12" (384 mm)	9" (229 mm)	8.12" (206 mm)	6" (152 mm)	34 (15 kg)
4" (100 mm)	6" (152 mm)	16 oz/in² (70.3 gm/cm²)	11 oz/in² (48.3 gm/cm²)	15 psig SPRING LOADED PRESSURE (1.03 bar)	12 psig SPRING LOADED VACUUM (0.83 bar)	*0.5 oz/in² WEIGHT LOADED (0.22 mbar)	See TPD for Vacuum Settings and MAWP	19.25" (489 mm)	18.25" (464 mm)	11" (279 mm)	9.50" (241 mm)	6.50" (165 mm)	49 (22 kg)
6" (150 mm)	8" (203 mm)	16 oz/in² (70.3 gm/cm²)	16 oz/in² (70.3 gm/cm²)					26.50" (673 mm)	23.75" (603 mm)	13.50" (343 mm)	12.75" (324 mm)	8.50" (216 mm)	93 (42 kg)
8" (200 mm)	10" (254 mm)	16 oz/in² (70.3 gm/cm²)	16 oz/in² (70.3 gm/cm²)					32.50" (826 mm)	28.50" (724 mm)	16" (406 mm)	15.25" (387 mm)	10.75" (273 mm)	137 (62 kg)
10" (250 mm)	12" (305 mm)	16 oz/in² (70.3 gm/cm²)	16 oz/in² (70.3 gm/cm²)					37.75" (959 mm)	34.50" (876 mm)	19" (483 mm)	18" (457 mm)	12.50" (318 mm)	186 (84 kg)
12" (300 mm)	14" (356 mm)	16 oz/in² (70.3 gm/cm²)	16 oz/in² (70.3 gm/cm²)					42.75" (1086 mm)	39.12" (994 mm)	21" (533 mm)	20.62" (524 mm)	15" (381 mm)	260 (118 kg)

[†]W.P. = Working Pressure. [1]On spring loaded valves, change model number. [2]150# R.F. drilling compatibility F.F. on aluminum and R.F. on carbon steel and stainless steel alloys. Fiberglass dimensions on request. 16 oz/in² set with spacer. SS set weights-consult factory. *Some sizes require non-ferrous components to achieve 0.5 oz/in² setting.

HOW TO ORDER

For easy ordering, select proper model numbers

MODEL # — **SIZE** — **MATERIAL** — **OPTIONS**

1220A Weight Loaded
1221B Pressure Spring
1222B Vacuum Spring
1223B Pressure & Vacuum Springs

02" Thru 12"

Pallet Material
Seat Material
Body Material

1 = Aluminum
3 = Carbon Steel
5 = Stainless Steel
6 = Vinyl Ester Resin
7 = Furan
Z = Special

O = No Options
Z = Special Options

O = No Jacket
J = Steam Jacket
S = Spacer
H = Steam Jacket & Spacer

Diaphragm Material (Seat):
B = Buna-N
T = Fluoropolymer
V = FKM
Z = Special

NOTES
- Include model number and setting when ordering.
- For special options, consult factory.
- When ordering steam jacket, include steam pressure/temperature.
- * Stainless steel guides, stems are standard with aluminum and carbon steel bodies. Stainless steel seats standard with carbon steel bodies.

EXAMPLE 1 2 2 0 A — 0 2 — 1 1 5 — T O O

Indicates a 2" Model 1220A with Aluminum Body and Seat, Stainless Steel Pallet, Fluoropolymer Seat Diaphragm, and no other options.

Air Flow Capacity at 100% Overpressure (Double Set Pressure) 1000 Standard Cubic Feet per Hour at 60° F								
Set Pressure (P_s)		Size						
InWC	oz/in²	2" (50 mm)	3" (80 mm)	4" (100 mm)	6" (150 mm)	8" (200 mm)	10" (250 mm)	12" (300 mm)
0.87	0.50	6.87	13.3	25.2	52.7	82.6	135	175
1.00	0.58	7.39	14.3	27.1	56.6	88.8	145	188
1.73	1.00	9.71	18.8	35.6	74.3	117	190	247
2.00	1.16	10.4	20.2	38.2	79.8	125	205	265
2.60	1.50	11.9	23.0	43.5	90.8	143	233	302
3.00	1.73	12.8	24.7	46.8	97.5	153	250	324
3.46	2.00	13.7	26.6	50.2	105	164	268	348
4.00	2.31	14.7	28.6	53.9	112	177	288	374
6.00	3.47	18.0	35.0	65.9	137	215	351	456
8.00	4.62	20.7	40.4	75.8	157	248	404	525
10.0	5.78	23.1	45.1	84.6	175	276	450	584
12.0	6.93	25.2	49.4	92.4	191	301	491	638
15.0	8.66	28.1	55.2	103	211	335	546	709
20.0	11.6	32.2	63.7	118	241	383	625	811
25.0	14.4	35.8	71.2	131	267	424	692	898
30.0	17.3	39.0	77.9	143	289	460	751	975

FLOW CAPACITY CALCULATION

Flow capacity values listed above are based on full open valves at 100% overpressure.

Read the flow capacity at 100% overpressure directly from the table above. Use linear sted.

If the allowable overpressure is less than 100%, modify the flow capacity using the appropriate "C" factor from the table. If allowable overpressure is more than 100%, consult your Groth Representative.

Calculate the percentage overpressure by the following formula. Note that all pressures are gauge pressure expressed in the same units of measure.

P_f = Flowing pressure
P_s = Set pressure
$\% OP = [(P_f - P_s)/P_s] \times 100$

Calculate flow capacity at less than 100% overpressure according to the following example.

Example—To find "C" factor from table:
Read "C" factor for 75% overpressure at intersection of row **70** and column **5**
"C" factor at 75% OP = **0.87**

"C" Factor Table										
%OP	0	1	2	3	4	5	6	7	8	9
10	0.42	0.43	0.44	0.45	0.46	0.46	0.47	0.48	0.49	0.50
20	0.51	0.52	0.52	0.53	0.54	0.55	0.56	0.56	0.57	0.58
30	0.59	0.59	0.60	0.61	0.61	0.62	0.63	0.64	0.64	0.65
40	0.66	0.66	0.67	0.68	0.68	0.69	0.70	0.70	0.71	0.72
50	0.72	0.73	0.73	0.74	0.75	0.75	0.76	0.77	0.77	0.78
60	0.78	0.79	0.80	0.80	0.81	0.81	0.82	0.82	0.83	0.84
70	0.84	0.85	0.85	0.86	0.86	0.87	0.88	0.88	0.89	0.89
80	0.90	0.90	0.91	0.91	0.92	0.92	0.93	0.93	0.94	0.94
90	0.95	0.95	0.96	0.96	0.97	0.97	0.98	0.99	0.99	1.00

Example—Flow Capacity Calculation		
6" Model 1220A	1. Read flow capacity at set pressure from table	Flow = 112,000 SCFH
4 InWC set pressure [P_s]	2. Calculate overpressure	% OP = [(7 - 4)/4] x 100 = 75%
7 InWC flowing pressure [P_f]	3. Read "C" factor from table	"C" = 0.87
	4. Calculate flow capacity	***Flow = 0.87 x 112,000 = 97,440 SCFH***

ED_002592B_00013275-00078

Air Flow Capacity at 100% Overpressure (Double Set Pressure) 1000 Normal Cubic Meters per Hour at 0° C								
Set Pressure (P_s)		Size						
mmWC	mb	2" (50 mm)	3" (80 mm)	4" (100 mm)	6" (150 mm)	8" (200 mm)	10" (250 mm)	12" (300 mm)
22	2.16	0.19	0.37	0.71	1.48	2.33	3.80	4.93
50	4.90	0.29	0.56	1.07	2.23	3.50	5.72	7.42
75	7.35	0.36	0.69	1.31	2.72	4.28	6.99	9.10
100	9.80	0.41	0.80	1.51	3.14	4.93	8.05	10.4
125	12.3	0.46	0.89	1.68	3.50	5.51	8.99	11.7
150	14.7	0.50	0.98	1.84	3.82	6.02	9.80	12.7
175	17.2	0.54	1.06	1.99	4.12	6.49	10.6	13.7
200	19.6	0.58	1.13	2.12	4.39	6.92	11.3	14.7
225	22.1	0.61	1.20	2.25	4.65	7.33	12.0	15.5
250	24.5	0.65	1.26	2.36	4.89	7.71	12.6	16.3
275	27.0	0.68	1.32	2.48	5.11	8.07	13.2	17.1
300	29.4	0.70	1.38	2.58	5.33	8.42	13.7	17.8
375	36.8	0.78	1.54	2.88	5.91	9.40	15.3	19.8
500	49.0	0.90	1.78	3.30	6.75	10.7	17.5	22.7
625	61.3	1.00	1.99	3.67	7.46	11.9	19.4	25.1
750	73.5	1.09	2.18	3.99	8.07	12.9	21.0	27.3

FLOW CAPACITY CALCULATION

Flow capacity values listed above are based on full open valves at 100% overpressure.

Read the flow capacity at 100% overpressure directly from the table above. Use linear interpolation if the set pressure is not listed.

If the allowable overpressure is less than 100%, modify the flow capacity using the appropriate "C" factor from the table. If allowable overpressure is more than 100%, consult your Groth Representative.

Calculate the percentage overpressure by the following formula. Note that all pressures are gauge pressure expressed in the same units of measure.

P_f = Flowing pressure
P_s = Set pressure
$\% OP = [(P_f - P_s)/P_s] \times 100$

Calculate flow capacity at less than 100% overpressure according to the following example.

Example—To find "C" factor from table:
Read "C" factor for 75% overpressure at intersection of row **70** and column **5**
"C" factor at 75% OP = **0.87**

"C" Factor Table										
%OP	0	1	2	3	4	5	6	7	8	9
10	0.42	0.43	0.44	0.45	0.46	0.46	0.47	0.48	0.49	0.50
20	0.51	0.52	0.52	0.53	0.54	0.55	0.56	0.56	0.57	0.58
30	0.59	0.59	0.60	0.61	0.61	0.62	0.63	0.64	0.64	0.65
40	0.66	0.66	0.67	0.68	0.68	0.69	0.70	0.70	0.71	0.72
50	0.72	0.73	0.73	0.74	0.75	0.75	0.76	0.77	0.77	0.78
60	0.78	0.79	0.80	0.80	0.81	0.81	0.82	0.82	0.83	0.84
70	0.84	0.85	0.85	0.86	0.86	0.87	0.88	0.88	0.89	0.89
80	0.90	0.90	0.91	0.91	0.92	0.92	0.93	0.93	0.94	0.94
90	0.95	0.95	0.96	0.96	0.97	0.97	0.98	0.99	0.99	1.00

Example—Flow Capacity Calculation	1. Read flow capacity at set pressure from table	Flow = 3,140 NCMH
6" Model 1220A	2. Calculate overpressure	% OP = [(175 - 100)/100] x 100 = 75%
100 mmWC Set Pressure [P_s]	3. Read "C" factor from table	"C" = 0.87
175 mmWC Flowing Pressure [P_f]	4. Calculate flow capacity	***Flow = 0.87 x 3,140 = 2,732 NCMH***

Air Flow Capacity at 100% Over-Vacuum (Double Set Vacuum) 1000 Standard Cubic Feet per Hour at 60° F								
Set Vacuum (P_s)		Size						
InWC	oz/in²	2" (50 mm)	3" (80 mm)	4" (100 mm)	6" (150 mm)	8" (200 mm)	10" 250 mm)	12" (300 mm)
0.87	0.50	4.70	10.3	16.0	34.7	60.5	91.1	129
1.00	0.58	5.05	11.0	17.2	37.3	65.0	97.9	138
1.73	1.00	6.63	14.5	22.6	49.0	85.3	129	182
2.00	1.16	7.12	15.6	24.2	52.6	91.6	138	195
2.60	1.50	8.10	17.7	27.6	59.8	104	157	222
3.00	1.73	8.70	19.0	29.6	64.2	112	169	238
3.46	2.00	9.33	20.4	31.8	68.9	120	181	256
4.00	2.31	10.0	21.9	34.1	74.0	129	194	274
6.00	3.47	12.2	26.7	41.5	90.1	157	237	334
8.00	4.62	14.0	30.6	47.7	103	180	272	384
10.0	5.78	15.6	34.0	53.0	115	200	302	427
12.0	6.93	17.0	37.1	57.8	125	218	329	465
15.0	8.66	18.8	41.1	64.0	139	242	365	516
20.0	11.6	21.4	46.8	72.9	158	276	415	587
25.0	14.4	23.6	51.5	80.3	174	304	457	646
30.0	17.3	25.4	55.6	86.6	188	327	493	697

FLOW CAPACITY CALCULATION

Flow capacity values listed above are based on full open valves at 100% over-vacuum.

Read the flow capacity at 100% over-vacuum directly from the table above. Use linear interpolation if the set vacuum is not listed.

If the allowable over-vacuum is less than 100%, modify the flow capacity using the appropriate "C" factor from the table. If allowable over-vacuum is more than 100%, consult your Groth Representative.

Calculate the percentage over-vacuum by the following formula. Note that all pressures are gauge pressure expressed in the same units of measure.

P_f = Flowing pressure
P_s = Set pressure
$\% OV = [(P_f - P_s)/P_s] \times 100$

Calculate flow capacity at less than 100% over-vacuum according to the following example.

Example—To find "C" factor from table:
Read "C" factor for 75% over-vacuum at intersection of row **70** and column **5**
"C" factor at 75% OV = **0.87**

"C" Factor Table										
%OV	0	1	2	3	4	5	6	7	8	9
10	0.42	0.43	0.44	0.45	0.46	0.46	0.47	0.48	0.49	0.50
20	0.51	0.52	0.52	0.53	0.54	0.55	0.56	0.56	0.57	0.58
30	0.59	0.59	0.60	0.61	0.61	0.62	0.63	0.64	0.64	0.65
40	0.66	0.66	0.67	0.68	0.68	0.69	0.70	0.70	0.71	0.72
50	0.72	0.73	0.73	0.74	0.75	0.75	0.76	0.77	0.77	0.78
60	0.78	0.79	0.80	0.80	0.81	0.81	0.82	0.82	0.83	0.84
70	0.84	0.85	0.85	0.86	0.86	0.87	0.88	0.88	0.89	0.89
80	0.90	0.90	0.91	0.91	0.92	0.92	0.93	0.93	0.94	0.94
90	0.95	0.95	0.96	0.96	0.97	0.97	0.98	0.99	0.99	1.00

Example—Flow Capacity Calculation	1. Read flow capacity at set vacuum from table	Flow = 74,000 SCFH
6" Model 1220A	2. Calculate over-vacuum	% OV = [(7 - 4)/4] x 100 = 75%
4 InWC Set Vacuum [P_s]	3. Read "C" factor from table	"C" = 0.87
7 InWC Flowing Vacuum [P_f]	4. Calculate flow capacity	***Flow = 0.87 x 74,000 = 64,380 SCFH***

Air Flow Capacity at 100% Over-Vacuum (Double Set Vacuum) 1000 Normal Cubic Meters per Hour at 0° C								
Set Vacuum (P_s)		Size						
mmWC	mb	2" (50 mm)	3" (80 mm)	4" (100 mm)	6" (150 mm)	8" (200 mm)	10" (250 mm)	12" (300 mm)
22	2.16	0.13	0.29	0.45	0.98	1.71	2.58	3.65
50	4.90	0.20	0.44	0.68	1.48	2.58	3.88	5.48
75	7.35	0.24	0.53	0.83	1.81	3.15	4.74	6.70
100	9.80	0.28	0.62	0.96	2.08	3.62	5.46	7.72
125	12.3	0.31	0.69	1.07	2.32	4.04	6.09	8.60
150	14.7	0.34	0.75	1.17	2.53	4.41	6.65	9.40
175	17.2	0.37	0.81	1.26	2.73	4.75	7.16	10.1
200	19.6	0.39	0.86	1.34	2.91	5.07	7.64	10.8
225	22.1	0.42	0.91	1.42	3.08	5.36	8.08	11.4
250	24.5	0.44	0.96	1.49	3.23	5.64	8.49	12.0
275	27.0	0.46	1.00	1.56	3.38	5.90	8.88	12.6
300	29.4	0.48	1.04	1.62	3.52	6.14	9.25	13.1
375	36.8	0.53	1.16	1.80	3.91	6.81	10.3	14.5
500	49.0	0.60	1.32	2.05	4.45	7.75	11.7	16.5
625	61.3	0.66	1.45	2.26	4.90	8.54	12.9	18.2
750	73.5	0.72	1.57	2.44	5.29	9.22	13.9	19.6

FLOW CAPACITY CALCULATION

Flow capacity values listed above are based on full open valves at 100% over-vacuum.

Read the flow capacity at 100% over-vacuum directly from the table above. Use linear interpolation if the set vacuum is not listed.

If the allowable over-vacuum is less than 100%, modify the flow capacity using the appropriate "C" factor from the table. If allowable over-vacuum is more than 100%, consult your Groth Representative.

Calculate the percentage over-vacuum by the following formula. Note that all pressures are gauge pressure expressed in the same units of measure.

P_f = Flowing pressure
P_s = Set pressure
$\% OV = [(P_f - P_s)/P_s] \times 100$

Calculate flow capacity at less than 100% over-vacuum according to the following example.

Example—To find "C" factor from table:
Read "C" factor for 75% over-vacuum at intersection of row **70** and column **5**
"C" factor at 75% OV = **0.87**

"C" Factor Table										
%OV	0	1	2	3	4	5	6	7	8	9
10	0.42	0.43	0.44	0.45	0.46	0.46	0.47	0.48	0.49	0.50
20	0.51	0.52	0.52	0.53	0.54	0.55	0.56	0.56	0.57	0.58
30	0.59	0.59	0.60	0.61	0.61	0.62	0.63	0.64	0.64	0.65
40	0.66	0.66	0.67	0.68	0.68	0.69	0.70	0.70	0.71	0.72
50	0.72	0.73	0.73	0.74	0.75	0.75	0.76	0.77	0.77	0.78
60	0.78	0.79	0.80	0.80	0.81	0.81	0.82	0.82	0.83	0.84
70	0.84	0.85	0.85	0.86	0.86	0.87	0.88	0.88	0.89	0.89
80	0.90	0.90	0.91	0.91	0.92	0.92	0.93	0.93	0.94	0.94
90	0.95	0.95	0.96	0.96	0.97	0.97	0.98	0.99	0.99	1.00

Example—Flow Capacity Calculation
6" Model 1220A
100 mmWC Set Vacuum [P_s]
175 mmWC Flowing Vacuum [P_f]

1. Read flow capacity at set vacuum from table — Flow = 2,080 NCMH
2. Calculate over-vacuum — % OV = [(175 - 100)/100] x 100 = 75%
3. Read "C" factor from table — "C" = 0.87
4. Calculate flow capacity — ***Flow = 0.87 x 2,080 = 1,810 NCMH***

Attachment 2

ACC Proposal

August 27, 2018

Global Portland

Passive Tank Vent Mist Separation System

System Design Basis and Operation

Model ACC-PVS-350-SS

Design Basis
- heated asphalt and 6-Oil
- nominal displacement at 3500 bbl/h
- mesh pad operating differential pressure to be <0.2" WG at 3500 bbl/h pumping rate
- maximum removal efficiency of visible fraction
- corrosion resistance to low pH condensate

Description of Operation
Heated asphalt / 6-oil vapors are displaced by normal breathing and during pumping into the tank. The vapors are transported through a 10" diameter duct to the mist separator located at ground level immediately adjacent to the tank.

The vapors entire the top of the PVS mist separator through the inlet. They travel downward where they impact on the liquid stored within the PVS resulting in some coalescing and absorption into the liquid surface. A 180 degree turn results in some additional removal by inertial means.

The vapors then travel upward where they are passed through a stainless steel mesh pad. The mesh pad operates to remove liquid aerosols by coalescing them to larger droplets primarily by inertial impaction and interception mechanisms. Collected liquid drains down into the bottom of the vessel.

Maintenance Requirements
A differential pressure gauge is located across the mist eliminator mesh pad. Its maximum differential will be recorded during product receiving and will be an indication of when the mesh pad requires cleaning.

Collected condensate will be drained at regular intervals as determined by plant operations.

Applied Contaminant Control Ltd.
10908-123 Street NW, Edmonton, Alberta, Canada T5M 0C9
p. 780-413-6934 f. 780-413-6935 www.acc-ltd.ca

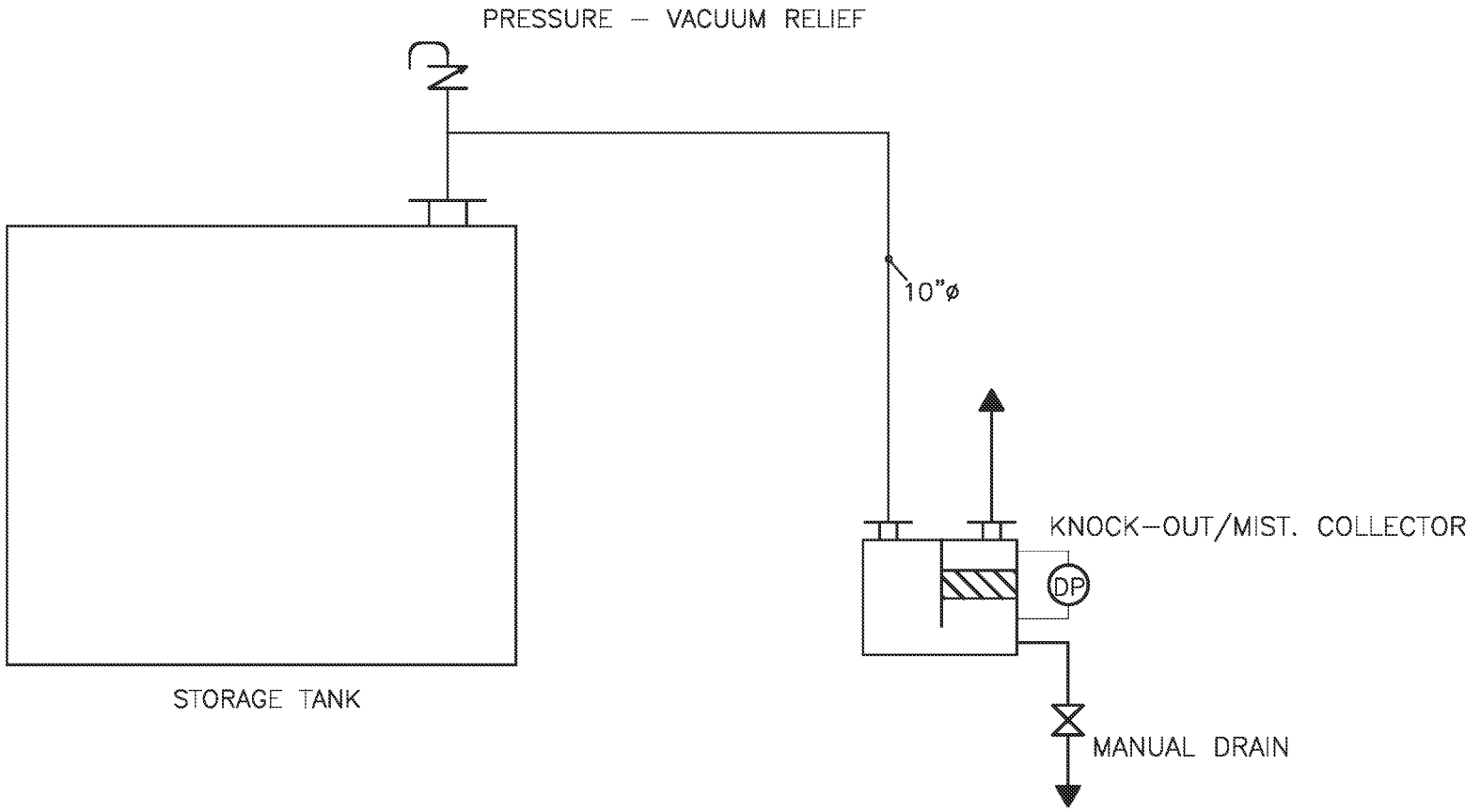

NOTES

REV.	REVISION	DATE	BY
0	ISSUED FOR REVIEW	08/22/18	JPX

PROPRIETARY INFORMATION

THIS DOCUMENT CONTAINS APPLIED CONTAMINANT CONTROL PROPRIETARY AND CONFIDENTIAL INFORMATION. IT IS LOANED FOR LIMITED PURPOSES ONLY AND REMAINS THE PROPERTY OF APPLIED CONTAMINANT CONTROL. IT MAY NOT BE REPRODUCED IN WHOLE OR PART OR DISCLOSED TO THIRD PARTIES WITHOUT THE PRIOR WRITTEN CONSENT OF APPLIED CONTAMINANT CONTROL. THE DOCUMENT IS TO BE RETURNED TO APPLIED CONTAMINANT CONTROL UPON REQUEST AND IN ALL EVENTS UPON COMPLETION OF THE USE FOR WHICH IT WAS LOANED.

CLIENT: GLOBAL

PROJECT: PORTLAND TANK VENT MIST COLLECTOR

SCALE: NTS

DRN BY: JPX

DATE: AUG. 18'

TITLE: PVS – PROPOSAL

APPLIED CONTAMINANT CONTROL LTD.
10908–123 STREET
EDMONTON, ALBERTA
CANADA T5M 0C9
(780) 413–8834

DWG # PVS – PROPOSAL

ED_002592B_00013275-00084

1/4" 304SS FLANGES

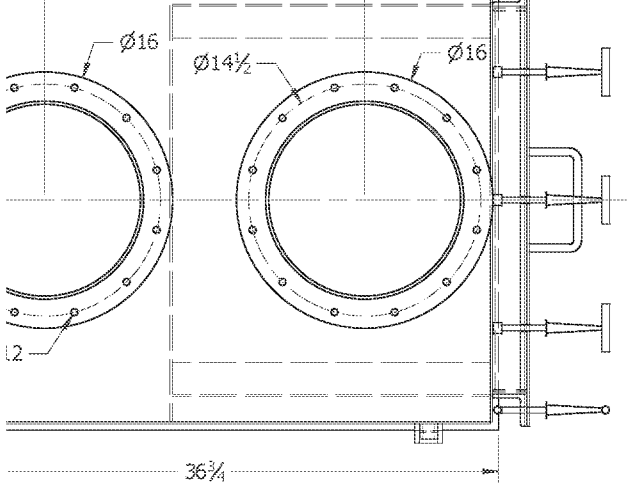

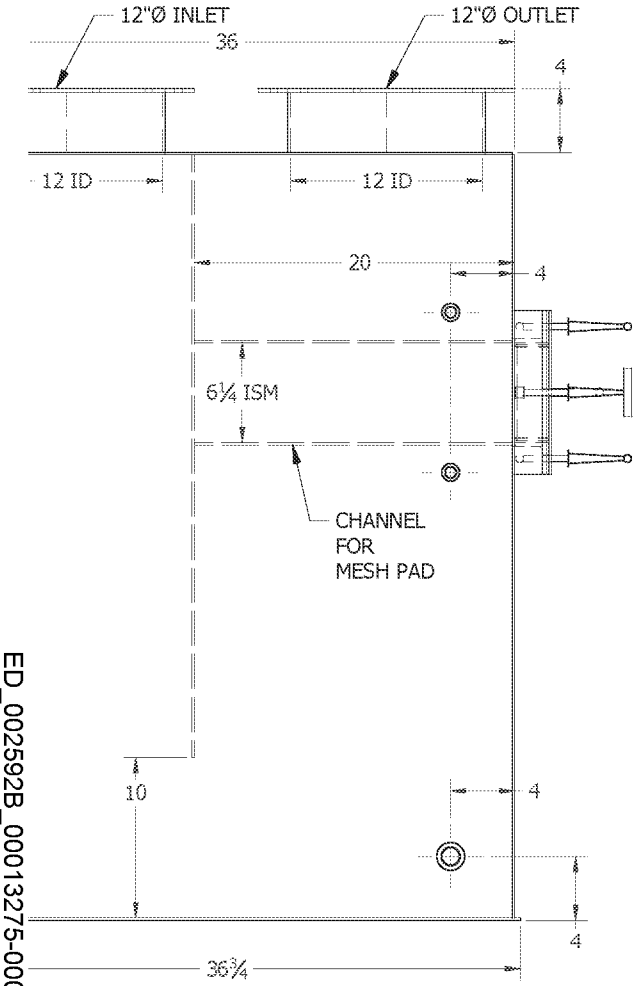

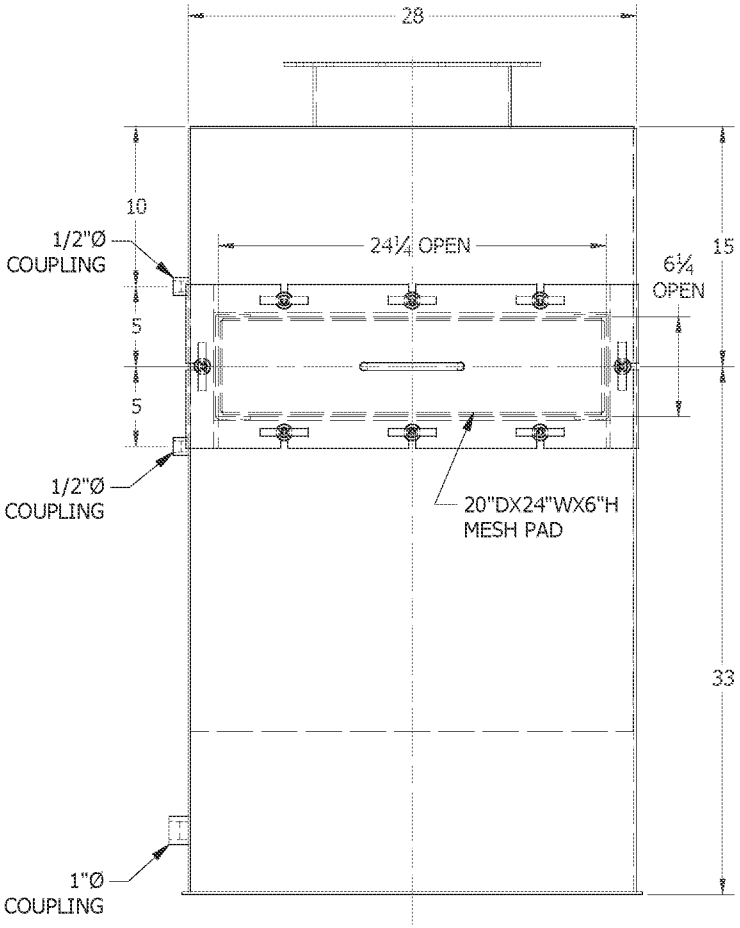

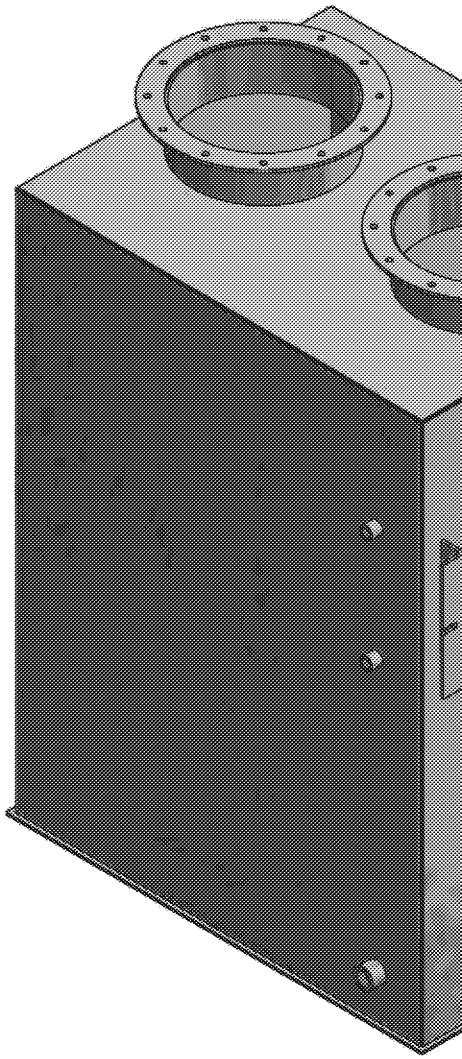

ED_002592B_00013275-00085

PROPRIETARY INFORMATION
THIS DOCUMENT CONTAINS APPLIED CONTAMINANT CONTROL PROPRIETARY AND CONFIDENTIAL INFORMATION IT IS LOANED FOR LIMITED PURPOSES ONLY AND

CLIENT: GLOBAL

PROJECT: VENT SYSTEM

Attachment 3

Mist Eliminator Information

From AMACS

The Engineered Mist Eliminator

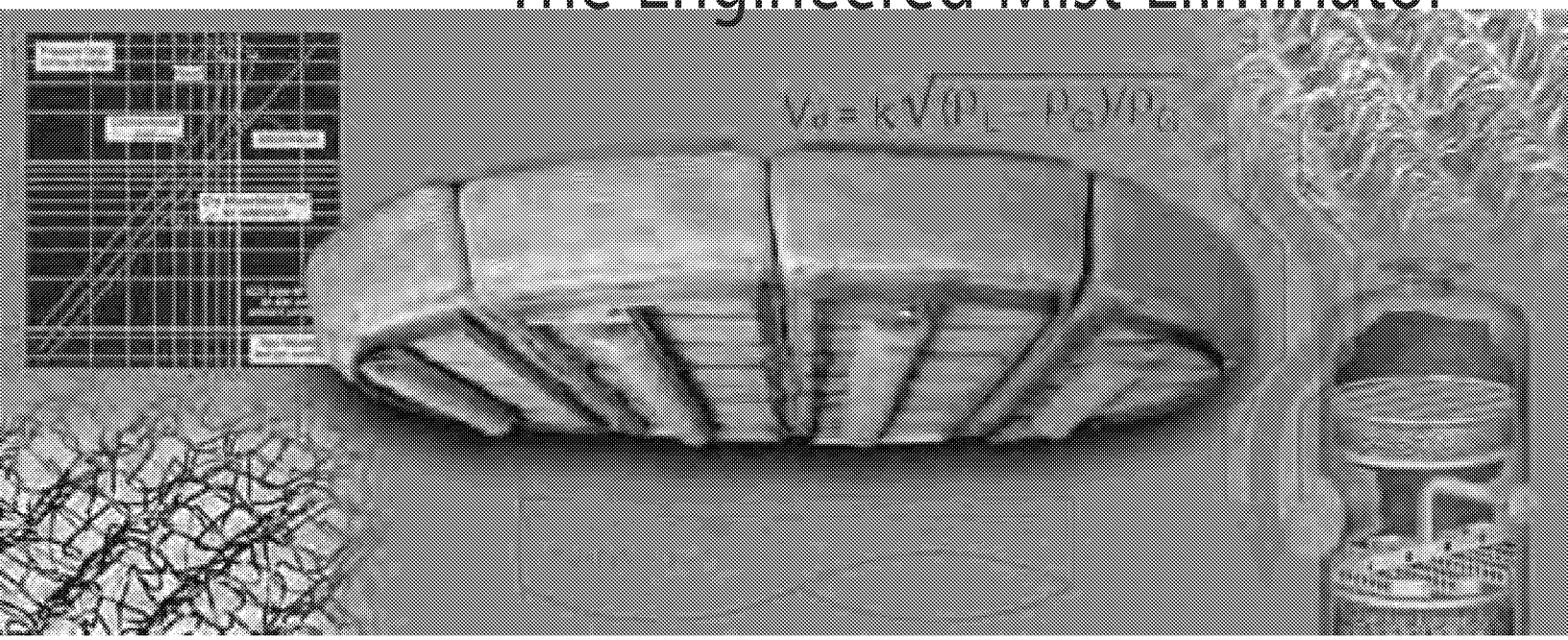

Reduce Costs

Increase Capacity

Improve Performance

Debottleneck Equipment

Simplify Installation

Customize Pads

AMACS
PROCESS TOWER INTERNALS

800-231-0077
14211 Industry Street • Houston, TX 77053 • TEL: 713-434-0934 • FAX: 713-433-6201
Email:amacs@amacs.com • Visit our website www.amacs.com

Table of Contents

Introduction 1

Droplet Formation and Size Distributions 1

Mechanisms of Droplet Removal 2

Types of Mist Eliminator Mesh & Materials ...4

Design Equations 6

Predicting Pressure Drop 7

Inlet Diffusers 7

Vessel Configuration 8

Advanced Mist Eliminator Designs 10

Mesh-Vane Assemblies 11

Use of Geometry 11

MultiPocket® Vanes 11

Pockets Improve Efficiency 12

MaxCap® Mist Eliminator 14

Case Studies & Examples 15

Plate-Pak™ and AccuFlow™ are trademarks of AMACS Process Tower Internals. MisterMesh® and MultiPocket® are registered trademarks of AMACS Process Tower Internals. The information contained in this bulletin is believed to be accurate and reliable but is not to be construed as implying any warranty or guarantee of performance.

The Engineered Mist Eliminator

Mist elimination, or the removal of entrained liquid droplets from a vapor stream, is one of the most commonly encountered processes regardless of unit operation. Unfortunately, mist eliminators are often considered commodity items and are specified without attention to available technologies and design approaches. The engineered mist eliminator may reduce liquid carryover by a factor of one hundred or more relative to a standard unit, drop head losses by 50% or more, or increase capacity by factors of three or four. This manual summarizes input practical approaches to reducing absorbent losses, product contamination and entrainment carry over, extending equipment life and maintenance cycles - using proven and cost effective technologies and techniques.

Droplet Formation and Size Distributions

Entrained liquid does not consist of same-sized droplets, but as a broad range of droplet sizes that may be characterized with a Normal or Bell Distribution centered about some mean or average. The average droplet size depends very much on the mechanism by which they are generated. Sizing equations are expressed in terms of the probability of removing a droplet of a given diameter, and mist eliminator performance is the integration or cumulative sum of individual removal efficiencies. It is therefore critical to know the approximate droplet size distribution in order to properly design a mist elimination system. Figure 1 shows some typical size distribution curves from different sources.

FIGURE 1

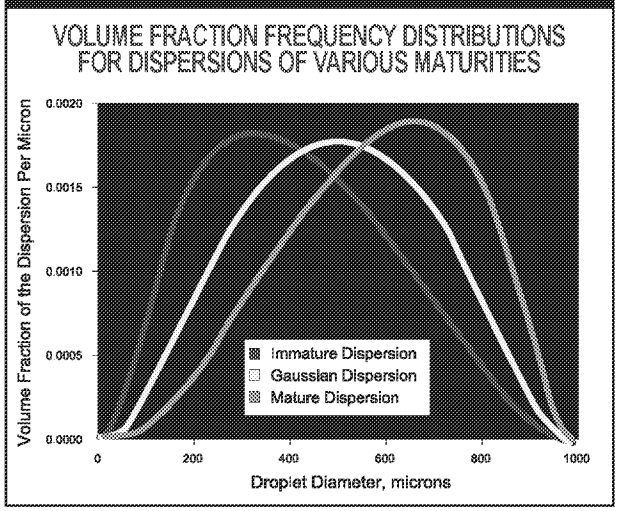

In practice, designers or engineers do not quantify or measure droplet size distributions, rather they are assumed based on empirical data or experience. Fortunately, an experienced engineer can assume an approximate distribution based on the means or mechanism by which the droplets are generated. Typical examples from common mist sources are given to illustrate these concepts.

Fine droplet distributions, often called *fogs* (<3 µm diameter particles with an average typically in the submicron range), occur in high speed metal stamping in which cycles of extreme frictional heating and shock condensation of lubricating oils form droplets in the submicron range, so-called "blue smoke". This smoke is removed to comply with health and environmental regulations.

Fog is also produced when gas phase reactions form a liquid product as in the case of vapor phase SO_3 and water yielding H_2SO_4. Downstream

TEL: 800-231-0077 • FAX: 713-433-6201 • WEB: www.amacs.com • EMAIL: amacs@amacs.com

ED_002592B_00013275-00088

equipment corrodes rapidly without the removal of this liquid. Similar concerns are found in ammonia prill towers, many chlorine applications, as well as phosphoric and nitric acid plants.

A *mist* consists of droplets in the range of 3µm and greater, though distributions with average diameters of 20 µm and greater are termed *Sprays*. Mist coming off the top of packing or trays, or generated by surface evaporation, are typically in the broad range of 5-800 µm. In towers used in glycol dehydration and amine sweetening in which mists are a major source of costly solvent losses, removal of droplets down to 5 µm is recommended.

Hydraulic spray nozzles generate particles with diameters greater than 50 µm and pneumatic nozzles generate particles with diameters greater than 10 µm, with upper limits reaching 1000 µm.

The first step in engineering a mist eliminator is to determine the mechanism by which the droplets are generated and assume an average droplet size. Figure 2 summarizes typical particle size distributions caused by various mechanisms:

FIGURE 2

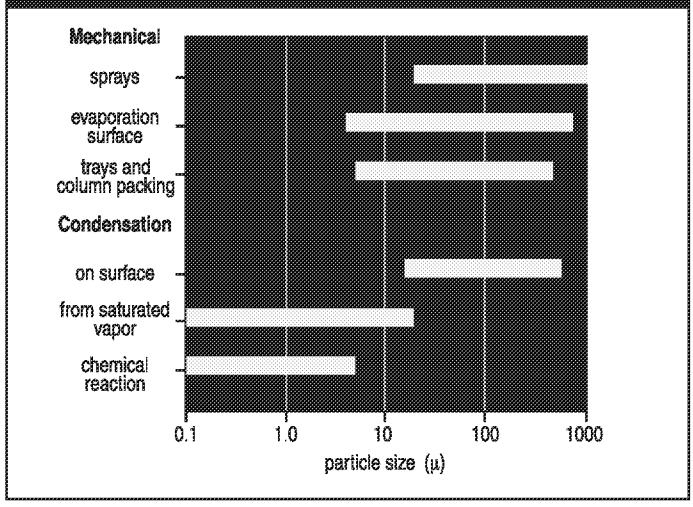

This manual contains basic design concepts used by engineers to remove droplets greater than 3 µm in diameter, so called mists and sprays.

Mechanisms of Droplet Removal

Droplets are removed from a vapor stream through a series of three stages: collision & adherence to a target, coalescence into larger droplets, and drainage from the impingement element. Knowing the size distributions as explained above is important because empirical evidence shows that the target size - important in the first step of removal - must be in the order of magnitude as the particles to be removed. These steps are shown schematically in Figure 3 for mist elimination using a wire mesh mist eliminator.

FIGURE 3

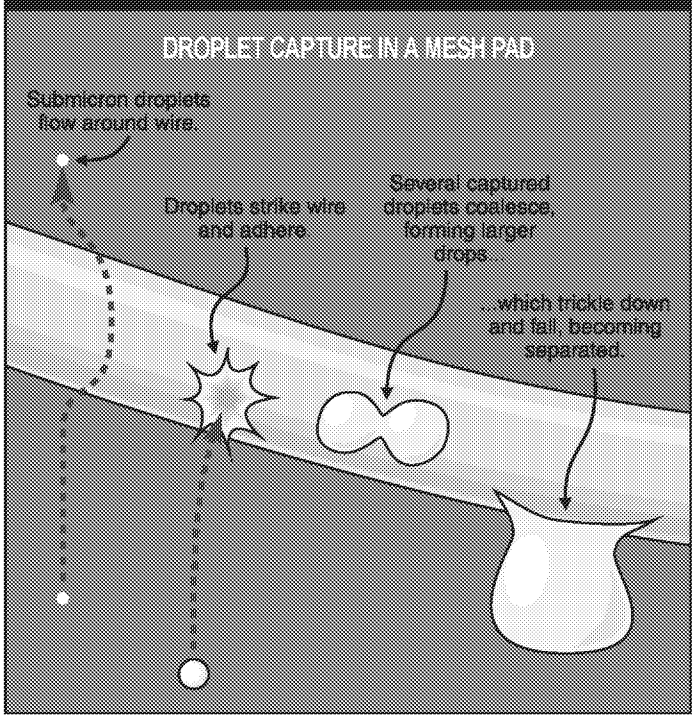

For fogs in which the bulk of the droplets are characterized with submicron diameters, the energy to bring about the collision with the target is derived from Brownian Diffusion, the random motion of fine liquid particles as they are pushed about by molecular action as shown in Figure 4a. Fog elimination with so-called fiberbed technology is beyond the scope of this manual.

FIGURE 4

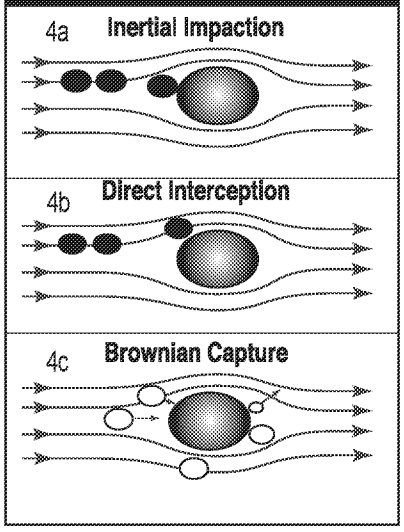

For particles in the mist region between 3-20 µm, knitted wire mesh is the most common type of mist eliminator used and interception is the primary mechanism.

TEL: 800-231-0077 • FAX: 713-433-6201 • WEB: www.amacs.com • EMAIL: amacs@amacs.com

ED_002592B_00013275-00089

Consider a droplet approaching a mesh filament of much larger diameter as shown in Figure 4b. The more dense the droplet relative to the gas, the larger the droplet relative to the filament, and the higher the gas velocity, the more likely it is that the droplet will strike the filament. If the velocity is too low, or the droplet too small or too light compared to the gas, the droplet will simply flow around the filament with the gas. If the velocity is too high, liquid clinging to the filaments will be re-entrained, mostly as larger droplets, and carried away by the gas. Re-entrainment is also promoted by low relative liquid density (making it easier for the gas to pick up a droplet) and low liquid surface tension (as less energy is required to break up a film or droplet). The engineered wire mesh mist eliminator may remove 99.9% of particles 2 µm and greater diameter. Figure 5 shows a typical removal efficiency vs droplet size distribution for a wire mesh mist eliminator.

FIGURE 5

SEPARATION EFFICIENCY FOR VARIOUS DROPLET SIZES IN A TYPICAL WIRE MESH MIST ELIMINATOR

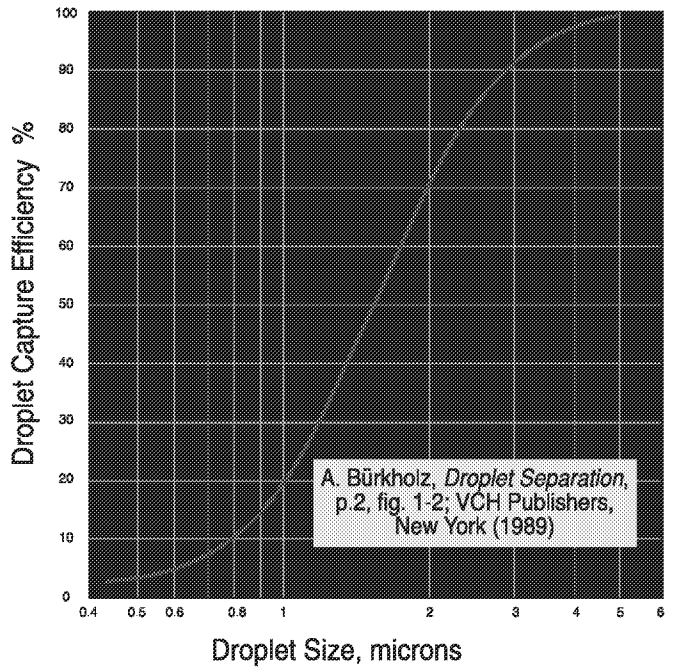

Droplets ~20 µm and greater are primarily collected by means of Inertial Impaction whereby the target is directly in the path of the streamline, as shown in Figure 4c. Figure 6 depicts a profile of the ACS Plate-Pak™ vane. The entrained droplets, due to their momentum, tend to move in straight lines. By studying this figure, it is easy to understand why in the design equations to follow the removal efficiency is directly proportional to the difference in densities of the liquid droplet and carrying gas. With each change in direction of the gas, some droplets collide with the surface and adhere, eventually coalescing into larger droplets which then drain by gravity. Properly designed vane mist eliminators can remove 99% of particles as low as 10 µm in diameter, especially at lower pressures.

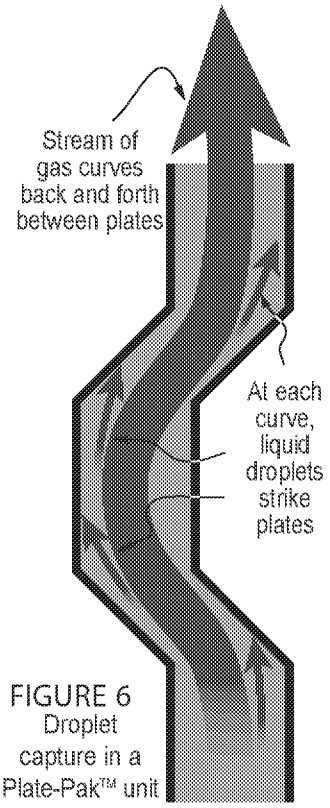

FIGURE 6
Droplet capture in a Plate-Pak™ unit

Figure 7 illustrates typical wire mesh and Plate-Pak™ vane mist eliminators, and Figure 8 shows some typical performance curves for both mesh and vane mist eliminators.

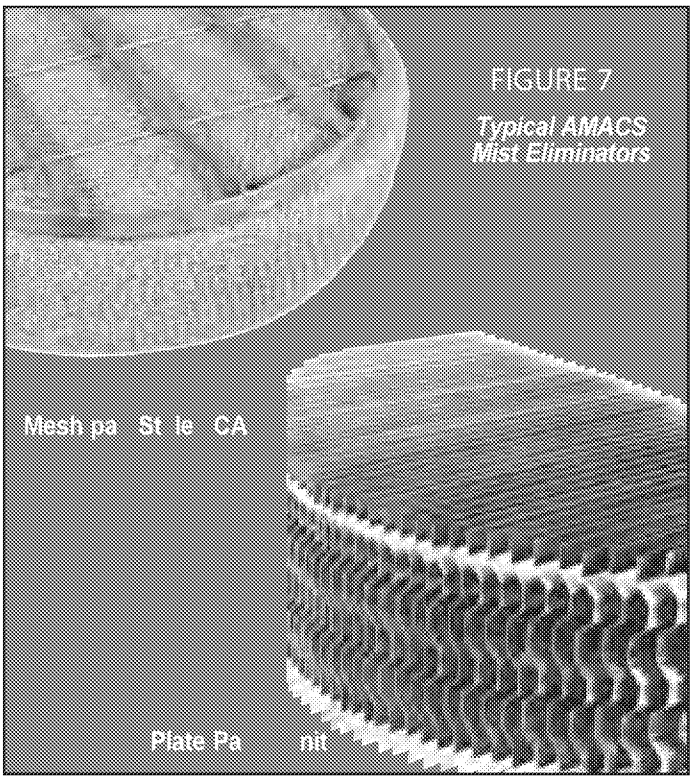

FIGURE 7
Typical AMACS Mist Eliminators

TEL: 800-231-0077 • FAX: 713-433-6201 • WEB: www.amacs.com • EMAIL: amacs@amacs.com

ED_002592B_00013275-00090

FIGURE 8

THEORETICAL EFFICIENCY VS VELOCITY FOR VARIOUS DROPLET SIZES WATER IN AIR AT AM IENT CONDITIONS FOR TYPICAL MESH PADS AND PLATE-PA ™ UNITS WITH LI HT LI UID LOAD

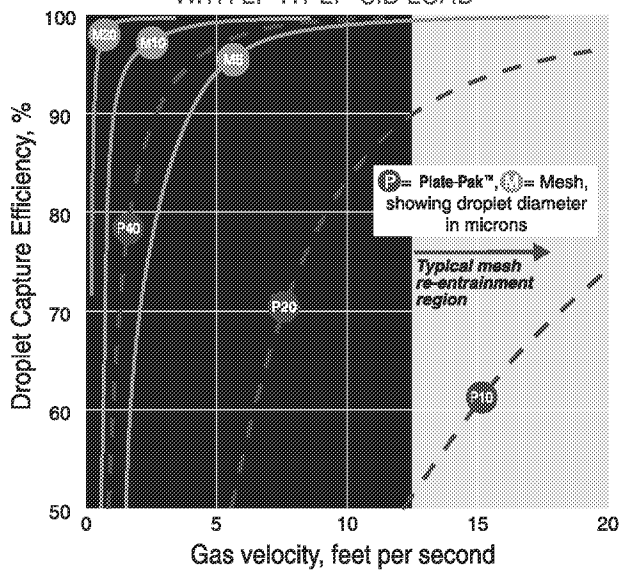

It is worthwhile to discuss Fig. 8 and mist eliminator performance. The dotted curves correspond to different styles of vanes and the solid to wire mesh styles. ote first of all that vanes can be engineered to operate at higher gas velocities and flow rates relative to mesh, but that mesh mist eliminators can approach 100 removal efficiency at smaller droplet sizes. This agrees with the discussions above on Interception and Inertial Impaction removal mechanisms. ote the drastic efficiency drop off at low velocities, in which droplets drift around the filaments or vane blades without striking them. This phenomenon defines the lower operating range of a mist eliminator. The other extreme is when the velocity is too high. In this case, the droplets are captured but the velocity of the gas provides sufficient energy to tear-off and re-entrain droplets. It is in the context of re-entrainment that the design equations which follow show that the removal efficiency is directly proportional to the surface tension of the liquid. As the surface tension increases, so it requires greater kinetic energy i.e. gas velocity to break the bond between droplet and target, and the droplets collect and coalesce until drainage by gravity. e-entrainment defines the upper capacity limit of a mist eliminator.

perating range is also affected by the liquid loading proportion of liquid of the gas. If too great, the mist eliminator becomes choked with liquid, a condition called flooding. Flooding is often noticed by high pressure drops or massive carryover of liquids. Typical wire mesh mist eliminators accommodate liquid loads up to about one S M per square foot and vanes twice as much.

The key operating ranges and suitability of mesh and vane mist eliminators are summarized in Figure . It emphasizes that vanes are more effective at higher velocities and greater droplet sizes while mesh is more suitable for removing smaller particles at lower velocities. ravity settling alone is sufficient for very large particles, and co-knit mesh pads, discussed below, for particles in the range of sizes from 2-8 µm. Finally, fiberbed technology is used for submicron fogs.

FIGURE 9

APPRO IMATE OPERATIN RAN ES OF MIST ELIMINATORS

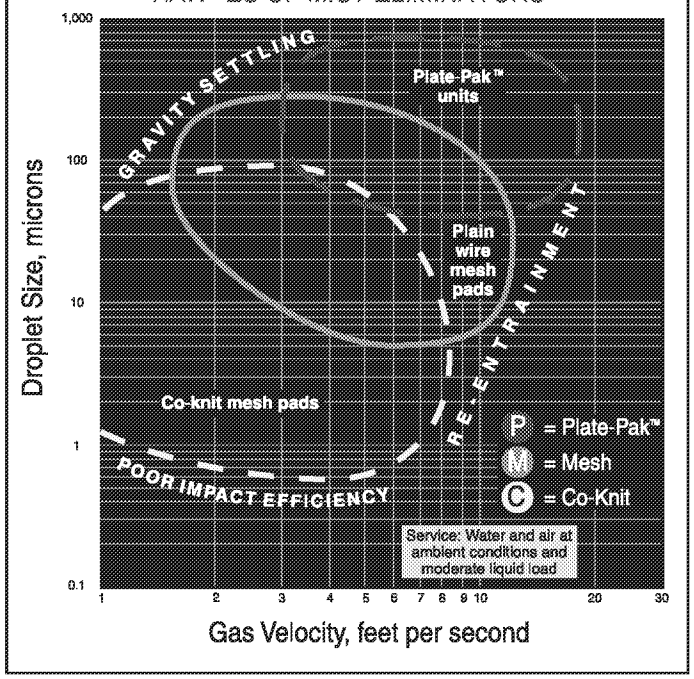

Types Mist Eli inat Mesh Styles Mate ials

Most designers believe that all wire mesh mist eliminators behave basically the same in terms of capacity and removal efficiency. It is true that for meshes of same filament diameter, the denser mesh offers superior removal efficiency. For meshes with differing filament diameters, a lighter less dense mesh may offer considerably better removal efficiency. The key is that the working part of the mesh is the target density, not

TEL: 800-231-0077 • FAX: 713-433-6201 • WEB: www.amacs.com • EMAIL: amacs@amacs.com

ED_002592B_00013275-00091

the mass density. For e ample, the most common 9-lb density mesh, AMACS style 4CA, e hibits ~85 sq-ft cu-ft of surface area. Compare this to the co-knit of a metal with fiberglass (AMACS style 6B) which also e hibits 9-lb mass density but e hibits a specific surface area approaching ,700 sq-ft cu-ft, some 40 greater targets per unit volume.

Table 1 shows a few of the more common mesh styles available, together with mesh density and void fraction, and most importantly, the diameter and specific surface area (i.e. the target density) of filaments used.

TABLE 1 • Wire and Plastic Mesh Styles

Mesh Style	Density lbs/ft³	Diameter D, inches	Surface, S, ft²/ft³	Percent Voids, ε
Metal mesh				
7CA	5.0	0.011	45	99.0
5CA	7.0	0.011	65	98.6
4CA	9.0	0.011	85	98.2
4BA	12.0	0.011	115	97.6
3BF	7.2	0.006	120	98.6
3BA	12.0	0.006	200	97.6
Plastic mesh				
8P	4.0	0.011	130	92.0
8K	4.0	0.011	160	96.3
8T	4.0	0.011	130	97.0

Mesh Style	Density lbs/ft³	Diameter D, inches	Surface, S, ft²/ft³	Percent Voids, ε
Metal mesh				
8D	9	0.0008	615	99.0
8TMW11	12	0.0008	1170	99.0
6BE	9	0.00036	3725	99.0
Plastic mesh				
8PP	3	0.001	480	99.0
8TT	5	0.0008	1240	99.0

t is t am t tar ts p r it m i i s r m a i i y t t sity m s (the greater the number of targets the greater the probability of a successful collision).

In a co-knit such as a metal alloy and fiberglass, the alloy provides a skeleton for structural support and prevents the high specific surface media from collapsing on itself.

As far back as the 1950 s researchers (C. eRoy Carpenter et al) determined that specific surface area and target or filament diameter play a great role in removal efficiency. Target or filament diameter must be on the order of magnitude as the smallest droplets to be removed. Due to limitations in metal wire ductility and corrosion considerations, co-knits provide finer targets and hence remove finer droplets. Figures 10 and 11 are enlarged images of crimped wire mesh and a co-knit with fiberglass respectively.

FIGURE 10

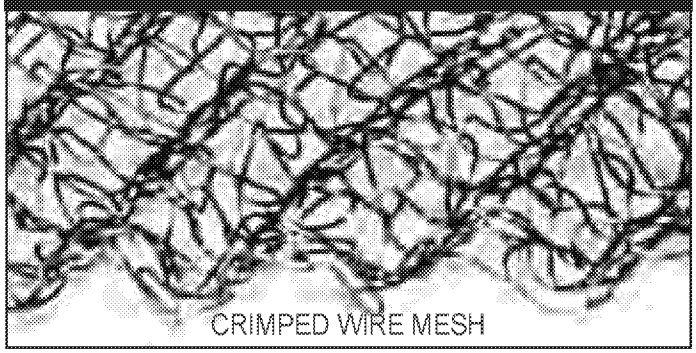

CRIMPED WIRE MESH

FIGURE 11

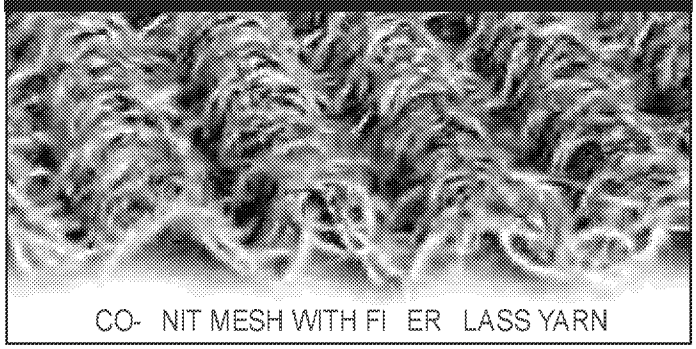

CO- NIT MESH WITH FI ER LASS YARN

In summary, it is important to report mesh styles in terms of the specific surface area - a measure of the target density, and filament diameter -a measure of the smallest droplet size that can be removed with high efficiency. The mass density is only relevant insofar that a metal mesh of density 12-lb e hibits a greater specific surface area than one of density 7-lb provided the wire diameter remains constant.

Selecting the material of mesh style(s) is also important. Corrosion rates as low as 0.005 year is not serious in vessel walls but will quickly destroy 0.006 or 0.011 wire mesh. Table 2 gives preliminary guidelines, but AMACS draws wire and knits mesh with any ductile metal for special applications.

When applying non-metal materials operating temperature limits must be considered.

TEL: 800-231-0077 • FAX: 713-433-6201 • WEB: www.amacs.com • EMAIL: amacs@amacs.com

ED_002592B_00013275-00092

TABLE 2
Mesh Corrosion & Temp. Considerations

Material	Spec. Grav.	Max. Op. Temp., °F	Typical Surface
304 SS	1.00	---	Petroleum, aqueous
304L	1.00	---	Petroleum, aqueous
316L	1.00	---	Sulfuric acid
410 SS	1.00	---	Mild chemicals
Monel®	1.12	---	Corrosive chemicals
Nickel	1.13	---	Caustic evaporators
Alloy 20	1.00	---	Sulfuric acid
Glass	2.52	---	Mild aqueous chemicals
Hastelloy®	1.14	---	Hydrochloric & other acids
Dacron®	1.38	350	Co-knit applications
Kynar®	1.75	300	Acid, alkali
Polypropylene	0.90	160	Water, acid, alkali
Teflon®	2.15	400	Hot sulfuric acid up to 300°F
Tefzel®	1.70	380	Acid, alkali

Desi n E uati ns

To determine mist eliminator cross-sectional area (and hence vessel size) and predict performance in terms of removal efficiency, the optimum design gas velocity is determined first. The Souders-Brown equation is used to determine this velocity based on the physical properties of the liquid droplets and carrying vapor

$$V_d \quad k \rho L - \rho \quad \rho$$

he e V_d desi n as el ity t se
k Capa ity Fa t t se
ρL Li uid Density l s t
ρ Vap Density l s t

The capacity factor is determined through e perience and for each application, and is influenced by type and style of mesh or vane targets used, the geometry of the targets (vertical or horizontal relative to the vapor flow), as well as by properties such as operating pressure, fluid viscosities, and liquid surface tension.

The design velocity $_d$ for a given application is the value that produces the best performance in terms of capturing droplets and avoiding re-entrainment. Referring to Figure 8, this ideal velocity for a given class of mist eliminators would be somewhere toward the upper end of the range about 10 fps for plain wire mesh pads, about 8.5 fps for co-knits, and 14 fps for Plate-Pak™ elements. As discussed, effectiveness drops off at lower velocities as the droplets have sufficiently low momentum to negotiate paths through the targets, and at higher velocities because the vapor carried sufficient kinetic energy to re-entrain droplets. For typical designs, acceptable velocities range between 25% to 125% of the ideal value.

The Capacity Factor may be thought of as an indication of ability of a mist eliminator to drain liquids and avoid re-entrainment under various conditions. See Table for some typical baseline values.

TABLE 3
Standard Souders-Brown Coefficients
(k factors) for mesh and Plate-Pak™ Units

Pad Arrangement	k, ft/sec
1. Horizontal Style 4CA pad	0.35
2. Style 4CA MisterMesh® Pad	0.42
3. Horizontal Plate-Pak™ Unit *With or without MisterMesh® Pad below*	0.50
4. Vertical Plate-Pak™ Unit *With or without wire mesh ahead*	0.65

NOTE: Water and air, room temperature, pressure below 100 psia

ote that Souders-Brown equation provides correction for only gas and liquid densities. Should any conditions e ist which affect drainage or re-entrainment, the Capacity Factor must be pro-rated as appropriate.

After selecting the appropriate Capacity Factor and calculating the ideal vapor velocity, the cross-sectional area of mist eliminator is readily determined by dividing the volumetric flow rate by the velocity.

aving established this design velocity for the application, you can now predict the efficiency of a mesh pad for droplets of a particular size. This procedure is laborious and therefore well suited for a computer.

First, calculate the inertial parameter as follows, using consistent units of measurement

TEL: 800-231-0077 • FAX: 713-433-6201 • WEB: www.amacs.com • EMAIL: amacs@amacs.com

ED_002592B_00013275-00093

$\rho L - \rho$ Vd μD

Whe e di ensi nless ine tial pa a ete
V as el ity in ps
d Li uid d plet dia ete in t
μ as is sity in l t se
D Wi e ila ent dia ete in t

se this calculated value with Figure 12 to find the corresponding value of the impaction efficiency fraction . From Table 1, find S, the specific surface area for the mesh style of interest.

Subsequently determine S of the mist eliminator perpendicular to vapor flow and with a correction factor of 0.67 to remove that portion of the knitted wire not perpendicular to the gas flow

S Specific Surface Area 1 π Thickness (ft) 0.67
sing these values and T, the thickness of the pad, calculate the capture efficiency

E i ien y - e^{ESO}

Whe e SO C e ted Pad Spe i i
Su a e A ea t t
E l pa ti n e i ien y a ti n

This efficiency is the percent of all incoming droplets of the given diameter which will be captured rather than passing through the mist eliminator. The percentage will be higher for larger droplets and lower for smaller.

FIGURE 12

DETERMININ IMPACTION E ICIENC
RACTION E USIN INERTIAL PARAMETER

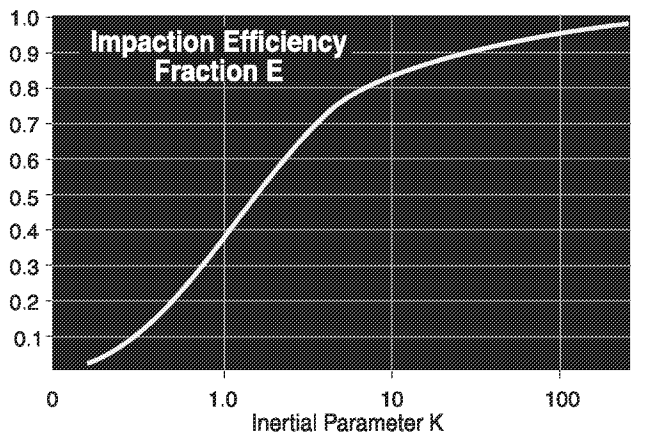

P edi tin P essu e D p

Although the operating pressure differential across a properly sized mesh pad or vane is never more than a few inches of water, pressure drop is an important design consideration in certain applications, particularly vacuum systems or larger columns requiring the movement of great quantities of gas. It has been shown that each inch of head loss requires some 0.16 hp scfm. A simple correlation has been developed to describe the pressure drop through a dry mist eliminator (no mist)

$\Delta P_{d\ y}$ 4VD ρ ST $\varepsilon \rho$

Whe e V as Supe i ial el ity Ft Se
ρ as Density l s t
S Spe i i su a e a ea esh t t
T Mesh Pad Thi kness - Ft
a itati nal nstant t se
ε Mesh V id F a ti n
ρ A ient Density ate l s t

Note: Applicable for wire diameter 0.0045" to 0.015".

The overall pressure drop is the sum of the head loss incurred as the gas travels through the mesh, as well as that due to the resistance to captured liquids. iquid accumulates as a pool in the bottom of the mist eliminator. If the liquid loading and velocity are such that a 2 deep pool accumulates in the bottom of the mesh pad, this amount must be added to that calculated using quation 3. Figure 13 summarizes pressure drop and velocity test data collected on the AMA S pilot plant for light and medium liquid loading.

ith due consideration given to the mist eliminator itself, the flow of fluid to and from it requires the same attention.

Inlet Diff sers

At high flow rates, primary removal of bulk liquids upstream of the mist eliminator is very important to prevent flooding. This is typically done in a cost effective manner by using a simple inlet diverter as shown in Fig. 15.

ith this design, liquids impinge upon the diverters, the flow is forced to flow laterally to allow bulk liquids to escape by gravity and eliminate the countercurrent momentum of the gas.

The *r rtia*, expressed as $\rho \upsilon^2$, is typically used to quantify the flow entering a vessel to determine whether a simple baffle will suffice. AMA S recommends inlet diverters to a Force of Inertia up to 2,500 lb ft s^2. Above this, more sophisticated distributors are recommended.

TEL: 800-231-0077 • FAX: 713-433-6201 • WEB: www.amacs.com • EMAIL: amacs@amacs.com

ED_002592B_00013275-00094

FIGURE 13

ACTUAL PRESSURE DROP VERSUS VELOCITY FOR TYPICAL AMACS MESH PADS AT LI HT AND MEDIUM LOADS

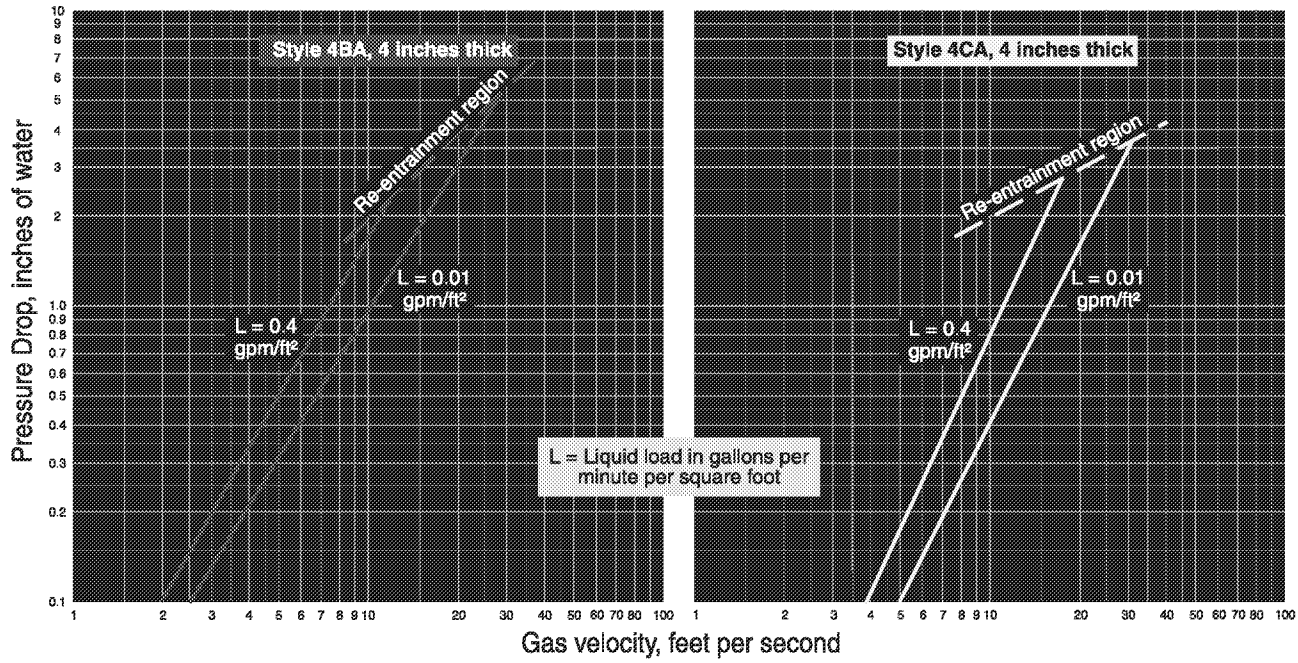

Decades ago, Dutch Shell Chemical Company introduced Schoepentoeter style bladed designs (Fig. 14). As the fluid flows a ially towards the shell opposite of the inlet nozzle, liquids are captured by specially placed blades. This design is superior because it allows the escape of liquids over a much greater region of the vessel. A simple inlet diverter (Fig. 15) would simply shear bulk liquids into smaller droplets at great flow rates

FIGURE 14

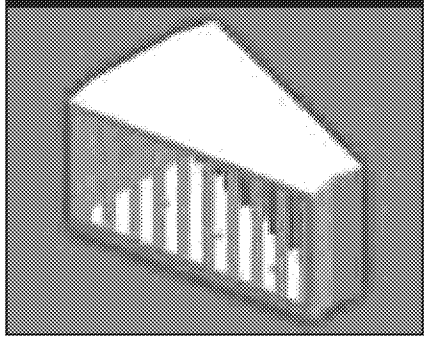

FIGURE 15

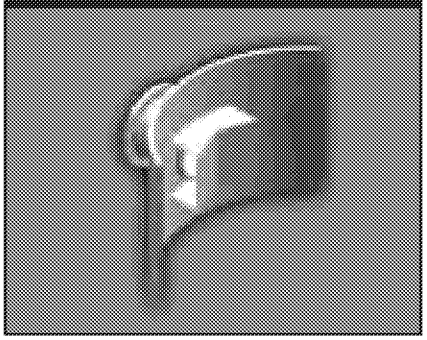

AMACS AccuFlow™ Inlet Diffuser (Fig. 16) is a similiar style of the bladed design in which the body of the diffuser maintains its shape, the restriction of flow which allows the escape of liquids over the diameter of the vessel is accomplished using internal blades of concentric and decreasing cross-sectional areas.

FIGURE 16

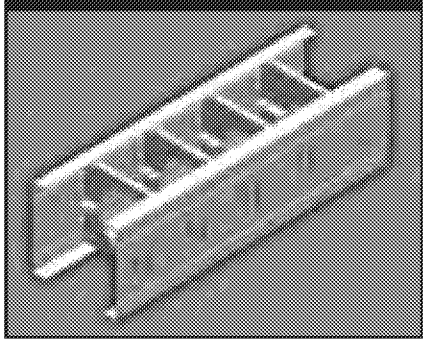

Vessel C n i u ati n

Several factors must be considered when deciding on the configuration of vessel internals. The first step is to determine the cross-sectional area needed. Then a tentative geometry and shape appropriate for both the vessel and plant location is selected. Figure 17 shows the most typical, but by no means complete, configurations. Mist eliminators can be of virtually any size or shape to accommodate all factors.

The performance of the mist eliminator depends strongly on an even velocity distribution over the cross-sectional area. As a general rule, a distance of either half the vessel diameter or 72 , which ever is smaller, is sufficient spacing both upstream and downstream of the element. Representations for specific cases are illustrated in Figure 18.

TEL: 800-231-0077 • FAX: 713-433-6201 • WEB: www.amacs.com • EMAIL: amacs@amacs.com

ED_002592B_00013275-00095

FIGURE 17

SIMPLIFIED VIEWS OF TYPICAL MIST ELIMINATOR CONFI URATIONS IN SEPARATOR VESSELS

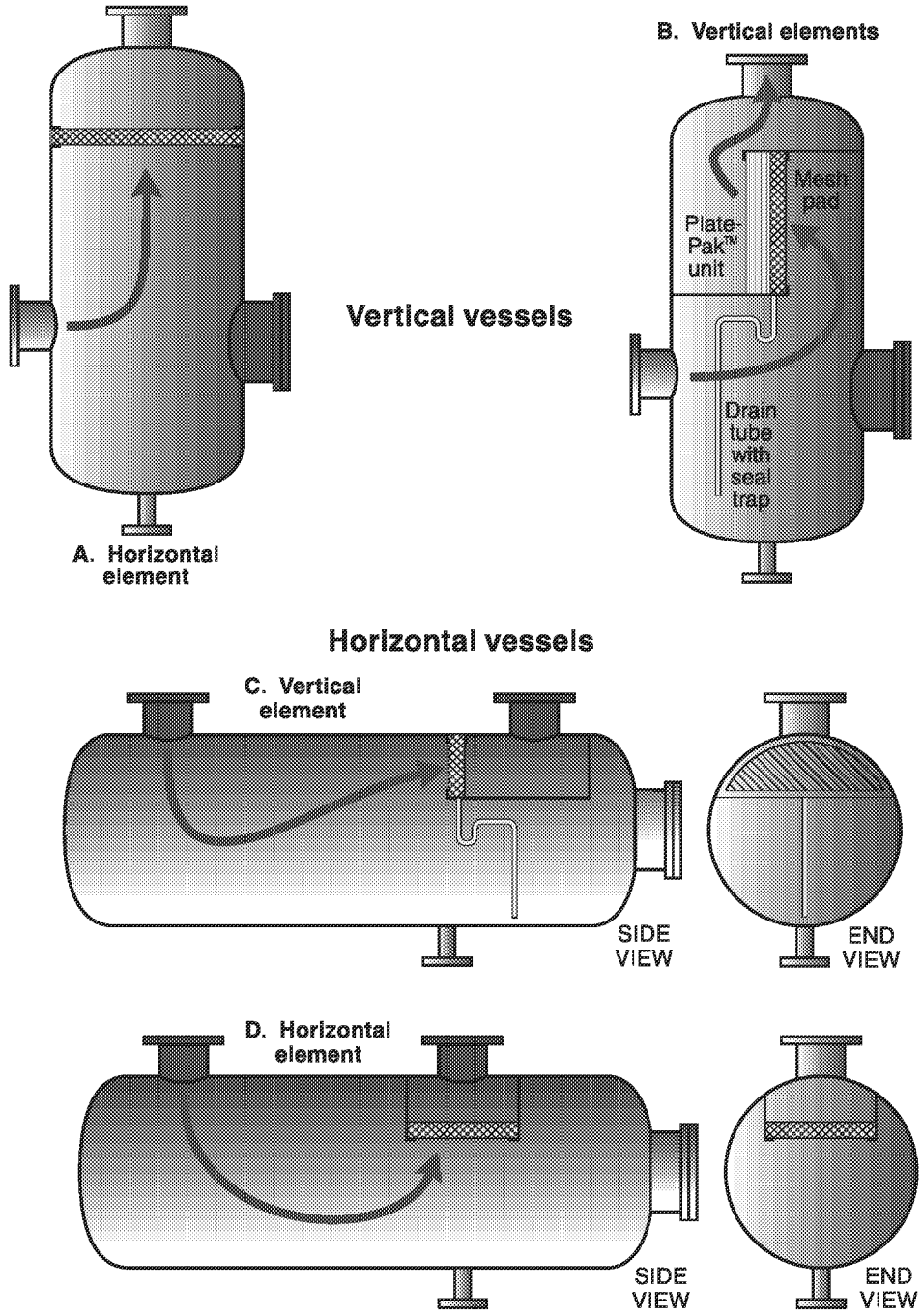

Small velocity differences across the surface are acceptable, but should be minimized at the design stage. therwise, some regions of the mist eliminator may be sub ected to heavy loading leading to re-entrainment while other regions are unused.

Most often, the mist eliminator is located ust upstream of the outlet nozzle with insufficient disengagement space. apor tends to channel through the pad in the region closest to the outlet nozzle and peripheral regions of the pad remain unused. To rectify this, AMACS engineers apply an *Integral Flow Distributor* which is welded to region(s) of the downstream face of the pad. This technique allows the engineer to selectively increase the pressure drop through regions of the pad likely to suffer from channeling, and is cost effective.

TEL: 800-231-0077 • FAX: 713-433-6201 • WEB: www.amacs.com • EMAIL: amacs@amacs.com

ED_002592B_00013275-00096

Ad an ed Mist Eli inat Desi ns

There are several modifications to mesh pads and vanes to dramatically enhance performance.

FIGURE 18

uidelines aintainin e en l dist i uti n a ss esh pads ane units ith a ial l in ylind i al es- sels Hei ht essel head is assu ed t e 4 essel dia ete Fl dist i uti n de i es an ini i e e ui ed disen a e ent spa e a e esh pads C nta t AMACS assistan e

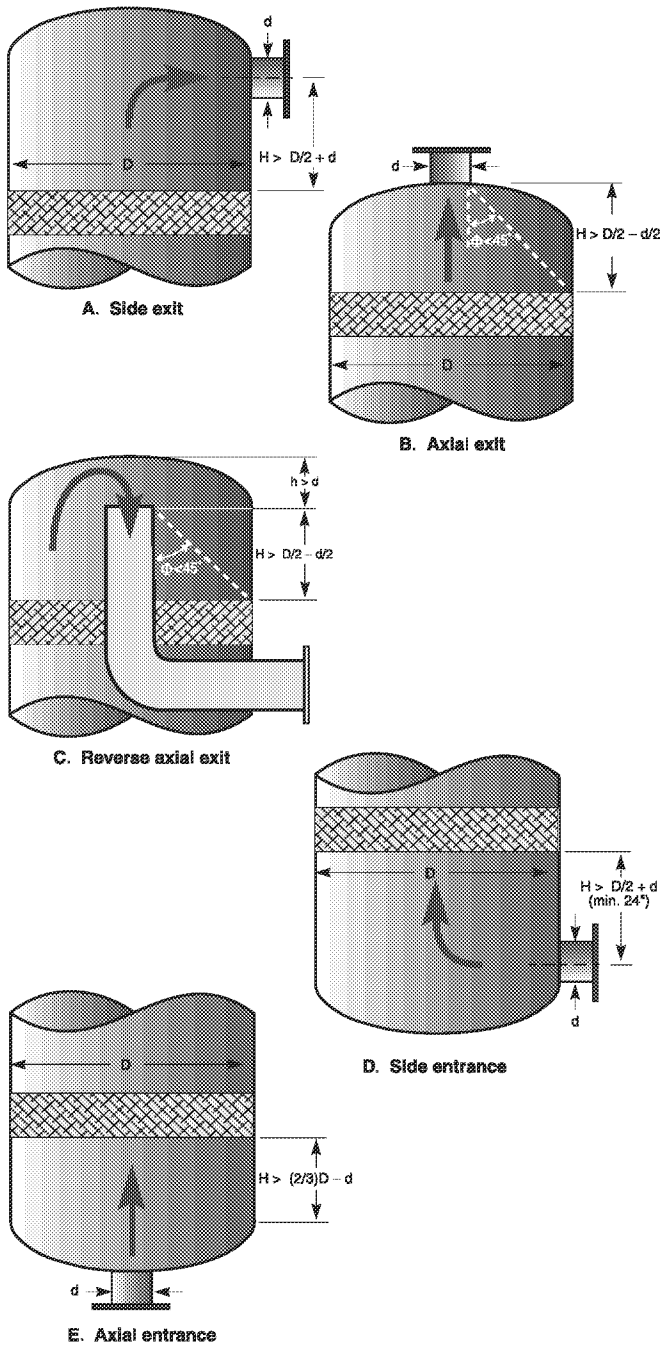

D aina e C lle ti n Laye in

Recall the discussion on pressure drop through a mist eliminator in which liquid tends to pool in the lower layers of mesh. The simplest technique to promote drainage is to use a few inches of open, porous mesh such as AMACS style 7CA (5-lb density with specific surface area as low as 45 sq-ft cu-ft) in the upstream position. As drainage occurs through the interstitial regions of the mesh, opening the knit enhances liquid drainage.

FIGURE 19

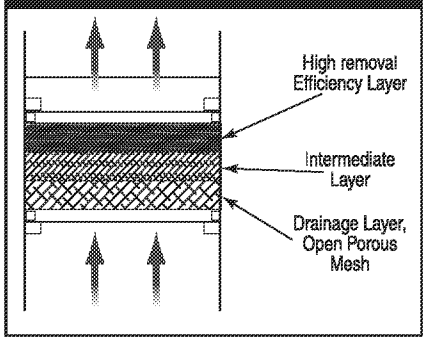

An e tension of this approach is to use higher specific surface area mesh in downstream positions to enhance separation efficiency, with intermediate mesh between the collection and drainage zones. Figure 19 illustrates a multilayer mist eliminator.

Miste Mesh D aina e C ils

A second technique used by AMACS to enhance liquid drainage, and often in con unction with multi-layering, is to append drainage coils to the upstream face of a horizontal mist eliminator as shown in Figure 20. The coils are also made of mesh and fill with liquid.

FIGURE 20

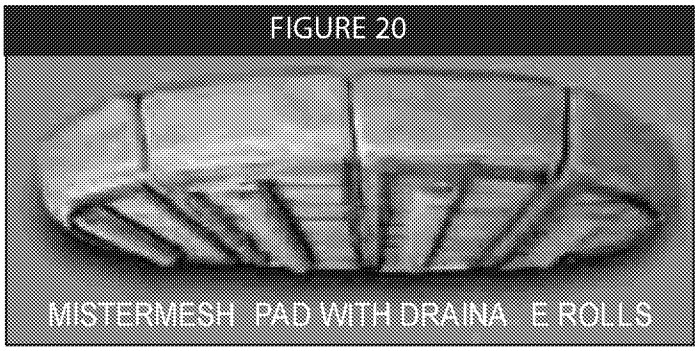

nce filled, liquid from the pad above is drawn by gravity and The Coanda ffect to the coils, thereby establishing distinct regions for liquid drainage and liquid collection in the upstream layers. Figure 21 compares the pressure drop and flooding point of both conventional and MisterMesh Mist liminators.

TEL: 800-231-0077 • FAX: 713-433-6201 • WEB: www.amacs.com • EMAIL: amacs@amacs.com

ED_002592B_00013275-00097

Mesh-Vane Asse lies

In grass root design of larger vessels and retrofit of e isting ones to accommodate greater flow rates, mesh-vane assemblies are often used. In an assembly, mesh is placed upstream of the vane and acts as a flooded agglomerator. The capacity factor used corresponds to the downstream vane element. This approach combines the efficiency of mesh with the capacity of vanes and has been used by AMACS engineers with tremendous success over the past two decades.

FIGURE 21

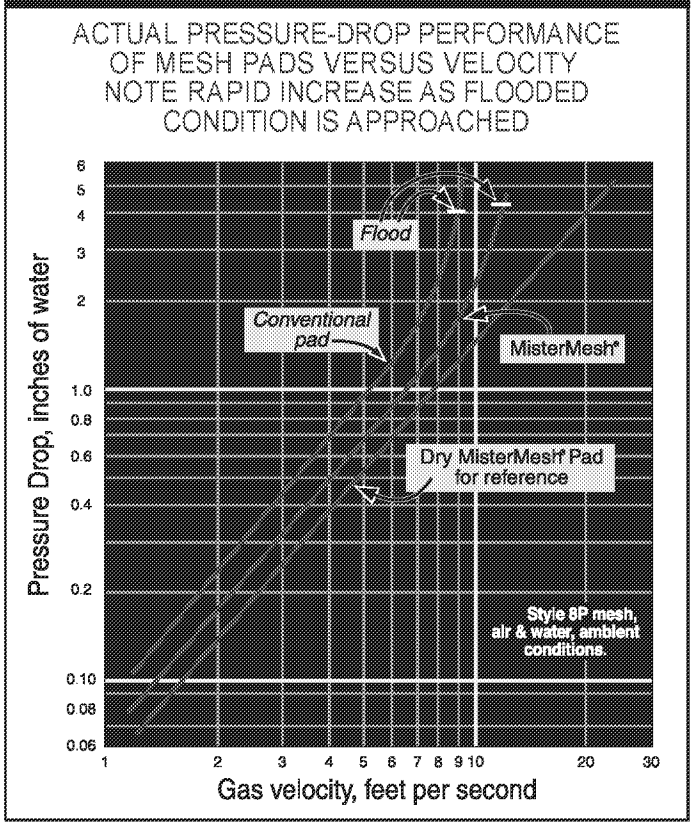

Throughout the industry there is ongoing debate as to whether the mesh should be positioned up- or downstream of the vane element. ngineers at AMACS have performed e haustive comparative testing on pilot plants and have much field data proving that the mesh is indeed affective upstream of the vane, unless the vane element is used as a pre-filter to protect a downstream mesh pad.

Use e et y

Another approach used in the industry when the size of the vessel is limited is to arrange the mist eliminator at an angle. The capacity increase is equal to the sine of the angle though it should not e ceed 45˚. This is shown in Figure 22 for smaller and larger diameters. An AMACS engineer should be consulted for such designs.

FIGURE 22

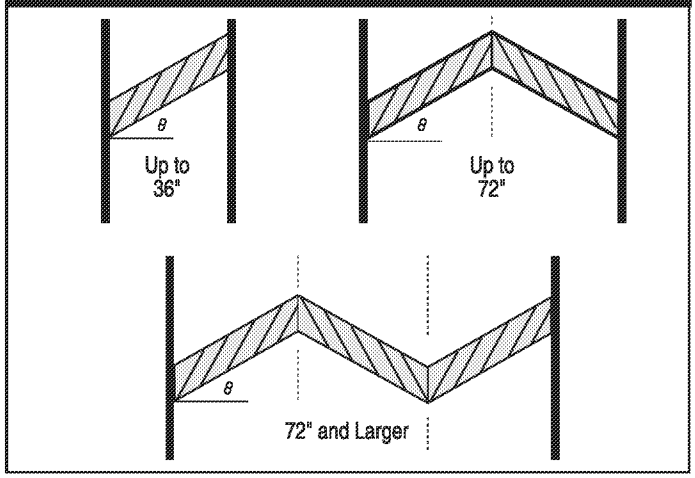

MultiP ket Vanes

The capacity of vertical vanes (with horizontal vapor flow) can also be increased by enhancing liquid drainage. As discussed, captured liquids are re-entrained when the velocity of vapor e ceeds the ideal. To prevent liquid re-entrainment, the serpentine path offered by the vane is augmented with obstructions to allow for the pooling of liquid with protection from the passing vapor stream. This design increases the capacity of the vane by as much as 25%. In vertical gas compressor knock-out drums, in which the vessel size is dictated by the capacity of the mist eliminator, MultiPocket anes considerably reduce the Foot-print and cost of skids.

Figure 2 summarizes the approaches used by AMACS and the reduction in vessel dimensions possible using these advanced designs.

The MultiPocket ane has been patented by AMACS.

FIGURE 23

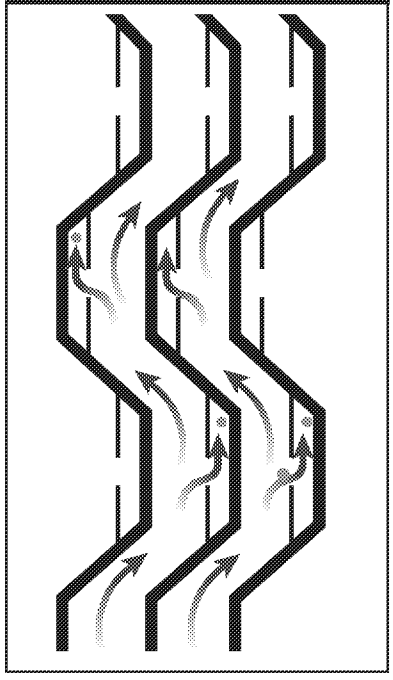

TEL: 800-231-0077 • FAX: 713-433-6201 • WEB: www.amacs.com • EMAIL: amacs@amacs.com

ED_002592B_00013275-00098

Reprinted with permission from CEP (Chemical Engineering Progress), April 2005.
Copyright © 2005 American Institute of Chemical Engineers (AIChE)

Pockets Improve This Mist Eliminator's Efficiency

ACS Industries, Inc (Now AMACS Process Tower Internals) was awarded US Patent #6,852,146 for a vane-type mist eliminator that removes entrained liquid droplets from high-velocity gas streams. Available commercially as the MultiPocket® vane assembly (Figure), it comprises a sheet fabricated from one piece of metal and featuring parallel rows of serpentine-like vanes. These sheets are held in their arrangement by bolts and spacers, not welds, as used in conventional designs. "This design prevents corrosion caused by internal welding and tights radius bends common in other high performance vane designs," says Kanti Patel, ACS engineering manager.

The vane blades are configured in such a way as to create pockets that allow droplets entrained in a gas stream to impinge and cling to the vane, and then drain, without being re-entrained. With horizontal flow, the separated liquid drains perpendicularly to the gas stream, thereby preventing gas-liquid traffic below the Plate-Pak™ vanes. This feature allows higher flows. Third party testing shows that the MultiPocket® vanes exhibited a 3.4 — 14.1% capacity increase before breakthrough (liquid carryover) occurs downstream.

For any given installation thickness of the vanes, the number of pockets, spacing of the vanes, and other parameters can be varied to achieve the desired separation. The prefabricated unit comes in either a single piece ready for installation, or in smaller sections that can be installed through a vessel manway. To complete the installation a fabricated housing and a liquid drain are added, followed by welding or bolting of the entire unit in the vessel.

Gaston Rodriguez, process equipment proposals manager at the Hanover Co. (Houston, TX; www.hanover-co.com) provided the following case data in support of the MultiPocket® vane. A recent application for this product was in a vertical 2-phase scrubber handling 125 million ft^3/d of natural gas at an operating pressure of 350 psig and 90˚F. Using the MultiPocket® vane allowed for the reduction of the vessel diameter from 60 inches to 54 inches. The material, labor and installation savings was $6,500.

In other applications where pressure drop is critical, such as gas pipeline and utility contracts, the MultiPocket® vane provides the minimum pressure drop at the highest mist elimination efficiency. Tests has shown that for an inlet water spray loading of 2 gpm/ft^2 and air velocities of 10–25 ft/s, the pressure drop for a horizontal orientation is about 15% less than with the conventional vane.

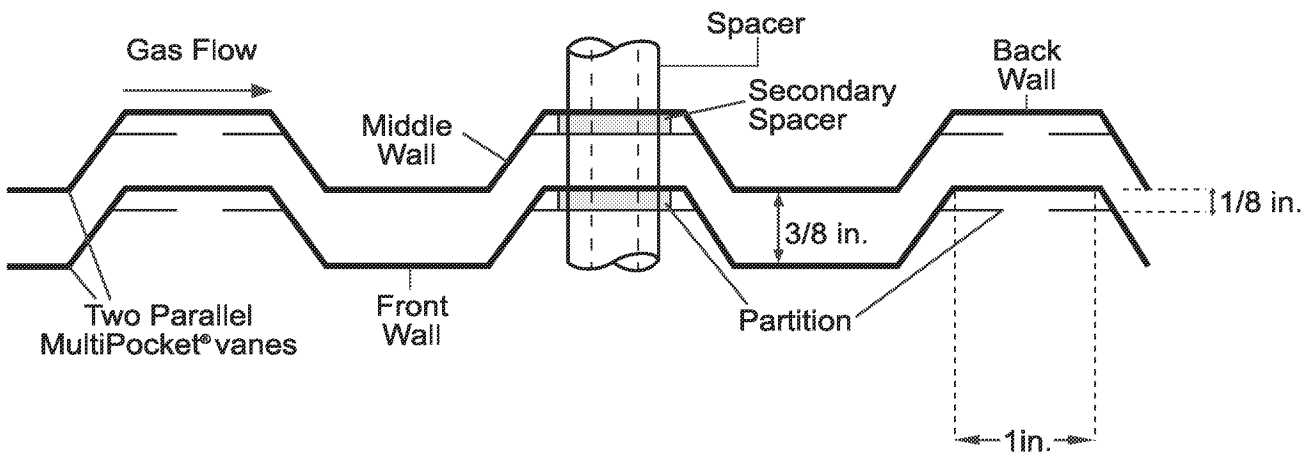

The MultiPocket® vane is a thin sheet that is formed into hills and valleys. The gas stream enters one side and takes a zig-zag path to reach the other side. Pockets formed by partitions allow droplets entrained in a gas stream to impinge and cling to the vane, and then drain, without being re-entrained.

TEL: 800-231-0077 • FAX: 713-433-6201 • WEB: www.amacs.com • EMAIL: amacs@amacs.com

ED_002592B_00013275-00099

MistFix® Insertion Mist Eliminators

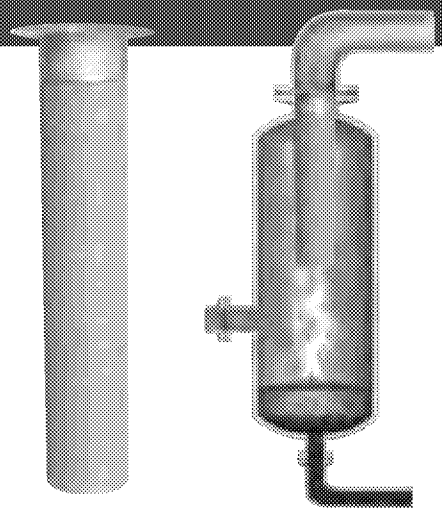

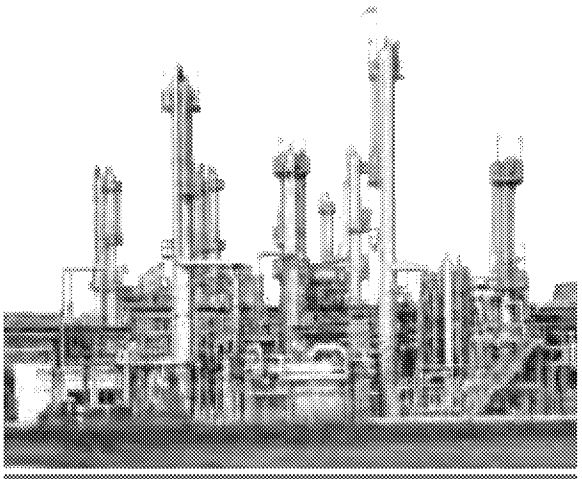

MistFix® U.S. Patent #5985004

The patented AMACS MistFix® can solve carryover problems in vessels without a mist eliminator, as well as in vessels with a less efficient or damaged mist eliminator.

In existing vessels that do not have a manway, the MistFix® Insertion Mist Eliminator is an ideal choice. It is suitable for any vessel having an 8" or larger gas outlet nozzle at the top. It also eliminates the need for hazardous entry permits. Since there is no need to enter the vessel, this drastically reduces downtime, resulting in quicker turnarounds, reduced maintenance cost and production gains.

MistFix® also eliminates the need for modifications to vessels. For new vessels MistFix® may eliminate the need for a manway and reduce vessel cost. It also makes future maintenance easier and simpler.

AMACS MistFix® can easily be installed and replaced from the outside. Existing vessels require no modifications to accommodate the MistFix.®

Advantages:

- No Cutting of existing vessel
- No Welding
- No Hazardous Entry
- No ASME re-certification
- No Scaffolding
- Minimal Downtime

Figure 3. MistFix™ insertion mist eliminator

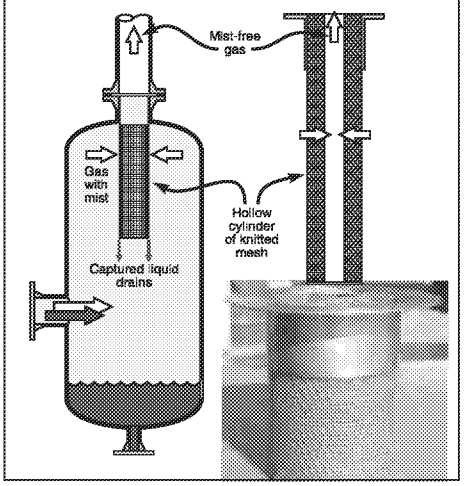

For more information please call:

1-800-231-0077

www.amacs.com

AMACS

Amistco Separation Products Inc, and ACS Separations and Mass Transfer Products, are Registered Trademarks of AMACS

TEL: 800-231-0077 • FAX: 713-433-6201 • WEB: www.amacs.com • EMAIL: amacs@amacs.com

ED_002592B_00013275-00100

MAXCAP®

mist eliminator with 43% more capacity

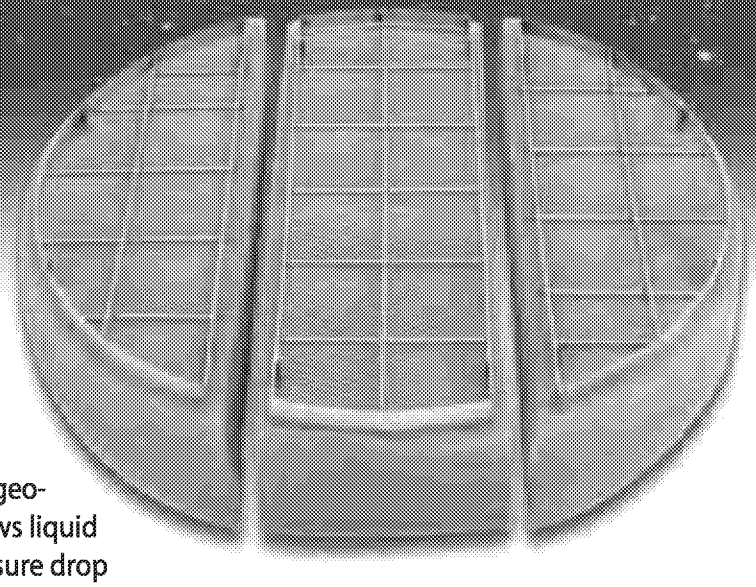

Our engineers have developed a new mist eliminator that has more vapor handling capacity than any other in-kind replacement pad on the market today. Its unique geometric construction allows liquid to drain with lower pressure drop performance than other pads. Efficiency is gained, not lost. Price-wise…the new maximum capacity pad costs about the same as other MisterMesh® mist eliminators.

MisterMesh® and MultiPocket® are registered trademarks and Plate-Pak™ and MaxCap® are registered trademarks of AMACS Process Tower Internals.

*The MaxCap® mist eliminator is generally used for replacing conventional mesh pads and is recommended only for vertical flow service. The MaxCap® mist eliminator is currently only used separately; not in a mesh-vane combination.

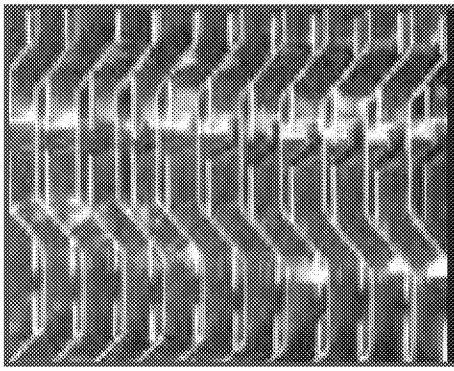

When you need something stronger than mesh… Try AMACS Plate Pak vane or MultiPocket® vane. Not only are our vane mist eliminators tough (they are constructed of high-grade steel), but they also perform at very high vapor loads (they're often used to boost the liquid capacity of mesh pads). These specialty vane units can be used without a pad in either a horizontal or vertical flow configuration. They are designed to catch more droplets, and reduce eddy turbulence. As a result, they are more efficient, have more through-put, and cause less pressure drop than other similar products available today. Even though our vanes are normally supplied in stainless steel, we can provide them in almost any metal alloy or surface finish to resist even the most corrosive (and abrasive) service conditions. *(US Patent 6,852,146)*

Call us today to see if the new MisterMesh® MaxCap® mist eliminator can help you increase your vessel's service capacity or to find out if the AMACS vane or MultiPocket® vane might be a better solution for your next demanding mist elimination service.

AMACS

24/7 EMERGENCY SERVICE

ON-SITE ENGINEERING & FABRICATION FOR ALL YOUR VESSEL & TOWER INTERNALS

ED_002592B_00013275-00101

FIGURE 24

APP I C MBI ATI S F AMACS M S PADS
A D P AT -PA ™ A ITS T MI IMI SS
SI

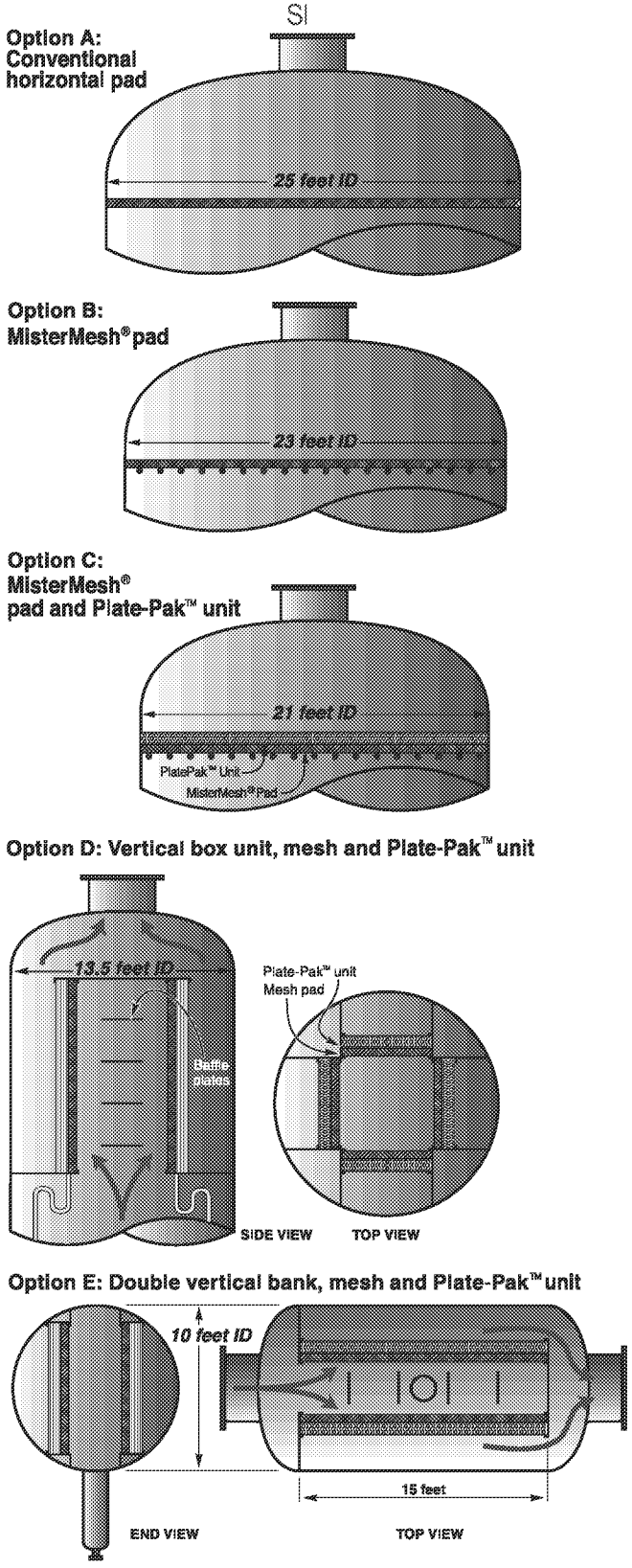

CASE STUDIES E AMPLES

Case Study Nu e

Problem In an Cl scrubber, an air stream of 60 acfs is coming off a bed of random packing and contains droplets of a weak acid. The unit operates at 122 psia at 82˚F. Determine the size of mist eliminator required to remove this mist and the removal efficiency possible.

Solution Since the acid is dilute we assume the density and viscosity of water at the operating pressure and temperature

ρ_L 4 l t
ρ l t
P l t
T ˚F
F t se

The first step is to select the mist eliminator type and mesh style. As shown in Figure 24, mist coming to the mesh pad is typically comprised of droplets ranging in size from as small as 5 µm, so we select a mesh style mist eliminator to achieve this level of performance. From e perience, the capacity factor for poly mesh at moderate liquid loading and lower pressures is ~.27 fps. sing the Souders-Brown equation the ideal velocity is calculated

V_{ideal} k ρ_L- ρ ρ
V_{ideal} 4-
V_{ideal} 4 ps

The cross-sectional area of mist eliminator is determined by dividing the volumetric flow rate by the ideal velocity

A ea Mist Eli inat V lu et i Fl Rate
Supe i ial Vap Vel ity

A ea Mist Eli inat t se 4 ps

A ea Mist Eli inat t

The corresponding diameter is 6 .4 , rounded up to a standard 66 scrubber vessel. ote that performing the same calculations using a vane (and a capacity factor of 0.50) yields an ideal vessel diameter of 46.7 , rounded up to a standard 48 ID vessel. To calculate the removal efficiency at 5 µm, several parameters must be identified to use equation 2 to determine the inertial parameter

TEL: 800-231-0077 • FAX: 713-433-6201 • WEB: www.amacs.com • EMAIL: amacs@amacs.com

ED_002592B_00013275-00102

$$\rho L - \rho \quad Vd \quad \mu D$$
$$ps$$

From Figure 12, the corresponding Impaction fficiency Fraction is ~0.08. In the Removal fficiency quation there is a term for the corrected specific surface area S

$$SO \quad Spe\ i\ i \quad Su\ a\ e\ A\ ea \quad \pi$$
$$Thi\ kness \quad t$$

For ACS style 8P, the specific surface area is (185 6) 221 ft^2 ft , we will try both 4 and 6 thick mist eliminator thicknesses (1 and 1 2ft)

$$SO \qquad 4$$
$$SO_{4\ thi\ k} \quad \text{and } SO_{thi\ k}$$

And Re al E i ien y E at μ is

$$E\ i\ ien\ y \qquad e^{ESO}$$
$$E\ i\ ien\ y \qquad e$$
$$E\ i\ ien\ y$$

For the 6 thick element, the removal efficiency is 84.8%. By using a composite pad containing a 2 layer of regular monofilament polypropylene, style 8P, upstream of a 2 thick layer of 8PP, mono- and multi-filament co-knit, the removal efficiency is 99.9% .

CASE STUDY

Traditionally, trays are used to bring about contact between glycol and natural gas in dehydration contactors. In recent years, the industry moved towards smaller diameter columns by e ploiting the higher capacities achieved with structured packing. owever, the lower capital investment associated with a smaller diameter packed tower is often offset by dramatically increased glycol losses.

Consider a mid-western sour gas plant operating a 96 glycol contactor and processing 1, 10,000 lb hr of gas at 116˚F and 1214 psia. The gas and liquid specific densities were 4.4 and 68 lb cu-ft respectively. The plant was e periencing 0.1 S gal of carryover per mmscf, amounting to some 65 gal day of lost triethylene glycol, several hundred dollars worth per day. A 10 thick wire mesh mist eliminator of 12-lb mass density was installed above the packing.

From e perience, AMACS engineers knew that the droplet size distribution for glycol coming off the top of a packed dehydrator e tends down to diameters of 5 µm and greater. Also, if the diameter of the packed column was sized in accordance with the hydraulic requirements of the packing, the wire mesh mist eliminator would be undersized.

The capacity factor for 12-lb density mesh in this service is ~0.2 0.27, having been de-rated for the high liquid viscosity of 18 cP (which retards liquid drainage) and relatively high operating pressure. sing the gas density, volumetric flow rate and cross-sectional area of the mist eliminator, the actual superficial velocity is readily calculated. e t, using known densities of the gas and glycol, the actual or operating Capacity Factor k is determined

$$V_{a\ tual} \quad k_{a\ tual} \quad \rho L - \rho \quad \rho$$

Re-a an in

$$k_{a\ tual} \quad V_{a\ tual} \quad \rho L - \rho \quad \rho$$
$$44 \quad ps$$

A Capacity Factor of 0.44 fps is almost twice as high as the optimum, and is in the range of that of an AMACS Plate-Pak™ ane mist eliminator. owever, the vane will not remove particles down to 5 µm, so a mesh-vane assembly was proposed. The assembly has a multiple layers of mesh. The first layer is composed of highly porous mesh (AMACS style 7CA), followed by a layer of the high specific surface area (AMACS style 8DT) co-knit mesh of stainless and Dacron Fibers. MisterMesh drainage coils were appended to the bottom face of the mist eliminator. Downstream of the mesh was placed a Plate-Pak™ vane. The total thickness was 12 and was accommodated using the same supports as the mist eliminator it replaced.

Carryover from a glycol contactor occurs through two mechanisms, evaporative losses and mechanical (carryover losses). In this e ample, simulations showed evaporative glycol losses of 0.0054 gal mmscfd. The total losses after the revamp were less than 0.008 gal mmscfd, and carryover losses had been reduced from 0.1 gal mmscfd, a 94% reduction

TEL: 800-231-0077 • FAX: 713-433-6201 • WEB: www.amacs.com • EMAIL: amacs@amacs.com

ED_002592B_00013275-00103

AMACS
PROCESS TOWER INTERNALS
14211 Industry Street, Houston, Texas 77053
Telephone: (713) 434-0934 or (800) 231-0077
Fax: (713) 433-6201 • E-mail: amacs@amacs.com
Website: www.amacs.com

Technical Data Sheet • Mist Eliminator

Company Information

Company:	Contact (Name/Title):
Address:	TEL: ( ) FAX: ( ) E-mail:

State Your Mist Eliminator Appliction

Process Conditions (Provide appropriate units)

Operating Temperature: deg F / deg C		Operating Pressure:	psia (psig)
Gas Type:	Flow Rate: MAX.:	MIN.:	lb/hr/(acfm)
Vapor Density or SG or Mol. Wt.:		Compressibility Factor:	Viscosity: cp
Liquid Type:	Qty.: gpm	Density or SG:	Viscosity: cp
Solids/Foulants: Yes No	If Yes, Explain:		

Vessel Details NEW EXISTING

Dia:	Ht./Length:
Manway Size:	Horiz.: Vert.
Material:	Housing Required? YES NO

Desired Separation

.....% removal of.....µm Droplets

.....

..... wt% / vol% / ppm in exit gas

Mist Eliminator

Preferred Type: Wire Mesh Vane
Materials:
Remarks:

Sketch

ED_002592B_00013275-00104

HIGH CAPACITY MIST ELIMINATORS
OUT PERFORM CONVENTIONAL TECHNOLOGY!

ADVANCED TECHNOLOGY FOR DEBOTTLENECKING!

Our MisterMesh® Mist Eliminator out performs conventional pads. The drainage rolls accelerate liquid removal thus increasing capacity and reducing pressure drop. Used in conjunction with our Plate-Pak™ vane, the MisterMesh drain rolls can increase capacity by over 200% while separating droplets down to 3 microns.

AMACS

24-hour emergency service • Free technical support • 50 years experience

800-231-0077

14211 Industry Street • Houston, TX 77053 • TEL: 713-434-0934 • FAX: 713-433-6201
Email: amacs@amacs.com • Visit our web site www.amacs.com