APPENDIX F

Calibration Gas Certificates / Equipment Calibrations

PRAXAIR

Praxair
5700 South Alameda Street
Los Angeles, CA 90058
Telephone: (323) 585-2154
Facsimile: (714) 542-6689

DocNumber: 000036386

CERTIFICATE OF ANALYSIS / EPA PROTOCOL GAS

Customer & Order Information:

MAINE OXY
22 ALBISTON WAY
AUBURN ME 042100

Praxair Order Number: 03452243
Customer P. O. Number: 100594
Customer Reference Number:

Fill Date: 2/20/2012
Part Number: EV A3PR8500E-AS
Lot Number: 109205114
Cylinder Style & Outlet: AS CGA 590
Cylinder Pressure & Volume: 2000 psig 140 cu. ft.

Certified Concentration:

Expiration Date:	3/2/2015	NIST Traceable
Cylinder Number:	CC111354	Analytical Uncertainty:
8367 ppm	PROPANE	± 1 %
Balance	AIR	

Certification Information: *Certification Date:* 3/2/2012 *Term:* 36 Months *Expiration Date:* 3/2/2015

This cylinder was certified according to the 1997 EPA Traceability Protocol, Document #EPA-600/R-97/121, using Procedure G1

Do Not Use this Standard if Pressure is less than 150 PSIG

PGVP I.D.# F22012

Analytical Data: *(R=Reference Standard, Z=Zero Gas, C=Gas Candidate)*

1. Component: PROPANE

Requested Concentration: 8500 ppm
Certified Concentration: 8367 ppm
Instrument Used: HP 5890 Series II S/N 3108A34409
Analytical Method: GC/ Thermal Conductivity
Last Multipoint Calibration: 2/11/2012

Reference Standard Type: GMIS
Ref. Std. Cylinder # : CC 183608
Ref. Std. Conc: 1.01 %
Ref. Std. Traceable to SRM # : vs. 2647a
SRM Sample # : 104-4-B
SRM Cylinder # : FF 28607

First Analysis Data:							Date:	3/2/2012
Z:	0	R:	710830	C:	587712	Conc:	8361	
R:	709187	Z:	0	C:	587699	Conc:	8370	
Z:	0	C:	587041	R:	707581	Conc:	8379	
UOM:	uV			Mean Test Assay:			8367 ppm	

Second Analysis Data:							Date:	
Z:	0	R:	0	C:	0	Conc:	0	
R:	0	Z:	0	C:	0	Conc:	0	
Z:	0	C:	0	R:	0	Conc:	0	
UOM:	uV			Mean Test Assay:			0 ppm	

Analyzed by: Rolonda Kaywood

Certified by: Shameela Jiffrey

Information contained herein has been prepared at your request by qualified experts within Praxair Distribution, Inc. While we believe that the information is accurate within the limits of the analytical methods employed and is complete to the extent of the specific analyses performed, we make no warranty or representation as to the suitability of the use of the information for any purpose. The information is offered with the understanding that any use of the information is at the sole discretion and risk of the user. In no event shall the liability of Praxair Distribution, Inc., arising out of the use of the information contained herein exceed the fee established for providing such information.

PRAXAIR

Praxair Distribution Mid-Atlantic
145 Shimersville Rd.
Bethlehem, PA 18015
Telephone: (610) 317-1608
Facsimile: (610) 758-8382

DocNumber: 000016765

CERTIFICATE OF ANALYSIS / EPA PROTOCOL GAS

Customer & Order Information:

MAINE OXY
22 ALBISTON WAY
AUBURN ME 042100

Praxair Order Number: 03519131
Customer P. O. Number: 103290
Customer Reference Number:

Fill Date: 3/20/2012
Part Number: AI PR5000E-AS
Lot Number: 917208047
Cylinder Style & Outlet: AS CGA 590
Cylinder Pressure & Volume: 1280 psig 91cu. ft.

Certified Concentration:

Expiration Date:	3/26/2015		NIST Traceable
Cylinder Number:	SA20684		Analytical Uncertainty:
5010	ppm	PROPANE	± 1 %
	Balance	AIR	

Certification Information: *Certification Date:* 3/26/2012 *Term:* 36 Months *Expiration Date:* 3/26/2015

This cylinder was certified according to the 1997 EPA Traceability Protocol, Document #EPA-600/R-97/121, using Procedure G1

Do Not Use this Standard if Pressure is less than 150 PSIG

PGVP ID#F12012

Analytical Data: *(R=Reference Standard, Z=Zero Gas, C=Gas Candidate)*

1 . Component: PROPANE

Requested Concentration: 5000 ppm
Certified Concentration: 5010 ppm
Instrument Used: VARIAN 3300 INST 023 (PROPANE)
Analytical Method: FID
Last Multipoint Calibration: 3/7/2012

Reference Standard Type: GMIS
Ref. Std. Cylinder # : ND22127
Ref. Std. Conc: 4943 PPM
Ref. Std. Traceable to SRM # : 2648a
SRM Sample # : 105-C-16
SRM Cylinder # : XF000465B

First Analysis Data:						Date:	3/28/2012
Z:	0	R:	4941.5	C:	5010	Conc:	5009.5
R:	4945	Z:	0	C:	5009.4	Conc:	5008.9
Z:	0	C:	5013.5	R:	4943.9	Conc:	5013.0
UOM:	PPM			Mean Test Assay:			5010.5 PPM

Second Analysis Data:						Date:	
Z:	0	R:	0	C:	0	Conc:	0
R:	0	Z:	0	C:	0	Conc:	0
Z:	0	C:	0	R:	0	Conc:	0
UOM:	PPM			Mean Test Assay:			0 PPM

Analyzed by: John Pribish

Certified by: Michelle Kostik

Information contained herein has been prepared at your request by qualified experts within Praxair Distribution, Inc. While we believe that the information is accurate within the limits of the analytical methods employed and is complete to the extent of the specific analyses performed, we make no warranty or representation as to the suitability of the use of the information for any purpose. The information is offered with the understanding that any use of the information is at the sole discretion and risk of the user. In no event shall the liability of Praxair Distribution, Inc., arising out of the use of the information contained herein exceed the fee established for providing such information.

PRAXAIR

Praxair Distribution Mid-Atlantic
145 Shimersville Rd.
Bethlehem, PA 18015
Telephone: (610) 317-1608
Facsimile: (610) 758-8382

DocNumber: 000016191

CERTIFICATE OF ANALYSIS / EPA PROTOCOL GAS

Customer & Order Information:

MAINE OXY
22 ALBISTON WAY
AUBURN ME 042100

Praxair Order Number: 03452234
Customer P. O. Number: 100694
Customer Reference Number:

Fill Date: 2/17/2012
Part Number: AI PR5000E-AS
Lot Number: 917206147
Cylinder Style & Outlet: AS CGA 590
Cylinder Pressure & Volume: 1540 psig 112 cu. ft.

Certified Concentration:

Expiration Date:	2/22/2015	NIST Traceable
Cylinder Number:	CC311566	Analytical Uncertainty:
5052 ppm	PROPANE	± 1 %
Balance	AIR	

Certification Information: *Certification Date:* 2/22/2012 *Term:* 36 Months *Expiration Date:* 2/22/2015

This cylinder was certified according to the 1997 EPA Traceability Protocol, Document #EPA-600/R-97/121, using Procedure G1

Do Not Use this Standard if Pressure is less than 150 PSIG

PGVP ID#F12012

Analytical Data: *(R=Reference Standard, Z=Zero Gas, C=Gas Candidate)*

1. Component: PROPANE

Requested Concentration: 5000 ppm
Certified Concentration: 5052 ppm
Instrument Used: VARIAN 3300 INST 023 (PROPANE)
Analytical Method: FID
Last Multipoint Calibration: 2/8/2012

Reference Standard Type: GMIS
Ref. Std. Cylinder # : ND22127
Ref. Std. Conc. 4943 PPM
Ref. Std. Traceable to SRM # : 2648a
SRM Sample # : 106-C-16
SRM Cylinder # : XF000465B

First Analysis Data:						Date:	2/22/2012
Z:	0	R:	4943.4	C:	5046.6	Conc:	5047
R:	4943.8	Z:	0	C:	5055.3	Conc:	5055.7
Z:	0	C:	5052.2	R:	4940.7	Conc:	5052.6
UOM:	PPM			Mean Test Assay:			5051.7 PPM

Second Analysis Data:						Date:	
Z:	0	R:	0	C:	0	Conc:	0
R:	0	Z:	0	C:	0	Conc:	0
Z:	0	C:	0	R:	0	Conc:	0
UOM:	PPM			Mean Test Assay:			0 PPM

Analyzed by: Robin Morgan

Certified by: Michelle Kostik

Information contained herein has been prepared at your request by qualified experts within Praxair Distribution, Inc. While we believe that the information is accurate within the limits of the analytical methods employed and is complete to the extent of the specific analyses performed, we make no warranty or representation as to the suitability of the use of the information for any purpose. The information is offered with the understanding that any use of the information is at the sole discretion and risk of the user. In no event shall the liability of Praxair Distribution, Inc., arising out of the use of the information contained herein exceed the fee established for providing such information.

PRAXAIR

Praxair
5700 South Alameda Street
Los Angeles, CA 90058
Telephone: (323) 585-2154
Facsimile: (714) 542-6689

DocNumber: 000040307

CERTIFICATE OF ANALYSIS / EPA PROTOCOL GAS

Customer & Order Information:

WELCO CGI GAS TECH LLC GAS
PO BOX 1377
DES MOINES IA 503050

Praxair Order Number: 20728053
Customer P. O. Number: 3708607-MAINE
Customer Reference Number:

Fill Date: 6/27/2012
Part Number: EV AIPR3000E-AS
Lot Number: 109217909
Cylinder Style & Outlet: AS CGA 590
Cylinder Pressure & Volume: 2000 psig 140 cu. ft.

Certified Concentration:

Expiration Date:	7/10/2015		NIST Traceable
Cylinder Number:	CC103130		Analytical Uncertainty:
2961	ppm	PROPANE	± 1 %
	Balance	AIR	

Certification Information: *Certification Date:* 7/10/2012 *Term:* 36 Months *Expiration Date:* 7/10/2015

This cylinder was certified according to the 1997 EPA Traceability Protocol, Document #EPA-600/R-97/121, using Procedure G1

Do Not Use this Standard If Pressure is less than 150 PSIG

PGVP I.D.# F22012

Analytical Data: *(R=Reference Standard, Z=Zero Gas, C=Gas Candidate)*

1. Component: PROPANE

Requested Concentration: 3000 ppm
Certified Concentration: 2961 ppm
Instrument Used: HORIBA, FIA-510, 851135122
Analytical Method: Flame Ionization
Last Multipoint Calibration: 6/11/2012

Reference Standard Type: GMIS
Ref. Std. Cylinder # : SA 15840
Ref. Std. Conc: 2656 ppm
Ref. Std. Traceable to SRM # : vs. 2647a
SRM Sample # : 104-4-B
SRM Cylinder # : FF26607

First Analysis Data:			Date: 7/6/2012
Z: 0	R: 194772	C: 216456	Conc: 2952
R: 194112	Z: 0	C: 217248	Conc: 2972
Z: 0	C: 215749	R: 193553	Conc: 2960
UOM: ppm		Mean Test Assay:	2961 ppm

Second Analysis Data:			Date:
Z: 0	R: 0	C: 0	Conc: 0
R: 0	Z: 0	C: 0	Conc: 0
Z: 0	C: 0	R: 0	Conc: 0
UOM: ppm		Mean Test Assay:	0 ppm

Analyzed by: Shameela Jiffrey

Certified by: Ying Ye

Information contained herein has been prepared at your request by qualified experts within Praxair Distribution, Inc. While we believe that the information is accurate within the limits of the analytical methods employed and is complete to the extent of the specific analyses performed, we make no warranty or representation as to the suitability of the use of the information for any purpose. The information is offered with the understanding that any use of the information is at the sole discretion and risk of the user. In no event shall the liability of Praxair Distribution, Inc., arising out of the use of the information contained herein exceed the fee established for providing such information.

PRAXAIR

Praxair
5700 South Alameda Street
Los Angeles, CA 90058
Telephone: (323) 585-2154
Facsimile: (714) 542-6689

DocNumber: 000040326

CERTIFICATE OF ANALYSIS / EPA PROTOCOL GAS

Customer & Order Information:

WELCO CGI GAS TECH LLC GAS
PO BOX 1377
DES MOINES IA 503050

Praxair Order Number: 20728094
Customer P. O. Number: 3708404-MAINE
Customer Reference Number:

Fill Date: 6/27/2012
Part Number: EV AIME850ME-AS
Lot Number: 109217904
Cylinder Style & Outlet: AS CGA 590
Cylinder Pressure & Volume: 2000 psig 140 cu. ft.

Certified Concentration:

Expiration Date:	7/10/2015		NIST Traceable
Cylinder Number:	CC246069		Analytical Uncertainty:
860	ppm	METHANE	± 2 %
Balance		AIR	

Certification Information: *Certification Date:* 7/10/2012 *Term:* 36 Months *Expiration Date:* 7/10/2015

This cylinder was certified according to the 1997 EPA Traceability Protocol, Document #EPA-600/R-97/121, using Procedure G2

Do Not Use this Standard if Pressure is less than 150 PSIG

G2 analysis was done using STEC INC SGD-710c @20% (cf=0.2). PGVP I.D.# F22012

Analytical Data: *(R=Reference Standard, Z=Zero Gas, C=Gas Candidate)*

1. **Component:** METHANE

Requested Concentration: 850 ppm
Certified Concentration: 860 ppm
Instrument Used: HORIBA, FIA-510, 851135122
Analytical Method: Flame Ionization Detector
Last Multipoint Calibration: 6/11/2012

Reference Standard Type: GMIS
Ref. Std. Cylinder # : CC 8533
Ref. Std. Conc: 229 ppm
Ref. Std. Traceable to SRM # : vs. 2761
SRM Sample # : 212-06-AL
SRM Cylinder # : SX-20000

First Analysis Data:						Date:	7/6/2012
Z:	0	R:	229	C:	171.4	Conc:	171
R:	229	Z:	0	C:	171.6	Conc:	172
Z:	0	C:	172.8	R:	229	Conc:	173
UOM:	ppm			Mean Test Assay:			172 ppm

Second Analysis Data:						Date:	
Z:	0	R:	0	C:	0	Conc:	0
R:	0	Z:	0	C:	0	Conc:	0
Z:	0	C:	0	R:	0	Conc:	0
UOM:	ppm			Mean Test Assay:			0 ppm

Analyzed by: Shameela Jiffrey

Certified by: Ying-Yu

Information contained herein has been prepared at your request by qualified experts within Praxair Distribution, Inc. While we believe that the information is accurate within the limits of the analytical methods employed and is complete to the extent of the specific analyses performed, we make no warranty or representation as to the suitability of the use of the information for any purpose. The information is offered with the understanding that any use of the information is at the sole discretion and risk of the user. In no event shall the liability of Praxair Distribution, Inc., arising out of the use of the information contained herein exceed the fee established for providing such information.

PRAXAIR

Praxair
5700 South Alameda Street
Los Angeles, CA 90058
Telephone: (323) 585-2154
Facsimile: (714) 542-6689

DocNumber: 000040325

CERTIFICATE OF ANALYSIS / EPA PROTOCOL GAS

Customer & Order Information:

WELCO CGI GAS TECH LLC GAS
PO BOX 1377
DES MOINES IA 503050

Praxair Order Number: 20728094
Customer P. O. Number: 3708404-MAINE
Customer Reference Number:

Fill Date: 6/27/2012
Part Number: AI ME500E-AS
Lot Number: 109217905
Cylinder Style & Outlet: AS CGA 590
Cylinder Pressure & Volume: 2000 psig 140 cu. ft.

Certified Concentration:

Expiration Date:	7/10/2015		NIST Traceable
Cylinder Number:	CC72704		Analytical Uncertainty:
504	ppm	METHANE	± 2 %
	Balance	AIR	

Certification Information: *Certification Date:* 7/10/2012 *Term:* 36 Months *Expiration Date:* 7/10/2015

This cylinder was certified according to the 1997 EPA Traceability Protocol, Document #EPA-600/R-97/121, using Procedure G2

Do Not Use this Standard if Pressure is less than 150 PSIG

G2 analysis was done using STEC-INC SGD-710c @ 40% (cf=0.4). PGVP I.D.# F22012

Analytical Data: *(R=Reference Standard, Z=Zero Gas, C=Gas Candidate)*

1. Component: METHANE

Requested Concentration: 500 ppm
Certified Concentration: 504 ppm
Instrument Used: HORIBA, FIA-510, 861135122
Analytical Method: Flame Ionization Detector
Last Multipoint Calibration: 6/11/2012

Reference Standard Type: GMIS
Ref. Std. Cylinder # : CC 8633
Ref Std. Conc: 229 ppm
Ref. Std. Traceable to SRM # : vs. 2761
SRM Sample # : 212-09-AL
SRM Cylinder # : SX-20000

First Analysis Data:						Date:	7/6/2012
Z:	0	R:	229	C:	202.4	Conc:	202
R:	229	Z:	0	C:	202.4	Conc:	202
Z:	0	C:	200.8	R:	229	Conc:	201
UOM:	ppm			Mean Test Assay:			202 ppm

Second Analysis Data:						Date:	
Z:	0	R:	0	C:	0	Conc:	0
R:	0	Z:	0	C:	0	Conc:	0
Z:	0	C:	0	R:	0	Conc:	0
UOM:	ppm			Mean Test Assay:			0 ppm

Analyzed by: Shameela Jiffrey

Certified by: Ying Yu

Information contained herein has been prepared at your request by qualified experts within Praxair Distribution, Inc. While we believe that the information is accurate within the limits of the analytical methods employed and is complete to the extent of the specific analyses performed, we make no warranty or representation as to the suitability of the use of the information for any purpose. The information is offered with the understanding that any use of the information is at the sole discretion and risk of the user. In no event shall the liability of Praxair Distribution, Inc., arising out of the use of the information contained herein exceed the fee established for providing such information.

PRAXAIR

Praxair
5700 South Alameda Street
Los Angeles, CA 90058
Telephone: (323) 585-2154
Facsimile: (714) 542-6689

DocNumber: 000036571

CERTIFICATE OF ANALYSIS / EPA PROTOCOL GAS

Customer & Order Information:

WELCO CGI GAS TECH LLC GAS
PO BOX 1377
DES MOINES IA 503050

Praxair Order Number: 19725693
Customer P. O. Number: 3519338-MAINE
Customer Reference Number:

Fill Date: 3/27/2012
Part Number: EV AIME300ME-AS
Lot Number: 109208704
Cylinder Style & Outlet: AS CGA 590
Cylinder Pressure & Volume: 2000 psig 140 cu. ft.

Certified Concentration:

Expiration Date:	4/2/2015	NIST Traceable
Cylinder Number:	CC198791	Analytical Uncertainty:
290 ppm	METHANE	± 2 %
Balance	AIR	

Certification Information: *Certification Date:* 4/2/2012 *Term:* 36 Months *Expiration Date:* 4/2/2015

This cylinder was certified according to the 1997 EPA Traceability Protocol, Document #EPA-600/R-97/121, using Procedure G2

Do Not Use this Standard if Pressure is less than 150 PSIG

G2 analysis was done using STEC INC SGD-710 @ 70% (c.f.=0.7)
PGVP I.D.# F22012

Analytical Data: *(R=Reference Standard, Z=Zero Gas, C=Gas Candidate)*

1. Component: METHANE

Requested Concentration: 300 ppm
Certified Concentration: 290 ppm
Instrument Used: HORIBA, FIA-510, 861136122
Analytical Method: Flame Ionization Detector
Last Multipoint Calibration: 3/11/2012

Reference Standard Type: GMIS
Ref. Std. Cylinder # : CC 8633
Ref. Std. Conc: 229 ppm
Ref. Std. Traceable to SRM # : vs. 2751
SRM Sample # : 212-08-AL
SRM Cylinder # : SX-20000

First Analysis Data:						Date:	4/2/2012
Z:	0	R:	229	C:	202.9	Conc:	203
R:	229	Z:	0	C:	203.1	Conc:	203
Z:	0	C:	202.6	R:	229	Conc:	203
UOM:	ppm			Mean Test Assay:			203 ppm

Second Analysis Data:						Date:	
Z:	0	R:	0	C:	0	Conc:	0
R:	0	Z:	0	C:	0	Conc:	0
Z:	0	C:	0	R:	0	Conc:	0
UOM:	ppm			Mean Test Assay:			0 ppm

Analyzed by: Rolonda Kaywood

Certified by: Shameela Jiffrey

Information contained herein has been prepared at your request by qualified experts within Praxair Distribution, Inc. While we believe that the information is accurate within the limits of the analytical methods employed and is complete to the extent of the specific analyses performed, we make no warranty or representation as to the suitability of the use of the information for any purpose. The information is offered with the understanding that any use of the information is at the sole discretion and risk of the user. In no event shall the liability of Praxair Distribution, Inc., arising out of the use of the information contained herein exceed the fee established for providing such information.

EASTMOUNT ENVIRONMENTAL SERVICES
Air Quality Specialists

PRESSURE TRANSDUCER CALIBRATION FORM

Ref. Manometer ID: 8" Manometer

Calibrated By: M. Bruni

Transducer ID: PT-1A

Calibration Date: 1-Oct-12

Transducer Scale: 5 inches

Percent of Transducer Scale	Ref. Manometer - Positive Leg (in. H2O)	Transducer- P1 (in. H2O)	Difference (in. H2O)	Difference as % of Transducer Scale	Status
10%	0.51	0.50	0.01	0.2	Pass
30%	1.50	1.52	0.02	0.4	Pass
60%	3.00	3.01	0.01	0.2	Pass
90%	4.50	4.49	0.01	0.2	Pass

Percent of Transducer Scale	Ref. Manometer - Negative Leg (in. H2O)	Transducer- P2 (in. H2O)	Difference (in. H2O)	Difference as % of Transducer Scale	Status
10%	0.51	0.52	0.01	0.2	Pass
30%	1.50	1.49	0.01	0.2	Pass
60%	3.00	3.01	0.01	0.2	Pass
90%	4.50	4.49	0.01	0.2	Pass

Calibration Criteria: Reference Device and Transducer must agree within 2.0% of full transducer scale, or 0.02 inches H2O, whichever is less restrictive.

EASTMOUNT ENVIRONMENTAL SERVICES
Air Quality Specialists

Pitot Calibration Sheet

Technician:	Mike Bruni	Pitot ID:	S-2-1
Date Calibrated:	11/26/2012	Probe ID:	S-2-1
Next Due Cal Date:	11/26/2013		

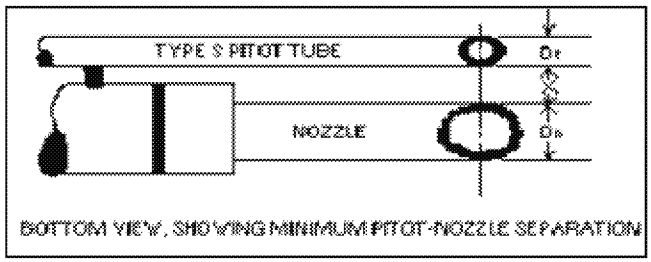

0.193	Dt (between 0.188 and 0.375 in.)
N/A	X (greater than or equal to 3/4 in.)
N/A	Dn (must use 1/2 in. nozzle)

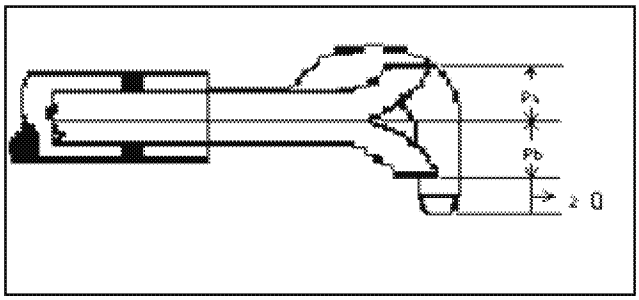

0.238	Pa	Pa must = Pb
0.238	Pb	
1.231	P(a) (Must be between 1.05 and 1.5 Dt)	
1.231	P(b) (Must be between 1.05 and 1.5 Dt)	

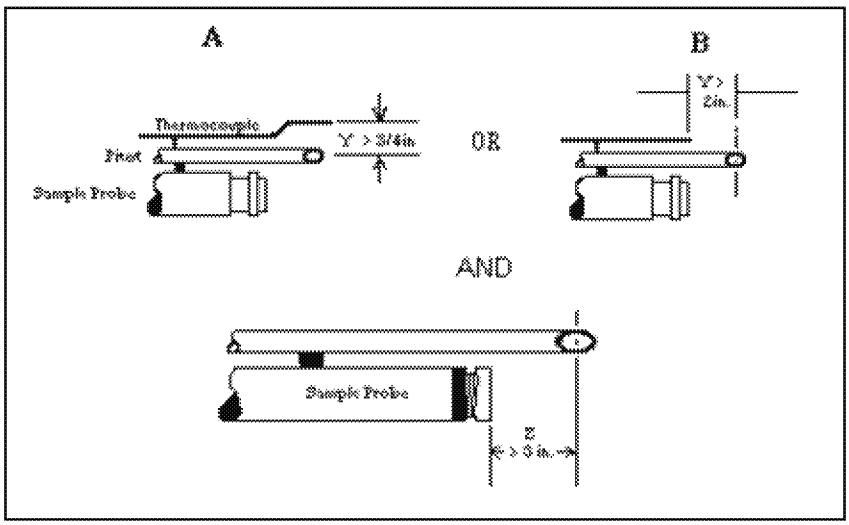

A
N/A Y (must be > 3/4in.)

or

B
N/A Y (must be > 2in.)

N/A Z (must be > 3in.)

* All calibrations are in accordance with CFR Pt.60, App.A, Meth.2, sect4.1.2 (Type S Pitot Calibration)

2 NEW PASTURE ROAD UNIT 5 NEWBURYPORT, MA 01950
TEL: 978.499.9300 FAX: 978.499.9303 E-MAIL: INFO@EASTMOUNT.COM WWW.EASTMOUNT.COM

EASTMOUNT ENVIRONMENTAL SERVICES
Air Quality Specialists

Pitot Calibration Sheet

Technician:	Mike Bruni	Pitot ID:	S-2-1
Date Calibrated:	11/26/2012	Probe ID:	S-2-1
Next Due Cal Date:	11/26/2013		

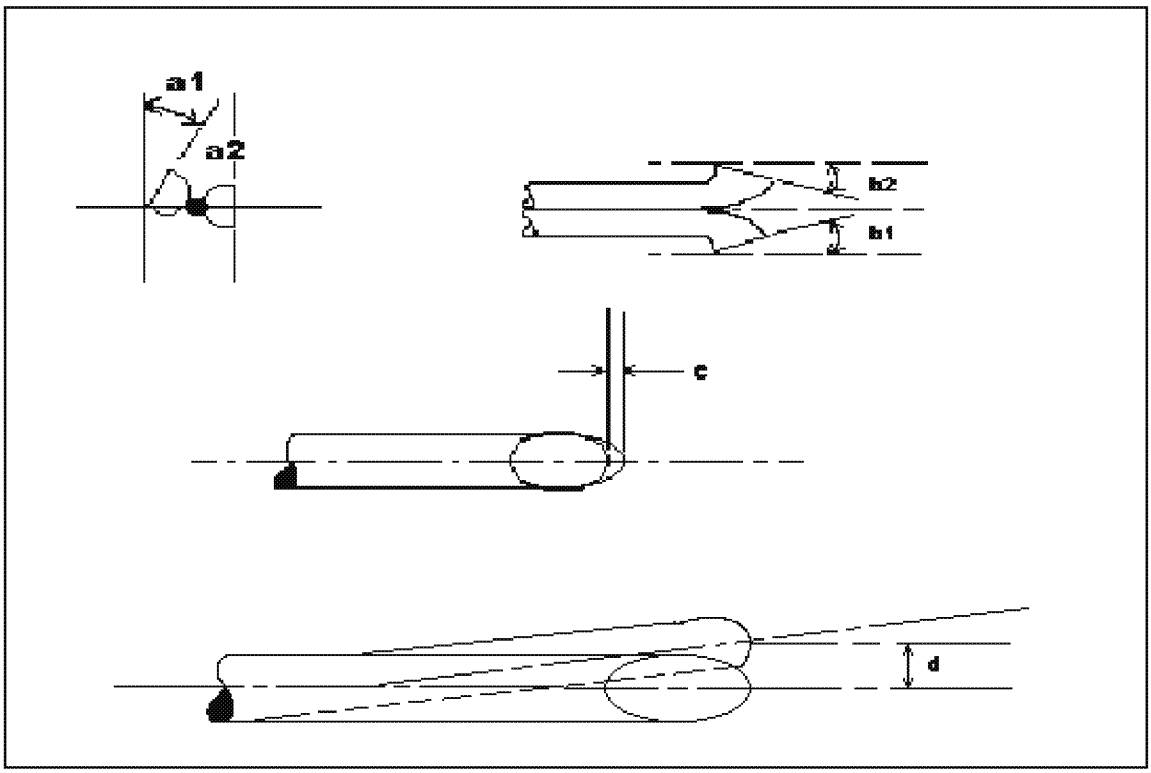

Degrees		Inches		
0	a1			a1 and a2 must be < 10 degrees
1	a2			
0	b1			b1 and b2 must be < 5 degrees
0	b2			
1	α	0.008	c	c must be < 0.125 in. (1/8in.) where: c = (Pa+Pb) x sin α
1	Θ	0.00829	d	d must be < 0.03125 in (1/32in) where: d = (Pa + Pb) x sin Θ

2 NEW PASTURE ROAD UNIT 5 NEWBURYPORT, MA 01950
TEL: 978.499.9300 FAX: 978.499.9303 E-MAIL: INFO@EASTMOUNT.COM WWW.EASTMOUNT.COM

EASTMOUNT ENVIRONMENTAL SERVICES
Air Quality Specialists

Thermocouple Calibration

TC ID:	TC P-2-1	**Cal Date:**	6/1/2012	**Reference Type:**	Mercury in Glass
Tech.:	A. Stratton	**Exp Date:**	6/1/2013	**Reference Cert. No.:**	ASTM-3

Ice Bath (32°F)

	Ref Temp (T_R)	TC Temp (T_T)	% Error
Run 1	33	33	0.00%
Run 2	33	33	0.00%
Run 3	33	33	0.00%
		Pass/Fail	**PASS**

Ambient (~70°F)

	Ref Temp (T_R)	TC Temp (T_T)	% Error
Run 1	70	71	-0.29%
Run 2	70	71	-0.29%
Run 3	70	71	-0.29%
		Pass/Fail	**PASS**

Boiling Water (~212°F)

	Ref Temp (T_R)	TC Temp (T_T)	% Error
Run 1	212	214	-0.41%
Run 2	212	214	-0.41%
Run 2	212	214	-0.41%
		Pass/Fail	**PASS**

Test Pass/Fail **PASS**

Calibration tolerance for each run is 1.5%.
% Error = $(((T_R + 273) - (T_T + 273)) / (T_R + 273)) \cdot 100$
Calibration conducted in accordance with EPA Method 2, Section 10.3.