REVISIONS				
ZONE	REV	DESCRIPTION	DATE	APPROVED

Hot Rolled Steel
Angle Rings
Material is 22gauge
Galvanized Steel

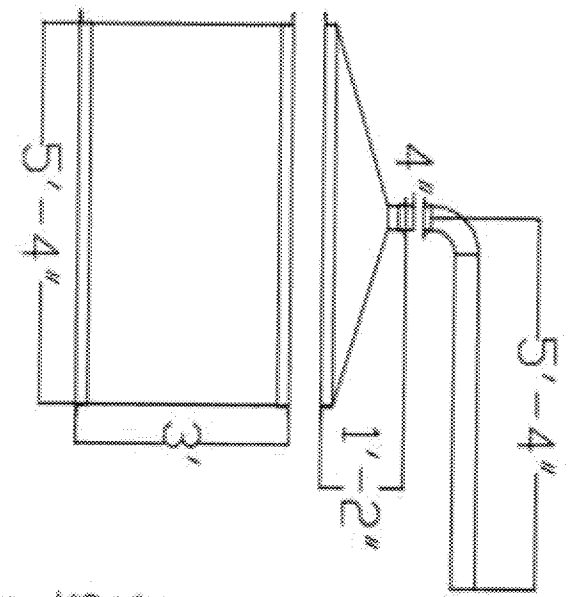

1. NEED FAN TO SUPPLY APPROX 100 CFM X-PROOF
120 V SINGLE PHASE
2. TRY NOT TO PULL VAC ON TANK
3. NEGITIVE PRESSURE
4. TANK 3 TIE BOTH VENTS TOGETHER - TEE INTO 1 SAMPLE DUCT.
5. FAN AT END OF SAMPLE DUCT.
6. DUCT LGR = 10 x DIA. (10")
7. NEED 220 V SINGLE PHASE TO TEST TRAILER

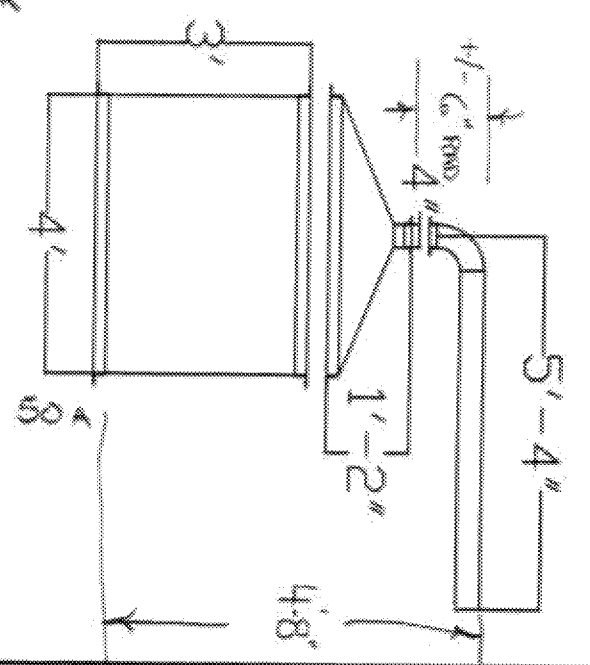

HALEY'S METAL SHOP, INC.
539 ELM STREET
BIDDEFORD, MAINE 04005
PH:207-284-8571
FAX:207-284-9597
WWW.HALEYSMETAL.COM

Global Petroleum Corp.
1 Clark Road
South Portland, Maine

SCALE: NTS	DATE: 01/12/12	SHEET 1 of 1

Haley's
Metal Shop, Inc.
"Since 1917"

539 Lim Street • Biddeford, Maine 04005
(207) 284-5571 • Fax (207) 284-9897

DATE OF PROPOSAL
1-12-12
PROPOSAL SUBMITTED TO:
Global Petroleum Corp.
1 Clark Road
South Portland, Maine 04106
PROJECT NAME
Global Oil – Collection Hoods

We are pleased to submit our proposal to fabricate two 22 gauge galvanized collection hoods with 4" duct connection per attached drawing. There will be one 64" diameter hood and one 48" diameter hood; both hoods will be in three sections. The sections will have angle iron flanges so that they can be bolted together in the field. Each hood will have four 12" x 12" base plates that bolt to the bottom angle iron flange.

All work is to be performed during regular business hours.

Exclusions: Delivery and Installation.

Project scope: Anything not explicitly included in this proposal is to be considered beyond the scope of this proposal. We will confirm any additional charges with you before performing work that is beyond the scope of this proposal. If an element of the proposal has been omitted from this proposal, please advise prior to accepting so that we may amend our proposal.

We propose to furnish the material and labor, as specified herein, for the sum of: $_____ plus Maine Sales Tax.

Payment terms; Upon approved credit, net 30 days.

Thank you for the opportunity to present this proposal. Please do not hesitate to call me should you have any questions.

Authorized Signature: _____Jim McGovern_____
Sales/Estimator

Note: This proposal is valid for acceptance within 30 days from the date of this proposal.

Acceptance of Proposal
Authorized Signature: _____ Date: _____

ED_002592A_00000099-00002