parameter. The next assessment of compliance will occur after the next sample is collected. If only a single sample is collected during a given 180-day period and the analytical result for that sample exceeds the six-month median, the Discharger will be considered out of compliance for the 180-day period. For any 180-period during which no sample is collected, no compliance determination can be made for the six-month median effluent limitation.

I. Annual Average Effluent Limitation

If the annual average of monthly discharges over a calendar year exceeds the annual average effluent limitation for a given parameter, a potential violation will be flagged and the Discharger will be considered out of compliance for each month of that year for that parameter. A potential violation of the annual average effluent limitation will be considered one violation for assessing State mandatory minimum penalties. If no sample (daily discharge) is collected over a calendar year, no compliance determination can be made for that year with respect to effluent violation determination, but compliance determination can be made for that month with respect to reporting violation determination.

J. Chronic Toxicity

The discharge is subject to determination of "Pass" or "Fail" from a chronic toxicity test using the TST statistical t-test approach described in the *National Pollutant Discharge Elimination System Test of Significant Toxicity Implementation Document* (USEPA 833-R-10-003, 2010), Appendix A, Figure A-1, Table A-1, and Appendix B, Table B-1. The null hypothesis (Ho) for the TST statistical approach is: Mean discharge In-stream Waste Concentration (IWC) response ≤0.75. Mean control response. A test result that rejects this null hypothesis is reported as "Pass." A test result that does not reject this null hypothesis is reported as "Fail." This is a t-test (formally Student's t-test), a statistical analysis comparing two sets of replicate observations – in the case of a Whole Effluent Toxicity (WET) test, only two test concentrations (i.e. a control and IWC). The purpose of this statistical test is to determine if the means of the two sets of observations are different (i.e. if the IWC or receiving water concentration differs from the control (the test result is "Pass" or "Fail")). The Welch's t-test employed by the TST statistical approach is an adaptation of Student's t-test and is used with two samples having unequal variances.

The Maximum Daily Effluent Limitation (MDEL) for chronic toxicity is exceeded and a violation will be flagged when a chronic toxicity test, using the TST statistical approach, results in "Fail."

The chronic toxicity MDEL is set at the IWC for the discharge (0.73%) and expressed in units of the TST statistical approach ("Pass" or Fail"). All NPDES effluent compliance monitoring for the chronic toxicity MDEL shall be reported using only the IWC effluent concentration and negative control, expressed in units of the TST. The TST hypothesis (Ho) (see above) is statistically analyzed using the IWC and a negative control. Effluent toxicity tests shall be run using *Short-term Methods for Estimating the Chronic Toxicity of Effluents and Receiving Waters to West Coast Marine and Estuarine Organisms* (EPA/600/R-95/136, 1995). The Regional Water Board's review of reported toxicity test results will include review of concentration-response patterns as appropriate (see Fact Sheet discussion at V.C.6). As described in the laboratory audit directives to the San Jose Creek Water Quality Laboratory from the State Water Resources Control Board dated August 07, 2014, and from USEPA dated December 24, 2013, the Percent Minimum Significant Difference (PMSD) criteria only apply to compliance reporting for the No Observed Effect Concentration (NOEC) and the sublethal statistical endpoints of the NOEC, and therefore are not used to interpret TST results. Standard Operating Procedures used by the toxicity testing laboratory to identify and report valid, invalid, anomalous, or inconclusive effluent (and receiving water) toxicity test

ED_002551_00001589-00027

measurement results from the TST statistical approach, including those that incorporate a consideration of concentration-response patterns, must be submitted to the Regional Water Board (40 CFR § 122.41(h)). The Regional Water Board will make a final determination as to whether a toxicity test result is valid, and may consult with the Discharger, USEPA, the State Water Board's Quality Assurance Officer, or the State Water Board's Environmental Laboratory Accreditation Program as needed.

K. Percent Removal

The average monthly percent removal is the removal efficiency expressed in percentage across a treatment plant for a given pollutant parameter, as determined from the 30-day average values of pollutant concentrations (C in mg/L) of influent and effluent samples collected at about the same time using the following equation:

Percent Removal (%) = $[1-(C_{Effluent}/C_{Influent})] \times 100$ %

When preferred, the Discharger may substitute mass loadings and mass emissions for the concentrations.

L. Mass and Concentration Limitations

Compliance with mass and concentration effluent limitations for the same parameter shall be determined separately with their respective limitations. When the concentration of a constituent in an effluent sample is determined to be ND or DNQ, the corresponding mass emission rate determined from that sample concentration shall also be reported as ND or DNQ.

M. Compliance with Single Constituent Effluent Limitations

Dischargers may be considered out of compliance with the effluent limitation if the concentration of the pollutant (see section B "Multiple Sample Data Reduction" above) in the monitoring sample is greater than the effluent limitation and greater than or equal to the ML or RL.

N. Compliance with effluent limitations expressed as a sum of several constituents

Dischargers are out of compliance with an effluent limitation which applies to the sum of a group of chemicals (e.g., PCB's) if the sum of the individual pollutant concentrations is greater than the effluent limitation. Individual pollutants of the group will be considered to have a concentration of zero if the constituent is reported as ND or DNQ.

O. Compliance with Total Maximum Daily Loads

The NPDES regulations at 40 CFR § 122.44(d)(1)(vii)(B) require that NPDES permits include effluent limitations developed consistent with the assumptions and requirements of any WLA that has been assigned to the discharge as part of an approved TMDL. There are currently no WLAs assigned to SCI WWTP.

P. Mass Emission Rate

The mass emission rate shall be obtained from the following calculation for any calendar day:

$$\text{Mass emission rate (lbs/day)} = \frac{8.34}{N}\sum_{i=1}^{N} Q_i C_i$$

$$\text{Mass emission rate (kg/day)} = \frac{3.79}{N}\sum_{i=1}^{N} Q_i C_i$$

REVISED TENTATIVE

in which 'N' is the number of samples analyzed in any calendar day. 'Q_i' and 'C_i' are the flow rate (mgd) and the constituent concentration (mg/L), respectively, which are associated with each of the 'N' grab samples, which may be collected on any calendar day. If a composite sample is taken, 'C_i' is the concentration measured in the composite sample and 'Q_i' is the average flow rate occurring during the period over which samples are composited.

The daily concentration of all constituents shall be determined from the flow-weighted average of the same constituents in the combined waste streams as follows:

$$\text{Daily concentration} = \frac{1}{Q_t}\sum_{i=1}^{N} Q_i C_i$$

in which 'N' is the number of component waste streams. 'Q_i' and 'C_i' are the flow rate (mgd) and the constituent concentration (mg/L), respectively, which are associated with each of the 'N' waste streams. 'Q_t' is the total flow rate of the combined waste streams.

Q. Bacterial Standards and Analysis

1. The geometric mean used for determining compliance with bacterial standards is calculated with the following equation:

$$\text{Geometric Mean} = (C_1 \times C_2 \times \ldots \times C_3)^{1/n}$$

where n is the number of days samples were collected during the period and C is the concentration of bacteria (MPN/100 mL or CFU/100 mL) found on each day of sampling.

2. For bacterial analyses, sample dilutions should be performed so the expected range of values is bracketed (for example, with multiple tube fermentation method or membrane filtration method, 2 to 16,000 per 100 mL for total and fecal coliform, at a minimum, and 1 to 1000 per 100 mL for *Enterococcus*). The detection methods used for each analysis shall be reported with the results of the analyses.

3. Detection methods used for coliforms (total and fecal) shall be those presented in Table 1A of 40 CFR § 136, unless alternate methods have been approved by USEPA pursuant to 40 CFR § 136, or improved methods have been determined by the Executive Officer and/or USEPA.

4. Detection methods used for *Enterococcus* shall be those presented in Table 1A of 40 CFR § 136 or in the USEPA publication EPA 600/4-85/076, *Test Methods for* Escherichia coli *and* Enterococci *in Water By Membrane Filter Procedure* or any improved method determined by the Executive Officer and/or USEPA to be appropriate.

R. Single Operational Upset (SOU)

A SOU that leads to simultaneous violations of more than one pollutant parameter shall be treated as a single violation and limits the Discharger's liability in accordance with the following conditions:

1. A SOU is broadly defined as a single unusual event that temporarily disrupts the usually satisfactory operation of a system in such a way that it results in violation of multiple pollutant parameters.

2. A Discharger may assert SOU to limit liability only for those violations which the Discharger submitted notice of the upset as required in Provision V.E.2 (b) of Attachment D – Standard Provisions.

3. For purpose outside of CWC section 13385 subdivisions (h) and (i), determination of compliance and civil liability (including any more specific definition of SOU, the

REVISED TENTATIVE

ED_002551_00001589-00029

requirements for Dischargers to assert the SOU limitation of liability, and the manner of counting violations) shall be in accordance with USEPA Memorandum "Issuance of Guidance Interpreting Single Operational Upset" (September 27, 1989).

4. For purpose of CWC section 13385 (h) and (i), determination of compliance and civil liability (including any more specific definition of SOU, the requirements for Dischargers to assert the SOU limitation of liability, and the manner of counting violations) shall be in accordance with CWC section 13385 (f)(2).

REVISED TENTATIVE

ED_002551_00001589-00030

ATTACHMENT A – DEFINITIONS

Arithmetic Mean (μ)
Also called the average, is the sum of measured values divided by the number of samples. For ambient water concentrations, the arithmetic mean is calculated as follows:

Arithmetic mean = $\mu = \Sigma x / n$ where: Σx is the sum of the measured ambient water concentrations, and n is the number of samples.

Areas of Special Biological Significance (ASBS)
Those areas designated by the State Water Resources Control Board (State Water Board) as ocean areas requiring protection of species or biological communities to the extent that alteration of natural water quality is undesirable. All Areas of Special Biological Significance are also classified as a subset of STATE WATER QUALITY PROTECTION AREAS.

Average Monthly Effluent Limitation (AMEL)
The highest allowable average of daily discharges over a calendar month, calculated as the sum of all daily discharges measured during a calendar month divided by the number of daily discharges measured during that month.

Average Weekly Effluent Limitation (AWEL)
The highest allowable average of daily discharges over a calendar week (Sunday through Saturday), calculated as the sum of all daily discharges measured during a calendar week divided by the number of daily discharges measured during that week.

Best Management Practice (BMP)
BMPs are schedules of activities, prohibitions of practices, maintenance procedures, and other management practices to prevent or reduce the pollution of waters of the United States. BMPs may include, but are not limited to treatment requirements, operating procedures, or practices to control plant site runoff, spillage or leaks, sludge or waste disposal, or drainage from raw material storage.

Bioaccumulative
Those substances taken up by an organism from its surrounding medium through gill membranes, epithelial tissue, or from food and subsequently concentrated and retained in the body of the organism.

Biosolids
Sewage sludge that has been treated and tested and shown to be capable of being beneficially and legally used pursuant to federal and state regulators as a soil amendment for agricultural, silvicultural, horticultural, and land reclamation activities as specified under 40 C.F.R. Part 503.

Carcinogenic
Pollutants are substances that are known to cause cancer in living organisms.

Chlordane
Shall mean the sum of chlordane-alpha, chlordane-gamma, chlordene-alpha, chlordene-gamma, nonachlor-alpha, nonachlor-gamma, and oxychlordane.

Coefficient of Variation (CV)
CV is a measure of the data variability and is calculated as the estimated standard deviation divided by the arithmetic mean of the observed values.

REVISED TENTATIVE

ED_002551_00001589-00031

Composite Sample, 24-hour
For flow rate measurements, the arithmetic mean of no fewer than eight individual measurements taken at equal intervals for 24 hours or for the duration of discharge, whichever is shorter.

Composite sample, for other than flow rate measurements:

a. No fewer than eight individual sample portions taken at equal time intervals for 24 hours. The volume of each individual sample portion shall be directly proportional to the discharge flow rate at the time of sampling; or,

b. No fewer than eight individual sample portions taken of equal time volume taken over a 24-hour period. The time interval between each individual sample portion shall vary such that the volume of the discharge between each individual sample portion remains constant.

The compositing period shall equal 24 hours.

The composite sample result shall be reported for the calendar day during which composite sampling ends.

Daily Discharge
Daily Discharge is defined as either: (1) the total mass of the constituent discharged over the calendar day (12:00 am through 11:59 pm) or any 24-hour period that reasonably represents a calendar day for purposes of sampling (as specified in the permit), for a constituent with limitations expressed in units of mass or; (2) the unweighted arithmetic mean measurement of the constituent over the day for a constituent with limitations expressed in other units of measurement (e.g., concentration).

The daily discharge may be determined by the analytical results of a composite sample taken over the course of one day (a calendar day or other 24-hour period defined as a day) or by the arithmetic mean of analytical results from one or more grab samples taken over the course of the day.

For composite sampling, if 1 day is defined as a 24-hour period other than a calendar day, the analytical result for the 24-hour period will be considered as the result for the calendar day in which the 24-hour period ends.

DDT
Shall mean the sum of 4,4'DDT, 2,4'DDT, 4,4'DDE, 2,4'DDE, 4,4'DDD, and 2,4'DDD.

Degrade
Degradation shall be determined by comparison of the waste field and reference site(s) for characteristic species diversity, population density, contamination, growth anomalies, debility, or supplanting of normal species by undesirable plant and animal species. Degradation occurs if there are significant differences in any of three major biotic groups, namely, demersal fish, benthic invertebrates, or attached algae. Other groups may be evaluated where benthic species are not affected, or are not the only ones affected.

Detected, but Not Quantified (DNQ)
Sample results that are less than the reported Minimum Level, but greater than or equal to the laboratory's MDL. Sample results reported as DNQ are estimated concentrations.

Dichlorobenzenes
Shall mean the sum of 1,2- and 1,3-dichlorobenzene.

Dilution Credit
Dilution Credit is the amount of dilution granted to a discharge in the calculation of a water quality-based effluent limitation, based on the allowance of a specified mixing zone. It is calculated from the

REVISED TENTATIVE

ED_002551_00001589-00032

dilution ratio or determined through conducting a mixing zone study or modeling of the discharge and receiving water.

Downstream Ocean Waters
Waters downstream with respect to ocean currents.

Dredged Material
Any material excavated or dredged from the navigable waters of the United States, including material otherwise referred to as "spoil."

Enclosed Bays
Indentations along the coast that enclose an area of oceanic water within distinct headlands or harbor works. Enclosed bays include all bays where the narrowest distance between headlands or outermost harbor works is less than 75 percent of the greatest dimension of the enclosed portion of the bay. This definition includes but is not limited to: Humboldt Bay, Bodega Harbor, Tomales Bay, Drakes Estero, San Francisco Bay, Morro Bay, Los Angeles Harbor, Upper and Lower Newport Bay, Mission Bay, and San Diego Bay.

Endosulfan
The sum of endosulfan-alpha and -beta and endosulfan sulfate.

Estimated Chemical Concentration
The estimated chemical concentration that results from the confirmed detection of the substance by the analytical method below the ML value.

Estuaries and Coastal Lagoons
Waters at the mouths of streams that serve as mixing zones for fresh and ocean waters during a major portion of the year. Mouths of streams that are temporarily separated from the ocean by sandbars shall be considered as estuaries. Estuarine waters will generally be considered to extend from a bay or the open ocean to the upstream limit of tidal action but may be considered to extend seaward if significant mixing of fresh and salt water occurs in the open coastal waters. The waters described by this definition include but are not limited to the Sacramento-San Joaquin Delta as defined by Section 12220 of the California Water Code, Suisun Bay, Carquinez Strait downstream to Carquinez Bridge, and appropriate areas of the Smith, Klamath, Mad, Eel, Noyo, and Russian Rivers.

Federally-Owned Treatment Works (FOTW)
A facility that is owned and operated by a department, agency, or instrumentality of the Federal Government treating wastewater, a majority of which is domestic sewage, prior to discharge (42 U.S. Code § 6939e(d)).

Grab Sample
An individual sample collected during a period of time not to exceed 15 minutes. Grab samples shall be collected during normal peak loading conditions for the parameter of interest, which may or may not occur during hydraulic peaks.

Halomethanes
The sum of bromoform, bromomethane (methyl bromide) and chloromethane (methyl chloride).

HCH
The sum of the alpha, beta, gamma (lindane) and delta isomers of hexachlorocyclohexane.

REVISED TENTATIVE

ED_002551_00001589-00033

Initial Dilution
The process that results in the rapid and irreversible turbulent mixing of wastewater with ocean water around the point of discharge.

For a submerged buoyant discharge, characteristic of most municipal and industrial wastes that are released from the submarine outfalls, the momentum of the discharge and its initial buoyancy act together to produce turbulent mixing. Initial dilution in this case is completed when the diluting wastewater ceases to rise in the water column and first begins to spread horizontally.

For shallow water submerged discharges, surface discharges, and non-buoyant discharges, characteristic of cooling water wastes and some individual discharges, turbulent mixing results primarily from the momentum of discharge. Initial dilution, in these cases, is considered to be completed when the momentum induced velocity of the discharge ceases to produce significant mixing of the waste, or the diluting plume reaches a fixed distance from the discharge to be specified by the Regional Water Board, whichever results in the lower estimate for initial dilution.

Instantaneous Maximum Effluent Limitation
The highest allowable value for any single grab sample or aliquot (i.e., each grab sample or aliquot is independently compared to the instantaneous maximum limitation).

Instantaneous Minimum Effluent Limitation
The lowest allowable value for any single grab sample or aliquot (i.e., each grab sample or aliquot is independently compared to the instantaneous minimum limitation).

In-stream Waste Concentration (IWC)
The concentration of a toxicant or the parameter toxicity in the receiving water after mixing.

Kelp Beds
For purposes of the bacteriological standards of the Ocean Plan, are significant aggregations of marine algae of the genera *Macrocystis* and *Nereocystis*. Kelp beds include the total foliage canopy of *Macrocystis* and *Nereocystis* plants throughout the water column.

Mariculture
The culture of plants and animals in marine waters independent of any pollution source.

Material
(a) In common usage: (1) the substance or substances of which a thing is made or composed (2) substantial; (b) For purposes of the Ocean Plan relating to waste disposal, dredging and the disposal of dredged material and fill, MATERIAL means matter of any kind or description which is subject to regulation as waste, or any material dredged from the navigable waters of the United States. See also, DREDGED MATERIAL.

Maximum Daily Effluent Limitation (MDEL)
The highest allowable daily discharge of a pollutant, over a calendar day (or 24-hour period). For pollutants with limitations expressed in units of mass, the daily discharge is calculated as the total mass of the pollutant discharged over the day. For pollutants with limitations expressed in other units of measurement, the daily discharge is calculated as the arithmetic mean measurement of the pollutant over the day.

Median
The middle measurement in a set of data. The median of a set of data is found by first arranging the measurements in order of magnitude (either increasing or decreasing order). If the number of

ED_002551_00001589-00034

measurements (n) is odd, then the median = $X_{(n+1)/2}$. If n is even, then the median = $(X_{n/2} + X_{(n/2)+1})/2$ (i.e., the midpoint between the n/2 and n/2+1).

Method Detection Limit (MDL)
The minimum concentration of a substance that can be reported with 99 percent confidence that the measured concentration is distinguishable from method blank results, as defined in 40 C.F.R. part 136, Attachment B.

Minimum Level (ML)
The concentration at which the entire analytical system must give a recognizable signal and acceptable calibration point. The ML is the concentration in a sample that is equivalent to the concentration of the lowest calibration standard analyzed by a specific analytical procedure, assuming that all the method specified sample weights, volumes, and processing steps have been followed.

Natural Light
Reduction of natural light may be determined by the Regional Water Board by measurement of light transmissivity or total irradiance, or both, according to the monitoring needs of the Regional Water Board.

Not Detected (ND)
Those sample results less than the laboratory's MDL.

Ocean Waters
The territorial marine waters of the state as defined by California law to the extent these waters are outside of enclosed bays, estuaries, and coastal lagoons. If a discharge outside the territorial waters of the state could affect the quality of the waters of the state, the discharge may be regulated to assure no violation of the Ocean Plan will occur in ocean waters.

PAHs (polynuclear aromatic hydrocarbons)
The sum of acenaphthylene, anthracene, 1,2-benzanthracene, 3,4-benzofluoranthene, benzo[k]fluoranthene, 1,12-benzoperylene, benzo[a]pyrene, chrysene, dibenzo[ah]anthracene, fluorene, indeno[1,2,3-cd] pyrene, phenanthrene and pyrene.

PCBs (polychlorinated biphenyls) as Aroclors
The sum of chlorinated biphenyls whose analytical characteristics resemble those of Aroclor-1016, Aroclor-1221, Aroclor-1232, Aroclor-1242, Aroclor-1248, Aroclor-1254 and Aroclor-1260.

PCBs as Congeners
The sum of the following 41 individually quantified PCB congeners or mixtures of isomers of a single congener in a co-elution: PCB-18, 28, 37, 44, 49, 52, 66, 70, 74, 77, 81, 87, 99, 101, 105, 110, 114, 118, 119, 123, 126, 128, 138, 149, 151, 153, 156, 157, 158, 167, 168, 169, 170, 177, 180, 183, 187, 189, 194, 201, and 206.

Persistent Pollutants
Persistent pollutants are substances for which degradation or decomposition in the environment is nonexistent or very slow.

Phenolic Compounds (chlorinated)
The sum of 2-chlorophenol, 2,4-dichlorophenol, 4-chloro-3-methylphenol, 2,4,6-trichlorophenol, and pentachlorophenol.

REVISED TENTATIVE

ED_002551_00001589-00035

Phenolic Compounds (non-chlorinated)
The sum of 2,4-dimethylphenol, 2-nitrophenol, 4-nitrophenol, 2,4-dinitrophenol, 4,6-dinitro-2-methylphenol, and phenol.

Pollutant Minimization Program (PMP)
PMP means waste minimization and pollution prevention actions that include, but are not limited to, product substitution, waste stream recycling, alternative waste management methods, and education of the public and businesses. The goal of the PMP shall be to reduce all potential sources of Ocean Plan Table 1 pollutants through pollutant minimization (control) strategies, including pollution prevention measures as appropriate, to maintain the effluent concentration at or below the water quality-based effluent limitation. Pollution prevention measures may be particularly appropriate for persistent bioaccumulative priority pollutants where there is evidence that beneficial uses are being impacted. The Regional Water Board may consider cost effectiveness when establishing the requirements of a PMP. The completion and implementation of a Pollution Prevention Plan, if required pursuant to Water Code section 13263.3(d), shall be considered to fulfill the PMP requirements.

Pollution Prevention
Any action that causes a net reduction in the use or generation of a hazardous substance or other pollutant that is discharged into water and includes, but is not limited to, input change, operational improvement, production process change, and product reformulation (as defined in CWC section 13263.3). Pollution prevention does not include actions that merely shift a pollutant in wastewater from one environmental medium to another environmental medium, unless clear environmental benefits of such an approach are identified to the satisfaction of the State Water Resources Control Board (State Water Board), Regional Water Board, or USEPA.

Publicly Owned Treatment Works
A treatment works as defined by section 212 of the CWA, which is owned by a State or municipality (as defined by section 502(4) of the Act). This definition includes any devices and systems used in the storage, treatment, recycling and reclamation of municipal sewage or industrial wastes of a liquid nature. It also includes sewers, pipes and other conveyances only if they convey wastewater to a POTW Treatment Plant. The term also means the municipality which has jurisdiction over the Indirect Discharges to and the discharges from such treatment works. (40 CFR § 403.3(q).)

Reported Minimum Level
The reported ML (also known as the Reporting Level or RL) is the ML (and its associated analytical method) chosen by the Discharger for reporting and compliance determination from the MLs included in this Order, including an additional factor if applicable as discussed herein. The MLs included in this Order correspond to approved analytical methods for reporting a sample result that are selected by the Regional Water Board either from Appendix II of the Ocean Plan in accordance with section III.C.5.a. of the Ocean Plan or established in accordance with section III.C.5.b. of the Ocean Plan. The ML is based on the proper application of method-based analytical procedures for sample preparation and the absence of any matrix interferences. Other factors may be applied to the ML depending on the specific sample preparation steps employed. For example, the treatment typically applied in cases where there are matrix-effects is to dilute the sample or sample aliquot by a factor of ten. In such cases, this additional factor must be applied to the ML in the computation of the reported ML.

Satellite Collection System
The portion, if any, of a sanitary sewer system owned or operated by a different public agency than the agency that owns and operates the wastewater treatment facility that a sanitary sewer system is tributary to.

PRESENTATIVE

ED_002551_00001589-00036

Shellfish
Organisms identified by the California Department of Health Services as shellfish for public health purposes (i.e., mussels, clams and oysters).

Significant Difference
Defined as a statistically significant difference in the means of two distributions of sampling results at the 95 percent confidence level.

Six-Month Median Effluent Limitation
The highest allowable moving median of all daily discharges for any 180-day period.

Standard Deviation (σ)
Standard Deviation is a measure of variability that is calculated as follows:

$$\sigma = (\sum[(x - \mu)^2]/(n - 1))^{0.5}$$

where:
x is the observed value;
μ is the arithmetic mean of the observed values; and
n is the number of samples.

State Water Quality Protection Areas (SWQPAs)
Non-terrestrial marine or estuarine areas designated to protect marine species or biological communities from an undesirable alteration in natural water quality. All AREAS OF SPECIAL BIOLOGICAL SIGNIFICANCE (ASBS) that were previously designated by the State Water Board in Resolutions 74-28, 74-32, and 75-61 are now also classified as a subset of State Water Quality Protection Areas and require special protections afforded by the Ocean Plan.

TCDD Equivalents
The sum of the concentrations of chlorinated dibenzodioxins (2,3,7,8-CDDs) and chlorinated dibenzofurans (2,3,7,8-CDFs) multiplied by their respective toxicity factors, as shown in the table below.

Isomer Group	Toxicity Equivalence Factor
2,3,7,8-tetra CDD	1.0
2,3,7,8-penta CDD	0.5
2,3,7,8-hexa CDDs	0.1
2,3,7,8-hepta CDD	0.01
octa CDD	0.001
2,3,7,8 tetra CDF	0.1
1,2,3,7,8 penta CDF	0.05
2,3,4,7,8 penta CDF	0.5
2,3,7,8 hexa CDFs	0.1
2,3,7,8 hepta CDFs	0.01
octa CDF	0.001

Test of Significant Toxicity (TST)
A statistical approach used to analyze toxicity test data. The TST incorporates a restated null hypothesis, Welch's t-test, and the biological effect thresholds for chronic and acute toxicity.

REVISED TENTATIVE

ED_002551_00001589-00037

Toxicity Identification Evaluation (TIE)
Set of procedures to identify the specific chemical(s) responsible for toxicity. These procedures are performed in three phases (characterization, identification, and confirmation) using aquatic organism toxicity tests.

Toxicity Reduction Evaluation (TRE)
A study conducted in a step-wise process designed to identify the causative agents of effluent or ambient toxicity, isolate the sources of toxicity, evaluate the effectiveness of toxicity control options, and then confirm the reduction in toxicity. The first steps of the TRE consist of the collection of data relevant to the toxicity, including additional toxicity testing, and an evaluation of facility operations and maintenance practices, and best management practices. A Toxicity Identification Evaluation (TIE) may be required as part of the TRE, if appropriate.

Trash
All improperly discarded solid material from any production, manufacturing, or processing operation including, but not limited to, products, product packaging, or containers constructed of plastic, steel, aluminum, glass, paper, or other synthetic natural materials.

Waste
As used in the Ocean Plan, waste includes a Discharger's total discharge, of whatever origin, i.e., gross, not net, discharge.

Water Recycling
The treatment of wastewater to render it suitable for reuse, the transportation of treated wastewater to the place of use, and the actual use of treated wastewater for a direct beneficial use or controlled use that would not otherwise occur.

REVISED TENTATIVE

ED_002551_00001589-00038

ATTACHMENT B-1 – MAP OF SAN CLEMENTE ISLAND LOCATION

Location Map for NALF San Clemente Island

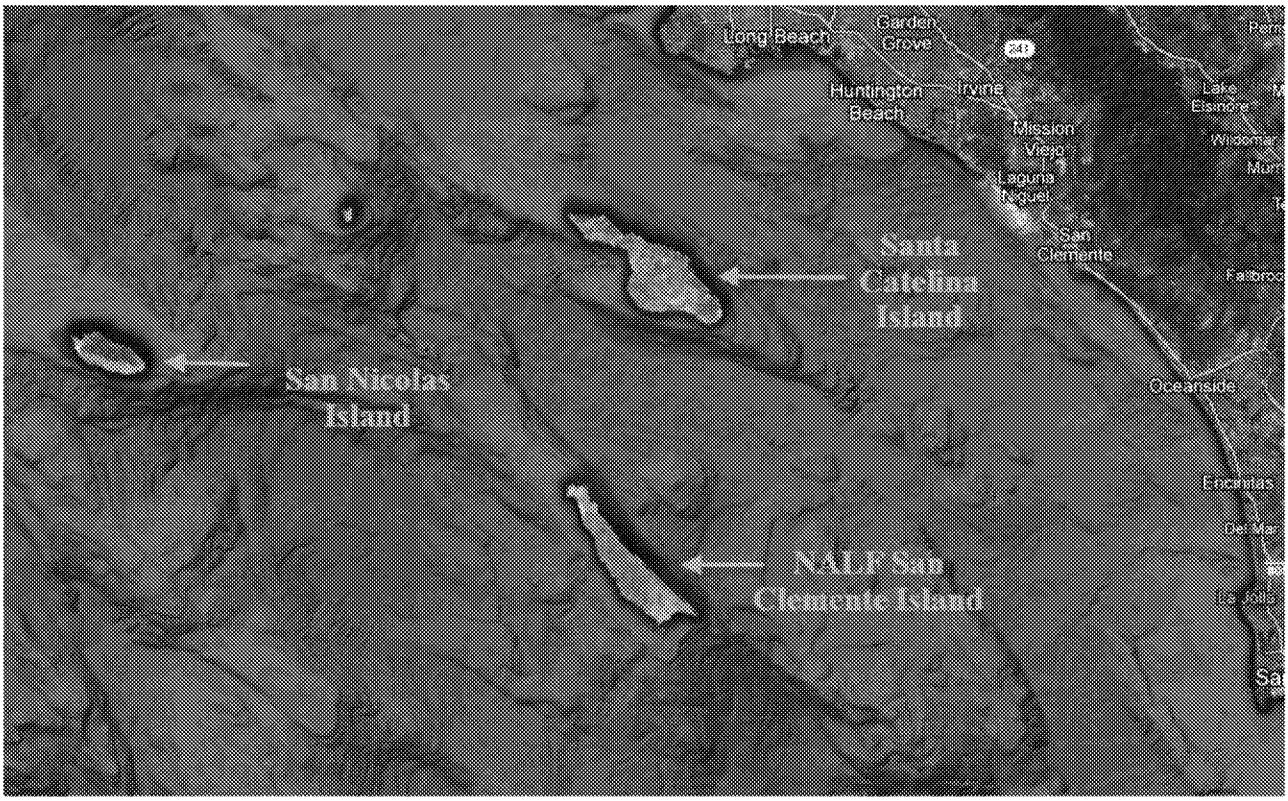

REVISE

ATTACHMENT B-2 – SAN CLEMENTE ISLAND WATER SYSTEM

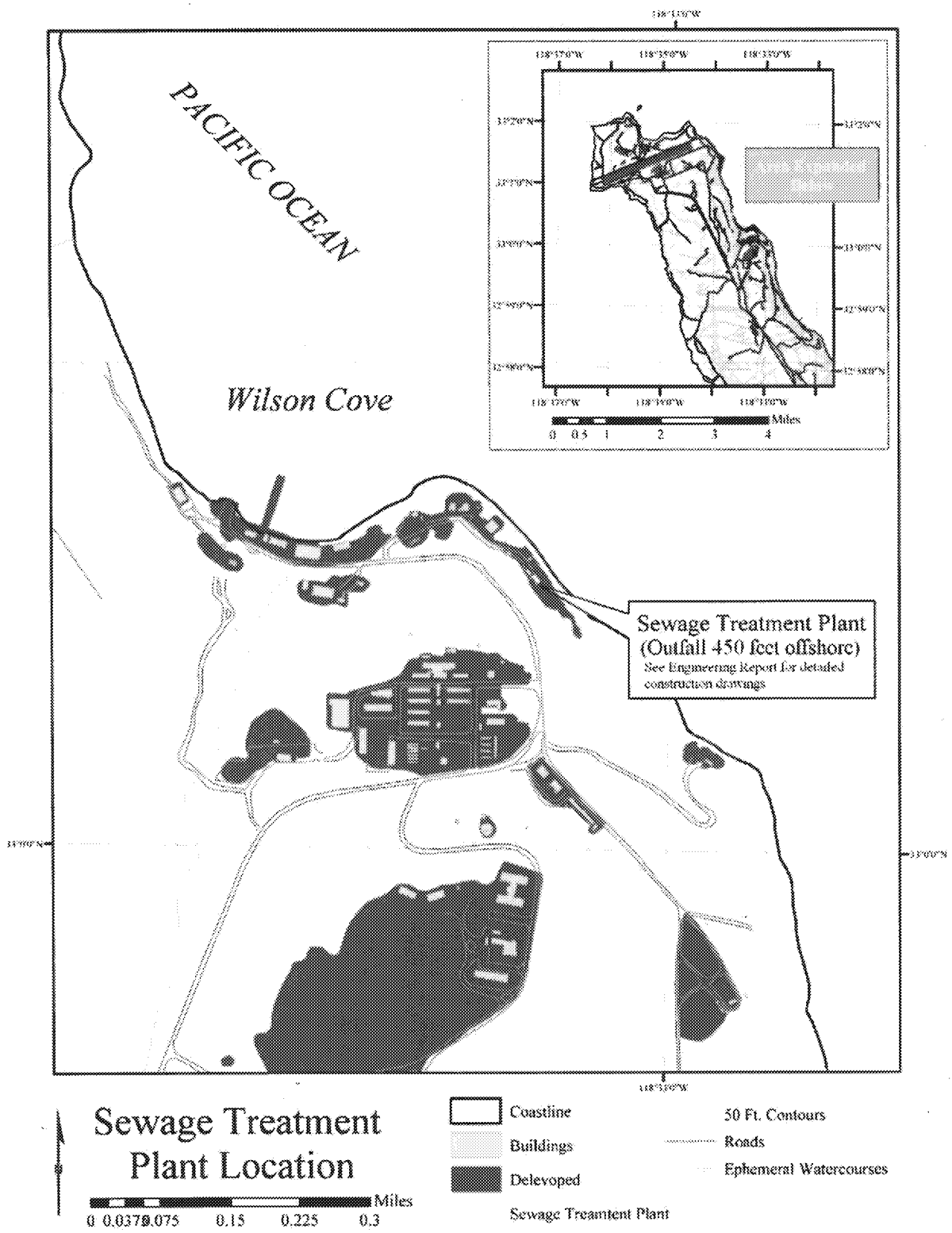

ATTACHMENT C – FLOW SCHEMATIC PART 1

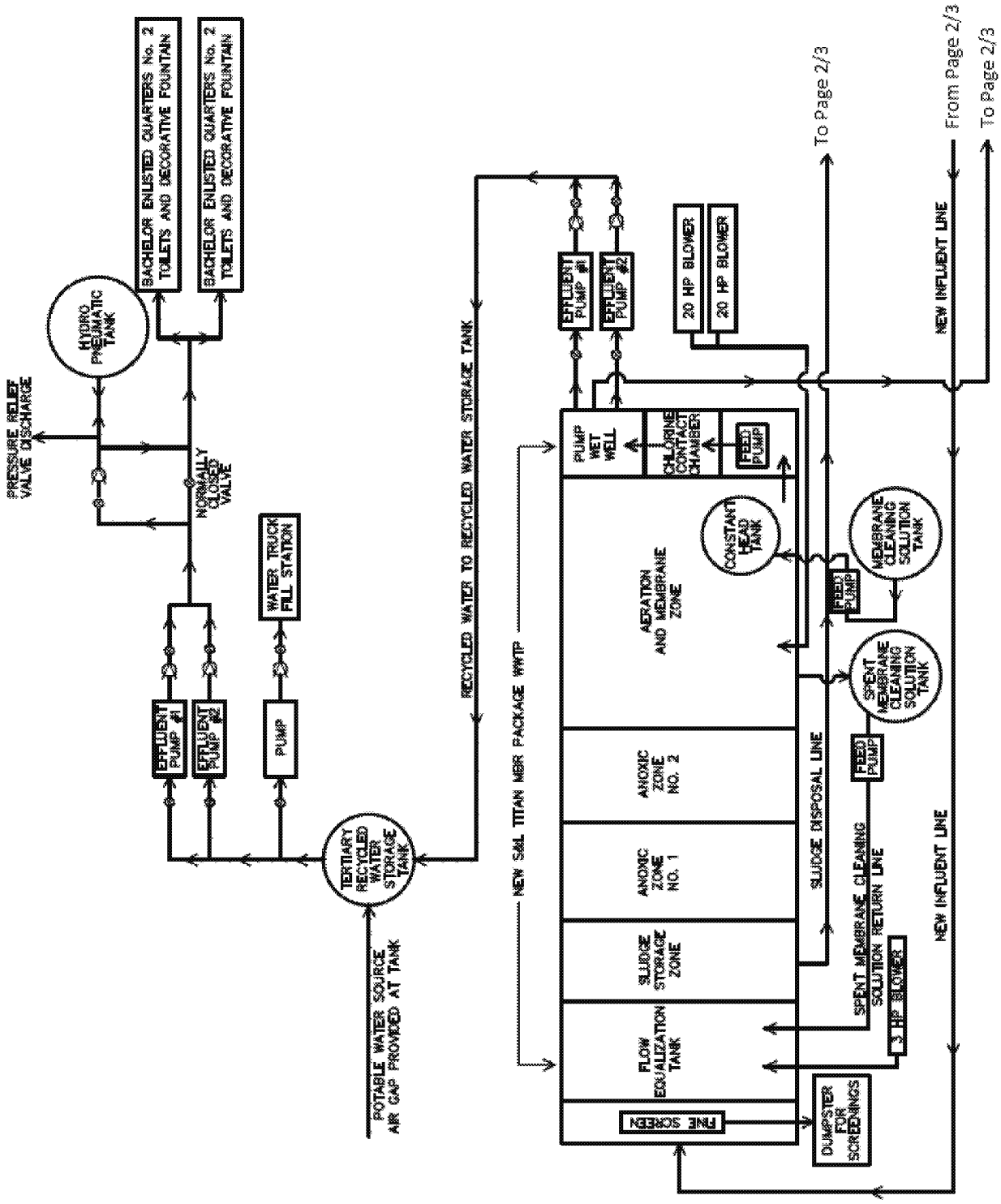

ATTACHMENT C – FLOW SCHEMATIC PART 2

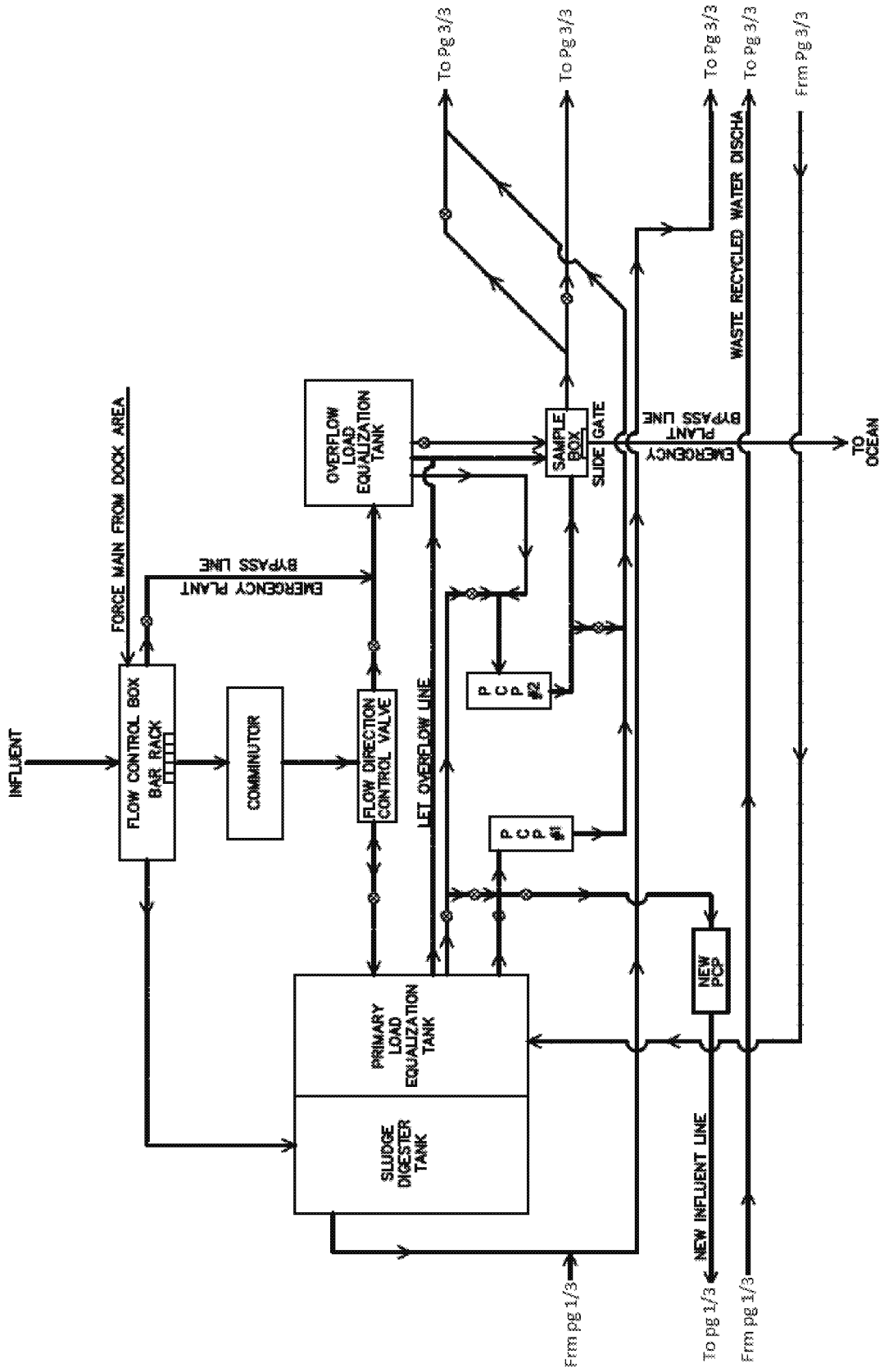

ATTACHMENT C – FLOW SCHEMATIC PART 3

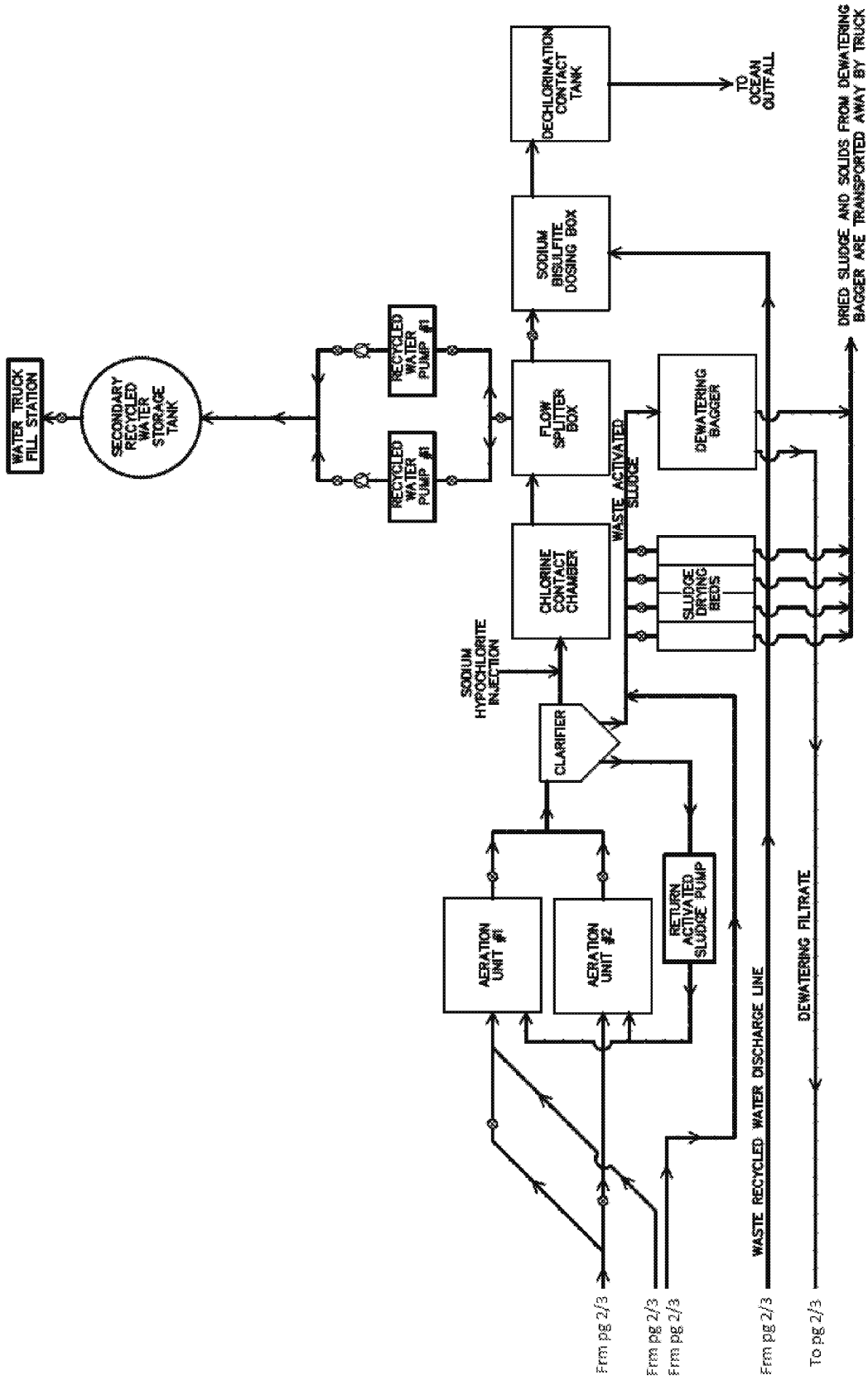

ED_002551_00001589-00043

ATTACHMENT D – STANDARD PROVISIONS

I. STANDARD PROVISIONS – PERMIT COMPLIANCE

A. Duty to Comply

1. The Discharger must comply with all of the terms, requirements, and conditions of this Order. Any noncompliance constitutes a violation of the Clean Water Act (CWA) and the California Water Code and is grounds for enforcement action; permit termination, revocation and reissuance, or modification; denial of a permit renewal application; or a combination thereof. (40 CFR § 122.41(a); Wat. Code, §§ 13261, 13263, 13265, 13268, 13000, 13001, 13304, 13350, 13385.)

2. The Discharger shall comply with effluent standards or prohibitions established under Section 307(a) of the CWA for toxic pollutants within the time provided in the regulations that establish these standards or prohibitions, even if this Order has not yet been modified to incorporate the requirement. (40 CFR § 122.41(a)(1).)

B. Need to Halt or Reduce Activity Not a Defense

It shall not be a defense for a Discharger in an enforcement action that it would have been necessary to halt or reduce the permitted activity in order to maintain compliance with the conditions of this Order. (40 CFR § 122.41(c).)

C. Duty to Mitigate

The Discharger shall take all reasonable steps to minimize or prevent any discharge in violation of this Order that has a reasonable likelihood of adversely affecting human health or the environment. (40 CFR § 122.41(d).)

D. Proper Operation and Maintenance

The Discharger shall at all times properly operate and maintain all facilities and systems of treatment and control (and related appurtenances) which are installed or used by the Discharger to achieve compliance with the conditions of this Order. Proper operation and maintenance also includes adequate laboratory controls and appropriate quality assurance procedures. This provision requires the operation of backup or auxiliary facilities or similar systems that are installed by a Discharger only when necessary to achieve compliance with the conditions of this Order. (40 CFR § 122.41(e).)

E. Property Rights

1. This Order does not convey any property rights of any sort or any exclusive privileges. (40 CFR § 122.41(g).)

2. The issuance of this Order does not authorize any injury to persons or property or invasion of other private rights, or any infringement of state or local law or regulations. (40 CFR § 122.5(c).)

F. Inspection and Entry

The Discharger shall allow the Regional Water Board, State Water Board, USEPA, and/or their authorized representatives (including an authorized contractor acting as their representative), upon the presentation of credentials and other documents, as may be

REVISED TENTATIVE

ED_002551_00001589-00044

required by law, to (33 U.S.C. § 1318(a)(4)(b); 40 CFR § 122.41(i); Wat. Code, §§ 13267, 13383):

1. Enter upon the Discharger's premises where a regulated facility or activity is located or conducted, or where records are kept under the conditions of this Order (33 U.S.C. § 1318(a)(4)(b)(i); 40 CFR § 122.41(i)(1); Wat. Code, §§ 13267, 13383);
2. Have access to and copy, at reasonable times, any records that must be kept under the conditions of this Order (33 U.S.C. § 1318(a)(4)(b)(ii); 40 C.F.R. § 122.41(i)(2); Wat. Code, §§ 13267, 13383);
3. Inspect and photograph, at reasonable times, any facilities, equipment (including monitoring and control equipment), practices, or operations regulated or required under this Order (33 U.S.C. § 1318(a)(4)(b)(ii); 40 CFR § 122.41(i)(3); Wat. Code, §§ 13267, 13383); and
4. Sample or monitor, at reasonable times, for the purposes of assuring Order compliance or as otherwise authorized by the CWA or the Water Code, any substances or parameters at any location. (33 U.S.C. § 1318(a)(4)(b); 40 CFR § 122.41(i)(4); Wat. Code, §§ 13267, 13383.)

G. Bypass

1. Definitions
   a. "Bypass" means the intentional diversion of waste streams from any portion of a treatment facility. (40 CFR § 122.41(m)(1)(i).)
   b. "Severe property damage" means substantial physical damage to property, damage to the treatment facilities, which causes them to become inoperable, or substantial and permanent loss of natural resources that can reasonably be expected to occur in the absence of a bypass. Severe property damage does not mean economic loss caused by delays in production. (40 CFR § 122.41(m)(1)(ii).)
2. *Bypass not exceeding limitations.* The Discharger may allow any bypass to occur which does not cause exceedances of effluent limitations, but only if it is for essential maintenance to assure efficient operation. These bypasses are not subject to the provisions listed in Standard Provisions – Permit Compliance I.G.3, I.G.4, and I.G.5 below. (40 CFR § 122.41(m)(2).)
3. *Prohibition of bypass.* Bypass is prohibited, and the Regional Water Board may take enforcement action against a Discharger for bypass, unless (40 CFR § 122.41(m)(4)(i)):
   a. Bypass was unavoidable to prevent loss of life, personal injury, or severe property damage (40 CFR § 122.41(m)(4)(i)(A));
   b. There were no feasible alternatives to the bypass, such as the use of auxiliary treatment facilities, retention of untreated wastes, or maintenance during normal periods of equipment downtime. This condition is not satisfied if adequate back-up equipment should have been installed in the exercise of reasonable engineering judgment to prevent a bypass that occurred during normal periods of equipment downtime or preventive maintenance (40 CFR § 122.41(m)(4)(i)(B)); and
   c. The Discharger submitted notice to the Regional Water Board as required under Standard Provisions – Permit Compliance I.G.5 below. (40 CFR § 122.41(m)(4)(i)(C).)
4. The Regional Water Board may approve an anticipated bypass, after considering its adverse effects, if the Regional Water Board determines that it will meet the three

REVISED TENTATIVE

ED_002551_00001589-00045

conditions listed in Standard Provisions – Permit Compliance I.G.3 above. (40 CFR § 122.41(m)(4)(ii).)

5. Notice

   a. *Anticipated bypass.* If the Discharger knows in advance of the need for a bypass, it shall submit prior notice, if possible at least 10 days before the date of the bypass. As of December 21, 2020, all notices must be submitted electronically to the initial recipient defined in Standard Provisions – Reporting V.J below. Notices shall comply with 40 CFR part 3, 40 CFR section 122.22, and 40 CFR part 127. (40 CFR § 122.41(m)(3)(i).)

   b. *Unanticipated bypass.* The Discharger shall submit a notice of an unanticipated bypass as required in Standard Provisions - Reporting V.E below (24-hour notice). As of December 21, 2020, all notices must be submitted electronically to the initial recipient defined in Standard Provisions – Reporting V.J below. Notices shall comply with 40 CFR part 3, 40 CFR section 122.22, and 40 CFR part 127. (40 CFR § 122.41(m)(3)(ii).)

H. Upset

Upset means an exceptional incident in which there is unintentional and temporary noncompliance with technology based permit effluent limitations because of factors beyond the reasonable control of the Discharger. An upset does not include noncompliance to the extent caused by operational error, improperly designed treatment facilities, inadequate treatment facilities, lack of preventive maintenance, or careless or improper operation. (40 CFR § 122.41(n)(1).)

1. **Effect of an upset.** An upset constitutes an affirmative defense to an action brought for noncompliance with such technology based permit effluent limitations if the requirements of Standard Provisions – Permit Compliance I.H.2 below are met. No determination made during administrative review of claims that noncompliance was caused by upset, and before an action for noncompliance, is final administrative action subject to judicial review. (40 CFR § 122.41(n)(2).)

2. **Conditions necessary for a demonstration of upset.** A Discharger who wishes to establish the affirmative defense of upset shall demonstrate, through properly signed, contemporaneous operating logs or other relevant evidence that (40 CFR § 122.41(n)(3)):

   a. An upset occurred and that the Discharger can identify the cause(s) of the upset (40 CFR § 122.41(n)(3)(i));

   b. The permitted facility was, at the time, being properly operated (40 CFR § 122.41(n)(3)(ii));

   c. The Discharger submitted notice of the upset as required in Standard Provisions – Reporting V.E.2.b below (24-hour notice) (40 CFR § 122.41(n)(3)(iii)); and

   d. The Discharger complied with any remedial measures required under Standard Provisions – Permit Compliance I.C above. (40 CFR § 122.41(n)(3)(iv).)

3. **Burden of proof.** In any enforcement proceeding, the Discharger seeking to establish the occurrence of an upset has the burden of proof. (40 CFR § 122.41(n)(4).)

REVISED TENTATIVE

ED_002551_00001589-00046

II. STANDARD PROVISIONS – PERMIT ACTION

A. General

This Order may be modified, revoked and reissued, or terminated for cause. The filing of a request by the Discharger for modification, revocation and reissuance, or termination, or a notification of planned changes or anticipated noncompliance does not stay any Order condition. (40 CFR § 122.41(f).)

B. Duty to Reapply

If the Discharger wishes to continue an activity regulated by this Order after the expiration date of this Order, the Discharger must apply for and obtain a new permit. (40 CFR § 122.41(b).)

C. Transfers

This Order is not transferable to any person except after notice to the Regional Water Board. The Regional Water Board may require modification or revocation and reissuance of the Order to change the name of the Discharger and incorporate such other requirements as may be necessary under the CWA and the Water Code. (40 CFR §§ 122.41(l)(3), 122.61.)

III. STANDARD PROVISIONS – MONITORING

A. Samples and measurements taken for the purpose of monitoring shall be representative of the monitored activity. (40 CFR § 122.41(j)(1).)

B. Monitoring must be conducted according to test procedures approved under 40 CFR part 136 for the analyses of pollutants unless another method is required under 40 CFR chapter 1, subchapter N. Monitoring must be conducted according to sufficiently sensitive test methods approved under 40 CFR part 136 for the analysis of pollutants or pollutant parameters or as required under 40 CFR chapter 1, subchapter N. For the purposes of this paragraph, a method is sufficiently sensitive when:

1. The method minimum level (ML) is at or below the level of the most stringent effluent limitation established in the permit for the measured pollutant or pollutant parameter, and either the method ML is at or below the level of the most stringent applicable water quality criterion for the measured pollutant or pollutant parameter or the method ML is above the applicable water quality criterion but the amount of the pollutant or pollutant parameter in the facility's discharge is high enough that the method detects and quantifies the level of the pollutant or pollutant parameter in the discharge; or
2. The method has the lowest ML of the analytical methods approved under 40 CFR part 136 or required under 40 CFR chapter 1, subchapter N for the measured pollutant or pollutant parameter.

In the case of pollutants or pollutant parameters for which there are no approved methods under 40 CFR part 136 or otherwise required under 40 CFR chapter 1, subchapter N, monitoring must be conducted according to a test procedure specified in this Order for such pollutants or pollutant parameters. (40 CFR §§ 122.21(e)(3),122.41(j)(4), 122.44(i)(1)(iv).)

IV. STANDARD PROVISIONS – RECORDS

A. The Discharger shall retain records of all monitoring information, including all calibration and maintenance records and all original strip chart recordings for continuous monitoring instrumentation, copies of all reports required by this Order, and records of all data used to complete the application for this Order, for a period of at least three (3) years from the date of the sample, measurement, report or application. This period may be extended by request of the Regional Water Board Executive Officer at any time. (40 CFR § 122.41(j)(2).)

PRELIMINARY TENTATIVE

ED_002551_00001589-00047

B. Records of monitoring information shall include:

1. The date, exact place, and time of sampling or measurements (40 CFR § 122.41(j)(3)(i));
2. The individual(s) who performed the sampling or measurements (40 CFR § 122.41(j)(3)(ii));
3. The date(s) analyses were performed (40 CFR § 122.41(j)(3)(iii));
4. The individual(s) who performed the analyses (40 CFR § 122.41(j)(3)(iv));
5. The analytical techniques or methods used (40 CFR § 122.41(j)(3)(v)); and
6. The results of such analyses. (40 CFR § 122.41(j)(3)(vi).)

C. Claims of confidentiality for the following information will be denied (40 CFR § 122.7(b)):

1. The name and address of any permit applicant or Discharger (40 CFR § 122.7(b)(1)); and
2. Permit applications and attachments, permits and effluent data. (40 CFR § 122.7(b)(2).)

V. STANDARD PROVISIONS – REPORTING

A. Duty to Provide Information

The Discharger shall furnish to the Regional Water Board, State Water Board, or USEPA within a reasonable time, any information which the Regional Water Board, State Water Board, or USEPA may request to determine whether cause exists for modifying, revoking and reissuing, or terminating this Order or to determine compliance with this Order. Upon request, the Discharger shall also furnish to the Regional Water Board, State Water Board, or USEPA copies of records required to be kept by this Order. (40 CFR § 122.41(h); Wat. Code, §§ 13267, 13383.)

B. Signatory and Certification Requirements

1. All applications, reports, or information submitted to the Regional Water Board, State Water Board, and/or USEPA shall be signed and certified in accordance with Standard Provisions – Reporting V.B.2, V.B.3, V.B.4, V.B.5, and V.B.6 below. (40 CFR § 122.41(k).)
2. All permit applications shall be signed by either a principal executive officer or ranking elected official. For purposes of this provision, a principal executive officer of a federal agency includes: (i) the chief executive officer of the agency, or (ii) a senior executive officer having responsibility for the overall operations of a principal geographic unit of the agency (e.g., Regional Administrators of USEPA). (40 CFR § 122.22(a)(3).).
3. All reports required by this Order and other information requested by the Regional Water Board, State Water Board, or USEPA shall be signed by a person described in Standard Provisions – Reporting V.B.2 above, or by a duly authorized representative of that person. A person is a duly authorized representative only if:
   a. The authorization is made in writing by a person described in Standard Provisions – Reporting V.B.2 above (40 CFR § 122.22(b)(1));
   b. The authorization specifies either an individual or a position having responsibility for the overall operation of the regulated facility or activity such as the position of plant manager, operator of a well or a well field, superintendent, position of equivalent responsibility, or an individual or position having overall responsibility for environmental matters for the company. (A duly authorized representative may thus

REVISED TENTATIVE

ED_002551_00001589-00048

be either a named individual or any individual occupying a named position.) (40 C.F.R. § 122.22(b)(2)); and

c. The written authorization is submitted to the Regional Water Board and State Water Board. (40 CFR § 122.22(b)(3).)

4. If an authorization under Standard Provisions – Reporting V.B.3 above is no longer accurate because a different individual or position has responsibility for the overall operation of the facility, a new authorization satisfying the requirements of Standard Provisions – Reporting V.B.3 above must be submitted to the Regional Water Board and State Water Board prior to or together with any reports, information, or applications, to be signed by an authorized representative. (40 CFR § 122.22(c).)

5. Any person signing a document under Standard Provisions – Reporting V.B.2 or V.B.3 above shall make the following certification:

   "I certify under penalty of law that this document and all attachments were prepared under my direction or supervision in accordance with a system designed to assure that qualified personnel properly gather and evaluate the information submitted. Based on my inquiry of the person or persons who manage the system or those persons directly responsible for gathering the information, the information submitted is, to the best of my knowledge and belief, true, accurate, and complete. I am aware that there are significant penalties for submitting false information, including the possibility of fine and imprisonment for knowing violations." (40 CFR § 122.22(d).)

6. Any person providing the electronic signature for documents described in Standard Provisions – V.B.1, V.B.2, or V.B.3 that are submitted electronically shall meet all relevant requirements of Standard Provisions – Reporting V.B, and shall ensure that all relevant requirements of 40 CFR part 3 (Cross-Media Electronic Reporting) and 40 CFR part 127 (NPDES Electronic Reporting Requirements) are met for that submission. (40 CFR § 122.22(e).)

C. Monitoring Reports

1. Monitoring results shall be reported at the intervals specified in the Monitoring and Reporting Program (Attachment E) in this Order. (40 CFR § 122.41(l)(4).)

2. Monitoring results must be reported on a Discharge Monitoring Report (DMR) form or forms provided or specified by the Regional Water Board or State Water Board. As of December 21, 2016, all reports and forms must be submitted electronically to the initial recipient defined in Standard Provisions – Reporting V.J and comply with 40 CFR part 3, 40 CFR section 122.22, and 40 CFR part 127. (40 CFR § 122.41(l)(4)(i).)

3. If the Discharger monitors any pollutant more frequently than required by this Order using test procedures approved under 40 CFR part 136, or another method required for an industry-specific waste stream under 40 CFR chapter 1, subchapter N, the results of such monitoring shall be included in the calculation and reporting of the data submitted in the DMR or reporting form specified by the Regional Water Board or State Water Board. (40 CFR § 122.41(l)(4)(ii).)

4. Calculations for all limitations, which require averaging of measurements, shall utilize an arithmetic mean unless otherwise specified in this Order. (40 CFR § 122.41(l)(4)(iii).)

D. Compliance Schedules

Reports of compliance or noncompliance with, or any progress reports on, interim and final requirements contained in any compliance schedule of this Order, shall be submitted no later than 14 days following each schedule date. (40 CFR § 122.41(l)(5).)

REVISED TENTATIVE

ED_002551_00001589-00049

E. Twenty-Four Hour Reporting

1. The Discharger shall report any noncompliance which may endanger health or the environment. Any information shall be provided orally within 24 hours from the time the Discharger becomes aware of the circumstances. A report shall also be provided within five (5) days of the time the Discharger becomes aware of the circumstances. The report shall contain a description of the noncompliance and its cause; the period of noncompliance, including exact dates and times, and if the noncompliance has not been corrected, the anticipated time it is expected to continue; and steps taken or planned to reduce, eliminate, and prevent reoccurrence of the noncompliance.

   For noncompliance events related to combined sewer overflows, sanitary sewer overflows, or bypass events, these reports must include the data described above (with the exception of time of discovery) as well as the type of event (i.e., combined sewer overflow, sanitary sewer overflow, or bypass event), type of overflow structure (e.g., manhole, combined sewer overflow outfall), discharge volume untreated by the treatment works treating domestic sewage, types of human health and environmental impacts of the event, and whether the noncompliance was related to wet weather.

   As of December 21, 2020, all reports related to combined sewer overflows, sanitary sewer overflows, or bypass events must be submitted to the Regional Water Board and must be submitted electronically to the initial recipient defined in Standard Provisions – Reporting V.J. The reports shall comply with 40 CFR part 3, 40 CFR section 122.22, and 40 CFR part 127. The Regional Water Board may also require the Discharger to electronically submit reports not related to combined sewer overflows, sanitary sewer overflows, or bypass events under this section. (40 CFR § 122.41(l)(6)(i).)

2. The following shall be included as information that must be reported within 24 hours:

   a. Any unanticipated bypass that exceeds any effluent limitation in this Order. (40 CFR § 122.41(l)(6)(ii)(A).)

   b. Any upset that exceeds any effluent limitation in this Order. (40 CFR § 122.41(l)(6)(ii)(B).)

3. The Regional Water Board may waive the above required written report on a case-by-case basis if an oral report has been received within 24 hours. (40 CFR § 122.41(l)(6)(ii)(B).)

F. Planned Changes

The Discharger shall give notice to the Regional Water Board as soon as possible of any planned physical alterations or additions to the permitted facility. Notice is required under this provision only when (40 CFR § 122.41(l)(1)):

1. The alteration or addition to a permitted facility may meet one of the criteria for determining whether a facility is a new source in section 122.29(b) (40 CFR § 122.41(l)(1)(i)); or

2. The alteration or addition could significantly change the nature or increase the quantity of pollutants discharged. This notification applies to pollutants that are not subject to effluent limitations in this Order. (40 CFR § 122.41(l)(1)(ii).)

G. Anticipated Noncompliance

The Discharger shall give advance notice to the Regional Water Board of any planned changes in the permitted facility or activity that may result in noncompliance with this Order's requirements. (40 CFR § 122.41(l)(2).)

REVISED TENTATIVE

ED_002551_00001589-00050

H. Other Noncompliance

The Discharger shall report all instances of noncompliance not reported under Standard Provisions – Reporting V.C, V.D, and V.E above at the time monitoring reports are submitted. The reports shall contain the information listed in Standard Provision – Reporting V.E above. For noncompliance events related to combined sewer overflows, sanitary sewer overflows, or bypass events, these reports shall contain the information described in Standard Provision – Reporting V.E and the applicable required data in appendix A to 40 CFR part 127. The Regional Water Board may also require the Discharger to electronically submit reports not related to combined sewer overflows, sanitary sewer overflows, or bypass events under this section. (40 CFR § 122.41(l)(7).)

I. Other Information

When the Discharger becomes aware that it failed to submit any relevant facts in a permit application, or submitted incorrect information in a permit application or in any report to the Regional Water Board, State Water Board, or USEPA, the Discharger shall promptly submit such facts or information. (40 CFR § 122.41(l)(8).)

J. Initial Recipient for Electronic Reporting Data

The owner, operator, or the duly authorized representative is required to electronically submit NPDES information specified in appendix A to 40 CFR part 127 to the initial recipient defined in 40 CFR section 127.2(b). USEPA will identify and publish the list of initial recipients on its website and in the Federal Register, by state and by NPDES data group [see 40 CFR section 127.2(c)]. USEPA will update and maintain this listing. (40 CFR § 122.41(l)(9).)

VI. STANDARD PROVISIONS – ENFORCEMENT

A. The Regional Water Board is authorized to enforce the terms of this permit under several provisions of the Water Code, including, but not limited to, sections 13268, 13385, 13386, and 13387.

B. The CWA provides that any person who violates section 301, 302, 306, 307, 308, 318 or 405 of the CWA, or any permit condition or limitation implementing any such sections in a permit issued under section 402, or any requirement imposed in a pretreatment program approved under sections 402(a)(3) or 402(b)(8) of the CWA, is subject to a civil penalty not to exceed $25,000 per day for each violation. The CWA provides that any person who *negligently* violates sections 301, 302, 306, 307, 308, 318, or 405 of the CWA, or any condition or limitation implementing any of such sections in a permit issued under section 402 of the CWA, or any requirement imposed in a pretreatment program approved under section 402(a)(3) or 402(b)(8) of the CWA, is subject to criminal penalties of $2,500 to $25,000 per day of violation, or imprisonment of not more than one year, or both. In the case of a second or subsequent conviction for a negligent violation, a person shall be subject to criminal penalties of not more than $50,000 per day of violation, or by imprisonment of not more than two years, or both. Any person who *knowingly* violates such conditions or limitations is subject to criminal penalties of $5,000 to $50,000 per day of violation, or imprisonment for not more than three years, or both. In the case of a second or subsequent conviction for a knowing violation, a person shall be subject to criminal penalties of not more than $100,000 per day of violation, or imprisonment of not more than 6 years, or both. Any person who *knowingly* violates section 301, 302, 303, 306, 307, 308, 318 or 405 of the CWA, or any permit condition or limitation implementing any of such sections in a permit issued under section 402 of the CWA, and who knows at that time that he thereby places another person in imminent danger of death or serious bodily injury, shall, upon conviction, be subject to a fine of not more than $250,000 or imprisonment of not more than 15 years, or both. In the case of a second or subsequent conviction for a knowing endangerment violation, a person shall be subject to a fine of not

PROPOSED TENTATIVE

ED_002551_00001589-00051

more than $500,000 or by imprisonment of not more than 30 years, or both. An organization, as defined in section 309(c)(3)(B)(iii) of the CWA, shall, upon conviction of violating the imminent danger provision, be subject to a fine of not more than $1,000,000 and can be fined up to $2,000,000 for second or subsequent convictions (40 CFR § 122.41(a)(2); CWC section 13385 and 13387).

C. Any person may be assessed an administrative penalty by the Administrator of USEPA, or an administrative civil liability by the Regional Water Board, or State Water Board for violating section 301, 302, 306, 307, 308, 318 or 405 of this CWA, or any permit condition or limitation implementing any of such sections in a permit issued under section 402 of the CWA. Administrative penalties for Class I violations are not to exceed $10,000 per violation, with the maximum amount of any Class I penalty assessed not to exceed $25,000. Penalties for Class II violations are not to exceed $10,000 per day for each day during which the violation continues, with the maximum amount of any Class II penalty not to exceed $125,000. (40 CFR § 122.41(a)(3).)

D. The CWA provides that any person who falsifies, tampers with, or knowingly renders inaccurate any monitoring device or method required to be maintained under this permit shall, upon conviction, be punished by a fine of not more than $10,000, or imprisonment of not more than two years, or both. If a conviction of a person is for a violation committed after a first conviction of such person under this paragraph, punishment is a fine of not more than $20,000 per day of violation, or imprisonment of not more than four years, or both. (40 CFR § 122.41(j)(5).)

E. The CWA provides that any person who knowingly makes a false statement, representation, or certification, in any record or other document submitted or required to be maintained under this permit, including monitoring reports or reports of compliance or non-compliance shall, upon conviction, be punished by a fine of not more than $10,000 per violation, or by imprisonment for not more than six months per violation, or both (40 CFR § 122.41(k)(2).)

VII. ADDITIONAL PROVISIONS – NOTIFICATION LEVELS – NOT APPLICABLE

REVISED TENTATIVE

ED_002551_00001589-00052

ATTACHMENT E – MONITORING AND REPORTING PROGRAM

CONTENTS

I. General Monitoring Provisions E-2
II. Monitoring Locations E-5
III. Influent Monitoring Requirements E-8
IV. Effluent Monitoring Requirements E-11
A. Monitoring Location EFF-001 ..... E-11
V. Whole Effluent Toxicity Testing Requirements E-16
VI. Land Discharge Monitoring Requirements (Not Applicable) E-22
VII. Recycling Monitoring Requirements (Not Applicable) E-22
VIII. Receiving Water Monitoring Requirements E-22
A. Offshore Water Quality Monitoring Location E-22
B. Benthic Infauna Sediment Chemistry Monitoring Requirements E-27
IX. Other Monitoring Requirements E-29
A. Special Study – Data for Plume Model Mixing Predictions E-29
B. Outfall and Diffuser Inspection E-29
C. Biosolids and Sludge Management E-29
X. Reporting Requirements E-29
A. General Monitoring and Reporting Requirements E-29
B. Self-Monitoring Reports (SMRs) E-31
C. Discharge Monitoring Reports (DMRs) E-33
D. Other Reports E-33

TABLES

Table E-1. Monitoring Station Locations E-5
Table E-2. Influent Monitoring E-8
Table E-3. Effluent Monitoring E-11
Table E-4. USEPA Test Methods and Test Acceptability Criteria E-18
Table E-5. Offshore Receiving Water Monitoring Requirements E-22
Table E-6. ASBS Compliance Monitoring Requirements E-24
Table E-7. Additional Offshore and Shoreline Receiving Water Monitoring Requirements E-27
Table E-8. Benthic Infauna and Sediment Chemistry Monitoring Requirements E-27
Table E-9. Monitoring Periods and Reporting Schedule E-31

FIGURES

Figure E- 1. Inshore Water Quality Station Locations E-7

REVISED TENTATIVE

ED_002551_00001589-00053

ATTACHMENT E – MONITORING AND REPORTING PROGRAM (MRP)

Section 308 of the federal Clean Water Act (CWA) and sections 122.41(h), (j)-(*l*), 122.44(i), and 122.48 of title 40 of the Code of Federal Regulations (40 CFR) require that all National Pollutant Discharge Elimination System (NPDES) permits specify monitoring and reporting requirements. California Water Code (CWC) sections 13267 and 13383 also authorize the Regional Water Board to establish monitoring, inspection, entry, reporting, and recordkeeping requirements. This MRP establishes monitoring, reporting, and recordkeeping requirements that implement the federal and California laws and/or regulations.

I. GENERAL MONITORING PROVISIONS

A. All samples shall be representative of the waste discharge under conditions of peak load. Quarterly influent and effluent analyses shall be performed during the first quarter (January, February, and March), the second quarter (April, May, and June), the third quarter (July, August, and September), and the fourth quarter (October, November, and December). Semiannual influent and effluent analyses shall be performed during the first quarter (January, February, and March) and third quarter (July, August, and September). Annual analyses shall be performed during the third quarter (July, August, and September). Should there be instances when monitoring could not be performed during these specified months, the Discharger must notify the Regional Water Board, state the reason why monitoring could not be conducted, and obtain approval from the Executive Officer for an alternate schedule. Results of quarterly, semiannual, and annual analyses shall be reported by the due date specified in Table E-~~7~~9 of the MRP.

B. Pollutants shall be analyzed using the analytical methods described in 40 CFR § 136.3, 136.4, and 136.5; or where no methods are specified for a given pollutant, by methods approved by this Regional Water Board or the State Water Board. Laboratories analyzing effluent samples and receiving water samples shall be certified by the State Water Resources Control Board, Division of Drinking Water (DDW) Environmental Laboratory Accreditation Program (ELAP) or approved by the Executive Officer and must include quality assurance/quality control (QA/QC) data in their reports. A copy of the laboratory certification shall be provided in the Annual Report due to the Regional Water Board each time a new certification and/or renewal of the certification is obtained from ELAP.

C. Water/wastewater samples must be analyzed within allowable holding time limits as specified in 40 CFR § 136.3. All QA/QC analyses must be run on the same dates that samples are analyzed. The Discharger shall retain the QA/QC documentation in its files and make available for inspection and/or submit this documentation when requested by the Regional Water Board. Proper chain of custody procedures must be followed and a copy of this documentation shall be submitted with the monthly report.

D. The Discharger shall calibrate and perform maintenance procedures on all monitoring instruments to insure accuracy of measurements, or shall ensure that both equipment activities will be conducted.

E. For any analyses performed for which no procedure is specified in the United States Environmental Protection Agency (USEPA) guidelines, or in the MRP, the constituent or parameter analyzed and method or procedure used must be specified in the monitoring report.

F. Each monitoring report must affirm in writing, "all analyses were conducted at a laboratory certified for such analyses under the ELAP, or approved by the Executive Officer and in accordance with current USEPA guideline procedures or as specified in this monitoring and reporting program."

ED_002551_00001589-00054

G. The monitoring report shall specify the USEPA analytical method used, the Method Detection Limit (MDL), and the Reporting Level (RL) [the applicable Minimum Level (ML) or Reported Minimum Level (RML)] for each pollutant. The MLs are those published by the State Water Board in appendix II of the 2015 Ocean Plan. The ML represents the lowest quantifiable concentration in a sample based on the proper application of all method-based analytical procedures and the absence of any matrix interference. When all specific analytical steps are followed and after appropriate application of method specific factors, the ML also represents the lowest standard in the calibration curve for that specific analytical technique. When there is deviation from the analytical method for dilution or concentration of samples, other factors are applied to the ML depending on the sample preparation. The resulting value is the reported Minimum Level.

H. The Discharger shall select the analytical method that provides an ML lower than the effluent limitation or performance goal established for a given parameter or where no such requirement exists, the lowest applicable water quality objective in the Ocean Plan. If the effluent limitation, performance goal, or the lowest applicable water quality objective is lower than all the MLs in Appendix II of the 2015 Ocean Plan, the Discharger must select the method with the lowest ML for compliance purposes. The Discharger shall include in the annual summary reports a list of the analytical methods and MLs employed for each test.

I. The Discharger shall instruct its laboratories to establish calibration standards so that the ML (or its equivalent if there is differential treatment of samples relative to calibration standards) is the lower calibration standard. At no time is the Discharger to use analytical data derived from extrapolation beyond the lowest point of the calibration curve.

J. The Discharger shall develop and maintain a record of all spills or bypasses of raw or partially treated sewage from its collection system or treatment plant according to the requirements in the Waste Discharge Requirements (WDRs) of this Order. This record shall be made available to the Regional Water Board upon request and a spill summary shall be included in the annual summary report.

K. If the Discharger samples and performs analyses (other than for process/operational control, startup, research, or equipment testing) on any influent, effluent, or receiving water constituent more frequently than required by this Order using approved analytical methods, the results of those analyses shall be included in the monitoring report. These results shall be reflected in the calculation of the average (or median) used in demonstrating compliance with limitations set forth in this Order.

L. For all bacterial analyses, sample dilutions should be performed so the expected range of values is bracketed (for example, with multiple tube fermentation method or membrane filtration method, 2 to 16,000 per 100 mL for total and fecal coliforms, at a minimum; and 1 to 1000 per 100 mL for *Enterococcus*). The detection methods used for each analysis shall be reported with the results of the analyses.

1. Detection methods used for coliforms (total and fecal) shall be those presented in Table 1A of 40 CFR § 136, unless alternate methods have been approved in advance by the USEPA pursuant to 40 CFR § 136.
2. Detection methods for *E. coli* shall be those presented in Table 1A of 40 CFR § 136 or in the USEPA publication EPA 600/4-85/076, *Test Methods for* Escherichia coli *and* Enterococci *in Water By Membrane Filter Procedure*, or any improved method determined by the Regional Water Board and USEPA to be appropriate.

M. All receiving and ambient water monitoring conducted in compliance with the MRP must be consistent with the Quality Assurance requirements of the Surface Water Ambient Monitoring Program (SWAMP).

REVISED TENTATIVE

ED_002551_00001589-00055

N. NPDES compliance monitoring focuses on the effects of a specific point source discharge. Generally, it is not designed to assess impacts from other sources of pollution (e.g., nonpoint source runoff, aerial fallout) or to evaluate the current status of important ecological resources in the water body. The scale of existing compliance monitoring programs does not match the spatial and, to some extent, temporal boundaries of the important physical and biological processes in the ocean. In addition, the spatial coverage provided by compliance monitoring programs is less than ten percent of the near shore ocean environment. Better technical information is needed about status and trends in ocean waters to guide management and regulatory decisions, to verify the effectiveness of existing programs, and to shape policy on marine environmental protection.

O. The Regional Water Board and USEPA, working with other groups, have developed a comprehensive basis for effluent and receiving water monitoring appropriate to large publicly owned treatment works (POTWs) discharging to waters of the Southern California Bight. This effort has culminated in the publication by the Southern California Coastal Water Research Project (SCCWRP) of the Model Monitoring Program guidance document (Schiff, K.C., J.S. Brown and S.B. Weisberg. 2001. *Model Monitoring Program for Large Ocean Dischargers in Southern California*. SCCWRP Tech. Rep. #357. Southern California Coastal Water Research Project, Westminster, CA. 101 pp.). This guidance provides the principles, framework and recommended design for effluent and receiving water monitoring elements that have guided development of the monitoring program described below.

P. The conceptual framework for the Model Monitoring Program has three components that comprise a range of spatial and temporal scales: (1) core monitoring; (2) regional monitoring; and (3) special studies.

1. Core monitoring is local in nature and focused on monitoring trends in quality and effects of the point source discharge. This includes effluent monitoring as well as some aspects of receiving water monitoring. In the monitoring program described below, these core components are typically referred to as local monitoring.

2. Regional monitoring is focused on questions that are best answered by a region-wide approach that incorporates coordinated survey design and sampling techniques. The major objective of regional monitoring is to collect information required to assess how safe it is to swim in the ocean, how safe it is to eat seafood from the ocean, and whether the marine ecosystem is being protected. Key components of regional monitoring include elements to address pollutant mass emission estimations, public health concerns, monitoring of trends in natural resources, assessment of regional impacts from all contaminant sources, and protection of beneficial uses. The final design of regional monitoring programs is developed by means of steering committees and technical committees comprised of participating agencies and organizations and is not specified in this Order.

3. Special studies are focused on refined questions regarding specific effects or development of monitoring techniques and are anticipated to be of short duration and/or small scale, although multiyear studies also may be needed. Questions regarding effluent or receiving water quality, discharge impacts, ocean processes around the discharge, or development of techniques for monitoring the same, arising out of the results of core or regional monitoring, may be pursued through special studies. These studies are by nature ad hoc and cannot be typically anticipated in advance of the five-year permit cycle.

Q. Laboratory Certification. Laboratories analyzing monitoring samples shall be certified by the State Water Resources Control Board (State Water Board), in accordance with the provision

REVISED TENTATIVE

ED_002551_00001589-00056