CALIFORNIA REGIONAL WATER QUALITY CONTROL BOARD
SAN DIEGO REGION

2375 Northside Drive. Suite 100, San Diego, CA 92108
(619) 516-1990 • Fax (619) 516-1994
http://www.waterboards.ca.gov/sandiego/

TENTATIVE ORDER R9-2018-0063
NPDES NO. CA0109258

WASTE DISCHARGE REQUIREMENTS FOR LIQUID STONE HOLDINGS, LLC DBA STONE BREWING CO. DISCHARGE TO THE PACIFIC OCEAN THROUGH THE SAN ELIJO OCEAN OUTFALL

The following Discharger is subject to waste discharge requirements (WDRs) set forth in this Order:

Table 1. Discharger Information

Discharger	Liquid Stone Holdings, LLC
Name of Facility	Stone Brewing Co. LLC
Facility Address	1999 Citracado Parkway
	Escondido, CA 92029
	San Diego County

Table 2. Discharge Location

Discharge Point	Effluent Description	Discharge Point Latitude (North)	Discharge Point Longitude (West)	Receiving Water
001	Brine Wastewaters and Cooling Tower Blowdown	33° 00' 21" N	117° 18' 09" W	Pacific Ocean

Table 3. Administrative Information

This Order was adopted on:	**October 10, 2018**
This Order shall become effective on:	**December 1, 2018**
This Order shall expire on:	**November 30, 2023**
The Discharger shall file a Report of Waste Discharge (ROWD) as an application for reissuance of WDRs in accordance with title 23, California Code of Regulations (CCR), and an application for reissuance of a National Pollutant Discharge Elimination System (NPDES) permit no later than:	**180 days prior to the Order expiration date**
The U.S. Environmental Protection Agency (USEPA) and the California Regional Water Quality Control Board, San Diego Region have classified this discharge as follows:	**Minor**

I, David W. Gibson, Executive Officer, do hereby certify that this Order with all attachments is a full, true, and correct copy of the Order adopted by the California Regional Water Quality Control Board, San Diego Region, on the date indicated above.

TENTATIVE
David W. Gibson, Executive Officer

CONTENTS

I. Facility Information 3
II. Findings 3
III. Discharge Prohibitions 4
IV. Effluent Limitations and Discharge Specifications 4
A. Effluent Limitations and Performance Goals 4
B. Land Discharge Specifications – Not Applicable 10
C. Recycling Specifications – Not Applicable 10
V. Receiving Water Limitations 10
A. Surface Water Limitation 10
B. Groundwater Limitations – Not Applicable 11
VI. Provisions 12
A. Standard Provisions 12
B. Monitoring and Reporting Program (MRP) Requirements 12
C. Special Provisions 12
1. Reopener Provisions 12
2. Special Studies, Technical Reports, and Additional Monitoring Requirements – Not Applicable 13
3. Best Management Practices and Pollution Prevention – Not Applicable 13
4. Construction, Operation and Maintenance Specifications 13
5. Special Provisions for Publicly-Owned Treatment Works (POTWs) – Not Applicable 14
6. Other Special Provisions – Not Applicable 14
7. Compliance Schedules – Not Applicable 14
VII. Compliance Determination 14

TABLES

Table 1. Discharger Information 1
Table 2. Discharge Location 1
Table 3. Administrative Information 1
Table 4. Effluent Limitations at Monitoring Location EFF-001[1] 4
Table 5. Performance Goals at Monitoring Location EFF-001[1] 5

ATTACHMENTS

Attachment A – Definitions A-1
Attachment B – Map B-1
Attachment C – Flow Schematic C-1
Attachment D – Standard Provisions D-1
Attachment E – Monitoring and Reporting Program E-1
Attachment F – Fact Sheet F-1
Attachment G – Discharge Prohibitions contained in the Ocean Plan and Basin Plan G-1

ED_002551_00000878-00002

I. FACILITY INFORMATION

Information describing the Stone Brewing Co. LLC (Facility) is summarized in Table 1 and in sections I and II of the Fact Sheet (Attachment F). Section I of the Fact Sheet also includes information regarding the Facility's permit application.

II. FINDINGS

The California Regional Water Quality Control Board, San Diego Region (San Diego Water Board), finds:

A. **Legal Authorities.** This Order serves as WDRs pursuant to article 4, chapter 4, division 7 of the California Water Code (Water Code) (commencing with section 13260). This Order is also issued pursuant to section 402 of the federal Clean Water Act (CWA) and implementing regulations adopted by the USEPA and chapter 5.5, division 7 of the Water Code (commencing with section 13370). This Order shall serve as an NPDES permit authorizing the Liquid Stone Holdings, LLC (Discharger) to discharge into waters of the United States (U.S.) at the discharge location described in Table 2 subject to the WDRs in this Order.

B. **Background and Rationale for Requirements.** The San Diego Water Board developed the requirements in this Order based on information submitted as part of the application, through monitoring and reporting programs, and other available information. The Fact Sheet (Attachment F), which contains background information and rationale for the requirements in this Order, is hereby incorporated into and constitutes Findings for this Order. Attachments A through E and G are also incorporated into this Order.

C. **Provisions and Requirements Implementing State Law.** The provisions/requirements in subsections IV.B, IV.C, V.B, VI.C.1.b, and VI.C.1.c are included to implement State law only. These provisions/requirements are not required or authorized under the federal CWA; consequently, violations of these provisions/requirements are not subject to the enforcement remedies that are available for NPDES violations.

D. **Executive Officer Delegation of Authority.** The San Diego Water Board by prior resolution has delegated all matters that may legally be delegated to its Executive Officer to act on its behalf pursuant to Water Code section 13223. Therefore, the Executive Officer is authorized to act on the San Diego Water Board's behalf on any matter within this Order unless such delegation is unlawful under Water Code section 13223 or this Order explicitly states otherwise.

E. **Notification of Interested Parties.** The San Diego Water Board has notified the Discharger and interested agencies and persons of its intent to prescribe WDRs for the discharge and has provided them with an opportunity to submit their written comments and recommendations. The San Diego Water Board has also provided an opportunity for the Discharger and interested agencies and persons to submit oral comments and recommendations at a public hearing. Details of the notification are provided in the Fact Sheet (Attachment F).

F. **Consideration of Public Comment.** The San Diego Water Board, in a public meeting, heard and considered all comments pertaining to the discharge. Details of the public hearing are provided in the Fact Sheet (Attachment F).

THEREFORE, IT IS HEREBY ORDERED, that this Order supersedes Order No. R9-2012-0006, as amended by Order No. R9-2014-0097, except for enforcement purposes, and, in order to meet the provisions contained in division 7 of the Water Code (commencing with section 13000) and regulations adopted thereunder, and the provisions of the CWA and regulations and guidelines adopted thereunder, the Discharger shall comply with the requirements in this Order. The

ED_002551_00000878-00003

Discharger is hereby authorized to discharge subject to WDRs in this Order at the discharge location described in Table 2 to the Pacific Ocean off the coast of San Diego County. If any part of this Order is subject to a temporary stay of enforcement, unless otherwise specified in the order granting stay, the Discharger shall comply with the analogous portions of Order No. R9-2012-0006, as amended by Order No. R9-2014-0097. This action in no way prevents the San Diego Water Board from taking enforcement action for past violations of Order No. R9-2012-0006, as amended by Order No. R9-2014-0097.

III. DISCHARGE PROHIBITIONS

A. The discharge of waste from the Facility not in compliance with the effluent limitations specified in section IV.A of this Order, and/or to a location other than Discharge Point No. 001, unless specifically regulated by this Order or separate WDRs, is prohibited.

B. The Discharger must comply with Discharge Prohibitions contained in the *Water Quality Control Plan for Ocean Waters of California, California Ocean Plan* (Ocean Plan), incorporated into this Order as if fully set forth herein and summarized in Attachment G, as a condition of this Order.

C. The Discharger must comply with Discharge Prohibitions contained in chapter 4 of the *Water Quality Control Plan for the San Diego Basin* (Basin Plan), incorporated into this Order as if fully set forth herein and summarized in Attachment G, as a condition of this Order.

IV. EFFLUENT LIMITATIONS AND DISCHARGE SPECIFICATIONS

A. Effluent Limitations and Performance Goals

1. Effluent Limitations

The Discharger shall maintain compliance with the following effluent limitations at Discharge Point No. 001, with compliance measured at Monitoring Location EFF-001, as described in the Monitoring and Reporting Program (MRP, Attachment E):

Table 4. Effluent Limitations at Monitoring Location EFF-001[1]

Parameter	Units	Effluent Limitations[2,3]				
		Average Monthly	Average Weekly	Maximum Daily	Instantaneous Minimum	Instantaneous Maximum
Flow	million gallons per day (MGD)	--	--	0.10	--	--
Oil and Grease	milligram per liter (mg/L)	25	40	--	--	75
	pounds per day (lbs/day)	20.9	33.4	--	--	62.6
Total Suspended Solids (TSS)	mg/L	60	--	--	--	--
	lbs/day	50.0	--	--	--	--
Settleable Solids	milliliter per liter (mL/L)	1.0	1.5	--	--	3.0
Turbidity	nephelometric turbidity unit (NTU)	75	100	--	--	225
pH	standard units	--	--	--	6.0	9.0

1. See Attachment A for definitions of abbreviations and a glossary of common terms used in this Order.

2. Scientific "E" notation is used to express certain values. In scientific "E" notation, the number following the "E" indicates that position of the decimal point in the value. Negative numbers after the "E" indicate that the value is less than 1, and positive numbers after the "E" indicate that the value is greater than 1. In this notation, a value of 6.1E-02 represents 6.1×10^{-2} or 0.061, 6.1E+02 represents 6.1×10^{2} or 610, and 6.1E+00 represents 6.1×10^{0} or 6.1.

ED_002551_00000878-00004

3. The mass emission rate (MER) limitation, in lbs/day, is calculated based on the following equation: MER (lbs/day) = 8.34 x Q x C, where Q is the permitted flow for the Facility (0.10 MGD) and C is the concentration (mg/L).

2. Performance Goals

Parameters that do not have reasonable potential to cause or contribute to an exceedance of water quality objectives, or for which reasonable potential to cause or contribute to an exceedance of water quality objectives cannot be determined, are referred to as performance goal parameters and are assigned the performance goals listed in the following table. Performance goal parameters shall be monitored at Monitoring Location EFF-001 as described in the MRP (Attachment E), but the results will be used for informational purposes only, not compliance determinations. The performance goals in the following table are not water quality-based effluent limitations (WQBELs) and are not enforceable, as such.

Table 5. Performance Goals at Monitoring Location EFF-001[1]

Parameter	Unit	Performance Goals[2,3]			
		6-Month Median	Average Monthly	Maximum Daily	Instantaneous Maximum
OBJECTIVES FOR PROTECTION OF MARINE AQUATIC LIFE					
Arsenic, Total Recoverable	microgram per liter (µg/L)	1.19E+03	--	6.91E+03	1.83E+04
	lbs/day	9.95E-01	--	5.76E+00	1.53E+01
Cadmium, Total Recoverable	µg/L	2.38E+02	--	9.52E+02	2.38E+03
	lbs/day	1.98E-01	--	7.94E-01	1.98E+00
Chromium VI, Total Recoverable[4]	µg/L	4.76E+02	--	1.90E+03	4.76E+03
	lbs/day	3.97E-01	--	1.59E+00	3.97E+00
Copper, Total Recoverable	µg/L	2.40E+02	--	2.38E+03	6.67E+03
	lbs/day	2.00E-01	--	1.99E+00	5.56E+00
Lead, Total Recoverable	µg/L	4.76E+02	--	1.90E+03	4.76E+03
	lbs/day	3.97E-01	--	1.59E+00	3.97E+00
Mercury, Total Recoverable	µg/L	9.40E+00	--	3.80E+01	9.51E+01
	lbs/day	7.84E-03	--	3.17E-02	7.93E-02
Nickel, Total Recoverable	µg/L	1.19E+03	--	4.76E+03	1.19E+04
	lbs/day	9.92E-01	--	3.97E+00	9.92E+00
Selenium, Total Recoverable	µg/L	3.57E+03	--	1.43E+04	3.57E+04
	lbs/day	2.98E+00	--	1.19E+01	2.98E+01
Silver, Total Recoverable	µg/L	1.29E+02	--	6.28E+02	1.63E+03
	lbs/day	1.07E-01	--	5.24E-01	1.36E+00
Zinc, Total Recoverable	µg/L	2.86E+03	--	1.71E+04	4.57E+04
	lbs/day	2.39E+00	--	1.43E+01	3.81E+01
Cyanide, Total Recoverable	µg/L	2.38E+02	--	9.52E+02	2.38E+03
	lbs/day	1.98E-01	--	7.94E-01	1.98E+00
Total Chlorine Residual	µg/L	4.76E+02	--	1.90E+03	1.43E+04
	lbs/day	3.97E-01	--	1.59E+00	1.19E+01

ED_002551_00000878-00005

Parameter	Unit	Performance Goals[2,3]			
		6-Month Median	Average Monthly	Maximum Daily	Instantaneous Maximum
Ammonia (expressed as nitrogen)	µg/L	1.43E+05	--	5.71E+05	1.43E+06
	lbs/day	1.19E+02	--	4.76E+02	1.19E+03
Chronic Toxicity[5,6]	"Pass"/"Fail"	--	--	"Pass"	--
Phenolic Compounds (non-chlorinated)[1]	µg/L	7.14E+03	--	2.86E+04	7.14E+04
	lbs/day	5.95E+00	--	2.38E+01	5.95E+01
Chlorinated Phenolics[1]	µg/L	2.38E+02	--	9.52E+02	2.38E+03
	lbs/day	1.98E-01	--	7.94E-01	1.98E+00
Endosulfan[1]	µg/L	2.14E+00	--	4.28E+00	6.43E+00
	lbs/day	1.79E-03	--	3.57E-03	5.36E-03
Endrin	µg/L	4.76E-01	--	9.52E-01	1.43E+00
	lbs/day	3.97E-04	--	7.94E-04	1.19E-03
HCH (BHC)[1]	µg/L	9.52E-01	--	1.90E+00	2.86E+00
	lbs/day	7.94E-04	--	1.59E-03	2.38E-03
Radioactivity	picocurie per liter (pCi/L)	Not to exceed limits specified in title 17, division 1, chapter 5, subchapter 4, group 3, article 3, section 30253 of the CCR, Reference to section 30253 is prospective, including future changes to any incorporated provisions of federal law, as the changes take effect.			
OBJECTIVES FOR PROTECTION OF HUMAN HEALTH – NONCARCINOGENS					
Acrolein	µg/L	--	5.24E+04	--	--
	lbs/day	--	4.37E+01	--	--
Antimony	µg/L	--	2.86E+05	--	--
	lbs/day	--	2.38E+02	--	--
Bis(2-chloroethoxy) Methane	µg/L	--	1.05E+03	--	--
	lbs/day	--	8.73E-01	--	--
Bis(2-chloroisopropyl) Ether	µg/L	--	2.86E+05	--	--
	lbs/day	--	2.38E+02	--	--
Chlorobenzene	µg/L	--	1.36E+05	--	--
	lbs/day	--	1.13E+02	--	--
Chromium (III)[4]	µg/L	--	4.52E+07	--	--
	lbs/day	--	3.77E+04	--	--
Di-n-butyl Phthalate	µg/L	--	8.33E+05	--	--
	lbs/day	--	6.95E+02	--	--
Dichlorobenzenes[1]	µg/L	--	1.21E+06	--	--
	lbs/day	--	1.01E+03	--	--
Diethyl Phthalate	µg/L	--	7.85E+06	--	--
	lbs/day	--	6.55E+03	--	--
Dimethyl Phthalate	µg/L	--	1.95E+08	--	--
	lbs/day	--	1.63E+05	--	--

Parameter	Unit	Performance Goals[2,3]			
		6-Month Median	Average Monthly	Maximum Daily	Instantaneous Maximum
4,6-dinitro-2-methylphenol	µg/L	--	5.24E+04	--	--
	lbs/day	--	4.37E+01	--	--
2,4-dinitrophenol	µg/L	--	9.52E+02	--	--
	lbs/day	--	7.94E-01	--	--
Ethylbenzene	µg/L	--	9.76E+05	--	--
	lbs/day	--	8.14E+02	--	--
Fluoranthene	µg/L	--	3.57E+03	--	--
	lbs/day	--	2.98E+00	--	--
Hexachlorocyclopentadiene	µg/L	--	1.38E+04	--	--
	lbs/day	--	1.15E+01	--	--
Nitrobenzene	µg/L	--	1.17E+03	--	--
	lbs/day	--	9.73E-01	--	--
Thallium, Total Recoverable	µg/L	--	4.76E+02	--	--
	lbs/day	--	3.97E-01	--	--
Toluene	µg/L	--	2.02E+07	--	--
	lbs/day	--	1.69E+04	--	--
Tributyltin	µg/L	--	3.33E-01	--	--
	lbs/day	--	2.78E-04	--	--
1,1,1-trichloroethane	µg/L	--	1.29E+08	--	--
	lbs/day	--	1.07E+05	--	--
OBJECTIVES FOR PROTECTION OF HUMAN HEALTH – CARCINOGENS					
Acrylonitrile	µg/L	--	2.38E+01	--	--
	lbs/day	--	1.98E-02	--	--
Aldrin	µg/L	--	5.24E-03	--	--
	lbs/day	--	4.37E-06	--	--
Benzene	µg/L	--	1.40E+03	--	--
	lbs/day	--	1.17E+00	--	--
Benzidine	µg/L	--	1.64E-02	--	--
	lbs/day	--	1.37E-05	--	--
Beryllium	µg/L	--	7.85E+00	--	--
	lbs/day	--	6.55E-03	--	--
Bis(2-chloroethyl) Ether	µg/L	--	1.07E+01	--	--
	lbs/day	--	8.93E-03	--	--
Bis(2-ethlyhexyl) Phthalate	µg/L	--	8.33E+02	--	--
	lbs/day	--	6.95E-01	--	--
Carbon Tetrachloride	µg/L	--	2.14E+02	--	--
	lbs/day	--	1.79E-01	--	--

ED_002551_00000878-00007

Parameter	Unit	Performance Goals[2,3]			
		6-Month Median	Average Monthly	Maximum Daily	Instantaneous Maximum
Chlordane[1]	µg/L	--	5.47E-03	--	--
	lbs/day	--	4.57E-06	--	--
Chlorodibromomethane	µg/L	--	2.05E+03	--	--
	lbs/day	--	1.71E+00	--	--
Chloroform	µg/L	--	3.09E+04	--	--
	lbs/day	--	2.58E+01	--	--
Dichlorodiphenyltrichloroethane (DDT)[1]	µg/L	--	4.05E-02	--	--
	lbs/day	--	3.37E-05	--	--
1,4-dichlorobenzene	µg/L	--	4.28E+03	--	--
	lbs/day	--	3.57E+00	--	--
3,3'-dichlorobenzidine	µg/L	--	1.93E+00	--	--
	lbs/day	--	1.61E-03	--	--
1,2-dichloroethane	µg/L	--	6.66E+03	--	--
	lbs/day	--	5.56E+00	--	--
1,1-dichloroethylene	µg/L	--	2.14E+02	--	--
	lbs/day	--	1.79E-01	--	--
Dichlorobromomethane	µg/L	--	1.48E+03	--	--
	lbs/day	--	1.23E+00	--	--
Dichloromethane (Methylene Chloride)	µg/L	--	1.07E+05	--	--
	lbs/day	--	8.93E+01	--	--
1,3-dichloropropene (1,3-Dichloropropylenes)	µg/L	--	2.12E+03	--	--
	lbs/day	--	1.77E+00	--	--
Dieldrin	µg/L	--	9.52E-03	--	--
	lbs/day	--	7.94E-06	--	--
2,4-dinitrotoluene	µg/L	--	6.19E+02	--	--
	lbs/day	--	5.16E-01	--	--
1,2-diphenylhydrazine	µg/L	--	3.81E+01	--	--
	lbs/day	--	3.18E-02	--	--
Halomethanes[1]	µg/L	--	3.09E+04	--	--
	lbs/day	--	2.58E+01	--	--
Heptachlor	µg/L	--	1.19E-02	--	--
	lbs/day	--	9.92E-06	--	--
Heptachlor Epoxide	µg/L	--	4.76E-03	--	--
	lbs/day	--	3.97E-06	--	--
Hexachlorobenzene	µg/L	--	5.00E-02	--	--
	lbs/day	--	4.17E-05	--	--

ED_002551_00000878-00008

Parameter	Unit	Performance Goals[2,3]			
		6-Month Median	Average Monthly	Maximum Daily	Instantaneous Maximum
Hexachlorobutadiene	µg/L	--	3.33E+03	--	--
	lbs/day	--	2.78E+00	--	--
Hexachloroethane	µg/L	--	5.95E+02	--	--
	lbs/day	--	4.96E-01	--	--
Isophorone	µg/L	--	1.74E+05	--	--
	lbs/day	--	1.45E+02	--	--
N-nitrosodimethylamine	µg/L	--	1.74E+03	--	--
	lbs/day	--	1.45E+00	--	--
N-nitrosodi-N-propylamine	µg/L	--	9.04E+01	--	--
	lbs/day	--	7.54E-02	--	--
N-nitrosodiphenylamine	µg/L	--	5.95E+02	--	--
	lbs/day	--	4.96E-01	--	--
Polynuclear Aromatic Hydrocarbons (PAHs)[1]	µg/L	--	2.09E+00	--	--
	lbs/day	--	1.75E-03	--	--
Polychlorinated Biphenyls (PCBs)[1]	µg/L	--	4.52E-03	--	--
	lbs/day	--	3.77E-06	--	--
Tetrachlorodibenzodioxin (TCDD) Equivalents[1]	µg/L	--	9.28E-07	--	--
	lbs/day	--	7.74E-10	--	--
1,1,2,2-tetrachloroethane	µg/L	--	5.47E+02	--	--
	lbs/day	--	4.57E-01	--	--
Tetrachloroethylene (Tetrachloroethene)	µg/L	--	4.76E+02	--	--
	lbs/day	--	3.97E-01	--	--
Toxaphene	µg/L	--	5.00E-02	--	--
	lbs/day	--	4.17E-05	--	--
Trichloroethylene	µg/L	--	6.43E+03	--	--
	lbs/day	--	5.36E+00	--	--
1,1,2-trichloroethane	µg/L	--	2.24E+03	--	--
	lbs/day	--	1.87E+00	--	--
2,4,6-trichlorophenol	µg/L	--	6.90E+01	--	--
	lbs/day	--	5.76E-02	--	--
Vinyl Chloride	µg/L	--	8.57E+03	--	--
	lbs/day	--	7.15E+00	--	--

1. See Attachment A for definitions of abbreviations and a glossary of common terms used in this Order.
2. Scientific "E" notation is used to express certain values. In scientific "E" notation, the number following the "E" indicates that position of the decimal point in the value. Negative numbers after the "E" indicate that the value is less than 1, and positive numbers after the "E" indicate that the value is greater than 1. In this notation, a value of 6.1E-02 represents 6.1×10^{-2} or 0.061, 6.1E+02 represents 6.1×10^{2} or 610, and 6.1E+00 represents 6.1×10^{0} or 6.1.
3. The MER limitation, in lbs/day, was calculated based on the following equation: MER (lbs/day) = 8.34 x Q x C, where Q is the permitted flow for the Facility (0.10 MGD) and C is the concentration (mg/L).

4. The Discharger may, at their option, apply this performance goal as a total chromium performance goal.

5. Applicable to chronic toxicity as specified in section VII.K of this Order and section III.C of the MRP (Attachment E).

6. The chronic toxicity performance goal is protective of both the numeric acute and chronic toxicity 2015 Ocean Plan water quality objectives. The performance goal will be implemented using *Short-term Methods for Estimating the Chronic Toxicity of Effluents and Receiving Waters to West Coast Marine and Estuarine Organisms* (EPA/600/R-95/136, 1995), current USEPA guidance in the *National Pollutant Discharge Elimination System Test of Significant Toxicity Implementation Document* (EPA 833-R-10-003, June 2010) (https://www3.epa.gov/npdes/pubs/wet_final_tst_implementation2010.pdf), and USEPA Regions 8, 9, and 10, Toxicity Training Tool (January 2010).

B. Land Discharge Specifications – Not Applicable

C. Recycling Specifications – Not Applicable

V. RECEIVING WATER LIMITATIONS

A. Surface Water Limitation

The receiving water limitations set forth below for ocean waters are based on water quality objectives contained in the Basin Plan and Ocean Plan and are a required part of this Order. The discharge of waste shall not cause or contribute to violation of these limitations in the Pacific Ocean. Compliance with these limitations shall be determined from samples collected at stations representative of the area outside of the zone of initial dilution (ZID).

1. Bacterial Characteristics

a. Within a zone bounded by the shoreline and a distance of three nautical miles from the shoreline, including all kelp beds, the following bacterial objectives shall be maintained throughout the water column. The ZID for the ocean outfall is excluded.

i. 30-day Geometric Mean – The following standards are based on the geometric mean of the five most recent samples from each site:

(a) Total coliform density (colony forming units, CFU) shall not exceed 1,000 per 100 milliliter (ml);

(b) Fecal coliform density (CFU) shall not exceed 200 per 100 ml; and

(c) Enterococcus density (CFU) shall not exceed 35 per 100 ml.

ii. Single Sample Maximum:

(a) Total coliform density (CFU) shall not exceed 10,000 per 100 ml;

(b) Fecal coliform density (CFU) shall not exceed 400 per 100 ml;

(c) Enterococcus density (CFU) shall not exceed 104 per 100 ml; and

(d) Total coliform density (CFU) shall not exceed 1,000 per 100 ml when the fecal coliform/total coliform ratio exceeds 0.1.

b. The ZID of any wastewater outfall shall be excluded from designation as kelp beds for purposes of bacterial standards. Adventitious assemblages of kelp plants on waste discharge structures (e.g., outfall pipes and diffusers) do not constitute kelp beds for purposes of bacterial standards.

c. At all areas where shellfish may be harvested for human consumption, as determined by the San Diego Water Board, the median total coliform density (CFU) shall not exceed 70 per 100 ml throughout the water column, and not more than 10 percent of the samples shall exceed 230 per 100 ml.

2. Physical Characteristics

a. Floating particulates and grease and oils shall not be visible.

b. The discharge of waste shall not cause aesthetically undesirable discoloration of the ocean surface.

c. Natural light shall not be significantly reduced at any point outside the ZID as a result of the discharge of waste.

d. The rate of deposition of inert solids and the characteristics of inert solids in the ocean sediments shall not be changed such that benthic communities are degraded.

e. Trash shall not be present in ocean waters, along shorelines or adjacent areas in amounts that adversely affect beneficial uses or cause nuisance.

3. Chemical Characteristics

a. The dissolved oxygen concentration shall not at any time be depressed more than 10 percent from that which occurs naturally, as the result of the discharge of oxygen demanding waste materials.

b. The pH shall not be changed at any time more than 0.2 units from that which occurs naturally.

c. The dissolved sulfide concentration of waters in and near sediments shall not be significantly increased above that present under natural conditions.

d. The concentration of substances set forth in Chapter II, Table 1 of the Ocean Plan shall not be increased in marine sediments to levels that would degrade indigenous biota.

e. The concentration of organic materials in marine sediments shall not be increased to levels that would degrade marine life.

f. Nutrient materials shall not cause objectionable aquatic growths or degrade indigenous biota.

g. Numerical water quality objectives established in Chapter II, Table 1 of the Ocean Plan apply to all discharges within the jurisdiction of the Ocean Plan. Unless otherwise specified, all metal concentrations are expressed as total recoverable concentrations.

4. Biological Characteristics

a. Marine communities, including vertebrate, invertebrate, and plant species, shall not be degraded.

b. The natural taste, odor, color of fish, shellfish, or other marine resources used for human consumption shall not be altered.

c. The concentration of organic materials in fish, shellfish, or other marine resources used for human consumption shall not bioaccumulate to levels that are harmful to human health.

5. Radioactivity

Discharge of radioactive waste shall not degrade marine life.

B. Groundwater Limitations – Not Applicable

ED_002551_00000878-00011

VI. PROVISIONS

A. Standard Provisions

1. **Federal Standard Provisions.** The Discharger shall comply with all Standard Provisions included in Attachment D of this Order.

2. **San Diego Water Board Standard Provisions.** The Discharger shall comply with the following provisions. In the event that there is any conflict, duplication, or overlap between provisions specified by this Order, the more stringent provision shall apply.

   a. The expiration date of this Order is contained in Table 3 of this Order. After the expiration date, the terms and conditions of this Order are automatically continued pending issuance of a new permit, provided that all requirements of USEPA's NPDES regulations at title 40 of the Code of Federal Regulations (40 CFR) section 122.6 and the State's regulations at title 23, division 3, chapter 9, article 3, section 2235.4 of the CCR regarding the continuation of expired permits and WDRs are met.

   b. A copy of this Order shall be posted at a prominent location and shall be available to site personnel, San Diego Water Board, State Water Resources Control Board (State Water Board), and USEPA or their authorized representative at all times.

B. Monitoring and Reporting Program (MRP) Requirements

1. The Discharger shall comply with the MRP, and future revisions thereto, in Attachment E.

2. Notifications required to be provided under this Order to the San Diego Water Board shall be made to:

   E-mail – SanDiego@waterboards.ca.gov, or
   Telephone – (619) 516-1990, or
   Facsimile – (619) 516-1994.

C. Special Provisions

1. Reopener Provisions

   a. This Order may be reopened for modification to include an effluent limitation if monitoring establishes that the discharge causes, has the reasonable potential to cause, or contributes to an excursion above a performance goal(s) set forth in section IV.A.2 of this Order or as otherwise described in Table 1 of the Ocean Plan. (40 CFR section 122.44(d)(1))

   b. This Order may be reopened for modification of the monitoring and reporting requirements and/or special studies requirements, at the discretion of the San Diego Water Board. Such modification(s) may include, but is (are) not limited to, revision(s) (i) to implement recommendations from Southern California Coastal Water Research Project (SCCWRP); (ii) to develop, refine, implement, and/or coordinate a regional monitoring program; (iii) to develop and implement improved monitoring and assessment programs in keeping with San Diego Water Board Resolution No. R9-2012-0069, *Resolution in Support of a Regional Monitoring Framework*; and/or (iv) to add provisions to require the Discharger to evaluate and provide information on cost and values of the MRP (Attachment E).

   c. This Order may be modified, revoked and reissued, or terminated for cause in accordance with the provisions of 40 CFR parts 122, 124, and 125 at any time prior to its expiration under any of the following circumstances:

ED_002551_00000878-00012

i. Violation of any terms or conditions of this Order (Water Code section 13381(a));

ii. Obtaining this Order by misrepresentation or failure to disclose fully all relevant facts (Water Code section 13381(b)); and

iii. A change in any condition that requires either a temporary or permanent reduction or elimination of the permitted discharge (Water Code section 13381(c)).

d. The filing of a request by the Discharger for modifications, revocation and reissuance, or termination of this Order does not stay any condition of this Order. Notification by the Discharger of planned operational or facility changes or anticipated noncompliance with this Order does not stay any condition of this Order. (40 CFR section 122.41(f))

e. If any applicable toxic effluent standard or prohibition (including any schedule of compliance specified in such effluent standard or prohibition) is promulgated under CWA section 307(a) for a toxic pollutant and that standard or prohibition is more stringent than any limitation on the pollutant in this Order, the San Diego Water Board may institute proceedings under these regulations to modify or revoke and reissue this Order to conform to the toxic effluent standard or prohibition. (40 CFR section 122.44(b)(1))

f. This Order may be reopened and modified for consistency with any new or modified water quality control plan, policy, law, or regulation. (40 CFR section 122.62(a)(3).)

g. This Order may be reopened and modified to revise effluent limitations as a result of Ocean Plan, Basin Plan, and/or other statewide Water Quality Control Plan amendments; or the adoption of a total maximum daily load (TMDL) for the receiving water. (40 CFR section 122.62(a)(2))

h. This Order may be reopened upon submission by the Discharger of adequate information, as determined by the San Diego Water Board, to provide for dilution credits or a mixing zone, as may be appropriate. (40 CFR section 122.62(a)(2))

i. This Order may also be reopened and modified, revoked and reissued, or terminated in accordance with the provisions of 40 CFR sections 122.44, 122.62 to 122.64, and 125.62. Causes for taking such actions include, but are not limited to, failure to comply with any condition of this Order, and endangerment to human health or the environment resulting from the permitted activity.

j. The mass emission performance goals, contained in section IV.A.2 of this Order, may be re-evaluated and modified during this Order term, or this Order may be modified to incorporate WQBELs, in accordance with the requirements set forth at 40 CFR sections 122.62 and 124.5.

2. Special Studies, Technical Reports, and Additional Monitoring Requirements – Not Applicable

3. Best Management Practices and Pollution Prevention – Not Applicable

4. Construction, Operation and Maintenance Specifications

a. The Facility shall be protected against a 100-year peak stream flows as defined by the San Diego County Flood Control District (FCD).

ED_002551_00000878-00013

b. The Facility shall be protected against erosion, overland runoff, and other impacts resulting from a 100-year, 24-hour storm event as defined by the San Diego County FCD.

5. Special Provisions for Publicly-Owned Treatment Works (POTWs) – Not Applicable

6. Other Special Provisions – Not Applicable

7. Compliance Schedules – Not Applicable

VII. COMPLIANCE DETERMINATION

Compliance with the effluent limitations contained in section IV.A of this Order shall be determined as specified below:

A. Compliance with 30-day Average

If the median of daily discharges over any 30-day period exceeds the 30-day average effluent limitation for a given parameter, an alleged violation will be flagged and the Discharger will be considered out of compliance for each day of that 30-day period for that parameter. The next assessment of compliance will occur after the next sample is taken. If only a single sample is taken during a given 30-day period and the analytical result for that sample exceeds the 30-day average effluent limitation, the Discharger will be considered out of compliance for the 30-day period. For any 30-day period during which no sample is taken, no compliance determination can be made for the 30-day average effluent limitation.

B. Compliance with Average Monthly Effluent Limitation (AMEL)

If the average of daily discharges over a calendar month exceeds the AMEL for a given parameter, an alleged violation will be flagged and the Discharger will be considered out of compliance for each day of that month for that parameter (e.g., resulting in 31 days of noncompliance in a 31-day month). The average of daily discharges over the calendar month that exceeds the AMEL for a parameter will be considered out of compliance for that month only. If only a single sample is taken during the calendar month and the analytical result for that sample exceeds the AMEL, the Discharger will be considered out of compliance for that calendar month. For any one calendar month during which no sample (daily discharge) is taken, no compliance determination can be made for that calendar month.

C. Compliance with Average Weekly Effluent Limitation (AWEL)

If the average of daily discharges over a calendar week (Sunday through Saturday) exceeds the AWEL for a given parameter, an alleged violation will be flagged and the Discharger will be considered out of compliance for each day of that week for that parameter, resulting in seven days of noncompliance. The average of daily discharges over the calendar week that exceeds the AWEL for a parameter will be considered out of compliance for that week only. If only a single sample is taken during the calendar week and the analytical result for that sample exceeds the AWEL, the Discharger will be considered out of compliance for that calendar week. For any one calendar week during which no sample (daily discharge) is taken, no compliance determination can be made for that calendar week.

D. Compliance with Maximum Daily Effluent Limitation (MDEL)

The MDEL shall apply to flow weighted 24-hour composite samples, or grab samples, as specified in the MRP (Attachment E). If a daily discharge exceeds the MDEL for a given parameter, an alleged violation will be flagged and the Discharger will be considered out of compliance for that parameter for that one day only within the reporting period. For any one day during which no sample is taken, no compliance determination can be made for that day.

ED_002551_00000878-00014

E. Compliance with Instantaneous Minimum Effluent Limitation

The instantaneous minimum effluent limitation shall apply to grab sample determinations. If the analytical result of a single grab sample is lower than the instantaneous minimum effluent limitation for a parameter, an alleged violation will be flagged and the Discharger will be considered out of compliance for that parameter for that single sample. Non-compliance for each sample will be considered separately (e.g., the results of two grab samples taken within a calendar day that both are lower than the instantaneous minimum effluent limitation would result in two instances of noncompliance with the instantaneous minimum effluent limitation).

F. Compliance with Instantaneous Maximum Effluent Limitation

The instantaneous maximum effluent limitation shall apply to grab sample determinations. If the analytical result of a single grab sample is higher than the instantaneous maximum effluent limitation for a parameter, an alleged violation will be flagged and the Discharger will be considered out of compliance for that parameter for that single sample. Non-compliance for each sample will be considered separately (e.g., the results of two grab samples taken within a calendar day that both exceed the instantaneous maximum effluent limitation would result in two instances of noncompliance with the instantaneous maximum effluent limitation).

G. Compliance with 6-Month Median Effluent Limitation

If the median of daily discharges over any 180-day period exceeds the 6-month median effluent limitation for a given parameter, an alleged violation will be flagged and the Discharger will be considered out of compliance for each day of that 180-day period for that parameter. The next assessment of compliance will occur after the next sample is taken. If only a single sample is taken during a given 180-day period and the analytical result for that sample exceeds the 6-month median effluent limitation, the Discharger will be considered out of compliance for the 180-day period. For any 180-day period during which no sample is taken, no compliance determination can be made for the 6-month median effluent limitation.

H. Mass and Concentration Limitations

Compliance with mass and concentration effluent limitations for the same parameter shall be determined separately with their respective limitations. When the concentration of a constituent in an effluent sample is determined to be “Not Detected” (ND) or “Detected, but Not Quantified” (DNQ), the corresponding MER determined from that sample concentration shall also be reported as “ND” or “DNQ.”

I. Ocean Plan Provisions for Table 1 Constituents

Sufficient sampling and analysis shall be required to determine compliance with the effluent limitations.

1. **Compliance with Single-constituent Effluent Limitations**

   The Discharger shall be deemed out of compliance with an effluent limitation or discharge specification if the concentration of the constituent in the monitoring sample is greater than the effluent limitation or discharge specification and greater than or equal to the minimum level (ML).

2. **Compliance with Effluent Limitations Expressed as a Sum of Several Constituents**

   The Discharger is out of compliance with an effluent limitation that applies to the sum of a group of chemicals (e.g., PCBs) if the sum of the individual pollutant concentrations is greater than the effluent limitation. Individual pollutants of the group will be considered to have a concentration of zero if the constituent is reported as ND or DNQ.

ED_002551_00000878-00015

3. **Multiple Sample Data Reduction**

   The concentration of the pollutant in the effluent may be estimated from the result of a single sample analysis or by a measure of central tendency (arithmetic mean, geometric mean, median, etc.) of multiple sample analyses when all sample results are quantifiable (i.e., greater than or equal to the reported ML). When one or more sample results are reported as ND or DNQ, the central tendency concentration of the pollutant shall be the median (middle) value of the multiple samples. If, in an even number of samples, one or both of the middle values is ND or DNQ, the median will be the lower of the two middle values.

4. **Mass Emission Rate (MER)**

   The MER, in pounds per day, shall be obtained from the following calculation for any calendar day:

   MER (lbs/day) = 8.34 x Q x C

   In which Q and C are the flow rate in MGD and the constituent concentration in mg/L, respectively, and 8.34 is a conversion factor (lbs/gallon of water). If a composite sample is taken, then C is the concentration measured in the composite sample and Q is the average flow rate occurring during the period over which the samples are composited.

J. Bacterial Standards and Analysis

1. The geometric mean used for determining compliance with bacterial standards is calculated with the following equation:

   Geometric Mean = (C1 x C2 x … x Cn)1/n

   Where n is the number of days samples were collected during the period and C is the concentration of bacteria (CFU/100 ml) found on each day of sampling.

2. For all bacterial analyses, sample dilutions should be performed so the range of values extends from 2 to 16,000 CFU/100 ml. The detection methods used for each analysis shall be reported with the results of the analysis. Detection methods used for coliforms (total and fecal) shall be those listed in 40 CFR part 136 or any improved method determined by the San Diego Water Board (and approved by USEPA) to be appropriate. Detection methods used for enterococcus shall be those presented in USEPA publication USEPA 600/4-85/076, *Test Methods for Escherichia coli and Enterococci in Water by Membrane Filter Procedure*, listed under 40 CFR part 136, and any other method approved by the San Diego Water Board.

K. Chronic Toxicity

The discharge is subject to determination of "Pass" or "Fail" from a chronic toxicity test using the Test of Significant Toxicity (TST) statistical t-test approach described in *National Pollutant Discharge Elimination System Test of Significant Toxicity Implementation Document* (EPA 833-R-10-003, 2010), Appendix A, Figure A-1 and Table A-1, and Appendix B, Table B-1. The null hypothesis (Ho) for the TST statistical approach is:

Mean discharge "in-stream" waste concentration (IWC) response ≤0.75 × Mean control response.

A test result that rejects this null hypothesis is reported as "Pass." A test result that does not reject this null hypothesis is reported as "Fail." This is a t-test (formally Student's t-test), a statistical analysis comparing two sets of replicate observations—in the case of whole effluent toxicity (WET) test, only two test concentrations (i.e., a control and IWC). The purpose of this

statistical test is to determine if the means of the two sets of observations are different (i.e., if the IWC or receiving water concentration differs from the control (the test result is "Pass" or "Fail")). The Welch's t-test employed by the TST statistical approach is an adaptation of Student's t-test and is used with two samples having unequal variances.

The performance goal for chronic toxicity is exceeded when a chronic toxicity test, analyzed using the TST statistical approach, results in "Fail."

The performance goal for chronic toxicity is set at the IWC for the discharge (0.42% effluent[1]) and expressed in units of the TST statistical approach ("Pass" or "Fail"). All monitoring for the performance goal for chronic toxicity shall be reported using the IWC effluent concentration and negative control, expressed in units of the TST. The TST hypothesis (Ho) (see above) is statistically analyzed using the IWC and a negative control. Effluent toxicity tests shall be run using *Short-Term Methods for Estimating the Chronic Toxicity of Effluent and Receiving Waters to West Coast Marine Estuarine Organisms* (EPA/600/R-95/136, 1995). The San Diego Water Board's review of reported toxicity test results will include review of concentration-response patterns as appropriate (see section IV.C.5 of the Fact Sheet (Attachment F)). As described in the laboratory audit directives to the San Jose Creek Water Quality Laboratory from the State Water Board dated August 07, 2014, and from USEPA dated December 24, 2013, the Percent Minimum Significant Difference (PMSD) criteria only apply to compliance reporting for the no-observed-effect-concentration (NOEC) and the sublethal statistical endpoints of the NOEC, and therefore are not used to interpret TST results. Standard operating procedures (SOPs) used by the toxicity testing laboratory to identify and report valid, invalid, anomalous, or inconclusive effluent (and receiving water) toxicity test measurement results from the TST statistical approach, including those that incorporate a consideration of concentration-response patterns, must be submitted to the San Diego Water Board (40 CFR section 122.41(h)). The San Diego Water Board will make a final determination as to whether a toxicity test result is valid, and may consult with the Discharger, USEPA, the State Water Board's Quality Assurance (QA) Officer, or the State Water Board, Division of Drinking Water (DDW) Environmental Laboratory Accreditation Program (ELAP) as needed.

[1] IWC = 1/minimum initial dilution factor (Dm) = 1/237 = 0.0042 = 0.42%

ATTACHMENT A – DEFINITIONS

Part 1. – Abbreviations

Abbreviation	Definition
40 CFR	Title 40 of the Code of Federal Regulations
AMEL[1]	Average Monthly Effluent Limitation
AQUA	Aquaculture
ASBS[1]	Areas of Special Biological Significance
AWEL[1]	Average Weekly Effluent Limitation
Basin Plan	*Water Quality Control Plan for the San Diego Basin*
BAT	Best available Technology Economically Achievable
BCT	Best Conventional Pollutant Control Technology
BIOL	Preservation of Biological Habitats of Special Significance
BOD_5	Biochemical Oxygen Demand (5-day @ 20°C)
BPJ	Best Professional Judgement
BPT	Best Practicable Treatment Control Technology
°C	Degrees Celsius
CCR	California Code of Regulations
CEQA	California Environmental Quality Act
CFR	Code of Federal Regulations
CFU	Colony Forming Units
CIWQS	California Integrated Water Quality System
COMM	Commercial and Sport Fishing
CWA	Clean Water Act
DBA	Doing Business As
DDT[1]	Dichlorodiphenyltrichloroethane
DDW	Division of Drinking Water
Discharger	Liquid Stone Holdings, LLC
Dm	Initial Dilution Factor
DMR	Discharge Monitoring Report
DNQ[1]	Detected, But Not Quantified
EC25	Effects Concentration at 25 Percent
ELAP	Environmental Laboratory Accreditation Program
ELGs	Effluent Limitations, Guidelines and Standards
ELO	Escondido Land Outfall
eSMR	Electronic Self-Monitoring Reports
°F	Degrees Fahrenheit
Facility	Stone Brewing Co. LLC
FCD	Flood Control District
GPD	Gallons Per Day
HARRF	Hale Avenue Resource Recovery Facility
HCH[1]	Hexachlorocyclohexane, also known as BHC
Ho	Hypothesis
IBCS	Industrial Brine Collection System
IND	Industrial Service Supply
IWC[1]	“In-Stream” Waste Concentration
lbs/day	Pounds per Day
LC	Lethal Concentration

ED_002551_00000878-00018

Abbreviation	Definition
LC 50	Percent Waste Giving 50 Percent Survival of Test Organisms
MAR	Marine Habitat
MBRs	Membrane Bioreactors
MDEL[1]	Maximum Daily Effluent Limitation
MDL[1]	Method Detection Limit
MEC	Maximum Effluent Concentration
MER	Mass Emission Rate
MFRO Facility	Membrane Filtration/Reverse Osmosis Facility
mg/kg	Milligram per Kilogram
mg/L	Milligram per Liter
MGD	Million Gallons per Day
MIGR	Migration of Aquatic Organisms
ML[1]	Minimum Level
ml	Milliliter
ml/L	Milliliter per Liter
MRP	Monitoring and Reporting Program
NAV	Navigation
ND	Not Detected
ng/L	Nanogram per Liter
NOEC	No-Observed-Effect-Concentration
NOEL	No Observed Effect Level
NPDES	National Pollutant Discharge Elimination System
NSPS	New Source Performance Standards
NTU	Nephelometric Turbidity Unit
Ocean Plan	*Water Quality Control Plan for Ocean Waters of California, California Ocean Plan*
PAHs[1]	Polynuclear Aromatic Hydrocarbons
PCBs[1]	Polychlorinated Biphenyls
pCi/L	Picocuries per Liter
PMSD	Percent Minimum Significant Difference
POTWs	Publicly-Owned Treatment Works
ppt	Parts per Thousand
QA	Quality Assurance
QAPP	Quality Assurance Project Plan
QC	Quality Control
RARE	Rare, Threatened, or Endangered Species
REC-1	Contact Water Recreation
REC-2	Non-Contact Water Recreation
RL	Reporting Level
RO	Reverse Osmosis
ROWD	Report of Waste Discharge
RPA	Reasonable Potential Analysis
San Diego Water Board	California Regional Water Quality Control Board, San Diego Region
SCCWRP	Southern California Coastal Waters Research Project
SEOO	San Elijo Ocean Outfall
SHELL	Shellfish Harvesting
SMR	Self-Monitoring Report
SOPs	Standard Operating Procedures

ED_002551_00000878-00019

Abbreviation	Definition
SPWN	Spawning, Reproduction, and/or Early Development
SSM Rule	Sufficiently Sensitive Methods Rule
State Water Board	State Water Resources Control Board
TAC	Test Acceptability Criteria
TBELs	Technology-Based Effluent Limitations
TCDD[1]	Tetrachlorodibenzodioxin
TIE[1]	Toxicity Identification Evaluation
TMDL	Total Maximum Daily Load
TRE[1]	Toxicity Reduction Evaluation
TSD	Technical Support Document
TSS	Total Suspended Solids
TST	Test of Significant Toxicity
TUa	Toxic Units Acute
TUc	Toxic Units Chronic
µg	Microgram
µg/kg	Microgram per Kilogram
µg/L	Microgram per Liter
UM3	USEPA Modeling Application Visual Plumes
U.S.C.	United States Code
U.S.	United States
USEPA	United States Environmental Protection Agency
Water Code	California Water Code
WDRs	Waste Discharge Requirements
WET	Whole Effluent Toxicity
WILD	Wildlife Habitat
WQBELs	Water Quality-Based Effluent Limitations
ZID	Zone of Initial Dilution

1 See Part 2 of Attachment A (Glossary of Common Terms) for further definition.

ED_002551_00000878-00020

Part 2. – Glossary of Common Terms

30-day average
The arithmetic mean of pollutant parameter values of samples collected in a period of 30 consecutive days.

Areas of Special Biological Significance (ASBS)
Those areas designated by the State Water Board as ocean areas requiring protection of species or biological communities to the extent that alteration of natural water quality is undesirable. All Areas of Special Biological Significance are also classified as a subset of State Water Quality Protection Areas.

Average Monthly Effluent Limitation (AMEL)
The highest allowable average of daily discharges over a calendar month, calculated as the sum of all daily discharges measured during a calendar month divided by the number of daily discharges measured during that month.

Average Weekly Effluent Limitation (AWEL)
The highest allowable average of daily discharges over a calendar week (Sunday through Saturday), calculated as the sum of all daily discharges measured during a calendar week divided by the number of daily discharges measured during that week.

Beneficial Uses
The uses of water necessary for the survival or well being of man, plants, and wildlife. These uses of water serve to promote the tangible and intangible economic, social, and environmental goals. "Beneficial Uses" of the waters of the State that may be protected against include, but are not limited to, domestic, municipal, agricultural and industrial supply; power generation; recreation; aesthetic enjoyment; navigation; and preservation and enhancement of fish, wildlife, and other aquatic resources or preserves. In the *Water Quality Control Plan for the San Diego Basin* (Basin Plan), existing beneficial uses are uses that were attained in the surface or ground water on or after November 28, 1975; and potential beneficial uses are uses that would probably develop in future years through the implementation of various control measures. "Beneficial Uses" are equivalent to "Designated Uses" under federal law. [California Water Code section 13050(f)].

Best Management Practices (BMPs)
Schedules of activities, prohibitions of practices, maintenance procedures, and other management practices to prevent or reduce the pollution of waters of the U.S. BMPs also include treatment requirements, operating procedures, and practices to control plant site runoff, spillage or leaks, sludge or waste disposal, or drainage from raw material storage.

Bioassay
A test used to evaluate the relative potency of a chemical or a mixture of chemicals by comparing its effect on a living organism with the effect of a standard preparation on the same type of organism.

Biosolids
Nutrient-rich organic materials resulting from the treatment of sewage sludge. When treated and processed, sewage sludge becomes biosolids which can be safely recycled and applied as fertilizer to sustainably improve and maintain productive soils and stimulate plant growth.

Brine
The byproduct of desalinated water having a salinity concentration greater than a desalination facility's intake source water.

Bypass
The intentional diversion of waste streams from any portion of a treatment facility. (40 CFR section 122.41(m)(1)(i).)

Chlordane
Shall mean the sum of chlordane-alpha, chlordane-gamma, chlordene-alpha, chlordene-gamma, nonachlor-alpha, nonachlor-gamma, and oxychlordane.

Chronic Toxicity
This parameter shall be used to measure the acceptability of waters for supporting a healthy marine biota until improved methods are developed to evaluate biological response.

a. Chronic Toxicity (TUc)
   Expressed as Toxic Units Chronic (TUc)

$$TUc = \frac{100}{NOEL}$$

b. No Observed Effect Level (NOEL)

The NOEL is expressed as the maximum percent effluent or receiving water that causes no observable effect on a test organism, as determined by the result of a critical life stage toxicity test listed in Ocean Plan Appendix II.

Chlorinated Phenolics
The sum of 4-chloro-3-methylphenol, 2-chlorophenol, pentachlorophenol, 2,4,5-trichlorophenol, and 2,4,6-trichlorophenol.

Composite Sample
A composite sample is defined as a combination of at least eight sample aliquots of at least 100 ml, collected at periodic intervals during the operating hours of a facility over a 24-hour period. For volatile pollutants, aliquots must be combined in the laboratory immediately before analysis. The composite must be flow proportional; either the time interval between each aliquot or the volume of each aliquot must be proportional to either the stream flow at the time of sampling or the total stream flow since the collection of the previous aliquot. Aliquots may be collected manually or automatically. The 100-ml minimum volume of an aliquot does not apply to automatic self-purging samplers. If one day is defined as a 24-hour period other than a calendar day, the analytical result for the 24-hour period will be considered as the result for the calendar day in which the 24-hour period ends.

Daily Discharge
Daily Discharge is defined as either: (1) the total mass of the constituent discharged over the calendar day (12:00 am through 11:59 pm) or any 24-hour period that reasonably represents a calendar day for purposes of sampling (as specified in the permit), for a constituent with limitations expressed in units of mass; or (2) the unweighted arithmetic mean measurement of the constituent over the day for a constituent with limitations expressed in other units of measurement (e.g., concentration).

The daily discharge may be determined by the analytical results of a composite sample taken over the course of one day (a calendar day or other 24-hour period defined as a day) or by the arithmetic mean of analytical results from one or more grab samples taken over the course of the day.

A composite sample is defined as a combination of at least eight sample aliquots of at least 100 ml, collected at periodic intervals during the operating hours of a facility over a 24-hour period. For volatile pollutants, aliquots must be combined in the laboratory immediately before analysis. The composite must be flow proportional; either the time interval between each aliquot or the volume of each aliquot must be proportional to either the stream flow at the time of sampling or the total stream flow since the collection of the previous aliquot. Aliquots may be collected manually or automatically. The 100-ml minimum volume of an aliquot does not apply to automatic self-purging samplers. If one day is defined as a 24-hour period other than a calendar day, the analytical result for the 24-hour period will be considered as the result for the calendar day in which the 24-hour period ends.

ED_002551_00000878-00022

A grab sample is an individual sample of at least 100 ml collected at a randomly selected time over a period not exceeding 15 minutes.

Degrade
Degradation shall be determined by comparison of the waste field and reference site(s) for characteristic species diversity, population density, contamination, growth anomalies, debility, or supplanting of normal species by undesirable plant and animal species. Degradation occurs if there are significant differences in any of three major biotic groups, namely, demersal fish, benthic invertebrates, or attached algae. Other groups may be evaluated where benthic species are not affected, or are not the only ones affected.

Desalination Facility
An industrial facility that processes water to remove salts and other components from the source water to produce water that is less saline than the source water.

Detected, but Not Quantified (DNQ)
Sample results that are less than the reported ML, but greater than or equal to the laboratory's MDL. Sample results reported as DNQ are estimated concentrations.

Dichlorobenzenes
Shall mean the sum of 1,2- and 1,3-dichlorobenzene.

Dichlorodiphenyltrichloroethane (DDT)
Shall mean the sum of 4,4'DDT, 2,4'DDT, 4,4'DDE, 2,4'DDE, 4,4'DDD, and 2,4'DDD.

Dilution Credit
The amount of dilution granted to a discharge in the calculation of a water quality-based effluent limitation, based on the allowance of a specified mixing zone. It is calculated from the dilution ratio or determined through conducting a mixing zone study or modeling of the discharge and receiving water.

Discharge
Discharge of a pollutant means: (a) Any addition of any "pollutant" or combination of pollutants to "waters of the United States" from any "point source," or (b) Any addition of any pollutant or combination of pollutants to the waters of the "contiguous zone" or the ocean from any point source other than a vessel or other floating craft which is being used as a means of transportation. This definition includes additions of pollutants into waters of the United States from: surface runoff which is collected or channelled by man; discharges through pipes, sewers, or other conveyances owned by a State, municipality, or other person which do not lead to a treatment works; and discharges through pipes, sewers, or other conveyances, leading into privately owned treatment works. This term does not include an addition of pollutants by any "indirect discharger."

Discharge Monitoring Reports (DMRs)
The DMRs means the Environmental Protection Agency (EPA) uniform national form, including any subsequent additions, revisions, or modifications for the reporting of self-monitoring results by permittees. DMRs must be used by "approved States" as well as by EPA. EPA will supply DMRs to any approved State upon request. The EPA national forms may be modified to substitute the State agency name, address, logo, and other similar information, as appropriate, in place of EPA's.

Downstream Ocean Waters
Waters downstream with respect to ocean currents.

Dredged Material
Any material excavated or dredged from the navigable waters of the U.S., including material otherwise referred to as "spoil."

ED_002551_00000878-00023

Enclosed Bays
Indentations along the coast that enclose an area of oceanic water within distinct headlands or harbor works. Enclosed bays include all bays where the narrowest distance between headlands or outermost harbor works is less than 75 percent of the greatest dimension of the enclosed portion of the bay. This definition includes but is not limited to: Humboldt Bay, Bodega Harbor, Tomales Bay, Drakes Estero, San Francisco Bay, Morro Bay, Los Angeles Harbor, Upper and Lower Newport Bay, Mission Bay, and San Diego Bay.

Endosulfan
The sum of endosulfan-alpha and -beta and endosulfan sulfate.

Estuaries and Coastal Lagoons
Estuaries and Coastal Lagoons are waters at the mouths of streams that serve as mixing zones for fresh and ocean waters during a major portion of the year. Mouths of streams that are temporarily separated from the ocean by sandbars shall be considered as estuaries. Estuarine waters will generally be considered to extend from a bay or the open ocean to the upstream limit of tidal action but may be considered to extend seaward if significant mixing of fresh and salt water occurs in the open coastal waters. The waters described by this definition include but are not limited to the Sacramento-San Joaquin Delta as defined by Section 12220 of the California Water Code, Suisun Bay, Carquinez Strait downstream to Carquinez Bridge, and appropriate areas of the Smith, Klamath, Mad, Eel, Noyo, and Russian Rivers.

Facility
Stone Brewing Co. LLC

Grab Sample
An individual sample of at least 100 milliliters collected at a randomly selected time over a period not exceeding 15 minutes. The sample is taken from a waste stream on a one-time basis without consideration of the flow rate of the waste stream and without consideration of time of day.

Halomethanes
The mean the sum of bromoform, bromomethane (methyl bromide) and chloromethane (methyl chloride).

HCH
The mean the sum of the alpha, beta, gamma (lindane) and delta isomers of hexachlorocyclohexane. Also known as BHC

Indicator Bacteria
Includes total coliform bacteria, fecal coliform bacteria (or E. coli), and/or Enterococcus bacteria.

Initial Dilution
The process that results in the rapid and irreversible turbulent mixing of wastewater with ocean water around the point of discharge.

For a submerged buoyant discharge, characteristic of most municipal and industrial wastes that are released from the submarine outfalls, the momentum of the discharge and its initial buoyancy act together to produce turbulent mixing. Initial dilution in this case is completed when the diluting wastewater ceases to rise in the water column and first begins to spread horizontally.

For shallow water submerged discharges, surface discharges, and non-buoyant discharges, characteristic of cooling water wastes and some individual discharges, turbulent mixing results primarily from the momentum of discharge. Initial dilution, in these cases, is considered to be completed when the momentum induced velocity of the discharge ceases to produce significant mixing of the waste, or the diluting plume reaches a fixed distance from the discharge to be specified by the San Diego Water Board, whichever results in the lower estimate for initial dilution.

ED_002551_00000878-00024

Instantaneous Maximum Effluent Limitation
The highest allowable value for any single grab sample or aliquot (i.e., each grab sample or aliquot is independently compared to the instantaneous maximum limitation).

Instantaneous Minimum Effluent Limitation
The lowest allowable value for any single grab sample or aliquot (i.e., each grab sample or aliquot is independently compared to the instantaneous minimum limitation).

In-stream Waste Concentration (IWC)
The concentration of a toxicant of effluent in the receiving water after mixing (the inverse of the dilution factor). A discharge of 100% effluent will be considered the IWC whenever mixing zones or dilution credits are not authorized by the applicable Water Board.

Kelp Beds
For purposes of the bacteriological standards of the Ocean Plan, kelp beds are significant aggregations of marine algae of the genera Macrocystis and Nereocystis. Kelp beds include the total foliage canopy of Macrocystis and Nereocystis plants throughout the water column.

Mariculture
The culture of plants and animals in marine waters independent of any pollution source.

Material
(a) In common usage: (1) the substance or substances of which a thing is made or composed (2) substantial; (b) For purposes of the Ocean Plan relating to waste disposal, dredging and the disposal of dredged material and fill, MATERIAL means matter of any kind or description which is subject to regulation as waste, or any material dredged from the navigable waters of the U.S. See also, DREDGED MATERIAL.

Maximum Daily Effluent Limitation (MDEL)
The highest allowable daily discharge of a pollutant.

Method Detection Limit (MDL)
The minimum concentration of a substance that can be reported with 99 percent confidence that the measured concentration is distinguishable from method blank results, as defined in 40 CFR part 136, Attachment B.

Minimum Level (ML)
The concentration at which the entire analytical system must give a recognizable signal and acceptable calibration point. The ML is the concentration in a sample that is equivalent to the concentration of the lowest calibration standard analyzed by a specific analytical procedure, assuming that all the method specified sample weights, volumes, and processing steps have been followed.

Multiport Diffusers
Linear structures consisting of spaced ports or nozzles that are installed on submerged marine outfalls and enable rapid mixing, dispersal, and dilution of brine within a relatively small area.

Natural Light
Reduction of natural light may be determined by the San Diego Water Board by measurement of light transmissivity or total irradiance, or both, according to the monitoring needs of the San Diego Water Board.

Not Detected (ND)
Those sample results less than the laboratory's MDL.

Nuisance
Water Code section 13050, subdivision (m), defines nuisance as anything which meets all of the following requirements:

ED_002551_00000878-00025

1. Is injurious to health, or is indecent or offensive to the senses, or an obstruction to the free use of property, so as to interfere with the comfortable enjoyment of life or property.
2. Affects at the same time an entire community or neighborhood, or any considerable number of persons, although the extent of the annoyance or damage inflicted upon individuals may be unequal.
3. Occurs during, or as a result of, the treatment or disposal of wastes.

Ocean Waters
The territorial marine waters of the State as defined by California law to the extent these waters are outside of enclosed bays, estuaries, and coastal lagoons. If a discharge outside the territorial waters of the State could affect the quality of the waters of the State, the discharge may be regulated to assure no violation of the Ocean Plan will occur in ocean waters.

Percent Removal
A percentage expression of the removal efficiency across a treatment plant for a given pollutant parameter, as determined from the average values of the raw wastewater influent pollutant concentrations to the facility and the average values of the effluent pollutant concentrations for a given time period.

PAHs (polynuclear aromatic hydrocarbons)
The sum of acenaphthylene, anthracene, 1,2-benzanthracene, 3,4-benzofluoranthene, benzo[k]fluoranthene, 1,12-benzoperylene, benzo[a]pyrene, chrysene, dibenzo[ah]anthracene, fluorene, indeno[1,2,3-cd]pyrene, phenanthrene and pyrene.

PCBs (polychlorinated biphenyls)
The sum of chlorinated biphenyls whose analytical characteristics resemble those of Aroclor-1016, Aroclor-1221, Aroclor-1232, Aroclor-1242, Aroclor-1248, Aroclor-1254 and Aroclor-1260.

Phenolic Compounds (non-chlorinated)
The sum of 2,4-dimethylphenol, 4,6-Dinitro-2-methylphenol, 2, 4-dinitrophenol, 2-methylphenol, 4-methylphenol, 2-nitropheneol, 4-nitrophenol, and phenol.

Pollutant
Pollutant means dredged spoil, solid waste, incinerator residue, filter backwash, sewage, garbage, sewage sludge, munitions, chemical wastes, biological materials, radioactive materials (except those regulated under the Atomic Energy Act of 1954, as amended (42 United States Code (U.S.C.) 2011 et seq.)), heat, wrecked or discarded equipment, rock, sand, cellar dirt and industrial, municipal, and agricultural waste discharged into water. It does not mean: (a) Sewage from vessels; or (b) Water, gas, or other material which is injected into a well to facilitate production of oil or gas, or water derived in association with oil and gas production and disposed of in a well, if the well used either to facilitate production or for disposal purposes is approved by authority of the State in which the well is located, and if the State determines that the injection or disposal will not result in the degradation of ground or surface water resources.

Recycled Water
Recycled water means water which, as a result of treatment of waste, is suitable for a direct beneficial use or a controlled use that would not otherwise occur and is therefore considered a valuable resource.

Reported Minimum Level (ML)
The reported ML (also known as the Reporting Level or RL) is the ML (and its associated analytical method) chosen by the Discharger for reporting and compliance determination from the MLs included in this Order, including an additional factor if applicable as discussed herein. The MLs included in this Order correspond to approved analytical methods for reporting a sample result that are selected by the San Diego Water Board either from Appendix II of the Ocean Plan in accordance with section III.C.5.a.

ED_002551_00000878-00026

of the Ocean Plan or established in accordance with section III.C.5.b. of the Ocean Plan. The ML is based on the proper application of method-based analytical procedures for sample preparation and the absence of any matrix interferences. Other factors may be applied to the ML depending on the specific sample preparation steps employed. For example, the treatment typically applied in cases where there are matrix-effects is to dilute the sample or sample aliquot by a factor of ten. In such cases, this additional factor must be applied to the ML in the computation of the reported ML.

Salinity
A measure of the dissolved salts in a volume of water. Salinity shall be measured using a standard method approved by the Regional Water Board (e.g., Standard Method 2520 B, EPA Method 120.1, EPA Method 160.1) and reported in parts per thousand. For historical salinity data not recorded in parts per thousand, the Regional Water Board may accept converted data at their discretion.

Seawater
Salt water that is in or from the ocean. For implementation of Chapter III.M of the Ocean Plan, seawater includes tidally influenced waters in coastal estuaries and coastal lagoons and underground salt water beneath the seafloor, beach, or other contiguous land with hydrologic connectivity to the ocean.

Severe Property Damage
Substantial physical damage to property, damage to the treatment facilities, which causes them to become inoperable, or substantial and permanent loss of natural resources that can reasonably be expected to occur in the absence of a bypass. Severe property damage does not mean economic loss caused by delays in production. (40 CFR section 122.41(m)(1)(ii))

Shellfish
Organisms identified by the California Department of Health Services as shellfish for public health purposes (i.e., mussels, clams and oysters).

Significant Difference
Defined as a statistically significant difference in the means of two distributions of sampling results at the 95 percent confidence level.

Six-Month Median Effluent Limitation
The highest allowable moving median of all daily discharges for any 180-day period.

Sludge
Any solid, semisolid, or liquid waste generated from a municipal, commercial, or industrial wastewater treatment plant, water supply treatment plant, or air pollution control facility or any other such waste having similar characteristics and effect.

State Water Quality Protection Areas (SWQPAs)
Non-terrestrial marine or estuarine areas designated to protect marine species or biological communities from an undesirable alteration in natural water quality. All Areas of Special Biological Significance (ASBS) that were previously designated by the State Water Board in Resolutions 74-28, 74-32, and 75-61 are now also classified as a subset of State Water Quality Protection Areas and require special protections afforded by the Ocean Plan.

ED_002551_00000878-00027

TCDD Equivalents (Tetrachlorodibenzodioxin Equivalents)
The sum of the concentrations of chlorinated dibenzodioxins (2,3,7,8-CDDs) and chlorinated dibenzofurans (2,3,7,8-CDFs) multiplied by their respective toxicity factors, as shown in the table below.

Isomer Group	Toxicity Equivalence Factor
2,3,7,8-tetra CDD	1.0
2,3,7,8-penta CDD	0.5
2,3,7,8-hexa CDDs	0.1
2,3,7,8-hepta CDD	0.01
octa CDD	0.001
2,3,7,8 tetra CDF	0.1
1,2,3,7,8 penta CDF	0.05
2,3,4,7,8 penta CDF	0.5
2,3,7,8 hexa CDFs	0.1
2,3,7,8 hepta CDFs	0.01
octa CDF	0.001

Thirty-Day Average
See 30-day average above for definition of this term.

Toxicity Identification Evaluation (TIE)
A set of procedures conducted to identify the specific chemical(s) responsible for toxicity. These procedures are performed in three phases (characterization, identification, and confirmation) using aquatic organism toxicity tests.

Toxicity Reduction Evaluation (TRE)
A study conducted in a step-wise process designed to identify the causative agents of effluent or ambient toxicity, isolate the sources of toxicity, evaluate the effectiveness of toxicity control options, and then confirm the reduction in toxicity. The first steps of the TRE consist of the collection of data relevant to the toxicity, including additional toxicity testing, and an evaluation of facility operations and maintenance practices, and best management practices. A TIE may be required as part of the TRE, if appropriate.

Trash
Trash means all improperly discarded solid material from any production, manufacturing, or processing operation including, but not limited to, products, product packaging, or containers constructed of plastic, steel, aluminum, glass, paper, or other synthetic or natural materials.

Waste
As used in the Ocean Plan, waste includes a Discharger's total discharge, of whatever origin, i.e., gross, not net, discharge.

Water Quality Control Plans
There are two types of water quality control plans - Basin Plans and Statewide Plans. Regional Boards adopt Basin Plans for each region based upon surface water hydrologic basin boundaries. The Regional Basin Plans designates or describes (1) existing and potential beneficial uses of ground and surface water; (2) water quality objectives to protect the beneficial uses; (3) implementation programs to achieve these objectives; and (4) surveillance and monitoring activities to evaluate the effectiveness of the water quality control plan. The Statewide Plans address water quality concerns for surface waters that overlap Regional Board boundaries, are statewide in scope, or are otherwise considered

ED_002551_00000878-00028

significant and contain the same four elements. Statewide Water Quality Control Plans include the Ocean Plan, the Enclosed Bays and Estuaries Plan, the Inland Surface Waters Plan, and the Thermal Plan. A water quality control plan consists of a designation or establishment for the waters within a specified area of (1) beneficial uses to be protected, (2) water quality objectives, and (3) a program of implementation needed for achieving water quality objectives [California Water Code section 13050(j)].

Water Quality Objectives
Numerical or narrative limits on constituents or characteristics of water designed to protect designated beneficial uses of the water. [California Water Code section 13050(h)]. California's water quality objectives are established by the State and Regional Water Boards in the Water Quality Control Plans.

Water Quality Standards
Provisions of State or federal law which consist of a designated use or uses for waters of the United States and water quality criteria for such waters based upon such uses. Water quality standards are to protect the public health or welfare, enhance the quality of water and serve the purposes of the Clean Water Act [40 CFR section 131.3(i)]. Under State law, the Water Boards establish beneficial uses and water quality objectives in their water quality control plans or basin plans. Together with an antidegradation policy, these beneficial uses and water quality objectives serve as water quality standards under the Clean Water Act. In Clean Water Act parlance, state beneficial uses are called “designated uses” and state water quality objectives are called “criteria.” Throughout this Order, the relevant term is used depending on the statutory scheme.

ED_002551_00000878-00029

ATTACHMENT B – MAP

Facility Location

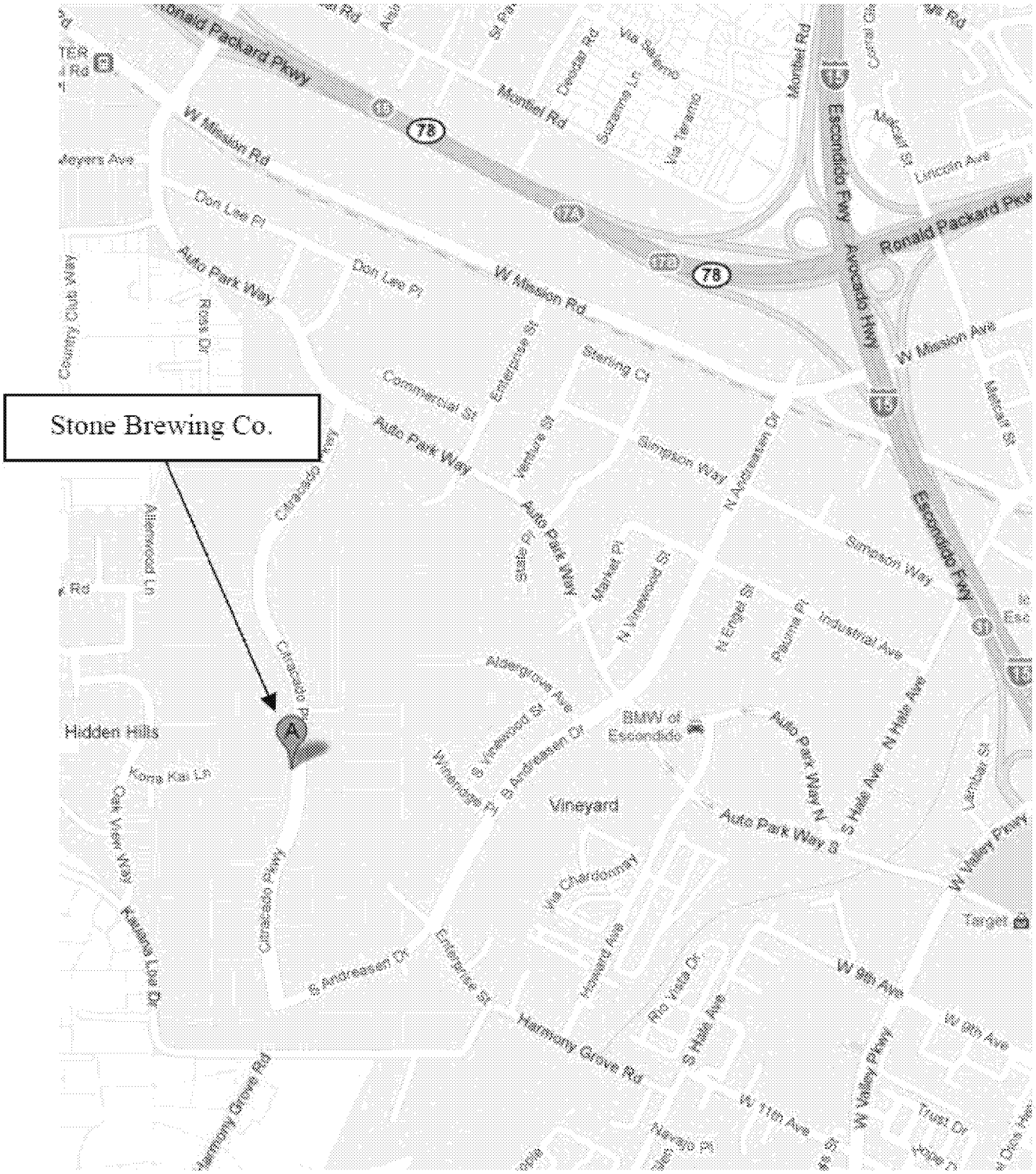

ATTACHMENT C – FLOW SCHEMATIC

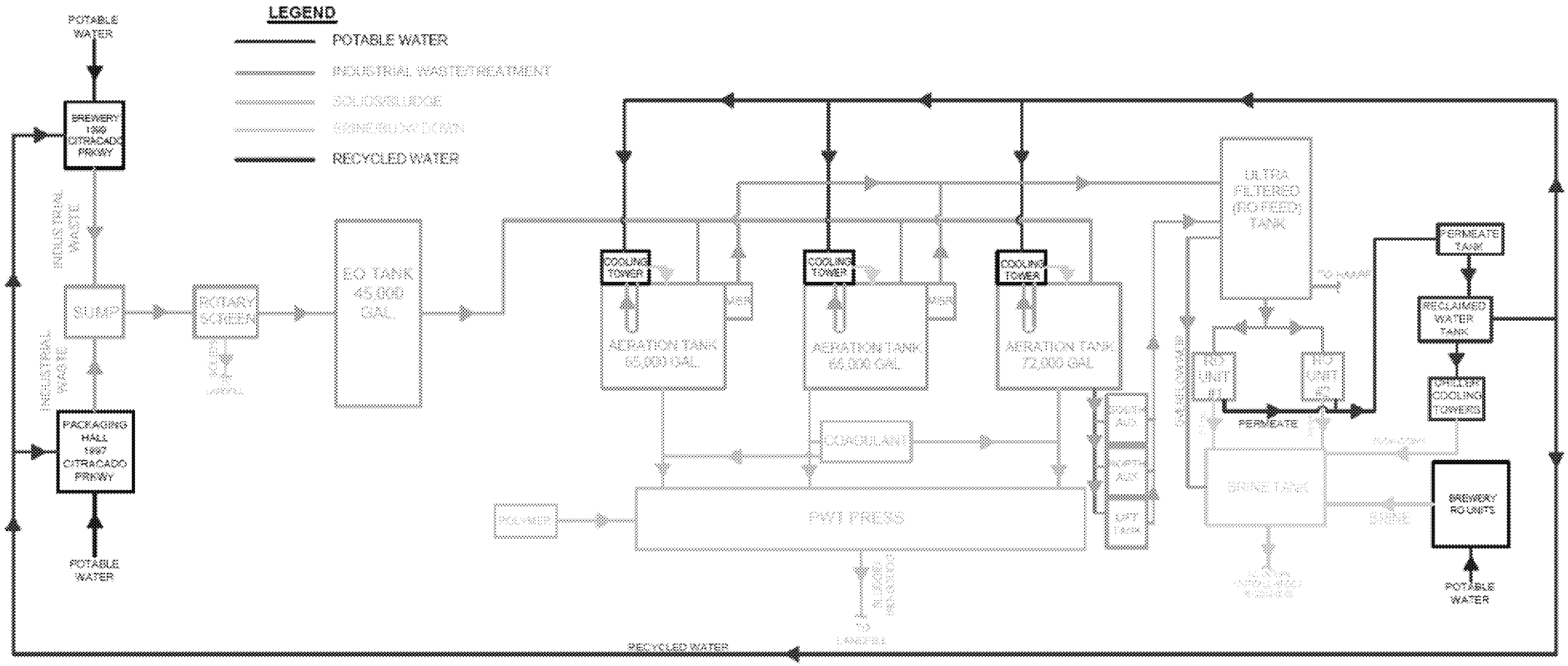

ATTACHMENT D – STANDARD PROVISIONS

I. STANDARD PROVISIONS – PERMIT COMPLIANCE

A. Duty to Comply

1. The Discharger must comply with all of the terms, requirements, and conditions of this Order. Any noncompliance constitutes a violation of the Clean Water Act (CWA) and the California Water Code (Water Code) and is grounds for enforcement action; permit termination, revocation and reissuance, or modification; denial of a permit renewal application; or a combination thereof. (40 CFR sections 122.41(a); Water Code, sections 13261, 13263, 13265, 13268, 13000, 13001, 13304, 13350, 13385.)

2. The Discharger shall comply with effluent standards or prohibitions established under Section 307(a) of the CWA for toxic pollutants within the time provided in the regulations that establish these standards or prohibitions, even if this Order has not yet been modified to incorporate the requirement. (40 CFR section 122.41(a)(1).)

B. Need to Halt or Reduce Activity Not a Defense

It shall not be a defense for a Discharger in an enforcement action that it would have been necessary to halt or reduce the permitted activity in order to maintain compliance with the conditions of this Order. (40 CFR section 122.41(c).)

C. Duty to Mitigate

The Discharger shall take all reasonable steps to minimize or prevent any discharge or sludge use or disposal in violation of this Order that has a reasonable likelihood of adversely affecting human health or the environment. (40 CFR section 122.41(d).)

D. Proper Operation and Maintenance

The Discharger shall at all times properly operate and maintain all facilities and systems of treatment and control (and related appurtenances) which are installed or used by the Discharger to achieve compliance with the conditions of this Order. Proper operation and maintenance also includes adequate laboratory controls and appropriate quality assurance procedures. This provision requires the operation of backup or auxiliary facilities or similar systems that are installed by a Discharger only when necessary to achieve compliance with the conditions of this Order. (40 CFR section 122.41(e).)

E. Property Rights

1. This Order does not convey any property rights of any sort or any exclusive privileges. (40 CFR section 122.41(g).)

2. The issuance of this Order does not authorize any injury to persons or property or invasion of other private rights, or any infringement of State or local law or regulations. (40 CFR section 122.5(c).)

F. Inspection and Entry

The Discharger shall allow the California Regional Water Quality Control Board, San Diego Region (San Diego Water Board), State Water Resources Control Board (State Water Board), U.S. Environmental Protection Agency (USEPA), and/or their authorized representatives (including an authorized contractor acting as their representative), upon the presentation of credentials and other documents, as may be required by law, to (33 United States Code

ED_002551_00000878-00032

(U.S.C.) section 1318(a)(4)(b); 40 CFR section 122.41(i); Water Code, sections 13267, 13383):

1. Enter upon the Discharger's premises where a regulated facility or activity is located or conducted, or where records are kept under the conditions of this Order (33 U.S.C. section 1318(a)(4)(b)(i); 40 CFR section 122.41(i)(1); Water Code, sections 13267, 13383);
2. Have access to and copy, at reasonable times, any records that must be kept under the conditions of this Order (33 U.S.C. section 1318(a)(4)(b)(ii); 40 CFR section 122.41(i)(2); Water Code, sections 13267, 13383);
3. Inspect and photograph, at reasonable times, any facilities, equipment (including monitoring and control equipment), practices, or operations regulated or required under this Order (33 U.S.C. section 1318(a)(4)(b)(ii); 40 CFR section 122.41(i)(3); Water Code, sections 13267, 13383); and
4. Sample or monitor, at reasonable times, for the purposes of assuring Order compliance or as otherwise authorized by the CWA or the Water Code, any substances or parameters at any location. (33 U.S.C. section 1318(a)(4)(b); 40 CFR section 122.41(i)(4); Water Code, sections 13267, 13383.)

G. Bypass

1. Definitions
   a. "Bypass" means the intentional diversion of waste streams from any portion of a treatment facility. (40 CFR section 122.41(m)(1)(i).)
   b. "Severe property damage" means substantial physical damage to property, damage to the treatment facilities, which causes them to become inoperable, or substantial and permanent loss of natural resources that can reasonably be expected to occur in the absence of a bypass. Severe property damage does not mean economic loss caused by delays in production. (40 CFR section 122.41(m)(1)(ii).)
2. Bypass not exceeding limitations. The Discharger may allow any bypass to occur which does not cause exceedances of effluent limitations, but only if it is for essential maintenance to assure efficient operation. These bypasses are not subject to the provisions listed in Standard Provisions – Permit Compliance I.G.3, I.G.4, and I.G.5 below. (40 CFR section 122.41(m)(2).)
3. Prohibition of bypass. Bypass is prohibited, and the San Diego Water Board may take enforcement action against a Discharger for bypass, unless (40 CFR section 122.41(m)(4)(i)):
   a. Bypass was unavoidable to prevent loss of life, personal injury, or severe property damage (40 CFR section 122.41(m)(4)(i)(A));
   b. There were no feasible alternatives to the bypass, such as the use of auxiliary treatment facilities, retention of untreated wastes, or maintenance during normal periods of equipment downtime. This condition is not satisfied if adequate back-up equipment should have been installed in the exercise of reasonable engineering judgment to prevent a bypass that occurred during normal periods of equipment downtime or preventive maintenance (40 CFR section 122.41(m)(4)(i)(B)); and
   c. The Discharger submitted notice to the San Diego Water Board as required under Standard Provisions – Permit Compliance I.G.5 below. (40 CFR section 122.41(m)(4)(i)(C).)

ED_002551_00000878-00033

4. The San Diego Water Board may approve an anticipated bypass, after considering its adverse effects, if the San Diego Water Board determines that it will meet the three conditions listed in Standard Provisions – Permit Compliance I.G.3 above. (40 CFR section 122.41(m)(4)(ii).)

5. Notice

   a. Anticipated bypass. If the Discharger knows in advance of the need for a bypass, it shall submit prior notice, if possible at least 10 days before the date of the bypass. The notice shall be sent to the San Diego Water Board. (40 CFR section 122.41(m)(3)(i).)

   b. Unanticipated bypass. The Discharger shall submit a notice of an unanticipated bypass as required in Standard Provisions - Reporting V.E below (24-hour notice). The notice shall be sent to the San Diego Water Board. (40 CFR section 122.41(m)(3)(ii).)

H. Upset

Upset means an exceptional incident in which there is unintentional and temporary noncompliance with technology based permit effluent limitations because of factors beyond the reasonable control of the Discharger. An upset does not include noncompliance to the extent caused by operational error, improperly designed treatment facilities, inadequate treatment facilities, lack of preventive maintenance, or careless or improper operation. (40 CFR section 122.41(n)(1).)

1. Effect of an upset. An upset constitutes an affirmative defense to an action brought for noncompliance with such technology based permit effluent limitations if the requirements of Standard Provisions – Permit Compliance I.H.2 below are met. No determination made during administrative review of claims that noncompliance was caused by upset, and before an action for noncompliance, is final administrative action subject to judicial review. (40 CFR section 122.41(n)(2).)

2. Conditions necessary for a demonstration of upset. A Discharger who wishes to establish the affirmative defense of upset shall demonstrate, through properly signed, contemporaneous operating logs or other relevant evidence that (40 CFR section 122.41(n)(3)):

   a. An upset occurred and that the Discharger can identify the cause(s) of the upset (40 CFR section 122.41(n)(3)(i));

   b. The permitted facility was, at the time, being properly operated (40 CFR section 122.41(n)(3)(ii));

   c. The Discharger submitted notice of the upset as required in Standard Provisions – Reporting V.E.2.b below (24-hour notice) (40 CFR section 122.41(n)(3)(iii)); and

   d. The Discharger complied with any remedial measures required under Standard Provisions – Permit Compliance I.C above. (40 CFR section 122.41(n)(3)(iv).)

3. Burden of proof. In any enforcement proceeding, the Discharger seeking to establish the occurrence of an upset has the burden of proof. (40 CFR section 122.41(n)(4).)

ED_002551_00000878-00034

II. STANDARD PROVISIONS – PERMIT ACTION

A. General

This Order may be modified, revoked and reissued, or terminated for cause. The filing of a request by the Discharger for modification, revocation and reissuance, or termination, or a notification of planned changes or anticipated noncompliance does not stay any Order condition. (40 CFR section 122.41(f).)

B. Duty to Reapply

If the Discharger wishes to continue an activity regulated by this Order after the expiration date of this Order, the Discharger must apply for and obtain a new permit. (40 CFR section 122.41(b).)

C. Transfers

This Order is not transferable to any person except after notice to the San Diego Water Board. The San Diego Water Board may require modification or revocation and reissuance of the Order to change the name of the Discharger and incorporate such other requirements as may be necessary under the CWA and the Water Code. (40 CFR sections 122.41(l)(3), 122.61.)

III. STANDARD PROVISIONS – MONITORING

A. Samples and measurements taken for the purpose of monitoring shall be representative of the monitored activity. (40 CFR section 122.41(j)(1).)

B. Monitoring must be conducted according to test procedures approved under 40 CFR part 136 for the analyses of pollutants unless another method is required under 40 CFR chapter 1, subchapters N or O. Monitoring must be conducted according to sufficiently sensitive test methods approved under 40 CFR part 136 for the analysis of pollutants or pollutant parameters or as required under 40 CFR chapter 1, subchapter N or O. For the purposes of this paragraph, a method is sufficiently sensitive when:

1. The method minimum level (ML) is at or below the level of the most stringent effluent limitation established in the permit for the measured pollutant or pollutant parameter, and either the method ML is at or below the level of the most stringent applicable water quality criterion for the measured pollutant or pollutant parameter or the method ML is above the applicable water quality criterion but the amount of the pollutant or pollutant parameter in the facility's discharge is high enough that the method detects and quantifies the level of the pollutant or pollutant parameter in the discharge; or

2. The method has the lowest ML of the analytical methods approved under 40 CFR part 136 or required under 40 CFR chapter 1, subchapter N or O for the measured pollutant or pollutant parameter.

   In the case of pollutants or pollutant parameters for which there are no approved methods under 40 CFR part 136 or otherwise required under 40 CFR chapter 1, subchapters N or O, monitoring must be conducted according to a test procedure specified in this Order for such pollutants or pollutant parameters. (40 CFR sections 122.21(e)(3), 122.41(j)(4), 122.44(i)(1)(iv).)

IV. STANDARD PROVISIONS – RECORDS

A. The Discharger shall retain records of all monitoring information, including all calibration and maintenance records and all original strip chart recordings for continuous monitoring instrumentation, copies of all reports required by this Order, and records of all data used to complete the application for this Order, for a period of at least three (3) years from the date of the sample, measurement, report or application. This period may be extended by request of the San Diego Water Board Executive Officer at any time. (40 CFR section 122.41(j)(2).)

B. Records of monitoring information shall include:

1. The date, exact place, and time of sampling or measurements (40 CFR section 122.41(j)(3)(i));
2. The individual(s) who performed the sampling or measurements (40 CFR section 122.41(j)(3)(ii));
3. The date(s) analyses were performed (40 CFR section 122.41(j)(3)(iii));
4. The individual(s) who performed the analyses (40 CFR section 122.41(j)(3)(iv));
5. The analytical techniques or methods used (40 CFR section 122.41(j)(3)(v)); and
6. The results of such analyses. (40 CFR section 122.41(j)(3)(vi).)

C. Claims of confidentiality for the following information will be denied (40 CFR section 122.7(b)):

1. The name and address of any permit applicant or Discharger (40 CFR section 122.7(b)(1)); and
2. Permit applications and attachments, permits and effluent data. (40 CFR section 122.7(b)(2).)

V. STANDARD PROVISIONS – REPORTING

A. Duty to Provide Information

The Discharger shall furnish to the San Diego Water Board, State Water Board, or USEPA within a reasonable time, any information which the San Diego Water Board, State Water Board, or USEPA may request to determine whether cause exists for modifying, revoking and reissuing, or terminating this Order or to determine compliance with this Order. Upon request, the Discharger shall also furnish to the San Diego Water Board, State Water Board, or USEPA copies of records required to be kept by this Order. (40 CFR section 122.41(h); Water Code, sections 13267, 13383.)

B. Signatory and Certification Requirements

1. All applications, reports, or information submitted to the San Diego Water Board, State Water Board, and/or USEPA shall be signed and certified in accordance with Standard Provisions – Reporting V.B.2, V.B.3, V.B.4, V.B.5, and V.B.6 below. (40 CFR section 122.41(k).)
2. All permit applications shall be signed by either a principal executive officer or ranking elected official. For purposes of this provision, a principal executive officer of a federal agency includes: (i) the chief executive officer of the agency, or (ii) a senior executive officer having responsibility for the overall operations of a principal geographic unit of the agency (e.g., Regional Administrators of USEPA). (40 CFR section 122.22(a)(3).).
3. All reports required by this Order and other information requested by the San Diego Water Board, State Water Board, or USEPA shall be signed by a person described in

ED_002551_00000878-00036