**Composite Sample**
A composite sample is defined as a combination of at least eight sample aliquots of at least 100 ml, collected at periodic intervals during the operating hours of a. facility over a 24-hour period. For volatile pollutants, aliquots must be combined in the laboratory immediately before analysis. The composite must be flow proportional; either the time interval between each aliquot or the volume of each aliquot must be proportional to either the stream flow at the time of sampling or the total stream flow since the collection of the previous aliquot. Aliquots may be collected manually or automatically. The 100 ml minimum volume of an aliquot does not apply to automatic self-purging samplers. If one day is defined as a 24-hour period other than a calendar day, the analytical result for the 24-hour period will be considered as the result for the calendar day in which the 24-hour period ends.

**Daily Discharge**
Daily Discharge is defined as either: (1) the total mass of the constituent discharged over the calendar day (12:00 am through 11:59 pm) or any 24-hour period that reasonably represents a calendar day for purposes of sampling (as specified in the permit), for a constituent with limitations expressed in units of mass; or (2) the unweighted arithmetic mean measurement of the constituent over the day for a constituent with limitations expressed in other units of measurement (e.g., concentration).

The daily discharge may be determined by the analytical results of a composite sample taken over the course of one day (a calendar day or other 24-hour period defined as a day) or by the arithmetic mean of analytical results from one or more grab samples taken over the course of the day.

A composite sample is defined as a combination of at least eight sample aliquots of at least 100 ml, collected at periodic intervals during the operating hours of a. facility over a 24-hour period. For volatile pollutants, aliquots must be combined in the laboratory immediately before analysis. The composite must be flow proportional; either the time interval between each aliquot or the volume of each aliquot must be proportional to either the stream flow at the time of sampling or the total stream flow since the collection of the previous aliquot. Aliquots may be collected manually or automatically. The 100 ml minimum volume of an aliquot does not apply to automatic self-purging samplers. If one day is defined as a 24-hour period other than a calendar day, the analytical result for the 24-hour period will be considered as the result for the calendar day in which the 24-hour period ends.

A grab sample is an individual sample of at least 100 ml collected at a randomly selected time over a period not exceeding 15 minutes.

**Degrade**
Degradation shall be determined by comparison of the waste field and reference site(s) for characteristic species diversity, population density, contamination, growth anomalies, debility, or supplanting of normal species by undesirable plant and animal species. Degradation occurs if there are significant differences in any of three major biotic groups, namely, demersal fish, benthic invertebrates, or attached algae. Other groups may be evaluated where benthic species are not affected, or are not the only ones affected.

**Detected, but Not Quantified (DNQ)**
Sample results that are less than the reported ML, but greater than or equal to the laboratory's MDL. Sample results reported as DNQ are estimated concentrations.

**Dichlorobenzenes**
Shall mean the sum of 1,2- and 1,3-dichlorobenzene.



ED_002551_00000748-00040

**Dichlorodiphenyltrichloroethane (DDT)**
Shall mean the sum of 4,4'DDT, 2,4'DDT, 4,4'DDE, 2,4'DDE, 4,4'DDD, and 2,4'DDD.

**Discharge**
Discharge of a pollutant means: (a) Any addition of any "pollutant" or combination of pollutants to "waters of the United States" from any "point source," or (b) Any addition of any pollutant or combination of pollutants to the waters of the "contiguous zone" or the ocean from any point source other than a vessel or other floating craft which is being used as a means of transportation. This definition includes additions of pollutants into waters of the United States from: surface runoff which is collected or channelled by man; discharges through pipes, sewers, or other conveyances owned by a State, municipality, or other person which do not lead to a treatment works; and discharges through pipes, sewers, or other conveyances, leading into privately owned treatment works. This term does not include an addition of pollutants by any "indirect discharger."

**Discharge Monitoring Reports (DMRs)**
The DMRs means the U.S. Environmental Protection Agency (USEPA) uniform national form, including any subsequent additions, revisions, or modifications for the reporting of self-monitoring results by permittees. DMRs must be used by "approved States" as well as by USEPA. USEPA will supply DMRs to any approved State upon request. The USEPA national forms may be modified to substitute the State agency name, address, logo, and other similar information, as appropriate, in place of USEPA's.

**Downstream Ocean Waters**
Waters downstream with respect to ocean currents.

**Dredged Material**
Any material excavated or dredged from the navigable waters of the U.S., including material otherwise referred to as "spoil."

**Enclosed Bays**
Indentations along the coast that enclose an area of oceanic water within distinct headlands or harbor works. Enclosed bays include all bays where the narrowest distance between headlands or outermost harbor works is less than 75 percent of the greatest dimension of the enclosed portion of the bay. This definition includes but is not limited to: Humboldt Bay, Bodega Harbor, Tomales Bay, Drakes Estero, San Francisco Bay, Morro Bay, Los Angeles Harbor, Upper and Lower Newport Bay, Mission Bay, and San Diego Bay.

**Endosulfan**
The sum of endosulfan-alpha and -beta and endosulfan sulfate.

**Estuaries and Coastal Lagoons**
Estuaries and Coastal Lagoons are waters at the mouths of streams that serve as mixing zones for fresh and ocean waters during a major portion of the year. Mouths of streams that are temporarily separated from the ocean by sandbars shall be considered as estuaries. Estuarine waters will generally be considered to extend from a bay or the open ocean to the upstream limit of tidal action but may be considered to extend seaward if significant mixing of fresh and salt water occurs in the open coastal waters. The waters described by this definition include but are not limited to the Sacramento-San Joaquin Delta as defined by section 12220 of the Water Code, Suisun Bay, Carquinez Strait downstream to Carquinez Bridge, and appropriate areas of the Smith, Klamath, Mad, Eel, Noyo, and Russian Rivers.



ED_002551_00000748-00041

**Facilities**
The Encina Water Pollution Control Facility (EWPCF), the Meadowlark Water Reclamation Plant (MWRP), the Carlsbad Water Reclamation Facility (CWRF), the land outfall for the MWRP, and the Encina Ocean Outfall (EOO)

**Halomethanes**
The mean the sum of bromoform, bromomethane (methyl bromide) and chloromethane (methyl chloride).

**HCH**
The mean the sum of the alpha, beta, gamma (lindane) and delta isomers of hexachlorocyclohexane.

**Initial Dilution**
The process that results in the rapid and irreversible turbulent mixing of wastewater with ocean water around the point of discharge.

For a submerged buoyant discharge, characteristic of most municipal and industrial wastes that are released from the submarine outfalls, the momentum of the discharge and its initial buoyancy act together to produce turbulent mixing. Initial dilution in this case is completed when the diluting wastewater ceases to rise in the water column and first begins to spread horizontally.

For shallow water submerged discharges, surface discharges, and non-buoyant discharges, characteristic of cooling water wastes and some individual discharges, turbulent mixing results primarily from the momentum of discharge. Initial dilution, in these cases, is considered to be completed when the momentum induced velocity of the discharge ceases to produce significant mixing of the waste, or the diluting plume reaches a fixed distance from the discharge to be specified by the San Diego Water Board, whichever results in the lower estimate for initial dilution.

**Instantaneous Maximum Effluent Limitation**
The highest allowable value for any single grab sample or aliquot (i.e., each grab sample or aliquot is independently compared to the instantaneous maximum limitation).

**Instantaneous Minimum Effluent Limitation**
The lowest allowable value for any single grab sample or aliquot (i.e., each grab sample or aliquot is independently compared to the instantaneous minimum limitation).

**In-stream Waste Concentration (IWC)**
The concentration of a toxicant of effluent in the receiving water after mixing (the inverse of the dilution factor). A discharge of 100% effluent will be considered the IWC whenever mixing zones or dilution credits are not authorized by the applicable Water Board.

**Interference**
A discharge which, alone or in conjunction with a discharge or discharges from other sources, both:

(1) Inhibits or disrupts the POTW, its treatment processes or operations, or its sludge processes, use or disposal; and

(2) Therefore is a cause of a violation of any requirement of the POTW's NPDES permit (including an increase in the magnitude or duration of a violation) or of the prevention of sewage sludge use or disposal in compliance with the following statutory provisions and regulations or permits issued thereunder (or more stringent State or local regulations): Section 405 of the CWA, the Solid Waste Disposal Act (SWDA) (including title II, more commonly referred to as the Resource Conservation and Recovery Act (RCRA), and including State regulations contained in any State sludge management plan prepared pursuant to subtitle D of the SWDA), the Clean Air Act, the Toxic Substances Control Act, and the Marine Protection, Research and Sanctuaries Act.



ED_002551_00000748-00042

**Kelp Beds**
For purposes of the bacteriological standards of the Ocean Plan, kelp beds are significant aggregations of marine algae of the genera Macrocystis and Nereocystis. Kelp beds include the total foliage canopy of Macrocystis and Nereocystis plants throughout the water column.

**Mariculture**
The culture of plants and animals in marine waters independent of any pollution source.

**Material**
(a) In common usage: (1) the substance or substances of which a thing is made or composed (2) substantial; (b) For purposes of the Ocean Plan relating to waste disposal, dredging and the disposal of dredged material and fill, MATERIAL means matter of any kind or description which is subject to regulation as waste, or any material dredged from the navigable waters of the U.S.. See also, DREDGED MATERIAL.

**Maximum Daily Effluent Limitation (MDEL)**
The highest allowable daily discharge of a pollutant.

**Method Detection Limit (MDL)**
The minimum concentration of a substance that can be reported with 99 percent confidence that the measured concentration is distinguishable from method blank results, as defined in 40 CFR part 136, Attachment B.

**Minimum Level (ML)**
The concentration at which the entire analytical system must give a recognizable signal and acceptable calibration point. The ML is the concentration in a sample that is equivalent to the concentration of the lowest calibration standard analyzed by a specific analytical procedure, assuming that all the method specified sample weights, volumes, and processing steps have been followed.

**Natural Light**
Reduction of natural light may be determined by the San Diego Water Board by measurement of light transmissivity or total irradiance, or both, according to the monitoring needs of the San Diego Water Board.

**Not Detected (ND)**
Those sample results less than the laboratory's MDL.

**Ocean Waters**
The territorial marine waters of the State as defined by California law to the extent these waters are outside of enclosed bays, estuaries, and coastal lagoons. If a discharge outside the territorial waters of the State could affect the quality of the waters of the State, the discharge may be regulated to assure no violation of the Ocean Plan will occur in ocean waters.

**Pass Through**
A discharge which exits the POTW into waters of the U.S. in quantities or concentrations which, alone or in conjunction with a discharge or discharges from other sources, is a cause of a violation of any requirement of the POTW's NPDES permit (including an increase in the magnitude or duration of a violation).

**Percent Removal**
A percentage expression of the removal efficiency across a treatment plant for a given pollutant parameter, as determined from the average values of the raw wastewater influent pollutant concentrations to the facility and the average values of the effluent pollutant concentrations for a given time period.



ED_002551_00000748-00043

**PAHs (polynuclear aromatic hydrocarbons)**
The sum of acenaphthylene, anthracene, 1,2-benzanthracene, 3,4-benzofluoranthene, benzo[k]fluoranthene, 1,12-benzoperylene, benzo[a]pyrene, chrysene, dibenzo[ah]anthracene, fluorene, indeno[1,2,3-cd]pyrene, phenanthrene and pyrene.

**PCBs (polychlorinated biphenyls)**
The sum of chlorinated biphenyls whose analytical characteristics resemble those of Aroclor-1016, Aroclor-1221, Aroclor-1232, Aroclor-1242, Aroclor-1248, Aroclor-1254 and Aroclor-1260.

**Phenolic Compounds (non-chlorinated)**
The sum of 2,4-dimethylphenol, 4,6-Dinitro-2-methylphenol, 2,4-dinitrophenol, 2-methylphenol, 4-methylphenol, 2-nitropheneol, 4-nitrophenol, and phenol.

**Pollutant**
Pollutant means dredged spoil, solid waste, incinerator residue, filter backwash, sewage, garbage, sewage sludge, munitions, chemical wastes, biological materials, radioactive materials (except those regulated under the Atomic Energy Act of 1954, as amended (42 U.S.C. 2011 et seq.)), heat, wrecked or discarded equipment, rock, sand, cellar dirt and industrial, municipal, and agricultural waste discharged into water. It does not mean: (a) Sewage from vessels; or (b) Water, gas, or other material which is injected into a well to facilitate production of oil or gas, or water derived in association with oil and gas production and disposed of in a well, if the well used either to facilitate production or for disposal purposes is approved by authority of the State in which the well is located, and if the State determines that the injection or disposal will not result in the degradation of ground or surface water resources.

**Pollutant Minimization Program (PMP)**
PMP means waste minimization and pollution prevention actions that include, but are not limited to, product substitution, waste stream recycling, alternative waste management methods, and education of the public and businesses. The goal of the PMP shall be to reduce all potential sources of Ocean Plan Table 1 pollutants through pollutant minimization (control) strategies, including pollution prevention measures as appropriate, to maintain the effluent concentration at or below the water quality-based effluent limitations. Pollution prevention measures may be particularly appropriate for persistent bioaccumulative priority pollutants where there is evidence that beneficial uses are being impacted. The San Diego Water Board may consider cost effectiveness when establishing the requirements of a PMP. The completion and implementation of a Pollution Prevention Plan (PPP), if required pursuant to Water Code section 13263.3(d), shall be considered to fulfill the PMP requirements.

**Recycled Water**
Recycled water means water which, as a result of treatment of waste, is suitable for a direct beneficial use or a controlled use that would not otherwise occur and is therefore considered a valuable resource.

**Reported Minimum Level**
The reported ML (also known as the Reporting Level or RL) is the ML (and its associated analytical method) chosen by the Discharger for reporting and compliance determination from the MLs included in this Order, including an additional factor if applicable as discussed herein. The MLs included in this Order correspond to approved analytical methods for reporting a sample result that are selected by the San Diego Water Board either from Appendix II of the Ocean Plan in accordance with section III.C.5.a. of the Ocean Plan or established in accordance with section III.C.5.b. of the Ocean Plan. The ML is based on the proper application of method-based analytical procedures for sample preparation and the absence of any matrix interferences. Other factors may be applied to the ML depending on the specific sample preparation steps employed. For example, the treatment typically applied in cases where there are matrix-effects is to dilute the sample or sample aliquot by a factor of ten. In such cases, this additional factor must be applied to the ML in the computation of the reported ML.



ED_002551_00000748-00044

**Sanitary Sewer Overflow (SSO)**
An SSO is any overflow, spill, release, discharge or diversion of untreated or partially treated wastewater from a sanitary sewer system. SSOs include: (i) Overflows or releases of untreated or partially treated wastewater that reach waters of the United States; (ii) Overflows or releases of untreated or partially treated wastewater that do not reach waters of the United States; and (iii) Wastewater backups into buildings and on private property that are caused by blockages or flow conditions within the publicly owned portion of a sanitary sewer system.

**Sanitary Sewer System**
Any system of pipes, pump stations, sewer lines, or other conveyances, upstream of a wastewater treatment plant headworks used to collect and convey wastewater to the publicly owned treatment facility. Temporary storage and conveyance facilities (such as vaults, temporary piping, construction trenches, wet wells, impoundments, tanks, etc.) are considered to be part of the sanitary sewer system, and discharges into these temporary storage facilities are not considered to be SSOs.

**Severe Property Damage**
Substantial physical damage to property, damage to the treatment facilities, which causes them to become inoperable, or substantial and permanent loss of natural resources that can reasonably be expected to occur in the absence of a bypass. Severe property damage does not mean economic loss caused by delays in production. (40 CFR section 122.41(m)(1)(ii))

**Shellfish**
Organisms identified by the California Department of Health Services as shellfish for public health purposes (i.e., mussels, clams and oysters).

**Significant Difference**
Defined as a statistically significant difference in the means of two distributions of sampling results at the 95 percent confidence level.

**Six-Month Median Effluent Limitation**
The highest allowable moving median of all daily discharges for any 180-day period.

**Sludge**
Any solid, semisolid, or liquid waste generated from a municipal, commercial, or industrial wastewater treatment plant, water supply treatment plant, or air pollution control facility or any other such waste having similar characteristics and effect.

**State Water Quality Protection Areas (SWQPAs)**
Non-terrestrial marine or estuarine areas designated to protect marine species or biological communities from an undesirable alteration in natural water quality. All AREAS OF SPECIAL BIOLOGICAL SIGNIFICANCE (ASBS) that were previously designated by the State Water Board in Resolutions 74-28, 74-32, and 75-61 are now also classified as a subset of State Water Quality Protection Areas and require special protections afforded by the Ocean Plan.



ED_002551_00000748-00045

**TCDD Equivalents**
The sum of the concentrations of chlorinated dibenzodioxins (2,3,7,8-CDDs) and chlorinated dibenzofurans (2,3,7,8-CDFs) multiplied by their respective toxicity factors, as shown in the table below.

| Isomer Group | Toxicity Equivalence Factor |
|---|---|
| 2,3,7,8-tetra CDD | 1.0 |
| 2,3,7,8-penta CDD | 0.5 |
| 2,3,7,8-hexa CDDs | 0.1 |
| 2,3,7,8-hepta CDD | 0.01 |
| octa CDD | 0.001 |
| 2,3,7,8 tetra CDF | 0.1 |
| 1,2,3,7,8 penta CDF | 0.05 |
| 2,3,4,7,8 penta CDF | 0.5 |
| 2,3,7,8 hexa CDFs | 0.1 |
| 2,3,7,8 hepta CDFs | 0.01 |
| octa CDF | 0.001 |

**Thirty-Day Average**
See 30-day average above for definition of this term.

**Toxicity Identification Evaluation (TIE)**
A set of procedures conducted to identify the specific chemical(s) responsible for toxicity. These procedures are performed in three phases (characterization, identification, and confirmation) using aquatic organism toxicity tests.

**Toxicity Reduction Evaluation (TRE)**
A study conducted in a step-wise process designed to identify the causative agents of effluent or ambient toxicity, isolate the sources of toxicity, evaluate the effectiveness of toxicity control options, and then confirm the reduction in toxicity. The first steps of the TRE consist of the collection of data relevant to the toxicity, including additional toxicity testing, and an evaluation of facility operations and maintenance practices, and best management practices. A TIE may be required as part of the TRE, if appropriate.

**Trash**
Trash means all improperly discarded solid material from any production, manufacturing, or processing operation including, but not limited to, products, product packaging, or containers constructed of plastic, steel, aluminum, glass, paper, or other synthetic or natural materials.

**Waste**
As used in the Ocean Plan, waste includes a Discharger's total discharge, of whatever origin, i.e., gross, not net, discharge.



ED_002551_00000748-00046

**Water Quality Control Plans**
There are two types of water quality control plans - Basin Plans and Statewide Plans. Regional Boards adopt Basin Plans for each region based upon surface water hydrologic basin boundaries. The Regional Basin Plans designates or describes (1) existing and potential beneficial uses of ground and surface water; (2) water quality objectives to protect the beneficial uses; (3) implementation programs to achieve these objectives; and (4) surveillance and monitoring activities to evaluate the effectiveness of the water quality control plan. The Statewide Plans address water quality concerns for surface waters that overlap Regional Board boundaries, are statewide in scope, or are otherwise considered significant and contain the same four elements. Statewide Water Quality Control Plans include the Ocean Plan, the Enclosed Bays and Estuaries Plan, the Inland Surface Waters Plan, and the Thermal Plan. A water quality control plan consists of a designation or establishment for the waters within a specified area of (1) beneficial uses to be protected, (2) water quality objectives, and (3) a program of implementation needed for achieving water quality objectives [Water Code section 13050(j)].

**Water Quality Objectives**
Numerical or narrative limits on constituents or characteristics of water designed to protect designated beneficial uses of the water. [Water Code section 13050(h)]. California's water quality objectives are established by the State and Regional Water Boards in the Water Quality Control Plans.

**Water Quality Standards**
Provisions of State or federal law which consist of a designated use or uses for waters of the United States and water quality criteria for such waters based upon such uses. Water quality standards are to protect the public health or welfare, enhance the quality of water and serve the purposes of the Clean Water Act [40 CFR section 131.3(i)]. Under State law, the Water Boards establish beneficial uses and water quality objectives in their water quality control plans or basin plans. Together with an antidegradation policy, these beneficial uses and water quality objectives serve as water quality standards under the Clean Water Act. In Clean Water Act parlance, state beneficial uses are called “designated uses” and state water quality objectives are called “criteria.” Throughout this Order, the relevant term is used depending on the statutory scheme.



ED_002551_00000748-00047

## ATTACHMENT B – MAP

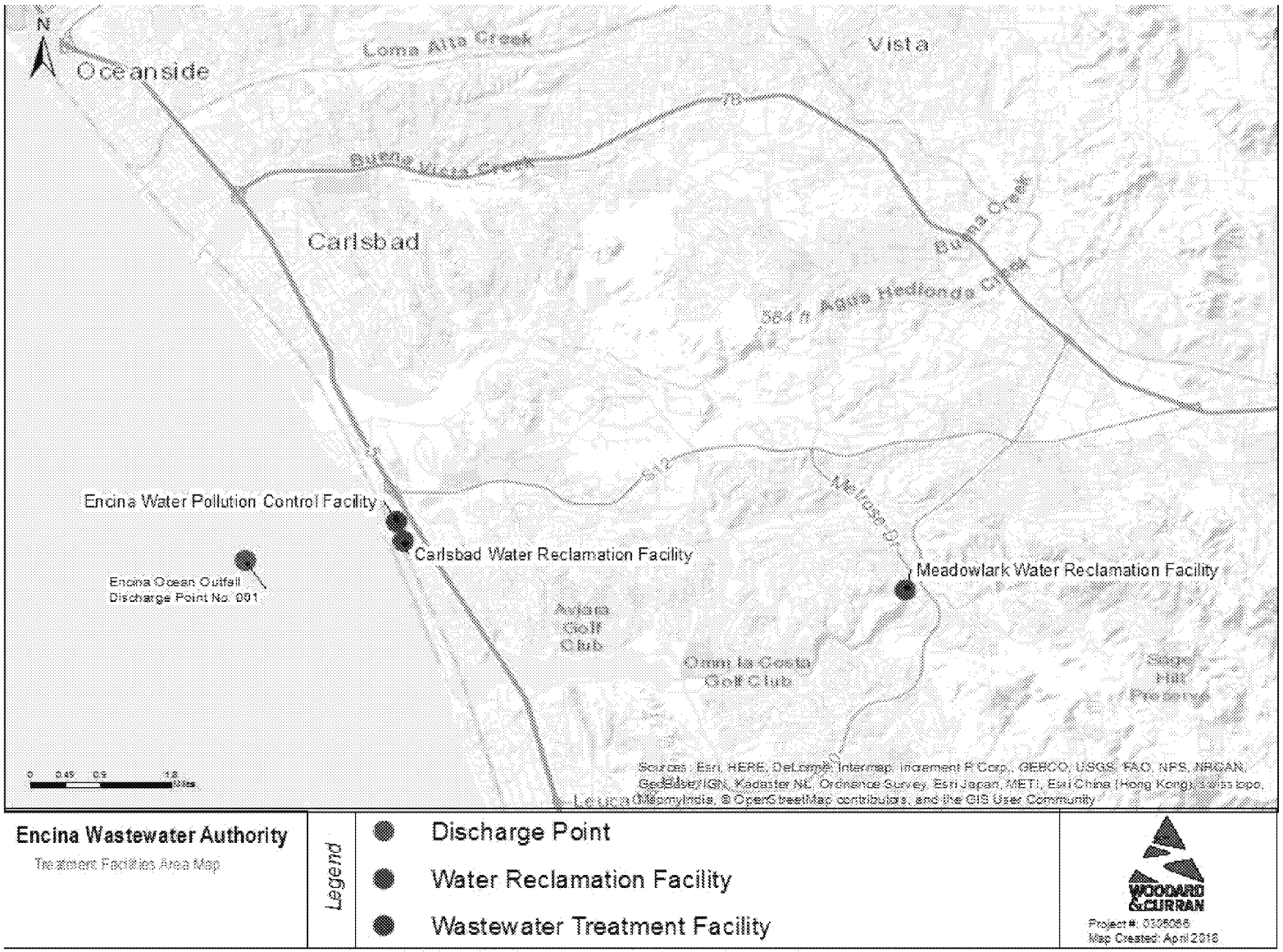


**Encina Wastewater Authority**

Treatment Facilities Area Map

*Legend*

- Discharge Point
- Water Reclamation Facility
- Wastewater Treatment Facility

WOODARD & CURRAN

Project #: 0305066
Map Created: April 2018

Third Party GIS Disclaimer: This map is for reference and graphical purposes only and should not be relied upon by third parties for any legal decisions. Any reliance upon the map or data contained herein shall be at the users' sole risk. Data Sources:

## ATTACHMENT C – FLOW SCHEMATIC

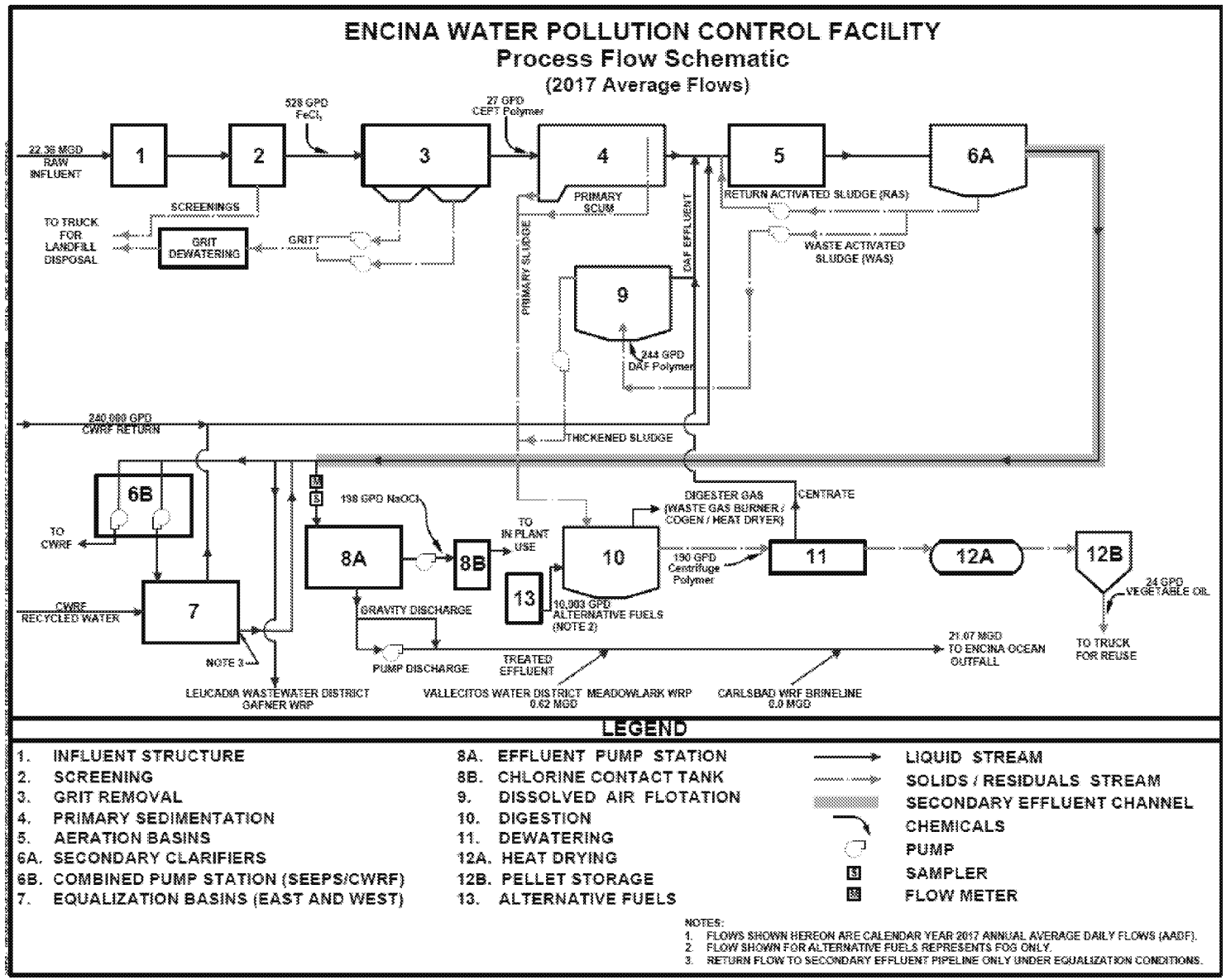

# Carlsbad Water Reclamation Facility
## Process Flow Schematic

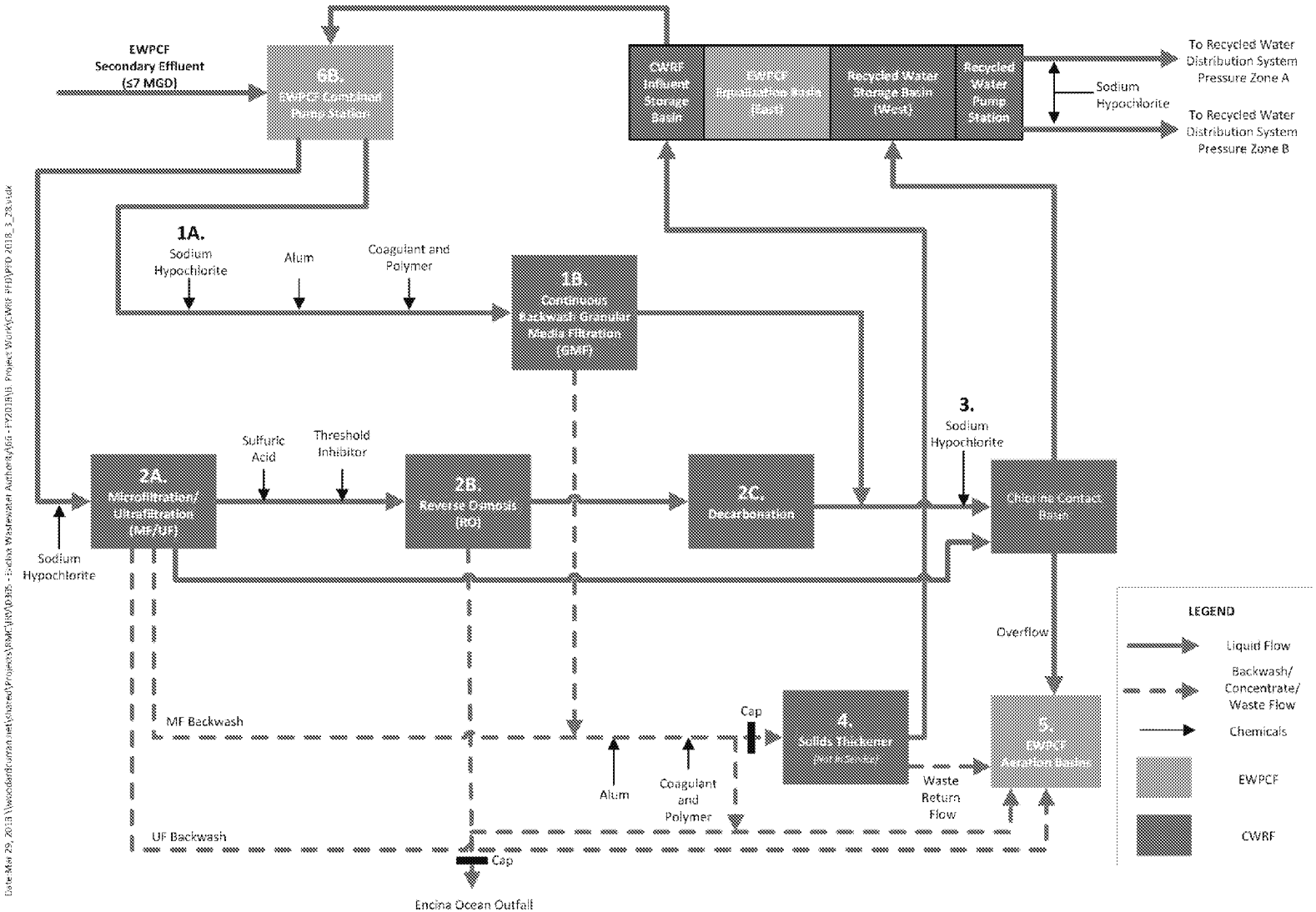

# Meadowlark Reclamation Plant Process Flow Schematic

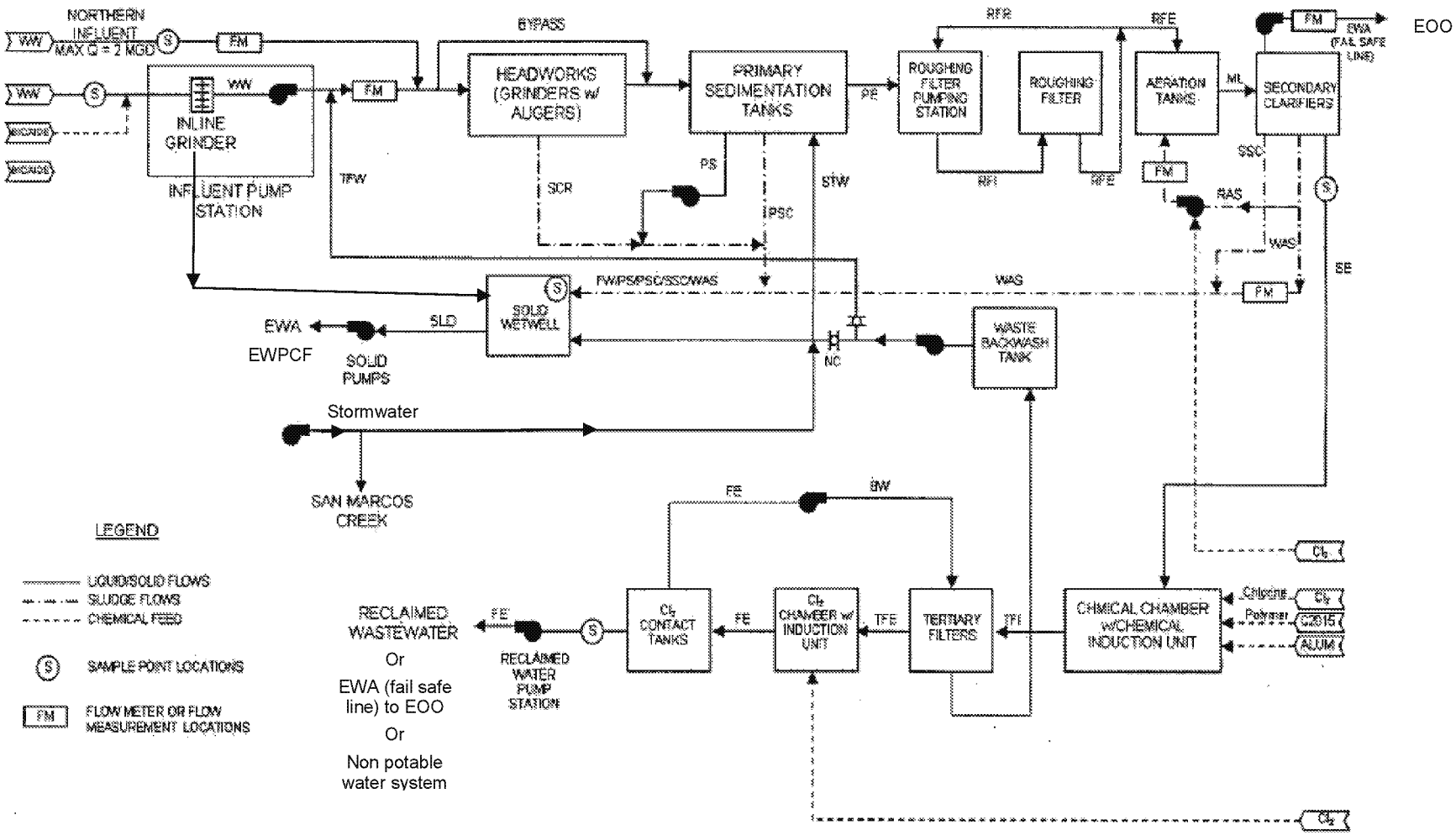

# ATTACHMENT D – STANDARD PROVISIONS

## I. STANDARD PROVISIONS – PERMIT COMPLIANCE

### A. Duty to Comply

1. The Discharger must comply with all of the terms, requirements, and conditions of this Order. Any noncompliance constitutes a violation of the Clean Water Act (CWA) and the California Water Code (Water Code) and is grounds for enforcement action; permit termination, revocation and reissuance, or modification; denial of a permit renewal application; or a combination thereof. (40 CFR sections 122.41(a); Water Code, sections 13261, 13263, 13265, 13268, 13000, 13001, 13304, 13350, 13385.)

2. The Discharger shall comply with effluent standards or prohibitions established under section 307(a) of the CWA for toxic pollutants within the time provided in the regulations that establish these standards or prohibitions, even if this Order has not yet been modified to incorporate the requirement. (40 CFR section 122.41(a)(1).)

### B. Need to Halt or Reduce Activity Not a Defense

It shall not be a defense for a Discharger in an enforcement action that it would have been necessary to halt or reduce the permitted activity in order to maintain compliance with the conditions of this Order. (40 CFR section 122.41(c).)

### C. Duty to Mitigate

The Discharger shall take all reasonable steps to minimize or prevent any discharge in violation of this Order that has a reasonable likelihood of adversely affecting human health or the environment. (40 CFR section 122.41(d).)

### D. Proper Operation and Maintenance

The Discharger shall at all times properly operate and maintain all facilities and systems of treatment and control (and related appurtenances) which are installed or used by the Discharger to achieve compliance with the conditions of this Order. Proper operation and maintenance also includes adequate laboratory controls and appropriate quality assurance procedures. This provision requires the operation of backup or auxiliary facilities or similar systems that are installed by a Discharger only when necessary to achieve compliance with the conditions of this Order. (40 CFR section 122.41(e).)

### E. Property Rights

1. This Order does not convey any property rights of any sort or any exclusive privileges. (40 CFR section 122.41(g).)

2. The issuance of this Order does not authorize any injury to persons or property or invasion of other private rights, or any infringement of State or local law or regulations. (40 CFR section 122.5(c).)

### F. Inspection and Entry

The Discharger shall allow the San Diego Water Board, State Water Board, U.S. Environmental Protection Agency (USEPA), and/or their authorized representatives (including an authorized contractor acting as their representative), upon the presentation of credentials and other documents, as may be required by law, to (33 U.S.C. section 1318(a)(4)(b); 40 CFR section 122.41(i); Water Code, sections 13267, 13383):



ED_002551_00000748-00052

1. Enter upon the Discharger's premises where a regulated facility or activity is located or conducted, or where records are kept under the conditions of this Order (33 U.S.C. section 1318(a)(4)(b)(i); 40 CFR section 122.41(i)(1); Water Code, sections 13267, 13383);
2. Have access to and copy, at reasonable times, any records that must be kept under the conditions of this Order (33 U.S.C. section 1318(a)(4)(b)(ii); 40 CFR section 122.41(i)(2); Water Code, sections 13267, 13383);
3. Inspect and photograph, at reasonable times, any facilities, equipment (including monitoring and control equipment), practices, or operations regulated or required under this Order (33 U.S.C. section 1318(a)(4)(b)(ii); 40 CFR section 122.41(i)(3); Water Code, sections 13267, 13383); and
4. Sample or monitor, at reasonable times, for the purposes of assuring Order compliance or as otherwise authorized by the CWA or the Water Code, any substances or parameters at any location. (33 U.S.C. section 1318(a)(4)(b); 40 CFR section 122.41(i)(4); Water Code, sections 13267, 13383.)

**G. Bypass**

1. Definitions
   a. "Bypass" means the intentional diversion of waste streams from any portion of a treatment facility. (40 CFR section 122.41(m)(1)(i).)
   b. "Severe property damage" means substantial physical damage to property, damage to the treatment facilities, which causes them to become inoperable, or substantial and permanent loss of natural resources that can reasonably be expected to occur in the absence of a bypass. Severe property damage does not mean economic loss caused by delays in production. (40 CFR section 122.41(m)(1)(ii).)
2. Bypass not exceeding limitations. The Discharger may allow any bypass to occur which does not cause exceedances of effluent limitations, but only if it is for essential maintenance to assure efficient operation. These bypasses are not subject to the provisions listed in Standard Provisions – Permit Compliance I.G.3, I.G.4, and I.G.5 below. (40 CFR section 122.41(m)(2).)
3. Prohibition of bypass. Bypass is prohibited, and the San Diego Water Board may take enforcement action against a Discharger for bypass, unless (40 CFR section 122.41(m)(4)(i)):
   a. Bypass was unavoidable to prevent loss of life, personal injury, or severe property damage (40 CFR section 122.41(m)(4)(i)(A));
   b. There were no feasible alternatives to the bypass, such as the use of auxiliary treatment facilities, retention of untreated wastes, or maintenance during normal periods of equipment downtime. This condition is not satisfied if adequate back-up equipment should have been installed in the exercise of reasonable engineering judgment to prevent a bypass that occurred during normal periods of equipment downtime or preventive maintenance (40 CFR section 122.41(m)(4)(i)(B)); and
   c. The Discharger submitted notice to the San Diego Water Board as required under Standard Provisions – Permit Compliance I.G.5 below. (40 CFR section 122.41(m)(4)(i)(C).)



ED_002551_00000748-00053

4. The San Diego Water Board may approve an anticipated bypass, after considering its adverse effects, if the San Diego Water Board determines that it will meet the three conditions listed in Standard Provisions – Permit Compliance I.G.3 above. (40 CFR section 122.41(m)(4)(ii).)

5. Notice

   a. Anticipated bypass. If the Discharger knows in advance of the need for a bypass, it shall submit prior notice, if possible at least 10 days before the date of the bypass. The notice shall be sent to the San Diego Water Board. (40 CFR section 122.41(m)(3)(i).)

   b. Unanticipated bypass. The Discharger shall submit a notice of an unanticipated bypass as required in Standard Provisions - Reporting V.E below (24-hour notice). The notice shall be sent to the San Diego Water Board. (40 CFR section 122.41(m)(3)(ii).)

## H. Upset

Upset means an exceptional incident in which there is unintentional and temporary noncompliance with technology based permit effluent limitations because of factors beyond the reasonable control of the Discharger. An upset does not include noncompliance to the extent caused by operational error, improperly designed treatment facilities, inadequate treatment facilities, lack of preventive maintenance, or careless or improper operation. (40 CFR section 122.41(n)(1).)

1. Effect of an upset. An upset constitutes an affirmative defense to an action brought for noncompliance with such technology based permit effluent limitations if the requirements of Standard Provisions – Permit Compliance I.H.2 below are met. No determination made during administrative review of claims that noncompliance was caused by upset, and before an action for noncompliance, is final administrative action subject to judicial review. (40 CFR section 122.41(n)(2).)

2. Conditions necessary for a demonstration of upset. A Discharger who wishes to establish the affirmative defense of upset shall demonstrate, through properly signed, contemporaneous operating logs or other relevant evidence that (40 CFR section 122.41(n)(3)):

   a. An upset occurred and that the Discharger can identify the cause(s) of the upset (40 CFR section 122.41(n)(3)(i));

   b. The permitted facility was, at the time, being properly operated (40 CFR section 122.41(n)(3)(ii));

   c. The Discharger submitted notice of the upset as required in Standard Provisions – Reporting V.E.2.b below (24-hour notice) (40 CFR section 122.41(n)(3)(iii)); and

   d. The Discharger complied with any remedial measures required under Standard Provisions – Permit Compliance I.C above. (40 CFR section 122.41(n)(3)(iv).)

3. Burden of proof. In any enforcement proceeding, the Discharger seeking to establish the occurrence of an upset has the burden of proof. (40 CFR section 122.41(n)(4).)



ED_002551_00000748-00054

## II. STANDARD PROVISIONS – PERMIT ACTION

### A. General

This Order may be modified, revoked and reissued, or terminated for cause. The filing of a request by the Discharger for modification, revocation and reissuance, or termination, or a notification of planned changes or anticipated noncompliance does not stay any Order condition. (40 CFR section 122.41(f).)

### B. Duty to Reapply

If the Discharger wishes to continue an activity regulated by this Order after the expiration date of this Order, the Discharger must apply for and obtain a new permit. (40 CFR section 122.41(b).)

### C. Transfers

This Order is not transferable to any person except after notice to the San Diego Water Board. The San Diego Water Board may require modification or revocation and reissuance of this Order to change the name of the Discharger and incorporate such other requirements as may be necessary under the CWA and the Water Code. (40 CFR sections 122.41(l)(3), 122.61.)

## III. STANDARD PROVISIONS – MONITORING

**A.** Samples and measurements taken for the purpose of monitoring shall be representative of the monitored activity. (40 CFR section 122.41(j)(1).)

**B.** Monitoring must be conducted according to test procedures approved under 40 CFR part 136 for the analyses of pollutants unless another method is required under 40 CFR chapter 1, subchapter N. Monitoring must be conducted according to sufficiently sensitive test methods approved under 40 CFR part 136 for the analysis of pollutants or pollutant parameters or as required under 40 CFR chapter 1, subchapter N. For the purposes of this paragraph, a method is sufficiently sensitive when:

1. The method minimum level (ML) is at or below the level of the most stringent effluent limitation established in the permit for the measured pollutant or pollutant parameter, and either the method ML is at or below the level of the most stringent applicable water quality criterion for the measured pollutant or pollutant parameter or the method ML is above the applicable water quality criterion but the amount of the pollutant or pollutant parameter in the facility's discharge is high enough that the method detects and quantifies the level of the pollutant or pollutant parameter in the discharge; or
2. The method has the lowest ML of the analytical methods approved under 40 CFR part 136 or required under 40 CFR chapter 1, subchapter N for the measured pollutant or pollutant parameter.

In the case of pollutants or pollutant parameters for which there are no approved methods under 40 CFR part 136 or otherwise required under 40 CFR chapter 1, subchapter N, monitoring must be conducted according to a test procedure specified in this Order for such pollutants or pollutant parameters. (40 CFR sections 122.21(e)(3),122.41(j)(4), 122.44(i)(1)(iv).)

## IV. STANDARD PROVISIONS – RECORDS

**A.** The Discharger shall retain records of all monitoring information, including all calibration and maintenance records and all original strip chart recordings for continuous monitoring instrumentation, copies of all reports required by this Order, and records of all data used to



ED_002551_00000748-00055

complete the application for this Order, for a period of at least three (3) years from the date of the sample, measurement, report or application. This period may be extended by request of the San Diego Water Board Executive Officer at any time. (40 CFR section 122.41(j)(2).)

**B.** Records of monitoring information shall include:

1. The date, exact place, and time of sampling or measurements (40 CFR section 122.41(j)(3)(i));
2. The individual(s) who performed the sampling or measurements (40 CFR section 122.41(j)(3)(ii));
3. The date(s) analyses were performed (40 CFR section 122.41(j)(3)(iii));
4. The individual(s) who performed the analyses (40 CFR section 122.41(j)(3)(iv));
5. The analytical techniques or methods used (40 CFR section 122.41(j)(3)(v)); and
6. The results of such analyses. (40 CFR section 122.41(j)(3)(vi).)

**C.** Claims of confidentiality for the following information will be denied (40 CFR section 122.7(b)):

1. The name and address of any permit applicant or Discharger (40 CFR section 122.7(b)(1)); and
2. Permit applications and attachments, permits and effluent data. (40 CFR section 122.7(b)(2).)

## V. STANDARD PROVISIONS – REPORTING

### A. Duty to Provide Information

The Discharger shall furnish to the San Diego Water Board, State Water Board, or USEPA within a reasonable time, any information which the San Diego Water Board, State Water Board, or USEPA may request to determine whether cause exists for modifying, revoking and reissuing, or terminating this Order or to determine compliance with this Order. Upon request, the Discharger shall also furnish to the San Diego Water Board, State Water Board, or USEPA copies of records required to be kept by this Order. (40 CFR section 122.41(h); Water Code, sections 13267, 13383.)

### B. Signatory and Certification Requirements

1. All applications, reports, or information submitted to the San Diego Water Board, State Water Board, and/or USEPA shall be signed and certified in accordance with Standard Provisions – Reporting V.B.2, V.B.3, V.B.4, V.B.5, and V.B.6 below. (40 CFR section 122.41(k).)
2. All permit applications shall be signed by either a principal executive officer or ranking elected official. For purposes of this provision, a principal executive officer of a federal agency includes: (i) the chief executive officer of the agency, or (ii) a senior executive officer having responsibility for the overall operations of a principal geographic unit of the agency (e.g., Regional Administrators of USEPA). (40 CFR section 122.22(a)(3).).
3. All reports required by this Order and other information requested by the San Diego Water Board, State Water Board, or USEPA shall be signed by a person described in Standard Provisions – Reporting V.B.2 above, or by a duly authorized representative of that person. A person is a duly authorized representative only if:
   a. The authorization is made in writing by a person described in Standard Provisions – Reporting V.B.2 above (40 CFR section 122.22(b)(1));



ED_002551_00000748-00056

b. The authorization specifies either an individual or a position having responsibility for the overall operation of the regulated facility or activity such as the position of plant manager, operator of a well or a well field, superintendent, position of equivalent responsibility, or an individual or position having overall responsibility for environmental matters for the company. (A duly authorized representative may thus be either a named individual or any individual occupying a named position.) (40 CFR section 122.22(b)(2)); and

c. The written authorization is submitted to the San Diego Water Board and State Water Board. (40 CFR section 122.22(b)(3).)

4. If an authorization under Standard Provisions – Reporting V.B.3 above is no longer accurate because a different individual or position has responsibility for the overall operation of the facility, a new authorization satisfying the requirements of Standard Provisions – Reporting V.B.3 above must be submitted to the San Diego Water Board and State Water Board prior to or together with any reports, information, or applications, to be signed by an authorized representative. (40 CFR section 122.22(c).)

5. Any person signing a document under Standard Provisions – Reporting V.B.2 or V.B.3 above shall make the following certification:

   "I certify under penalty of law that this document and all attachments were prepared under my direction or supervision in accordance with a system designed to assure that qualified personnel properly gather and evaluate the information submitted. Based on my inquiry of the person or persons who manage the system or those persons directly responsible for gathering the information, the information submitted is, to the best of my knowledge and belief, true, accurate, and complete. I am aware that there are significant penalties for submitting false information, including the possibility of fine and imprisonment for knowing violations." (40 CFR section 122.22(d).)

6. Any person providing the electronic signature for documents described in Standard Provisions – V.B.1, V.B.2, or V.B.3 that are submitted electronically shall meet all relevant requirements of Standard Provisions – Reporting V.B, and shall ensure that all relevant requirements of 40 CFR part 3 (Cross-Media Electronic Reporting) and 40 CFR part 127 (NPDES Electronic Reporting Requirements) are met for that submission. (40 C.F.R section 122.22(e).)

## C. Monitoring Reports

1. Monitoring results shall be reported at the intervals specified in the Monitoring and Reporting Program (Attachment E) in this Order. (40 CFR section 122.41(l)(4).)

2. Monitoring results must be reported on a Discharge Monitoring Report (DMR) form or forms provided or specified by the San Diego Water Board or State Water Board. As of December 21, 2016, all reports and forms must be submitted electronically to the initial recipient defined in Standard Provisions – Reporting V.J and comply with 40 CFR part 3, 40 CFR section 122.22, and 40 CFR part 127. (40 CFR section 122.41(l)(4)(i).)

3. If the Discharger monitors any pollutant more frequently than required by this Order using test procedures approved under 40 CFR part 136, or another method required for an industry-specific waste stream under 40 CFR chapter 1, subchapter N, the results of such monitoring shall be included in the calculation and reporting of the data submitted in the DMR or reporting form specified by the San Diego Water Board or State Water Board. (40 CFR section 122.41(l)(4)(ii).)



ED_002551_00000748-00057

4. Calculations for all limitations, which require averaging of measurements, shall utilize an arithmetic mean unless otherwise specified in this Order. (40 CFR section 122.41(l)(4)(iii).)

**D. Compliance Schedules**

Reports of compliance or noncompliance with, or any progress reports on, interim and final requirements contained in any compliance schedule of this Order, shall be submitted no later than 14 days following each schedule date. (40 CFR section 122.41(l)(5).)

**E. Twenty-Four Hour Reporting**

1. The Discharger shall report any noncompliance which may endanger health or the environment. Any information shall be provided orally within 24 hours from the time the Discharger becomes aware of the circumstances. A report shall also be provided within five (5) days of the time the Discharger becomes aware of the circumstances. The report shall contain a description of the noncompliance and its cause; the period of noncompliance, including exact dates and times, and if the noncompliance has not been corrected, the anticipated time it is expected to continue; and steps taken or planned to reduce, eliminate, and prevent reoccurrence of the noncompliance.

   For noncompliance events related to combined sewer overflows, sanitary sewer overflows, or bypass events, these reports must include the data described above (with the exception of time of discovery) as well as the type of event (i.e., combined sewer overflow, sanitary sewer overflow, or bypass event), type of overflow structure (e.g., manhole, combined sewer overflow outfall), discharge volume untreated by the treatment works treating domestic sewage, types of human health and environmental impacts of the event, and whether the noncompliance was related to wet weather.

   As of December 21, 2020, all reports related to combined sewer overflows, sanitary sewer overflows, or bypass events <**Optional language (see instructions at I.G.5):** must be submitted to the San Diego Water Board and> must be submitted electronically to the initial recipient defined in Standard Provisions – Reporting V.J. The reports shall comply with 40 CFR part 3, 40 CFR section 122.22, and 40 CFR part 127. The San Diego Water Board may also require the Discharger to electronically submit reports not related to combined sewer overflows, sanitary sewer overflows, or bypass events under this section. (40 CFR section 122.41(l)(6)(i).)

2. The following shall be included as information that must be reported within 24 hours:

   a. Any unanticipated bypass that exceeds any effluent limitation in this Order. (40 CFR section 122.41(l)(6)(ii)(A).)

   b. Any upset that exceeds any effluent limitation in this Order. (40 CFR section 122.41(l)(6)(ii)(B).)

3. The San Diego Water Board may waive the above required written report on a case-by-case basis if an oral report has been received within 24 hours. (40 CFR section 122.41(l)(6)(ii)(B).)

**F. Planned Changes**

The Discharger shall give notice to the San Diego Water Board as soon as possible of any planned physical alterations or additions to the permitted facility. Notice is required under this provision only when (40 CFR section 122.41(l)(1)):



ED_002551_00000748-00058

1. The alteration or addition to a permitted facility may meet one of the criteria for determining whether a facility is a new source in section 122.29(b) (40 CFR section 122.41(l)(1)(i)); or
2. The alteration or addition could significantly change the nature or increase the quantity of pollutants discharged. This notification applies to pollutants that are not subject to effluent limitations in this Order. (40 CFR section 122.41(l)(1)(ii).)

   The alteration or addition could significantly change the nature or increase the quantity of pollutants discharged. This notification applies to pollutants that are subject neither to effluent limitations in this Order nor to notification requirements under section 122.42(a)(1) (see Additional Provisions—Notification Levels VII.A.1). (40 CFR section 122.41(l)(1)(ii).)

### G. Anticipated Noncompliance

The Discharger shall give advance notice to the San Diego Water Board of any planned changes in the permitted facility or activity that may result in noncompliance with this Order's requirements. (40 CFR section 122.41(l)(2).)

### H. Other Noncompliance

The Discharger shall report all instances of noncompliance not reported under Standard Provisions – Reporting V.C, V.D, and V.E above at the time monitoring reports are submitted. The reports shall contain the information listed in Standard Provision – Reporting V.E above. For noncompliance events related to combined sewer overflows, sanitary sewer overflows, or bypass events, these reports shall contain the information described in Standard Provision – Reporting V.E and the applicable required data in appendix A to 40 CFR part 127. The San Diego Water Board may also require the Discharger to electronically submit reports not related to combined sewer overflows, sanitary sewer overflows, or bypass events under this section. (40 CFR section 122.41(l)(7).)

### I. Other Information

When the Discharger becomes aware that it failed to submit any relevant facts in a permit application, or submitted incorrect information in a permit application or in any report to the San Diego Water Board, State Water Board, or USEPA, the Discharger shall promptly submit such facts or information. (40 CFR section 122.41(l)(8).)

### J. Initial Recipient for Electronic Reporting Data

The owner, operator, or the duly authorized representative is required to electronically submit NPDES information specified in appendix A to 40 CFR part 127 to the initial recipient defined in 40 CFR section 127.2(b). USEPA will identify and publish the list of initial recipients on its website and in the Federal Register, by State and by NPDES data group [see 40 CFR section 127.2(c)]. USEPA will update and maintain this listing.
(40 CFR section 122.41(l)(9).)

## VI. STANDARD PROVISIONS – ENFORCEMENT

The San Diego Water Board is authorized to enforce the terms of this permit under several provisions of the Water Code, including, but not limited to, sections 13268, 13385, 13386, and 13387.



ED_002551_00000748-00059

## VII. ADDITIONAL PROVISIONS – NOTIFICATION LEVELS

**Publicly-Owned Treatment Works (POTWs)** - All POTWs shall provide adequate notice to the San Diego Water Board of the following (40 CFR section 122.42(b)):

**A.** Any new introduction of pollutants into the POTW from an indirect discharger that would be subject to sections 301 or 306 of the CWA if it were directly discharging those pollutants (40 CFR section 122.42(b)(1)); and

**B.** Any substantial change in the volume or character of pollutants being introduced into that POTW by a source introducing pollutants into the POTW at the time of adoption of this Order. (40 CFR section 122.42(b)(2).)

**C.** Adequate notice shall include information on the quality and quantity of effluent introduced into the POTW as well as any anticipated impact of the change on the quantity or quality of effluent to be discharged from the POTW. (40 CFR section 122.42(b)(3).)

# ATTACHMENT E – MONITORING AND REPORTING PROGRAM

## CONTENTS

I. General Monitoring Provisions ..... E-3
II. Monitoring Locations ..... E-4
III. Core Monitoring Requirements ..... E-5
IV. Receiving Water Monitoring Requirements ..... E-15
  A. Surf Zone Water Quality Monitoring Requirements ..... E-16
  B. Near Shore and Offshore Water Quality Monitoring Requirements ..... E-17
  C. Benthic Monitoring Requirements ..... E-18
  D. Fish and Macroinvertebrates Monitoring Requirements ..... E-22
  E. Receiving Water Status and Trends ..... E-26
V. Regional Monitoring Requirements ..... E-27
  A. Kelp Bed Canopy Monitoring Requirements ..... E-27
  B. Southern California Bight Monitoring Program Participation Requirements ..... E-28
VI. Special Studies Requirements ..... E-29
  A. Climate Change Action Plan ..... E-29
  B. Plume Tracking Study ..... E-29
VII. Reporting Requirements ..... E-31
  A. General Monitoring and Reporting Requirements ..... E-31
  B. Self-Monitoring Reports (SMRs) ..... E-31
  C. Discharge Monitoring Reports (DMRs) ..... E-34
  D. Other Reports ..... E-34

## TABLES

Table E-1. Monitoring Station Locations ..... E-4
Table E-2. Influent Monitoring (Monitoring Location INF-001)[1] ..... E-6
Table E-3. Effluent Monitoring (Monitoring Locations M-001 and M-002)[1] ..... E-6
Table E-4. Effluent Monitoring (Monitoring Location M-004)[1] ..... E-7
Table E-5. Effluent Monitoring (Monitoring Location M-005)[1] ..... E-10
Table E-6. Surf Zone Water Quality Monitoring[1] ..... E-16
Table E-7. Near Shore and Offshore Water Quality Monitoring Requirements[1] ..... E-17
Table E-8. List of Parameters to Characterize Sediment Contamination Exposure and Effect[1] ..... E-19
Table E-9. List of Parameters to Characterize Fish Tissue[1] ..... E-24
Table E-10. Monitoring Periods and Reporting Schedule ..... E-32
Table E-11. Other Reports ..... E-34



ED_002551_00000748-00061

## ATTACHMENT E – MONITORING AND REPORTING PROGRAM (MRP)

Section 308 of the federal Clean Water Act (CWA) and sections 122.41(h), (j)-(l), 122.44(i), and 122.48 of title 40 of the Code of Federal Regulations (40 CFR) require that all National Pollutant Discharge Elimination System (NPDES) permits specify monitoring and reporting requirements. California Water Code (Water Code) sections 13267 and 13383 also authorize the California Regional Water Quality Control Board, San Diego Region (San Diego Water Board) to establish monitoring, inspection, entry, reporting, and recordkeeping requirements. Pursuant to this authority, this MRP establishes conditions for the Encina Wastewater Authority (Discharger) to conduct routine or episodic self-monitoring of the discharges regulated under this Order at specified effluent, and receiving water monitoring locations. The MRP requires the Discharger to report the results to the San Diego Water Board with information necessary to evaluate discharge characteristics and compliance status.

The purpose of the MRP is to determine and ensure compliance with effluent limitations and other requirements established in this Order, assess treatment efficiency, characterize effluents, and characterize the receiving water and the effects of the discharge on the receiving water. The MRP also specifies requirements concerning the proper use, maintenance, and installation of monitoring equipment and methods, and the monitoring type intervals and frequency necessary to yield data that are representative of the activities and discharges regulated under this Order.

Each monitoring section contains an introductory paragraph summarizing why the monitoring is needed and the key management questions the monitoring is designed to answer. In developing the list of key management questions the San Diego Water Board considered four basic types of information for each question:

(1) Management Information Need – Why does the San Diego Water Board need to know the answer?

(2) Monitoring Criteria – What monitoring will be conducted for deriving an answer to the question?

(3) Expected Product – How should the answer be expressed and reported?

(4) Possible Management Actions – What actions will be potentially influenced by the answer?

The framework for this monitoring program has three components that comprise a range of spatial and temporal scales: 1. core monitoring, 2. regional monitoring, and 3. special studies.

1. Core monitoring consists of the basic site-specific monitoring necessary to measure compliance with individual effluent limits and/or impacts to receiving water quality. Core monitoring is typically conducted in the immediate vicinity of the discharge by examining local scale spatial effects.

2. Regional monitoring provides information necessary to make assessments over large areas and serves to evaluate cumulative effects of all anthropogenic inputs. Regional monitoring data also assists in the interpretation of core monitoring studies. In the event that a regional monitoring effort takes place during the permit cycle in which the MRP does not specifically address regional monitoring, the San Diego Water Board may allow relief from aspects of core monitoring components in order to encourage participation pursuant to section V of this MRP.

3. Special studies are directed monitoring efforts designed in response to specific management or research questions identified through either core or regional monitoring programs. Often they are used to help understand core or regional monitoring results, where a specific environmental process is not well understood, or to address unique issues of local importance.

## I. General Monitoring Provisions

**A.** Samples and measurements taken as required herein shall be representative of the volume and nature of the monitoring discharge. All samples shall be taken at the monitoring points specified in section II, Table E-1 and, unless otherwise specified, before the monitored flow joins or is diluted by any other waste stream, body of water, or substance. Monitoring points shall not be changed without notification to and the approval of the San Diego Water Board.

**B.** Appropriate flow measurement devices and methods consistent with accepted scientific practices shall be selected and used to ensure the accuracy and reliability of measurements of the volume of monitored discharges. The devices shall be installed, calibrated and maintained to ensure that the accuracy of the measurement is consistent with the accepted capability of that type of device. Devices selected shall be capable of measuring flows with a maximum deviation of less than ±5 percent from true discharge rates throughout the range of expected discharge volumes.

**C.** Monitoring must be conducted according to U.S. Environmental Protection Agency (USEPA) test procedures approved at 40 CFR part 136, *Guidelines Establishing Test Procedures for the Analysis of Pollutants Under the CWA* as amended, or unless other test procedures are specified in this Order and attachments thereof or otherwise specified by the San Diego Water Board.

**D.** All analyses shall be performed in a laboratory certified to perform such analyses by the State Water Resource Control Board's (State Water Board's) Division of Drinking Water (DDW) or a laboratory approved by the San Diego Water Board. The laboratory must be accredited under the DDW Environmental Laboratory Accreditation Program (ELAP) to ensure the quality of analytical data used for regulatory purposes to meet the requirements of this Order. Additional information on ELAP can be accessed at http://www.waterboards.ca.gov/drinking_water/certlic/labs/index.shtml.

**E.** Records of monitoring information shall include information required under Standard Provision, Attachment D, section IV.

**F.** All monitoring instruments and devices used by the Discharger to fulfill the prescribed monitoring program shall be properly maintained and calibrated as necessary to ensure their continued accuracy. All flow measurement devices shall be calibrated at least once per year, or more frequently, to ensure continued accuracy of the devices (i.e., no more than 12 months between calibrations for the flow measurement devises).

**G.** The Discharger shall have, and implement, an acceptable written quality assurance (QA) plan for laboratory analyses. Duplicate chemical analyses must be conducted on a minimum of 10 percent of the samples or at least one sample per month, whichever is greater. A similar frequency shall be maintained for analyzing spiked samples. The Discharger should have a success rate equal or greater than 80 percent.

**H.** When requested by USEPA or the San Diego Water Board, the Discharger will participate in the NPDES Discharge Monitoring Report QA (DMR-QA) performance study. If the DMR-QA is not requested, the Discharger shall submit the most recent Water Pollution Performance Evaluation Study. The Discharger shall ensure that the results of the DMR-QA Study or the most recent Water Pollution Performance Evaluation Study are submitted annually by December 31 to the State Water Resources Control Board at the following address:

State Water Resources Control Board Quality Assurance Program Officer
Office of Information Management and Analysis
State Water Resources Control Board
1001 I Street, Sacramento, CA 95814



ED_002551_00000748-00063

I. Analysis for toxic pollutants, including chronic toxicity, with effluent limitations or performance goals based on water quality objectives and criteria of the *Water Quality Control Plan for the San Diego Basin* (Basin Plan) and the *Water Quality Control Plan for Ocean Waters of California, California Ocean Plan* (Ocean Plan) shall be conducted in accordance with procedures described in the Ocean Plan and restated in this MRP.

## II. MONITORING LOCATIONS

The Discharger shall establish the following monitoring locations to demonstrate compliance with the effluent limitations, discharge specifications, and other requirements in this Order:

**Table E-1. Monitoring Station Locations**

| Discharge Point Name | Monitoring Location Name | Monitoring Location Description[1] |
|---|---|---|
| -- | INF-001 | At a location where all influent flows to the Encina Water Pollution Control Facility (EWPCF) are accounted for in monitoring events; upstream of any in-plant return flows; and where representative samples of influent can be collected. |
| -- | INF-002 | At a location where all influent flows to the Meadowlark Water Reclamation Plant (MWRP) are accounted for in monitoring events; upstream of any in-plant return flows; and where representative samples of influent can be collected. |
| -- | M-001 | Downstream of any in-plant return flows at the EWPCF where representative samples of effluent treated solely at the EWPCF can be collected, prior to commingling with other discharges contributing to the Encina Ocean Outfall (EOO). |
| -- | M-002 | Downstream of any in-plant return flows at the MWRP where representative samples of effluent treated solely at the MWRP can be collected, prior to commingling with other discharges contributing to the EOO. |
| 001 | M-004 | At a location where representative samples of commingled effluent from the EWPCF, the MWRP, and the Carlsbad Water Reclamation Facility (CWRF) can be collected. |
| -- | M-005 | At a location where representative samples of brine from the CWRF can be collected, prior to commingling with other discharges contributing to the EOO. |
| **SURF ZONE STATIONS** | | |
| -- | S1 | Surf zone, 6,500 feet south of the outfall (approximately: 33°06'02"N 117°19'09"W). |
| -- | S2 | Surf zone, 2,500 feet south of the outfall (approximately: 33°06'22"N 117°19'17"W). |
| -- | S3 | Surf zone; at the outfall (approximately: 33°06'56"N 117°19'31"W). |
| -- | S4 | Surf zone, 3,000 feet north of the outfall (approximately: 33°07'09"N 117°19'37"W). |
| -- | S5 | Surf zone, 5,500 feet north of the outfall (approximately: 32°07'42"N 117°20'01"W). |
| **NEAR SHORE STATIONS** | | |
| -- | K1 | Downcoast of the outfall, at the contemporary offshore edge of the kelp bed (kelp station; approximately: 33°06'14.8"N 117°19'37.3"W). |
| -- | K2 | Upcoast of the outfall, at the contemporary offshore edge of the kelp bed (kelp station; approximately: 33° 07'22.5"N 117°20'18.8"W). |
| -- | N2a | Directly offshore from S2, at the 30-foot contour depth, mean lower low water (MLLW) (approximately: 33°06'28"N 117°19'37"W). |



ED_002551_00000748-00064

| | | |
|---|---|---|
| -- | N3 | Directly offshore from S3, at the 30-foot depth contour, MLLW (approximately: 33º06'48"N 117°19'49"W). |
| -- | N4 | Directly offshore from S4, at the 30-foot depth contour, MLLW (approximately: 33º 07'11"N 117°20'02"W). |
| **OFFSHORE STATIONS** | | |
| -- | Z1 | At a distance of 150 feet downcoast from the diffuser midpoint, and at the 150-foot depth (MLLW) contour (ZID-boundary station; approximately: 33º06'33"N 117°20'47"W). |
| -- | Z2 | At a distance of 150 feet upcoast from the diffuser midpoint, and at the 150-foot depth (MLLW) contour (ZID-boundary stations; approximately: 33º06'36"N 117°20'48"W). |
| -- | G1 | At a distance of 1,000 feet downcoast from the outfall, and at the 150-feet depth (MLLW) contour (Gradient station; approximately: 33º 06'25"N 117°20'44"W). |
| -- | G2 | At a distance of 1,000 feet upcoast from the outfall, and at the 150-foot depth (MLLW) contour (Gradient station; approximately: 33º 06'44"N 117°20'51"W). |
| -- | R1 | Approximately 2.0 miles downcoast from the outfall, and at the 150-foot depth (MLLW) contour (Reference station; approximately: 33º 04'42"N 117°20'01"W). |
| **BIOLOGICAL TRANSECTS** | | |
| -- | T1 | Begin trawl slightly upcoast of station R1, first trawl to be away from station heading upcoast along the 150-foot depth (MLLW) contour. |
| -- | T2 | Begin trawl slightly downcoast of station G1, first trawl to be away from station heading downcoast along the 150-foot depth (MLLW) contour. |
| -- | T3 | Begin trawl slightly upcoast of station G2, first trawl to be away from station heading upcoast along the 150-foot depth (MLLW) contour. |
| -- | T4 | Begin trawl slightly downcoast of historical station R2 (i.e., 2.3 miles upcoast from the outfall), first trawl to be away from station heading downcoast along the 150-foot depth (MLLW) contour. |
| **RIG FISHING STATIONS** | | |
| -- | RF1 | At a distance 5,000 feet downcoast of station K1 (approximately: 33º05'28"N 117º19'32"W) |
| -- | RF2 | At the outfall diffuser midpoint (approximately: 33º06'33"N 117º20'47"W) |
| -- | RF3 | At a distance 3,000 feet upcoast of station K2 (approximately: 33º07'48"N 117º20'34"W) |

1. The North latitude and West longitude information in Table E-1 are approximate for administrative purposes.

## III. Core Monitoring Requirements

### A. Influent Monitoring Requirements

Influent monitoring is the collection and analysis of samples or measurements of wastewater prior to the treatment processes. Influent monitoring of a wastewater stream prior to entering the treatment plant is necessary to address the following question:

(1) Are the Facilities complying with permit conditions including, but not limited to, carbonaceous biochemical oxygen demand (5-day @ 20 degrees Celsius (°C)) ($CBOD_5$) and total suspended solids (TSS) percent removal limitations?



ED_002551_00000748-00065

The Discharger shall monitor the influent at Monitoring Location INF-001 and INF-002 as follows:

**Table E-2. Influent Monitoring (Monitoring Location INF-001)[1]**

| Parameter | Units | Sample Type | Minimum Sampling Frequency | Required Analytical Test Method |
|---|---|---|---|---|
| Flow | million gallons per day (MGD) | Recorder/Totalizer | Continuous | -- |
| $CBOD_5$ | milligram per liter (mg/L) | 24-hr Composite | 1/Week | [2] |
| TSS | mg/L | 24-hr Composite | 1/Week | [2] |

[1] See Attachment A for definitions of abbreviations and a glossary of common terms used in this Order.

[2] As required under 40 CFR part 136.

## B. Effluent Monitoring Requirements

Effluent monitoring is the collection and analysis of samples or measurements of effluents, after all treatment processes, to determine and quantify contaminants and to demonstrate compliance with applicable effluent limitations, standards, and other requirements of this Order.

Effluent monitoring is necessary to address the following questions:

(1) Does the effluent comply with permit effluent limitations, performance goals, and other requirements of this Order, thereby ensuring that water quality standards are achieved in the receiving water?

(2) What is the mass of constituents that are discharged daily, monthly, or annually?

(3) Is the effluent concentration or mass changing over time?

(4) Are the EWPCF, the MWRP, and the CWRF being properly operated and maintained to ensure compliance with the conditions of this Order?

1. The Discharger shall monitor the effluent at Monitoring Locations M-001 and M-002 as follows:

**Table E-3. Effluent Monitoring (Monitoring Locations M-001 and M-002)[1]**

| Parameter | Units | Sample Type | Minimum Sampling Frequency | Required Analytical Test Method |
|---|---|---|---|---|
| Flow | MGD | Recorder/Totalizer | Continuous | -- |
| $CBOD_5$ | mg/L | 24-hr Composite[2] | 1/Day[3,4] | [5] |
| Biochemical Oxygen Demand (5-day @ °C) ($BOD_5$) | mg/L | 24-hr Composite[2] | 1/Month[3] | [5] |
| TSS | mg/L | 24-hr Composite[2] | 1/Day[3,4] | [5] |
| Oil and Grease | mg/L | Grab | 1/Month[3,6] | [5] |
| Settleable Solids | milliliter per liter (ml/L) | Grab | 1/Week[6] | [5] |
| Turbidity | nephelometric turbidity unit (NTU) | 24-hr Composite[2] | 1/Week[6] | [5] |



ED_002551_00000748-00066

| Parameter | Units | Sample Type | Minimum Sampling Frequency | Required Analytical Test Method |
|---|---|---|---|---|
| pH | standard units | Grab | 1/Day[3] | [4] |

[1] See Attachment A for definitions of abbreviations and a glossary of common terms used in this Order.

[2] If the discharge is intermittent, the 24-hr composite may be composed of samples taken from less than a 24-hr period. If 24-hr composite is not possible (e.g., a 24-hr composite would not yield sufficient volume to preform analytical testing), the Discharger may take a grab in lieu of the 24-hr composite.

[3] The Discharger shall calculate and report the mass emission rate (MER) of the constituent for each sample taken. The MER shall be calculated in accordance with section VII.I.4 of this Order.

[4] Applies 5 days per week except 7 days per week for at least 1 week during July or August of each year.

[5] As required under 40 CFR part 136.

[6] The minimum frequency of monitoring for this constituent is automatically increased to twice the minimum frequency specified, if any analysis for this constituent yields a result higher than the applicable effluent limitation or performance goal specified in this Order. The increased minimum frequency of monitoring shall remain in effect until the results of a minimum of four consecutive analyses for this constituent are below all applicable effluent limitations or performance goals specified in this Order.

2. The Discharger shall monitor the effluent at Monitoring Location M-004 (Discharge Point No. 001) as follows:

**Table E-4. Effluent Monitoring (Monitoring Location M-004)[1]**

| Parameter | Units | Sample Type | Minimum Sampling Frequency | Required Analytical Test Method |
|---|---|---|---|---|
| Flow | MGD | Recorder/Totalizer | Continuous | -- |
| Temperature | Degrees Fahrenheit (°F) | Grab | 1/Week | [2] |
| Dissolved Oxygen | mg/L | Grab | 1/Week | [2] |
| Total Dissolved Solids | mg/L | 24-hr Composite | 1/Month | [2] |
| Total Coliform | units/100 ml | Grab | 1/Quarter | [2] |
| Fecal Coliform | units/100 ml | Grab | 1/Quarter | [2] |
| Enterococcus | units/100 ml | Grab | 1/Quarter | [2] |
| **PARAMETERS FOR PROTECTION OF MARINE AQUATIC LIFE** | | | | |
| Arsenic, Total Recoverable | microgram per liter (µg/L) | 24-hr Composite | 2/Year[3,4] | [2] |
| Cadmium, Total Recoverable | µg/L | 24-hr Composite | 2/Year[3,4] | [2] |
| Chromium (VI), Total Recoverable[5] | µg/L | 24-hr Composite | 2/Year[3,4] | [2] |
| Copper, Total Recoverable | µg/L | 24-hr Composite | 2/Year[3,4] | [2] |
| Lead, Total Recoverable | µg/L | 24-hr Composite | 2/Year[3,4] | [2] |
| Mercury, Total Recoverable | µg/L | 24-hr Composite | 2/Year[3,4] | [2] |
| Nickel, Total Recoverable | µg/L | 24-hr Composite | 2/Year[3,4] | [2] |
| Selenium, Total Recoverable | µg/L | 24-hr Composite | 2/Year[3,4] | [2] |
| Silver, Total Recoverable | µg/L | 24-hr Composite | 2/Year[3,4] | [2] |
| Zinc, Total Recoverable | µg/L | 24-hr Composite | 2/Year[3,4] | [2] |
| Cyanide, Total | µg/L | 24-hr Composite | 2/Year[3,4] | [2,6] |
| Chlorine, Total Residual | µg/L | Grab | 1/Day[2,7] | [2] |
| Ammonia Nitrogen, Total (as N) | mg/L | 24-hr Composite | 1/Month[2,3] | [2] |

| Parameter | Units | Sample Type | Minimum Sampling Frequency | Required Analytical Test Method |
|---|---|---|---|---|
| Chronic Toxicity | "Pass"/"Fail" (Test of Significant Toxicity)[8] | 24-hr Composite | 1/Month | [9] |
| Phenolic Compounds (nonchlorinated)[1] | µg/L | 24-hr Composite | 2/Year[3,4] | [2] |
| Phenolic Compounds (chlorinated)[1] | µg/L | 24-hr Composite | 2/Year[3,4] | [2] |
| Endosulfan[1] | µg/L | 24-hr Composite | 2/Year[3,4] | [2] |
| Endrin | µg/L | 24-hr Composite | 2/Year[3,4] | [2] |
| HCH[1] | µg/L | 24-hr Composite | 2/Year[3,4] | [2] |
| Radioactivity | picocuries per liter (pCi/L) | 24-hr Composite | 2/Year[3,4] | [2] |
| **PARAMETERS FOR PROTECTION OF HUMAN HEALTH – NONCARCINOGENS** | | | | |
| Acrolein | µg/L | Grab | 2/Year[2,3] | [2] |
| Antimony, Total Recoverable | µg/L | 24-hr Composite | 2/Year[2,3] | [2] |
| Bis (2-chloroethoxy) Methane | µg/L | 24-hr Composite | 2/Year[2,3] | [2] |
| Bis (2-chloroisopropyl) Ether | µg/L | 24-hr Composite | 2/Year[2,3] | [2] |
| Chlorobenzene | µg/L | Grab | 2/Year[2,3] | [2] |
| Chromium (III), Total Recoverable[5] | µg/L | 24-hr Composite | 2/Year[2,3] | [2] |
| Di-n-butyl Phthalate | µg/L | 24-hr Composite | 2/Year[2,3] | [2] |
| Dichlorobenzenes[1] | µg/L | Grab | 2/Year[2,3] | [2] |
| Diethyl Phthalate | µg/L | 24-hr Composite | 2/Year[2,3] | [2] |
| Dimethyl Phthalate | µg/L | 24-hr Composite | 2/Year[2,3] | [2] |
| 4,6-dinitro-2-methylphenol | µg/L | 24-hr Composite | 2/Year[2,3] | [2] |
| 2,4-dinitrophenol | µg/L | 24-hr Composite | 2/Year[2,3] | [2] |
| Ethylbenzene | µg/L | Grab | 2/Year[2,3] | [2] |
| Fluoranthene | µg/L | 24-hr Composite | 2/Year[2,3] | [2] |
| Hexachlorocyclopentadiene | µg/L | 24-hr Composite | 2/Year[2,3] | [2] |
| Nitrobenzene | µg/L | 24-hr Composite | 2/Year[2,3] | [2] |
| Thallium, Total Recoverable | µg/L | 24-hr Composite | 2/Year[2,3] | [2] |
| Toluene | µg/L | Grab | 2/Year[2,3] | [2] |
| Tributyltin | µg/L | 24-hr Composite | 2/Year[2,3] | [2] |
| 1,1,1-trichloroethane | µg/L | Grab | 2/Year[2,3] | [2] |
| **PARAMETERS FOR PROTECTION OF HUMAN HEALTH – CARCINOGENS** | | | | |
| Acrylonitrile | µg/L | Grab | 2/Year[2,3] | [2] |
| Aldrin | µg/L | 24-hr Composite | 2/Year[2,3] | [2] |
| Benzene | µg/L | Grab | 2/Year[2,3] | [2] |
| Benzidine | µg/L | 24-hr Composite | 2/Year[2,3] | [2] |
| Beryllium, Total Recoverable | µg/L | 24-hr composite | 2/Year[2,3] | [2] |
| Bis (2-chloroethyl) Ether | µg/L | 24-hr Composite | 2/Year[2,3] | [2] |
| Bis (2-ethlyhexyl) Phthalate | µg/L | 24-hr Composite | 2/Year[2,3] | [2] |
| Carbon Tetrachloride | µg/L | Grab | 2/Year[2,3] | [2] |

| Parameter | Units | Sample Type | Minimum Sampling Frequency | Required Analytical Test Method |
|---|---|---|---|---|
| Chlordane[1] | µg/L | 24-hr Composite | 2/Year[2,3] | [2] |
| Chlorodibromomethane | µg/L | Grab | 2/Year[2,3] | [2] |
| Chloroform | µg/L | Grab | 2/Year[2,3] | [2] |
| Dichlorodiphenyltrichloroethane (DDT)[1] | µg/L | 24-hr Composite | 2/Year[2,3] | [2] |
| 1,4-dichlorobenzene | µg/L | Grab | 2/Year[2,3] | [2] |
| 3,3'-dichlorobenzidine | µg/L | 24-hr Composite | 2/Year[2,3] | [2] |
| 1,2-dichloroethane | µg/L | Grab | 2/Year[2,3] | [2] |
| 1,1-dichloroethylene | µg/L | Grab | 2/Year[2,3] | [2] |
| Dichlorobromomethane | µg/L | Grab | 2/Year[2,3] | [2] |
| Dichloromethane | µg/L | Grab | 2/Year[2,3] | [2] |
| 1,3-dichloropropene | µg/L | Grab | 2/Year[2,3] | [2] |
| Dieldrin | µg/L | 24-hr Composite | 2/Year[2,3] | [2] |
| 2,4-dinitrotoluene | µg/L | 24-hr Composite | 2/Year[2,3] | [2] |
| 1,2-diphenylhydrazine | µg/L | 24-hr Composite | 2/Year[2,3] | [2] |
| Halomethanes[1] | µg/L | Grab | 2/Year[2,3] | [2] |
| Heptachlor | µg/L | 24-hr Composite | 2/Year[2,3] | [2] |
| Heptachlor Epoxide | µg/L | 24-hr Composite | 2/Year[2,3] | [2] |
| Hexachlorobenzene | µg/L | 24-hr Composite | 2/Year[2,3] | [2] |
| Hexachlorobutadiene | µg/L | 24-hr Composite | 2/Year[2,3] | [2] |
| Hexachloroethane | µg/L | 24-hr Composite | 2/Year[2,3] | [2] |
| Isophorone | µg/L | 24-hr Composite | 2/Year[2,3] | [2] |
| N-nitrosodimethylamine | µg/L | 24-hr Composite | 2/Year[2,3] | [2] |
| N-nitrosodi-N-propylamine | µg/L | 24-hr Composite | 2/Year[2,3] | [2] |
| N-nitrosodiphenylamine | µg/L | 24-hr Composite | 2/Year[2,3] | [2] |
| Polynuclear Aromatic Hydrocarbons (PAHs)[1] | µg/L | 24-hr Composite | 2/Year[2,3] | [2] |
| Polychlorinated Biphenyls (PCBs)[1] | µg/L | 24-hr Composite | 2/Year[2,3] | [2] |
| TCDD equivalents[1] | µg/L | 24-hr Composite | 2/Year[2,3] | [2] |
| 1,1,2,2-tetrachloroethane | µg/L | Grab | 2/Year[2,3] | [2] |
| Tetrachloroethylene | µg/L | Grab | 2/Year[2,3] | [2] |
| Toxaphene | µg/L | 24-hr Composite | 2/Year[2,3] | [2] |
| Trichloroethylene | µg/L | Grab | 2/Year[2,3] | [2] |
| 1,1,2-trichloroethane | µg/L | Grab | 2/Year[2,3] | [2] |
| 2,4,6-trichlorophenol | µg/L | 24-hr Composite | 2/Year[2,3] | [2] |
| Vinyl Chloride | µg/L | Grab | 2/Year[2,3] | [2] |

[1] See Attachment A for definitions of abbreviations and a glossary of common terms used in this Order.

[2] As required under 40 CFR part 136.

[3] The Discharger shall calculate and report the MER of the constituent for each sample taken. The MER shall be calculated in accordance with section VII.I.4 of this Order.

[4] The minimum frequency of monitoring for this constituent is automatically increased to twice the minimum frequency specified, if any analysis for this constituent yields a result higher than the applicable effluent limitation or performance goal specified in this Order. The increased minimum frequency of monitoring shall remain in effect until the results of a

minimum of four consecutive analyses for this constituent are below all applicable effluent limitations or performance goals specified in this Order.

[5] The Discharger may, at their option, meet this performance goal as a total chromium performance goal and monitor for total recoverable chromium in lieu of total recoverable chromium (III) or total recoverable chromium (VI).

[6] If a Discharger can demonstrate to the satisfaction of the San Diego Water Board (subject to USEPA approval) that an analytical method is available to reliably distinguish between strongly and weakly complexed cyanide, performance goals may be evaluated with the combined measurement of free cyanide, simple alkali metals cyanides, and weakly complexed organometallic cyanide complexes. In order for the analytical method to be acceptable, the recovery of free cyanide from metal complexes must be comparable to that achieved by the approved method in 40 CFR part 136, as revised May 14, 1999.

[7] Monitoring of total chlorine residual is not required on days when none of the treatment units that are subject to this Order use chlorine for disinfection. If only one sample is collected for total chlorine residual analysis on a particular day, that sample must be collected at the time when the concentration of total chlorine residual in the discharge would be expected to be greatest. The times of chlorine discharges on the days that samples are collected, and the time at which samples are collected, shall be reported.

[8] For compliance determination, chronic toxicity results shall be reported as "Pass" or "Fail." For monitoring purpose only, chronic toxicity results shall also include "Percent Effect."

[9] As specified in section VII.L of this Order and section III.C of this MRP (Attachment E).

3. The Discharger shall monitor the effluent at Monitoring Location M-005 as follows:

**Table E-5. Effluent Monitoring (Monitoring Location M-005)[1]**

| Parameter | Units | Sample Type | Minimum Sampling Frequency | Required Analytical Test Method |
|---|---|---|---|---|
| Flow | MGD | Recorder/Totalizer | Continuous | -- |
| Total Suspended Solids | mg/L | 24-hr Composite[2] | 1/Day[3,4] | [5] |
| Oil and Grease | mg/L | Grab | 1/Month[4,6] | [5] |
| Settleable Solids | ml/L | Grab | 1/Week[6] | [5] |
| Turbidity | NTU | 24-hr Composite[2] | 1/Week[6] | [5] |
| Total Dissolved Solids | mg/L | 24-hr Composite[2] | 1/Week | [5] |
| pH | Standard Units | Grab | 1/Day[3] | [5] |

[1] See Attachment A for definitions of abbreviations and a glossary of common terms used in this Order.

[2] If the discharge is intermittent, the 24-hr composite may be composed of samples taken from less than a 24-hr period. If 24-hr composite is not possible (e.g., a 24-hr composite would not yield sufficient volume to preform analytical testing), the Discharger may take a grab in lieu of the 24-hr composite.

[3] Applies 5 days per week except 7 days per week for at least 1 week during July or August of each year.

[4] The Discharger shall calculate and report the MER of the constituent for each sample taken. The MER shall be calculated in accordance with section VII.I.4 of this Order.

[5] As required under 40 CFR part 136.

[6] The minimum frequency of monitoring for this constituent is automatically increased to twice the minimum frequency specified, if any analysis for this constituent yields a result higher than the applicable effluent limitation or performance goal specified in this Order. The increased minimum frequency of monitoring shall remain in effect until the results of a minimum of four consecutive analyses for this constituent are below all applicable effluent limitations or performance goals specified in this Order.

## C. Whole Effluent Toxicity Testing Requirements

The WET refers to the overall aggregate toxic effect of an effluent measured directly by an aquatic toxicity test(s). The control of WET is one approach this Order uses to control the discharge of toxic pollutants. WET tests evaluate the 1) aggregate toxic effects of all chemicals in the effluent including additive, synergistic, or antagonistic toxicity effects; 2) the



ED_002551_00000748-00070

toxicity effects of unmeasured chemicals in the effluent; and 3) variability in bioavailability of the chemicals in the effluent.

Monitoring to assess the overall toxicity of the effluent is required to answer the following questions:

(1) Does the effluent comply with effluent limitations for toxicity thereby ensuring that water quality standards are achieved in the receiving water?

(2) If the effluent does not comply with effluent limitations for toxicity, are unmeasured pollutants causing risk to aquatic life?

(3) If the effluent does not comply with effluent limitations for toxicity, are pollutants in combinations causing risk to aquatic life?

**1. Discharge In-stream Waste Concentration (IWC) for Chronic Toxicity**

The chronic IWC is calculated by dividing 100 percent by the dilution ratio. The chronic toxicity IWC is 0.69 percent effluent.

**2. Sample Volume and Holding Time**

The total sample volume shall be determined by the specific toxicity test method used. Sufficient sample volume of the effluent shall be collected to perform the required toxicity test. Sufficient sample volume shall also be collected during accelerated monitoring for subsequent Toxicity Identification Evaluation (TIE) studies, if necessary, at each sampling event. All toxicity tests shall be conducted as soon as possible following sample collection. No more than 36 hours shall elapse before the conclusion of sample collection and test initiation.

**3. Chronic Marine Species and Test Methods**

If effluent samples are collected from outfalls discharging to receiving waters with salinity >one parts per thousand (ppt), the Discharger shall conduct the following chronic toxicity tests on effluent samples, at the Discharge IWC (0.69 percent effluent), in accordance with species and test methods in *Short-Term Methods for Estimating the Chronic Toxicity of Effluent and Receiving Waters to West Coast Marine Estuarine Organisms* (EPA/600/R-95/136, 1995). Artificial sea salts or hypersaline brine shall be used to increase sample salinity if needed. In no case shall these species be substituted with another test species unless written authorization from the San Diego Water Board is received.

a. A static renewal toxicity test with the topsmelt, *Atherinops affinis* (Larval Survival and Growth Test Method 1006.01).

b. A static non-renewal toxicity test with the purple sea urchin, *Strongylocentrotus purpuratus*/sand dollar, *Dendraster excentricus* (Fertilization Test Method 1008.0); or a static non-renewal toxicity test with the red abalone, *Haliotis rufescens* (Larval Shell Development Test Method).

c. A static non-renewal toxicity test with the giant kelp, *Macrocystis pyrifera* (Germination and Growth Test Method 1009.0).

**4. Species Sensitivity Screening**

Species sensitivity screening shall be conducted during this Order's first required sample collection, or within 24 months of the most recent screening, whichever is later. The Discharger shall collect a single effluent sample to initiate and concurrently conduct three toxicity tests using the fish, an invertebrate, and the alga species previously referenced.

This sample shall also be analyzed for the parameters required on a monthly frequency for the discharge, during that given month. As allowed under the test method for the *Atherinops affinis*, a second and third sample shall be collected for use as test solution renewal water as the seven-day toxicity test progresses. If the result of all three species is "Pass," then the species that exhibits the highest "Percent Effect" at the discharge IWC during species sensitivity screening shall be used for routine monitoring. If only one species fails, then that species shall be used for routine monitoring. Likewise, if two or more species result in "Fail," then the species that exhibits the highest "Percent Effect" at the discharge IWC during the suite of species sensitivity screening shall be used for routine monitoring.

Species sensitivity rescreening is required every 24 months. The Discharger shall rescreen with the marine vertebrate species, a marine invertebrate species, and the alga species previously referenced, and continue to monitor with the most sensitive species. If the first suite of rescreening tests demonstrates that the same species is the most sensitive then the rescreening does not need to include more than one suite of tests. If a different species is the most sensitive or if there is ambiguity, then the Discharger may proceed with suites of screening tests for a minimum of three, but not to exceed five suites.

The species used during routine monitoring shall be the most sensitive species from the most recent species sensitivity screening.

During the calendar month, toxicity tests used to determine the most sensitive test species shall be reported as effluent compliance monitoring results for the chronic toxicity maximum daily effluent limitation (MDEL).

**5. Quality Assurance (QA) and Additional Requirements**

The QA measures, instructions, and other recommendations and requirements are found in the test methods manual previously referenced. Additional requirements are specified below.

a. The discharge is subject to determination of "Pass" or "Fail" from a chronic toxicity test using the Test of Significant Toxicity (TST) statistical t-test approach described in *National Pollutant Discharge Elimination System Test of Significant Toxicity Implementation Document* (EPA 833- R-10-003, 2010), Appendix A, Figure A-1 and Table A-1 and Appendix B, Table B-1. The null hypothesis (Ho) for the TST statistical approach is: Mean discharge IWC response ≤0.75 × Mean control response. A test result that rejects this null hypothesis is reported as "Pass." A test result that does not reject this null hypothesis is reported as "Fail." This is a t-test (formally Student's t-test), a statistical analysis comparing two sets of replicate observations—in the case of WET, only two test concentrations (i.e., a control and IWC). The purpose of this statistical test is to determine if the means of the two sets of observations are different (i.e., if the IWC or receiving water concentration differs from the control (the test result is "Pass" or "Fail"). The Welch's t-test employed by the TST statistical approach is an adaptation of Student's t-test and is used with two samples having unequal variances. The relative "Percent Effect" at the discharge IWC is defined and reported as: ((Mean control response - Mean discharge IWC response) ÷ Mean control response) × 100.

b. If the effluent toxicity test does not meet all test acceptability criteria (TAC) specified in the referenced test method, *Short-term Methods for Estimating the Chronic Toxicity of Effluents and Receiving Waters to West Coast Marine and Estuarine*



ED_002551_00000748-00072

*Organisms* (EPA/600/R-95/136, 1995), the test should be declared invalid, then the Discharger must resample and re-test within 14 days of test termination.

c. Dilution water and control water, including brine controls, shall be 1-mircrometer-filtered uncontaminated natural seawater, hypersaline brine prepared using uncontaminated natural seawater, or laboratory water prepared and used as specified in the test methods manual. Dilution water and control water, including brine controls, shall be uncontaminated natural water, as specified in the test methods manual. If dilution water and control water is different from test organism culture water, then a second control using culture water shall also be used.

d. Monthly reference toxicant testing is sufficient. All reference toxicant test results should be reviewed and reported using the effects concentration at 25 percent (EC25).

e. The Discharger shall perform toxicity tests on final effluent samples. Chlorine and ammonia shall not be removed from the effluent sample prior to toxicity testing, unless explicitly authorized under this section of this MRP and the rationale is explained in the Fact Sheet (Attachment F).

**6. Preparation of an Initial Investigation Toxicity Reduction Evaluation (TRE) Work Plan**

The Discharger shall prepare and submit a copy of the Discharger's Initial Investigation TRE Work Plan to the San Diego Water Board for approval within 90 days of the effective date of this Order. If the San Diego Water Board does not disapprove the work plan within 60 days, the work plan shall become effective. The Discharger shall use USEPA manual EPA/833B-99/002 (municipal), or most current version, as guidance. At a minimum, the work plan must contain the provisions in Attachment I, *Generic Toxicity Reduction Evaluation (TRE) Work Plan*. The TRE Work Plan shall describe the steps that the Discharger intends to follow if toxicity is detected, and shall include, at a minimum:

a. A description of the investigation and evaluation techniques that will be used to identify potential causes and sources of toxicity, effluent variability, and treatment system efficiency;

b. A description of the Discharger's methods of maximizing in-house treatment efficiency and good housekeeping practices, and a list of all chemicals used in the operation of the Facilities; and,

c. If a TIE is necessary, an indication of the person who would conduct the TIEs (i.e., an in-house expert or an outside contractor).

**7. Accelerated Monitoring Schedule for Maximum Daily Single Result: "Fail"**

The Maximum Daily single result shall be used to determine if accelerated testing needs to be conducted.

Once the Discharger becomes aware of this result, the Discharger shall notify the San Diego Water Board and implement an accelerated monitoring schedule within five calendar days of the receipt of the result. However, if the sample is contracted out to a commercial laboratory, the Discharger shall ensure that the San Diego Water Board is notified and the first of four accelerated monitoring tests is initiated within seven calendar days of the Discharger becoming aware of the result. The accelerated monitoring schedule shall consist of four toxicity tests (including the discharge IWC), conducted at approximately two week intervals, over an eight week period; in preparation for the TRE process and associated reporting, these results shall also be reported using the EC25. If



ED_002551_00000748-00073

each of the accelerated toxicity tests results in "Pass," the Discharger shall return to routine monitoring for the next monitoring period. If one of the accelerated toxicity tests results in "Fail," the Discharger shall immediately implement the TRE Process conditions set forth below. During accelerated monitoring schedules, only TST results ("Pass" or "Fail") for chronic toxicity tests shall be reported as effluent compliance monitoring results for the chronic toxicity MDEL.

**8. TRE Process**

During the TRE Process, minimum effluent monitoring shall resume and TST results ("Pass" or "Fail" and "Percent Effect") for chronic toxicity tests shall be reported as effluent monitoring results for the chronic toxicity MDEL.

a. Preparation and Implementation of Detailed TRE Work Plan. The Discharger shall immediately initiate a TRE using, according to the type of treatment facility, USEPA manual *Toxicity Reduction Evaluation Guidance for Municipal Wastewater Treatment Plants* (EPA/833/B-99/002, 1999) and, within 15 days of receiving validated results, submit to the San Diego Water Board a Detailed TRE Work Plan, which shall follow the Initial Investigation TRE Work Plan revised as appropriate for this toxicity event. It shall include the following information, and comply with additional conditions set by the San Diego Water Board:

   i. Further actions by the Discharger to investigate, identify, and correct the causes of toxicity;

   ii. Actions the Discharger will take to mitigate the effects of the discharge and prevent the recurrence of toxicity; and

   iii. A schedule for these actions, progress reports, and the final report.

b. TIE Implementation. The Discharger may initiate a TIE as part of a TRE to identify the causes of toxicity using the same species and test method and, as guidance, USEPA manuals: *Methods for Aquatic Toxicity Identification Evaluations: Phase I Toxicity Characterization Procedures* (EPA/600/6-91/003, 1991); *Methods for Aquatic Toxicity Identification Evaluations, Phase II Toxicity Identification Procedures for Samples Exhibiting Acute and Chronic Toxicity* (EPA/600/R-92/080, 1993); *Methods for Aquatic Toxicity Identification Evaluations, Phase III Toxicity Confirmation Procedures for Samples Exhibiting Acute and Chronic Toxicity* (EPA/600/R-92/081, 1993); and *Marine Toxicity Identification Evaluation (TIE): Phase I Guidance Document* (EPA/600/R-96-054, 1996). The TIE should be conducted on the species demonstrating the most sensitive toxicity response.

c. Many recommended TRE elements parallel required or recommended efforts for source control, pollution prevention, and storm water control programs. Whenever possible, TRE efforts should be coordinated with such efforts. As toxic substances are identified or characterized, the Discharger shall continue the TRE by determining the sources and evaluating alternative strategies for reducing or eliminating the substances from the discharge. All reasonable steps shall be taken to reduce toxicity to levels consistent with toxicity evaluation parameters.

d. The Discharger shall continue to conduct the minimum effluent monitoring while the TRE and/or TIE process is taking place. Additional accelerated monitoring and TRE Work Plans are not required once a TRE is begun.

e. The San Diego Water Board recognizes that toxicity may be episodic and identification of causes and reduction of sources of toxicity may not be successful in



ED_002551_00000748-00074