Appendix B: Analytical Methods, Reporting Limits and Method Detection Levels[1]				
Parameter	Analytical Method	Method Detection Levels	Reporting Limit	Units
FISH TISSUE ANALYSIS				
Chlordane	EPA 8081A	5.30	10.0	ug/kg
Dieldrin	EPA 8081A	0.44	1.0	ug/kg
Toxaphene[2]	EPA 8081A	6.30	20.0	ug/kg
DDT				
o'p-DDT	EPA 8081A	0.31	1.0	ug/kg
p,p'-DDT	EPA 8081A	0.44	1.0	ug/kg
PCBs[3]				
PCB008	EPA 8270C SIM PCB Congeners	0.14	0.40	ug/kg
PCB018	EPA 8270C SIM PCB Congeners	0.071	0.20	ug/kg
PCB028	EPA 8270C SIM PCB Congeners	0.034	0.20	ug/kg
PCB044	EPA 8270C SIM PCB Congeners	0.087	0.20	ug/kg
PCB052	EPA 8270C SIM PCB Congeners	0.063	0.20	ug/kg
PCB066	EPA 8270C SIM PCB Congeners	0.10	0.20	ug/kg
PCB101	EPA 8270C SIM PCB Congeners	0.098	0.20	ug/kg
PCB105	EPA 8270C SIM PCB Congeners	0.055	0.20	ug/kg
PCB118	EPA 8270C SIM PCB Congeners	0.084	0.20	ug/kg
PCB128	EPA 8270C SIM PCB Congeners	0.10	0.20	ug/kg
PCB 138	EPA 8270C SIM PCB Congeners	0.094	0.40	ug/kg
PCB 153	EPA 8270C SIM PCB Congeners	0.17	0.40	ug/kg
PCB170	EPA 8270C SIM PCB Congeners	0.063	0.20	ug/kg
PCB180	EPA 8270C SIM PCB Congeners	0.042	0.20	ug/kg
PCB187	EPA 8270C SIM PCB Congeners	0.084	0.20	ug/kg
PCB195	EPA 8270C SIM PCB Congeners	0.12	0.20	ug/kg
PCB206	EPA 8270C SIM PCB Congeners	0.19	0.20	ug/kg
PCB209	EPA 8270C SIM PCB Congeners	0.15	0.20	ug/kg
Footnotes				
1 - Reporting Limits (RLs) and Method Detection Levels (MDLs) provided are those provided by Eurofins Laboratory for the fish tissue analysis required under the Harbor Toxics TMDL Monitoring Program				
2 - The MDL and RL provided for toxaphene are those proivded by Eurofins Laboratory. The MDL and RL for toxaphene is subject to change to a lower MDL and RL for comparability with applicable targets depending on the conclusion of the MDL/RL studies being conducted by Eurofins' subcontract laboratory.				
3 - Select PCB MDLs and RLs are provided, however, total PCBs shall be defined as the sum of all 209 PCB congeners				

APPENDIX C:

HARBOR TOXICS TMDL TARGETS

DRAFT

Appendix C: Harbor Toxics TMDL Targets[1,2]

Water Column Targets	
Parameter	**Waste Load Allocation (ug/L)**
Metals	
Copper	3.73
Lead	8.52
Zinc	85.6
Organics	
PAHs	0.049
Chlordane	0.00059
4'4 DDT	0.00059
Dieldrin	0.00014
Total PCBs	0.00017

Sediment Targets	
Parameter	**Marine Sediment (mg/kg)**
Metals	
Cadmium	1.2
Copper	34
Lead	46.7
Mercury	0.15
Zinc	150
Organics	
Parameter	**Marine Sediment (ug/kg)**
Chlordane, total	0.5
Dieldrin	0.02
Toxaphene	0.1
Total PCBs	22.7
Benzo[a]anthracene	261
Benzo[a]pyrene	430
Chrysene	384
Pyrene	665
2-methlnapththalene	201
Dibenz[a,h] anthracene	260
Phenanthrene	240
Hi MW PAHs	1700
Lo MW PAHs	552
Total PAHs	4022
Total DDT	1.58

Fish Tissue Targets	
Parameter	**Fish Tissue Target (ug/kg)**
Organics	
Chlordane	5.6
Dieldrin	0.46
Total DDT	21
Total PCBs	3.6
Total PAHs	5.47
Toxaphene	6.1

1 – Water targets were determined by the Basin Plan and the California Toxics Rule (CTR) and are included in Attachment A to Resolution No. R11-008.

2 –TMDL targets for the Dominguez Channel Estuary are applicable during both dry and wet weather.

DRAFT

APPENDIX D:

CHAIN OF CUSTODY

DRAFT

Los Angeles Refinery, Wilmington Chain Of Custody Record

Eurofins Laboratory
7440 Lincoln Way
Garden Grove, CA 92841
Tel: (714) 895-5494

Representative to be invoiced:
Los Angeles Refinery - Wilmington Operations
Attn: Robert Nguyen
23208 S. Alameda Street
Carson, CA 90745

COC - WATER COLUMN

Harbor Toxics TMDL Monitoring Program

DATE: _____

PAGE: 1 of 1

CONSULTANT COMPANY: Los Angeles Refinery Wilmington

ADDRESS: 2101 E. Pacific Coast Highway

CITY: Wilmington, CA 90744

TELEPHONE: 310-847-5645 | FAX: 310-847-5782 | E-MAIL: Robert.T.Nguyen@andeavor.com

SITE ADDRESS (Street and City): Los Angeles Refinery Wilmington, 2101 E. Pacific Coast Highway

Individual NPDES Permit No. CA0003778
Order No. R4-2017-0095

PROJECT CONTACT (Report to): Robert Nguyen (310)847-5645

CONSULTANT PROJECT NO.:

SAMPLER NAME(S) (Print):

LAB USE ONLY

TURNAROUND TIME (BUSINESS DAYS):
☐ 10 DAYS ☑ 5 DAYS ☐ 72 HOURS ☐ 48 HOURS ☐ 24 HOURS ☐ LESS THAN 24 HOURS

A10.G16
☑ NPDES PERMIT FORMAT

SPECIAL INSTRUCTIONS OR NOTES: TEMPERATURE ON RECEIPT C°

Report all methods to MDLs / Multiple dilutions for low RLs
EPA 8270- Use 2L for extraction (report DF=0.5x)
EPA 8081- low level ML (use Marine RLs)

REQUESTED ANALYSIS

FIELD MEASUREMENTS AND EQUIPMENT CLEANING VERIFICATION RECORDED IN SEPARATE FIELD COLLECTION DATA SHEET.

SAMPLE PRESERVATION, SEE QAPP APPENDIX A FOR SAMPLE CONTAINERS, FORM OF PRESERVATION, AND HOLDING TIMES. IF SAMPLES ARE PRESERVED IN A DIFFERENT MANNER, RECORD IN FIELD

LAB USE ONLY	Field Sample Identification	SAMPLING DATE	SAMPLING TIME	MATRIX	NO. OF CONT.	Metals - Copper, Lead and Zinc	DDT	PCBs	PAHs: Benzo(a)anthracene, benzo(a)pyrene, chrysene, phenanthrene, and pyrene																			
	Monitoring Station 01			Aq.		X	X	X	X																			Time Samples Placed on Ice
	Monitoring Station 03			Aq.		X	X	X	X																			Time Samples Placed on Ice

NOTE: ALL QA/QC ITEMS MUST BE RUN ON THE SAME DATES THE SAMPLES WERE ACTUALLY ANALYZED.

REPORT ALL APPLICABLE MDLs AND RLs FOR ALL ANALYZED PARAMETERS

E-mail Results to
Robert Nguyen: Robert.T.Nguyen@andeavor.com
Chelsea Dreyer, WGR: cdreyer@wgr-sw.com

Relinquished by: (Signature)	Received by: (Signature)	Date:	Time:
Relinquished by: (Signature)	Received by: (Signature)	Date:	Time:
Relinquished by: (Signature)	Received by: (Signature)	Date:	Time:

LAST REVISED: 8/9/18

Los Angeles Refinery, Wilmington Chain Of Custody Record

Eurofins Laboratory 7440 Lincoln Way Garden Grove, CA 92841 Tel: (714) 895-5494	**Representative to be invoiced:** Los Angeles Refinery - Wilmington Operations Attn: Robert Nguyen 23208 S. Alameda Street Carson, CA 90745	COC - WATER COLUMN TSS **Harbor Toxics TMDL**		DATE: _____ PAGE: ___1___ of ___1___

CONSULTANT COMPANY: **Los Angeles Refinery Wilmington**

ADDRESS: **2101 E. Pacific Coast Highway**

CITY: **Wilmington, CA 90744**

TELEPHONE: **310-847-5645** FAX: **310-847-5782** E-MAIL: Robert.T.Nguyen@andeavor.com

SITE ADDRESS (Street and City): **Los Angeles Refinery Wilmington**
2101 E. Pacific Coast Highway

Individual NPDES Permit No. CA0003778
Order No. R4-2017-0095

PROJECT CONTACT (Report to): **Robert Nguyen (310)847-5645**

CONSULTANT PROJECT NO.:

SAMPLER NAME(S) (Print):

LAB USE ONLY

TURNAROUND TIME (BUSINESS DAYS):
☐ 10 DAYS ☑ 5 DAYS ☐ 72 HOURS ☐ 48 HOURS ☐ 24 HOURS ☐ LESS THAN 24 HOURS

A10:G16
☑ NPDES PERMIT FORMAT _____

SPECIAL INSTRUCTIONS OR NOTES: TEMPERATURE ON RECEIPT C°

Report all methods to MDLs / Multiple dilutions for low RLs
EPA 8270- Use 2L for extraction (report DF=0.5x)
EPA 8081- low level ML (use Marine RLs)

REQUESTED ANALYSIS

FIELD MEASUREMENTS AND EQUIPMENT CLEANING VERIFICATION RECORDED IN SEPARATE FIELD COLLECTION DATA SHEET.

SEE QAPP APPENDIX A FOR SAMPLE CONTAINERS, FORM OF PRESERVATION, AND HOLDING TIMES. IF SAMPLES ARE PRESERVED IN A DIFFERENT MANNER, RECORD IN FIELD COLLECTION DATA SHEET

LAB USE ONLY	Field Sample Identification	SAMPLING DATE	SAMPLING TIME	MATRIX	NO. OF CONT.	Metals - Copper, Lead and Zinc	DDT	PCBs	PAHs: Benzo(a)anthracene, benzo(a)pyrene, chrysene, phenanthrene, and pyrene																	
	Monitoring Station 01			Aq.		X	X	X	X																	Time Samples Placed on Ice
	Monitoring Station 03			Aq.		X	X	X	X																	Time Samples Placed on Ice

E-mail Results to
Robert Nguyen: Robert.T.Nguyen@andeavor.com
Chelsea Dreyer, WGR: cdreyer@wgr-sw.com

NOTE: ALL QA/QC ITEMS MUST BE RUN ON THE SAME DATES THE SAMPLES WERE ACTUALLY ANALYZED.

REPORT ALL APPLICABLE MDLs AND RLs FOR ALL ANALYZED PARAMETERS

Relinquished by: (Signature)	Received by: (Signature)	Date:	Time:
Relinquished by: (Signature)	Received by: (Signature)	Date:	Time:
Relinquished by: (Signature)	Received by: (Signature)	Date:	Time:

LAST REVISED: 8/9/18

TSS

LARW - Harbor Toxics TMDL Storm Water COCs (revised)

Los Angeles Refinery, Wilmington Chain Of Custody Record

Eurofins Laboratory 7440 Lincoln Way Garden Grove, CA 92841 Tel: (714) 895-5494	**Representative to be invoiced:** Los Angeles Refinery - Wilmington Operations Attn: Robert Nguyen 23208 S. Alameda Street Carson, CA 90745	**COC - Sediment** **Harbor Toxics TMDL**		DATE: _____ PAGE: ___1___ of ___2___

CONSULTANT COMPANY: **Los Angeles Refinery Wilmington**

ADDRESS: **2101 E. Pacific Coast Highway**

CITY: **Wilmington, CA 90744**

TELEPHONE: **310-847-5645** FAX: **310-847-5782** E-MAIL: Robert.T.Nguyen@andeavor.com

SITE ADDRESS (Street and City): **Los Angeles Refinery Wilmington**
2101 E. Pacific Coast Highway

Individual NPDES Permit No. CA0003778
Order No. R4-2017-0095

PROJECT CONTACT (Report to): **Robert Nguyen (310)847-5645**

CONSULTANT PROJECT NO.:

SAMPLER NAME(S) (Print):

LAB USE ONLY

TURNAROUND TIME (BUSINESS DAYS):
☐ 10 DAYS ☑ 5 DAYS ☐ 72 HOURS ☐ 48 HOURS ☐ 24 HOURS ☐ LESS THAN 24 HOURS

☑ NPDES PERMIT FORMAT _____

SPECIAL INSTRUCTIONS OR NOTES: TEMPERATURE ON RECEIPT C°

Report all methods to MDLs / Multiple dilutions for low RLs
EPA 8270- Use 2L for extraction (report DF=0.5x)
EPA 8081- low level ML (use Marine RLs)

REQUESTED ANALYSIS

FIELD MEASUREMENTS AND EQUIPMENT CLEANING VERIFICATION RECORDED IN SEPARATE FIELD COLLECTION DATA SHEET.

SEE QAPP APPENDIX A FOR SAMPLE CONTAINERS, FORM OF PRESERVATION, AND HOLDING TIMES. IF SAMPLES ARE PRESERVED IN A DIFFERENT MANNER, RECORD IN FIELD COLLECTION DATA

LAB USE ONLY	Field Sample Identification	SAMPLING DATE	SAMPLING TIME	MATRIX	NO. OF CONT.	Total Organic Carbon	Metals*	PAHs*	Pesticides*	PCBs*	Benthic Community Effect	Sediment Toxicity	Time Samples Placed on Ice
	Monitoring Station 03			Sediment		X	X	X	X	X	X	X	

E-mail Results to
Robert Nguyen: Robert.T.Nguyen@andeavor.com
Chelsea Dreyer, WGR: cdreyer@wgr-sw.com

NOTE:
* - CONSTITUENTS REQUIRED LISTED IN ATTACHMENT A OF SQO PART 1 (PAGE 2 OF COC)

ALL QA/QC ITEMS MUST BE RUN ON THE SAME DATES THE SAMPLES WERE ACTUALLY ANALYZED.

REPORT ALL APPLICABLE MDLs AND RLs FOR ALL ANALYZED PARAMETERS

Relinquished by: (Signature)	Received by: (Signature)	Date:	Time:
Relinquished by: (Signature)	Received by: (Signature)	Date:	Time:
Relinquished by: (Signature)	Received by: (Signature)	Date:	Time:

LAST REVISED: 8/1/18

Los Angeles Refinery, Wilmington Chain Of Custody Record

Eurofins Laboratory
7440 Lincoln Way
Garden Grove, CA 92841
Tel: (714) 895-5494

Representative to be invoiced:
Los Angeles Refinery - Wilmington Operations
Attn: Robert Nguyen
23208 S. Alameda Street
Carson, CA 90745

COC - Fish Tissue

Harbor Toxics TMDL Monitoring Program

DATE: _____

PAGE: 1 of 1

CONSULTANT COMPANY: **Los Angeles Refinery Wilmington**

ADDRESS: **2101 E. Pacific Coast Highway**

CITY: **Wilmington, CA 90744**

TELEPHONE: **310-847-5645** FAX: **310-847-5782** E-MAIL: Robert.T.Nguyen@andeavor.com

SITE ADDRESS (Street and City): **Los Angeles Refinery Wilmington**
2101 E. Pacific Coast Highway

Individual NPDES Permit No. CA0003778
Order No. R4-2017-0095

PROJECT CONTACT (Report to): **Robert Nguyen (310)847-5645**

CONSULTANT PROJECT NO.:

SAMPLER NAME(S) (Print):

LAB USE ONLY

TURNAROUND TIME (BUSINESS DAYS):
☐ 10 DAYS ☑ 5 DAYS ☐ 72 HOURS ☐ 48 HOURS ☐ 24 HOURS ☐ LESS THAN 24 HOURS

☑ NPDES PERMIT FORMAT

SPECIAL INSTRUCTIONS OR NOTES: TEMPERATURE ON RECEIPT C°

Report all methods to MDLs / Multiple dilutions for low RLs
EPA 8270- Use 2L for extraction (report DF=0.5x)
EPA 8081- low level ML (use Marine RLs)

REQUESTED ANALYSIS

FIELD MEASUREMENTS AND EQUIPMENT CLEANING VERIFICATION RECORDED IN SEPARATE FIELD COLLECTION DATA SHEET.

SEE QAPP APPENDIX A FOR SAMPLE CONTAINERS, FORM OF PRESERVATION, AND HOLDING TIMES. IF SAMPLES ARE PRESERVED IN A DIFFERENT MANNER, RECORD IN FIELD COLLECTION DATA SHEET.

LAB USE ONLY	Field Sample Identification	SAMPLING DATE	SAMPLING TIME	MATRIX	NO. OF CONT.	Chlordane	Dieldrin	Toxaphene	DDT	PCBs
	Monitoring Station 04			Tissue		X	X	X	X	X
	E-mail Results to Robert Nguyen: Robert.T.Nguyen@andeavor.com Chelsea Dreyer, WGR: cdreyer@wgr-sw.com									

NOTES:
ALL QA/QC ITEMS MUST BE RUN ON THE SAME DATES THE SAMPLES WERE ACTUALLY ANALYZED.

REPORT ALL APPLICABLE MDLs AND RLs FOR ALL ANALYZED PARAMETERS

Time Sample Placed on Ice

SAMPLE LOCATION / COORDINATES:

_____

Relinquished by: (Signature)	Received by: (Signature)	Date:	Time:
Relinquished by: (Signature)	Received by: (Signature)	Date:	Time:
Relinquished by: (Signature)	Received by: (Signature)	Date:	Time:

LAST REVISED 5/14/18

Tissue

LARW - Harbor Toxics TMDL Storm Water COCs (revised)

APPENDIX E:

FIELD MONITORING FORMS

DRAFT

HARBOR TOXICS TMDL FIELD COLLECTION DATA SHEET

StationID:	**Date (mm/dd/yyyy):**	**SampleTime (1st sample):**	**Sampled By:**
Station Location:	**Arrival Time:** / **Departure Time:**	**Form of preservation:** ice other : _____	
Purpose (circle applicable): Water Chemistry / TSS Sediment Fish Tissue		**Time placed on ice / preserved:**	

Location:	GPS/DGPS	Lat (dd.ddddd)	Long (ddd.ddddd)	**Additional Sample Preservation Notes:**
GPS Device:	Target:		-	
Accuracy (ft / m):	Actual:		-	

FIELD OBSERVATIONS (CIRCLE ALL THAT APPLIES)

WATER ODOR	None Sewage Petroleum Sulfides Mixed Other_____	**WIND DIRECTION:**
SKY COVER:	Clear Partly Cloudy Overcast Fog Smoky Hazy Other:_____	**PRECIPITATION:** None Fog Drizzle Rain Snow
OTHER PRESENCE:	Floating and Suspended Materials Oily Sheen Turbidity Odor Foam Trash Discoloration Other_____	**Precipitation Amount: (last 24 hours)** inches **WATER CLARITY:** Clear Cloudy Murky
WATERCOLOR:	Colorless Green Yellow Brown Other: _____	

FIELD MEASUREMENTS:

Type of Sample:	Sample Type	Flow	Water Temp (°F)	pH (S.U.)	Dissolved Oxygen (mg/L or %)	Salinity (ppt)	Depth (m)	Equipment Decontaminated:
Water Column Samples								☐ Yes
TSS Samples								☐ Yes
Sediment Samples								☐ Yes

CALIBRATION INFORMATION:

Instrument Type:	Flow	Temp.	pH	Dissolved Oxygen	Salinity	Notes:
Instrument:						
Calibration Date:						
Calibration Standards						
Calibration Readings						

FIELD STAFF CONFIRMATION OF FIELD DATA SHEET

My signature below certifies that I have reviewed the information recorded in this Field Collection Data Sheet and determined it to be complete:

Date / Time Reviewed:	Signature
Name:	
Title:	

APPENDIX F:

SWAMP COLLECTION OF WATER AND BED SEDIMENT WITH ASSOCIATED FIELD MEASUREMENTS AND PHYSICAL HABITAT IN CALIFORNIA

DRAFT

Collections of Water and Bed Sediment Samples with Associated Field Measurements and Physical Habitat in California.Version 1.1 updated March-2014

The SOPs below are for reference and information purposes only, the documents are recommended, not required by the Surface Water Ambient Monitoring Program (SWAMP). Please see the SWAMP Quality Assurance Program Plan at: http://www.waterboards.ca.gov/water_issues/programs/swamp/tools.shtml#qa for more information regarding SWAMP QA/QC requirements.

Table of Contents

Acknowledgements.....2

Field Measurements.....3

Probe measurements.....6

Flow.....13

Summary of Significant Figures for Reporting Field Parameters.....27

Beaufort Scale.....28

Field Collection Procedures for Water Samples.....29

Summary of Sample Container, Volume, Initial Preservation, and Holding Time Recommendations for Water Samples.....52

Field Collection Procedures for Bed Sediment Samples.....56

Summary of Sample Container, Volume, Preservation, and Storage Requirements for SWAMP Bed Sediment, Biota, and Tissue Samples (for contaminant analysis.....62

Acknowledgements:

This procedure has been modified from the Texas Natural Resources Conservation Commission's Procedure Manual for Surface Water Quality Monitoring, with major input from the United State's Geological Survey's (USGS's) National Water Quality Assessment (NAWQA) Protocol for Collection of Stream Water Samples, for which due credit is here with given.

The current version of these protocols was written by Sean Mundell (Moss Landing Marine Labs MPSL Field Sampling Team) with most of the credit to Max Puckett (CDFW) for originally writing this document for part of the original SWAMP QAMP, 2001. Significant contributions also came from Eric von der Geest and the (SWAMP) Quality Assurance (QA) Team, The SWAMP Data Management Team(DMT), Billy Jakl(MPSL), Mary Hamilton (RWQCB 3), and Bettina Sohst(former MPSL employee),

Field Measurements

Field Data Sheets

Field data sheets are used to record field observations, probe measurements, and water and sediment chemistry sampling. Field data sheets are provided on the SWAMP Data Management Resources Website at: Water Quality Field Data Sheet *(updated 12/18/12).*

There are guidelines provided below to standardize what is recorded on all data sheets and that should be helpful in completing each form. The entries discussed below and on the field data sheets are recorded at each sampling site.

Notes to Standardize SWAMP Field Data Sheets (For in the field use)

KEY REMINDERS to IDENTIFY SAMPLES:

1. **SAMPLE TIME** is the SAME for all samples (Water, Sediment, & Probe) taken at the sampling event. Use time of FIRST sample; important for COC (is used for identification of sample).
2. **LEFT BANK/RIGHT BANK**
   Left bank is defined as the bank to the left of the observer when facing downstream, and the *right bank* is to the right of the observer when facing downstream
3. **GROUP;** many different ways to do a group, one suggestion is to create groups which assign trips to assess frequency of field QA

COLLECTION DETAILS:

1. **PERSONELL**: S. Mundell, G Ichikawa (first person listed is crew leader)
2. **LOCATION:** Bank, Thalweg, Mid-Channel, Open Water. Use "open water" in bay/estuary/harbor only if no distinguishable channel exists
3. **GRAB vs. INTEGRATED**: GRAB samples are when bottles are filled from a single depth; INTEGRATED sample are taken from MULTIPLE depths/grabs and combined.
   A. GRAB: use 0.1 for subsurface samples; if too shallow to submerge bottle; depth = 0
   B. INTEGRATED: -88 in depth sampled, record depths combined in sample comments
4. **TARGET LAT/LONG**: Refers to the existing station location that the sampling crew is trying to achieve; can be filled out prior to sampling
5. **ACTUAL LAT/ LONG**: is the location of the current sample event.
6. **HYDROMODIFICATION:** Describe existing hydro modifications such as a grade control, drainage pipes, bridge, culvert
7. **HYDROMOD LOC**: if there is an IMMEDIATE (with in range potentially effecting sample) hydro modification; Is the hydro modification upstream/downstream/within area of sample; if there is no hydro modification, NA is appropriate
8. **STREAM WIDTH and DEPTH**: describe in meters at point of sample.

FIELD OBSERVATIONS: (each one of these observations has a comment field in the database so use comment space on data sheet to add information about an observation if necessary)

1. **PICTURES:** use space to record picture numbers given by camera; be sure to rename accordingly back in the office. (StationCode_yyyy_mm_dd_unique code)
2. **WADEABILITY**: in general, is water body being sampled wadeable to the average person AT the POINT of SAMPLE
3. **DOMINANT SUBSTRATE**: if possible; describe DOMINANT substrate type; use UNK if you cannot see the dominant substrate type
4. **BEAUFORT SCALE**: use scale 0-12; refer to scales listed on page 28
5. **WIND DIRECTION**: records the direction from which the wind is blowing
6. **OTHER PRESENCE**: VASCULAR refers to terrestrial plants or submerged aquatic vegetation

(SAV) and NONVASCULAR refers to plankton, periphyton etc. These definitions apply to vegetation IN the water at the immediate sampling area.

7. **OBSERVED FLOW**: Visual estimates of flow range in cubic feet/second. Flow should be recorded even if flow is visible but not measurable on that sampling visit. This is an observational measurement that is highly dependent on the knowledge of monitoring personnel.
8. **WATER COLOR**: This is the color of the water from standing creek side
9. **WATER CLARITY**: this describes the clarity of the water while standing creek side; clear represents water that is clear to the bottom, cloudy may not be clear to bottom but greater than 4 inches can be seen through the water column.
10. **PRECIPITATION LAST24hrs:** refers to field crew's best categorization of rainfall in the last 24 hrs; may or may not effect Overland Runoff Last 24 hrs
11. **OVERLAND RUNOFF LAST 24 hrs**: Significant precipitation is defined as any amount that visibly influences water quality. Light Precipitation = fog, drizzle, and/or light rain with no overland runoff; Mod to Heavy Precipitation = rain such that site probably or definitely received at least some overland runoff.
12. **SEDIMENT COMP**: generally described sediments used for chemistry sample Note: these reminders do not give all details needed to maintain equivalent SWAMP sampling protocols, they are strictly for "infield" use to help insure comparability of field observations.
13. **WATER APPEARANCE:** Note general appearance (e.g., color, unusual amount of suspended matter, debris or foam)
14. **SEDIMENT APPEARANCE** Color, Odor and sediment composition should be noted.
15. **WEATHER:** Note recent meteorological events that may have impacted water quality; (e.g., heavy rains, cold front, very dry, very wet)
16. **BIOLOGICAL ACTIVITY:** Note excessive macrophyte, phytoplankton or periphyton growth. The observation of water color and excessive algal growth is very important in explaining high chlorophyll a values. Other observations such as presence of fish, birds and spawning fish are noted.
17. **WATERSHED or INSTREAM ACTIVITIES:** Note in stream or drainage basin activities or events that is impacting water quality (e.g., bridge construction, shoreline mowing, livestock watering upstream).
18. **RECORD of PERTINENT OBSERVATIONS RELATED to WATER QUALITY and STREAM USES:** If the water quality conditions are exceptionally poor, note that standards are not met in the observations, (e.g., dissolved oxygen is below minimum criteria). Note uses (e.g., swimming, wading, boating, fishing, irrigation pumps, navigation). Eventually, for setting water quality standards, the level of use will be based on comments related to the level of fishing and swimming activities observed at a station.
19. **SPECIFIC SAMPLE INFORMATION:** Note specific comments about the sample itself that may be useful in interpreting the results of the analysis (e.g., number of sediment grabs, or type and number of fish in a tissue sample). If the sample was collected for a complaint or fish kill, make a note of this in the observation section.
20. **MISSING PARAMETERS:** If a scheduled parameter or group of parameters is not collected, make some note of this in the comments.
21. **RECORD of DATA SUBMISSION:** Initials and date are recorded on the field data sheet showing a record that the data has been transcribed onto data forms and submitted to the SWAMP data management staff.

Record of Samples Collected for Purposes of Chemical Analysis

The general types of chemical samples to be collected are listed for each site, since this may vary from site-to-site (e.g., metals-in-water, pesticides-in-sediments, conventional water quality). Analyses authorization forms are recommended since different authorized laboratories perform different chemical analyses. The method of preservation for each chemical sample is recorded, as appropriate on the Chain of Custody Form (COC).

Field Data Measurements

While collecting water samples (see Field Collection Procedures for Water Samples page 29), record appropriate field measurements. When field measurements are made with a multi-parameter instrument, it is preferable to place the sonde in the body of water to be sampled and allow the dissolved oxygen (D.O.) to equilibrate. D.O. usually takes the longest to equilibrate out of the probe measurements (pH, Temperature, Conductivity and Turbidity) Field measurements are made at the centroid of flow, if the stream visually appears to be completely mixed from shore to shore. *Centroid* is defined as the midpoint of that portion of the stream width which contains 50% of the total flow. Probe measurements and water sampling are best to collect in the stream location that best represents the entire stream. For routine field measurements, the date, time and depth are reported as a grab. Quality control requirements for field measurements are listed in Quality Control and Sample Handling Tables for Field Measurements in Fresh and Marine Water.

Recommended Depths for Conducting Field Data Measurements

Water Depth Less than 5 ft (<1.5 m)	If the water depth is less than 5 ft (1.5 m), grab samples for water are taken at approximately 0.1 m (4 in.), and multi-probe measurements are taken at approximately 0.2 m (8 in.). This is because all sensors have to be submerged, so 0.1 m would not be deep enough. But taking a grab sample at 0.2 m is not always feasible, as it is difficult to submerge bottles to that depth, and in many cases the bottle will hit the stream bottom.
Water Depth Greater than 5 ft (>1.5 m)	If the water depth at the sampling point exceeds 5 ft (1.5 m) in depth, a vertical profile of dissolved oxygen, temperature, pH and specific conductance are made using the multi-parameter probe equipment. The depth of the sonde at the time of measurement is most accurately determined from the depth sensor on the multi-parameter sonde rather than depth labels on the cable.
Vertical Depth Profiles and Depth-Integrated Sample Collection	If depth integration sampling is being conducted, or if vertical profile measurements are requested, multi-probe measurements are made starting at a depth of 0.2 m, and are then conducted at 1.0, 2.0, 3.0, 4.0, and 5.0 m depths after that until 5.0 m depth is reached. Beginning at 5.0 m, measurements are made every 5.0 m through depth profile.

Field data for multi-parameter vertical depth profiles are recorded in final form on the SWAMP Field Data Sheets and submitted to the SWAMP data management staff. Go to http://www.waterboards.ca.gov/water_issues/programs/swamp/tools.shtml#qa for detailed information on data reporting.

Water Temperature (^{o}C)

Water temperature data are recorded for each site visit in final form on a Field Data Sheet and submitted to the SWAMP data management staff.

Temperature Sampling Procedures

Temperature is measured in-stream at the depth(s) specified above. Measuring temperature directly from the stream by immersing a multi-probe instrument or thermometer is preferred.

Hand Held Centigrade Thermometer

If an electronic meter is not available, the temperature is measured with a hand-held, centigrade thermometer (Rawson, 1982).

- In wadeable streams, stand so that a shadow is cast upon the site for temperature measurement.
- Hold the thermometer by its top and immerse it in the water. Position the thermometer so that the scale can be read.
- Allow the thermometer to stabilize for at least one minute, then without removing the thermometer from the water, read the temperature to the nearest 0.1^{o} C and record.
- Do not read temperature with the thermometer out of the water. Temperature readings made with modern digital instruments are accurate to within $\pm$ 0.1^{o} C.

Temperature Measurement from a Bucket

When temperature cannot be measured in-stream, it can be measured in a bucket-Nalgene or plastic container. Care must be taken to insure a measurement representative of in-stream conditions.

The following conditions must be met when measuring temperature from a bucket:

- The bucket must be large enough to allow full immersion of the probe or thermometer.
- The bucket must be brought to the same temperature as the water before it is filled.
- The probe must be placed in the bucket immediately, before the temperature changes.
- The bucket must be shaded from direct sunlight and strong breezes prior to and during temperature measurement.
- The probe is allowed to equilibrate for at least one minute before temperature is recorded.
- After these measurements are made, this water is discarded and another sample is drawn for water samples which are sent to the laboratory.

pH (standard units)

pH data is recorded for each SWAMP visit in final form on the Field Data Sheets and submitted to the SWAMP data management staff. Go to http://www.waterboards.ca.gov/water_issues/programs/swamp/tools.shtml#qa for detailed information on data reporting.

pH Sampling Equipment

The pH meter should be calibrated according to the recommended procedures for calibration and maintenance of SWAMP field equipment. Calibration directions are listed in the manufactures field equipment operations manual. The pH function is pre and post calibrated every 24 h of use for multi-parameter instruments.

pH Sampling Procedures

In-stream Method

Preferably, pH is measured directly in-stream at the depth(s) specified earlier in this document. Allow the pH probe to equilibrate for at least one minute before pH is recorded to the nearest 0.1 pH unit.

pH Measurement from a Bucket

When pH cannot be measured in-stream, it can be measured in a bucket-Nalgene or plastic container. The following precautions are outlined above; "Temperature Measurement from a Bucket".

Potential Problems

- < If the pH meter value does not stabilize in several minutes, out gassing of carbon dioxide or hydrogen sulfide, or the settling of charged clay particles may be occurring (Rawson, 1982).
- < If out gassing is suspected as the cause of meter drift, collect a fresh sample, immerse the pH probe and read pH at one minute.
- < If suspended clay particles are the suspected cause of meter drift, allow the sample to settle for 10 min, then read the pH in the upper layer of sample without agitating the sample.
- < With care, pH measurements can be accurately measured to the nearest 0.1 pH unit.

Dissolved Oxygen (mg/L)

Dissolved oxygen (D.O.) data is recorded for each SWAMP visit in final form on a Field Data Sheet and submitted to the SWAMP data management staff.
See http://www.waterboards.ca.gov/water_issues/programs/swamp/tools.shtml#qa for detailed information on data reporting.

Dissolved Oxygen Sampling Equipment

The dissolved oxygen meter should be calibrated according to the recommended procedures for calibration and maintenance of SWAMP field equipment. Calibration directions are listed in the manufactures field equipment operations manual.

Multi-probe Instrument

Pre and post calibrate the D.O. sensor every 24 h and for elevations greater than 500 ft on the multi-probe instrument. Preferably, D.O. is measured directly in-stream at the depth(s) specified in the Field Measurements section above. The D.O. probe must equilibrate for at least 90 s before D.O. is recorded to the nearest 0.1 % saturation or mg/L. Care must be taken at profile stations to insure that the reading is stable for each depth. Since dissolved oxygen takes the longest to stabilize, record this parameter after temperature, conductivity and pH. If the D.O. probe has an operable, automatic stirrer attached, the D.O. probe does not have to be manually stirred. However, if the probe is not equipped with an automatic stirrer, manual stirring must be provided by raising and lowering the probe at a rate of 1 ft/s (0.3m/s) without agitating the water surface. If the stream velocity at the sampling point exceeds 1 ft/s, the probe membrane can be pointed upstream into the flow and manual stirring can be avoided (Rawson, 1982).

D.O. Measurement from a Bucket

When D.O. cannot be measured in-stream, it can be measured in a bucket-Nalgene or plastic container, following precautions outlined in the Temperature Measurement from a Bucket listed above. During equilibration and reading, water should be moved past the membrane surface at a velocity of 1 ft/s (0.3 m/sec), either by automatic stirrer or manual stirring. If stirred manually in a bucket, the water surface is not agitated (Rawson, 1982).

24-Hour Average D.O. Continuous Monitoring (if requested in special study)

Unattended 24-Hour D.O. Data Collection

Why Collect 24-Hour Data

Dissolved oxygen sampling for standards compliance is targeted to water bodies where low instantaneous D.O. levels indicate partial or nonsupport of designated aquatic life uses. Intensive monitoring is conducted with automated equipment that is preset to record and store field measurements hourly over one 24-h period. Four or more dissolved oxygen measurements may also be made manually at 4-6-h intervals over one 24-h period, as long as one is made near sunrise (0500-0900 h) to approximate the daily minimum. However, data collected with automated equipment is preferred.

When to Take Measurements

All 24-h D.O. monitoring events must be spaced over an index period representing warm-weather seasons of the year (approx March 15-October 15), with between one-half to two-thirds of the measurements occurring during the critical period (July 1-September 30). The ***critical period*** of the year is when minimum stream flows, maximum temperatures, and minimum dissolved oxygen concentrations typically occur in area streams. **A flow measurement must be taken at the time of deployment.** In a perennial stream, a 24-h data for standards compliance can not be used if the flow is less than the 7Q2. In perennial streams, the D.O. criterion to do not

apply for flows under the 7Q2. A period of about one month must separate each 24-h sampling event. Additional samples may be collected outside the index period to further characterize a water body, but that information is generally not used for assessing standards compliance.

Frequency of Measurements

The measurement interval should be no more than once per 15 min and no less than once per hour.

Where to Take Measurements

For purposes of determining standards compliance with the 24-h average criteria, samples collected near the surface will be considered representative of the mixed surface layer. In deep streams, reservoirs, and tidally influenced water bodies, automated equipment is positioned between 1 foot (from the surface) to one-half the depth of the mixed surface layer. At least 10 24-h monitoring events (using the 24-h criteria and/or absolute minimum criteria) at each site within a 5-year period are recommended to provide adequate data for assessment.

When to Collect Other Routine Samples, if doing 24-hour D.O. measurements

Other routine field measurements and water samples should be collect at either the time of deployment, at the reference check, or when the multi-probe recording 24-h data is retrieved. When ever possible, flow must be measured at the 24-h site.

Priority for Scheduling 24-Hour Sampling Events

- 303d listed waterbodies
- Waterbodies with Concerns for DO problems (too few samples available for full use assessment).
- Occurrence of low D.O. concentrations observed during the day
- Waterbodies with trends indicating declining D.O. concentrations
- Waterbodies which would contribute to an Eco-region data set

Data Reporting for 24-hour D.O. measurements

Dissolved oxygen values recorded over the 24-h period are summed and divided by the number of measurements to determine the average concentration, which is compared to the 24-h criterion. The lowest D.O. value from each 24-h set is compared to the minimum criterion. There will be occasions when a complete 24-h data set won't be possible. For example, if there are 18 measurements instead of 24, a time weighted diurnal average needs to be calculated. This can be easily done using GW Basic.

Support of assigned aquatic life use is based on 24-h D.O. average and minimum criteria for each monitoring event. Report the 24-h average D.O. value, number of measurements over a 24-h period, and the minimum, and maximum values. Report data as a time composite sample with a beginning and ending date and time, covering the 24-h period measured.

Specific Conductance (µS/cm)

Specific conductance should be recorded for each SWAMP visit in final form on a Field Data Sheet and submitted to the SWAMP data management staff.
See http://www.waterboards.ca.gov/water_issues/programs/swamp/tools.shtml#qa for detailed information on data reporting.

Specific Conductance Sampling Equipment

The conductivity meter should be calibrated according to the recommended procedures for calibration and maintenance of SWAMP field equipment. Calibration directions are listed in the manufactures field equipment operations manual.

Specific Conductance Sampling Procedure

Preferably, conductivity is measured directly in-stream at the depth(s) specified earlier in this document. Allow the conductivity probe to equilibrate for at least one minute before specific conductance is recorded to three significant figures (if the value exceeds 100). The primary physical problem in using a specific conductance meter is entrapment of air in the conductivity probe chambers. The presence of air in the probe is indicated by unstable specific conductance values fluctuating up to ±/-100 µS/cm. The entrainment of air can be minimized by slowly, carefully placing the probe into the water; and when the probe is completely submerged, quickly move it through the water to release any air bubbles.

If specific conductance cannot be measured in-stream, it should be measured in the container it can be measured in a bucket-Nalgene or plastic container. The following precautions are outlined above; "Temperature Measurement from a Bucket".

Salinity (parts per thousand--ppt, or ‰)

The value for salinity is computed from chloride concentration or specific conductance. The calculation assumes a nearly constant ratio for major ions in an estuary when seawater is diluted by river water. This assumption does not hold for cases where salinity is less than about three parts per thousand. Salinity determinations at such low values are only approximate. In estuarine waters, salinity is a relevant and meaningful parameter. Often the salinity may be low, approaching that of freshwater. Nevertheless, this is useful information. Determine if a station is estuarine from historical records (i.e., experiences cases where salinity is >2.0 ppt) and always report salinity at this station, regardless of the salinity during periods of high flow.

Salinity is measured directly in-stream at the depth(s) specified earlier in this document. Salinity data should be recorded for each SWAMP visit in final form on a Field Data Sheet and submitted to the SWAMP data management staff. See http://www.waterboards.ca.gov/water_issues/programs/swamp/tools.shtml#qa for detailed information on data reporting.

Values between 2.0 ppt and 1.0 ppt should be reported as <2.0 ppt rather than the actual value and values <1.0 ppt should be reported as <1.0 ppt. The field instruments compute salinity from specific conductance and temperature, and display the value in parts per thousand. Report salinity values above 2.0 ppt to the nearest 0.1 ppt.

Secchi Disc Transparency (meters)--if requested in special study

Secchi disk transparency should be recorded for each SWAMP visit in final form on a Field Data Sheet and submitted to the SWAMP data management staff. See http://www.waterboards.ca.gov/water_issues/programs/swamp/tools.shtml#qa for detailed information on data reporting.

Secchi Disk Sampling Equipment

< Secchi disk, 20 cm in diameter

< Measuring tape

Secchi Disk Transparency Sampling Procedures

Preferably, Secchi disk transparency is measured directly in-stream wherever conditions allow. The Secchi disk should be clean, weighted and suspended with chain, wire, or Dacron line (the line used to suspend the Secchi disk should not be nylon or cotton; stretching may cause erroneous readings). Another option is to attach the Secchi disk to a metal rod calibrated in metric units.

Average Turbidity

The Secchi disk should be lowered vertically in a location shielded from direct sunlight. Glare from the water's surface will affect the accuracy of the measurement. Don't wear sunglasses.

Slowly lower the disk until it disappears from view. The person viewing the disk should maintain an eye level of less than two meters above the water's surface. Note the depth at which the disk disappears from view.

Slowly raise the disk until it becomes visible. Note the depth at which the disk reappears.

Compute the mathematical average of the two depths noted and record the average value to two significant figures on the field data sheet. The recorded average value is the Secchi disk transparency.

High Turbidity (Muddy Water)

In streams with very high turbidity, high velocity, and/or poor access, it may be necessary to measure Secchi disk transparency in a bucket. Fill the bucket from the centroid of flow being careful not to disturb the substrate.

Follow steps above for measuring the Secchi disk depth within 30 s after raising the filled bucket from the water's surface. Or, re-suspend the solids by stirring, then quickly make the measurement.

Record Secchi disk transparency to two significant figures.

Low Turbidity (Clear Water)

Some bodies of water will be so clear and shallow that it will not be possible to lower the Secchi disk until it disappears from view.

Measure and record the depth at the deepest point accessible. Report Secchi disk transparency as greater than the deepest depth measured.

Example (Low Turbidity): South Fork Rocky Creek is a small (<1 ft^3/s) clear stream. The stream in the vicinity of the sampling site was less than 1 m deep and the bottom was clearly visible everywhere. However, a pool was located in the stream next to a bridge. The maximum depth of the pool was 2.6 m at which depth the Secchi disk was still visible. Therefore, Secchi disk transparency for South Fork Rocky Creek was recorded as > 2.6 m.

Importance of Secchi Disk Data

Eutrophication, the natural aging process in reservoirs and lakes is accelerated by human activities which add nutrients to lakes, reservoirs, and the surrounding watersheds. Section 314 of the Clean Water Act (CWA) of 1987 requires all states to classify lakes and reservoirs according to trophic state. Although chlorophyll a is the most direct measure of algal biomass, other indices and programs utilize Secchi disk depth as the primary factor.

Turbidity Measurement with Turbidity Meter

Nephelometric Turbidity (turbidity standard unit is called Nephelometric Turbidity Units (NTU)) can be determined by measuring the amount of scatter when light is passed through a sample using a turbidity meter. The LaMotte 2020 Turbidity meter is a suitable instrument for example. There are also turbid-ometers attached to multi-probe instruments like YSI or Hydro-Lab.

Turbidity meters should be calibrated using a standard close to the expected sample value. Calibration standards should be used that are relative to the suspended sediment particles in the sampleable water column. Typical calibration standard values are 1, 10, 100, and 1000 NTU's.

For instructions on how to operate the instruments refer to the manufacturer's manual. Turbidity measurements can be executed together with water sampling. The turbidity sample has to be representative for the sampled water mass. Make sure that no gas bubbles are trapped in the vial for the reading and that the outside of the vial is wiped completely clean (i.e., meaning free of moisture, lint and fingerprints). Take several measurements to assure an accurate reading. Do not record values that vary greatly. If variations are small, record an average. If settling particles are present, record a reading before and one after settling. The meter might have to be recalibrated with a different standard, if the sample water readings are outside of the calibration standard limits.

Flow

Sampling crews should be notified on reconnaissance forms if it is known that there is an operational United States Geological Survey (USGS) gage located at or nearby a sampling site. If there is a USGS gage nearby, a gage height in feet is recorded and later converted to an instantaneous flow value and recorded on the field data sheet. The gage height is always to be reported to the USGS for conversion to flow. If a USGS gage is not available, a flow measurement should be taken, if requested. See Instantaneous Flow Measurement information starting on page 13 in this document. Centroid velocity measurements may also be taken as a minimum acceptable rough characterization of the stream flow as requested, although this measurement is not to be recorded as a flow, since it is only a velocity measurement
Flow information for over 200 USGS sites is available on the Internet. The address is http://water.usgs.gov/index.html. This is useful information in determining flow conditions prior to sampling. This information may be included in general observations.

Flow Measurement Method (Reporting)

The method used to measure flow is noted by reporting which instrument or gage is used. Examples are, Flow Gage Station (USGS/IBWC), Electric Marsh-McBirney flo mate 4000, Mechanical (ex. Pigmy meter), Weir/Flume, Other (orange peel, etc.) Flow data transformers are used to enter flow data into the SWAMP database. Please contact the SWAMP data management team to obtain the flow data transformer.

Flow (ft^3/s)

If requested, flow data should be recorded for each monitoring visit to non-tidal, flowing streams. Flow data should be recorded in final form on a Field Data Sheet and submitted to the SWAMP data management staff. See http://www.waterboards.ca.gov/water_issues/programs/swamp/tools.shtml#qa for detailed information on data reporting. The following are two exceptions to the flow reporting requirement:

No Flow/ Pools — If there is no flow at a stream site and accessible, isolated pools remain in the stream bed, collect and report the required field data and laboratory samples from the pools and report instantaneous flow. Under these conditions, flow (ft^3/s) should be reported as zero. Pools may represent natural low-flow conditions in some streams and the chemistry of these pools will reveal natural background conditions.

Dry — If the stream bed holds no water, the sampling visit is finished. Report that the stream was "dry" in the observations. No value is reported for flow since there is no water.

Flow Measurement

If a flow measurement is required at a site, measure and record flow after recording visual observations. The intent of measuring flow first is to delay collection of chemical and biological water samples with limited holding times. Care must be taken not to collect water samples in the area disturbed during flow measurement. There are several acceptable flow measurement methods that can be used.

U.S. Geological Survey (USGS) Gaging Station

Some SWAMP Stations are sampled at sites where the USGS maintains flow gaging equipment. On any type of sampling visit to a site that has a USGS flow gage, observe and record the gage height to the nearest hundredth of a foot in the field logbook. Upon return to the office, contact the USGS office responsible for maintaining the gage. USGS personnel can provide the flow value in cubic feet per second (ft^3/s) that corresponds to the gage height. Although SWAMP personnel may have a rating curve available to them, shifts associated with changes in the stream bed may occur over time. Always call the USGS to determine the shift. At some sites the shift changes frequently. At others, the relation between stream flow and gage height is almost unchanging. If a gage is no longer maintained by USGS, cross out the recorded gage height and be prepared to measure flow by another method on the return visit to that site.

Several factors may influence the accuracy of the USGS rating curves that are used to convert gage height to flow. If there is any doubt about the accuracy of a USGS gage height reading or flow rating curve, sampling personnel should measure the flow if possible.

Gage height may be indicated at a USGS gage by one of three methods:

Staff Gage

Staff gages are enameled steel plates (with the appearance of large measuring tapes) bolted to some stable structure. For example, staff gages may be bolted to concrete bridge abutments, pillars, or docks. The staff gage face is white with black lettering and gradations. The gradations shown are feet, tenths of a foot, and 0.02 of a foot. The point at which the water level crosses the staff gage should be recorded to the nearest hundredth of a foot.

Wire Weight Gage

Wire weight gages are locked, metal boxes with approximate dimensions of 15 in. long x 12 in. tall x 12 in. deep. Wire weight gages are usually affixed to bridge rails near mid-stream. They must be unlocked with a USGS key. The wire weight gages house a weight attached by wire cable to a graduated reel (gradations are tenths and hundredths of feet) with a counter at one end.

When the reel is released the weight can be gradually lowered until the bottom of the weight contacts the water surface. At the point of contact, the weight causes the water surface to ripple slightly. Maintaining the weight in that position, record the counter value to the nearest whole number and the point indicated by the stylus on the graduated reel to the nearest hundredth of a foot. Determine if the gage is the movable type that can be moved to multiple

locations on the bridge. This type is common on braided streams. A correction value is stamped on the bridge near each point that the gage can be attached. Record the corrected value as the gage height in feet.

Bubble Gage

Bubble gages are locked in metal sheds that are approximately 4 ft wide x 4 ft deep x 6.5 ft tall. The gage houses are most frequently located on the shore near a bridge but sometimes are attached to bridge pillars near mid-stream or established on the stream bank far from any bridge. The gage house must be unlocked with a USGS key. Bubble gages in gage houses usually indicate the gage height in two or three locations. A counter attached to the manometer system indicates gage height in feet. Some gage houses have stilling wells that can be entered. Often there is a staff gage on the inside wall.

Most bubble gages are also equipped with digital recorders. Digital recorders consist of two white, coded discs, approximately 4 in. in diameter with a punch tape overlapping a portion of each disc. The discs are marked with 100 gradations. As the front of the digital recorder is viewed, the stylus at the disc on the left indicates height in feet. The stylus at the disc on the right indicates gage height in hundredths of feet. The gage height from both discs should be added and the number recorded in the field logbook as gage height to the nearest hundredth of a foot.

Many USGS metal sheds also contain a surface level recorder. This devise can be opened to determine how stable stream flow has been prior to the sampling event. Record observations concerning the flow hydrograph.

Instantaneous Flow Measurement

Water quality monitoring visits to sites where there are no nearby USGS flow gauges will require water quality monitoring personnel to measure flow, when requested by Regional Water Quality Control Boards (Regional Boards).

Flow Measurement Equipment

Flow meter

One of the following or an equivalent:

- Marsh-McBirney Electronic meter
- Montedoro-Whitney Electronic meter
- Price Pigmy meter (with timer and beeper)
- Price meter, Type AA (with Columbus weight)

Additional Equipment

- Top-setting wading rod (preferably measured in tenths of feet)(see Figure 1).
- Tape measure (with gradations every tenth of a foot or every centimeter).

Flow Measurement Procedure (USGS, 1969)

Select a stream reach with the following characteristics:

< Straight reach with laminar flow (threads of velocity parallel to each other) and bank to bank. These conditions are typically found immediately upstream of riffle areas or places where the stream channel is constricted.

< The site should have an even streambed free of large rocks, weeds, and protruding obstructions that create turbulence. The site should not have dead water areas near the banks, and a minimum amount of turbulence or back eddies.

Flat Streambed Profile (cross section)

Stretch the measuring tape across the stream at right angles to the direction of flow. When using an electronic flow meter, the tape does not have to be exactly perpendicular to the bank (direction of flow). When using a propeller or pigmy type meter, however, corrections for deviation from perpendicular must be made.

If necessary and possible, modify the measuring cross section to provide acceptable conditions by building dikes to cut off dead water and shallow flows, remove rocks, weeds, and debris in the reach of stream one or two meters upstream from the measurement cross section. After modifying a streambed, allow the flow to stabilize before starting the flow measurement.

Record the following information on the flow measurement form (see example Flow Measurement Forms at end of this document):

< Station Location and Station ID

< Date

< Time measurement is initiated and ended

< Name of person(s) measuring flow

< Note if measurements are in feet or meters

< Total stream width and width of each measurement section

< For each cross section, record the mid-point, section depth and flow velocity

Measuring the Stream Width

Measure and record the stream width between the points where the tape is stretched (waters edge to waters edge).

Determining the Number of Flow Cross Sections

Determine the spacing and location of flow measurement sections. Some judgment is required depending on the shape of the stream bed. Measurements must be representative of the velocity within the cross-section. If the stream banks are straight and the depth is nearly constant and the bottom is free of large obstructions, fewer measurements are needed, because the flow is homogeneous over a large section. Flow measurement sections do not have to be equal width. However, they should be unless an obstacle or other obstruction prevents an accurate velocity measurement at that point. ***No flow measurement section should have greater than 10% of the total flow.***

If the *stream width is less than 5 ft*, use flow sections with a width of 0.5 ft (See example 1 on page 23 of this document). If the *stream width is greater than 5 ft*, the minimum number of flow measurements is 10. The preferred number of flow measurement cross sections is 20-30 (See Example 2 on page 24 on this document). The total stream width is 26 ft with 20 measurements, section widths will be 1.3 ft (26/20 = 1.3).

Determining the Mid-Point of the Cross Section

To find the mid-point of a cross section, divide the cross section width in half. Using Example 2 (see forms at end of document);

- The total stream width is 26 ft with 20 cross sections and each cross section width is equal to 1.3 ft.
- Divide 1.3 ft in half and the mid-point of the first section is 0.65 ft. In this example the tape at waters edge is set at zero (0) ft.
- By adding 0.65 to zero the mid-point of the first section is 0.65 ft.
- Each subsequent mid-point is found by adding the section width (1.3 ft) to the previous mid-point. For example; MIDPOINT #1 is 0.65 + 0.0 = 0.65; MIDPOINT #2 is 0.65 + 1.3= 1.95 ft; MIDPOINT #3 is 1.95 + 1.3 = 3.25 ft and ....MIDPOINT # 20 is 24.05 +1.3.
- Place the top setting wading rod at 0.65 ft for the first measurement.
- Using a top setting wading rod, measure the depth at the mid-point of the first flow measurement section and record to the nearest 0.01 ft.

Figure 1. Top-Setting Wading Rod (Marsh-McBirney)

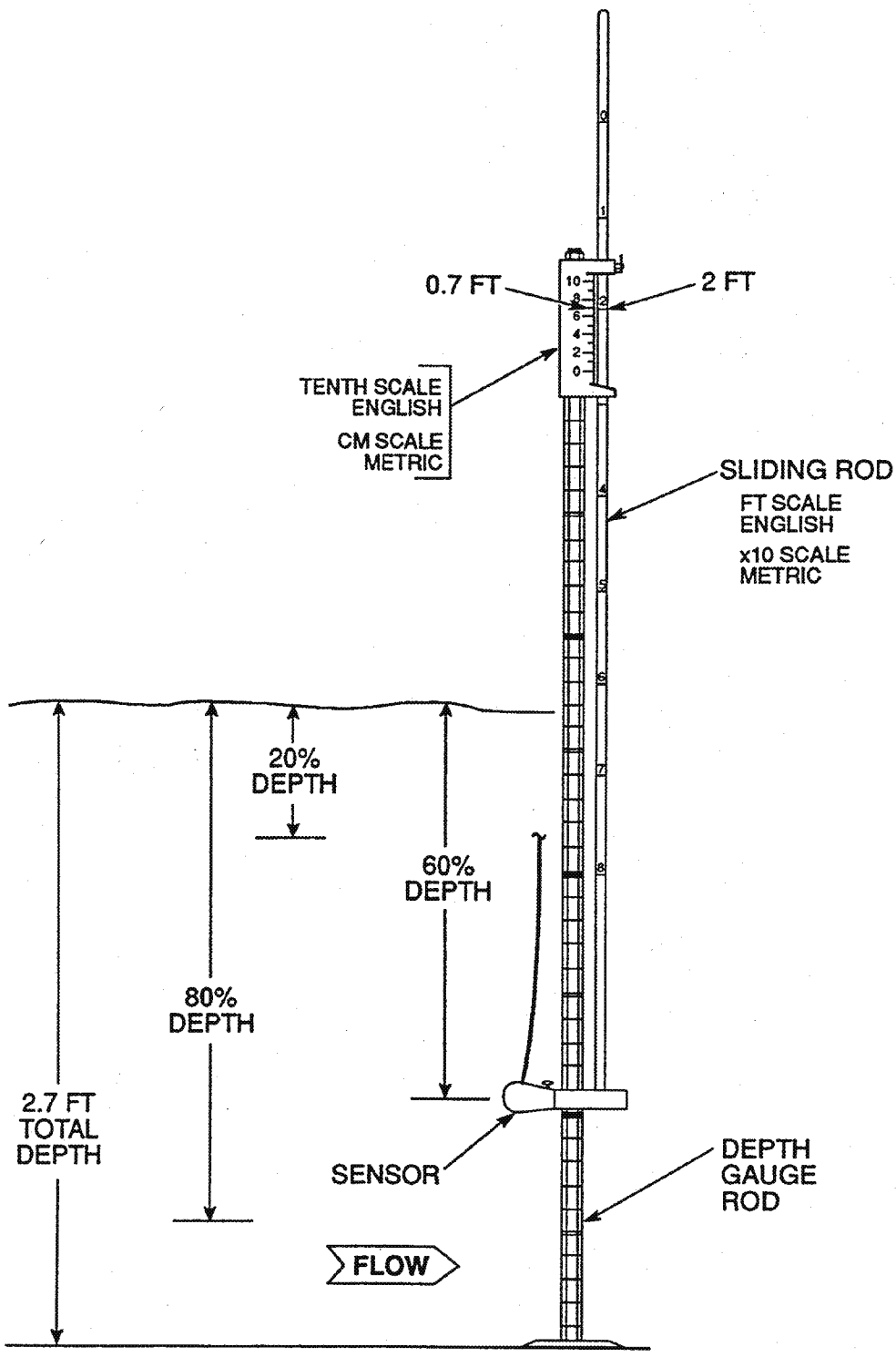

Adjusting the Sensor Depth at a Cross Section

Adjust the position of the sensor to the correct depth at each mid-point. The purpose of the top setting wading rod is to allow the user to easily set the sensor at 20%, 60%, and 80% of the total depth. The total depth can be measured with the *depth gage rod*. Each single mark represents 0.10 foot, each double mark represents 0.50 foot, and each triple mark represents 1.00 foot (see Figure 2).

For Depths < 2.5 Ft	If the depth is less than 2.5 ft, only one measurement is required at each measurement section. To set the sensor at 60% of the depth, line up the foot scale on the *sliding rod* with the *tenth scale*, located on top of the depth gage rod. If, for example, the total depth is 2.7 ft (as shown on Figure 2), then line up the 2 on the foot scale with the 7 on the tenth scale (Marsh-McBirney 1990).
For Depths > 2.5 Ft	If the depth is greater than 2.5 ft, measurements should be taken at 20% and 80% of the total depth.

Measuring Velocity (this has typically been measured at 6/10 of the total depth, for velocity-only measurements)

- Position the meter at the correct depth and place at the mid-point of the flow measurement section. Measure and record the velocity and depth. The wading rod is kept vertical and the flow sensor kept perpendicular to the tape rather than perpendicular to the flow while measuring velocity with an electronic flow meter. When using a propeller or pigmy-type meter, however, the instrument should be perpendicular to the flow.
- Permit the meter to adjust to the current for a few seconds. Measure the velocity for a minimum of 20 s with the Marsh-McBirney and Montedoro-Whitney meters. Measure velocity for a minimum of 40 s (preferably 2 min with the Price and pigmy meters).

- When measuring the flow by wading, stand in the position that least affects the velocity of the water passing the current meter. The person wading stands a minimum of 1.5 ft downstream and off to the side of the flow sensor.
- A flow sensor, equipped with cable and weight may be used to measure flows where the water is too deep to wade. Follow the procedure involving meters attached to wading rods.
- Report flow values less than 10 ft^2/s to two significant figures. Report flow values greater than 10 ft^3/s to the nearest whole number, but no more than three significant figures.
- In cases where the flow is low and falling over an obstruction, it may be possible to measure the flow by timing how long it takes to fill a bucket of known volume.

Avoid measuring flow in areas with back eddies. The first choice would be to select a site with no back eddy development. However, this can not be avoided in certain situations. Measure the

negative flows in the areas with back eddies. These negative values will be included in the final flow calculation.

Calculating Flow

To calculate flow, multiply the width x depth (ft^2) to derive the area of the flow measurement section. The area of the section is then multiplied by the velocity (ft/s) to calculate the flow in cubic feet per second (cfs or ft^3/sec) for that flow measurement section. When flow is calculated for all of the measurement sections, they are added together for the total stream flow (see Figure 2). Flow data transformers are also provided by the SWAMP data management team. The transformer provides the calculations needed to obtain a final flow value in cubic feet per second.

Q=Total Flow (or discharge), W=Width, D=Depth, V=Velocity.

$$Q = (W_1 * D_1 * V_1) + (W_2 * D_2 * V_2) + \ldots\ldots (W_n * D_n * V_n)$$

What to Do with Negative Values

Do not treat cross sections with negative flow values as zero. Negative values obtained from areas with back eddies should be subtracted during the summation of the flow for a site.

Flow Estimate (ft^3/s)

Flow estimate data may be recorded for a non-tidally influenced stream when it is not possible to measure flows by one of the methods described above. Flow estimates are subjective measures based on field personnel's experience and ability to estimate distances, depths, and velocities. If flow can not be measured at a routine non-tidal station, a new site should be selected where flow can be measured.

Flow Estimate Procedure

- Observe the stream and choose a reach of the stream where it is possible to estimate the stream cross section and velocity.
- Estimate stream width (ft) at that reach and record.
- Estimate average stream depth (ft) at that reach and record. Estimate stream velocity (ft/s) at that reach and record. A good way to do this is to time the travel of a piece of floating debris. If doing this method from a bridge, measure the width of the bridge. Have one person drop a floating object (something that can be distinguished from other floating material) at the upstream side of the bridge and say start. The person on the downstream side of the bridge will stop the clock when the floating object reaches the downstream side of the bridge. Divide the bridge width by the number of seconds to calculate the velocity. The velocity can be measured at multiple locations along the bridge. These velocities are averaged. If this is done alone, watch for road traffic.
- Multiply stream width (ft) time's average stream depth (ft) to determine the cross sectional area (in ft^2) which when multiplied by the stream velocity (in ft/s) and a correction constant, gives an estimated flow (ft^3/s).

Example: A stream sampler conducted a sampling visit to a stream while the flow meter was being repaired. The sampler looked at the creek downstream from the bridge and saw a good place to estimate flow. The stream width was around 15 ft. It appeared the average depth on this reach was about 0.75 ft. The sampler timed a piece of floating debris as it moved a distance of 10 ft in 25 s downstream over the reach. An estimated flow with a smooth bottom was calculated using the following formula.

Width x Depth x Velocity x A (correction factor)= estimated flow
15 ft (width) x 0.75 ft (depth) x 2.5 ft/s (velocity) x A =25 ft^3/s (cfs)

A is a correction constant: 0.8 for rough bottom and 0.9 for smooth bottom

Estimated flow should be reported to one or two significant figures.

Experienced field personnel are able to estimate flow to within 20% of actual flow for total flows less than 50 ft^3/s. The best way to develop this skill is to practice estimating flow before making measurements at all monitoring visits to non-tidally influenced flowing streams and then compare estimated flows with those obtained from USGS gages or from instantaneous flow measurements

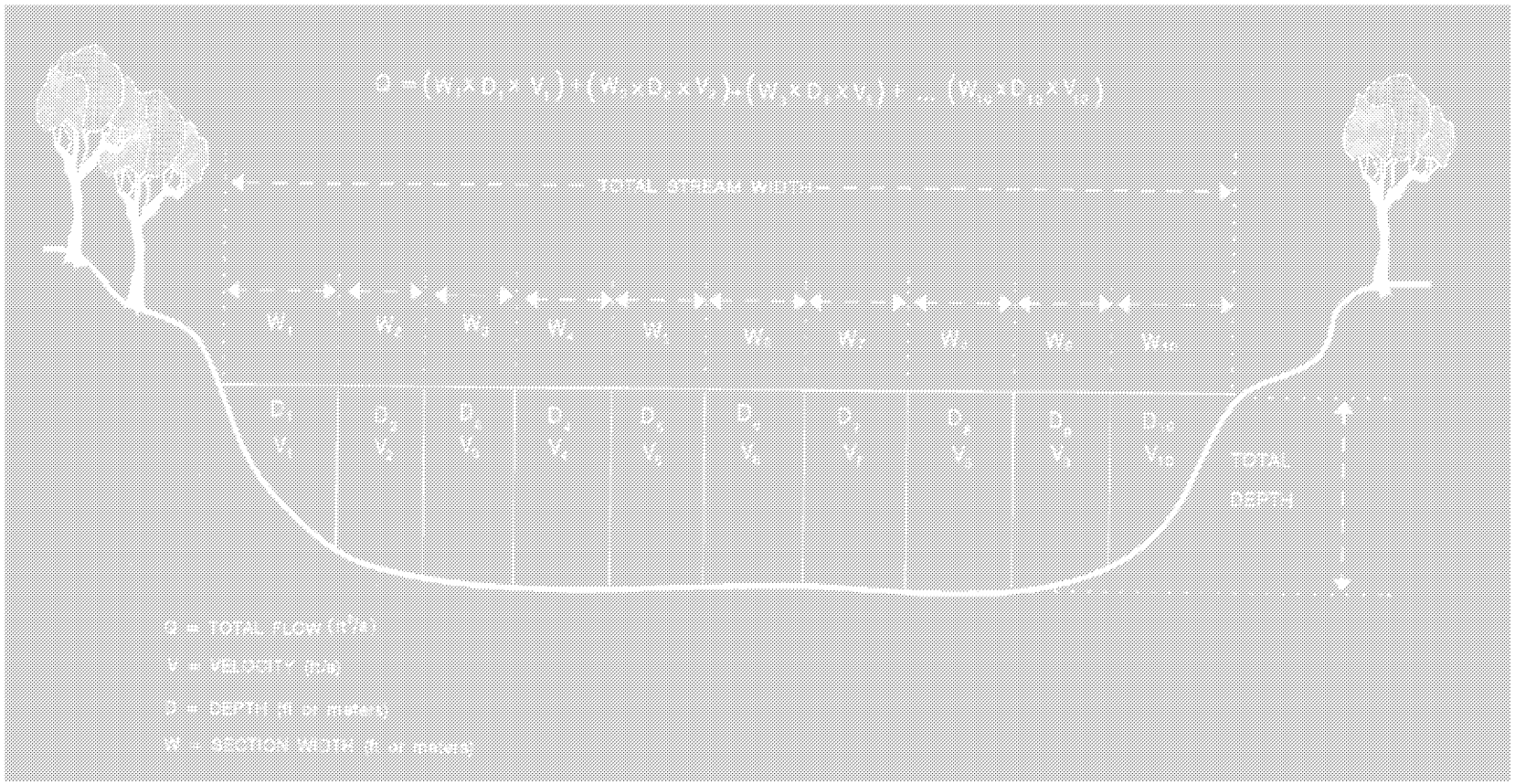

Figure 2. Stream Flow (Discharge) Measurement

Example 1.
Stream Flow (Discharge) Measurement
Small Stream < 5 Ft Wide and #2.5 Ft Deep

Stream:____**OAK CREEK**_____Date:__**5/29/91**_____
Station Description:_____**at US Hwy 90A**_____
Time Begin:__**1545**_____Time End:__**1630**_____Meter Type:__**Marsh-McBirney**_____
Observers:_____**BK/MK**_____Stream Width*:____**5 ft**_____ Section Width:____**0.5 ft**_____
Observations:_____

Section Midpoint (ft)	Section Depth (ft)	Observational Depth** Ft	Velocity		Area W x D (ft^2)	Discharge (Q) V x A (ft^3/s)
			At Point (ft/s)	Average (ft/s)		
0.25	0.55			0.05		0.01375
0.75	0.80			0.11		0.044
1.25	0.85			0.27		0.42635
1.75	0.90			0.49		0.2205
2.25	1.10			0.58		0.275
2.75	1.50			0.72		0.540
3.25	1.20			0.76		0.456
3.75	0.90			0.76		0.342
4.25	0.75			0.44		0.165
4.75	0.30			0.00		0.00

m^3/s x 35.3 =ft^3/s

Total Discharge (3Q) (ft^3/s) **2.4826**

Example 2: Stream Discharge Measurement Example (Larger Stream > 5 Ft and #2.5 Ft Deep)

Stream:____**RED RIVER**_____Date:__**5/28/91**_____

Station Description:_____**Post Oak Creek 40 m Below Sherman WWTP Outfall**_____

Time Begin:__**1542**_____Time End:__**1601**_____Meter Type:_**Marsh-McBirney**_____

Observers:_____**CM, EW, DO**_____Stream Width*:____**26 ft**___ Section Width:___**1.3 ft**_____

Observations:_____

Section Midpoint (ft)	Section Depth (ft)	Observational Depth** ft	Velocity		Area W x D (ft^2)	Discharge (Q) V x A (ft^3/s)
			At Point (ft/s)	Average (ft/s)		
0.65	0.55			2.03	0.715	1.451
1.95	0.40			2.04	0.520	1.061
3.25	0.42			2.02	0.546	1.103
4.55	0.38			1.77	0.494	0.874
5.25	0.40			1.75	0.520	0.910
7.15	0.42			1.93	0.546	1.054
8.45	0.40			1.99	0.52	1.035
9.75	0.37			1.92	0.481	0.924
11.05	0.37			1.56	0.481	0.750
12.35	0.43			1.32	0.559	0.738
13.65	0.40			1.36	0.520	0.707
14.95	0.42			1.33	0.546	0.726
16.25	0.40			1.35	0.520	0.702
17.55	0.45			1.64	0.585	0.959
18.85	0.48			1.70	0.624	1.061
20.15	0.48			2.00	0.624	1.248
21.45	0.50			1.95	0.650	1.268
22.75	0.40			2.18	0.520	1.134
24.05	0.48			1.71	0.624	1.067
25.35	0.50			0.60	0.650	0.390
				Total Discharge (3Q) (ft^3/s)		19.162

m^3/s x 35.3 =ft^3/s

Example 3: Stream Flow (Discharge) Measurement (Larger Stream > 5 Ft and >2.5 Ft Deep)

Stream:____ARROYO COLORADO_____Date:__**6/16/98**_____
Station Description:_____Downstream of Harlingen WWTP_____
Time Begin:__**1400**_____Time End:__**1445**_____Meter Type:___**Marsh-McBirney**_____
Observers:_____**JD, CK**_____Stream Width*:___**47.5 ft**___ Section Width:___**2.375 ft**_____
Observations: *Note that the starting point is at 4.7 ft on the measuring tape and not zero.

Section Midpoint (ft)	Section Depth (ft)	Observational Depth** ft	Velocity At Point (ft/sec)	Velocity Average (ft/sec)	Area W x D (ft^2)	Discharge (Q) V x A (ft^3/s)
4.70	0.73			0.65	1.73	1.127
7.08	1.10			1.08	2.61	2.822
9.45	1.85			0.90	4.39	3.954
11.83	2.20			1.05	5.23	5.486
14.20	2.20			1.44	5.23	7.531
16.58	2.45			1.09	5.82	6.342
18.95	2.55	0.20 0.80	1.75 1.76	1.76	6.06	10.659
21.33	2.60	0.20 0.80	1.79 1.32	1.56	6.18	9.633
23.70	2.70	0.20 0.80	1.63 1.26	1.45	6.41	9.298
26.10	3.05	0.20 0.80	1.68 1.15	1.42	7.24	10.286
28.48	3.10	0.20 0.80	1.23 0.69	0.96	7.36	7.068
30.85	2.90	0.20 0.80	1.22 0.89	1.06	6.89	7.301
33.23	2.84	0.20 0.80	0.60 0.37	0.49	6.75	3.305
35.60	2.65	0.20 0.80	0.80 0.21	0.51	6.29	3.210
37.98	2.65	0.20 0.80	0.85 0.96	0.91	6.29	5.727
40.35	2.20			0.28	5.23	1.464
42.73	2.30			0.16	5.46	0.874
45.10	2.05			0.51	4.87	2.483
47.48	1.10			0.49	2.61	1.280
49.86	0.65			0.62	1.54	0.957

m^3/s x 35.3 =ft^3/s

Total Discharge (3Q) (ft^3/s)

Stream Flow (Discharge) Measurement Form

Stream:____Date:____________

Station Description:____

Time Begin:________ Time End:_________ Meter Type:________________

Observers:______________ Stream Width*:__________ Section Width:________

Observations:____

Section Midpoint (ft) (m)	Section Depth (ft) (m) (cm)	Observational Depth** ft-m-cm	Velocity		Area W x D (ft^2) (m^2)	Flow (Q) V x A (m^3/s) (ft^3/s)
			At Point (ft/s) (m/s)	Average (ft/s)(m/s)		

$m^3/s \times 35.3 = ft^3/s$

Total Flow (Discharge) (3Q) (ft^3/s)	

Make a minimum of 10 measurements when the total width is > 5.0 ft, 20 measurements preferred.

If the depth is less than 2.5 ft, only one measurement is required at each measurement section. To set the sensor at 60% of the depth, line up the foot scale on the *sliding rod* with the *tenth scale*, located on top of the depth gage rod. If, for example, the total depth is 2.7 ft (as shown on Figure 2), then line up the 2 on the foot scale with the 7 on the tenth scale (Marsh-McBirney 1990). If the depth is greater than 2.5 ft, measurements should be taken at 20% and 80% of the total depth.

Summary of Significant Figures for Reporting Field Parameters

Parameter	Field Data Reporting Requirements
Water Temperature (°C)	Report temperature to the nearest tenth of a degree. Round insignificant figures 0 through 4 down and 5 thru 9 up.
pH (s.u.)	Report pH to the nearest tenth of a pH standard unit.
D.O. mg/L **D.O.** (% saturation)	Report dissolved oxygen to the nearest tenth of a mg/L. Report % saturation to the nearest tenth of a percent
Specific Conductance (micro siemens/cm)	Report specific conductance to only three significant figures if the value exceeds 100. Do not report ORP which is displayed by some multi-probes.
Salinity (ppt)	Report salinity values above 2.0 ppt to the nearest tenth of a part per thousand. In estuarine waters report the actual values displayed by the multi-probe above 2.0 ppt and values less than 2.0 as <2.0 or <1.0 only. Determine if a station is estuarine (i.e., experiences cases where salinity is >2.0 ppt) and always report salinity at this station, regardless of the salinity during periods of high flow.
Secchi Disk (meters)	Report Secchi depth transparency in meters to two significant figures.
Flow (ft^3/s)	Report instantaneous flow values less than 10 ft^3/s to two significant figures. Report flow values greater than 10 ft^3/s to the nearest whole number, but no more than three significant figures. When there is no flow (pools), report as 0.0. When there is no water, don't report a value, but report as "dry" in the observations.

BEAUFORT SCALE: Specifications and equivalent speeds for use at sea

FORCE	EQUIVALEN SPEED 10 m above ground		DESCRIPTION	SPECIFICATIONS FOR USE AT SEA
	Miles/hour	knots		
0	0-1	0-1	Calm	Sea like a mirror
1	1-3	1-3	Light air	Ripples with the appearance of scales are formed, but without foam crests.
2	4-7	4-6	Light Breeze	Small wavelets, still short, but more pronounced. Crests have a glassy appearance and do not break.
3	8-12	7-10	Gentle Breeze	Large wavelets. Crests begin to break. Foam of glassy appearance. Perhaps scattered white horses.
4	13-18	11-16	Moderate Breeze	Small waves, becoming larger; fairly frequent white horses.
5	19-24	17-21	Fresh Breeze	Moderate waves, taking a more pronounced long form; many white horses are formed. Chance of some spray.
6	25-31	22-27	Strong Breeze	Large waves begin to form; the white foam crests are more extensive everywhere. Probably some spray.
7	32-38	28-33	Near Gale	Sea heaps up and white foam from breaking waves begins to be blown in streaks along the direction of the wind.
8	39-46	34-40	Gale	Moderately high waves of greater length; edges of crests begin to break into spindrift. The foam is blown in well-marked streaks along the direction of the wind.
9	47-54	41-47	Severe Gale	High waves. Dense streaks of foam along the direction of the wind. Crests of waves begin to topple, tumble, and roll over. Spray may affect visibility.
10	55-63	48-55	Storm	Very high waves with long over- hanging crests. he resulting foam, in great patches, is blown in dense white streaks along the direction of the wind. On he whole the surface of the sea takes on a white appearance. The 'tumbling' of the sea becomes heavy and shock-like. Visibility affected.

Last edited on 09 January, 1999 Dave Wheeler weatherman@zetnet.co.uk
Web Space kindly provided by Zetnet Services Ltd, Lerwick, Shetland.
http://www.zetnet.co.uk/sigs/weather/Met_Codes/beaufort.htm

Field Collection Procedures for Water Samples

Scope and Application

This protocol describes the techniques used to collect water samples in the field in a way that neither contaminates, loses, or changes the chemical form of the analytes of interest. The samples are collected in the field into previously cleaned and tested (if necessary) sample bottles of a material appropriate to the analysis to be conducted. Pre-cleaned sampling equipment is used for each site, whenever possible and/or when necessary. Appropriate sampling technique and measuring equipment may vary depending on the location, sample type, sampling objective, and weather. Trade names used in connection with equipment or supplies do not constitute an endorsement of the product. Safety equipment is always used while water sampling including gloves, waders and eye protection. Safety equipment helps to protect the sampler from potential contaminants and to prevent sample contamination.

Summary of Method

Appropriate sample containers and field measurement gear as well as sampling gear are transported to the site where samples are collected according to each sample's protocol. Water velocity, turbidity, temperature, pH, conductivity, dissolved oxygen as well as other field data are measured and recorded using the appropriate equipment. These field data measurement protocols are provided in this Field Measurement SOP. Samples are immediately put on ice and appropriately shipped to the authorized laboratories. This procedure has been modified from the Texas Natural Resources Conservation Commission's Procedure Manual for Surface Water Quality Monitoring, with major input from the United State's Geological Survey's (USGS's) National Water Quality Assessment (NAWQA) Protocol for Collection of Stream Water Samples.

WATER SAMPLE COLLECTION

Water chemistry and bacteriological samples, as requested, are collected at the same location. *Water samples are best collected before any other work is done at the site*. If other work (e.g., sediment sample collection, flow measurement or biological/habitat sample collection or assessment) is done after or downstream of the collection of water samples, it might be difficult to collect representative samples for water chemistry and bacteriology from the disturbed stream. Care must be taken, though, to not disturb sediment collection sites when taking water samples. Don't be trampling where you are sampling.