Group B: Data Generation and Acquisition

10.0 Sampling Process Design

The monitoring station locations for water, sediment and fish tissue samples are summarized in Table 10.0. A total of 3 stations are included in the compliance monitoring program. All monitoring stations were selected based on the locations specified in Attachment A to Resolution No. R11-008 (Appendix H). Samples shall be collected by designated specialized contractors that have the required equipment and tools to properly collect and process the required samples. Sampling efforts shall include gathering data of onsite conditions, obtaining water quality measurements and collecting grab samples for analysis of the required parameters.

Samples shall be collected in clean sample containers that are made of appropriate materials, have adequate volume, and contain the correct preservative required for analysis as provided by the laboratory. Appendix D provides the Chain of Custody (COC) for water column, sediment and fish tissue analyses.

Table 10.0 – Sample Stations

Water Body Name	Station ID	Station	Station Location	Sample Media and Parameters[1]
Dominguez Channel Estuary	01	Discharge Point 001 Station	33 ° 47'33.45" N 118 13'48.88" W	**Water Column / TSS:** Lead, Zinc, Copper, PCBs, DDT, benzo[a]anthracene, benzo[a]pyrene, chrysene, phenanthrene, and pyrene, temperature, dissolved oxygen, pH, electrical conductivity and receiving water flow
	03	Discharge Point 003 Station	33 ° 47'08.39" N 118 14'05.95" W	**Water Column / TSS:** Lead, Zinc, Copper, PCBs, DDT, benzo[a]anthracene, benzo[a]pyrene, chrysene, phenanthrene, and pyrene, temperature, dissolved oxygen, pH, electrical conductivity and receiving water flow **Sediment:** Sediment Chemistry[2], Toxicity, Benthic Community Effect
	04	Fish Tissue Sampling Station[3]	33 ° 46'40.94" N 118 ° 14'24.01" W	**Fish Tissue:** Chlordane, Dieldrin Toxaphene, DDT and PCBs

1 – Sampling shall be designed to collect sufficient volumes of suspended solids to allow for analysis of the listed pollutants in the bulk sediment.
2 – Sediment bed samples shall be collected at Station 03 only. Sediment chemistry samples shall be analyzed for the full chemical suite as included in Attachment A of the SQO-Part 1.
3 – Fish tissue sampling location is subject to change depending on receiving water conditions. If no fish are available within the Dominguez Channel Estuary during a sampling event, the sampling station may be moved downstream to a location in close proximity to the Estuary (i.e. – northeast end of consolidated slip).

In the event a sampling site becomes inaccessible, documentation shall be maintained for that particular sampling location noting the conditions hindering access to the location.

ED_002551_00000687-00033

Samples shall be targeted for collection 24 hours after a storm event to allow for runoff to reach the receiving waters and to improve the likelihood of sampling in less dangerous conditions than those present at the start of a storm.

DRAFT

ED_002551_00000687-00034

11.0 Sampling Methods

The following protocols describe the techniques to be used to collect field samples in a way that neither contaminates, loses or changes the chemical form of the analytes of interest. All samples shall be collected using boats equipped with specialized equipment as provided by the contracted sampling company. Samples shall be collected in areas where the vessel does not interfere with the water being collected. The procedures for collecting field samples shall follow the SWAMP standard operating procedure for *Collection of Water and Bed Sediment Samples with Associated Field Measurements and Physical Habitat in California* (Appendix F) and the SQO – Part 1 (Appendix G) sediment sampling procedures.

11.1 Water Column and TSS Sample Collection

Water quality monitoring shall consist of field measurements and the collection of water samples for chemical analyses. All field instruments shall be calibrated per manufacturer's instructions. Calibrations shall be documented and maintained on file. Each instrument used to collect field measurements must be allowed to completely equilibrate before recording measurements.

Water column samples shall be collected from the surface during two wet weather events and one dry weather event, and analyzed for the required metals, PCBs, DDT and PAH constituents as noted in Table 10.0. For each sampling event, Station 01 and Station 03 shall be monitored for pH, temperature, dissolved oxygen, electrical conductivity and flow using the appropriate field equipment. Field measurements, including water depth, shall be recorded on a field datasheet. Additionally, TSS samples shall be collected at different depths (surface, mid-water column and bottom) within the water column.

Surface samples are defined as samples collected between 0 and 1 meter. Mid water column samples are defined as samples collected at 50% of the total depth of the sampling location. The overall water depth shall be determined in the field during the time of sampling to account for changes of the water column depth that may result from uncontrollable factors, such as tidal patterns, seasonal fluctuations, input from precipitation / loss from evaporation, etc. Bottom sample depths are those samples collected within 1 meter above the bed of the estuary.

TSS samples collected at different depths shall be consolidated into one sample for analysis of the pollutants in the bulk sediment. Proper gloves must be worn to prevent contamination of the samples and to protect the sampler from environmental hazards. A manual containing the standard operating procedures for all field analyses, including records of instrument calibration and maintenance, and quality control procedures shall be maintained on site. Refer to Appendix F for detailed SWAMP sampling protocols.

11.2 Sediment Sample Collection

Assessment of sediment quality shall consist of measuring and integrating data gathered from three lines of evidence (LOE), as specified in the SQO – Part 1, including sediment chemistry analysis, sediment toxicity and benthic community condition.

Sediment samples shall be collected at Station 03 with the use of a mechanical sediment Van Veen grab sampler. The grab sampler must be slowly lowered to the bottom with

ED_002551_00000687-00035

minimum substrate disturbance. Surface sediment shall be obtained within the upper 5 cm for chemistry and toxicity analyses. Benthic samples shall be screened through a 1.0 mm mesh and the entire contents of the grab sample, with a minimum penetration depth of 5 cm, shall be collected for benthic community analyses. Once sediment has been collected, the grab sampler shall be retrieved at a moderate speed.

Upon retrieval, the grab sample must be examined to ensure that the sediment surface is undisturbed and that the grab sample is not subject for rejection. The sample must be rejected if the following are not met:

- Mud surface must not be pressing out of the top of the sampler
- Water must not be leaking out along the sides of the sediment in the grab sampler (this ensures the surface sediment is not washed out)
- Sediment surface must be flat and level in the sampler (if it is not level, the grab tilted over before closing).

The sediment sampler must be cleaned prior to sampling EACH monitoring station, and processing of the sediment sample must be performed with reference to SWAMP protocols.

11.3 Fish Tissue Sample Collection

Fish tissue monitoring shall be conducted within the Dominguez Channel Estuary at Station 04 only. If no fish are available in the Estuary's established location during the sampling event, the fish tissue station may change to a location downstream of Station 04 in close proximity to the Estuary (i.e. northeast end of consolidated slip). Target species shall be selected based on residency, local abundance and fish size at the time of field collection. Tissues analyzed shall be based on the most common preparation for the selected fish species.

Fish selection shall be contingent upon the following considerations:

- The fish selected should be one fished in the harbor;
- The fish selected should have a fish consumption advisory or demonstrate elevated concentrations of PCBs and DDT within its tissue;[3] and
- The fish must be abundant in the water body of interest.

In general, filet muscle tissue with the skin off will be used for analysis. Dissection and compositing of muscle tissue will be performed following USEPA guidance[4] and/or Bioaccumulation Oversight Group[5] (BOG) protocols. Dissection and compositing methods will be performed in the analytical laboratory. Fish collected shall be visually observed, measured and wrapped in aluminum foil and placed in a waterproof plastic bag that is labeled or tagged appropriately. Packaged individual specimens in a composite sample

[3] For fish consumption advisories refer to the Environmental Health Hazard Assessment (OEHHA) website: https://oehha.ca.gov/

[4] USEPA. 2000. Guidance for Assessing Chemical Contaminant Data for Use in Fish Advisories: Volume 1, Fish Sampling and Analysis. US Environmental Protection Agency. Office of Water. Washington DC.

[5] The Bioaccumulation Oversight Group (BOG) is a subcommittee of the SWAMP Roundtable that provides oversight of SWAMP's state-wide bioaccumulation monitoring program.

ED_002551_00000687-00036

should be kept together, if possible. Once packaged, samples should be cooled on ice immediately.

Every effort shall be taken to ensure that any sampling technique occurs within the proposed target sampling areas. Numerous factors such as wind, currents, and presence or absence of targeted fish species may require the collection of fish outside the boundaries of the target monitoring station locations. All available resources shall be used if insufficient fish have been caught at target locations. Fish finders or echo sounders can be used to find alternative sampling locations that is as close as practicable to the original monitoring station and still within the waterbodies specified in the Harbor Toxics TMDL. Reasons for relocation and/or any other observations must be noted in the field log.

11.4 Corrective Actions

If problems arise during sampling events, samplers shall document the deficiencies and report to the assigned supervisor. The supervisor shall then be communicated with facility officials to implement corrective actions and avoid future occurrences.

12.0 Sample Handling, Preservation, and Custody

12.1 Sample Collection and Initial Preservation

Sample collection includes all stages of sampling directly connected with capturing the sample, assuring that the sample is a true representation of the medium and preventing cross contamination. The following sections describe sample handling procedures to be followed throughout this program.

12.2 Sample Labels

Each sample must be labeled with labels provided by the laboratory and contain the following information:

- Facility Name:
- Monitoring Station / Location
- Initials of Sampling Personnel
- Date and time of collection
- Preservative present in container (i.e. hydrochloric acid "HCl")
- Analysis to be performed

12.3 Sample Log / Sample Collection Information

General sampling information is recorded on the Chain of Custody at the time of sampling in sufficient detail so that such information can be readily available. Sampling information recorded on the Chain of Custody includes:

- Facility Name
- Sample Point Location Name
- Signature and Printed Name of Person Responsible for Sampling
- Sample ID

DRAFT

- Sample Date/Time
- Preservatives Added
- Field Measurement Results
- Signature and Printed Name of Person Responsible for Receiving the Samples

12.4 Chain of Custody Procedures

The chain of custody form documents sample possession from the time of collection until the sample is analyzed. It also serves as a sample inventory and an analysis order form. Once the chain of custody record is received by the laboratory it is checked for accuracy and completeness. Information for each sample including the sample number, date of sampling, time of sampling, the sample matrix, and the required analyses, is entered on the form. The form should be filled out with a waterproof pen after the samples are labeled and ready for shipment. To keep it dry, the chain of custody record should be placed in a sealed plastic bag and sent to the laboratory inside the sample cooler. Facility personnel are responsible for retaining a copy of the original chain of custody.

12.5 Analytical Information

The facility personnel or an authorized contractor must properly collect, pack and document the sample collection utilizing applicable methods and procedures. Once the samples have been collected and prepared for shipment to the laboratory, the authorized and qualified sampling contractor shall contact the appropriate laboratories for sample pickup or coordinate sample drop off to the laboratory. Various analyses have different hold times (the maximum time allowed between the collection and analysis of a sample). Samples must be transported to the laboratory as soon as possible, but no more than **24 hours** after sample collection to avoid exceeding any holding times.

Sample containers and holding conditions for the required constituents required under this monitoring program are provided in Appendix A. A list of analytical methods, reporting limits and method detection levels of the laboratory analyses for each medium are included in Appendix B and the corresponding target concentration for these parameters as provided in Attachment A to Resolution No. R11-008 are included in Appendix C.

ED_002551_00000687-00038

13.0 Analytical Methods

This section describes the management of the samples after collection. Included in this section are sample preservation techniques, sample storage, descriptions of the analyses and parameters to be analyzed, the appropriate analytical methods to be used, required documentation, and the proper quality assurance/quality control (QA/QC) procedures to follow.

13.1 Analytical Methodology

The analytical methods for all analyses are listed in Appendix B. Duplicate and spike samples shall be analyzed at the frequency specified in the applicable analytical method; if the method does not specify a frequency, duplicate samples and spike samples shall be analyzed at a frequency of 5% (1 in 20 samples) with at least one if there are fewer than 20 samples in a batch. A batch is defined as a single analytical run encompassing no more than 24 hours from start to finish.

13.2 Sample Preservation and Storage

Sample preservation is dependent on the specific analyses that are to be performed. Each sample is to be collected in sample containers provided by the laboratory. The required analyses call for different preservation techniques. The laboratory provides the proper containers with the appropriate preservatives already added to the containers. Field measurement of pH, temperature, dissolved oxygen, electrical conductivity, and flow may be field-tested by the sampler, using the appropriate instrumentation. A summary of preservation techniques is included in Appendix A, including sample bottles and holding times.

Sample storage is an integral part of the sample preservation. The samples are to be stored until they are transported to the laboratory at a temperature of 4 degrees Celsius either in a refrigerator or on ice in a cooler. A summary of storage temperatures is also included in Appendix A.

DRAFT

ED_002551_00000687-00039

14.0 Quality Control

To ensure high quality data, all parties involved in executing the facility's QAPP shall adhere to the standard operating procedures and methods as specified in the plan. Field and laboratory data generated during this TMDL monitoring program shall be reviewed using the data quality objectives described in Section 7.0 for the duration of the monitoring program, from the point of collection though laboratory analysis and reporting. Corrective actions shall be implemented when sample collection or analysis deficiencies are identified. Corrective actions involve checking procedures, reviewing documentation and calculations to identify possible errors, and re-analyzing samples, if possible.

The facility's QA/QC program is designed to ensure that all elements of the QAPP are implemented and that they are implemented by properly trained personnel. Each person who shall perform or supervise sampling and/or perform discharge point inspections (storm and dry season) in accordance with this program must have a working knowledge of this plan, be familiar with the facility's MRP, and be otherwise qualified to carry out the associated tasks. Each of these persons shall receive a copy of this program for their review and shall be trained on the requirements of this monitoring plan and proper sample collection and water quality monitoring practices. All monitoring conducted in compliance with the MRP must be comparable with the Quality Assurance requirements specified in SWAMP.

DRAFT

ED_002551_00000687-00040

15.0 Instrument / Equipment Maintenance and Calibration

Field equipment shall be maintained in accordance with manufacturer specifications. Maintenance shall be provided on an as needed basis. Prior to each sampling event, all instruments required shall be inspected during calibration procedures. All equipment must be tested for appropriate responses prior to analysis. Any deficiencies shall be identified, and corrective actions implemented. All equipment and instruments that may come into contact with sampling media must be properly cleaned prior to each use and between sampling events to prevent cross contamination between samples. The following procedure shall be implemented to ensure the sampling equipment is properly cleaned:

1. Pre-wash rinse of sampling equipment with tap or site water
2. Wash sampling equipment with warm tap water or site water and specialized soap[6] solution
3. Rinse using tap or site water
4. Rinse thoroughly with organic free water and place on a clean foil wrapped surface to air dry
5. Store in a clean, closed container for next use

After decontamination, equipment should only be handled by personnel wearing clean gloves to prevent re-contamination. All equipment shall be stored in clean containers away from the decontamination area to prevent re-contamination. When sampling each station, gloves must be worn at all times and shall be discarded after processing each station. Gloves must be replaced prior to handling decontaminated instruments or work surfaces.

Contract laboratories and sampler contractors are responsible for maintaining analytical and sampling equipment in accordance with their standard operating procedures, including those specified by the manufacturer and the analytical methods used. If contractor equipment malfunctions, facility officials must be notified, and data is not to be collected or analyzed using the deficient instrument. All problems and corrective actions must be recorded by the contract laboratory and samplers. Facility officials must address any problems identified during sampling events and update the QAPP accordingly.

16.0 Data Management

Involved parties responsible for the implementation of this QAPP are to maintain all data records, including field generated data and laboratory data. Results obtained during this monitoring program must be reported in the annual monitoring report to be submitted to the LARWQCB. All receiving water monitoring data shall also be submitted in accordance with the California Environmental Data Exchange Network (CEDEN). The discharger shall submit all receiving water monitoring data in accordance with CEDEN, when feasible.

[6] Specialized soap used for washing equipment shall consist of detergent ideal for cleaning contaminants from glassware, metals, and plastic equipment, such as Alconox™ soap.

ED_002551_00000687-00041

Group C Elements: Assessment and Oversight

17.0 Assessment and Response Actions

During sample collection events, samplers must review the appropriate standard operating procedures before going out to the sites to collect samples to ensure all methods are understood and the necessary equipment and supplies are ready for use. All measurements obtained in the field and all collected samples shall be visually evaluated to ensure all information required in the field data sheets is gathered prior to leaving a monitoring station. If issues are identified, the facility manager shall be notified, and appropriate actions shall be taken. Documentation of any deficiencies is to be recorded and maintained on site. Deficiencies must be noted in the Annual Report submitted to the LARWQCB.

DRAFT

ED_002551_00000687-00042

Group D Elements: Data Validation and Usability

18.0 Data Validation and Usability

This section addresses the quality assurance activities that occur following the completion of sampling activities, including data review, verification and validation. Data generated for this monitoring program shall be reviewed against the data quality objectives specified in this QAPP. Field, laboratory and facility personnel shall be responsible for reviewing the data and verifying that sample collection, handling and analysis procedures were in accordance with the methods specified in this plan and its attached sampling protocols found in Appendix F and Appendix G.

Data verification and validation for sample collection and handling activities shall consist of the following tasks:

- Verification that the sampling activities were performed in accordance with QAPP requirements;
- Documentation of any field changes or discrepancies;
- Verification that the field activities were properly documented;
- Verification of proper completion of sample labels and secure storage of samples; and
- Verification that all samples recorded in the field log were received by the laboratory.

Data verification and validation for the sample analysis activities shall consists of the following tasks:

- Appropriate methodology has been followed;
- Instrument calibrations are correct;
- QC samples meet performance criteria;
- Analytical results are complete and correct; and
- Documentation is complete.

Analytical laboratory result copies shall be emailed to all involved parties responsible for implementation of the QAPP. Sample results shall be evaluated immediately upon receipt by the facility officials and the environmental consultant.

19.0 Reconciliation with User Requirements

The data quality shall be evaluated according to this document, with respect to sampling design, sampling method, field and laboratory analyses, quality control and maintenance. By properly following the guidelines in this document and documents referenced the data quality shall be validated. If samples or procedures used in this study fail to meet the guidelines listed in this document, the data shall be flagged and reported to the facility manager and associated parties responsible for the implementation of this QAPP. Any flagged data shall be carefully scrutinized to determine areas of improvement that shall improve data quality and usability.

DRAFT

FIGURE 1:

VICINITY TOPOGRAPHIC MAP

DRAFT

FIGURE 1
VICINITY TOPOGRAPHIC MAP

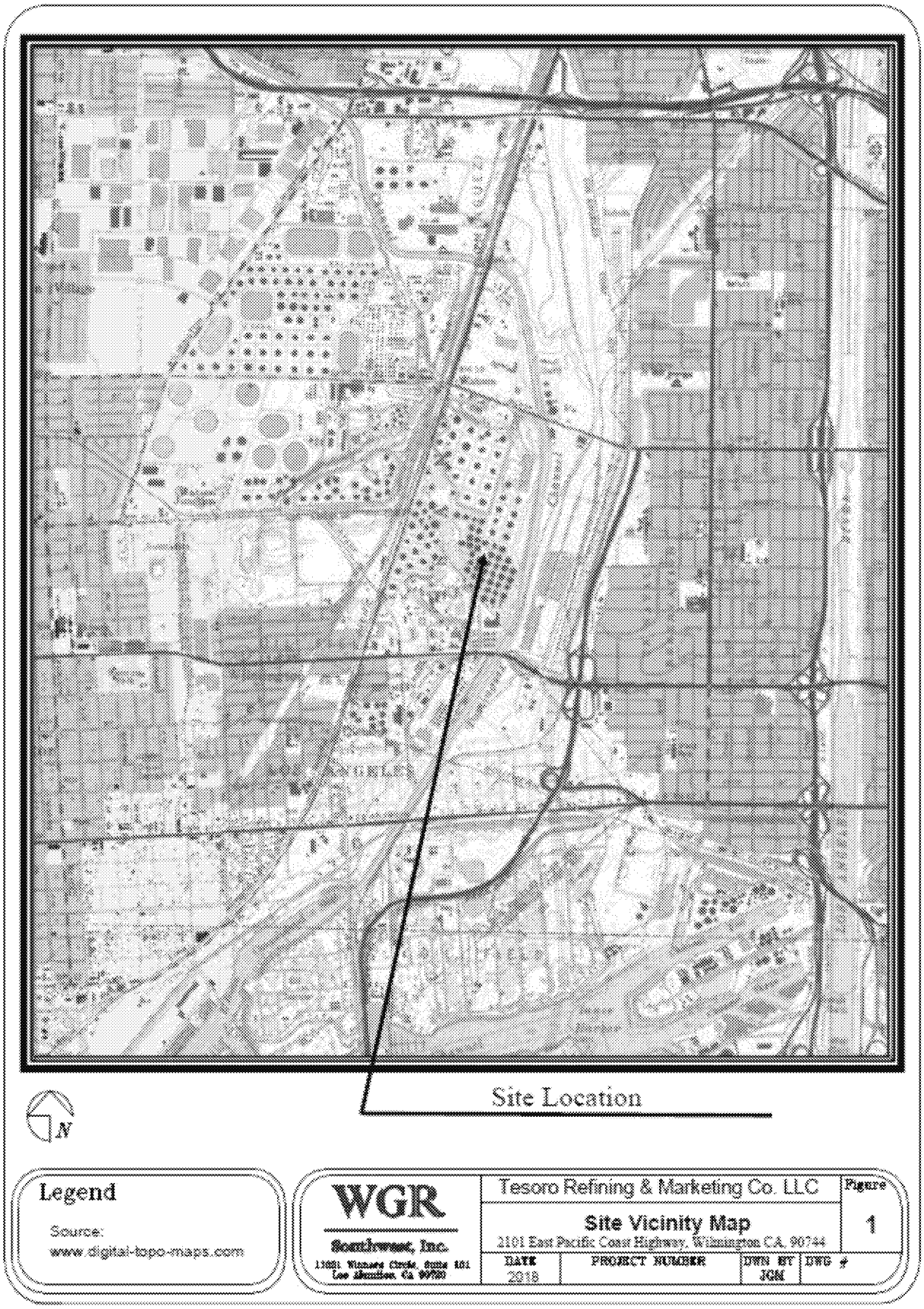

FIGURE 2:

FACILITY FLOW DIAGRAM

DRAFT

Storm Water System

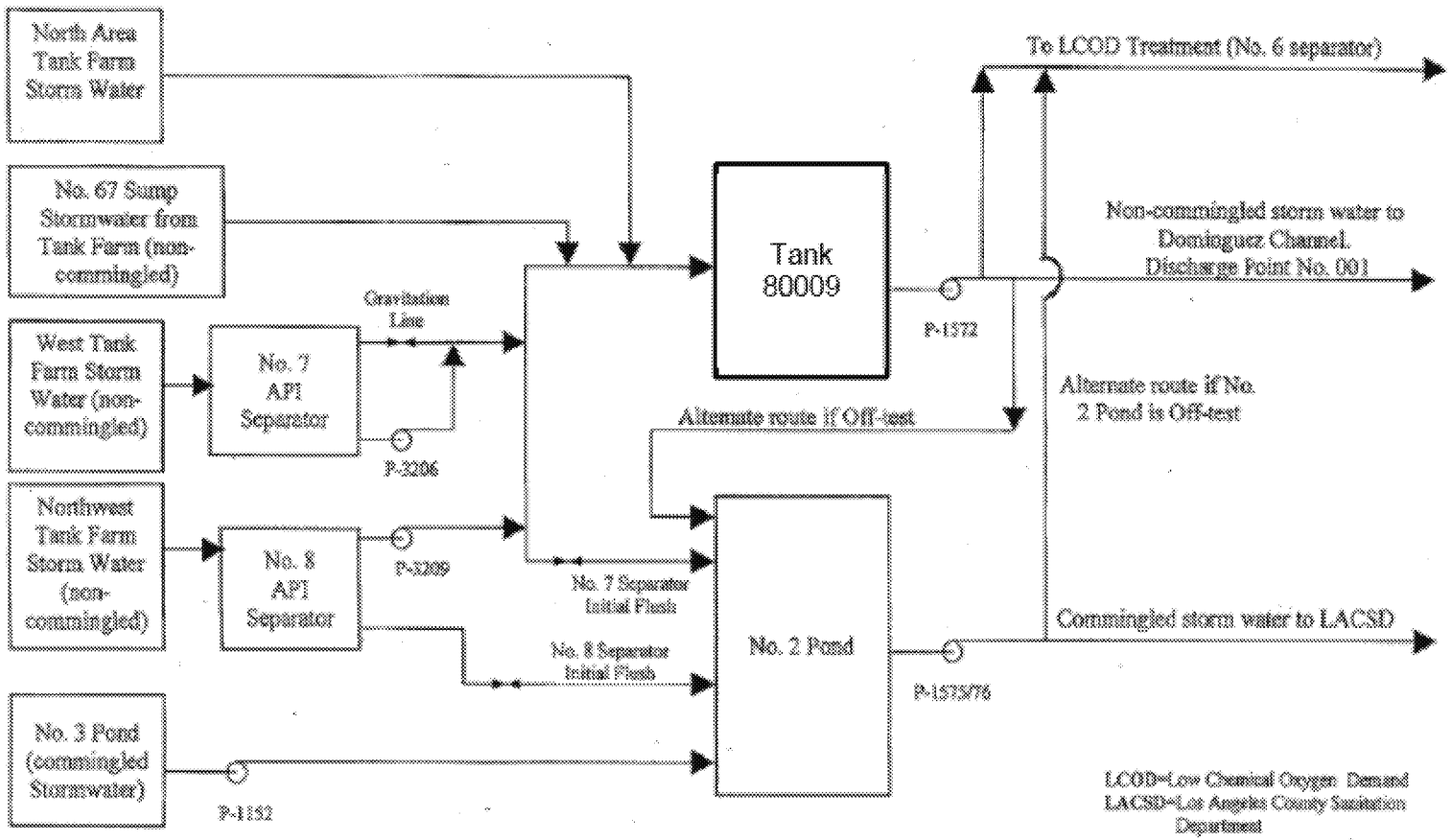

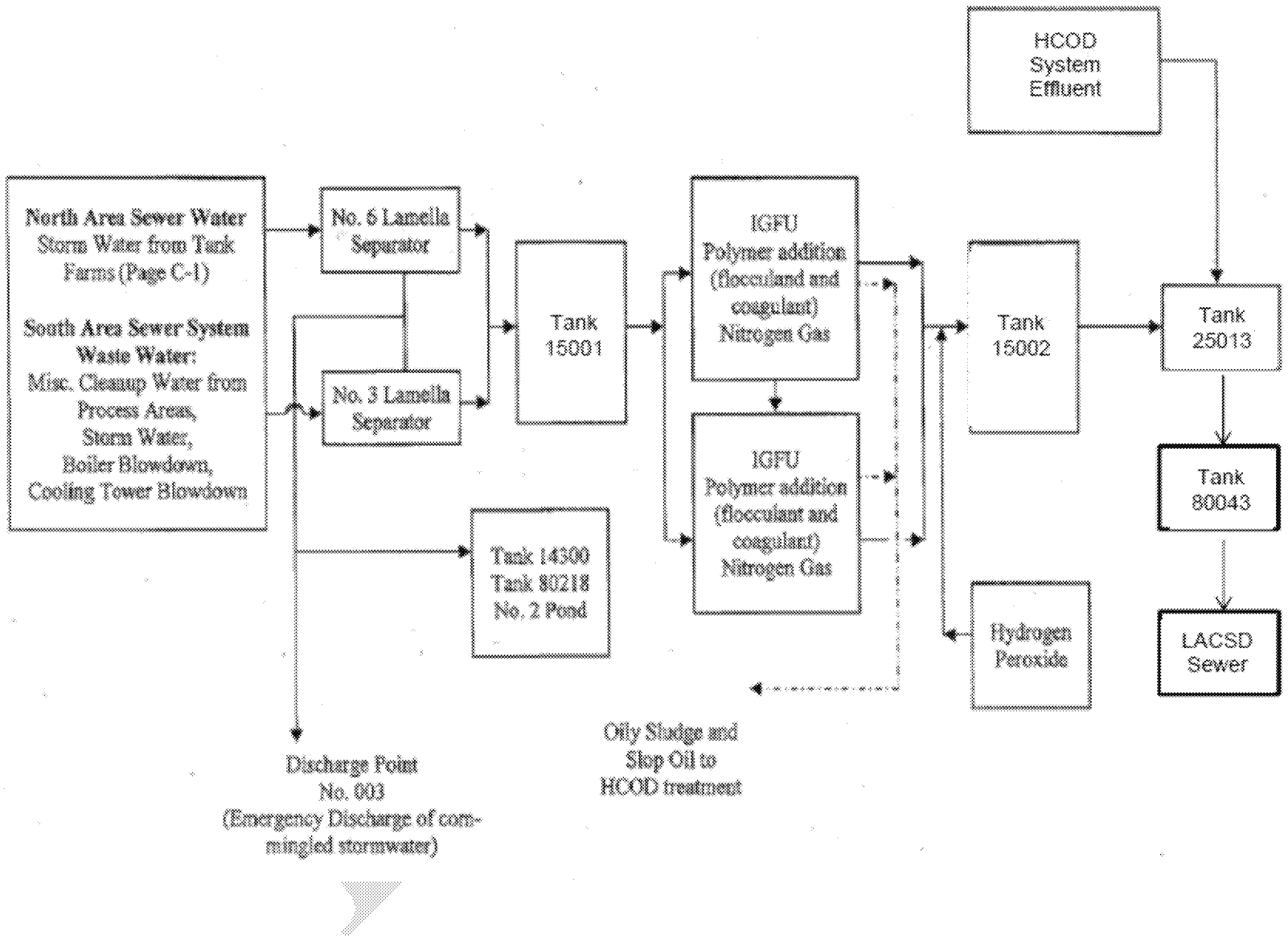
HCOD System Effluent
North Area Sewer Water Storm Water from Tank Farms (Page C-1)
South Area Sewer System Waste Water: Misc. Cleanup Water from Process Areas, Storm Water, Boiler Blowdown, Cooling Tower Blowdown
No. 6 Lamella Separator
No. 3 Lamella Separator
Tank 15001
IGFU Polymer addition (flocculant and coagulant) Nitrogen Gas
IGFU Polymer addition (flocculant and coagulant) Nitrogen Gas
Tank 15002
Tank 25013
Tank 80043
LACSD Sewer
Hydrogen Peroxide
Tank 14300 Tank 80218 No. 2 Pond
Discharge Point No. 003 (Emergency Discharge of com-mingled stormwater)
Oily Sludge and Slop Oil to HCOD treatment

FIGURE 3:

HARBOR TOXICS TMDL
DOMINGUEZ CHANNEL ESTUARY
MONITORING LOCATION

DRAFT

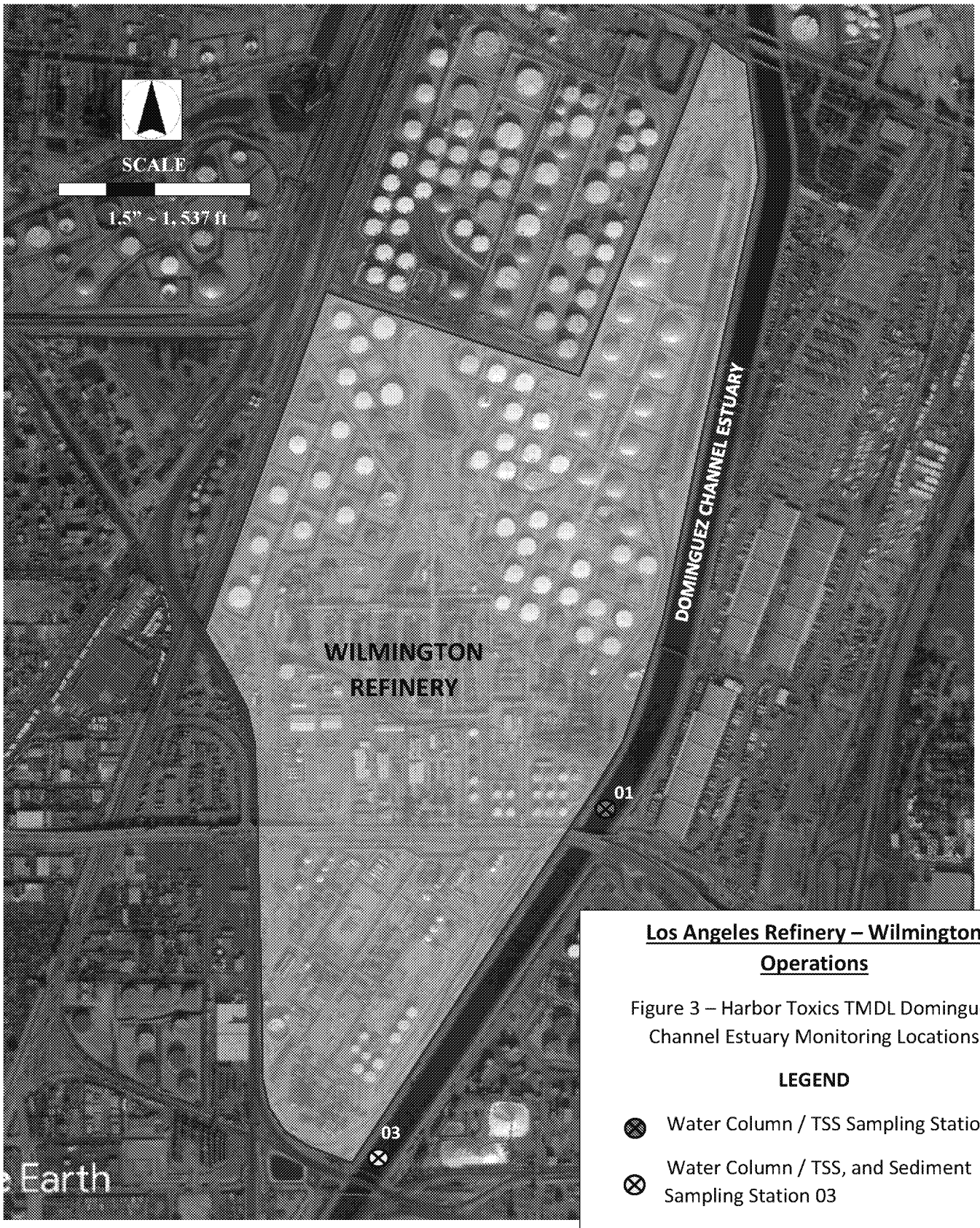

Los Angeles Refinery – Wilmington Operations

Figure 3 – Harbor Toxics TMDL Dominguez Channel Estuary Monitoring Locations

LEGEND

- Water Column / TSS Sampling Station 01
- Water Column / TSS, and Sediment Sampling Station 03

WGR
Not Your Typical Consultant

FIGURE 4:

HARBOR TOXICS TMDL DOMINGUEZ CHANNEL ESTUARY FISH TISSUE MONITORING LOCATION

DRAFT

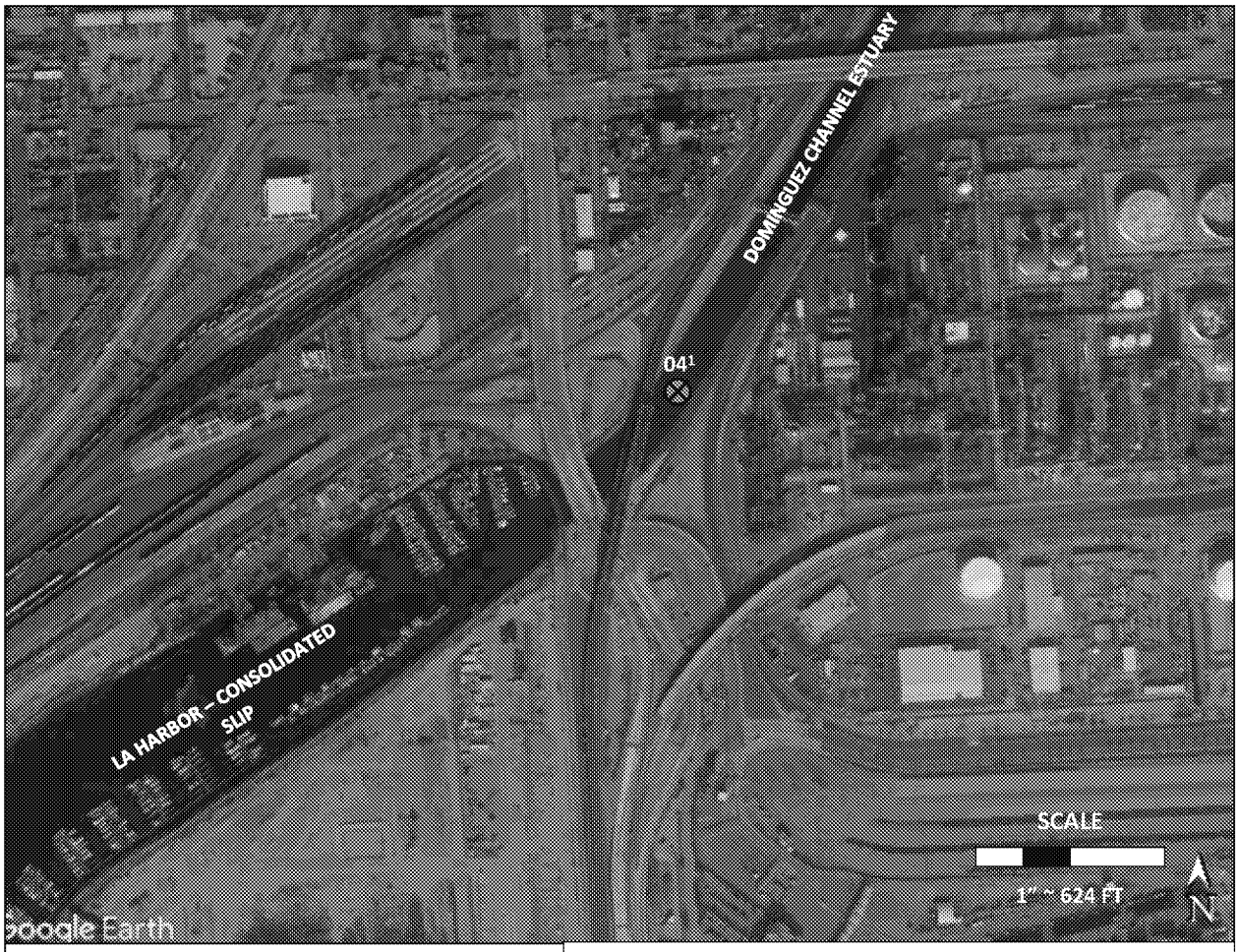

Tesoro Refining & Marketing Company LLC
Los Angeles Refinery – Wilmington Operations

Figure 4 – Harbor Toxics TMDL Fish Tissue Monitoring Station

LEGEND:

Fish Tissue Monitoring Location 04

NOTES:

[1] The fish tissue monitoring station is subject to change depending on sampling conditions. If no fish are available in the Dominguez Channel Estuary during sampling events, the fish tissue sampling location may be moved downstream in close proximity to the Estuary.

WGR
Your Typical Consultant

APPENDIX A:

SAMPLE CONTAINERS AND HOLDING CONDITIONS

DRAFT

Appendix A: Sample Containers and Holding Conditions[1]			
Parameter	**Container Type / Volume**	**Holding Time**	**Preservative**
Water/TSS Samples[2]			
pH	N/A	15 minutes	N/A
Dissolved Oxygen	N/A	15 minutes	N/A
Electrical Conductivity	1 - 125 mL HDPE	28 days	None
Metals: Copper, Lead and Zinc	1 - 250 mL HDPE	180 days	HNO3 ; Cool ≤4°C
DDT	2 - 1L Amber Glass	7 days	Cool ≤4°C
PCBs	2 - 1L Amber Glass	7 days	Cool ≤4°C
PAHs: Benzo[a]anthracene, Benzo[a]pyrene, Chrysene, Phenanthrene, Pyrene	2 - 1L Amber Glass	7 days	Cool ≤4°C
Sediment			
Total Organic Carbon	1- 4-oz glass with teflon lid	14 days	Cool ≤4°C
Metals	1 - 4-oz glass with teflon lid	14 days	Cool ≤6°C
		12 months	Freeze ≤ -20°C
Mercury	1 - 4oz glass with teflon lid	14 days	Cool ≤6°C
		12 months	Freeze ≤ -20°C
DDT	1 - 4-oz glass with teflon lid	14 days	Cool ≤4°C
PAHs	1 - 4-oz amber glass with teflon lid	14 days	Cool ≤4°C
PCBs	1 - 4-oz glass with teflon lid	14 days	Cool ≤4°C
Benthic Community Effect[3]	1 - 0.5-gallon poly container	None	Cool ≤4°C
Sediment Toxicity	4 - 1L wide mouth polyethylene with teflon lid liner	14 days	Cool ≤4°C
Fish Tissue			
DDT	Polyethylene bag or 4-oz glass jar	14 days to extraction	Cool ≤6°C
		1 year to extraction; samples must be extracted within 14 days of thawing	Freeze ≤ -20°C
		40 days after extraction	Cool ≤6°C
PCBs	Polyethylene bag or 4-oz glass jar	None	Cool ≤6°C within 24 hours, then Freeze ≤ -20°C

1- Sample preservation is intended as a guidance only. The selection of sample container and sample volume may vary per contracted / subcontracted laboratories.

2 - Water column analysis of flow, temperature, dissolved oxygen, electrical conductivity and pH shall be conducted in the field using the appropriate calibrated field equipment. A record of the calibration and the field readings shall be documented in the appropriate form.

3 – Samples for benthic community effect are preserved in the field by maintaining samples cold. Once submitted to the laboratory, samples are stored in formalin for at least 72 hours and then samples are maintained in 70% ethanol. Samples can be stored for up to 1 year before having to refresh the ethanol.

DRAFT

APPENDIX B:

ANALYTICAL METHODS, REPORTING LIMITS AND METHOD DETECTION LEVELS

DRAFT

Appendix B: Analytical Methods, Reporting Limits and Method Detection Levels[1,2]				
Parameter	Analytical Method	Method Detection Levels	Reporting Limit	Units
WATER COLUMN / TSS ANALYSIS				
Copper	EPA 6020	0.117	1.0	ug/L
Lead	EPA 6020	0.0543	1.0	ug/L
Zinc	EPA 6020	4.49	5.0	ug/L
DDT				
o,p'-DDT	USEPA 1699	0.0000172	0.00004	ug/L
p,p'-DDT	USEPA 1699	0.0000172	0.00004	ug/L
PAHs				
Benzo[a]anthracene	USEPA 8270C	0.024	0.20	ug/L
Benzo[a]pyrene	USEPA 8270C	0.036	0.20	ug/L
Chrysene	USEPA 8270C	0.019	0.20	ug/L
Phenanthrene	USEPA 8270C	0.031	0.20	ug/L
Pyrene	USEPA 8270C	0.025	0.20	ug/L
PCBs[3]				
PCB008	EPA 1668	0.000034	0.0001	ug/L
PCB018	EPA 1668	0.000007	0.0002	ug/L
PCB028	EPA 1668	0.000004	0.0002	ug/L
PCB044	EPA 1668	0.000003	0.0003	ug/L
PCB052	EPA 1668	0.000003	0.0001	ug/L
PCB066	EPA 1668	0.000003	0.0001	ug/L
PCB101	EPA 1668	0.000005	0.0003	ug/L
PCB105	EPA 1668	0.000004	0.0001	ug/L
PCB118	EPA 1668	0.000004	0.0001	ug/L
PCB128	EPA 1668	0.000005	0.0002	ug/L
PCB138	EPA 1668	0.000005	0.0003	ug/L
PCB153	EPA 1668	0.000004	0.0002	ug/L
PCB170	EPA 1668	0.000004	0.0001	ug/L
PCB180	EPA 1668	0.000003	0.0002	ug/L
PCB187	EPA 1668	0.000006	0.0001	ug/L
PCB195	EPA 1668	0.000003	0.0001	ug/L
PCB206	EPA 1668	0.000003	0.0001	ug/L
PCB209	EPA 1668	0.000004	0.0001	ug/L
Footnotes:				
1 - Reporting limits (RLs) and Method Detection Limits (MDLs) listed above are those provided by Eurofins Laboratory for the water column analysis required under the Harbor Toxics TMDL Monitoring Program.				
2 - Water column temperature, dissolved oxygen, pH, electrical conductivity and receiving water flow shall be measured in the field with the appropriate calibrated instrument				
3 - Select PCB MDLs and RLs are provided, however, total PCBs shall be defined as the sum of all 209 PCB congeners				

Appendix B: Analytical Methods, Reporting Limits and Method Detection Levels[1]				
Parameter	**Analytical Method**	**Method Detection Levels**	**Reporting Limit**	**Units**
SEDIMENT ANALYSIS				
Total Organic Carbon	EPA 9060A	170	500	mg/kg
Percent Fines	ASTM D4464	0.01	0.1	0-25
Metals				
Cadmium	EPA 6020	0.0572	0.1	mg/kg
Copper	EPA 6020	0.0419	0.1	mg/kg
Lead	EPA 6020	0.0659	0.1	mg/kg
Mercury	EPA 7471A	0.00587	0.02	mg/kg
Zinc	EPA 6020	0.7950	1.00	mg/kg
PAHs				
Acenaphthene	EPA 8270C SIM PAHs	2.4	10	ug/kg
Anthracene	EPA 8270C SIM PAHs	3.5	10	ug/kg
Biphenyl	EPA 8270C SIM PAHs	1.9	10	ug/kg
Naphthalene	EPA 8270C SIM PAHs	3.5	10	ug/kg
2,6-dimethylnaphthalene	EPA 8270C SIM PAHs	1.7	10	ug/kg
Fluorene	EPA 8270C SIM PAHs	3.1	10	ug/kg
1-methylnaphthalene	EPA 8270C SIM PAHs	2.3	10	ug/kg
2-methylnaphthalene	EPA 8270C SIM PAHs	2.3	10	ug/kg
1-methylphenanthrene	EPA 8270C SIM PAHs	2.5	10	ug/kg
Phenanthrene	EPA 8270C SIM PAHs	2.2	10	ug/kg
Benzo(a)anthracene	EPA 8270C SIM PAHs	2.2	10	ug/kg
Benzo(a)pyrene	EPA 8270C SIM PAHs	1.8	10	ug/kg
Benzo(e)pyrene	EPA 8270C SIM PAHs	2.0	10	ug/kg
Chrysene	EPA 8270C SIM PAHs	2.2	10	ug/kg
Dibenz(a,h)anthracene	EPA 8270C SIM PAHs	2.0	10	ug/kg
Fluoranthene	EPA 8270C SIM PAHs	1.8	10	ug/kg
Perylene	EPA 8270C SIM PAHs	2.4	10	ug/kg
Pyrene	EPA 8270C SIM PAHs	2.2	10	ug/kg
Pesticides[2]				
Alpha Chlordane	EPA 1699	0.00959	0.04	ug/kg
Gamma Chlordane	EPA 1699	0.0114	0.04	ug/kg
Trans Nonachlor	EPA 8081A	0.27	1.0	ug/kg
Dieldrin	EPA 1699	0.0105	0.04	ug/kg
o,p'-DDE	EPA 8270C PEST-SIM	0.035	0.2	ug/kg
o,p'-DDD	EPA 8270C PEST-SIM	0.076	0.2	ug/kg
o'p-DDT	EPA 8270C PEST-SIM	0.062	0.2	ug/kg
p,p'-DDD	EPA 8270C PEST-SIM	0.04	0.2	ug/kg
p,p'-DDE	EPA 8270C PEST-SIM	0.04	0.2	ug/kg
p,p'-DDT	EPA 8270C PEST-SIM	0.053	0.2	ug/kg
PCBs				
PCB008	EPA 8270C SIM PCB Congeners	0.077	0.4	ug/kg
PCB018	EPA 8270C SIM PCB Congeners	0.065	0.2	ug/kg

Parameter	Analytical Method	Method Detection Levels	Reporting Limit	Units
PCB028	EPA 8270C SIM PCB Congeners	0.069	0.2	ug/kg
PCB044	EPA 8270C SIM PCB Congeners	0.15	0.2	ug/kg
PCB052	EPA 8270C SIM PCB Congeners	0.19	0.2	ug/kg
PCB066	EPA 8270C SIM PCB Congeners	0.12	0.2	ug/kg
PCB101	EPA 8270C SIM PCB Congeners	0.044	0.2	ug/kg
PCB105	EPA 8270C SIM PCB Congeners	0.053	0.2	ug/kg
PCB118	EPA 8270C SIM PCB Congeners	0.035	0.2	ug/kg
PCB128	EPA 8270C SIM PCB Congeners	0.12	0.2	ug/kg
PCB 138	EPA 8270C SIM PCB Congeners	0.35	0.4	ug/kg
PCB 153	EPA 8270C SIM PCB Congeners	0.35	0.4	ug/kg
PCB170	EPA 8270C SIM PCB Congeners	0.11	0.2	ug/kg
PCB180	EPA 8270C SIM PCB Congeners	0.092	0.2	ug/kg
PCB187	EPA 8270C SIM PCB Congeners	0.1	0.2	ug/kg
PCB195	EPA 8270C SIM PCB Congeners	0.06	0.2	ug/kg
PCB206	EPA 8270C SIM PCB Congeners	0.12	0.2	ug/kg
PCB209	EPA 8270C SIM PCB Congeners	0.061	0.2	ug/kg
Sediment Toxicity & Benthic Community Effects				
Sediment Toxicity analysis shall be performed per the SQO-Part 1 guidelines using percent of control survival as metric. Refer to Table 4, Sediment Toxicity Categorization Values, detailed in the SQO-Part 1 document.				
The Benthic Community Condition shall be assessed through the use of 4 benthic indices to determine the benthic index categorization value and associated disturbance. Refer to Table 5, Benthic Index Categorization Values, of the SQO Part-1 document.				
Footnotes:				
1 - Reporting Limits (RLs) and Method Detection Levels (MDLs) provided are those provided by Eurofins Laboratory for the analyses chosen for the chemical analytes as required in Attachment A of the SQO - Part 1				
2 - The MDLs and RLs for chlordane and dieldrin are subject to change depending on the conclusion of the MDL/RL studies being conducted by Eurofins' subcontract laboratory.				