d. **Sludge (Biosolids) Requirements**[4]

i. The handling, treatment, use, management, and disposal of sludge and solids derived from wastewater treatment must comply with applicable provisions of section 405 of the CWA and USEPA regulations at 40 CFR parts 257, 258, 501, and 503, including all monitoring, record keeping, and reporting requirements.

ii. The discharge of sludge from the Facility in the United States or at a location where the sludge or sludge constituents could be conveyed to the United States by surface or ground water is prohibited.

iii. All sludge generated at the Facility shall be removed from the Facility within 6 months of being generated. Any site in the United States where sludge generated by the Discharger is stored for more than two years will be classified by USEPA as a surface disposal site pursuant to 40 CFR part 503 Subpart C. The Discharger must ensure that the USEPA receives from the operator of any such surface disposal site, the notification required in 40 CFR section 122.21, 180 days before the site becomes a surface disposal site. The Discharger must also ensure that the site operator begins complying fully with the requirements in 40 CFR part 503 Subpart C for surface disposal sites at the two-year start date. If the Discharger wants to store sludge for over two years, or allow a contractor to store sludge for over two years, the Discharger must submit the information in 40 CFR section 503.20(b) to USEPA in writing. The notification must be received by the USEPA 180 days prior to the date at which the site becomes a surface disposal site.

iv. All requirements of 40 CFR part 503 and title 23, division 3, chapter 15 of the CCR are enforceable whether or not the requirements of those regulations are stated in an NPDES permit or any other permit issued to the Discharger.

v. The Discharger shall take all reasonable steps to prevent and minimize any solids and sludge treatment, storage, and transfer in violation of this Order that has a likelihood of adversely affecting human health or the environment in the United States.

vi. Solids and sludge treatment, storage, and transfer shall not create a nuisance, such as objectionable odors or flies, and shall not result in groundwater contamination in the United States. The Discharger shall use a tarp to cover the sludge during any storage or during transportation to the international border.

vii. The solids and sludge treatment and storage site in the United States shall have adequate facilities to divert surface water runoff from adjacent areas to protect the boundaries of the site from erosion, and to prevent drainage from the treatment and storage site. Adequate protection is defined as protection, at the minimum, from a 100-year 24-hour storm event, 100-year peak stream flows as defined by the San Diego County Flood Control Agency, and protection from the highest possible tidal stage that may occur.

viii. The Discharger shall develop a Sludge Spill Prevention and Response Plan.

[4] See Attachment A for definitions of abbreviations and a glossary of common terms used in this Order.

ix. In the event that the Government of Mexico is unable to truck the processed sludge and solids to Mexico for disposal, the Discharger shall develop a Sludge and Solids Contingency Plan to dispose of, or temporarily store, the processed sludge and solids in the United States. Any disposal site or temporary storage site identified in the Sludge and Solids Contingency Plan shall comply with applicable provisions of section 405 of the CWA and USEPA regulations at 40 CFR parts 257, 258, 501, and 503, including all monitoring, record keeping, and reporting requirements. The Discharger shall submit the Sludge and Solids Contingency Plan to the San Diego Water Board and USEPA, no later than 180 days after the adoption of this Order.

x. **Monitoring Requirements**

a) The sludge shall be tested for all priority pollutants as specified in 40 CFR section 131.38 and for Total Threshold Limit Concentration/ Soluble Threshold Limits Concentrations (TTLC/STLC) constituents. This testing shall be done at a frequency dependent on the nature and effect of the sludge storage or disposal practices and at a minimum shall be as required by 40 CFR part 503.

b) If the sludge is stored in the United States for more than 24 hours, the sludge shall be sampled and tested for pH to ensure that the pH remains between 12 and 12.5 for the first two hours and greater than 11.5 for an additional 22 hours.

c) The Discharger shall develop a sampling plan for collection of representative samples for monitoring pollutants and constituents described in subsection a) above. The plan should include number and location of sampling points.

d) Samples of sludge shall be collected according to the procedures for compositing samples outlined in *Test Methods for Evaluating Solid Waste Physical/Chemical Methods* (EPA Publication SW-846, Second Edition, as updated). Samples shall be split, and a portion of the sample preserved, in the event that the results show concentrations of waste constituents that exceed 10 times the STLC listed in title 22 CCR.

e) Results of analyses shall be reported in mg/kg, wet weight and 100 percent dry weight. If the results indicate that the total concentration of any waste constituent is greater than 10 times the STLC value for the constituent listed in title 22 CCR, then the Discharger shall also perform a Waste Extraction Test on the sludge sample pursuant to title 22 CCR requirements.

xi. **Reporting Requirements**. The Discharger shall submit an annual report to USEPA and the San Diego Water Board by March 30 of each year for the period from January 1 through December 31 of the preceding year. The report shall include:

a) Amount of sludge generated that year at the Facility, in dry metric tons, and amount of sludge leaving the Facility;

b) Certification that all sludge was transferred to Mexico and no sludge was stored for more than 6 months in the United States or permanently disposed of in the United States;

c) A description or certification of the ultimate destination of the sludge in Mexico to the best of the Discharger's knowledge; and

d) Results of all monitoring required in Sludge (Biosolids) Requirements, section VI.C.5.d.x of this Order.

e. **Requirements for Receipt of Anaerobically Digestible Material**

If the Discharger proposes to receive hauled-in anaerobically digestible material for injection into an anaerobic digester, the Discharger shall notify the San Diego Water Board and develop and implement standard operating procedures (SOPs) for this activity. If hauled-in waste for digestion is already ongoing, the SOPs shall be developed within 90 days. Otherwise, the SOPs shall be developed prior to initiation of the hauling. The SOPs shall address material handling, including unloading, screening, or other processing prior to anaerobic digestion; transportation; spill prevention; and spill response. In addition, the SOPs shall address avoidance of the introduction of materials that could cause interference, pass-through, or upset of the treatment processes; avoidance of prohibited material; vector control; odor control; operation and maintenance; and the disposition of any solid waste segregated from introduction to the digester. The Discharger shall provide training to its staff on the SOPs and shall maintain records for a minimum of three years for each load received, describing the hauler, waste type, and quantity received. In addition, the Discharger shall maintain records for a minimum of three years for the disposition, location, and quantity of cumulative pre-digestion-segregated solid waste hauled off-site.

6. Other Special Provisions - Responsibilities, Liabilities, Legal Action, Penalties – Not Applicable

7. Compliance Schedules – Not Applicable

VII. COMPLIANCE DETERMINATION

Compliance with the effluent limitations contained in section IV of this Order will be determined as specified below:

A. Compliance with Average Monthly Effluent Limitation

If the average of daily discharges over a calendar month exceeds the average monthly effluent limitation (AMEL) for a given parameter, an alleged violation will be flagged and the Discharger will be considered out of compliance for each day of that month for that parameter (e.g., resulting in 31 days of noncompliance in a 31-day month). The average of daily discharges over the calendar month that exceeds the AMEL for a parameter will be considered out of compliance for the month only. If only a single sample is taken during the calendar month and the analytical result for that sample exceeds the AMEL, the Discharger will be considered out of compliance for that calendar month. For any one calendar month during which no sample (daily discharge) is taken, no compliance determination can be made for that calendar month.

B. **Compliance with Average Weekly Effluent Limitation**

If the average of daily discharges over a calendar week (Sunday through Saturday) exceeds the average weekly effluent limitation (AWEL) for a given parameter, an alleged violation will be flagged and the Discharger will be considered out of compliance for each day of that week for that parameter, resulting in 7 days of noncompliance. The average of daily discharges over the calendar week that exceeds the AWEL for a parameter will be considered out of compliance for that week only. If only a single sample is taken during the calendar week and the analytical result for that sample exceeds the AWEL, the Discharger will be considered out of compliance for that calendar week. For any one calendar week during which no sample (daily discharge) is taken, no compliance determination can be made for that calendar week.

C. **Compliance with Maximum Daily Effluent Limitation**

The maximum daily effluent limitation (MDEL) shall apply to flow weighted 24-hour composite samples, or grab samples, as specified in the MRP (Attachment E). If a daily discharge exceeds the MDEL for a given parameter, an alleged violation will be flagged and the Discharger will be considered out of compliance for that parameter for that one day only within the reporting period. For any one day during which no sample is taken, no compliance determination can be made for that day.

D. **Compliance with Instantaneous Minimum Effluent Limitation**

The instantaneous minimum effluent concentration limitation shall apply to grab sample analytical results. If the analytical result of a single grab sample is lower than the instantaneous minimum effluent limitation for a parameter, a violation will be flagged and the Discharger will be considered out of compliance for that parameter for that single sample. Non-compliance for each sample will be considered separately (e.g., the results of two grab samples taken within a calendar day that are both lower than the instantaneous minimum effluent limitation would result in two instances of noncompliance with the instantaneous minimum effluent limitation.)

E. **Compliance with Instantaneous Maximum Effluent Limitation**

The instantaneous maximum effluent concentration limitation shall apply to grab sample determinations. If the analytical result of a single grab sample is higher than the instantaneous maximum effluent limitation for a parameter, a violation will be flagged and the Discharger will be considered out of compliance for that parameter for that single sample. Non-compliance for each sample will be considered separately (e.g., the results of two grab samples taken within a calendar day that both exceed the instantaneous maximum effluent limitation would result in two instances of noncompliance with the instantaneous maximum effluent limitation).

F. **Compliance with 6-Month Median Effluent Limitation**

If the median concentration of daily discharges over any 180-day period exceeds the 6-month median effluent limitation for a given parameter, an alleged violation will be flagged and the Discharger will be considered out of compliance for each day of that 180-day period for that parameter. The next assessment of compliance will occur after the next sample is taken. If only a single sample is taken during a given 180-day period and the analytical result for that sample exceeds the 6-month median, the Discharger will be considered out of compliance for the 180-day period. For any 180-day period during which no sample is taken, no compliance determination can be made for the 6-month median limitation.

G. Compliance with 30-Day Average Effluent Limitation

If the arithmetic mean of daily discharges over any thirty consecutive day period exceeds the 30-day average effluent limitation, an alleged violation will be flagged and the Discharger will be considered out of compliance for each day of that 30-day period for that parameter. The next assessment of compliance will occur after the next sample is taken. If only a single sample is taken during a given 30-day period and the analytical result for that sample exceeds the 30-day average effluent limitation, the Discharger will be considered out of compliance for the 30-day period. For any 30-day period during which no sample is taken, no compliance determination can be made for the 30-day average effluent limitation.

H. Mass and Concentration Limitations

Compliance with mass and concentration effluent limitations for the same parameter shall be determined separately with their respective limitations. When the concentration of a constituent in an effluent sample is determined to be "Not Detected" (ND) or "Detectable but not quantifiable" (DNQ), the corresponding mass emission rate (MER) determined from that sample concentration shall also be reported as "ND" or "DNQ".

I. Percent Removal

Compliance with percent removal requirements for average monthly percent removal of BOD5 and TSS shall be determined separately for each wastewater treatment facility discharging through an outfall. For each wastewater treatment facility, the monthly average percent removal is the average of the calculated daily discharge percent removals only for days on which the constituent concentration is monitored in both the influent and effluent of the wastewater treatment facility at the locations specified in the MRP (Attachment E) within a calendar month.

The percent removal for each day shall be calculated according to the following equation:

$$\text{Daily discharge percent removal} = \frac{\textit{Influent concentration} - \textit{Effluent concentration}}{\textit{Influent concentration}} \times 100\%$$

J. Ocean Plan Provisions for Table 1 Parameters

Sufficient sampling and analysis shall be required to determine compliance with the effluent limitations.

1. Compliance with Single-constituent Effluent Limitations

The Discharger shall be deemed out of compliance with an effluent limitation or discharge specification if the concentration of the constituent in the monitoring sample is greater than the effluent limitation or discharge specification and greater than or equal to the Minimum Level (ML).

2. Compliance with Effluent Limitations Expressed as a Sum of Several Parameters

The Discharger is out of compliance with an effluent limitation that applies to the sum of a group of chemicals (e.g., PCBs) if the sum of the individual pollutant concentrations is greater than the effluent limitation. Individual pollutants of the group will be considered to have a concentration of zero if the constituent is reported as ND or DNQ.

3. Multiple Sample Data Reduction

The concentration of the pollutant in the effluent may be estimated from the result of a single sample analysis or by a measure of central tendency (arithmetic mean, geometric mean, median, etc.) of multiple sample analyses when all sample results are quantifiable

(i.e., greater than or equal to the reported ML). When one or more sample results are reported as ND or DNQ, the central tendency concentration of the pollutant shall be the median (middle) value of the multiple samples. If, in an even number of samples, one or both of the middle values is ND or DNQ, the median will be the lower of the two middle values.

4. **Mass Emission Rate (MER)**

The MER, in pounds per day, shall be obtained from the following calculation for any calendar day:

Mass Emission Rate (lbs/day) = 8.34 x Q x C

In which Q and C are the flow rate in million gallons per day and the constituent concentration in mg/L, respectively, and 8.34 is a conversion factor (lbs/gallon of water). If a composite sample is taken, then C is the concentration measured in the composite sample and Q is the average flow rate occurring during the period over which the samples are composited.

K. Bacteriological Standards and Analysis

1. The geometric mean used for determining compliance with bacteriological standards is calculated with the following equation:

Geometric Mean = (C1 x C2 x ... x Cn)1/n

Where n is the number of days samples were collected during the period and C is the density of bacteria (colony forming units (CFU)/100 mL) found on each day of sampling.

2. For all bacterial analyses, sample dilutions should be performed so the range of values extends from 2 to 16,000 CFU. The detection methods used for each analysis shall be reported with the results of the analysis. Detection methods used for coliforms (total and fecal) shall be those listed in 40 CFR part 136 or any improved method determined by the San Diego Water Board (and approved by USEPA) to be appropriate. Detection methods used for enterococcus shall be those presented in USEPA publication USEPA 600/4-85/076, Test Methods for Escherichia coli and Enterococci in Water by Membrane Filter Procedure, listed under 40 CFR part 136, and any other method approved by the San Diego Water Board.

L. Single Operational Upset

A single operational upset (SOU) that leads to simultaneous violations or more than one pollutant parameter shall be treated as a single violation, and limits the Discharger's liability in accordance with the following conditions:

1. A SOU is broadly defined as a single unusual event that temporarily disrupts the usually satisfactory operation of a system in such a way that it results in violation of multiple pollutant parameters.
2. The Discharger may assert SOU to limit liability only for those violations which the Discharger submitted notice of the upset as required in section I.H of Attachment D.
3. For purposes outside of Water Code sections 13385(h) and (i), determination of compliance and civil liability (including any more specific definition of SOU), the requirements for the Discharger to assert the SOU limitation of liability, and the manner of counting violations, shall be in accordance with the USEPA Memorandum "Issuance of Guidance Interpreting Single Operational Upset" (September 27, 1989).

4. For purposes of Water Code sections 13385(h) and (i), determination of compliance and civil liability (including any more specific definition of SOU), the requirements for the Discharger to assert the SOU limitation of liability, and the manner of counting violations shall be in accordance with Water Code section 13385(f)(2).

M. Chronic Toxicity

Chronic toxicity is used to measure the acceptability of waters for supporting a healthy marine biota until approved methods are developed to evaluate biological response. Compliance with the chronic toxicity effluent limitation, established in section IV.A.1 of this Order for Discharge Point No. 001, shall be determined using critical life stage toxicity tests in accordance with procedures prescribed by the Ocean Plan and restated in the MRP (Attachment E). Chronic toxicity shall be expressed as Toxic Units Chronic (TUc), where:

TUc = 100 / NOEL

NOEL is the No Observed Effect Level and is expressed as the maximum percent of effluent that causes no observable effect on a test organism, as determined by the result of a critical life stage toxicity test.

N. Acute Toxicity

Acute toxicity is used to measure the acceptability of waters for supporting a healthy marine biota until approved methods are developed to evaluate biological response. Compliance with the acute toxicity effluent limitation established in section IV.A.1 of this Order for Discharge Point No. 001 shall be determined using the following formula:

TUa (Toxic Units Acute) = 100 / 96-hr LC 50

where LC 50 (percent waste giving 50 percent survival of test organisms) shall be determined by static or continuous flow bioassay techniques using standard marine test species as specified in Appendix III of the Ocean Plan. If specific identifiable substances in wastewater can be demonstrated by the Discharger to be rapidly rendered harmless upon discharge to the marine environment, but not as a result of dilution, the LC 50 may be determined after the test samples are adjusted to remove the influence of those substances.

When the Discharger cannot measure the 96-hour LC 50 due to greater than 50 percent survival of the test species in 100 percent waste, the toxicity concentration shall be calculated by the expression:

TUa = (log[100 – S])/1.7

where S is the percent survival in 100 percent waste. If S is greater than 99, TUa shall be reported as zero.

ATTACHMENT A – Abbreviations and Glossary

Part 1. – Abbreviations

Abbreviation	Definition
AMEL	Average Monthly Effluent Limitation
ASBS	Areas of Special Biological Significance
AWEL	Average Weekly Effluent Limitation
Basin Plan	Water Quality Control Plan for the San Diego Basin
Cal OES	California Office of Emergency Services
$CBOD_5$	Carbonaceous Biochemical Oxygen Demand (5-Day at 20°C)
CCR	California Code of Regulations
CESPT	Comisión Estatal de Servicios Públicos de Tijuana (or equivalent agency)
CFR	Code of Federal Regulations
CFU	Colony Forming Units
CILA	Comision Internacional de Límites y Aguas, Mexican Section of the International Boundary and Water Commission
CONAGUA	Comisión Nacional del Agua (or equivalent agency)
CWA	Clean Water Act
DEH	County of San Diego Department of Environmental Health
DDT	Dichlorodiphenyltrichloroethane
Dm	Initial Dilution
DNQ	Detected, but Not Quantified
GPS	Global Positioning System
HCH	Hexachlorocyclohexane
IBWC	International Boundary and Water Commission
IWTP	International Wastewater Treatment Plant
µg	Microgram
µg/L	Micrograms per Liter
lbs/day	Pounds per Day
LC	Lethal Concentration
LC 50	Percent Waste Giving 50 Percent Survival of Test Organisms
mg/L	Milligrams per Liter
ml/L	Milliliters per Liter
MDEL	Maximum Daily Effluent Limitation
MDL	Method Detection Limit
MGD	Million Gallons per Day
ML	Minimal Level
MPN	Most Probable Number
MRP	Monitoring and Reporting Program
MS4	Municipal Separate Storm Sewer System
ND	Not Detected
NR	Not Reported
NTU	Nephelometric Turbidity Unit
NPDES	National Pollutant Discharge Elimination System
NOEL	No Observed Effect Level

ED_002551_00000418-00047

Abbreviation	Definition
Ocean Plan	California Ocean Plan, Water Quality Control Plan Ocean Waters Of California
PAH	Polynuclear Aromatic Hydrocarbons
PCB	Polychlorinated Biphenyls
PMP	Pollutant Minimization Program
Prevention/Response Plan	Spill and Transboundary Wastewater Flow Prevention and Response Plan
PROFEPA	Procuraduría Federal de Protección al Ambiente (or equivalent agency)
RL	Reporting Level
RPA	Reasonable Potential Analysis
SABWWTP	San Antonio de los Buenos Wastewater Treatment Plant
San Diego Water Board	California Regional Water Quality Control Board, San Diego Region
SBLO	South Bay Land Outfall
SBOO	South Bay Ocean Outfall
SBWRP	South Bay Water Reclamation Plant
SCCWRP	Southern California Coastal Waters Research Project
SDUE	City of Tijuana's Secretaría de Desarrollo Urbano y Ecología (or equivalent agency)
SPA	Secretaría de Protección al Ambiente (or equivalent agency)
State Water Board	State Water Resources Control Board
STLC	Soluble Threshold Limit Concentration
TIE	Toxicity Identification Evaluation
TMDL	Total Maximum Daily Load
TRE	Toxicity Reduction Evaluation
TSS	Total Suspended Solids
TTLC	Total Threshold Limit Concentration
TUa	Toxic Units Acute
TUc	Toxic Units Chronic
USEPA	United Stated Environmental Protection Agency
USIBWC	United States Section of the International Boundary and Water Commission
U.S.	United States
WERL	USEPA Water Engineering Research Laboratory
WET	Whole Effluent Toxicity
ZID	Zone of Initial Dilution

ED_002551_00000418-00048

Part 2. – Glossary of Common Terms

30-day average
The arithmetic mean of pollutant parameter values of samples collected in a period of 30 consecutive days.

Acute Toxicity
The ability of a substance to cause severe biological harm or death soon after a single exposure or dose. The term acute toxicity also encompasses any poisonous effect resulting from a single short-term exposure to a toxic substance. The Ocean Plan determines acute toxicity through the use of the following equations.

a. Acute Toxicity (TUa)
Expressed in Toxic Units Acute (TUa)

$$TUa = \frac{100}{96\text{-hr LC 50}}$$

where:

LC 50 = Lethal Concentration 50% (see below)

When the 96-hour LC 50 cannot be measured due to greater than 50 percent survival of the test species in 100 percent waste, the toxicity concentration shall be calculated by the expression:

$$TUa = \frac{\log (100 - S)}{1.7}$$

where:

S = percentage survival in 100 percent waste. If S > 99, TUa shall be reported as zero.

b. Lethal Concentration 50% (LC 50)

LC 50 (percent waste giving 50 percent survival of test organisms) shall be determined by static or continuous flow bioassay techniques using standard marine test species as specified in Appendix III of the Ocean Plan. If specific identifiable substances in wastewater can be demonstrated by the discharger as being rapidly rendered harmless upon discharge to the marine environment, but not as a result of dilution, the LC 50 may be determined after the test samples are adjusted to remove the influence of those substances.

Anaerobically Digestible Material
Inedible kitchen grease as defined in section 19216 of the Food and Agricultural Code and food material as defined in Title 14, CCR, Division 7, Chapter 3.1, Article 1, Section 17582(a)(20).

Areas of Special Biological Significance (ASBS)
Those areas designated by the State Water Resources Control Board (State Water Board) as ocean areas requiring protection of species or biological communities to the extent that alteration of natural water quality is undesirable. All ASBS are also classified as a subset of STATE WATER QUALITY PROTECTION AREAS.

ED_002551_00000418-00049

Average Monthly Effluent Limitation (AMEL)
The highest allowable average of daily discharges over a calendar month, calculated as the sum of all daily discharges measured during a calendar month divided by the number of daily discharges measured during that month.

Average Weekly Effluent Limitation (AWEL)
The highest allowable average of daily discharges over a calendar week (Sunday through Saturday), calculated as the sum of all daily discharges measured during a calendar week divided by the number of daily discharges measured during that week.

Biosolids
Nutrient-rich organic materials resulting from the treatment of sewage sludge. When treated and processed, sewage sludge becomes biosolids which can be safely recycled and applied as fertilizer to sustainably improve and maintain productive soils and stimulate plant growth.

Bypass
The intentional diversion of waste streams from any portion of a treatment facility. (40 CFR Part 122.41(m)(1)(i).)

Chlordane
The sum of chlordane-alpha, chlordane-gamma, chlordene-alpha, chlordene-gamma, nonachlor-alpha, nonachlor-gamma, and oxychlordane.

Chronic Toxicity
The capacity of a substance to cause long-term poisonous health effects in humans, animals, fish, and other organisms. This parameter shall be used to measure the acceptability of waters for supporting a healthy marine biota until improved methods are developed to evaluate biological response. The Ocean Plan determines chronic toxicity through the use of the following equations.

a. Chronic Toxicity (TUc)
   Expressed as Toxic Units Chronic (TUc)

$$TUc = \frac{100}{NOEL}$$

b. No Observed Effect Level (NOEL)

   The NOEL is expressed as the maximum percent effluent or receiving water that causes no observable effect on a test organism, as determined by the result of a critical life stage toxicity test listed in Ocean Plan Appendix II.

Chlorinated phenolic compounds
The sum of 4-chloro-3-methylphenol, 2-chlorophenol, pentachlorophenol, 2,4,5-trichlorophenol, and 2,4,6-trichlorophenol.

ED_002551_00000418-00050

Daily Discharge
Daily Discharge is defined as either: (1) the total mass of the constituent discharged over the calendar day (12:00 am through 11:59 pm) or any 24-hour period that reasonably represents a calendar day for purposes of sampling (as specified in the permit), for a constituent with limitations expressed in units of mass or; (2) the unweighted arithmetic mean measurement of the constituent over the day for a constituent with limitations expressed in other units of measurement (e.g., concentration).

The daily discharge may be determined by the analytical results of a composite sample taken over the course of one day (a calendar day or other 24-hour period defined as a day) or by the arithmetic mean of analytical results from one or more grab samples taken over the course of the day.

For composite sampling, if 1 day is defined as a 24-hour period other than a calendar day, the analytical result for the 24-hour period will be considered as the result for the calendar day in which the 24-hour period ends.

DDT
The sum of 4,4'DDT, 2,4'DDT, 4,4'DDE, 2,4'DDE, 4,4'DDD, and 2,4'DDD.

Degrade
Degradation shall be determined by comparison of the waste field and reference site(s) for characteristic species diversity, population density, contamination, growth anomalies, debility, or supplanting of normal species by undesirable plant and animal species. Degradation occurs if there are significant differences in any of three major biotic groups, namely, demersal fish, benthic invertebrates, or attached algae. Other groups may be evaluated where benthic species are not affected, or are not the only ones affected.

Detected, but Not Quantified (DNQ)
Sample results that are less than the reported Minimum Level, but greater than or equal to the laboratory's MDL. Sample results reported as DNQ are estimated concentrations.

Dichlorobenzenes
The sum of 1,2- and 1,3-dichlorobenzene.

Downstream Ocean Waters
Waters downstream with respect to ocean currents.

Dredged Material
Any material excavated or dredged from the navigable waters of the United States, including material otherwise referred to as "spoil."

Dry Weather
Weather is considered dry if the preceding 72 hours have been without precipitation greater than 0.1 inch (>0.1 inch), based on the Goat Canyon Pump Station rain gauge.

Enclosed Bays
Indentations along the coast that enclose an area of oceanic water within distinct headlands or harbor works. Enclosed bays include all bays where the narrowest distance between headlands or outermost harbor works is less than 75 percent of the greatest dimension of the enclosed portion of the bay. This definition includes but is not limited to: Humboldt Bay, Bodega Harbor, Tomales Bay, Drakes Estero, San Francisco Bay, Morro Bay, Los Angeles Harbor, Upper and Lower Newport Bay, Mission Bay, and San Diego Bay.

ED_002551_00000418-00051

Endosulfan
The sum of endosulfan-alpha and -beta and endosulfan sulfate.

Estuaries and Coastal Lagoons
Estuaries and Coastal Lagoons are waters at the mouths of streams that serve as mixing zones for fresh and ocean waters during a major portion of the year. Mouths of streams that are temporarily separated from the ocean by sandbars shall be considered as estuaries. Estuarine waters will generally be considered to extend from a bay or the open ocean to the upstream limit of tidal action but may be considered to extend seaward if significant mixing of fresh and salt water occurs in the open coastal waters. The waters described by this definition include but are not limited to the Sacramento-San Joaquin Delta as defined by of Water Code section 12220, Suisun Bay, Carquinez Strait downstream to Carquinez Bridge, and appropriate areas of the Smith, Klamath, Mad, Eel, Noyo, and Russian Rivers.

Facility
South Bay International Wastewater Treatment Plant.

Facilities
South Bay International Wastewater Treatment Plant, five canyon collectors, two pump stations, the South Bay Land Outfall (SBLO), the South Bay Ocean Outfall (SBOO), and other associated infrastructure

Halomethanes
The sum of bromoform, bromomethane (methyl bromide) and chloromethane (methyl chloride).

HCH
The sum of the alpha, beta, gamma (lindane) and delta isomers of hexachlorocyclohexane.

Initial Dilution (Dm)
The process that results in the rapid and irreversible turbulent mixing of wastewater with ocean water around the point of discharge.

For a submerged buoyant discharge, characteristic of most municipal and industrial wastes that are released from the submarine outfalls, the momentum of the discharge and its initial buoyancy act together to produce turbulent mixing. Initial dilution in this case is completed when the diluting wastewater ceases to rise in the water column and first begins to spread horizontally.

For shallow water submerged discharges, surface discharges, and non-buoyant discharges, characteristic of cooling water wastes and some individual discharges, turbulent mixing results primarily from the momentum of discharge. Initial dilution, in these cases, is considered to be completed when the momentum induced velocity of the discharge ceases to produce significant mixing of the waste, or the diluting plume reaches a fixed distance from the discharge to be specified by the San Diego Water Board, whichever results in the lower estimate for initial dilution.

Instantaneous Maximum Effluent Limitation
The highest allowable value for any single grab sample or aliquot (i.e., each grab sample or aliquot is independently compared to the instantaneous maximum limitation).

Instantaneous Minimum Effluent Limitation
The lowest allowable value for any single grab sample or aliquot (i.e., each grab sample or aliquot is independently compared to the instantaneous minimum limitation).

ED_002551_00000418-00052

Interference
A discharge which, alone or in conjunction with a discharge or discharges from other sources, both:

(1) Inhibits or disrupts the POTW, its treatment processes or operations, or its sludge processes, use or disposal; and

(2) Therefore is a cause of a violation of any requirement of the POTW's NPDES permit (including an increase in the magnitude or duration of a violation) or of the prevention of sewage sludge use or disposal in compliance with the following statutory provisions and regulations or permits issued thereunder (or more stringent State or local regulations): Section 405 of the Clean Water Act, the Solid Waste Disposal Act (SWDA) (including title II, more commonly referred to as the Resource Conservation and Recovery Act (RCRA), and including State regulations contained in any State sludge management plan prepared pursuant to subtitle D of the SWDA), the Clean Air Act, the Toxic Substances Control Act, and the Marine Protection, Research and Sanctuaries Act.

Kelp Beds
For purposes of the bacteriological standards of the Ocean Plan, kelp beds are significant aggregations of marine algae of the genera Macrocystis and Nereocystis. Kelp beds include the total foliage canopy of Macrocystis and Nereocystis plants throughout the water column.

Litter
Encompasses all improperly discarded waste material, including, but not limited to convenience food, beverage, and other product packages, or containers constructed of steel, aluminum, glass, paper, plastic, and other natural and synthetic materials, thrown or deposited on the lands and waters of the State.

Mariculture
The culture of plants and animals in marine waters independent of any pollution source.

Material
(a) In common usage: (1) the substance or substances of which a thing is made or composed (2) substantial; (b) For purposes of the Ocean Plan relating to waste disposal, dredging and the disposal of dredged material and fill, MATERIAL means matter of any kind or description which is subject to regulation as waste, or any material dredged from the navigable waters of the United States. See also, DREDGED MATERIAL.

Maximum Daily Effluent Limitation (MDEL)
The highest allowable daily discharge of a pollutant.

Method Detection Limit (MDL)
The minimum concentration of a substance that can be measured and reported with 99 percent confidence that the analyte concentration is greater than zero, as defined in 40 CFR part 136, Attachment B.

Minimum Level (ML)
The concentration at which the entire analytical system must give a recognizable signal and acceptable calibration point. The ML is the concentration in a sample that is equivalent to the concentration of the lowest calibration standard analyzed by a specific analytical procedure, assuming that all the method specified sample weights, volumes, and processing steps have been followed.

Natural Light
Reduction of natural light may be determined by the San Diego Water Board by measurement of light transmissivity or total irradiance, or both, according to the monitoring needs of the San Diego Water Board.

Not Detected (ND)
Those sample results less than the laboratory's MDL.

Ocean Waters
The territorial marine waters of the state as defined by California law to the extent these waters are outside of enclosed bays, estuaries, and coastal lagoons. If a discharge outside the territorial waters of the state could affect the quality of the waters of the state, the discharge may be regulated to assure no violation of the Ocean Plan will occur in ocean waters.

Pass Through
A discharge which exits the POTW into waters of the United States in quantities or concentrations which, alone or in conjunction with a discharge or discharges from other sources, is a cause of a violation of any requirement of the POTW's NPDES permit (including an increase in the magnitude or duration of a violation.

Percent Removal
A percentage expression of the removal efficiency across a treatment plant for a given pollutant parameter, as determined from the average values of the raw wastewater influent pollutant concentrations to the facility and the average values of the effluent pollutant concentrations for a given time period.

Polynuclear Aromatic Hydrocarbons (PAHs)
The sum of acenaphthylene, anthracene, 1,2-benzanthracene, 3,4-benzofluoranthene, benzo[k]fluoranthene, 1,12-benzoperylene, benzo[a]pyrene, chrysene, dibenzo[ah]anthracene, fluorene, indeno[1,2,3-cd]pyrene, phenanthrene and pyrene.

Polychlorinated Biphenyls (PCBs)
The sum of chlorinated biphenyls whose analytical characteristics resemble those of Aroclor-1016, Aroclor-1221, Aroclor-1232, Aroclor-1242, Aroclor-1248, Aroclor-1254 and Aroclor-1260.

Phenolic Compounds (non-chlorinated)
The sum of 2,4-dimethylphenol, 4,6-Dinitro-2-methylphenol, 2,3-dinitrophenol, 2-methylphenol, 4-methylphenol, 2-nitropheneol, 4-nitrophenol, and phenol.

Pollutant Minimization Program (PMP)
PMP means waste minimization and pollution prevention actions that include, but are not limited to, product substitution, waste stream recycling, alternative waste management methods, and education of the public and businesses. The goal of the PMP shall be to reduce all potential sources of Ocean Plan Table 1 pollutants through pollutant minimization (control) strategies, including pollution prevention measures as appropriate, to maintain the effluent concentration at or below the water quality-based effluent limitation. Pollution prevention measures may be particularly appropriate for persistent bioaccumulative priority pollutants where there is evidence that beneficial uses are being impacted. The San Diego Water Board may consider cost effectiveness when establishing the requirements of a PMP. The completion and implementation of a Pollution Prevention Plan, if required pursuant to Water Code section 13263.3(d), shall be considered to fulfill the PMP requirements.

ED_002551_00000418-00054

Rehabilitation
Repair, renewal, and replacement of components to return the system to near-original condition and performance

Reported Minimum Level (also known as the Reporting Level or RL)
The reported ML (also known as the Reporting Level or RL) is the ML (and its associated analytical method) chosen by the Discharger for reporting and compliance determination from the MLs included in this Order, including an additional factor if applicable as discussed herein. The MLs included in this Order correspond to approved analytical methods for reporting a sample result that are selected by the San Diego Water Board either from Appendix II of the Ocean Plan in accordance with section III.C.5.a of the Ocean Plan, or established in accordance with section III.C.5.b of the Ocean Plan. The ML is based on the proper application of method-based analytical procedures for sample preparation and the absence of any matrix interferences. Other factors may be applied to the ML depending on the specific sample preparation steps employed. For example, the treatment typically applied in cases where there are matrix-effects is to dilute the sample or sample aliquot by a factor of ten. In such cases, thditional factor must be applied to the ML in the computation of the reported ML.

Severe Property Damage
Substantial physical damage to property, damage to the treatment facilities, which causes them to become inoperable, or substantial and permanent loss of natural resources that can reasonably be expected to occur in the absence of a bypass. Severe property damage does not mean economic loss caused by delays in production. (40 CFR Part 122.41(m)(1)(ii))

Shellfish
Organisms identified by the California Department of Health Services as shellfish for public health purposes (i.e., mussels, clams, and oysters).

Significant Difference
A statistically significant difference in the means of two distributions of sampling results at the 95 percent confidence level.

Six-Month Median Effluent Limitation
The highest allowable moving median of all daily discharges for any 180-day period.

Sludge
Any solid, semisolid, or liquid waste generated from a municipal, commercial, or industrial wastewater treatment plant, water supply treatment plant, or air pollution control facility or any other such waste having similar characteristics and effect.

State Water Quality Protection Areas (SWQPAs)
Non-terrestrial marine or estuarine areas designated to protect marine species or biological communities from an undesirable alteration in natural water quality. All AREAS OF SPECIAL BIOLOGICAL SIGNIFICANCE (ASBS) that were previously designated by the State Water Board in Resolution Nos. 74-28, 74-32, and 75-61 are now also classified as a subset of State Water Quality Protection Areas and require special protections afforded by the Ocean Plan.

ED_002551_00000418-00055

TCDD Equivalents
The sum of the concentrations of chlorinated dibenzodioxins (2,3,7,8-CDDs) and chlorinated dibenzofurans (2,3,7,8-CDFs) multiplied by their respective toxicity factors, as shown in the table below.

Isomer Group	Toxicity Equivalence Factor
2,3,7,8-tetra CDD	1.0
2,3,7,8-penta CDD	0.5
2,3,7,8-hexa CDDs	0.1
2,3,7,8-hepta CDD	0.01
octa CDD	0.001
2,3,7,8 tetra CDF	0.1
1,2,3,7,8 penta CDF	0.05
2,3,4,7,8 penta CDF	0.5
2,3,7,8 hexa CDFs	0.1
2,3,7,8 hepta CDFs	0.01
octa CDF	0.001

Thirty-Day Average
See 30-day average above for definition of this term.

Toxicity Identification Evaluation (TIE)
A set of procedures conducted to identify the specific chemical(s) responsible for toxicity. These procedures are performed in three phases (characterization, identification, and confirmation) using aquatic organism toxicity tests.)

Toxicity Reduction Evaluation (TRE)
A study conducted in a step-wise process designed to identify the causative agents of effluent or ambient toxicity, isolate the sources of toxicity, evaluate the effectiveness of toxicity control options, and then confirm the reduction in toxicity. The first steps of the TRE consist of the collection of data relevant to the toxicity, including additional toxicity testing, and an evaluation of facility operations and maintenance practices, and best management practices. A Toxicity Identification Evaluation (TIE) may be required as part of the TRE, if appropriate. (A TIE is a set of procedures to identify the specific chemical(s) responsible for toxicity. These procedures are performed in three phases (characterization, identification, and confirmation) using aquatic organism toxicity tests.)

Transboundary Flows
Wastewater and other flows that cross the international border from Mexico into the United States.

Waste
As used in the Ocean Plan, waste includes a Discharger's total discharge, of whatever origin, i.e., gross, not net, discharge.

ED_002551_00000418-00056

Water Recycling
The treatment of wastewater to render it suitable for reuse, the transportation of treated wastewater to the place of use, and the actual use of treated wastewater for a direct beneficial use or controlled use that would not otherwise occur.

Wet Weather
Wet weather is the period of time of a storm event of 0.1 inches or greater plus 72 hours after cessation of precipitation, based on the Goat Canyon Pump Station rain gauge, unless otherwise defined by another regulatory mechanism (e.g. a TMDL).

ED_002551_00000418-00057

ATTACHMENT B – MAP

Map of the South Bay International Wastewater Treatment Plant, South Bay Ocean Outfall, Tijuana River, and Tributary Canyons

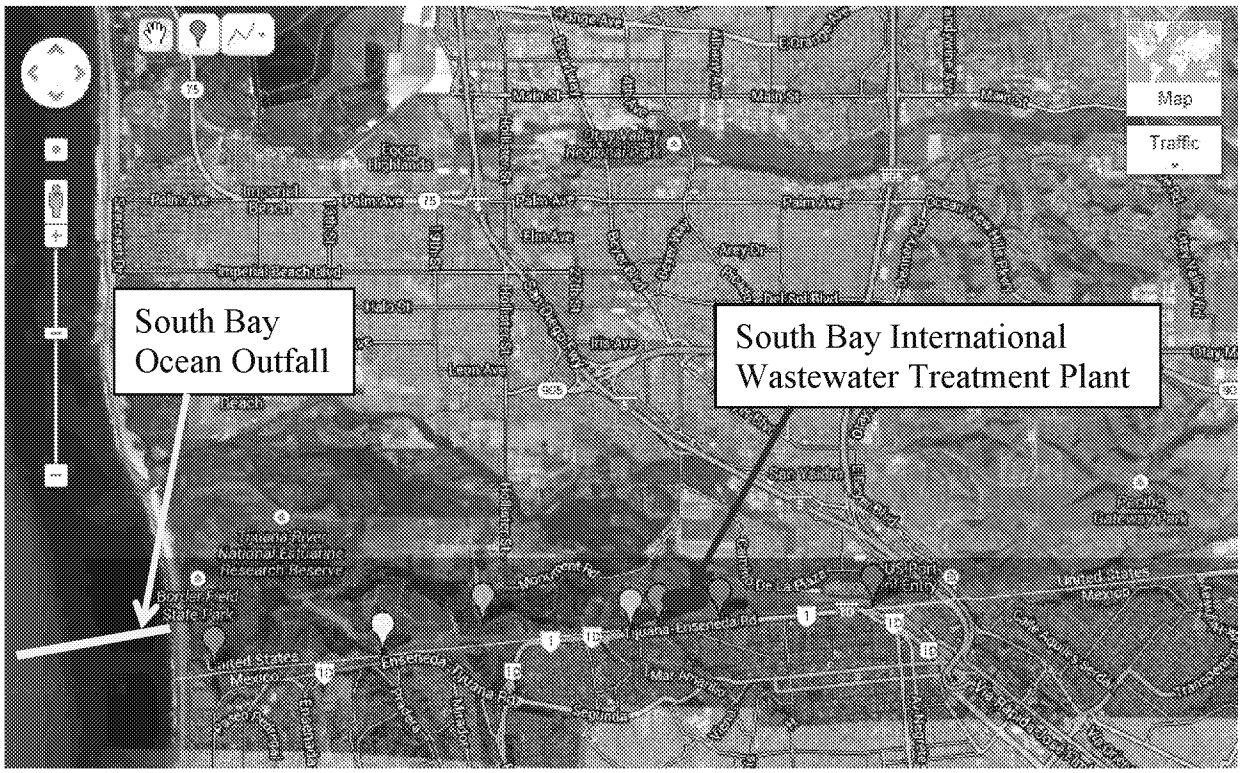

- Stewart's Drain Canyon Collector Inlet
- Canyon del Sol Collector
- Silva Drain Canyon Collector
- Smuggler's Gulch Canyon Collector
- Yogurt Canyon - no diversion structure
- Goat Canyon Collector
- Tijuana River

Map of Shoreline, Offshore, Trawl, and Rig Fishing Stations

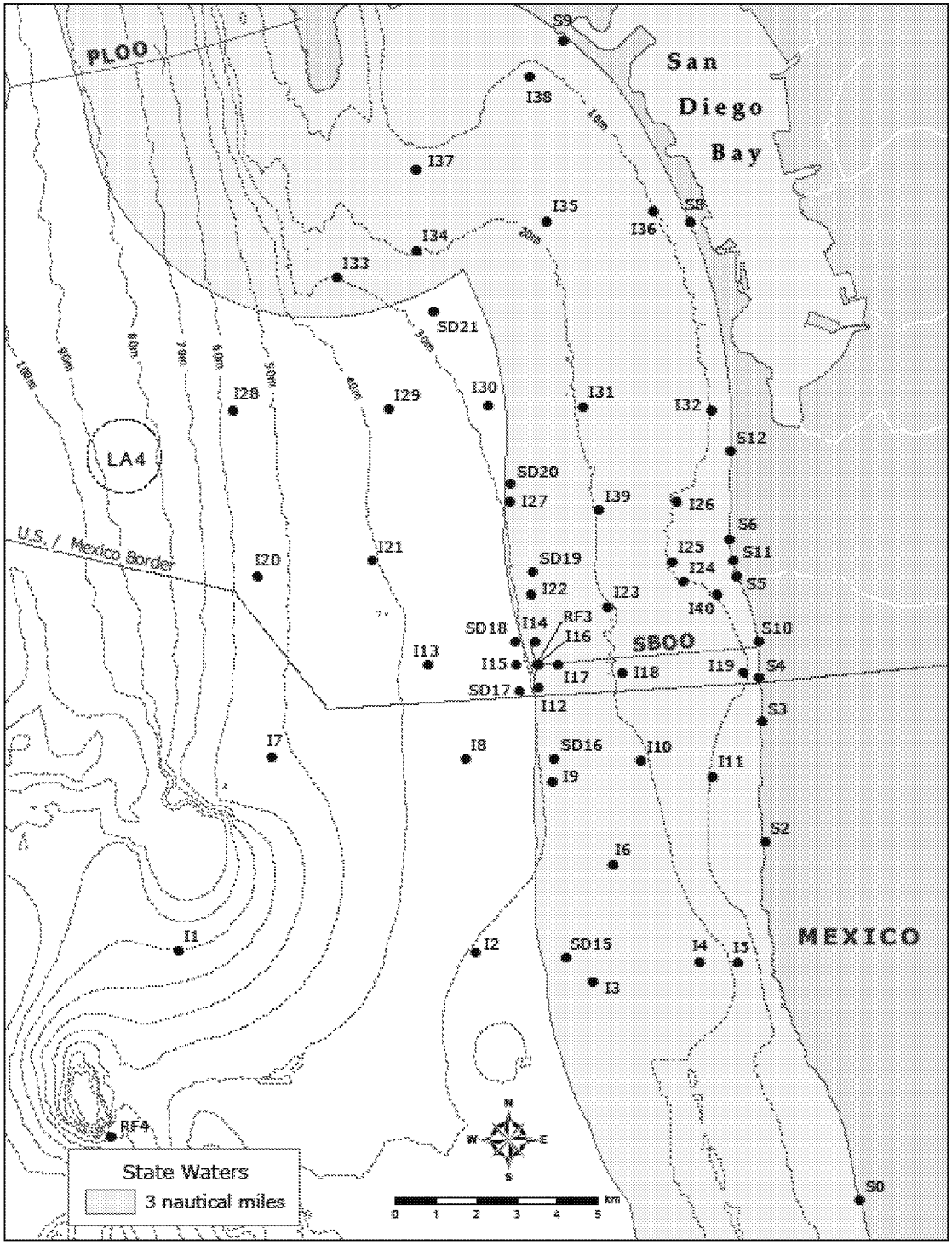

ATTACHMENT C – FLOW SCHEMATIC

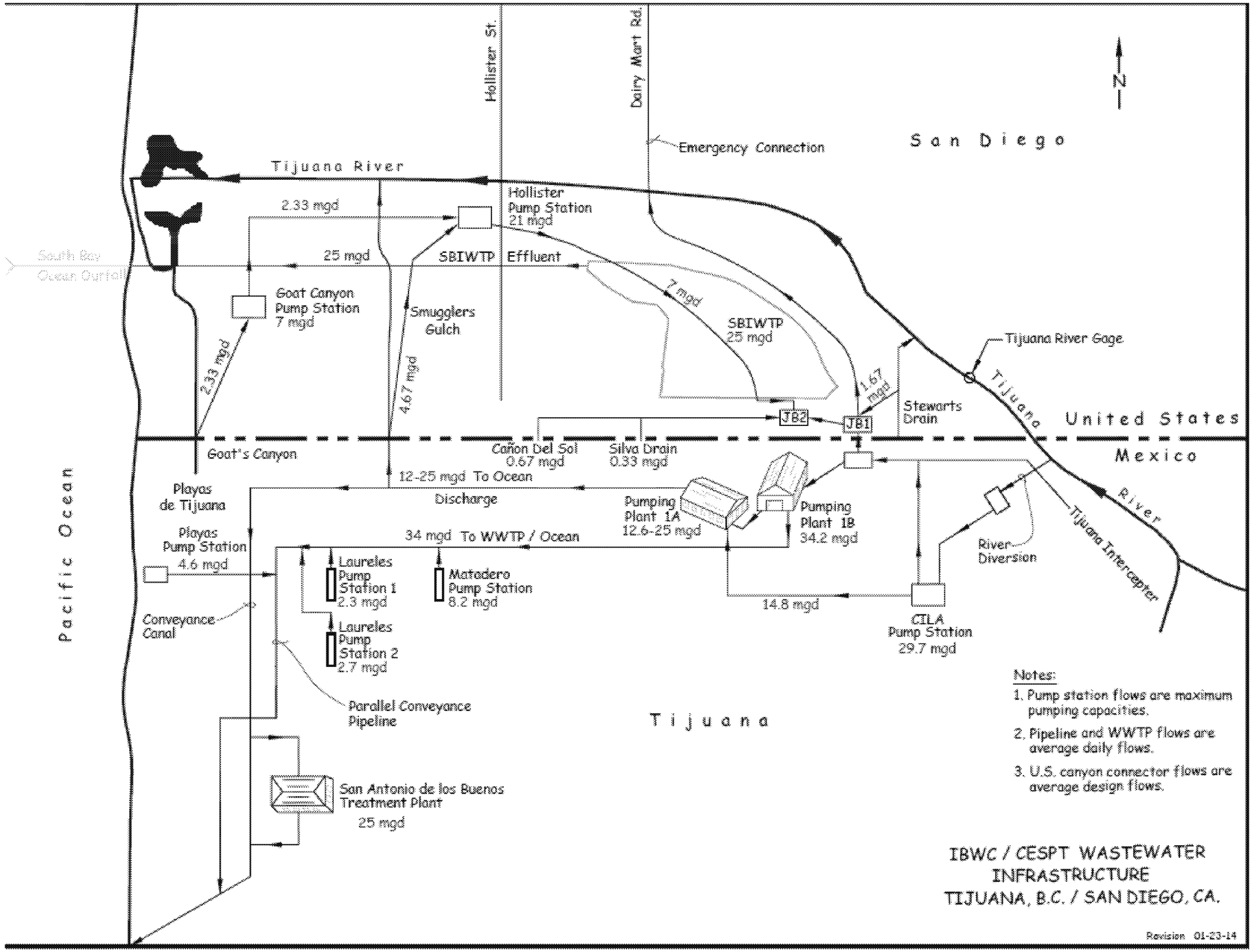

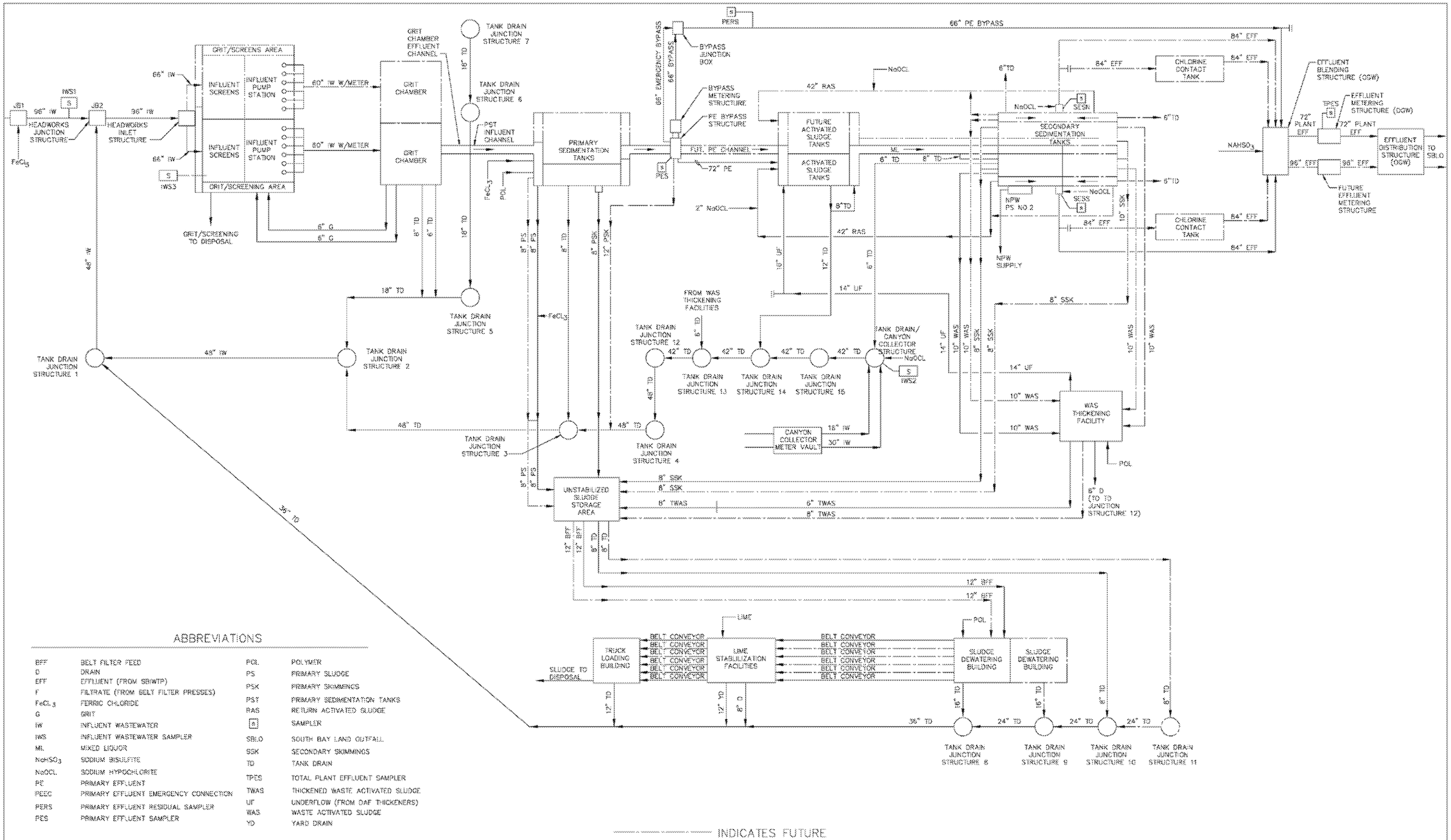

ABBREVIATIONS

BFF	BELT FILTER FEED	POL	POLYMER
D	DRAIN	PS	PRIMARY SLUDGE
EFF	EFFLUENT (FROM SBIWTP)	PSK	PRIMARY SKIMMINGS
F	FILTRATE (FROM BELT FILTER PRESSES)	PST	PRIMARY SEDIMENTATION TANKS
$FeCL_3$	FERRIC CHLORIDE	RAS	RETURN ACTIVATED SLUDGE
G	GRIT	[S]	SAMPLER
IW	INFLUENT WASTEWATER	SBLO	SOUTH BAY LAND OUTFALL
IWS	INFLUENT WASTEWATER SAMPLER	SSK	SECONDARY SKIMMINGS
ML	MIXED LIQUOR	TD	TANK DRAIN
$NaHSO_3$	SODIUM BISULFITE	TPES	TOTAL PLANT EFFLUENT SAMPLER
NaOCL	SODIUM HYPOCHLORITE	TWAS	THICKENED WASTE ACTIVATED SLUDGE
PE	PRIMARY EFFLUENT	UF	UNDERFLOW (FROM DAF THICKENERS)
PEEC	PRIMARY EFFLUENT EMERGENCY CONNECTION	WAS	WASTE ACTIVATED SLUDGE
PERS	PRIMARY EFFLUENT RESIDUAL SAMPLER	YD	YARD DRAIN
PES	PRIMARY EFFLUENT SAMPLER		

ATTACHMENT D – STANDARD PROVISIONS

I. STANDARD PROVISIONS – PERMIT COMPLIANCE

A. Duty to Comply

1. The Discharger must comply with all of the conditions of this Order. Any noncompliance constitutes a violation of the Clean Water Act (CWA) and the California Water Code and is grounds for enforcement action, for permit termination, revocation and reissuance, or modification; or denial of a permit renewal application. (40 CFR section 122.41(a).)
2. The Discharger shall comply with effluent standards or prohibitions established under section 307(a) of the CWA for toxic pollutants and with standards for sewage sludge use or disposal established under section 405(d) of the CWA within the time provided in the regulations that establish these standards or prohibitions, even if this Order has not yet been modified to incorporate the requirement. (40 CFR section 122.41(a)(1).)

B. Need to Halt or Reduce Activity Not a Defense

The Discharger shall not use as a defense in an enforcement action that halting or reducing the permitted activity would have been necessary in order to maintain compliance. (40 CFR section 122.41(c).)

C. Duty to Mitigate

The Discharger shall take all reasonable steps to minimize or prevent any discharge, or sludge use or disposal in violation of this Order that has a reasonable likelihood of adversely affecting human health or the environment. (40 CFR section 122.41(d).)

D. Proper Operation and Maintenance

The Discharger shall at all times properly operate and maintain all facilities and systems of treatment and control (and related appurtenances) which are installed or used by the Discharger to achieve compliance with the conditions of this Order. Proper operation and maintenance also includes adequate laboratory controls and appropriate quality assurance procedures. This provision requires the operation of backup or auxiliary facilities or similar systems that are installed by a Discharger only when necessary to achieve compliance with the conditions of this Order. (40 CFR section 122.41(e).)

E. Property Rights

1. This Order does not convey any property rights of any sort, or any exclusive privileges. (40 CFR section 122.41(g).)
2. The issuance of this Order does not authorize any injury to persons or property, or invasion of other private rights, or any infringement of state or local law or regulations. (40 CFR section 122.5(c).)

F. Inspection and Entry

The Discharger shall allow the San Diego Water Board, State Water Board, USEPA, and/or their authorized representatives (including an authorized contractor acting as their representative), upon the presentation of credentials and other documents, as may be required by law, to (40 CFR section 122.41(i); Water Code section 13383):

1. Enter upon the Discharger's premises where a regulated facility or activity is located or conducted, or where records are kept under the conditions of this Order (40 CFR section 122.41(i)(1));

ED_002551_00000418-00062

2. Have access to and copy, at reasonable times, any records that must be kept under the conditions of this Order (40 CFR section 122.41(i)(2));
3. Inspect and photograph, at reasonable times, any facilities, equipment (including monitoring and control equipment), practices, or operations regulated or required under this Order (40 CFR section 122.41(i)(3)); and
4. Sample or monitor, at reasonable times, for the purposes of assuring Order compliance or as otherwise authorized by the CWA or the Water Code, any substances or parameters at any location. (40 CFR section 122.41(i)(4).)

G. Bypass

1. Definitions
   a. "Bypass" means the intentional diversion of waste streams from any portion of a treatment facility. (40 CFR section 122.41(m)(1)(i).)
   b. "Severe property damage" means substantial physical damage to property, damage to the treatment facilities, which causes them to become inoperable, or substantial and permanent loss of natural resources that can reasonably be expected to occur in the absence of a bypass. Severe property damage does not mean economic loss caused by delays in production. (40 CFR section 122.41(m)(1)(ii).)
2. Bypass not exceeding limitations. The Discharger may allow any bypass to occur which does not cause exceedances of effluent limitations, but only if it is for essential maintenance to assure efficient operation. These bypasses are not subject to the provisions listed in Standard Provisions – Permit Compliance I.G.3, I.G.4, and I.G.5 below. (40 CFR section 122.41(m)(2).)
3. Prohibition of bypass. Bypass is prohibited, and the San Diego Water Board may take enforcement action against a Discharger for bypass, unless (40 CFR section 122.41(m)(4)(i)):
   a. Bypass was unavoidable to prevent loss of life, personal injury, or severe property damage (40 CFR section 122.41(m)(4)(i)(A));
   b. There were no feasible alternatives to the bypass, such as the use of auxiliary treatment facilities, retention of untreated wastes, or maintenance during normal periods of equipment downtime. This condition is not satisfied if adequate back-up equipment should have been installed in the exercise of reasonable engineering judgment to prevent a bypass that occurred during normal periods of equipment downtime or preventive maintenance (40 CFR section 122.41(m)(4)(i)(B)); and
   c. The Discharger submitted notice to the San Diego Water Board as required under Standard Provisions – Permit Compliance I.G.5 below. (40 CFR section 122.41(m)(4)(i)(C).)
4. The San Diego Water Board may approve an anticipated bypass, after considering its adverse effects, if the San Diego Water Board determines that it will meet the three conditions listed in Standard Provisions – Permit Compliance I.G.3 above. (40 CFR section 122.41(m)(4)(ii).)
5. Notice
   a. Anticipated bypass. If the Discharger knows in advance of the need for a bypass, it shall submit a notice, if possible at least 10 days before the date of the bypass. (40 CFR section 122.41(m)(3)(i).)

ED_002551_00000418-00063

b. Unanticipated bypass. The Discharger shall submit notice of an unanticipated bypass as required in Standard Provisions - Reporting V.E below (24-hour notice). (40 CFR section 122.41(m)(3)(ii).)

H. Upset

Upset means an exceptional incident in which there is unintentional and temporary noncompliance with technology based permit effluent limitations because of factors beyond the reasonable control of the Discharger. An upset does not include noncompliance to the extent caused by operational error, improperly designed treatment facilities, inadequate treatment facilities, lack of preventive maintenance, or careless or improper operation. (40 CFR section 122.41(n)(1).)

1. Effect of an upset. An upset constitutes an affirmative defense to an action brought for noncompliance with such technology based permit effluent limitations if the requirements of Standard Provisions – Permit Compliance I.H.2 below are met. No determination made during administrative review of claims that noncompliance was caused by upset, and before an action for noncompliance, is final administrative action subject to judicial review. (40 CFR section 122.41(n)(2).)
2. Conditions necessary for a demonstration of upset. A Discharger who wishes to establish the affirmative defense of upset shall demonstrate, through properly signed, contemporaneous operating logs or other relevant evidence that (40 CFR section 122.41(n)(3)):
   a. An upset occurred and that the Discharger can identify the cause(s) of the upset (40 CFR section 122.41(n)(3)(i));
   b. The permitted facility was, at the time, being properly operated (40 CFR section 122.41(n)(3)(ii));
   c. The Discharger submitted notice of the upset as required in Standard Provisions – Reporting V.E.2.b below (24-hour notice) (40 CFR section 122.41(n)(3)(iii)); and
   d. The Discharger complied with any remedial measures required under Standard Provisions – Permit Compliance I.C above. (40 CFR section 122.41(n)(3)(iv).)
3. Burden of proof. In any enforcement proceeding, the Discharger seeking to establish the occurrence of an upset has the burden of proof. (40 CFR section 122.41(n)(4).)

ED_002551_00000418-00064

II. STANDARD PROVISIONS – PERMIT ACTION

A. General

This Order may be modified, revoked and reissued, or terminated for cause. The filing of a request by the Discharger for modification, revocation and reissuance, or termination, or a notification of planned changes or anticipated noncompliance does not stay any Order condition. (40 CFR section 122.41(f).)

B. Duty to Reapply

If the Discharger wishes to continue an activity regulated by this Order after the expiration date of this Order, the Discharger must apply for and obtain a new permit. (40 CFR section 122.41(b).)

C. Transfers

This Order is not transferable to any person except after notice to the San Diego Water Board. The San Diego Water Board may require modification or revocation and reissuance of the Order to change the name of the Discharger and incorporate such other requirements as may be necessary under the CWA and the Water Code. (40 CFR sections 122.41(l)(3) and 122.61.)

III. STANDARD PROVISIONS – MONITORING

A. Samples and measurements taken for the purpose of monitoring shall be representative of the monitored activity. (40 CFR section 122.41(j)(1).)

B. Monitoring must be conducted according to test procedures under 40 CFR part 136 or, in the case of sludge use or disposal, approved under 40 CFR part 136 unless otherwise specified in 40 CFR part 503; or unless other test procedures have been specified in this Order. (40 CFR sections 122.41(j)(4) and 122.44(i)(1)(iv).)

IV. STANDARD PROVISIONS – RECORDS

A. Except for records of monitoring information required by this Order related to the Discharger's sewage sludge use and disposal activities, which shall be retained for a period of at least five years (or longer as required by 40 CFR part 503), the Discharger shall retain records of all monitoring information, including all calibration and maintenance records and all original strip chart recordings for continuous monitoring instrumentation, copies of all reports required by this Order, and records of all data used to complete the application for this Order, for a period of at least three (3) years from the date of the sample, measurement, report or application. This period may be extended by request of the San Diego Water Board Executive Officer at any time. (40 CFR section 122.41(j)(2).)

B. **Records of monitoring information shall include:**

1. The date, exact place, and time of sampling or measurements (40 CFR section 122.41(j)(3)(i));
2. The individual(s) who performed the sampling or measurements (40 CFR section 122.41(j)(3)(ii));
3. The date(s) analyses were performed (40 CFR section 122.41(j)(3)(iii));
4. The individual(s) who performed the analyses (40 CFR section 122.41(j)(3)(iv));
5. The analytical techniques or methods used (40 CFR section 122.41(j)(3)(v)); and
6. The results of such analyses. (40 CFR section 122.41(j)(3)(vi).)

ED_002551_00000418-00065

C. **Claims of confidentiality for the following information will be denied (40 CFR section 122.7(b)):**

1. The name and address of any permit applicant or Discharger (40 CFR section 122.7(b)(1)); and
2. Permit applications and attachments, permits and effluent data. (40 CFR section 122.7(b)(2).)

V. STANDARD PROVISIONS – REPORTING

A. Duty to Provide Information

The Discharger shall furnish to the San Diego Water Board, State Water Board, or USEPA within a reasonable time, any information which the San Diego Water Board, State Water Board, or USEPA may request to determine whether cause exists for modifying, revoking and reissuing, or terminating this Order, or to determine compliance with this Order. Upon request, the Discharger shall also furnish to the San Diego Water Board, State Water Board, or USEPA copies of records required to be kept by this Order. (40 CFR section 122.41(h); Water Code section 13267.)

B. Signatory and Certification Requirements

1. All applications, reports, or information submitted to the San Diego Water Board, State Water Board, and/or USEPA shall be signed and certified in accordance with Standard Provisions – Reporting V.B.2, V.B.3, V.B.4, and V.B.5 below. (40 CFR section 122.41(k).)
2. All permit applications shall be signed by either a principal executive officer or ranking elected official. For purposes of this provision, a principal executive officer of a federal agency includes: (i) the chief executive officer of the agency, or (ii) a senior executive officer having responsibility for the overall operations of a principal geographic unit of the agency (e.g., Regional Administrators of USEPA). (40 CFR section 122.22(a)(3).).
3. All reports required by this Order and other information requested by the San Diego Water Board, State Water Board, or USEPA shall be signed by a person described in Standard Provisions – Reporting V.B.2 above, or by a duly authorized representative of that person. A person is a duly authorized representative only if:
   a. The authorization is made in writing by a person described in Standard Provisions – Reporting V.B.2 above (40 CFR section 122.22(b)(1));
   b. The authorization specifies either an individual or a position having responsibility for the overall operation of the regulated facility or activity such as the position of plant manager, operator of a well or a well field, superintendent, position of equivalent responsibility, or an individual or position having overall responsibility for environmental matters for the company. (A duly authorized representative may thus be either a named individual or any individual occupying a named position.) (40 CFR section 122.22(b)(2)); and
   c. The written authorization is submitted to the San Diego Water Board and State Water Board. (40 CFR section 122.22(b)(3).)
4. If an authorization under Standard Provisions – Reporting V.B.3 above is no longer accurate because a different individual or position has responsibility for the overall operation of the facility, a new authorization satisfying the requirements of Standard Provisions – Reporting V.B.3 above must be submitted to the San Diego Water Board

ED_002551_00000418-00066

and State Water Board prior to or together with any reports, information, or applications, to be signed by an authorized representative. (40 CFR section 122.22(c).)

5. Any person signing a document under Standard Provisions – Reporting V.B.2 or V.B.3 above shall make the following certification:

   "I certify under penalty of law that this document and all attachments were prepared under my direction or supervision in accordance with a system designed to assure that qualified personnel properly gather and evaluate the information submitted. Based on my inquiry of the person or persons who manage the system or those persons directly responsible for gathering the information, the information submitted is, to the best of my knowledge and belief, true, accurate, and complete. I am aware that there are significant penalties for submitting false information, including the possibility of fine and imprisonment for knowing violations." (40 CFR section 122.22(d).)

C. Monitoring Reports

1. Monitoring results shall be reported at the intervals specified in the Monitoring and Reporting Program (Attachment E) in this Order. (40 CFR section 122.41(l)(4).)
2. Monitoring results must be reported on a Discharge Monitoring Report (DMR) form or forms provided or specified by the San Diego Water Board or State Water Board for reporting results of monitoring of sludge use or disposal practices. (40 CFR section 122.41(l)(4)(i).)
3. If the Discharger monitors any pollutant more frequently than required by this Order using test procedures approved under 40 CFR part 136, or another method required for an industry-specific waste stream under 40 CFR subchapters N or O, the results of such monitoring shall be included in the calculation and reporting of the data submitted in the DMR or sludge reporting form specified by the San Diego Water Board. (40 CFR section 122.41(l)(4)(ii).)
4. Calculations for all limitations, which require averaging of measurements, shall utilize an arithmetic mean unless otherwise specified in this Order. (40 CFR section 122.41(l)(4)(iii).)

D. Compliance Schedules

Reports of compliance or noncompliance with, or any progress reports on, interim and final requirements contained in any compliance schedule of this Order, shall be submitted no later than 14 days following each schedule date. (40 CFR section 122.41(l)(5).)

E. Twenty-Four Hour Reporting

1. The Discharger shall report any noncompliance that may endanger health or the environment. Any information shall be provided orally within 24 hours from the time the Discharger becomes aware of the circumstances. A written submission shall also be provided within five (5) days of the time the Discharger becomes aware of the circumstances. The written submission shall contain a description of the noncompliance and its cause; the period of noncompliance, including exact dates and times, and if the noncompliance has not been corrected, the anticipated time it is expected to continue; and steps taken or planned to reduce, eliminate, and prevent reoccurrence of the noncompliance. (40 CFR section 122.41(l)(6)(i).)
2. The following shall be included as information that must be reported within 24 hours under this paragraph (40 CFR section 122.41(l)(6)(ii)):

ED_002551_00000418-00067

a. Any unanticipated bypass that exceeds any effluent limitation in this Order. (40 CFR section 122.41(l)(6)(ii)(A).)

b. Any upset that exceeds any effluent limitation in this Order. (40 CFR section 122.41(l)(6)(ii)(B).)

3. The San Diego Water Board may waive the above-required written report under this provision on a case-by-case basis if an oral report has been received within 24 hours. (40 CFR section 122.41(l)(6)(iii).)

F. Planned Changes

The Discharger shall give notice to the San Diego Water Board as soon as possible of any planned physical alterations or additions to the permitted facility. Notice is required under this provision only when (40 CFR section 122.41(l)(1)):

1. The alteration or addition to a permitted facility may meet one of the criteria for determining whether a facility is a new source in part 122.29(b) (40 CFR section 122.41(l)(1)(i)); or

2. The alteration or addition could significantly change the nature or increase the quantity of pollutants discharged. This notification applies to pollutants that are not subject to effluent limitations in this Order. (40 CFR section 122.41(l)(1)(ii).)

3. The alteration or addition results in a significant change in the Discharger's sludge use or disposal practices, and such alteration, addition, or change may justify the application of permit conditions that are different from or absent in the existing permit, including notification of additional use or disposal sites not reported during the permit application process or not reported pursuant to an approved land application plan. (40 CFR section 122.41(l)(1)(iii).)

G. Anticipated Noncompliance

The Discharger shall give advance notice to the San Diego Water Board or State Water Board of any planned changes in the permitted facility or activity that may result in noncompliance with this Order's requirements. (40 CFR section 122.41(l)(2).)

H. Other Noncompliance

The Discharger shall report all instances of noncompliance not reported under Standard Provisions – Reporting V.C, V.D, and V.E above at the time monitoring reports are submitted. The reports shall contain the information listed in Standard Provision – Reporting V.E above. (40 CFR section 122.41(l)(7).)

I. Other Information

When the Discharger becomes aware that it failed to submit any relevant facts in a permit application, or submitted incorrect information in a permit application or in any report to the San Diego Water Board, State Water Board, or USEPA, the Discharger shall promptly submit such facts or information. (40 CFR section 122.41(l)(8).)

VI. STANDARD PROVISIONS – ENFORCEMENT

The San Diego Water Board is authorized to enforce the terms of this permit under several provisions of the Water Code, including, but not limited to, sections 13385, 13386, and 13387.

ED_002551_00000418-00068

VII. ADDITIONAL PROVISIONS – NOTIFICATION LEVELS

All Publicly-Owned Treatment Works (POTWs) shall provide adequate notice to the San Diego Water Board of the following (40 CFR section 122.42(b)):

1. Any new introduction of pollutants into the POTW from an indirect discharger that would be subject to sections 301 or 306 of the CWA if it were directly discharging those pollutants (40 CFR section 122.42(b)(1)); and
2. Any substantial change in the volume or character of pollutants being introduced into that POTW by a source introducing pollutants into the POTW at the time of adoption of the Order. (40 CFR section 122.42(b)(2).)
3. Adequate notice shall include information on the quality and quantity of effluent introduced into the POTW as well as any anticipated impact of the change on the quantity or quality of effluent to be discharged from the POTW. (40 CFR section 122.42(b)(3).)

ED_002551_00000418-00069

ATTACHMENT E – MONITORING AND REPORTING PROGRAM

Contents

I. General Monitoring Provisions E-3
II. Monitoring Locations E-4
III. Core Monitoring Requirements E-6
A. Influent Monitoring Requirements E-6
B. Effluent Monitoring Requirements E-9
C. Whole Effluent Toxicity Testing Requirements E-13
D. Land Discharge Monitoring Requirements – Not Applicable E-14
E. Recycling Monitoring Requirements – Not Applicable E-14
IV. Receiving Water Monitoring Requirements E-14
A. Shoreline Water Quality Monitoring Requirements E-15
B. Offshore Water Quality Monitoring Requirements E-16
C. Benthic Monitoring Requirements E-18
D. Fish and Invertebrate Monitoring Requirements E-23
E. Receiving Water Monitoring Reports E-26
V. Regional Monitoring Requirements E-28
A. Kelp Bed Canopy Monitoring Requirements E-29
B. Southern California Bight Monitoring Program Participation Requirements E-30
VI. Special Studies Requirements E-30
Compliance with Bacteriological Standards E-30
VII. Other Monitoring Requirements E-31
A. Facilities Spills E-31
B. Transboundary Wastewater Flows E-31
VIII. Reporting Requirements E-35
A. General Monitoring and Reporting Requirements E-35
B. Self-Monitoring Report (SMR) Submittal E-35
C. Discharge Monitoring Reports (DMR's) E-37
D. Other Reports E-38

Tables

Table E-1. Monitoring Station Locations E-4
Table E-2. Influent Monitoring E-7
Table E-3. Effluent Monitoring E-10
Table E-4. Whole Effluent Toxicity Testing E-13
Table E-5. Approved Test for Chronic Toxicity E-14
Table E-6. Shoreline Monitoring Requirements[2] E-15
Table E-7. Offshore and Kelp/Nearshore Monitoring Requirements E-16
Table E-8. Sediment Monitoring Requirements E-19
Table E-9. Fish Tissue Monitoring Requirements E-24
Table E-10. Spills and Transboundary Wastewater Flow Monitoring E-33
Table E-11. Monitoring Periods and Reporting Schedule E-35
Table E-12. Other Reports E-39

ED_002551_00000418-00070

ATTACHMENT E – MONITORING AND REPORTING PROGRAM (MRP)

Section 308 of the federal Clean Water Act (CWA) and sections 122.41(h), (j)-(l), 122.44(i), and 122.48 of title 40 of the Code of Federal Regulations (40 CFR) require that all National Pollutant Discharge Elimination System (NPDES) permits specify monitoring and reporting requirements. California Water Code (Water Code or CWC) sections 13267 and 13383 also authorize the San Diego Water Board to establish monitoring, inspection, entry, reporting, and recordkeeping requirements. Pursuant to this authority this Monitoring and Reporting Program (MRP) establishes conditions for the Discharger to conduct routine or episodic self-monitoring of the discharges regulated under this Order at specified influent, internal operations, effluent, transboundary wastewater flow, and receiving water monitoring locations. The MRP requires the Discharger to report the results to the San Diego Water Board with information necessary to evaluate discharge characteristics and compliance status.

The purpose of the MRP is to determine and ensure compliance with effluent limitations and other requirements established in this Order, assess treatment efficiency, characterize effluents, characterize transboundary wastewater flows, and characterize the receiving water and the effects of the discharge on the receiving water. The MRP also specifies requirements concerning the proper use, maintenance, and installation of monitoring equipment and methods, and the monitoring type intervals and frequency necessary to yield data that are representative of the activities and discharges regulated under this Order.

Each monitoring section contains an introductory paragraph summarizing why the monitoring is needed and the key management questions the monitoring is designed to answer. In developing the list of key management questions the San Diego Water Board considered four basic types of information for each question:

(1) Management Information Need – Why does the San Diego Water Board need to know the answer?

(2) Monitoring Criteria – What monitoring will be conducted for deriving an answer to the question?

(3) Expected Product – How should the answer be expressed and reported?

(4) Possible Management Actions – What actions will be potentially influenced by the answer?

The framework for this monitoring program has three components that comprise a range of spatial and temporal scales: 1. core monitoring, 2. regional monitoring, and 3. special studies.

1. Core monitoring consists of the basic site-specific monitoring necessary to measure compliance with individual effluent limits and/or impacts to receiving water quality. Core monitoring is typically conducted in the immediate vicinity of the discharge by examining local scale spatial effects.
2. Regional monitoring provides information necessary to make assessments over large areas and serves to evaluate cumulative effects of all anthropogenic inputs. Regional monitoring data also assists in the interpretation of core monitoring studies. In the event that a regional monitoring effort takes place during the permit cycle in which the MRP does not specifically address regional monitoring, the San Diego Water Board may allow relief from aspects of core monitoring components in order to encourage participation pursuant to section V.B of this MRP.
3. Special studies are directed monitoring efforts designed in response to specific management or research questions identified through either core or regional monitoring programs. Often they are used to help understand core or regional monitoring results, where a specific environmental process is not well understood, or to address unique issues of local importance.

ED_002551_00000418-00071

I. GENERAL MONITORING PROVISIONS

A. Samples and measurements taken as required herein shall be representative of the volume and nature of the monitoring discharge. All samples shall be taken at the monitoring points specified in Section II Table E-1 below and, unless otherwise specified, before the monitored flow joins or is diluted by any other waste stream, body of water, or substance. Monitoring points shall not be changed without notification to and the approval of the San Diego Water Board. Samples shall be collected at times representative of "worst case" conditions with respect to compliance with the requirement of this Order.

B. Appropriate flow measurement devices and methods consistent with accepted scientific practices shall be selected and used to ensure the accuracy and reliability of measurements of the volume of monitored discharges. The devices shall be installed, calibrated and maintained to ensure that the accuracy of the measurement is consistent with the accepted capability of that type of device. Devices selected shall be capable of measuring flows with a maximum deviation of less than ±5 percent from true discharge rates throughout the range of expected discharge volumes.

C. Monitoring must be conducted according to United States Environmental Protection Agency (USEPA) test procedures approved at 40 CFR part 136, Guidelines Establishing Test Procedures for the Analysis of Pollutants Under the Clean Water Act as amended, or unless other test procedures are specified in this Order and attachments thereof or otherwise specified by the San Diego Water Board. Alternative test procedures not specified in this order are also subject USEPA approval.

D. All analyses shall be performed in a laboratory certified to perform such analyses by the California Department of Public Health (CDPH) or a laboratory approved by the San Diego Water Board. The laboratory must be accredited under the CDPH Environmental Laboratory Accreditation Program (ELAP) to ensure the quality of analytical data used for regulatory purposes to meet the requirements of this Order. Additional information on ELAP can be accessed at http://www.cdph.ca.gov/certlic/labs/Pages/ELAP-CAInformation.aspx.

E. Records of monitoring information shall include information required under Attachment D, Standard Provisions, section IV.

F. All monitoring instruments and devices used by the Discharger to fulfill the prescribed monitoring program shall be properly maintained and calibrated as necessary to ensure their continued accuracy. All flow measurement devices shall be calibrated at least once per year, or more frequently, to ensure continued accuracy of the devices.

G. The Discharger shall have, and implement, an acceptable written quality assurance (QA) plan for laboratory analyses. Duplicate chemical analyses must be conducted on a minimum of 10 percent of the samples or at least one sample per month, whichever is greater. A similar frequency shall be maintained for analyzing spiked samples. When requested by USEPA or the San Diego Water Board, the Discharger shall participate in a NPDES discharge monitoring report QA performance study. The Discharger shall have a success rate equal to or greater than 80 percent.

H. Analysis for toxic pollutants, with effluent limitations or performance goals based on water quality objectives of the California Ocean Plan, shall be conducted in accordance with procedures described in the California Ocean Plan and restated in this MRP.

ED_002551_00000418-00072

II. MONITORING LOCATIONS

The Discharger shall establish the following monitoring locations to demonstrate compliance with the effluent limitations, discharge specifications, and other requirements in this Order:

Table E-1. Monitoring Station Locations

Discharge Point No.	Monitoring Location Name	Monitoring Location Description
--	INF-001	At a location where all influent wastestream flows to South Bay International Wastewater Treatment Plant (IWTP or Facility) are accounted for in monitoring events; upstream of any in-plant return flows; and where representative samples of influent can be collected before any process or treatment that could alter the properties of the influent. Latitude: 32° 32' 29.94''N; Longitude:117°03' 33.75"W
001	EFF-001	Downstream of any in-plant return flows at the Facility where representative samples of effluent treated at the Facility can be collected, prior to commingling with other discharges contributing to the South Bay Ocean Outfall (SBOO). Latitude: 32° 32' 37.68"N; Longitude:117° 03' 54.83"W
TRANSBOUNDARY STATIONS		
	C1	Goat Canyon Diversion Structure; Approximate Location at Latitude: 32° 32' 13.1994"N; Longitude: 117° 5' 57.516"'W
	C2	Smugglers Gulch Diversion Structure; Approximate Location at Latitude: 32° 32' 23.2794"N; Longitude: 117° 5' 12.8394"W
	C3	Silva Drain Canyon Collector; Approximate Location at Latitude: 32° 32' 22.0554"N; Longitude: 117° 3' 55.4394"W
	C4	Canyon del Sol Collector; Approximate Location at Latitude: 32° 32' 21.0114"N; Longitude: 117° 4' 7.1754"W
	C5	Stewart's Drain Canyon Collector; Approximate Location at Latitude: 32° 32' 25.6914"N; Longitude: 117° 3' 28.1874"W
SHORELINE STATIONS		
--	S-0	Latitude: 32° 25.148'N; Longitude:117°05.837'W Mexico (Southernmost location)
--	S-2	Latitude: 32° 29.922'N; Longitude:117°07.380'W Mexico (Beach south of El Vigia Restaurant)
--	S-3	Latitude: 32° 31.542'N; Longitude:117°07.440'W Mexico (Beach at end of existing road of Playas de Tijuana)
--	S-4	Latitude: 32° 32.118'N; Longitude:117°07.500'W United States (Beach just north of the border fence)
--	S-5	Latitude: 32° 33.468'N; Longitude:117°07.860'W United States (Beach north of mouth of estuary)
--	S-6	Latitude: 32° 33.978'N; Longitude:117°07.980'W United States (Beach at end of Seacoast Drive)
--	S-8	Latitude: 32°38.208'N; Longitude:117°08.640'W United States (Silver Strand State Beach, Area 4 West of Coronado Cays)
--	S-9	Latitude: 32°40.620'N; Longitude:117°10.680'W United States (Beach at end of Avenida Del Sol seaward of Hotel Del Coronado)

ED_002551_00000418-00073