TABLE 75
REGISTRATION OF COMPONENTS IN BENZENE SERVICE
LIGHT OIL WASH, MAIN QUAD NO. 7

0751	DRAIN MANIFOLD															
8550	E	431	2	75	MAIN QUAD	QUAD 7	V	LOW POINT DRAIN MANIFOLD BLOCKING	PASSAGEWAY	LOM	57.63	L	Y	MIU	LO WASH	
8551	E	430	2	75	MAIN QUAD	QUAD 7	V	LOW POINT DRAIN MANIFOLD CLEANOUT	PASSAGEWAY	LOM	57.63	L	Y	MIU	LO WASH	
8552	E	432	2	75	MAIN QUAD	QUAD 7	V	LOW POINT DRAIN MANIFOLD BLOCKING	PASSAGEWAY	LOM	57.63	L	Y	MIU	LO WASH	
8553	E	434	2	75	MAIN QUAD	QUAD 7	V	LOW POINT DRAIN MANIFOLD DISCHARGE	PASSAGEWAY	LOM	57.63	L	Y	MIU	LO WASH	
8554	E	436	2	75	MAIN QUAD	QUAD 7	V	LOW POINT DRAIN MANIFOLD CLEANOUT	PASSAGEWAY	LOM	57.63	L	Y	MIU	LO WASH	
8555	E	435	2	75	MAIN QUAD	QUAD 7	V	LOW POINT DRAIN MANIFOLD AIR TAP	PASSAGEWAY	LOM	57.63	L	Y	MIU	LO WASH	
8556	E	433	2	75	MAIN QUAD	QUAD 7	V	LOW POINT DRAIN MANIFOLD DRAIN	PASSAGEWAY	LOM	57.63	L	Y	MIU	LO WASH	
0752	PRESSURE TAP															
8565			2	75	MAIN QUAD	QUAD 7	V	PRESSURE DIFFERENTIAL TAP	WALL	LOM	57.63	L	Y	MIU	LO WASH, ADDED 12-95	
8566			2	75	MAIN QUAD	QUAD 7	V	PRESSURE DIFFERENTIAL TAP CLEANOUT	WALL	LOM	57.63	L	Y	MIU	LO WASH, ADDED 12-95	
8567			2	75	MAIN QUAD	QUAD 7	V	PRESSURE DIFFERENTIAL TAP	WALL	LOM	57.63	L	Y	MIU	LO WASH, ADDED 12-95	
8568			2	75	MAIN QUAD	QUAD 7	V	PRESSURE DIFFERENTIAL TAP CLEANOUT	WALL	LOM	57.63	L	Y	MIU	LO WASH, ADDED 12-95	
8569			2	75	MAIN QUAD	QUAD 7	V	PRESSURE DIFFERENTIAL TAP	WALL	LOM	57.63	L	Y	MIU	LO WASH, ADDED 12-95	
8570			2	75	MAIN QUAD	QUAD 7	V	PRESSURE DIFFERENTIAL TAP CLEANOUT	WALL	LOM	57.63	L	Y	MIU	LO WASH, ADDED 12-95	
8571			2	75	MAIN QUAD	QUAD 7	V	PRESSURE DIFFERENTIAL TAP	WALL	LOM	57.63	L	Y	MIU	LO WASH, ADDED 12-95	
8572			2	75	MAIN QUAD	QUAD 7	V	PRESSURE DIFFERENTIAL TAP CLEANOUT	WALL	LOM	57.63	L	Y	MIU	LO WASH, ADDED 12-95	
0753	ACETONE MANIFOLD															
8580	E	331	2	75	MAIN QUAD	QUAD 7	V	ACETONE MANIFOLD NITROGEN PURGE	PLATFORM	LOM	57.63	L	Y	MIU	LO WASH	
8581	E	346	2	75	MAIN QUAD	QUAD 7	V	ACETONE MANIFOLD BLOCKING	PLATFORM	LOM	57.63	L	Y	MIU	LO WASH	
8582	E	342	2	75	MAIN QUAD	QUAD 7	V	ACETONE MANIFOLD BLOCKING	PLATFORM	LOM	57.63	L	Y	MIU	LO WASH	
8583			2	75	MAIN QUAD	QUAD 7	V	ACETONE MANIFOLD CLEANOUT	PLATFORM	LOM	57.63	L	Y	MIU	LO WASH, ADDED 12-95	
8584	E	343	2	75	MAIN QUAD	QUAD 7	V	ACETONE MANIFOLD CLEANOUT	PLATFORM	LOM	57.63	L	Y	MIU	LO WASH	
8585			2	75	MAIN QUAD	QUAD 7	V	ACETONE MANIFOLD CLEANOUT	PLATFORM	LOM	57.63	L	Y	MIU	LO WASH, ADDED 12-95	
8586	E	345	2	75	MAIN QUAD	QUAD 7	V	ACETONE MANIFOLD CLEANOUT	PLATFORM	LOM	57.63	L	Y	MIU	LO WASH	
8587	E	341	2	75	MAIN QUAD	QUAD 7	V	ACETONE MANIFOLD BLOCKING	PLATFORM	LOM	57.63	L	Y	MIU	LO WASH	
8588	E	337	2	75	MAIN QUAD	QUAD 7	V	ACETONE MANIFOLD BLOCKING	PLATFORM	LOM	57.63	L	Y	MIU	LO WASH	
8589	E	338	2	75	MAIN QUAD	QUAD 7	V	ACETONE MANIFOLD CLEANOUT	PLATFORM	LOM	57.63	L	Y	MIU	LO WASH	
8590	E	340	2	75	MAIN QUAD	QUAD 7	V	ACETONE MANIFOLD CLEANOUT	PLATFORM	LOM	57.63	L	Y	MIU	LO WASH	
8591	E	339	2	75	MAIN QUAD	QUAD 7	V	ACETONE MANIFOLD CLEANOUT	PLATFORM	LOM	57.63	L	Y	MIU	LO WASH, ADDED 12-95	
8592	E	336	2	75	MAIN QUAD	QUAD 7	V	ACETONE MANIFOLD BLOCKING	PLATFORM	LOM	57.63	L	Y	MIU	LO WASH	
8593	E	332	2	75	MAIN QUAD	QUAD 7	V	ACETONE MANIFOLD BLOCKING	PLATFORM	LOM	57.63	L	Y	MIU	LO WASH	
8594	E	333	2	75	MAIN QUAD	QUAD 7	V	ACETONE MANIFOLD CLEANOUT	PLATFORM	LOM	57.63	L	Y	MIU	LO WASH	
8595	E	335	2	75	MAIN QUAD	QUAD 7	V	ACETONE MANIFOLD CLEANOUT	PLATFORM	LOM	57.63	L	Y	MIU	LO WASH	
8596	E	334	2	75	MAIN QUAD	QUAD 7	V	ACETONE MANIFOLD CLEANOUT	PLATFORM	LOM	57.63	L	Y	MIU	LO WASH	

ED_002508A_00001340-00001

TABLE 76
REGISTRATION OF COMPONENTS IN BENZENE SERVICE
LIGHT OIL WASH AND BALANCING GAS AREAS, MAIN QUADS NO. 1 AND 2

0761	QUAD #1 AREA															
8600	D	090	2	76	MAIN QUAD	R-401D	V	BENZENE OVER FLOW VALVE BLOCKING	OVER WALKWA	SG	16.00	G	Y	MIU	LO WASH	
8601	D	089	2	76	MAIN QUAD	R-401D	V	BENZENE OVER FLOW VALVE CLEANOUT	OVER WALKWA	SG	16.00	G	Y	MIU	LO WASH	
8602	D	094	2	76	MAIN QUAD	R-401C	V	BENZENE OVER FLOW VALVE BLOCKING	OVER WALKWA	SG	16.00	G	Y	MIU	LO WASH	
8603	D	095	2	76	MAIN QUAD	R-401C	V	BENZENE OVER FLOW VALVE CLEANOUT	OVER WALKWA	SG	16.00	G	Y	MIU	LO WASH	
8604	D	102	2	76	MAIN QUAD	R-401B	V	BENZENE OVER FLOW BLOCKING	OVER WALKWA	SG	16.00	G	Y	MIU	LO WASH	
8605	D	103	2	76	MAIN QUAD	R-401B	V	BENZENE OVER FLOW CLEANOUT	OVER WALKWA	SG	16.00	G	Y	MIU	LO WASH	
8606	D	109	2	76	MAIN QUAD	R-401A	V	BENZENE OVER FLOW VALVE BLOCKING	OVER WALKWA	SG	16.00	G	Y	MIU	LO WASH	
8607	D	108	2	76	MAIN QUAD	R-401A	V	BENZENE OVER FLOW VALVE CLEANOUT	OVER WALKWA	SG	16.00	G	Y	MIU	LO WASH	
8615	D	086	2	76	MAIN QUAD	R-401D	V	DERIMMING GAS VALVE CLEANOUT	OVER WALKWA	SG	16.00	G	Y	Q		
8616	D	087	2	76	MAIN QUAD	R-401D	V	DERIMMING GAS VALVE BLOCKING	OVER WALKWA	SG	16.00	G	Y	Q		
8617	D	088	2	76	MAIN QUAD	R-401D	V	DERIMMING GAS VALVE CLEANOUT	OVER WALKWA	SG	16.00	G	Y	Q		
8618	D	096	2	76	MAIN QUAD	R-401C	V	DERIMMING GAS VALVE CLEANOUT	OVER WALKWA	SG	16.00	G	Y	Q		
8619	D	097	2	76	MAIN QUAD	R-401C	V	DERIMMING GAS VALVE BLOCKING	OVER WALKWA	SG	16.00	G	Y	Q		
8620	D	100	2	76	MAIN QUAD	R-401B	V	DERIMMING GAS VALVE BLOCKING	OVER WALKWA	SG	16.00	G	Y	Q		
8621	D	101	2	76	MAIN QUAD	R-401B	V	DERIMMING GAS VALVE CLEANOUT	OVER WALKWA	SG	16.00	G	Y	Q		
8622			2	76	MAIN QUAD	R-401A	V	DERIMMING GAS VALVE BLOCKING	OVER WALKWA	SG	16.00	G	Y	Q	ADDED 12-95	
8623	D	107	2	76	MAIN QUAD	R-401A	V	DERIMMING GAS VALVE CLEANOUT	OVER WALKWA	SG	16.00	G	Y	Q		
0762	QUAD #2 AREA															
8630	D	058	2	76	MAIN QUAD	R-402A	V	BENZENE OVER FLOW VALVE BLOCKING	OVER WALKWA	SG	16.00	G	Y	MIU	LO WASH	
8631	D	059	2	76	MAIN QUAD	R-402A	V	BENZENE OVER FLOW VALVE CLEANOUT	OVER WALKWA	SG	16.00	G	Y	MIU	LO WASH	
8632	D	052	2	76	MAIN QUAD	R-402B	V	BENZENE OVER FLOW VALVE BLOCKING	OVER WALKWA	SG	16.00	G	Y	MIU	LO WASH	
8633	D	053	2	76	MAIN QUAD	R-402B	V	BENZENE OVER FLOW VALVE CLEANOUT	OVER WALKWA	SG	16.00	G	Y	MIU	LO WASH	
8634	D	046	2	76	MAIN QUAD	R-402C	V	BENZENE OVER FLOW VALVE BLOCKING	OVER WALKWA	SG	16.00	G	Y	MIU	LO WASH	
8635	D	047	2	76	MAIN QUAD	R-402C	V	BENZENE OVER FLOW VALVE CLEANOUT	OVER WALKWA	SG	16.00	G	Y	MIU	LO WASH	
8636	D	040	2	76	MAIN QUAD	R-402D	V	BENZENE OVER FLOW VALVE BLOCKING	OVER WALKWA	SG	16.00	G	Y	MIU	LO WASH	
8637	D	041	2	76	MAIN QUAD	R-402D	V	BENZENE OVER FLOW VALVE CLEANOUT	OVER WALKWA	SG	16.00	G	Y	MIU	LO WASH	
8645	D	060	2	76	MAIN QUAD	R-402A	V	DERIMING GAS VALVE BLOCKING	OVER WALKWA	SG	16.00	G	Y	Q		
8646	D	061	2	76	MAIN QUAD	R-402A	V	DERIMING GAS VALVE BLOCKING	OVER WALKWA	SG	16.00	G	Y	Q		
8647	D	062	2	76	MAIN QUAD	R-402A	V	DERIMING GAS VALVE CLEANOUT	OVER WALKWA	SG	16.00	G	Y	Q		
8648	D	054	2	76	MAIN QUAD	R-402B	V	DERIMING GAS VALVE CLEANOUT	OVER WALKWA	SG	16.00	G	Y	Q		
8649	D	055	2	76	MAIN QUAD	R-402B	V	DERIMING GAS VALVE BLOCKING	OVER WALKWA	SG	16.00	G	Y	Q		
8650	D	049	2	76	MAIN QUAD	R-402C	V	DERIMING GAS VALVE CLEANOUT	OVER WALKWA	SG	16.00	G	Y	Q		
8651			2	76	MAIN QUAD	R-402C	V	DERIMING GAS VALVE BLOCKING	OVER WALKWA	SG	16.00	G	Y	Q	ADDED 12-95	
8652	D	042	2	76	MAIN QUAD	R-402D	V	DERIMING GAS VALVE CLEANOUT	OVER WALKWA	SG	16.00	G	Y	Q		
8653	D	043	2	76	MAIN QUAD	R-402D	V	DERIMING GAS VALVE BLOCKING	OVER WALKWA	SG	16.00	G	Y	Q		
0763	LIGHT OIL WASH AREA															
8660	D	073	2	76	MAIN QUAD	QUAD 2	SG	LO WASH SIGHT GLASS	BETW WALKWY	LOM	57.63	L	Y	MIU	LO WASH	
8661	D	074	2	76	MAIN QUAD	QUAD 2	V	LO WASH VALVE BLOCKING	BETW WALKWY	LOM	57.63	L	Y	MIU	LO WASH	
8662	D	072	2	76	MAIN QUAD	QUAD 2	V	LO WASH VALVE CLEANOUT	BETW WALKWY	LOM	57.63	L	Y	MIU	LO WASH	
8663	D	070	2	76	MAIN QUAD	QUAD 2	V	LO WASH VALVE BLOCKING	BETW WALKWY	LOM	57.63	L	Y	MIU	LO WASH	
8664	D	080	2	76	MAIN QUAD	QUAD 1	V	LO WASH VALVE BACKUP	BETW WALKWY	LOM	57.63	L	Y	MIU	LO WASH	
8665	D	079	2	76	MAIN QUAD	QUAD 1	V	LO WASH VALVE CLEANOUT	BETW WALKWY	LOM	57.63	L	Y	MIU	LO WASH	
8666			2	76	MAIN QUAD	QUAD 1	V	LO WASH VALVE BLOCKING	BETW WALKWY	LOM	57.63	L	Y	MIU	LO WASH, ADDED 12-95	
8667	D	076	2	76	MAIN QUAD	QUAD 1	SG	LO WASH SIGHT GLASS	BETW WALKWY	LOM	57.63	L	Y	MIU	LO WASH	
8668	D	075	2	76	MAIN QUAD	QUAD 1	V	LO WASH VALVE BLOCKING	BETW WALKWY	LOM	57.63	L	Y	MIU	LO WASH	
8669	D	078	2	76	MAIN QUAD	QUAD 1	RG	LO WASH REGULATER	BETW WALKWY	LOM	57.63	L	Y	MIU	LO WASH	
8670	D	077	2	76	MAIN QUAD	QUAD 1	V	LO WASH VALVE BLOCKING	BETW WALKWY	LOM	57.63	L	Y	MIU	LO WASH	
8671			2	76	MAIN QUAD	QUAD 1	V	LO WASH VALVE CLEANOUT	BETW WALKWY	LOM	57.63	L	Y	MIU	LO WASH, ADDED 12-95	
8672	D	071	2	76	MAIN QUAD	QUAD 2	V	LO WASH VALVE CLEANOUT	BETW WALKWY	LOM	57.63	L	Y	MIU	LO WASH	

ED_002508A_00001340-00002

0764 BALANCING GAS AREA

8680	D	065	2	76	MAIN QUAD	QUAD 2	V	DERIMING GAS VALVE BLOCKING	BETW WALKWY	SG	16.00	GL	Y	Q
8681	D	068	2	76	MAIN QUAD	QUAD 2	V	DERIMING GAS VALVE BLOCKING	BETW WALKWY	SG	16.00	GL	Y	Q
8682	D	064	2	76	MAIN QUAD	QUAD 2	V	DERIMING GAS VALVE BALANCE	BETW WALKWY	SG	16.00	GL	Y	Q
8683	D	085	2	76	MAIN QUAD	QUAD 1	V	DERIMING GAS VALVE BALANCE	BETW WALKWY	SG	16.00	GL	Y	Q
8684	D	082	2	76	MAIN QUAD	QUAD 1	V	DERIMING GAS VALVE BLOCKING	BETW WALKWY	SG	16.00	GL	Y	Q
8685	D	083	2	76	MAIN QUAD	QUAD 1	V	DERIMING GAS VALVE CLEANOUT	BETW WALKWY	SG	16.00	GL	Y	Q
8686	D	084	2	76	MAIN QUAD	QUAD 1	V	DERIMING GAS VALVE BLOCKING	BETW WALKWY	SG	16.00	GL	Y	Q
8687	D	081	2	76	MAIN QUAD	QUAD 1	V	DERIMING GAS VALVE BALANCE	BETW WALKWY	SG	16.00	GL	Y	Q
8688	D	069	2	76	MAIN QUAD	QUAD 2	V	DERIMING GAS VALVE BALANCE	BETW WALKWY	SG	16.00	GL	Y	Q
8689	D	067	2	76	MAIN QUAD	QUAD 2	V	DERIMING GAS VALVE CLEANOUT	BETW WALKWY	SG	16.00	GL	Y	Q
8690	D	066	2	76	MAIN QUAD	QUAD 2	V	DERIMING GAS VALVE CLEANOUT	BETW WALKWY	SG	16.00	GL	Y	Q

TABLE 77

REGISTRATION OF COMPONENTS IN BENZENE SERVICE

LIGHT OIL WASH AND BALANCING GAS AREAS, MAIN QUADS NO. 3 AND 4

0771	QUAD #3 AREA															
8700	D	155	2	77	MAIN QUAD	R-403A	V	BENZENE OVERFLOW VALVE BLOCKING	OVER WALKWA	SG	16.00	G	Y	MIU		
8701	D	156	2	77	MAIN QUAD	R-403A	V	BENZENE OVERFLOW VALVE CLEANOUT	OVER WALKWA	SG	16.00	G	Y	MIU		
8702	D	148	2	77	MAIN QUAD	R-403B	V	BENZENE OVERFLOW VALVE BLOCKING	OVER WALKWA	SG	16.00	G	Y	MIU		
8703	D	149	2	77	MAIN QUAD	R-403B	V	BENZENE OVERFLOW VALVE CLEANOUT	OVER WALKWA	SG	16.00	G	Y	MIU		
8704	D	145	2	77	MAIN QUAD	R-403C	V	BENZENE OVERFLOW VALVE BLOCKING	OVER WALKWA	SG	16.00	G	Y	MIU		
8705			2	77	MAIN QUAD	R-403C	V	BENZENE OVERFLOW VALVE CLEANOUT	OVER WALKWA	SG	16.00	G	Y	MIU	ADDED 12-95	
8706	D	139	2	77	MAIN QUAD	R-403D	V	BENZENE OVERFLOW VALVE BLOCKING	OVER WALKWA	SG	16.00	G	Y	MIU		
8707	D	138	2	77	MAIN QUAD	R-403D	V	BENZENE OVERFLOW VALVE CLEANOUT	OVER WALKWA	SG	16.00	G	Y	MIU		
8715	D	159	2	77	MAIN QUAD	R-403A	V	DERIMING GAS VALVE BLOCKING	OVER WALKWA	SG	16.00	G	Y	Q		
8716	D	160	2	77	MAIN QUAD	R-403A	V	DERIMING GAS VALVE CLEANOUT	OVER WALKWA	SG	16.00	G	Y	Q		
8717	D	157	2	77	MAIN QUAD	R-403A	V	DERIMING GAS VALVE CLEANOUT	OVER WALKWA	SG	16.00	G	Y	Q		
8718	D	158	2	77	MAIN QUAD	R-403A	V	DERIMING GAS VALVE CLEANOUT	OVER WALKWA	SG	16.00	G	Y	Q		
8719	D	152	2	77	MAIN QUAD	R-403B	V	DERIMING GAS VALVE BLOCKING	OVER WALKWA	SG	16.00	G	Y	Q		
8720	D	151	2	77	MAIN QUAD	R-403B	V	DERIMING GAS VALVE CLEANOUT	OVER WALKWA	SG	16.00	G	Y	Q		
8721	D	150	2	77	MAIN QUAD	R-403B	V	DERIMING GAS VALVE CLEANOUT	OVER WALKWA	SG	16.00	G	Y	Q		
8722	D	142	2	77	MAIN QUAD	R-403C	V	DERIMING GAS VALVE CLEANOUT	OVER WALKWA	SG	16.00	G	Y	Q		
8723	D	143	2	77	MAIN QUAD	R-403C	V	DERIMING GAS VALVE BLOCKING	OVER WALKWA	SG	16.00	G	Y	Q		
8724	D	136	2	77	MAIN QUAD	R-403D	V	DERIMING GAS VALVE CLEANOUT	OVER WALKWA	SG	16.00	G	Y	Q		
8725	D	137	2	77	MAIN QUAD	R-403D	V	DERIMING GAS VALVE BLOCKING	OVER WALKWA	SG	16.00	G	Y	Q		
0772	QUAD #4 AREA															
8730	D	185	2	77	MAIN QUAD	R-404A	V	DERIMMING GAS VALVE BLOCKING	OVER WALKWA	SG	16.00	G	Y	Q		
8731	D	186	2	77	MAIN QUAD	R-404A	V	DERIMMING GAS VALVE CLEANOUT	OVER WALKWA	SG	16.00	G	Y	Q		
8732	D	192	2	77	MAIN QUAD	R-404B	V	DERIMMING GAS VALVE BLOCKING	OVER WALKWA	SG	16.00	G	Y	Q		
8733	D	191	2	77	MAIN QUAD	R-404B	V	DERIMMING GAS VALVE CLEANOUT	OVER WALKWA	SG	16.00	G	Y	Q		
8734	D	198	2	77	MAIN QUAD	R-404C	V	DERIMMING GAS VALVE BLOCKING	OVER WALKWA	SG	16.00	G	Y	Q		
8735	D	197	2	77	MAIN QUAD	R-404C	V	DERIMMING GAS VALVE CLEANOUT	OVER WALKWA	SG	16.00	G	Y	Q		
8736	D	203	2	77	MAIN QUAD	R-404D	V	DERIMMING GAS VALVE BLOCKING	OVER WALKWA	SG	16.00	G	Y	Q		
8737			2	77	MAIN QUAD	R-404D	V	DERIMMING GAS VALVE CLEANOUT	OVER WALKWA	SG	16.00	G	Y	Q		
8745	D	187	2	77	MAIN QUAD	R-404A	V	BENZENE OVER FLOW VALVE CHECKING	OVER WALKWA	SG	16.00	G	Y	MIU		
8746	D	188	2	77	MAIN QUAD	R-404A	V	BENZENE OVER FLOW VALVE BLOCKING	OVER WALKWA	SG	16.00	G	Y	MIU		
8747	D	193	2	77	MAIN QUAD	R-404B	V	BENZENE OVER FLOW VALVE CHECKING	OVER WALKWA	SG	16.00	G	Y	MIU		
8748	D	194	2	77	MAIN QUAD	R-404B	V	BENZENE OVER FLOW VALVE BLOCKING	OVER WALKWA	SG	16.00	G	Y	MIU		
8749	D	200	2	77	MAIN QUAD	R-404C	V	BENZENE OVER FLOW VALVE CHECKING	OVER WALKWA	SG	16.00	G	Y	MIU		
8750	D	199	2	77	MAIN QUAD	R-404C	V	BENZENE OVER FLOW VALVE BLOCKING	OVER WALKWA	SG	16.00	G	Y	MIU		
8751	D	207	2	77	MAIN QUAD	R-404D	V	BENZENE OVER FLOW VALVE CHECKING	OVER WALKWA	SG	16.00	G	Y	MIU	ADDED 12-95	
8752	D	206	2	77	MAIN QUAD	R-404D	V	BENZENE OVER FLOW VALVE BLOCKING	OVER WALKWA	SG	16.00	G	Y	MIU		
8753	D	205	2	77	MAIN QUAD	R-404D	V	BENZENE OVER FLOW VALVE CHECKING	OVER WALKWA	SG	16.00	G	Y	MIU		
0763	LIGHT OIL WASH AREA															
8760	D	171	2	77	MAIN QUAD	QUAD 3	SG	LO WASH SIGHT GLASS	BETW WALKWY	LOM	57.63	L	Y	MIU	LO WASH	
8761			2	77	MAIN QUAD	QUAD 3	V	LO WASH VALVE MAIN CUTOFF QUAD 3	BETW WALKWY	LOM	57.63	L	Y	MIU	LO WASH, ADDED 12-95	
8762	D	163	2	77	MAIN QUAD	QUAD 3	V	LO WASH VALVE	BETW WALKWY	LOM	57.63	L	Y	MIU	LO WASH	
8763	D	164	2	77	MAIN QUAD	QUAD 3	RG	LO WASH REGULATER	BETW WALKWY	LOM	57.63	L	Y	MIU	LO WASH	
8764	D	165	2	77	MAIN QUAD	QUAD 3	V	LO WASH VALVE	BETW WALKWY	LOM	57.63	L	Y	MIU	LO WASH	
8765	D	175	2	77	MAIN QUAD	QUAD 4	V	LO WASH VALVE	BETW WALKWY	LOM	57.63	L	Y	MIU	LO WASH	
8766	D	174	2	77	MAIN QUAD	QUAD 4	V	LO WASH VALVE	BETW WALKWY	LOM	57.63	L	Y	MIU	LO WASH	
8767	D	176	2	77	MAIN QUAD	QUAD 4	RG	LO WASH REGULATER	BETW WALKWY	LOM	57.63	L	Y	MIU	LO WASH	
8768	D	177	2	77	MAIN QUAD	QUAD 4	V	LO WASH VALVE	BETW WALKWY	LOM	57.63	L	Y	MIU	LO WASH	
8769	D	173	2	77	MAIN QUAD	QUAD 4	SG	LO WASH SIGHT GLASS	BETW WALKWY	LOM	57.63	L	Y	MIU	LO WASH	
8770	D	172	2	77	MAIN QUAD	QUAD 4/	V	LO WASH VALVE MAIN CUTOFF QUAD 4	BETW WALKWY	LOM	57.63	L	Y	MIU	LO WASH	
0774	BALANCING GAS AREA															
8780	D	167	2	77	MAIN QUAD	QUAD 3	V	DERIMING GAS VALVE MAIN CUTOFF QUAD 3	BETW WALKWY	SG	16.00	GL	Y	Q		

ED_002508A_00001340-00004

8781	D	169	2	77	MAIN QUAD	QUAD 3	V	DERIMING GAS VALVE	BETW WALKWY	SG	16.00	GL	Y	Q
8782	D	166	2	77	MAIN QUAD	QUAD 3	V	DERIMING GAS VALVE	BETW WALKWY	SG	16.00	GL	Y	Q
8783	D	170	2	77	MAIN QUAD	QUAD 3	V	DERIMING GAS VALVE	BETW WALKWY	SG	16.00	GL	Y	Q
8784	D	168	2	77	MAIN QUAD	QUAD 3	V	DERIMING GAS VALVE	BETW WALKWY	SG	16.00	GL	Y	Q
8785	D	181	2	77	MAIN QUAD	QUAD 4	V	DERIMING GAS VALVE	BETW WALKWY	SG	16.00	GL	Y	Q
8786	D	180	2	77	MAIN QUAD	QUAD 4	V	DERIMING GAS VALVE MAIN CUTOFF QUAD 4	BETW WALKWY	SG	16.00	GL	Y	Q
8787	D	182	2	77	MAIN QUAD	QUAD 4	V	DERIMING GAS VALVE	BETW WALKWY	SG	16.00	GL	Y	Q
8788	D	183	2	77	MAIN QUAD	QUAD 4	V	DERIMING GAS VALVE	BETW WALKWY	SG	16.00	GL	Y	Q
8789	D	179	2	77	MAIN QUAD	QUAD 4	V	DERIMING GAS VALVE	BETW WALKWY	SG	16.00	GL	Y	Q
8790	D	178	2	77	MAIN QUAD	QUAD 4	V	DERIMING GAS VALVE CLEANOUT	BETW WALKWY	SG	16.00	GL	Y	Q

TABLE 78

REGISTRATION OF COMPONENTS IN BENZENE SERVICE

LIGHT OIL WASH AND BALANCING GAS AREAS, MAIN QUADS NO. 5 AND 6

0781	QUAD #5 AREA															
8800	D	317	2	78	MAIN QUAD	R-405D	V	BENZENE OVER FLOW VALVE BLOCKING	OVER WALKWA	SG	16.00	G	Y	MIU		
8801	D	316	2	78	MAIN QUAD	R-405D	V	BENZENE OVER FLOW VALVE CLEANOUT	OVER WALKWA	SG	16.00	G	Y	MIU		
8802	D	310	2	78	MAIN QUAD	R-405C	V	BENZENE OVER FLOW VALVE BLOCKING	OVER WALKWA	SG	16.00	G	Y	MIU		
8803	D	311	2	78	MAIN QUAD	R-405C	V	BENZENE OVER FLOW VALVE CLEANOUT	OVER WALKWA	SG	16.00	G	Y	MIU	ADDED 12-95	
8804	D	303	2	78	MAIN QUAD	R-405B	V	BENZENE OVER FLOW VALVE BLOCKING	OVER WALKWA	SG	16.00	G	Y	MIU		
8805	D	305	2	78	MAIN QUAD	R-405B	V	BENZENE OVER FLOW VALVE CLEANOUT	OVER WALKWA	SG	16.00	G	Y	MIU	ADDED 12-95	
8806	D	295	2	78	MAIN QUAD	R-405A	V	BENZENE OVER FLOW VALVE BLOCKING	OVER WALKWA	SG	16.00	G	Y	MIU		
8807	D	296	2	78	MAIN QUAD	R-405A	V	BENZENE OVER FLOW VALVE CLEANOUT	OVER WALKWA	SG	16.00	G	Y	MIU		
8815	D	313	2	78	MAIN QUAD	R-405D	V	DERIMING GAS VALVE CLEANOUT	OVER WALKWA	SG	16.00	G	Y	Q		
8816	D	314	2	78	MAIN QUAD	R-405D	V	DERIMING GAS VALVE BLOCKING	OVER WALKWA	SG	16.00	G	Y	Q		
8817	D	315	2	78	MAIN QUAD	R-405D	V	DERIMING GAS VALVE CLEANOUT	OVER WALKWA	SG	16.00	G	Y	Q		
8818	D	307	2	78	MAIN QUAD	R-405C	V	DERIMING GAS VALVE CLEANOUT	OVER WALKWA	SG	16.00	G	Y	Q		
8819	D	308	2	78	MAIN QUAD	R-405C	V	DERIMING GAS VALVE BLOCKING	OVER WALKWA	SG	16.00	G	Y	Q		
8820	D	301	2	78	MAIN QUAD	R-405B	V	DERIMING GAS VALVE CLEANOUT	OVER WALKWA	SG	16.00	G	Y	Q		
8821	D	302	2	78	MAIN QUAD	R-405B	V	DERIMING GAS VALVE BLOCKING	OVER WALKWA	SG	16.00	G	Y	Q		
8822	D	298	2	78	MAIN QUAD	R-405A	V	DERIMING GAS VALVE CLEANOUT	OVER WALKWA	SG	16.00	G	Y	Q		
8823	D	299	2	78	MAIN QUAD	R-405A	V	DERIMING GAS VALVE BLOCKING	OVER WALKWA	SG	16.00	G	Y	Q	ADDED 12-95	
0782	QUAD #6 AREA															
8830	D	247	2	78	MAIN QUAD	R-406D	V	BENZENE OVER FLOW VALVE BLOCKING	OVER WALKWA	SG	16.00	G	Y	MIU		
8831	D	248	2	78	MAIN QUAD	R-406D	V	BENZENE OVER FLOW VALVE CLEANOUT	OVER WALKWA	SG	16.00	G	Y	MIU		
8832	D	257	2	78	MAIN QUAD	R-406C	V	BENZENE OVER FLOW VALVE BLOCKING	OVER WALKWA	SG	16.00	G	Y	MIU		
8833	D	273	2	78	MAIN QUAD	QUAD 6	V	BENZENE OVER FLOW VALVE CLEANOUT	OVER WALKWA	SG	16.00	G	Y	MIU		
8834	D	263	2	78	MAIN QUAD	R-406B	V	BENZENE OVER FLOW VALVE BLOCKING	OVER WALKWA	SG	16.00	G	Y	MIU		
8835	D	262	2	78	MAIN QUAD	R-406B	V	BENZENE OVER FLOW VALVE CLEANOUT	OVER WALKWA	SG	16.00	G	Y	MIU		
8836	D	269	2	78	MAIN QUAD	R-406A	V	BENZENE OVER FLOW VALVE BLOCKING	OVER WALKWA	SG	16.00	G	Y	MIU		
8837	D	268	2	78	MAIN QUAD	R-406A	V	BENZENE OVER FLOW VALVE CLEANOUT	OVER WALKWA	SG	16.00	G	Y	MIU		
8845	D	249	2	78	MAIN QUAD	R-406D	V	DERIMING GAS FLOW CLEANOUT	OVER WALKWA	SG	16.00	G	Y	Q		
8846	D	250	2	78	MAIN QUAD	R-406D	V	DERIMING GAS FLOW BLOCKING	OVER WALKWA	SG	16.00	G	Y	Q		
8847	D	251	2	78	MAIN QUAD	R-406D	V	DERIMING GAS FLOW CLEANOUT	OVER WALKWA	SG	16.00	G	Y	Q		
8848	D	254	2	78	MAIN QUAD	R-406C	V	DERIMING GAS FLOW CLEANOUT	OVER WALKWA	SG	16.00	G	Y	Q		
8849	D	255	2	78	MAIN QUAD	R-406C	V	DERIMING GAS FLOW BLOCKING	OVER WALKWA	SG	16.00	G	Y	Q		
8850	D	261	2	78	MAIN QUAD	R-406B	V	DERIMING GAS FLOW CLEANOUT	OVER WALKWA	SG	16.00	G	Y	Q		
8851	D	260	2	78	MAIN QUAD	R-406B	V	DERIMING GAS FLOW BLOCKING	OVER WALKWA	SG	16.00	G	Y	Q		
8852	D	267	2	78	MAIN QUAD	R-406A	V	DERIMING GAS FLOW CLEANOUT	OVER WALKWA	SG	16.00	G	Y	Q		
8853	D	266	2	78	MAIN QUAD	R-406A	V	DERIMING GAS FLOW BLOCKING	OVER WALKWA	SG	16.00	G	Y	Q		
0783	LIGHT OIL WASH AREA															
8860	D	287	2	78	MAIN QUAD	QUAD 5	SG	LO WASH SIGHT GLASS	BETW WALKWY	LOM	57.63	L	Y	MIU	LO WASH	
8861	D	288	2	78	MAIN QUAD	QUAD 5	V	LO WASH VALVE MAIN CUT OFF QUAD 5	BETW WALKWY	LOM	57.63	L	Y	MIU	LO WASH	
8862	D	286	2	78	MAIN QUAD	QUAD 5	V	LO WASH VALVE	BETW WALKWY	LOM	57.63	L	Y	MIU	LO WASH	
8863	D	285	2	78	MAIN QUAD	QUAD 5	V	LO WASH REGULATER	BETW WALKWY	LOM	57.63	L	Y	MIU	LO WASH	
8864	D	284	2	78	MAIN QUAD	QUAD 5	V	LO WASH VALVE	BETW WALKWY	LOM	57.63	L	Y	MIU	LO WASH	
8865	D	272	2	78	MAIN QUAD	QUAD 6	V	LO WASH VALVE BACKUP	BETW WALKWY	LOM	57.63	L	Y	MIU	LO WASH	
8866	D	256	2	78	MAIN QUAD	R-406C	V	LO WASH VALVE	BETW WALKWY	LOM	57.63	L	Y	MIU	LO WASH	
8867	D	274	2	78	MAIN QUAD	QUAD 6	V	LO WASH VALVE	BETW WALKWY	LOM	57.63	L	Y	MIU	LO WASH	
8868	D	271	2	78	MAIN QUAD	QUAD 6	V	LO WASH VALVE	BETW WALKWY	LOM	57.63	L	Y	MIU	LO WASH	
8869	D	275	2	78	MAIN QUAD	QUAD 6	RG	LO WASH REGULATER	BETW WALKWY	LOM	57.63	L	Y	MIU	LO WASH	
8870	D	276	2	78	MAIN QUAD	QUAD 6	V	LO WASH VALVE	BETW WALKWY	LOM	57.63	L	Y	MIU	LO WASH	
8871	D	277	2	78	MAIN QUAD	QUAD 6	SG	LO WASH SIGHT GLASS	BETW WALKWY	LOM	57.63	L	Y	MIU	LO WASH	
8872	D	278	2	78	MAIN QUAD	QUAD 6	V	LO WASH VALVE MAIN CUTOFF QUAD 6	BETW WALKWY	LOM	57.63	L	Y	MIU	LO WASH	

ED_002508A_00001340-00006

0784 BALANCING GAS AREA

8880	D	292	2	78	MAIN QUAD	QUAD 5	V	DERIMING GAS VALVE MAIN CUTOFF QUAD 5	BETW WALKWY	SG	16.00	GL	Y	Q
8881	D	289	2	78	MAIN QUAD	QUAD 5	V	DERIMING GAS VALVE	BETW WALKWY	SG	16.00	GL	Y	Q
8882	D	293	2	78	MAIN QUAD	QUAD 5	V	DERIMING GAS VALVE	BETW WALKWY	SG	16.00	GL	Y	Q
8883	D	291	2	78	MAIN QUAD	QUAD 5	V	DERIMING GAS VALVE	BETW WALKWY	SG	16.00	GL	Y	Q
8884	D	290	2	78	MAIN QUAD	QUAD 5	V	DERIMING GAS VALVE	BETW WALKWY	SG	16.00	GL	Y	Q
8885	D	279	2	78	MAIN QUAD	QUAD 6	V	DERIMING GAS VALVE	BETW WALKWY	SG	16.00	GL	Y	Q
8886	D	283	2	78	MAIN QUAD	QUAD 6	V	DERIMING GAS VALVE MAIN CUTOFF QUAD 6	BETW WALKWY	SG	16.00	GL	Y	Q
8887	D	280	2	78	MAIN QUAD	QUAD 6	V	DERIMING GAS VALVE	BETW WALKWY	SG	16.00	GL	Y	Q
8888	D	282	2	78	MAIN QUAD	QUAD 6	V	DERIMING GAS VALVE	BETW WALKWY	SG	16.00	GL	Y	Q
8889	D	281	2	78	MAIN QUAD	QUAD 6	V	DERIMING GAS VALVE	BETW WALKWY	SG	16.00	GL	Y	Q

TABLE 79
REGISTRATION OF COMPONENTS IN BENZENE SERVICE
LIGHT OIL WASH AND BALANCING GAS AREAS, MAIN QUAD NO. 7

0791	QUAD #7 AREA																
8900	D	345	2	79	MAIN QUAD	R-407A	V	BENZENE OVER FLOW VALVE	OVER WALKWA	SG	16.00	G	Y	MIU		
8901			2	79	MAIN QUAD	R-407A	V	BENZENE OVER FLOW VALVE	OVER WALKWA	SG	16.00	G	Y	MIU	ADDED 12-95	
8902	D	350	2	79	MAIN QUAD	R-407B	V	BENZENE OVER FLOW VALVE	OVER WALKWA	SG	16.00	G	Y	MIU		
8903			2	79	MAIN QUAD	R-407B	V	BENZENE OVER FLOW VALVE	OVER WALKWA	SG	16.00	G	Y	MIU	ADDED 12-95	
8904	D	353	2	79	MAIN QUAD	R-407C	V	BENZENE OVER FLOW VALVE	OVER WALKWA	SG	16.00	G	Y	MIU		
8905			2	79	MAIN QUAD	R-407C	V	BENZENE OVER FLOW VALVE	OVER WALKWA	SG	16.00	G	Y	MIU	ADDED 12-95	
8906	D	357	2	79	MAIN QUAD	R-407D	V	BENZENE OVER FLOW VALVE	OVER WALKWA	SG	16.00	G	Y	MIU		
8907			2	79	MAIN QUAD	R-407D	V	BENZENE OVER FLOW VALVE	OVER WALKWA	SG	16.00	G	Y	MIU	ADDED 12-95	
8910	D	354	2	79	MAIN QUAD	R-407C	V	BENZENE OVER FLOW VALVE	OVER WALKWA	SG	16.00	G	Y	MIU		
0792	BALANCING GAS AREA																
8924	D	387	2	79	MAIN QUAD	QUAD 7	V	DERIMING GAS VALVE	BETW WALKWY	SG	16.00	GL	Y	Q		
8925	D	388	2	79	MAIN QUAD	QUAD 7	V	DERIMING GAS VALVE	BETW WALKWY	SG	16.00	GL	Y	Q		
8926	D	389	2	79	MAIN QUAD	QUAD 7	V	DERIMING GAS VALVE	BETW WALKWY	SG	16.00	GL	Y	Q		
8927	D	390	2	79	MAIN QUAD	QUAD 7	V	DERIMING GAS VALVE BLOCKING	BETW WALKWY	SG	16.00	GL	Y	Q		
8928	D	392	2	79	MAIN QUAD	QUAD 7	V	DERIMING GAS VALVE	BETW WALKWY	SG	16.00	GL	Y	Q	ADDED 12-95	
8929	D	393	2	79	MAIN QUAD	QUAD 7	V	DERIMING GAS VALVE	BETW WALKWY	SG	16.00	GL	Y	Q	ADDED 12-95	
0793	LIGHT OIL WASH AREA																
8920			2	79	MAIN QUAD	QUAD 7	V	LO WASH VALVE BLOCKING	BETW WALKWY	LOM	57.63	L	Y	MIU	LO WASH, ADDED 12-95	
8921	D	386	2	79	MAIN QUAD	QUAD 7	V	LO WASH VALVE BLOCKING	BETW WALKWY	LOM	57.63	L	Y	MIU	LO WASH, ADDED 7-96	
8922			2	79	MAIN QUAD	QUAD 7	V	LO WASH CLEANOUT VALVE	BETW WALKWY	LOM	57.63	L	Y	MIU	LO WASH	
8923	D	383	2	79	MAIN QUAD	QUAD 7	V	LO WASH VALVE BLOCKING	BETW WALKWY	LOM	57.63	L	Y	MIU	LO WASH	

ED_002508A_00001340-00008

TABLE 80
REGISTRATION OF COMPONENTS IN BENZENE SERVICE
SUB GAS BYPASS TO CARBONATE

6550	F	425	2	80	LO REGEN	R-590	V	BLOCKING VALVE	AREA	SG	16.00	G	Y	Q	
6551	F	434	2	80	LO REGEN	R-590	V	VALVE	AREA	SG	16.00	G	Y	Q	NEW 6/93
6552	F	447	2	80	LO REGEN	R-590	V	VALVE	AREA	SG	16.00	G	Y	Q	
6553	F	437	2	80	LO REGEN	R-590	SW	35 PSIG SWITCH	AREA	SG	16.00	G	Y	Q	
6554	F	435	2	80	LO REGEN	R-590	V	PRESSURE TAP	AREA	SG	16.00	G	Y	Q	NEW 6/93
6555	F	436	2	80	LO REGEN	R-590	G	PRESSURE GAUGE	AREA	SG	16.00	G	Y	Q	NEW 6/93
6556	F	433	2	80	LO REGEN	R-590	V	BLOCKING VALVE	AREA	SG	16.00	G	Y	Q	NEW 6/93
6557			2	80	LO REGEN	R-590	R	REGULATOR	AREA	SG	16.00	G	Y	Q	ADDED 12-95
6558			2	80	LO REGEN	R-590	V	VALVE	AREA	SG	16.00	G	Y	Q	ADDED 12-95
6559	F	426	2	80	LO REGEN	R-590	V	VALVE	AREA	SG	16.00	G	Y	Q	
6560	F	427	2	80	LO REGEN	R-590	V	VALVE	AREA	SG	16.00	G	Y	Q	NEW 6/93
6561	F	448	2	80	LO REGEN	R-590	V	BLOCKING VALVE	AREA	SG	16.00	G	Y	Q	
6562	F	428	2	80	LO REGEN	R-590	R	REGULATOR	AREA	SG	16.00	G	Y	Q	NEW 6/93
6563	F	438	2	80	LO REGEN	R-590	V	PRESSURE TAP	AREA	SG	16.00	G	Y	Q	NEW 6/93
6564	F	439	2	80	LO REGEN	R-590	V	PRESSURE TAP	AREA	SG	16.00	G	Y	Q	NEW 12/93
6565	F	440	2	80	LO REGEN	R-590	PD	PRESSURE TRANSDUCER	AREA	SG	16.00	G	Y	Q	NEW 12/93
6566	F	429	2	80	LO REGEN	R-590	V	PRESSURE TAP	AREA	SG	16.00	G	Y	Q	NEW 6/93
6567	F	430	2	80	LO REGEN	R-590	G	PRESSURE GAUGE	AREA	SG	16.00	G	Y	Q	NEW 6/93
6568	F	431	2	80	LO REGEN	R-590	AL	30 PSIG ALARM	AREA	SG	16.00	G	Y	Q	NEW 6/93
6569	F	441	2	80	LO REGEN	R-590	V	CLEANOUT VALVE	AREA	SG	16.00	G	Y	Q	
6570	F	445	2	80	LO REGEN	R-590	V	CLEANOUT VALVE	AREA	SG	16.00	G	Y	Q	
6571	F	442	2	80	LO REGEN	R-590	V	CONTROL VALVE	AREA	SG	16.00	G	Y	Q	
6572	F	446	2	80	LO REGEN	R-590	V	CLEANOUT VALVE	AREA	SG	16.00	G	Y	Q	
6573	F	443	2	80	LO REGEN	R-590	V	CLEANOUT VALVE	AREA	SG	16.00	G	Y	Q	
6574	F	444	2	80	LO REGEN	R-590	V	BLOCKING VALVE	AREA	SG	16.00	G	Y	Q	

ED_002508A_00001340-00009

TABLE 81
REGISTRATION OF COMPONENTS IN BENZENE SERVICE
LIGHT OIL DECANT VENTING SYSTEM

1900	E	510	2	81	LO DECANT D-604/60	V	BLOCKING VALVE	SECOND LEVEL	LO	57.63	G	Y	Q		
1901	E	511	2	81	LO DECANT D-604/60	V	VALVE	SECOND LEVEL	LO	57.63	G	Y	Q		
1902	E	512	2	81	LO DECANT D-604/60	V	CLEANOUT VALVE	SECOND LEVEL	LO	57.63	G	Y	Q		
1910	E	329	2	81	DECANTERS D-604/60	V	BLOCKING VALVE	THIRD LEVEL	LO	57.63	G	Y	Q		
1911	E	328	2	81	DECANTERS D-604/60	V	VALVE	THIRD LEVEL	LO	57.63	G	Y	Q		
1912	E	325	2	81	DECANTERS D-604/60	V	VALVE	THIRD LEVEL	LO	57.63	G	Y	Q		
1913	E	326	2	81	DECANTERS D-604/60	V	VALVE	THIRD LEVEL	LO	57.63	G	Y	Q		
1914	E	330	2	81	DECANTERS D-604/60	V	CONTROL VALVE	THIRD LEVEL	LO	57.63	G	Y	Q		
1915	E	327	2	81	DECANTERS D-604/60	V	CLEANOUT VALVE	THIRD LEVEL	LO	57.63	G	Y	Q		
1920	E	320	2	81	DECANTERS D-604/60	V	CONTROL VANVE	THIRD LEVEL	LO	57.63	G	Y	Q		
1921	E	324	2	81	DECANTERS D-604/60	V	VALVE	THIRD LEVEL	LO	57.63	G	Y	Q		
1922	E	321	2	81	DECANTERS D-604/60	V	VALVE	THIRD LEVEL	LO	57.63	G	Y	Q		
1924			2	81	DECANTERS D-604/60	V	CLEANOUT VALVE	THIRD LEVEL	LO	57.63	G	Y	Q		
1925	E	322	2	81	DECANTERS D-604/60	V	CLEANOUT VALVE	THIRD LEVEL	LO	57.63	G	Y	Q		
1930	E	319	2	81	DECANTERS D-604/60	V	BLOCKING VALVE	THIRD LEVEL	LO	57.63	G	Y	Q		
1931	E	533	2	81	DECANTERS D-604/60	V	CLEANOUT VALVE	THIRD LEVEL	LO	57.63	G	Y	Q		
1932	E	317	2	81	DECANTERS D-604/60	V	VALVE	THIRD LEVEL	LO	57.63	G	Y	Q		
1933	E	316	2	81	DECANTERS D-604/60	V	VALVE	THIRD LEVEL	LO	57.63	G	Y	Q		
1934			2	81	DECANTERS D-604/60	V	CLEANOUT VALVE	THIRD LEVEL	LO	57.63	G	Y	Q	ADDED 12-95	
1934	E	318	2	81	DECANTERS D-604/60	V	CLEANOUT VALVE	THIRD LEVEL	LO	57.63	G	Y	Q		
1935	E	315	2	81	DECANTERS D-604/60	V	VALVE	THIRD LEVEL	LO	57.63	G	Y	Q		
1940	E	532	2	81	DECANTERS D-604/60	PD	PRESSURE TRANSDUCER 6040	THIRD LEVEL	LO	57.63	G	Y	Q		
1941	E	531	2	81	DECANTERS D-604/60	G	PRESSURE GAUGE	THIRD LEVEL	LO	57.63	G	Y	Q		
1942	E	530	2	81	DECANTERS D-604/60	V	PRESSURE TAP	THIRD LEVEL	LO	57.63	G	Y	Q		
1943	E	314	2	81	DECANTERS D-604/60	V	PRESSURE TAP	THIRD LEVEL	LO	57.63	G	Y	Q		
1944	E	529	2	81	DECANTERS D-604/60	V	PRESSURE TAP CLEANOUT	THIRD LEVEL	LO	57.63	G	Y	Q		
1945	E	528	2	81	DECANTERS D-604/60	PD	PRESSURE TRANSDUCER 6019	THIRD LEVEL	LO	57.63	G	Y	Q		
1946	E	527	2	81	DECANTERS D-604/60	G	PRESSURE GAUGE	THIRD LEVEL	LO	57.63	G	Y	Q		
1947	E	526	2	81	DECANTERS D-604/60	V	PRESSURE TAP CLEANOUT	THIRD LEVEL	LO	57.63	G	Y	Q		
1948	E	525	2	81	DECANTERS D-604/60	V	PRESSURE TAP	THIRD LEVEL	LO	57.63	G	Y	Q		
1949	E	524	2	81	DECANTERS D-604/60	V	PRESSURE TAP	THIRD LEVEL	LO	57.63	G	Y	Q		
1950	E	534	2	81	DECANTERS D-604/60	SW	PRESSURE SWITCH 6028A	THIRD LEVEL	LO	57.63	G	Y	Q		
1951	E	313	2	81	DECANTERS D-604/60	V	PRESSURE TAP	THIRD LEVEL	LO	57.63	G	Y	Q		
1960	E	312	2	81	DECANTERS D-604/60	V	PRESSURE TAP	THIRD LEVEL	LO	57.63	G	Y	Q		
1961	E	520	2	81	DECANTERS D-604/60	V	PRESSURE TAP CLEANOUT	THIRD LEVEL	LO	57.63	G	Y	Q		
1962	E	521	2	81	DECANTERS D-604/60	V	PRESSURE TAP	THIRD LEVEL	LO	57.63	G	Y	Q		
1963	E	522	2	81	DECANTERS D-604/60	G	PRESSURE GAUGE	THIRD LEVEL	LO	57.63	G	Y	Q		
1964	E	523	2	81	DECANTERS D-604/60	PD	PRESSURE TRANSDUCER 6006	THIRD LEVEL	LO	57.63	G	Y	Q		

ED_002508A_00001340-00010

INDEX OF USS CLAIRTON
NESHAPS DRAWINGS

FIG #	SUBJECT
1	Main Axi Compr C-100
2	Main Axi Compr C-105
3	Main Axi Compr C-110
4	Main Axi Compr C-115
5	Main Axi Compr C-120
6	Main Axi Compr C-125
7	Main Axi Compr C-130
8	Main Axi Compr C-135
9	Main Axi Compr C-140
10	Main Axi Compr C-145
11	Main Axi Compr C-150
12	Main Axi Compr C-155
13	Main Axi Compr C-160
14	Main Axi Compr C-165
15	Main Axi Compr C-170
16	Main Axi Compr C-175
17	Main Axi Compr C-180
18	Main Axi Compr C-185
19	LO Tanks, Final Cool
20	Final Coolers T-201/2/3/6
21	Super Still T207
22	Super Still Spirals
23	Vac Machine C-500
24	Vac Manhine C-503
25	Vac Machine C-506
26	Vac Machine C-509
27	Dual Axi C-512
28	Dual Axi C-515
29	Dual Axi C-518
30	Dual Axi C-521
31	Dual Axi C-524
32	Dual Axi C-527
33	Dual Axi C-530
34	Dual Axi C-533
35	Dual Axi C-536
36	Dual Axi C-539
37	Dual Axi C-542
38	Dual Axi C-545
39	Dual Axi C-548
40	Quad 1
41	Quad 2
42	Quad 3
43	Quad 4
44	Quad 5
45	Quad 6
46	Quad 7
47	Sub Gas Inj Water Sep
48	Sub Gas Water Coolers
49	Sub Gas Water Separator
50	Sub Gas Ammonia Coolers
51	Sub Gas Amm Cool Sep
52	Sub Gas Dual Axi Hdr
53	Lite Oil Regenerator R-582
54	Lite Oil Regenerator R-584
55	Lite Oil Regenerator R-586
56	Lite Oil Regenerator R-590
57	LO Regen R584
58	SSG Inj Wat Sep D600
59	SSG Wat Cool E639,40
60	SSG Wat Sep D602
61	SSG Amm Cool E641,42
62	SSG Amm Sep D624
63	LO Decant D604,05
64	LO Transfer Pumps
65	LO Tx Line to Aristech
66	LO Wash - Heat Exch
67	LO Wash - Bldwn Tank
68	LO Wash - Bldwn Pumps
69	Quad 1 Bottom Wash
70	Quad 2 Bottom Wash
71	Quad 3 Bottom Wash
72	Quad 4 Bottom Wash
73	Quad 5 Bottom Wash
74	Quad 6 Bottom Wash
75	Quad 7 Bottom Wash
76	Quad 1/2 Top Wash
77	Quad 3/4 Top Wash
78	Quad 5/6 Top Wash
79	Quad 7 Top Wash
80	Sub Gas Bypass to Carb
81	Lite Oil Decanter Vents

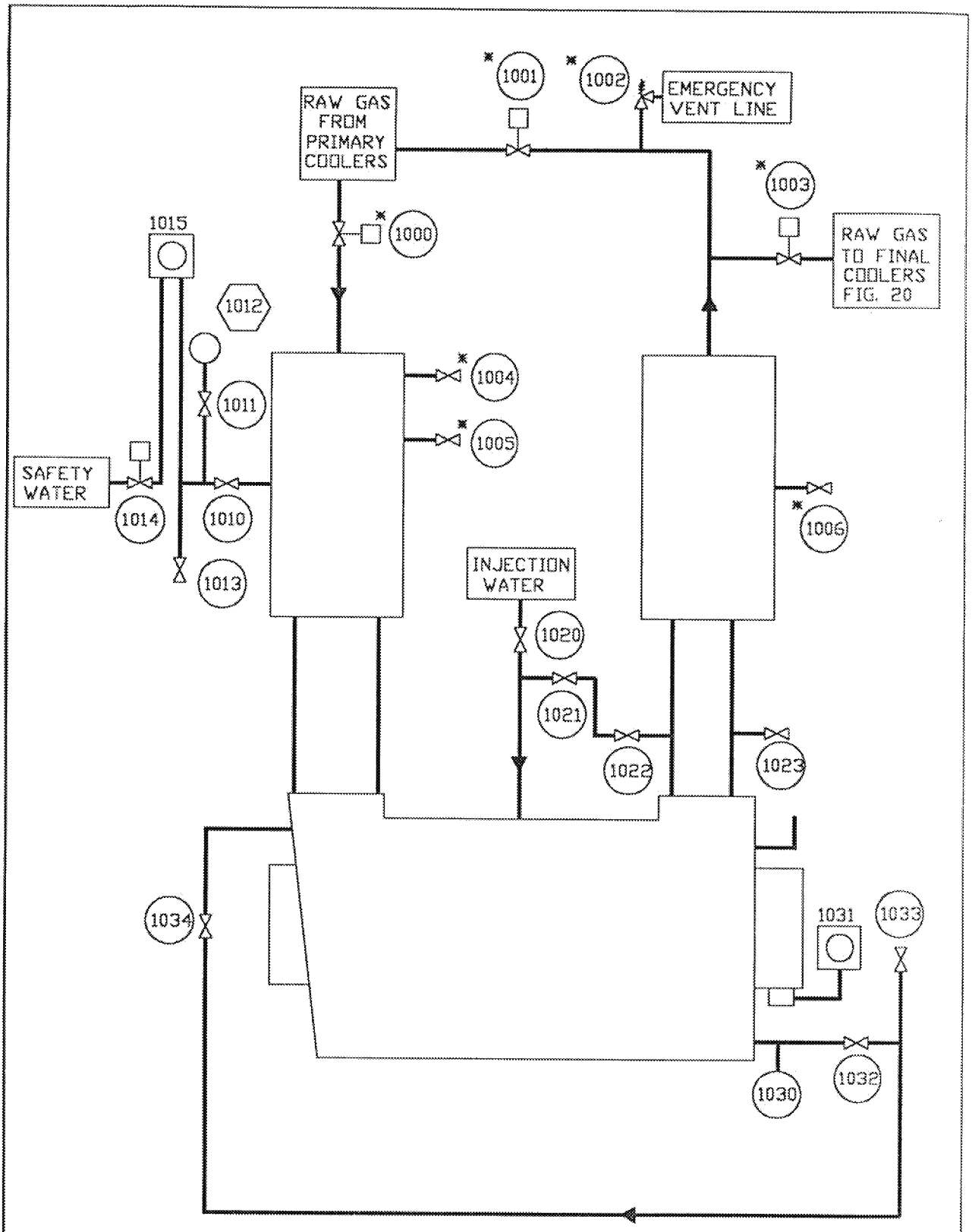

* THESE VALVES NOT ACCESSIBLE

FIGURE 1

MAIN AXI COMPRESSOR C-100
BY-PRODUCT, CONTROL ROOM #1
USX, CLAIRTON COKE WORKS

ADVANCED TECHNOLOGY SYSTEMS INC.

PREPARED BY	CHECKED BY
AMK	
DATE	PROJECT #
12/08/95	
DWG.	/206/FIG1.DWG

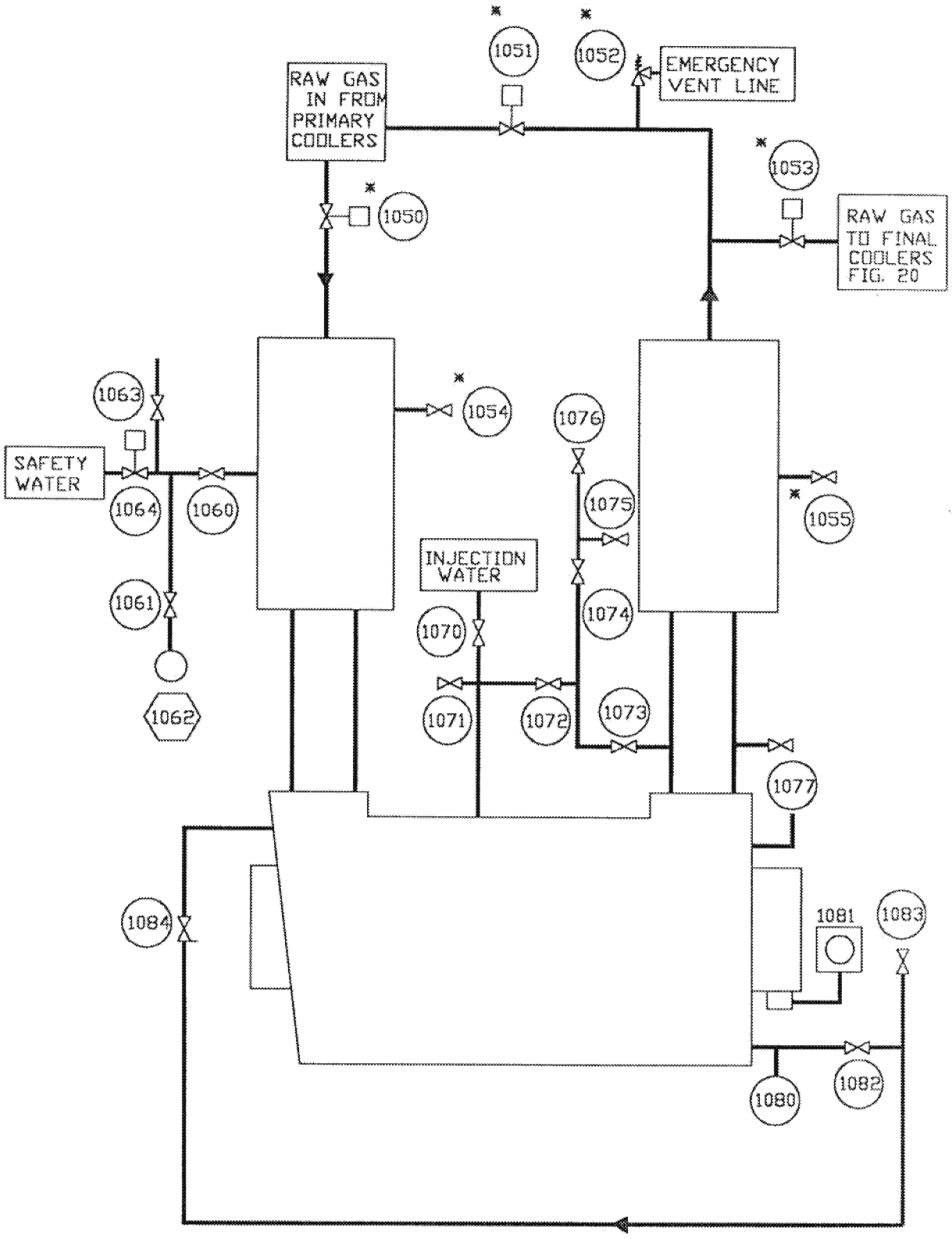

* THESE VALVES NOT ACCESSIBLE

FIGURE 2

MAIN AXI COMPRESSOR C-105
BY-PRODUCT, CONTROL ROOM #1
USX, CLAIRTON COKE WORKS

ADVANCED TECHNOLOGY SYSTEMS INC.

PREPARED BY	CHECKED BY
AMK	
DATE	PROJECT #
12/08/95	
DWG.	/206/FIG2.DWG

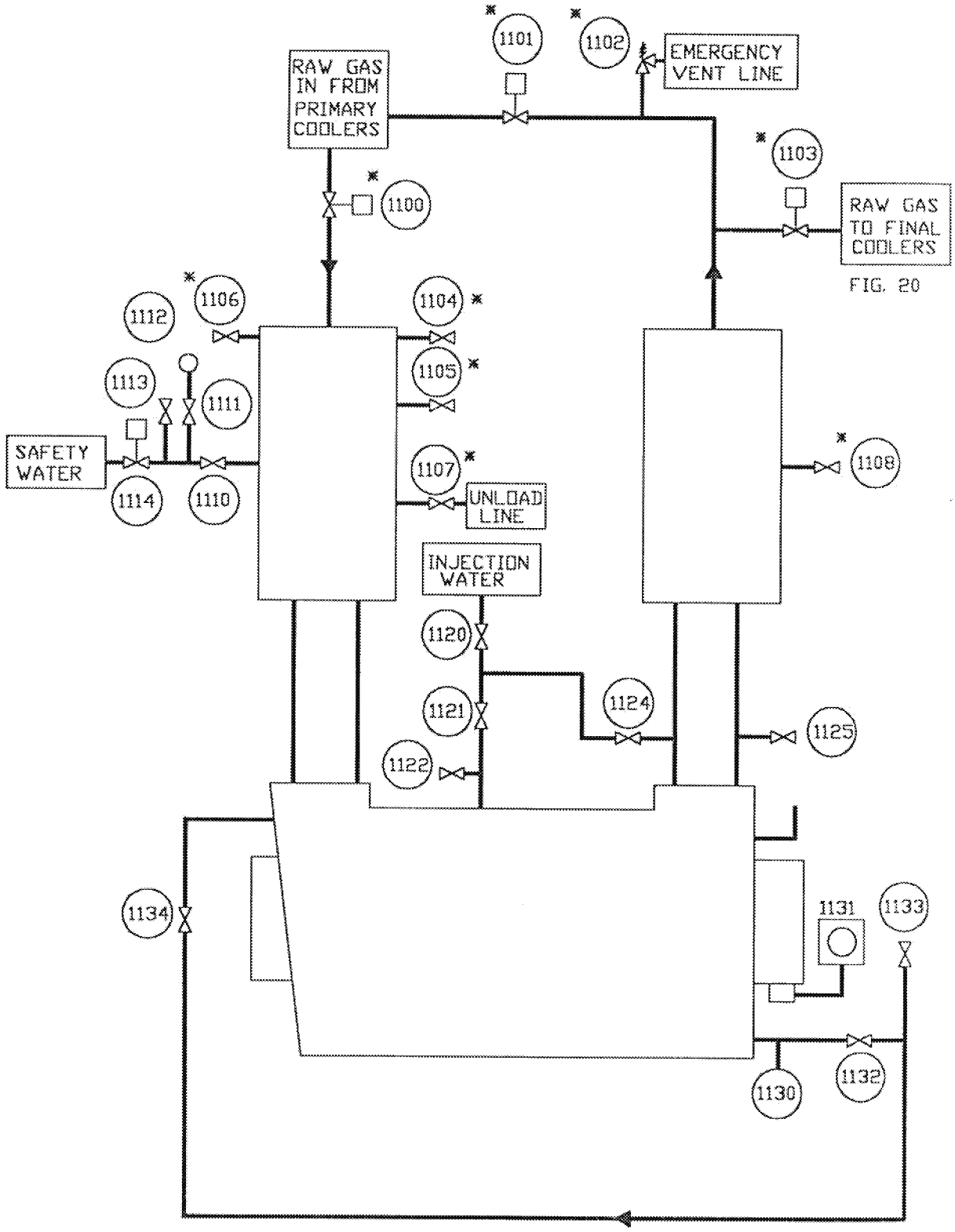

* THESE VALVES NOT ACCESSIBLE

Rev. #1
9/11/96

FIGURE 3

MAIN AXI COMPRESSOR C-110
BY-PRODUCT, CONTROL ROOM #1
USX, CLAIRTON COKE WORKS

ADVANCED TECHNOLOGY SYSTEMS INC.

PREPARED BY	CHECKED BY
AMK	
DATE	PROJECT #
12/08/95	
DWG.	

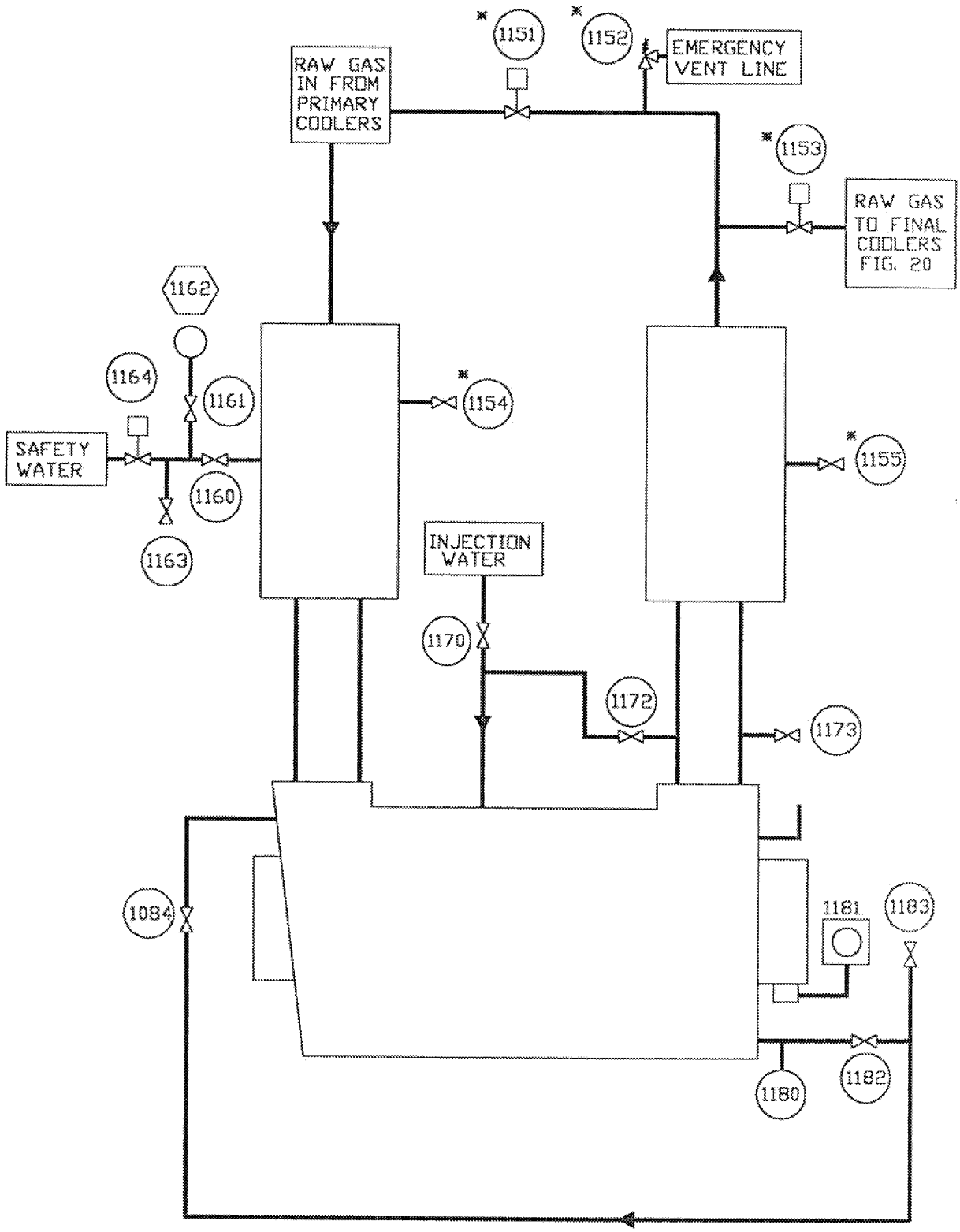

* THESE VALVES NOT ACCESSIBLE

Rev. #1
9/11/96

FIGURE 4

MAIN AXI COMPRESSOR C-115
BY-PRODUCT, CONTROL ROOM #1
USX, CLAIRTON COKE WORKS

ADVANCED TECHNOLOGY SYSTEMS INC.

PREPARED BY	CHECKED BY
AMK	
DATE	PROJECT #
12/08/95	
DWG.	

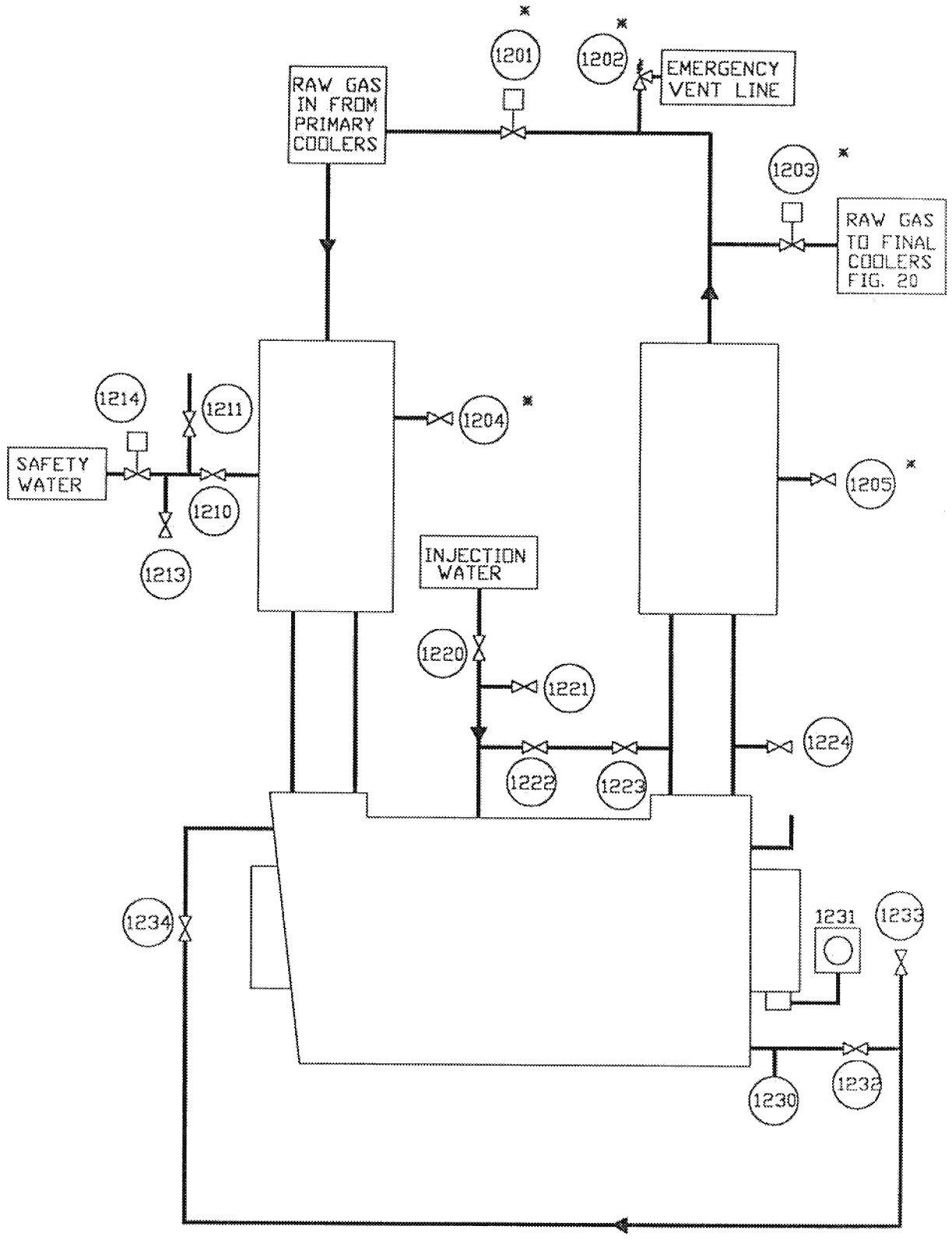

* THESE VALVES NOT ACCESSIBLE

Rev. #1
9/11/96

FIGURE 5

MAIN AXI COMPRESSOR C-120
BY-PRODUCT, CONTROL ROOM #1
USX, CLAIRTON COKE WORKS

ADVANCED TECHNOLOGY SYSTEMS INC.

PREPARED BY	CHECKED BY
AMK	
DATE	PROJECT #
12/08/95	
DWG.	

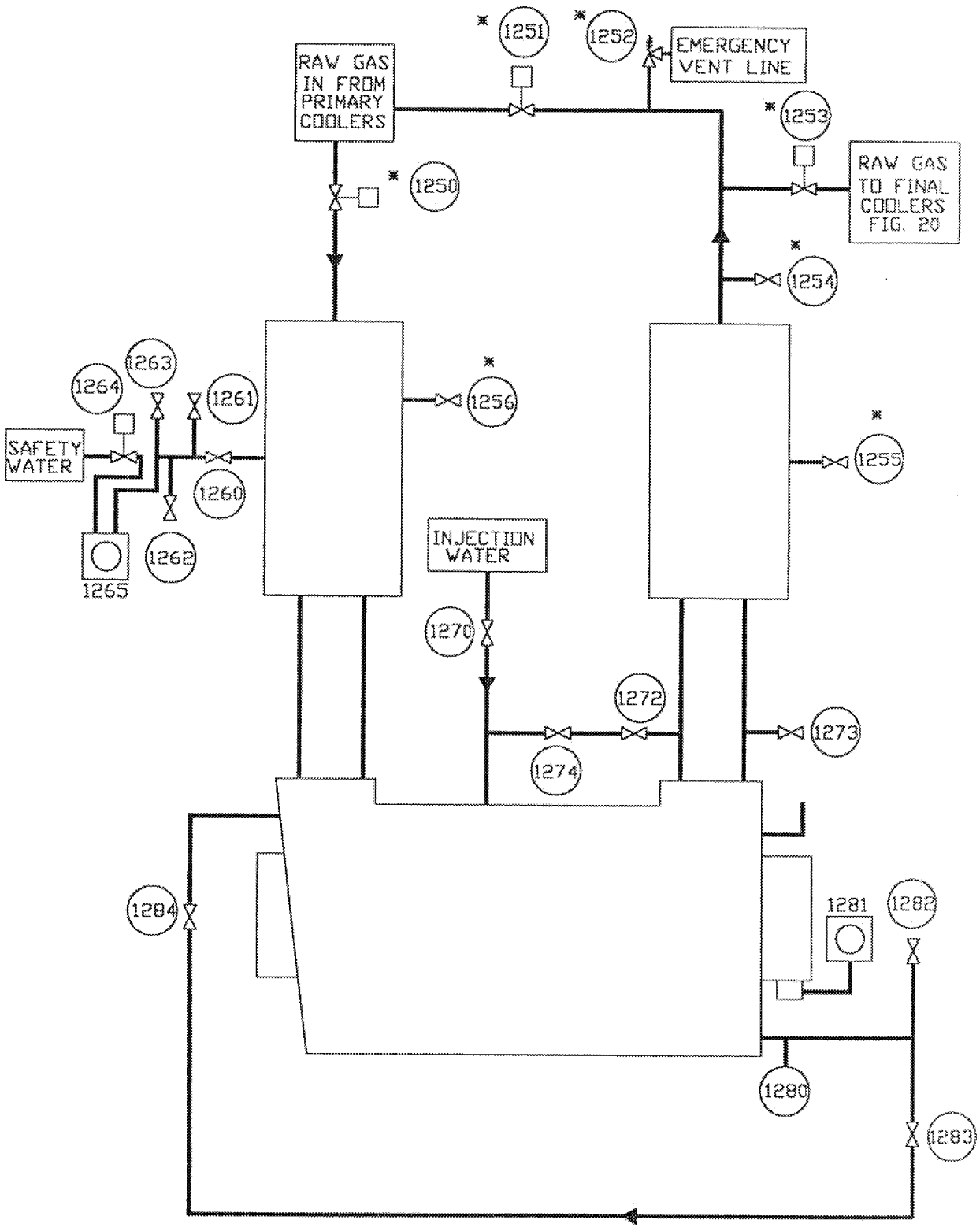

* THESE VALVES NOT ACCESSIBLE

FIGURE 6

MAIN AXI COMPRESSOR C-125
BY-PRODUCT, CONTROL ROOM #1
USX, CLAIRTON COKE WORKS

ADVANCED TECHNOLOGY SYSTEMS INC.

PREPARED BY	CHECKED BY
AMK	
DATE	PROJECT #
12/08/95	
DWG.	

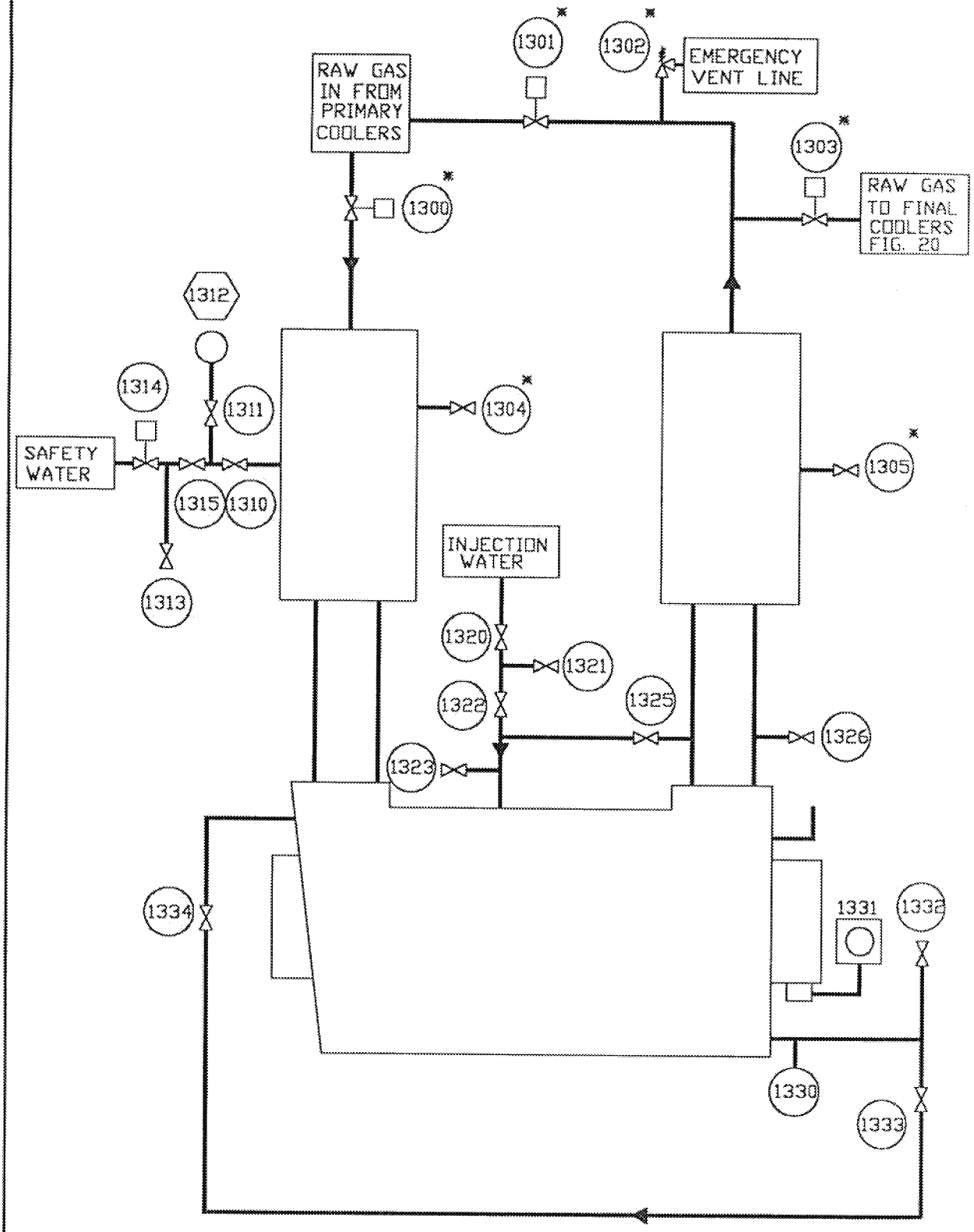

* THESE VALVES NOT ACCESSIBLE

Rev. #1
9/11/96

FIGURE 7

MAIN AXI COMPRESSOR C-130
BY-PRODUCT, CONTROL ROOM #1
USX, CLAIRTON COKE WORKS

ADVANCED TECHNOLOGY SYSTEMS INC.

ATS

PREPARED BY	CHECKED BY
AMK	
DATE	PROJECT #
12/11/95	
DWG.	

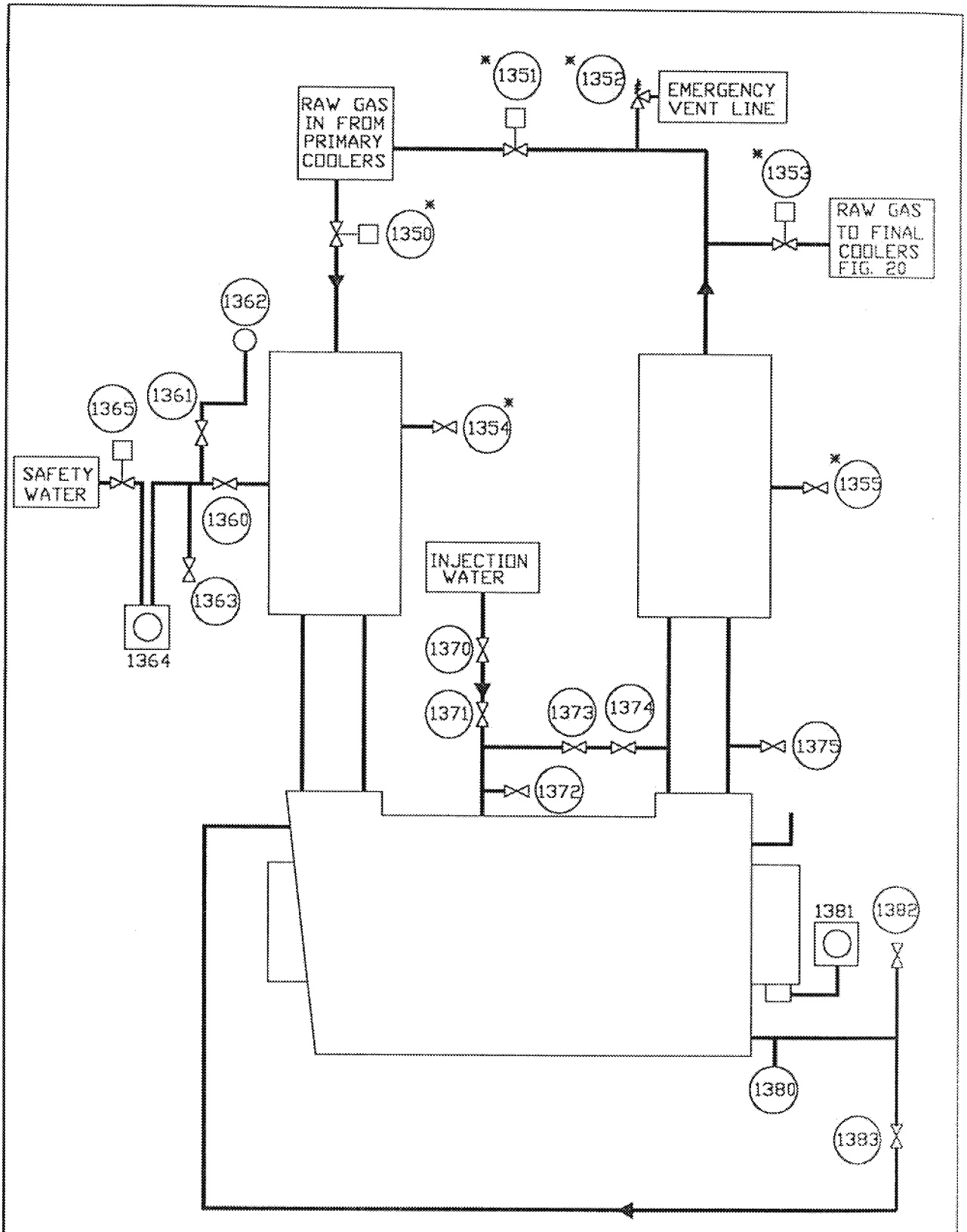

* THESE VALVES NOT ACCESSIBLE

Rev. #1
9/11/96

FIGURE 8

MAIN AXI COMPRESSOR C-135
BY-PRODUCT, CONTROL ROOM #1
USX, CLAIRTON COKE WORKS

ADVANCED TECHNOLOGY SYSTEMS INC.

PREPARED BY	CHECKED BY
AMK	
DATE	PROJECT #
12/11/95	
DWG.	

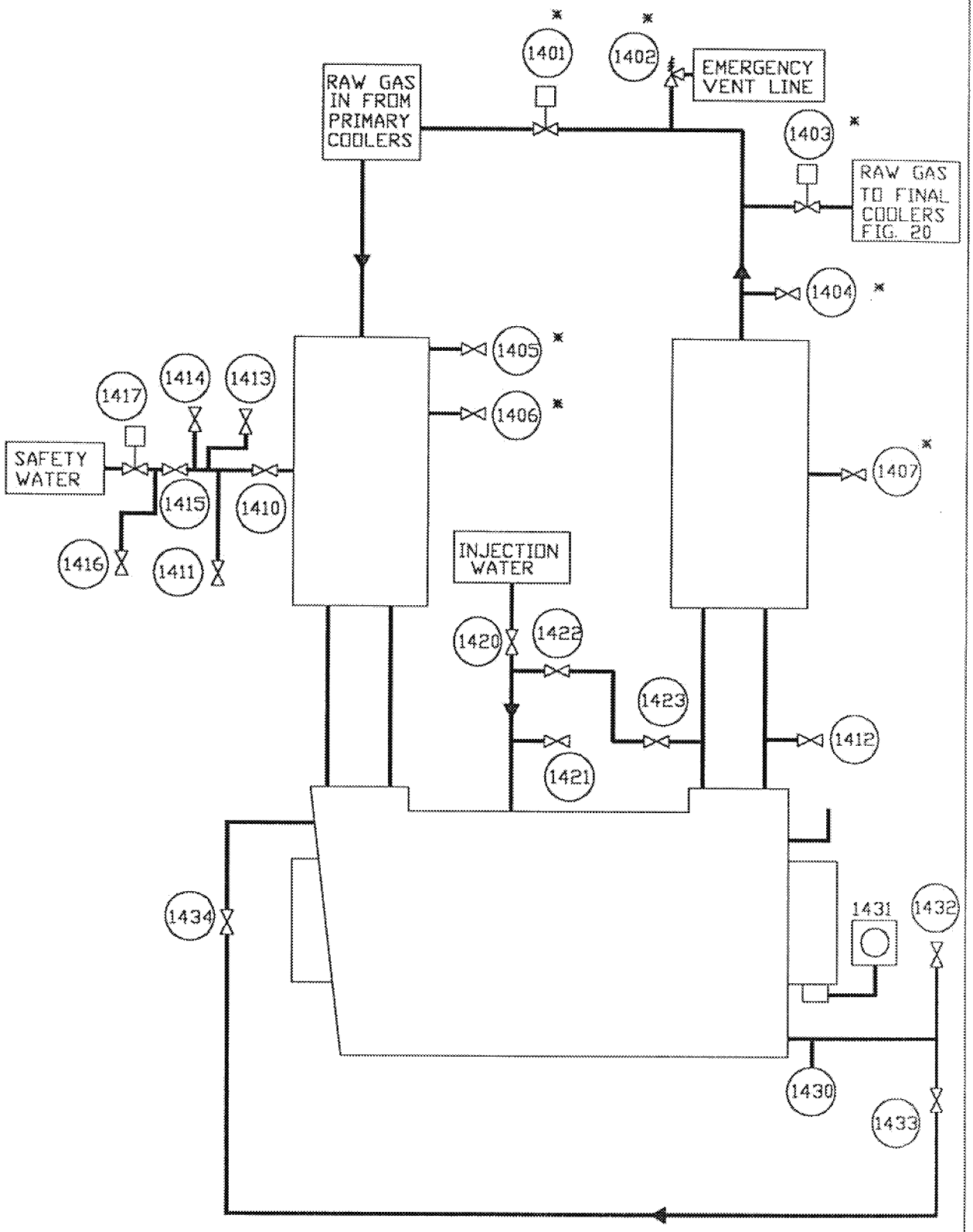

Rev. #1
9/11/96

FIGURE 9

MAIN AXI COMPRESSOR C-140
BY-PRODUCT, CONTROL ROOM #1
USX, CLAIRTON COKE WORKS

ADVANCED TECHNOLOGY SYSTEMS INC.

ATS

PREPARED BY	CHECKED BY
AMK	
DATE	PROJECT #
12/11/95	
DWG.	

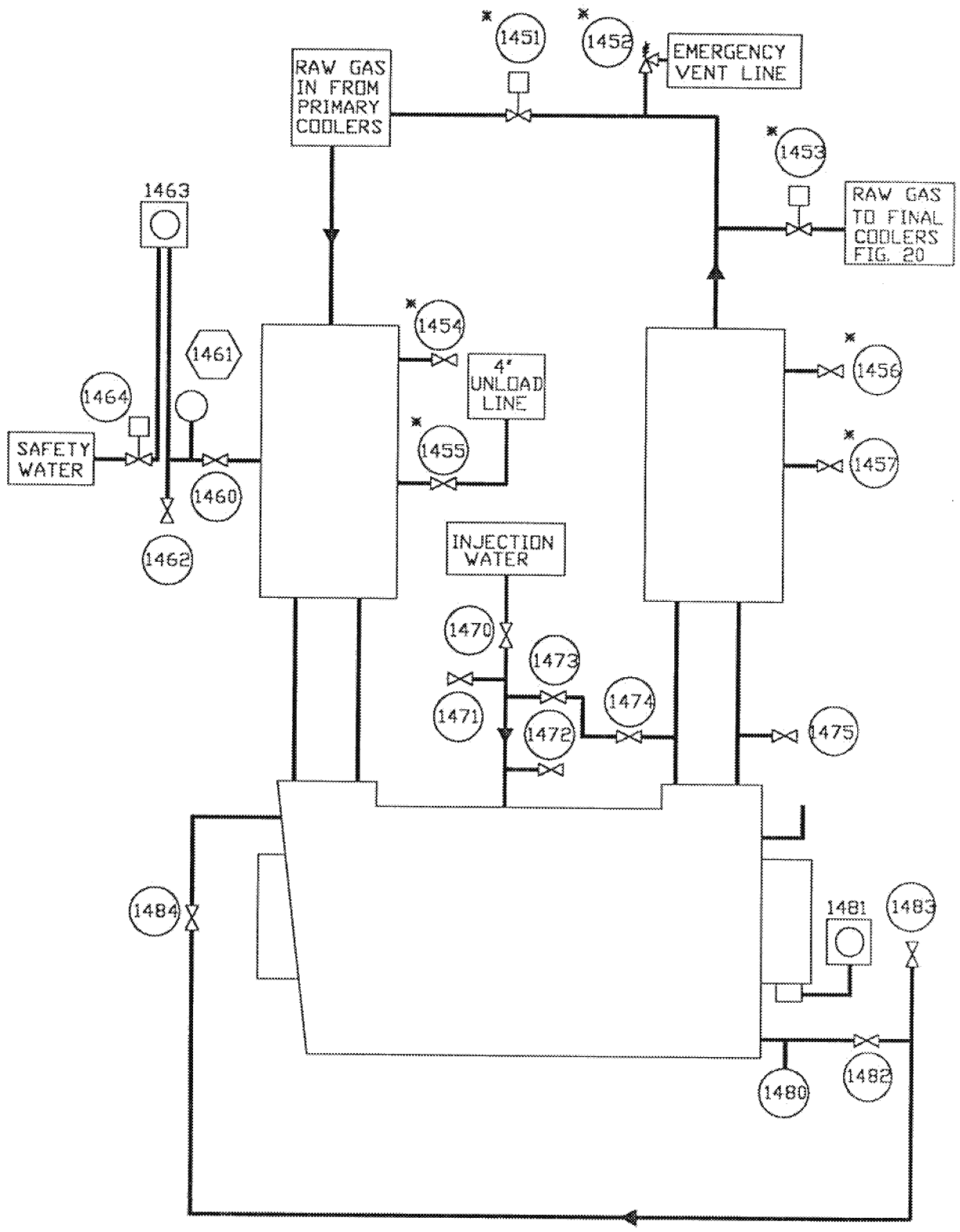

* THESE VALVES NOT ACCESSIBLE

FIGURE 10

MAIN AXI COMPRESSOR C-145
BY-PRODUCT, CONTROL ROOM #1
USX, CLAIRTON COKE WORKS

ADVANCED TECHNOLOGY SYSTEMS INC.

PREPARED BY	CHECKED BY
AMK	
DATE	PROJECT #
12/11/95	
DWG.	

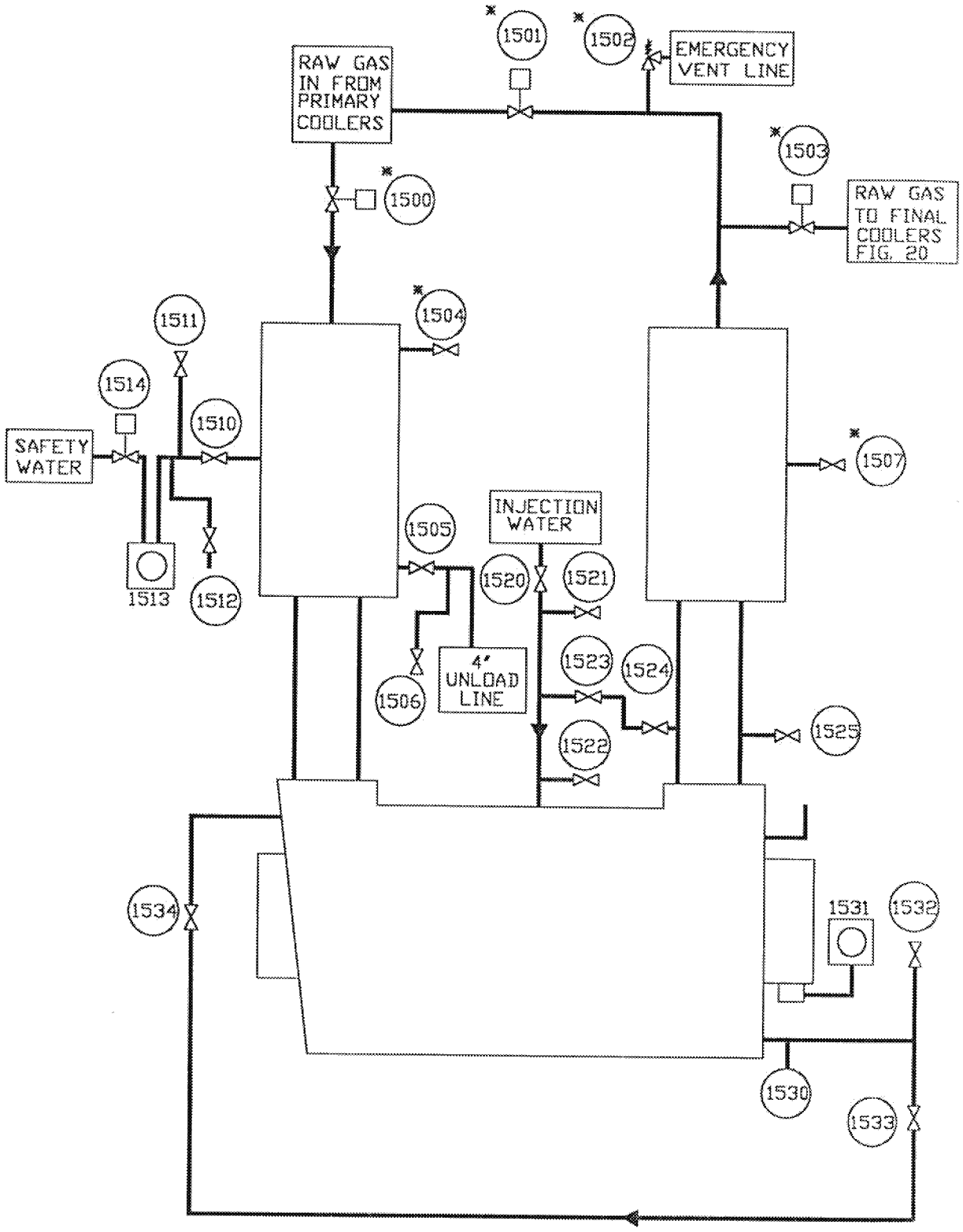

* THESE VALVES NOT ACCESSIBLE

FIGURE 11

MAIN AXI COMPRESSOR C-150
BY-PRODUCT, CONTROL ROOM #1
USX, CLAIRTON COKE WORKS

ADVANCED TECHNOLOGY SYSTEMS INC.

PREPARED BY	CHECKED BY
AMK	
DATE	PROJECT #
12/11/95	
DWG.	

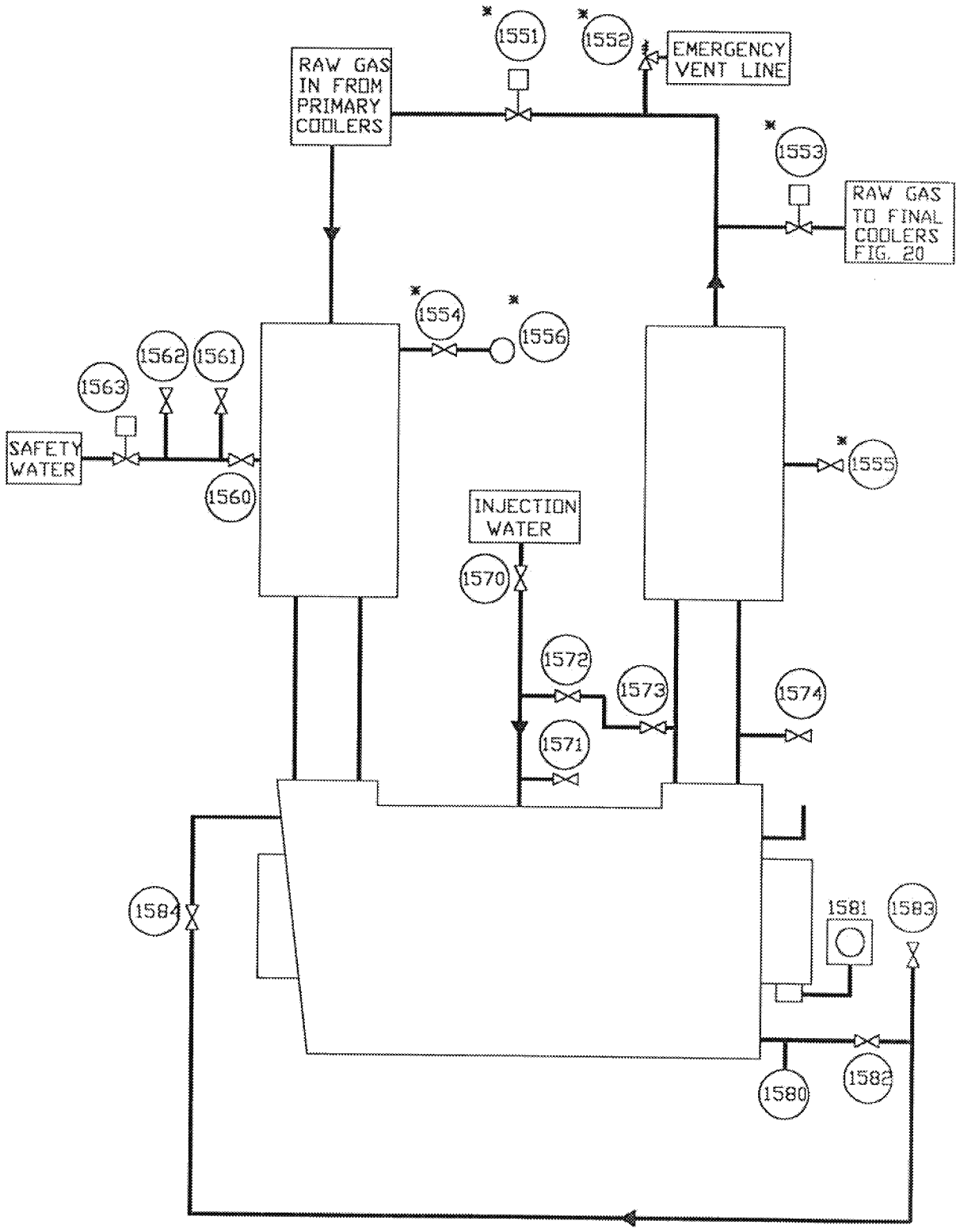

* THESE VALVES NOT ACCESSIBLE

Rev. #1
9/11/96

FIGURE 12

MAIN AXI COMPRESSOR C-155
BY-PRODUCT, CONTROL ROOM #1
USX, CLAIRTON COKE WORKS

ADVANCED TECHNOLOGY SYSTEMS INC.

PREPARED BY	CHECKED BY
AMK	
DATE	PROJECT #
12/11/95	
DWG.	

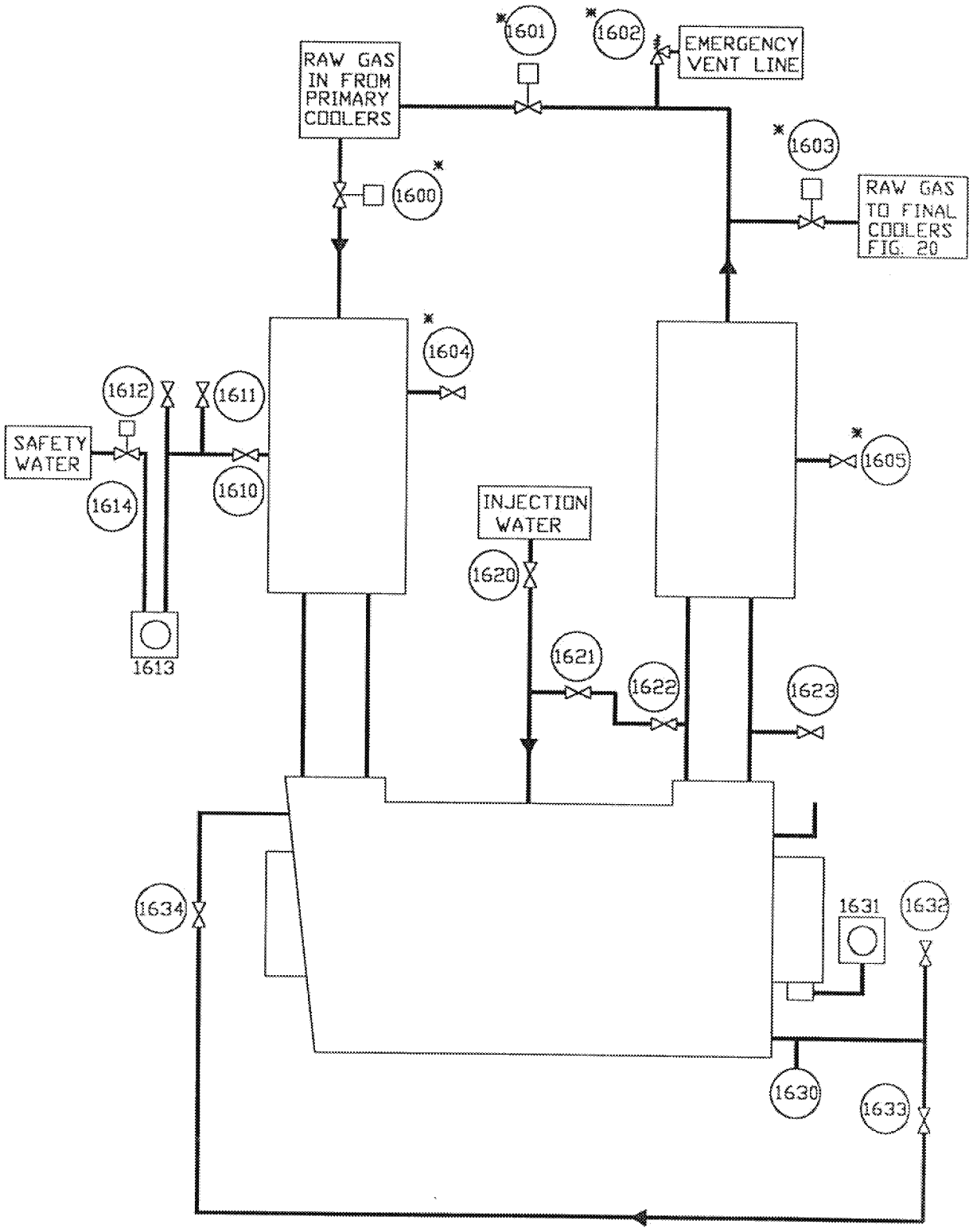

* THESE VALVES NOT ACCESSIBLE

FIGURE 13

MAIN AXI COMPRESSOR C-160
BY-PRODUCT, CONTROL ROOM #1
USX, CLAIRTON COKE WORKS

ADVANCED TECHNOLOGY SYSTEMS INC.

PREPARED BY	CHECKED BY
AMK	
DATE	PROJECT #
12/11/95	
DWG.	

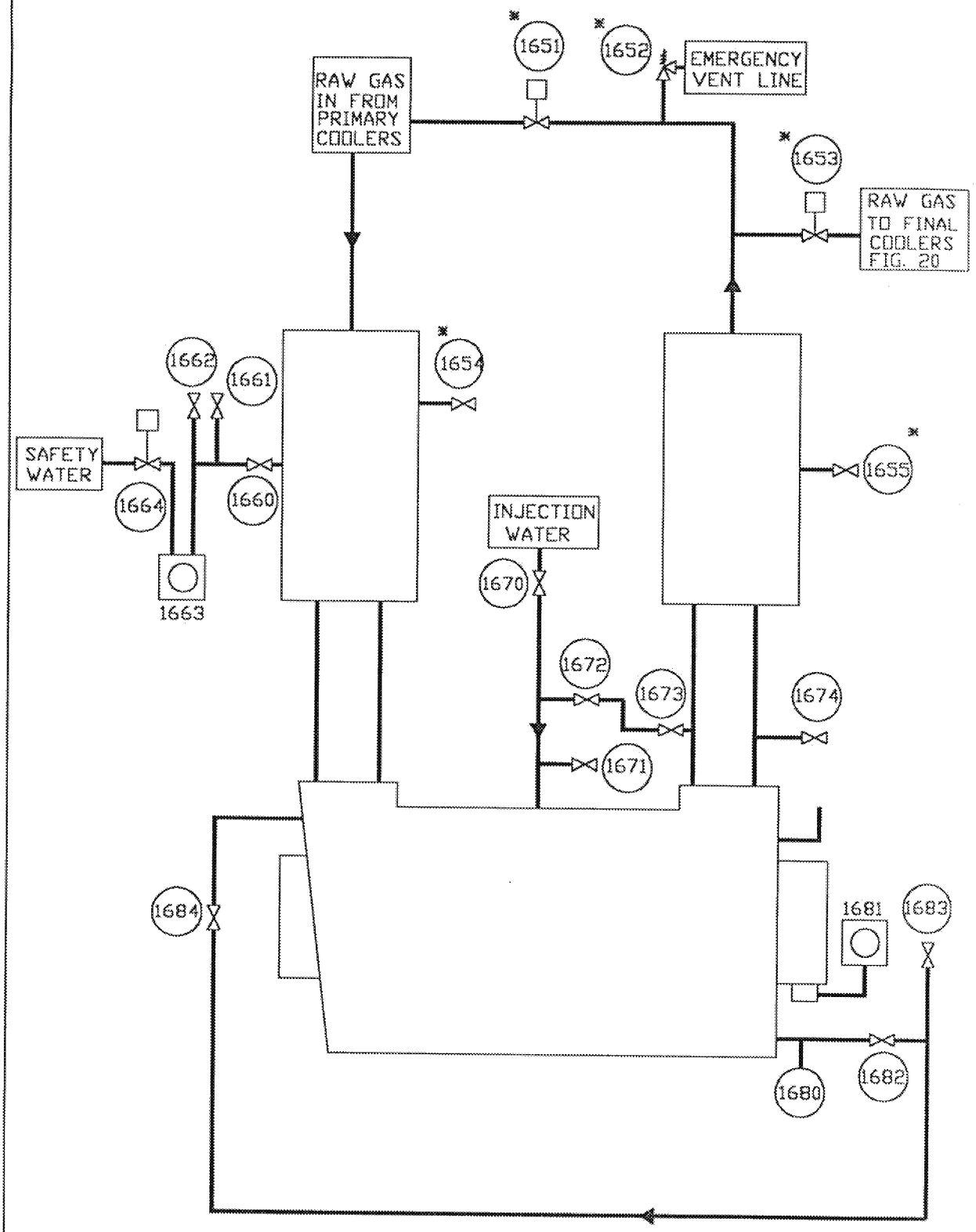

* THESE VALVES NOT ACCESSIBLE

FIGURE 14

MAIN AXI COMPRESSOR C-165
BY-PRODUCT, CONTROL ROOM #1
USX, CLAIRTON COKE WORKS

ADVANCED TECHNOLOGY SYSTEMS INC.

PREPARED BY	CHECKED BY
AMK	
DATE	PROJECT #
12/11/95	
DWG.	

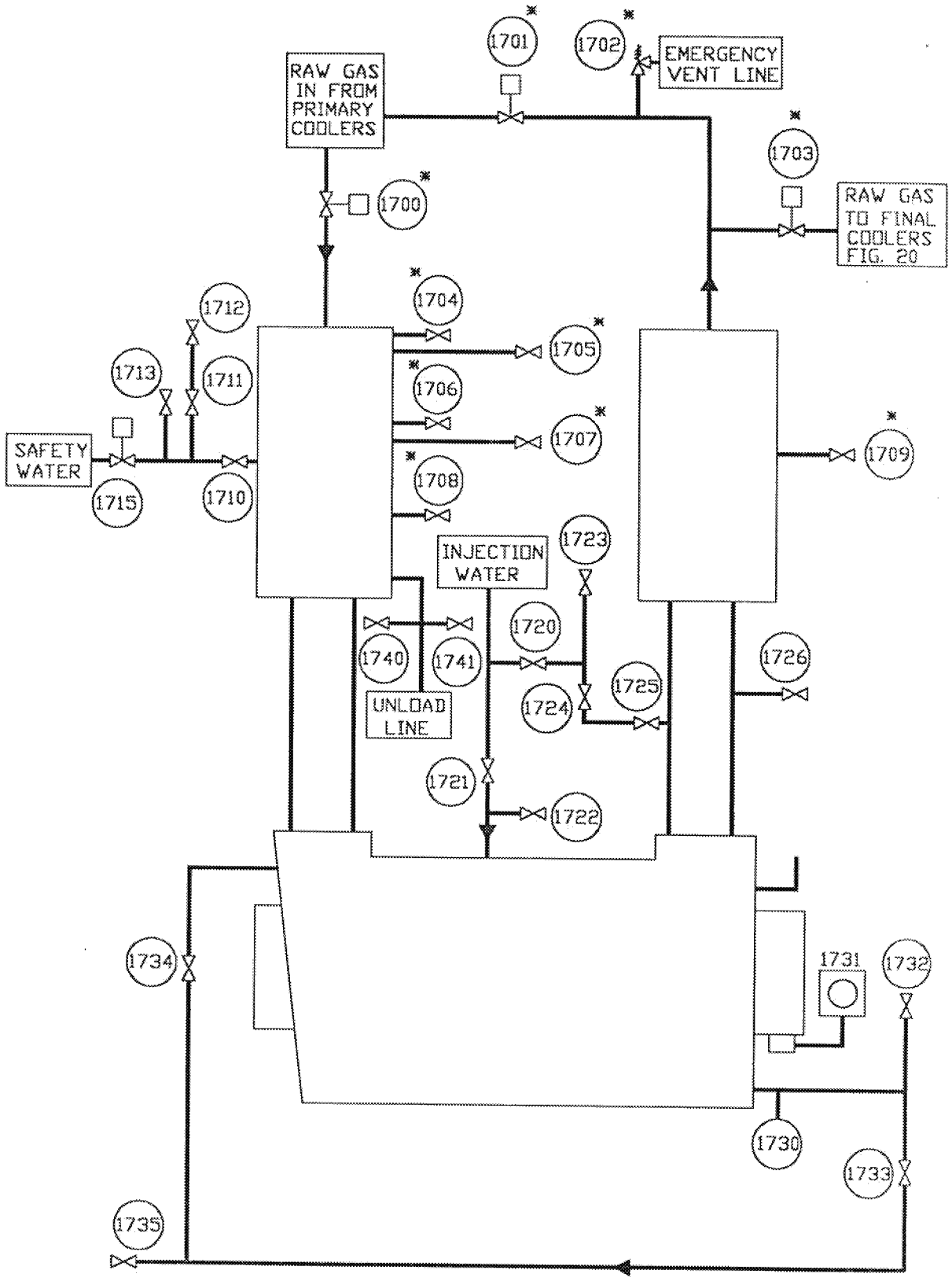

* THESE VALVES NOT ACCESSIBLE

Rev. #1
9/11/96

FIGURE 15

MAIN AXI COMPRESSOR C-170
BY-PRODUCT, CONTROL ROOM #1
USX, CLAIRTON COKE WORKS

ADVANCED TECHNOLOGY SYSTEMS INC.

PREPARED BY	CHECKED BY
AMK	
DATE	PROJECT #
12/12/95	
DWG.	

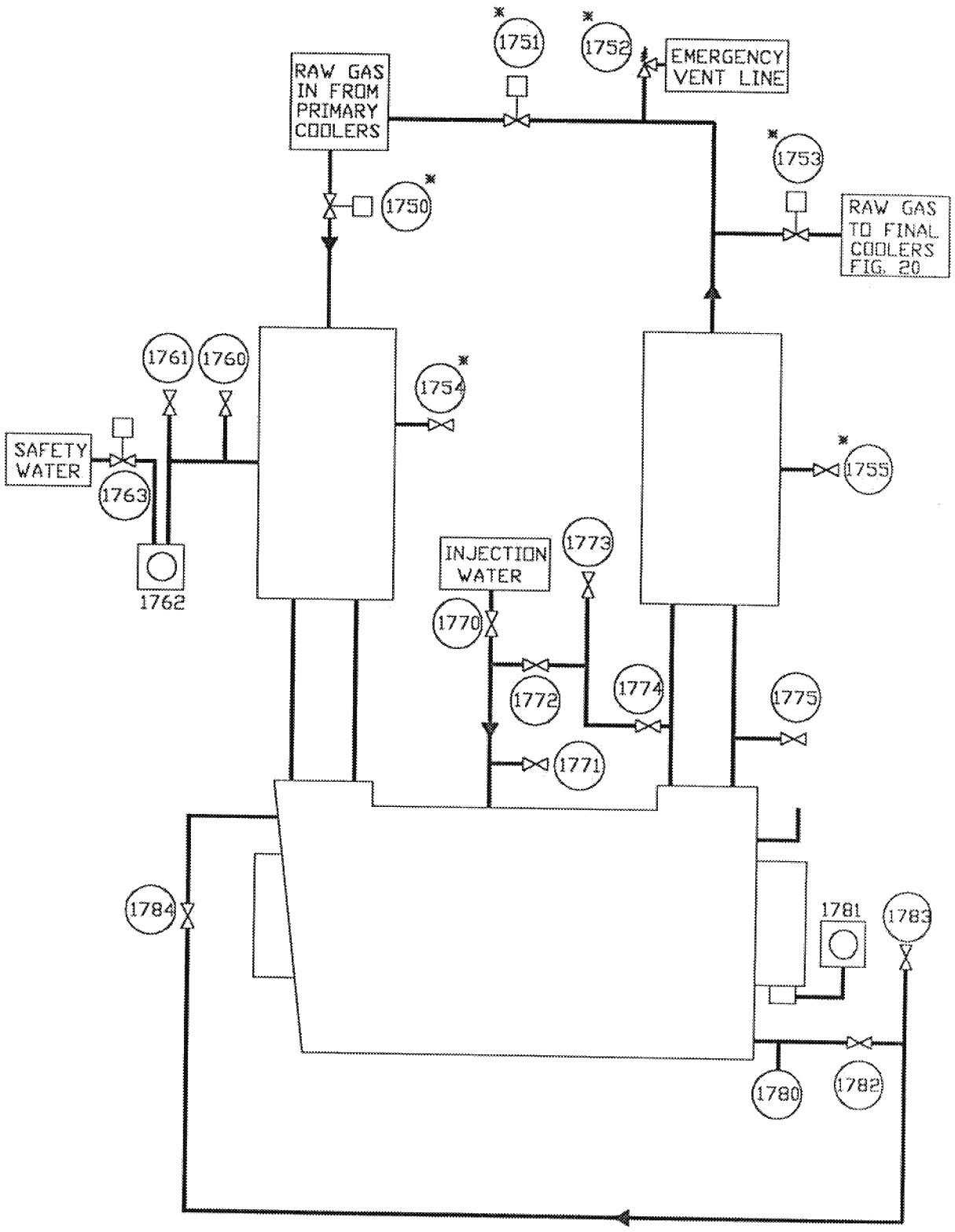

* THESE VALVES NOT ACCESSIBLE

FIGURE 16

MAIN AXI COMPRESSOR C-175
BY-PRODUCT, CONTROL ROOM #1
USX, CLAIRTON COKE WORKS

ADVANCED TECHNOLOGY SYSTEMS INC.

PREPARED BY	CHECKED BY
AMK	
DATE	PROJECT #
12/12/95	
DWG.	

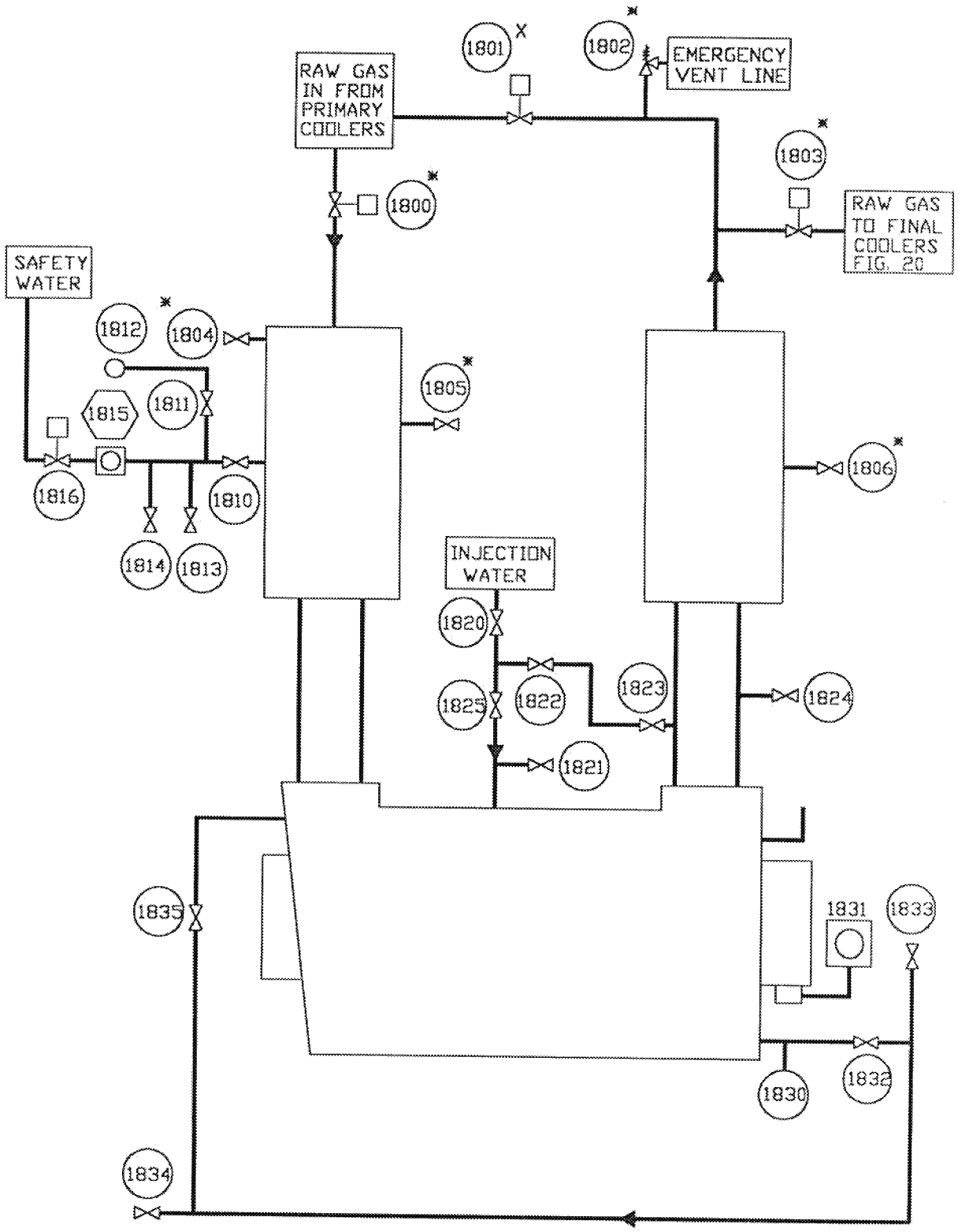

* THESE VALVES NOT ACCESSIBLE

Rev. #1
9/11/96

FIGURE 17

MAIN AXI COMPRESSOR C-180
BY-PRODUCT, CONTROL ROOM #1
USX, CLAIRTON COKE WORKS

ADVANCED TECHNOLOGY SYSTEMS INC.

PREPARED BY	CHECKED BY
AMK	
DATE	PROJECT #
12/12/95	
DWG.	

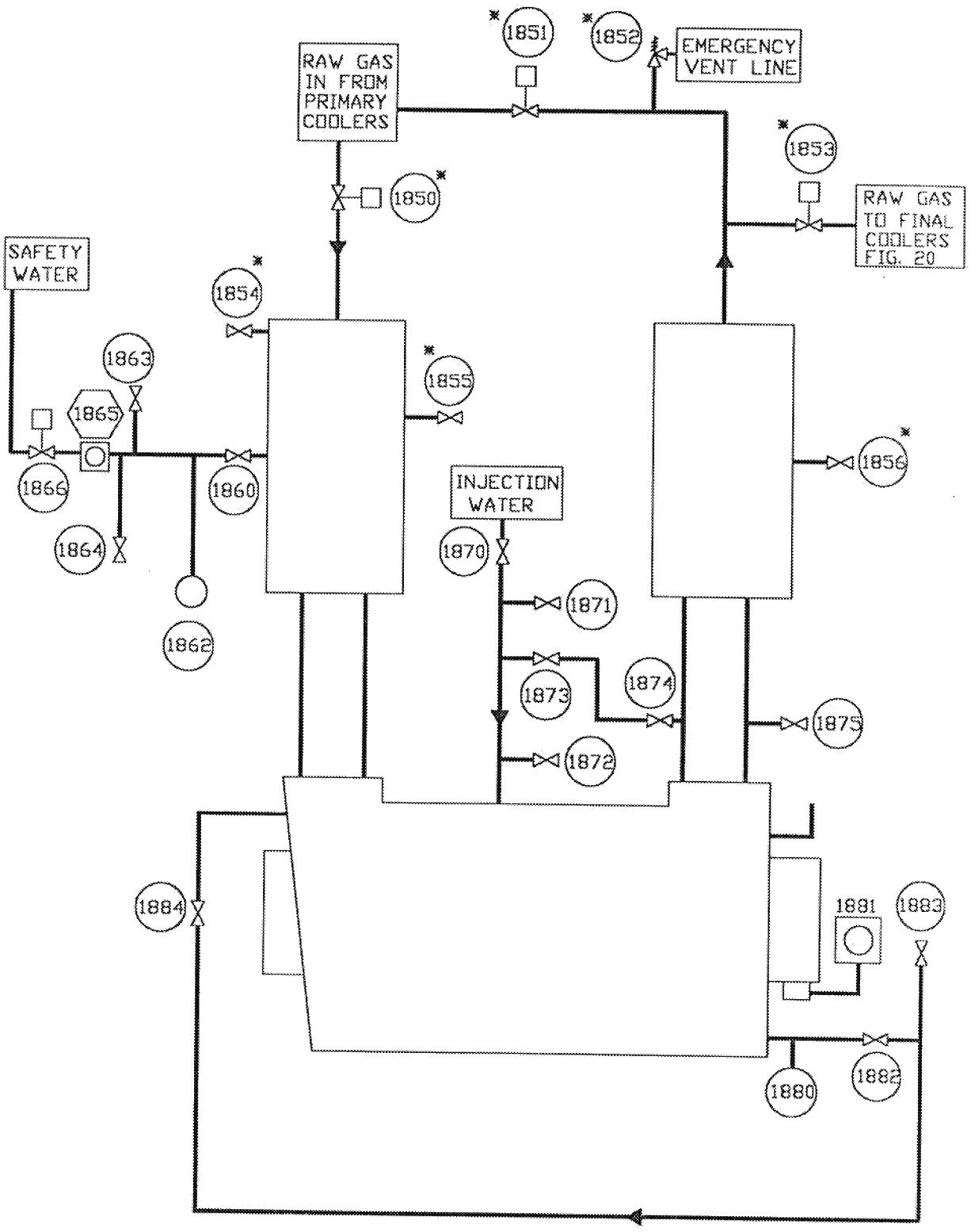

* THESE VALVES NOT ACCESSIBLE

Rev. #1
9/11/96

FIGURE 18

MAIN AXI COMPRESSOR C-185
BY-PRODUCT, CONTROL ROOM #1
USX, CLAIRTON COKE WORKS

ADVANCED TECHNOLOGY SYSTEMS INC.

PREPARED BY	CHECKED BY
AMK	
DATE	PROJECT #
12/12/95	
DWG.	

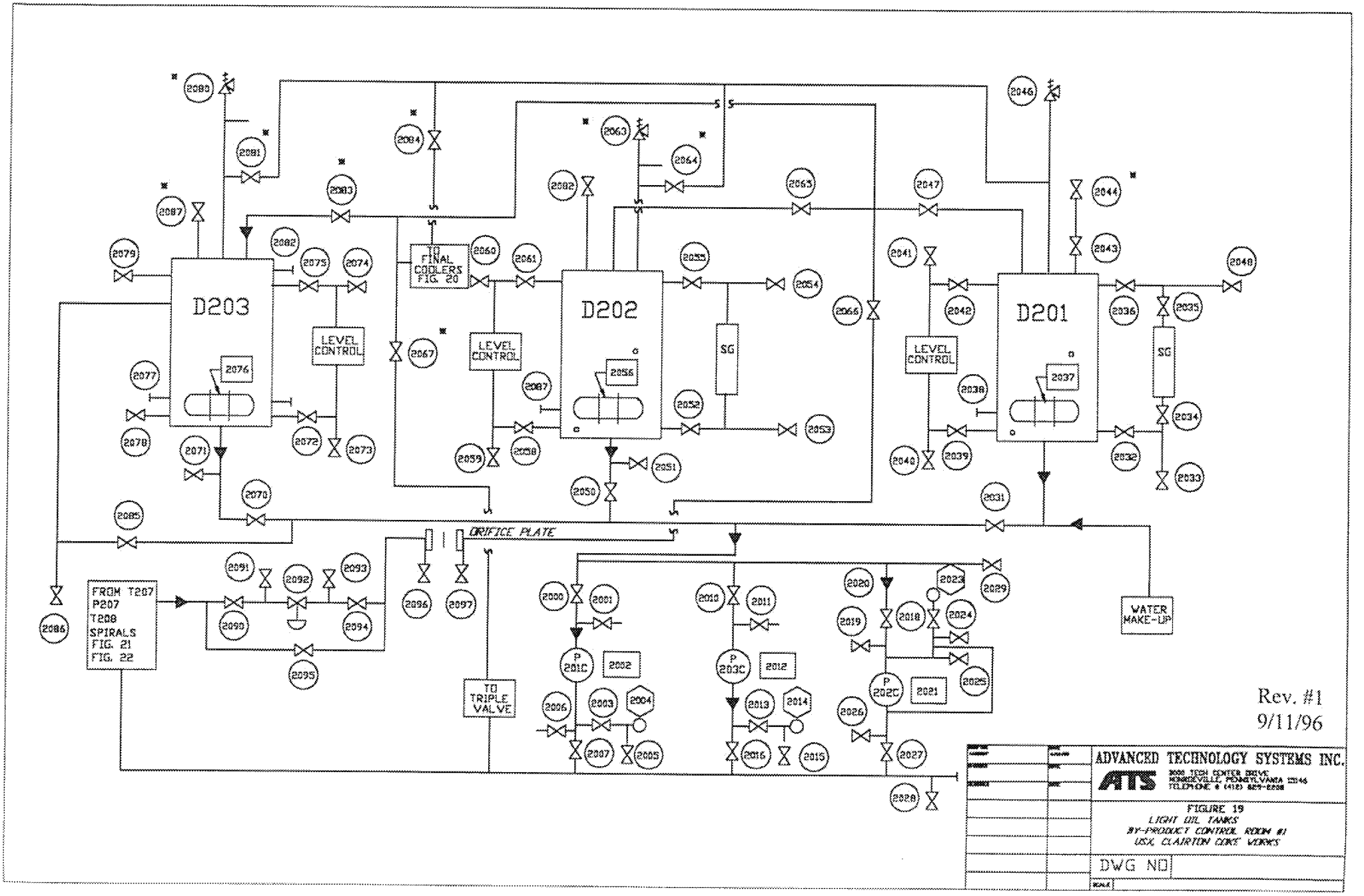
D203
D202
D201
LEVEL CONTROL
LEVEL CONTROL
LEVEL CONTROL
SG
SG
TO FINAL COOLERS FIG. 20
ORIFICE PLATE
FROM T207 P207 T208 SPIRALS FIG. 21 FIG. 22
TO TRIPLE VALVE
WATER MAKE-UP
P 201C
P 203C
P 202C
Rev. #1
9/11/96
ADVANCED TECHNOLOGY SYSTEMS INC.
ATS
FIGURE 19
LIGHT OIL TANKS
BY-PRODUCT CONTROL ROOM #1
USX CLAIRTON COKE WORKS
DWG NO

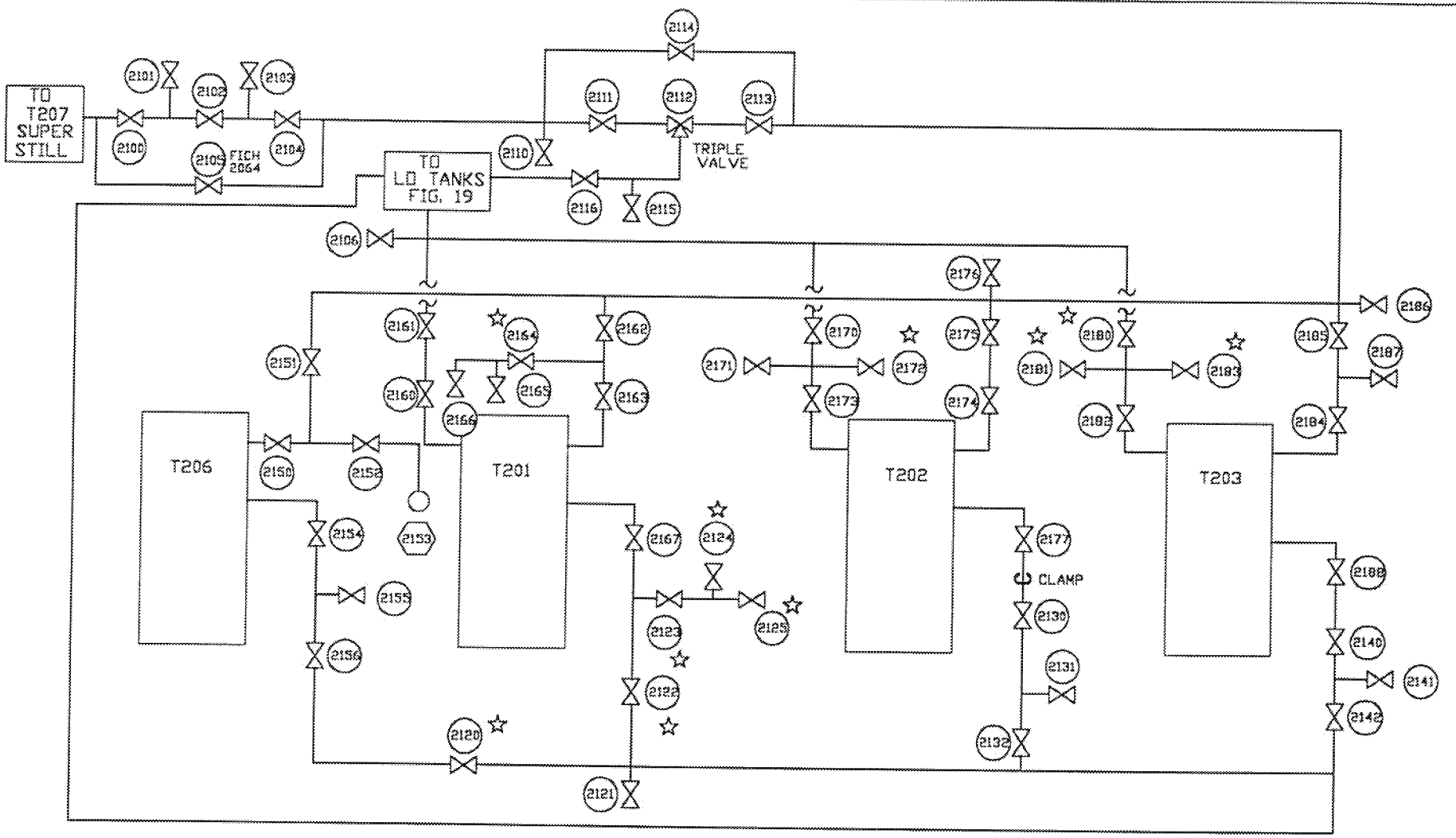

59 - VALVES
1 - TRIPLE VALVE
1 - CLAMP
1 - GAUGE

FROM MAIN AXI'S FIG. 1 TO 18

☆ = NOT ACCESSABLE

ADVANCED TECHNOLOGY SYSTEMS INC.
ATS
3000 TECH CENTER DRIVE
MONROEVILLE, PENNSYLVANIA 15146
TELEPHONE ● (412) 829-2208

FIGURE 20
BY-PRODUCT CONTROL ROOM #1
FINAL COOLERS
USX, CLAIRTON COKE WORKS

DWG NO

SCALE

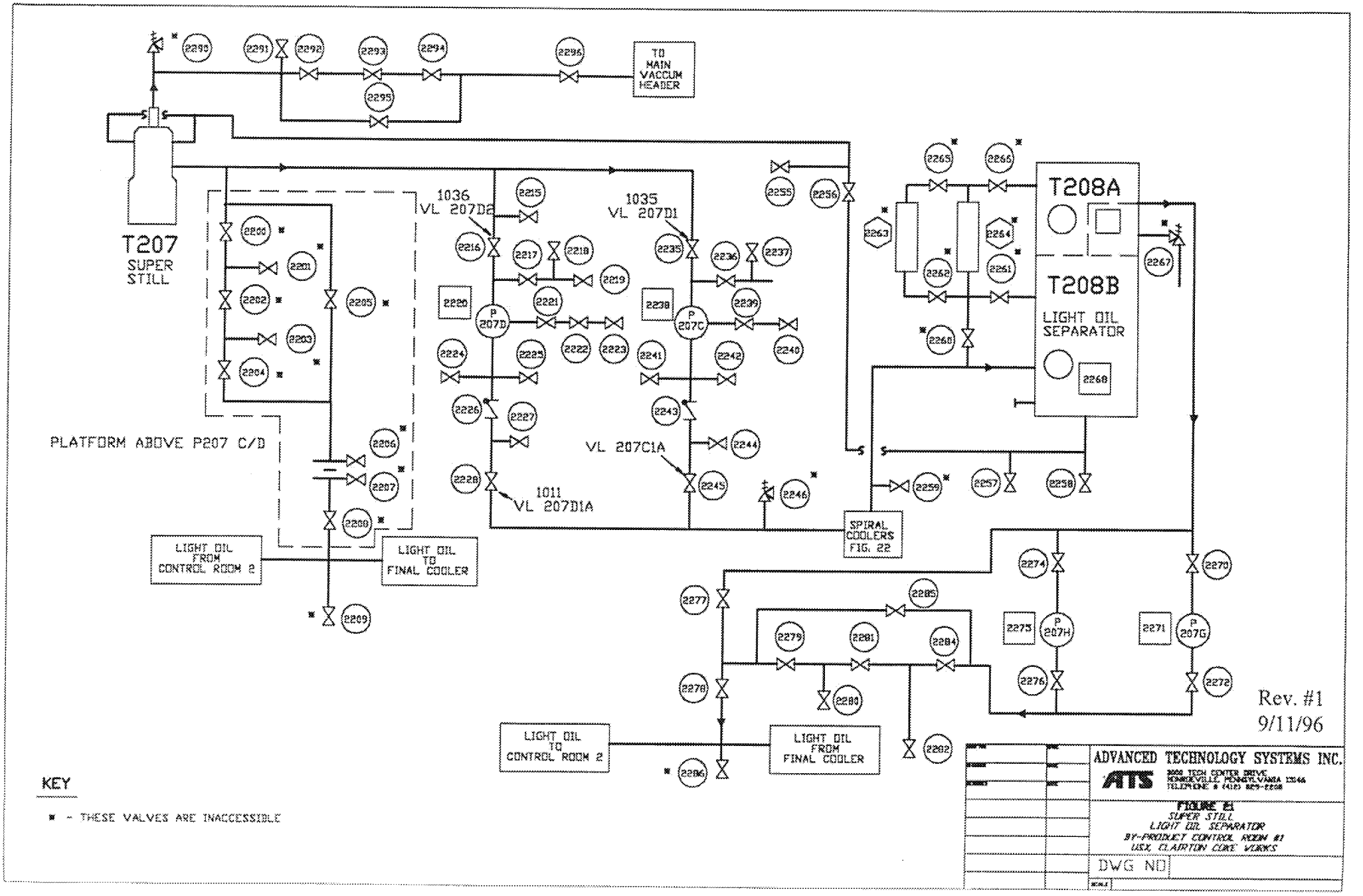
TO MAIN VACCUM HEADER
T207 SUPER STILL
1036 VL 207D2
1035 VL 207D1
VL 207C1A
1011 VL 207D1A
PLATFORM ABOVE P207 C/D
LIGHT OIL FROM CONTROL ROOM 2
LIGHT OIL TO FINAL COOLER
SPIRAL COOLERS FIG. 22
T208A
T208B
LIGHT OIL SEPARATOR
LIGHT OIL TO CONTROL ROOM 2
LIGHT OIL FROM FINAL COOLER
Rev. #1
9/11/96
KEY
* - THESE VALVES ARE INACCESSIBLE
ADVANCED TECHNOLOGY SYSTEMS INC.
ATS
FIGURE #1
SUPER STILL
LIGHT OIL SEPARATOR
BY-PRODUCT CONTROL ROOM #1
USX, CLAIRTON COKE WORKS
DWG NO

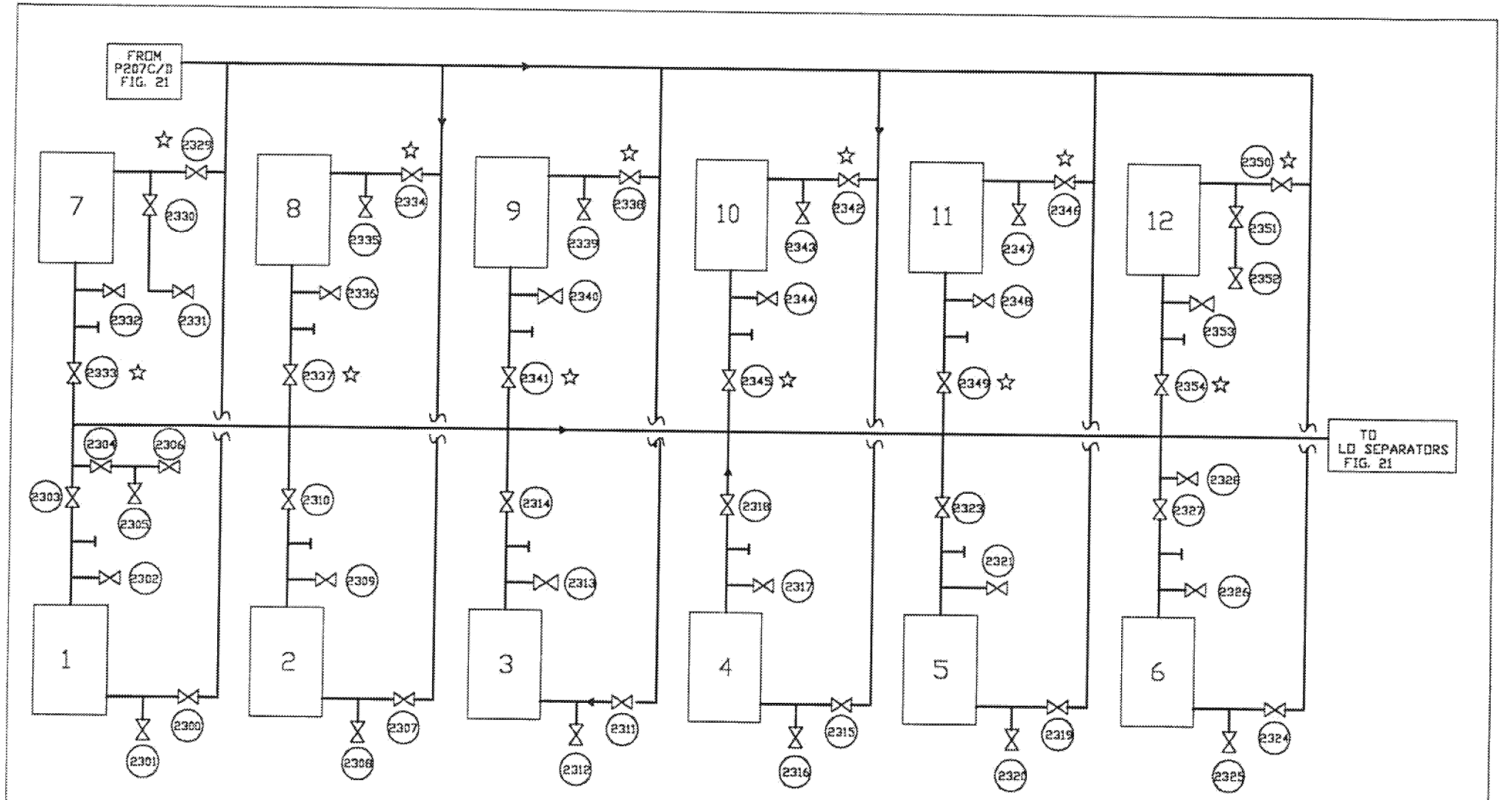

ED_002508A_00001340-00033

FIGURE 23

AXI C-500
TWO STAGE
BY-PRODUCT CONTROL ROOM #2
USX, CLAIRTON COKE WORKS

ADVANCED TECHNOLOGY SYSTEMS INC.

PREPARED BY	CHECKED BY
AMK	
DATE	PROJECT #
11/17/95	
DWG.	

Rev. #1
9/11/96

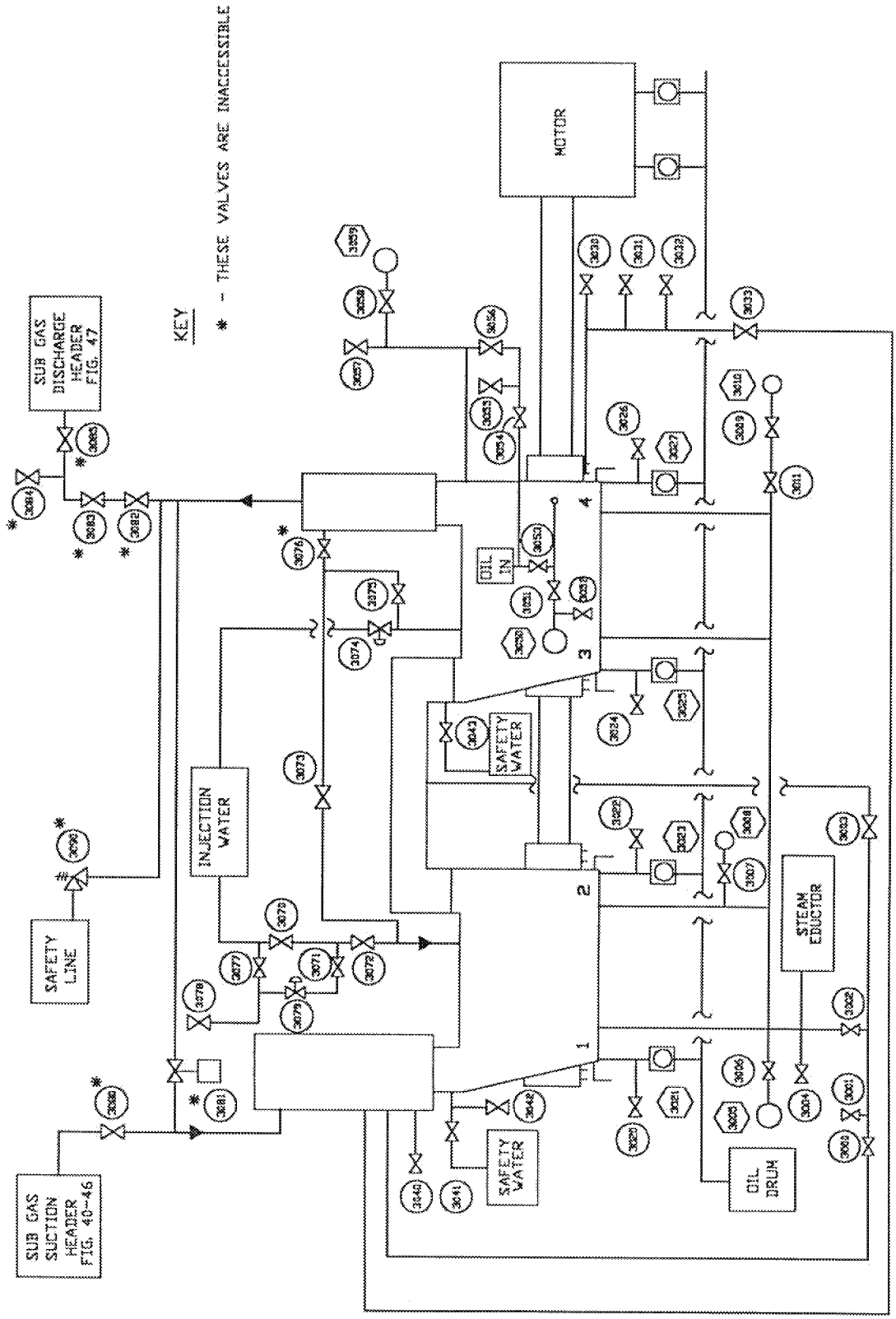

FIGURE 24

AXI C-503
TWO STAGE
BY-PRODUCT CONTROL ROOM #1
USX, CLAIRTON COKE WORKS

ADVANCED TECHNOLOGY SYSTEMS INC.

PREPARED BY	CHECKED BY
AMK	
DATE	PROJECT #
12/12/95	
DWG.	

Rev. #1
9/11/96

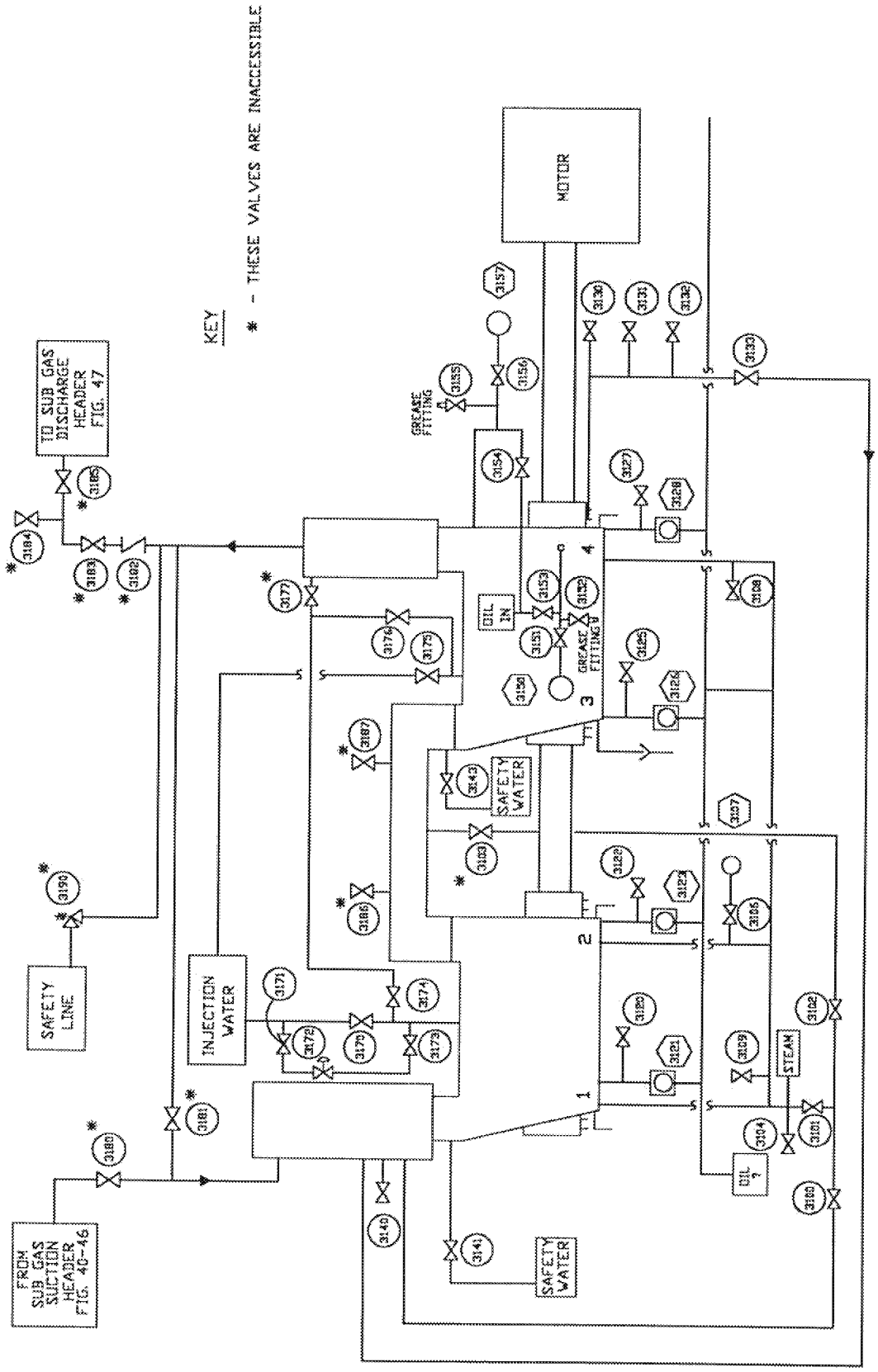

FIGURE 25

AXI C-506
TWO STAGE
BY-PRODUCT CONTROL ROOM #1
USX CLAIRTON COKE WORKS

ADVANCED TECHNOLOGY SYSTEMS INC.

PREPARED BY	CHECKED BY
AMK	
DATE	PROJECT #
12/12/95	
DWG.	

Rev. #1
9/11/96

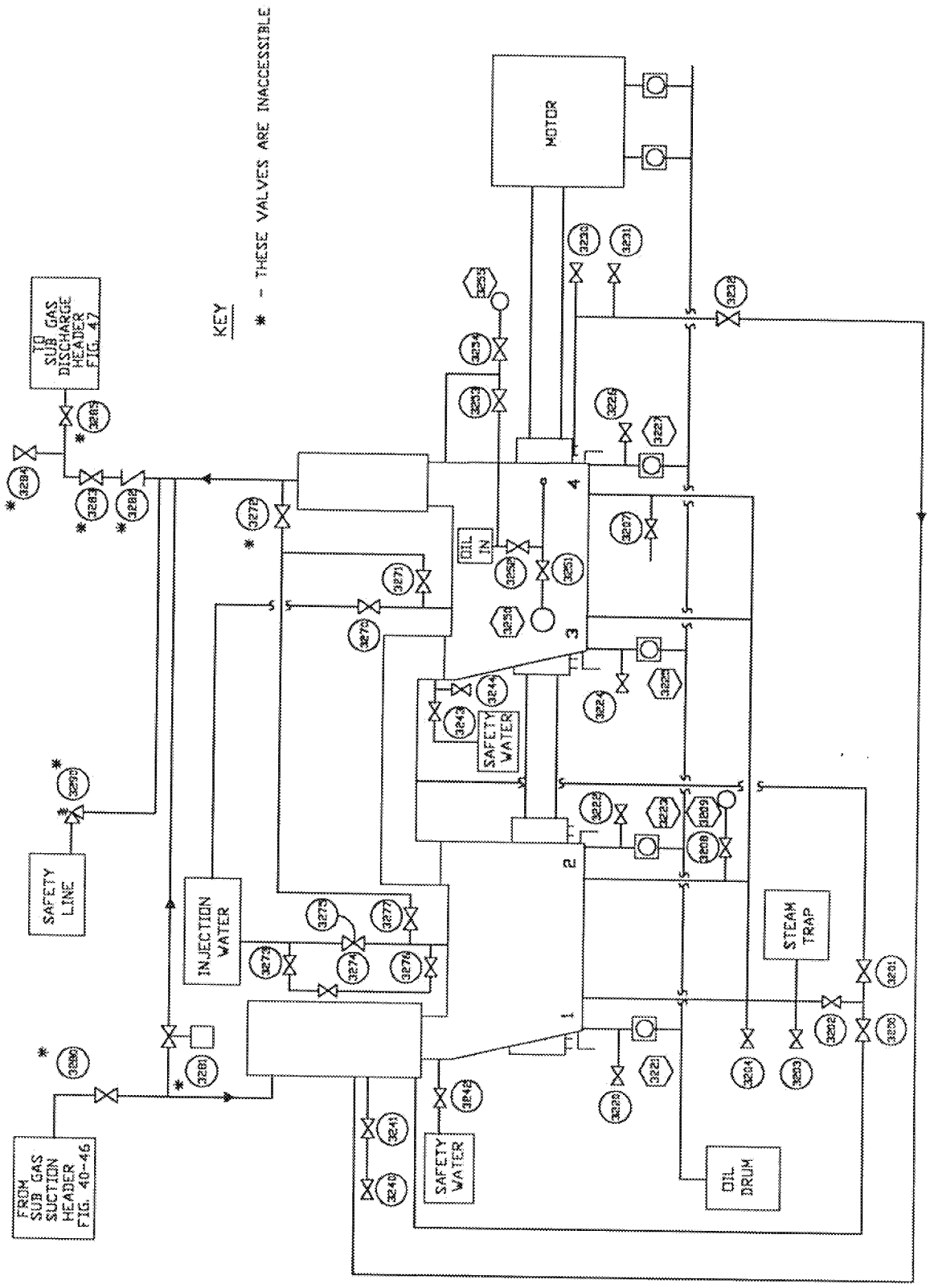

FIGURE 26

AXI C-509
TWO STAGE
BY-PRODUCT CONTROL ROOM #1
USX, CLAIRTON COKE WORKS

ADVANCED TECHNOLOGY SYSTEMS INC.

PREPARED BY	CHECKED BY
AMK	
DATE	PROJECT #
10/30/95	
DWG.	

Rev. #1
9/11/96

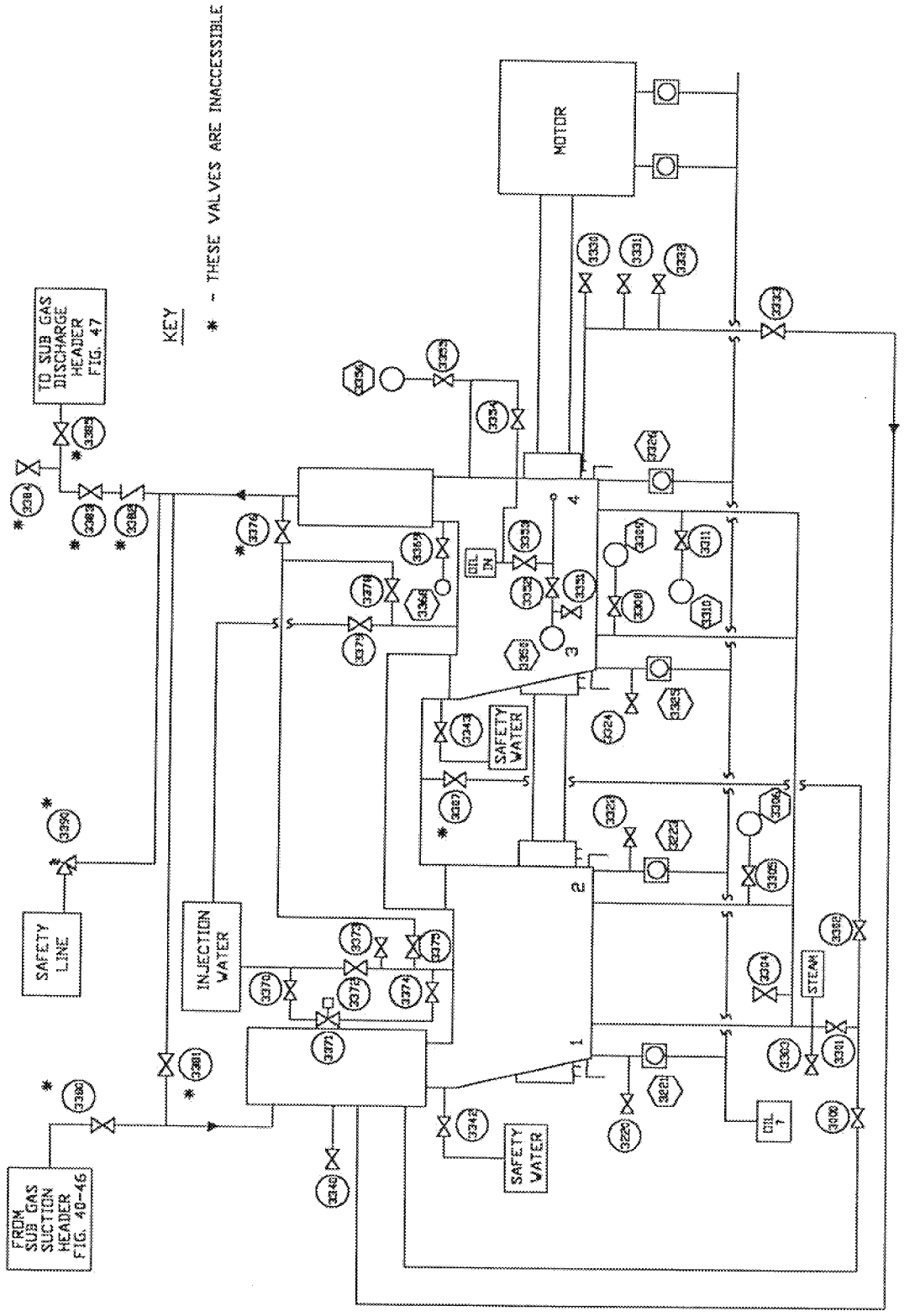

FIGURE 27

AX1 C512
TWO STAGE
BY-PRODUCT CONTROL ROOM #1
USX, CLAIRTON COKE WORKS

ADVANCED TECHNOLOGY SYSTEMS INC.

ATS

PREPARED BY	CHECKED BY
AMK	
DATE	PROJECT #
12/13/95	
DWG.	

Rev. #1
9/11/96

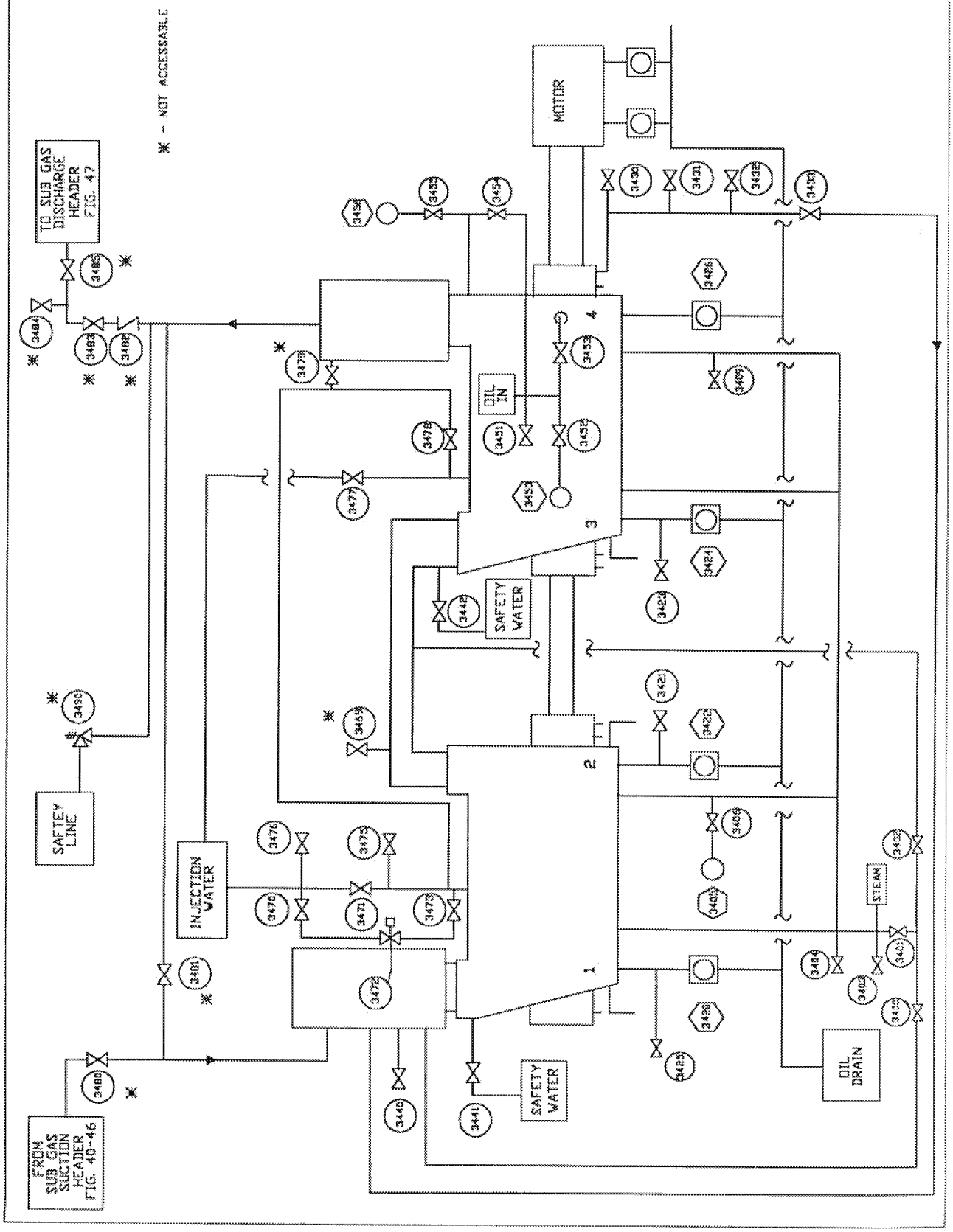

FIGURE 28

AX1 C515
TWO STAGE
BY-PRODUCT CONTROL ROMM #1
USX, CLAIRTON COKE WORKS

ADVANCED TECHNOLOGY SYSTEMS INC.

PREPARED BY	CHECKED BY
AMK	
DATE	PROJECT #
12/13/95	
DWG.	

Rev. #1
9/11/96

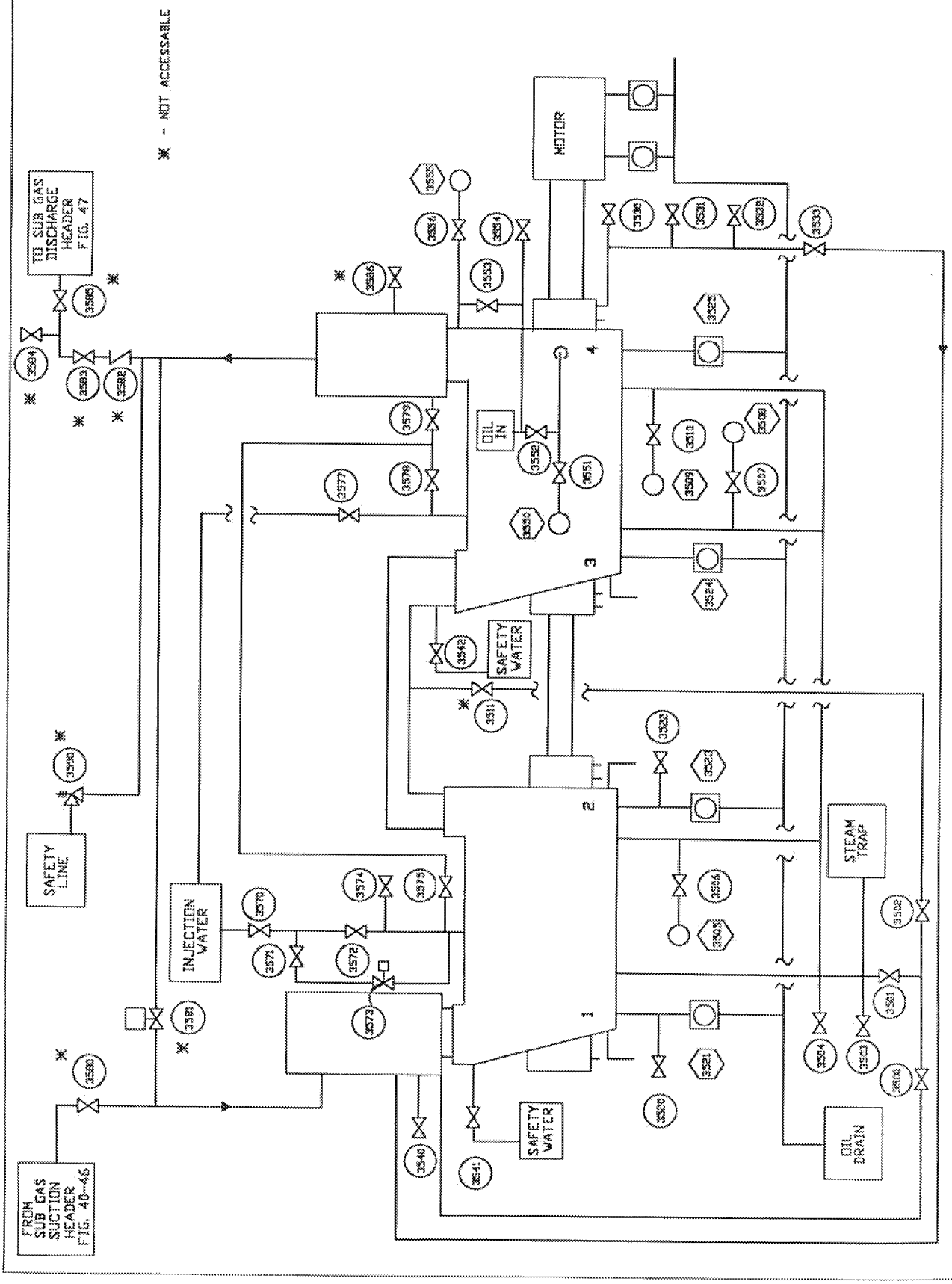

FIGURE 29

AXI C-518
TWO STAGE
BY-PRODUCT CONTROL ROOM #1
USX, CLAIRTON COKE WORKS

ADVANCED TECHNOLOGY SYSTEMS INC.

PREPARED BY	CHECKED BY
AMK	
DATE	PROJECT #
12/13/95	
DWG.	

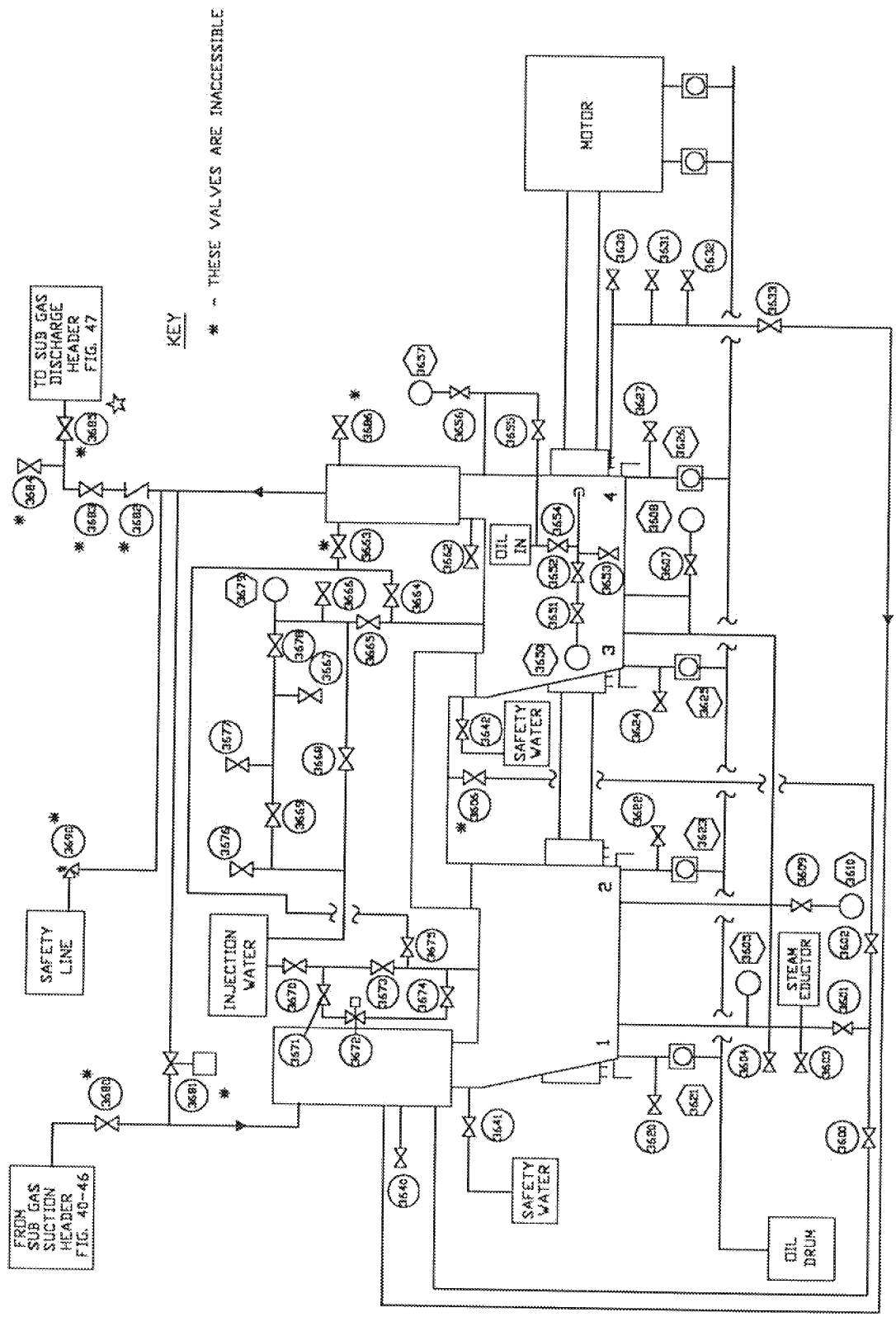

FIGURE 30

AXI C521
TWO STAGE
BY-PRODUCT CONTROL ROOM #1
USX, CLAIRTON COKE WORKS

ADVANCED TECHNOLOGY SYSTEMS INC.

PREPARED BY	CHECKED BY
AMK	
DATE	PROJECT #
12/14/95	
DWG.	

Rev. #1
9/11/96

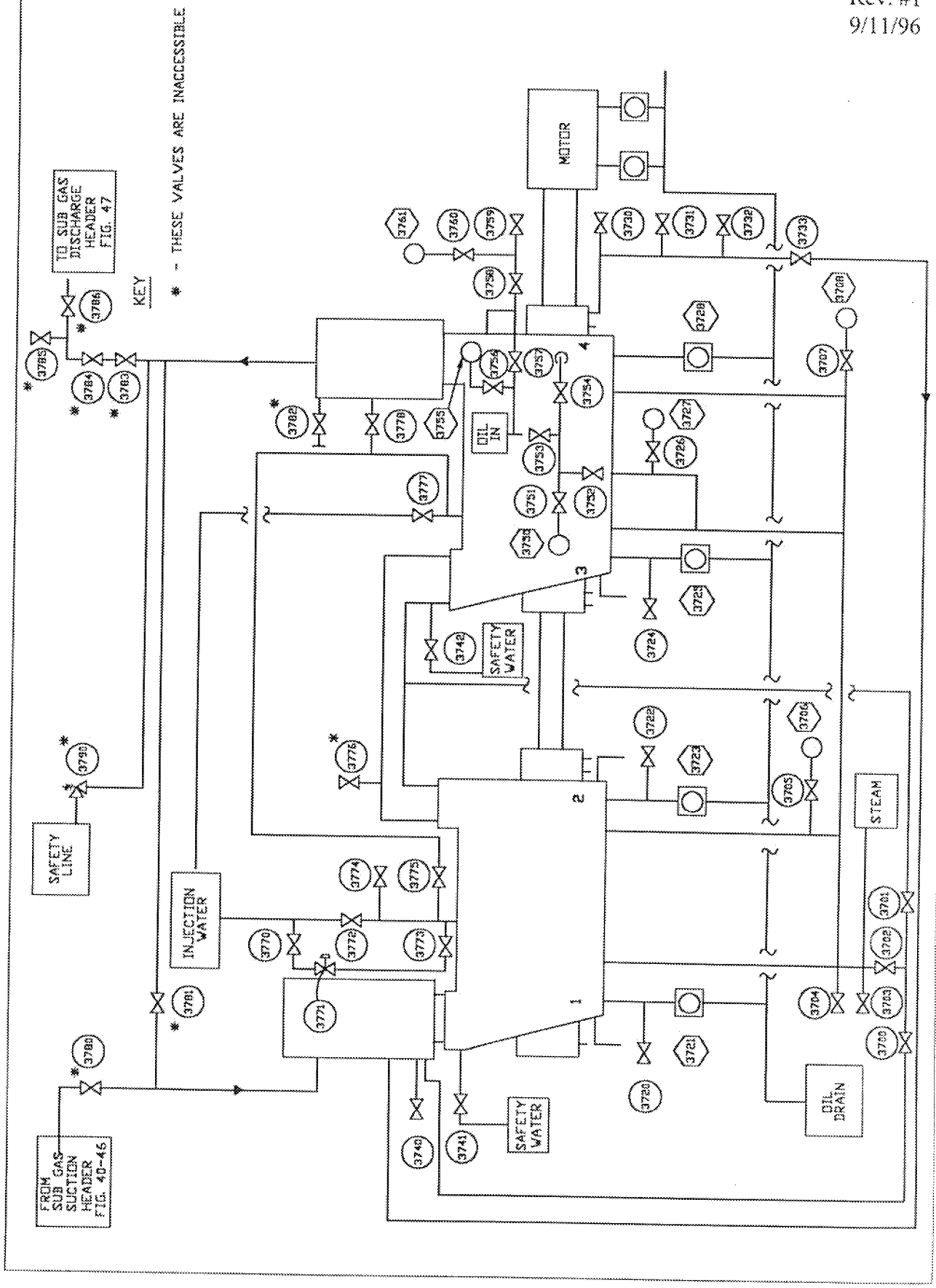

FIGURE 31

AXI C524
TWO STAGE
BY-PRODUCT CONTROL ROOM #1
USX, CLAIRTON COKE WORKS

ADVANCED TECHNOLOGY SYSTEMS INC.

PREPARED BY	CHECKED BY
AMK	
DATE	PROJECT #
12/15/95	
DWG.	

Rev. #1
9/11/96

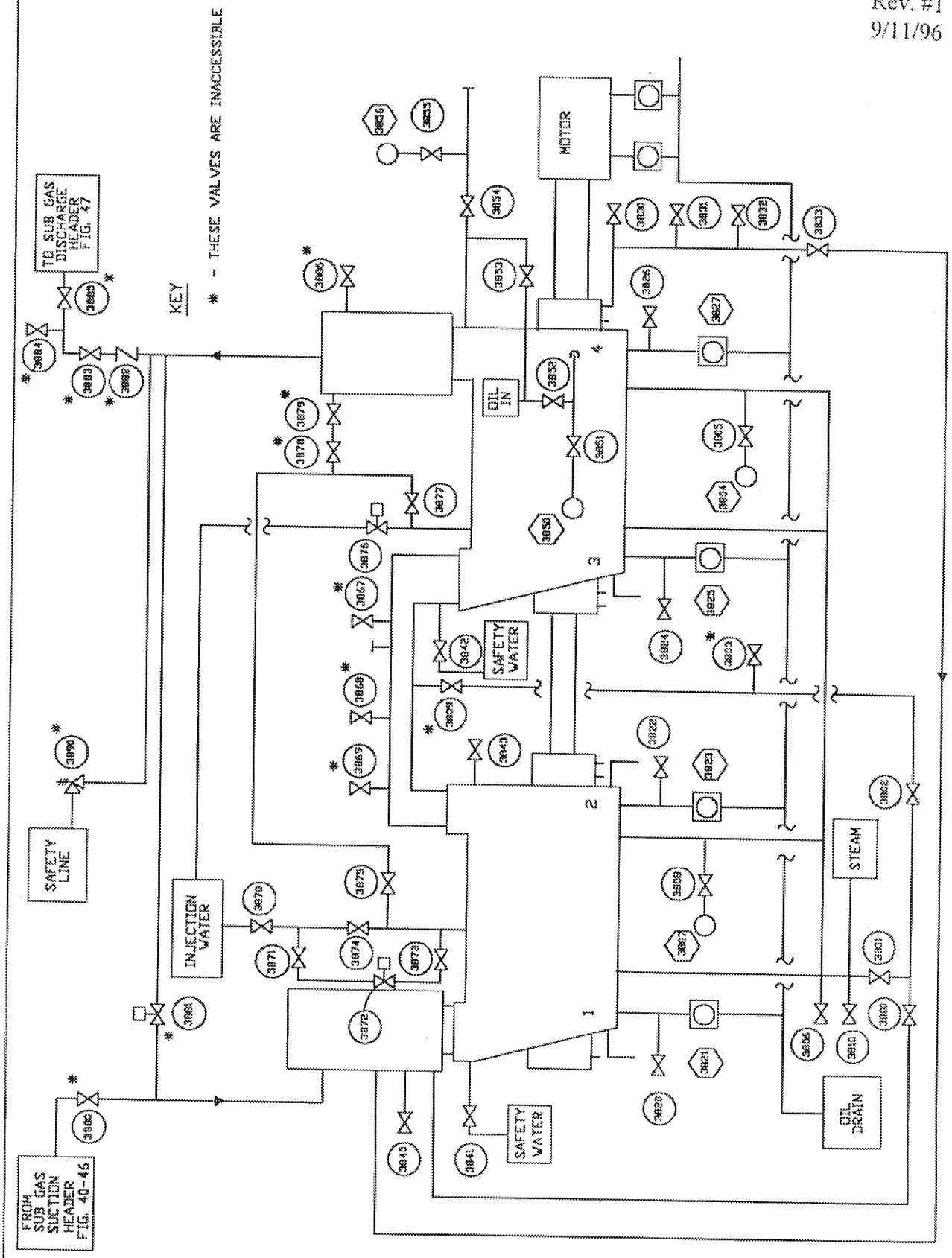

FIGURE 32

AXI C527
TWO STAGE
BY-PRODUCT CONTROL ROOM #1
USX, CLAIRTON COKE WORKS

ADVANCED TECHNOLOGY SYSTEMS INC.

PREPARED BY	CHECKED BY
AMK	
DATE	PROJECT #
12/14/95	
DWG.	

Rev. #1
9/11/96

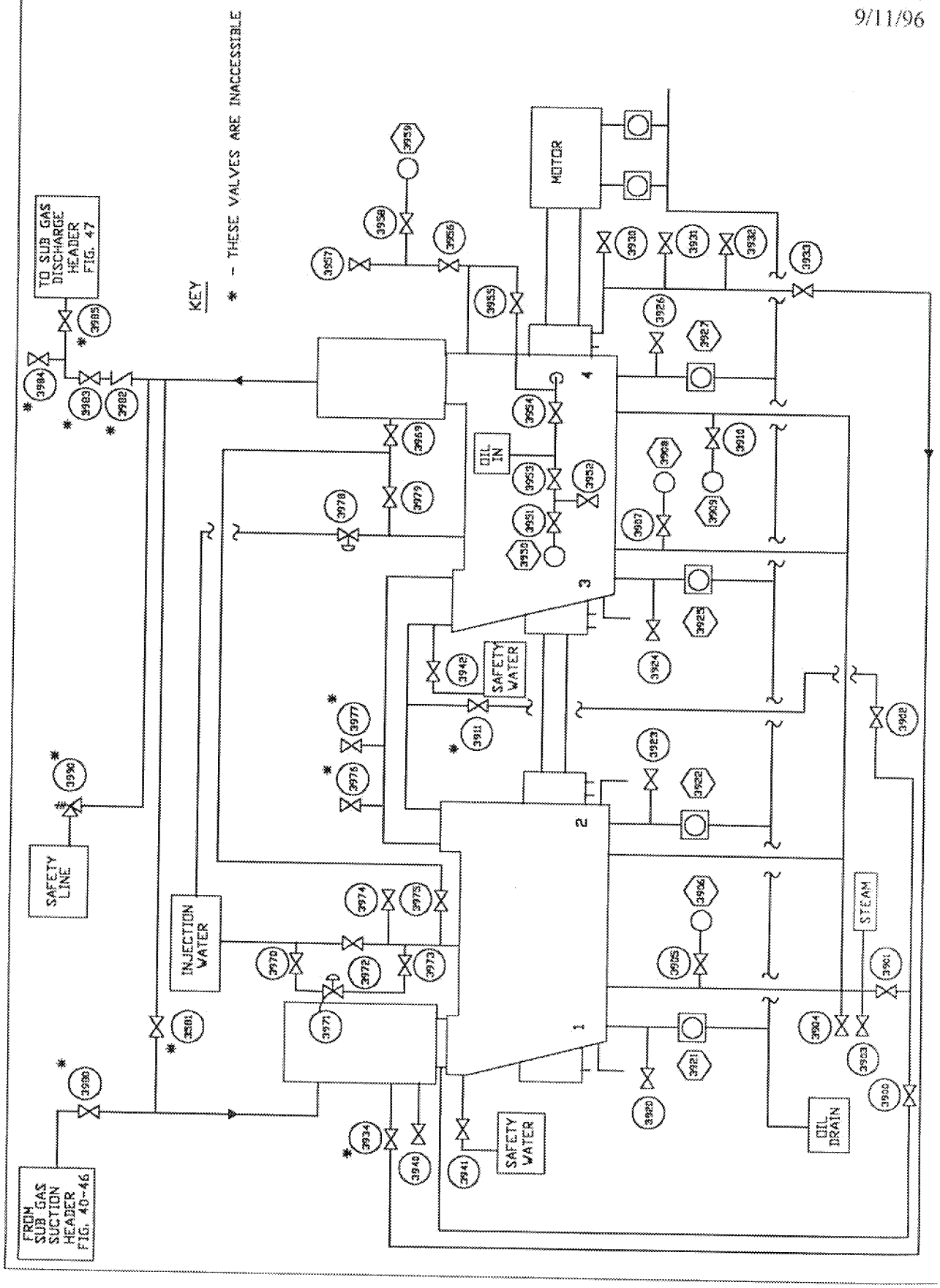

FIGURE 33

AXI C530
TWO STAGE
BY-PRODUCT CONTROL ROOM #1
USX, CLAIRTON COKE WORKS

ADVANCED TECHNOLOGY SYSTEMS INC.

PREPARED BY	CHECKED BY
AMK	
DATE	PROJECT #
12/14/95	
DWG.	
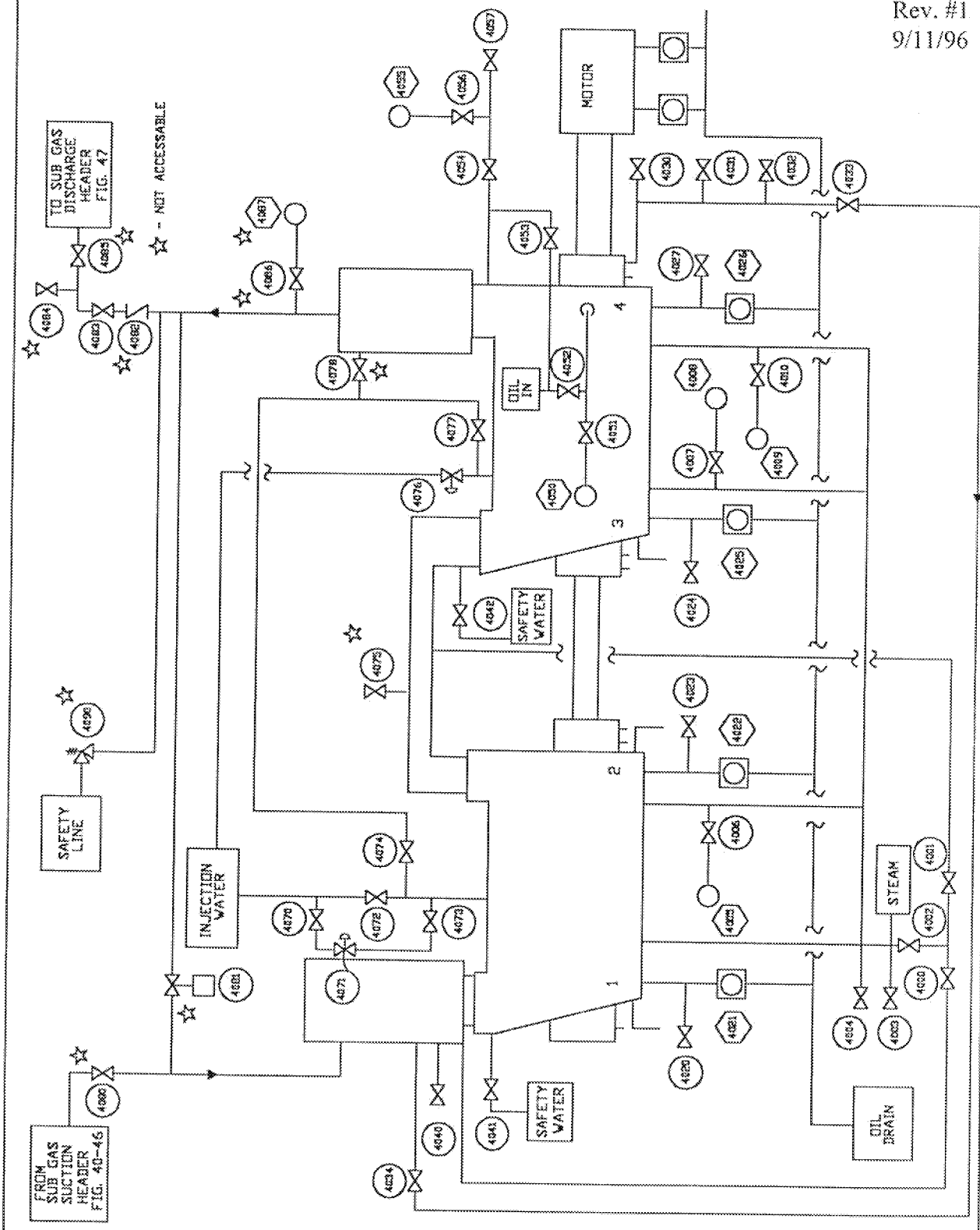
Rev. #1
9/11/96