UNITED STATES STEEL CORPORATION
CLAIRTON WORKS
CLAIRTON, PENNSYLVANIA

Measurement of
Filterable Particulate Matter and PM_{10} Emissions
From No. 3 Screening Station Baghouse
At U.S. Steel - Clairton Works – Clairton, PA
Per Allegheny County (PA) Health Department -
Air Quality Program - Installation Permit No. 0052 – I003
Compliance Test Program – October 9, 2003

November 2003

APPENDIX

Process Operational Data, Field Data Sheets, Equipment Calibration Data, Analytical Laboratory Results and Emissions Calculations

ATS
Advanced Technology Systems, Inc.

US *Filter* Operating Services, Inc.

Fax

To: JOHN SHIMSHOCK **From:** Bernie Clark

Fax: (412) 967-1911 **Pages:** 3 Including cover sheet

Phone: **Date:** 10/24/2003

Re: B BATTERY INFO YOU REQUESTED **CC:**

☐ **Urgent** x **For Review** ☐ **Please Comment** ☐ **Please Reply** ☐ **Please Recycle**

• Comments:

John:

I'll try to get the official production records from accounting on Monday 10/27/03.

Bernie

If you have any questions please call Bernie Clark at (412) 233-1050.

03.000.0088
1/85

PUSHING AND CHARGING REPORT

"B" BATTERY

"A.M." DATE 10-09-03

PUSH		CHARGE		CLEAN CHUCK DOOR	COMMENTS	PUSH		CHARGE		CLEAN CHUCK DOOR	COMMENTS	TIME A.M.	P	C
A1		A34		A5		B1		B34		B6		12-1	0	0
A6		A1		A11		B6		B1		B11		1-2	4	4
A11		A6		A16		B11		B6		B16		2-3	4	4
A16		A11		A21		B16		B11		B21		3-4	4	4
A21		A16		A26		B21		B16		B26		4-5	4	4
A26		A21		A31		B26		B21		B31		5-6	5	5
A31		A26		A36		B31		B26		B36		6-7	4	4
A36		A31		B3		B36		B31				7-8	2	3
A3		A36		A8		B3		B36		B8		8-9	1	2
A8		A3		A13		B8		B3		B13		9-10	4	4
A13		A8		A18		B13		B8		B18		10-11	3	2
A18		A13		A23		B18		B13		B23		11-12	4	4
A23	1:11	A18	1:14	A28		B23	1:23	B18	1:25	B28				
A28	1:31	A23	1:30	A33		B28	7:02	B23	7:13	B33		~~TIME~~	~~P~~	~~C~~
A33	1:40	A28	1:44	A38		B33	7:20	B28	10:34			12-1		
A38	2:00	A33	2:00	B5								1-2		
A5	2:15	B33	857	A10		B5	2:30	A38	2:31	B10		2-3		
A10	2:40	A5	2:44	A15		B10	3:10	B5	3:01	B15		3-4		
A15	3:5	A10	3:12	A20		B15	3:29	B10	3:29	B20		4-5		
A20	3:47	A15	3:44	A25		B20	4:02	B15	4:00	B25		5-6		
A25	415	A20	413	A30		B25	430	B20	430	B30		6-7		
A30	445	A25	440	A35		B30	500	B25	500	B35		7-8		
A35	515	A30	515	B2		B35	530	B30	528			8-9		
A2	545	A35	540	A7		B2	556	B35	552	B7		9-10		
A7	609	A2	607	A12		B7	620	B2	621	B12		10-11		
A12	632	A7	632	A17		B12	645	B7	645	B17		11-12		
A17	700	A12	701	A22		B17	715	B12	716	B22		TOTALS		
A22	8:42	A17	735	A27		B22	702	B17	822	B27			P	C
A27	913	A22	910	A32		B27	925	B22	932	B32		12x8		
A32	948	A27	945	A37		B32		B27	938	B37		8x4		
A37	1022	A32	10:10	B4		B37	1037	B32				~~4x12~~		
A4	1056	A37	1052	B9		B4	11:15	B37	11:07	B9		Total	41	41
A9	1122	A4	1133	A14		B9	1137	B4	11:45	B14				
A14	1150	A9	1155	A19		B14		B9		B19				
A19		A14		A24		B19		B14		B24		FOREMAN		
A24		A19		A29		B24		B19		B29		12x8 Toth		
A29		A24		A34		B29		B24		B34		8x4 - Rickie		
A34		A29		B1		B34		B29				~~4x12~~		
22		22				19		19						

CLEAN A-1, A-2, A-3, A-4, A-5 CHUCK DOORS BEFORE REMOVING FOR PUSH

03.000.0088
1/85

PUSHING AND CHARGING REPORT

"B" BATTERY

P.M.

DATE 10/9/03

PUSH		CHARGE		CLEAN CHUCK DOOR	COMMENTS	PUSH		CHARGE		CLEAN CHUCK DOOR	COMMENTS	TIME A.M.	P	C
A1	205	A34	219	A6		B1	213	B34	207	B6		12-1		
A6	220	A1	246	A11		B6	250	B1	257	B11		1-2		
A11	301	A6	309	A16		B11	312	B6	315	B16		2-3		
A16	320	A11	325	A21		B16	332	B11	336	B21		3-4		
A21	342	A16	345	A26		B21	412	B16	413	B26		4-5		
A26	426	A21	425	A31		B26	438	B21	439	B31		5-6		
A31	456	A26	459	A36		B31	509	B26	515	B36		6-7		
A36	524	A31	526	B3		B36	535	B31	541			7-8		
A3	510	A36	609	A8		B3	604	B36	539	B8		8-9		
A8	619	A3	624	A13		B8	632	B3	634	B13		9-10		
A13	648	A8	647	A18		B13	655	B8	659	B18		10-11		
A18	705	A13	708	A23		B18	715	B13	719	B23		11-12		
A23	725	A18	728	A28		B23	738	B18	740	B28				
A28	752	A23	758	A33		B28	//	B23	809	B33		TIME P.M.	P	C
A33	814	A28	820	A36		B33	//	B28	//			12-1	5	5
A36	825	A33	834	B5								1-2	4	4
A5	839	B33	//	A10		B5	848	A36	852	B10		2-3	4	4
A10	904	A5	904	A15		B10	925	B5	926	B15		3-4	5	5
A15	937	A10	938	A20		B15	948	B10	948	B20		4-5	4	4
A20	1003	A15	1005	A25		B20	1017	B15	1017	B25		5-6	4	4
A25	1032	A20	1033	A30		B25	1046	B20	1047	B30		6-7	5	5
A30	1101	A25	1102	A35		B30	1115	B25	1114	B35		7-8	5	5
A35	1130	A30	1129	B2		B35		B30				8-9	4	4
A2		A35		A7		B2		B35		B7		9-10	4	4
A7		A2		A12		B7		B2		B12		10-11	4	4
A12		A7		A17		B12		B7		B17		11-12	3	3
A17		A12		A22		B17		B12		B22		TOTALS		
A22		A17		A27		B22		B17		B27			P	C
A27		A22		A32		B27		B22		B32		12x8		
A32		A27		A37		B32	101	B27		B37		8x4		
A37		A32		B4		B37		B32	132			4x12		
A4		A37		A9		B4		B37		B9		Total	52	52
A9		A4		A14		B9		B4		B14				
A14		A9		A19		B14	1203	B9	1207	B19				
A19	1217	A14	1215	A24		B19	1223	B14	1226	B24		FOREMAN		
A24	1239	A19	1235	A29		B24	1252	B19	1255	B29		12x8 -		
A29	124	A24	130	A34		B29	123	B24	1.65	B34		8x4 -		
A34	140	A29	147	B1		B34	150	B29	152			4x12-		
	27		26				25		26					

CLEAN A-1, A-2, A-3, A-4, A-5 CHUCK DOORS BEFORE REMOVING FOR PUSH

** TOTAL PAGE.02 **

Donald Smith
10/20/2003 08:36 AM

To: Bernie Clark/Clairton/USS@USS

cc:
Subject: B-Battery Production 10/9

B-Battery Production on Oct. 9th was 1,834.92 tons.

October 9, 2003 — 93 ovens pushed
⇒ 19.73 tons/push

PENNSTATE

1855

Continuing Education

Visible Emissions Evaluation Program

This certifies that

KELLY AJALA

has met the specifications of Federal EPA Reference Method 9 and qualified as a visible emissions evaluator. Maximum deviation on white and black smoke did not exceed 7.5% opacity and no single error exceeding 15% opacity was incurred during the certification test conducted by The Pennsylvania State University.

Certification valid

From: *September 16, 2003* To: *March 16, 2004*

Vice President and Dean for
Continuing and Distance Education

Visible Emissions Certification
Field Test Instructor

ED_002508A_00000522-00006

VISIBLE EMISSIONS OBSERVATIONS (VEO) DATA SHEET

GENERAL

Facility	U.S. Steel Clairton Works
Source ID	No. 3 Screening Station
Date	10-09-03
Test No.	#355-VEO-1
Observer	KELLY B. AJALA
Signature	Kelly B.

OBSERVATION

Start-End Times	0941 to 1041
Emissions Point	No. 3 Screening Station
Background	SILVER WALL
Color of Emissions	INVISIBLE → GREY
Reading Conditions	(Good) Fair, Poor)
Steam Present?	(No) Yes)
Plume Type	(None, Attached, Detached)

SOURCE

Direction from Source	NORTH-EAST
Distance to Source	300 FT.
Height of Source	60 FT.

WEATHER

Ambient Temp.	56 °F
Wind Speed	0-5 MPH
Wind Direction	NW-SE
Precipitation?	0 %

READINGS

Total No.	240
Highest Opacity	15 %

	:00	:15	:30	:45
00	0	0	0	0
01	0	0	0	0
02	0	5	10	10
03	10	0	0	0
04	0	0	0	10
05	10	10	0	0
06	0	0	0	0
07	0	0	0	0
08	0	0	0	0
09	0	0	10	10
10	0	0	0	0
11	0	0	0	0
12	0	5	15	15
13	15	15	0	0
14	0	0	0	0
15	0	0	0	0
16	0	0	0	0
17	0	0	0	0
18	0	0	0	0
19	0	0	0	0
20	0	0	0	0
21	0	0	0	0
22	0	0	0	0
23	0	0	0	0
24	0	0	0	0
25	0	0	0	0
26	0	0	0	0
27	0	0	0	0
28	0	0	0	0
29	0	0	0	0

	:00	:15	:30	:45
30	0	0	0	0
31	0	0	0	0
32	0	0	0	0
33	0	0	0	0
34	0	0	0	0
35	0	0	0	0
36	0	0	0	0
37	0	0	0	0
38	0	0	0	0
39	0	0	0	0
40	0	0	0	0
41	0	0	0	0
42	0	0	0	0
43	0	0	0	0
44	0	0	0	0
45	0	0	0	0
46	0	0	0	0
47	0	0	0	0
48	0	0	0	0
49	0	0	0	0
50	0	0	0	0
51	0	0	0	0
52	0	0	0	0
53	0	0	0	0
54	0	0	0	0
55	0	0	0	0
56	0	0	0	0
57	0	0	0	0
58	0	0	0	0
59	0	0	0	0

COMMENTS & SKETCH (show source, observer, north direction, structures, roads, etc.)

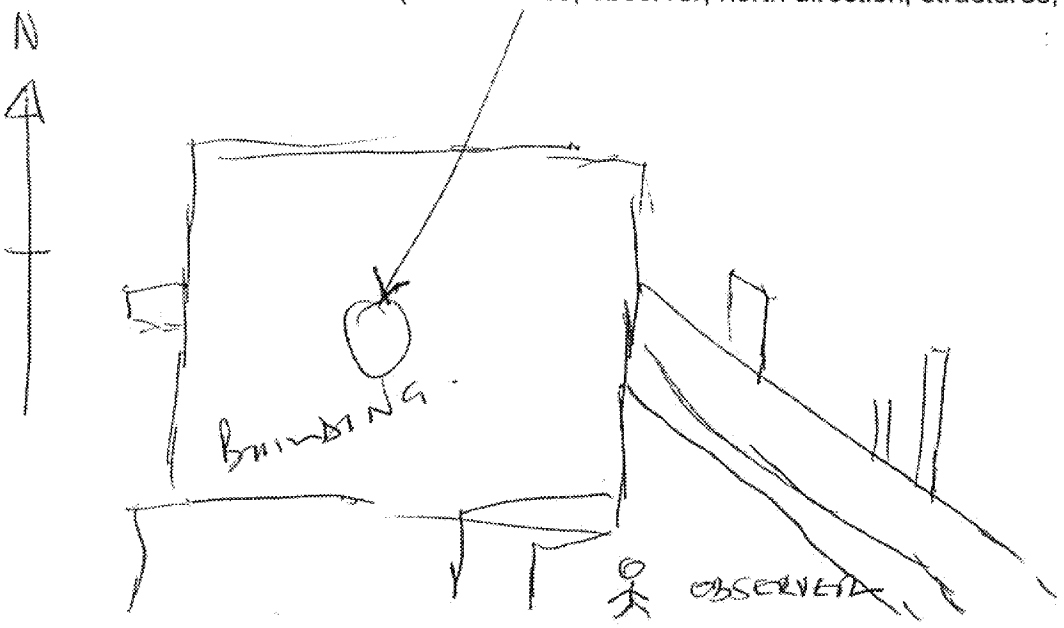

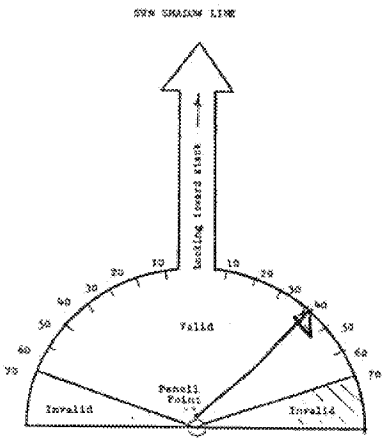

VISIBLE EMISSIONS OBSERVATIONS (VEO) DATA SHEET

GENERAL

Facility	U.S. Steel Clairton Works
Source ID	No. 3 Screening Station
Date	10-09-03
Test No.	#355-VEO-1
Observer	KELLY B. AJALA
Signature	Kelly B. Ajala

OBSERVATION

Start-End Times	1041 to 1057
Emissions Point	No. 3 Screening Station
Background	SILVER WALL
Color of Emissions	INVISIBLE → GREY
Reading Conditions	(Good, Fair, Poor)
Steam Present?	(No, Yes)
Plume Type	(None, Attached, Detached)

SOURCE

Direction from Source	NORTH - EAST
Distance to Source	300 FT
Height of Source	60 FT.

WEATHER

Ambient Temp.	57 °F
Wind Speed	0-5 MPH
Wind Direction	NW-SE
Precipitation?	0%

READINGS

Total No.	240
Highest Opacity	0%

	:00	:15	:30	:45
00	0	0	0	0
01	0	0	0	0
02	0	0	0	0
03	0	0	0	0
04	0	0	0	0
05	0	0	0	0
06	0	0	0	0
07	0	0	0	0
08	0	0	0	0
09	0	0	0	0
10	0	0	0	0
11	0	0	0	0
12	0	0	0	0
13	0	0	0	0
14	0	0	0	0
15	0	0	0	0
16	0	0	0	0
17				
18				
19				
20				
21				
22				
23				
24				
25				
26				
27				
28				
29				

	:00	:15	:30	:45
30				
31				
32				
33				
34				
35				
36				
37				
38				
39				
40				
41				
42				
43				
44				
45				
46				
47				
48				
49				
50				
51				
52				
53				
54				
55				
56				
57				
58				
59				

COMMENTS & SKETCH (show source, observer, north direction, structures, roads, etc.)

N

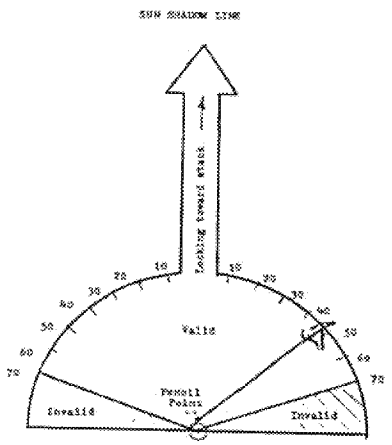

VISIBLE EMISSIONS OBSERVATIONS (VEO) DATA SHEET

GENERAL

Facility	U.S. Steel Clairton Works
Source ID	No. 3 Screening Station
Date	10-09-03
Test No.	#335-VEO-2
Observer	KELLY B. AJAZA
Signature	Kelly B. Ajaza

OBSERVATION

Start-End Times	1201 to 1301
Emissions Point	No. 3 Screening Station
Background	SILVER WALL
Color of Emissions	INVISIBLE - GREY
Reading Conditions	(Good, Fair, Poor)
Steam Present?	(No, Yes)
Plume Type	(None, Attached, Detached)

SOURCE

Direction from Source	EAST
Distance to Source	300 FT
Height of Source	60 FT

WEATHER

Ambient Temp.	59 °F
Wind Speed	0-5 MPH
Wind Direction	NW - SE
Precipitation?	0%

READINGS

Total No.	240
Highest Opacity	15 %

	:00	:15	:30	:45
00	0	0	0	0
01	0	0	0	0
02	0	0	0	0
03	0	0	0	0
04	0	0	0	0
05	0	0	0	0
06	0	0	0	0
07	0	0	0	0
08	0	0	0	0
09	0	0	0	0
10	0	0	0	0
11	0	0	0	0
12	0	0	0	0
13	0	0	0	0
14	0	0	0	0
15	0	0	0	0
16	0	0	0	0
17	0	0	0	0
18	0	0	0	0
19	0	0	0	0
20	0	0	0	0
21	0	0	0	0
22	0	0	0	0
23	0	0	0	0
24	0	0	0	0
25	0	0	0	0
26	0	0	0	0
27	0	0	0	0
28	0	0	0	0
29	0	0	0	0

	:00	:15	:30	:45
30	0	0	0	0
31	0	0	0	0
32	0	0	0	0
33	0	0	0	0
34	0	0	0	0
35	0	0	0	0
36	0	0	0	0
37	0	0	0	0
38	0	0	0	0
39	0	0	0	0
40	0	0	0	0
41	0	0	0	0
42	0	0	0	0
43	0	0	0	0
44	0	0	0	0
45	0	0	0	0
46	0	0	0	0
47	0	0	0	0
48	0	0	0	0
49	0	0	0	0
50	0	0	0	0
51	0	15	15	10
52	0	0	0	0
53	0	0	0	0
54	0	5	5	5
55	5	0	0	10
56	10	10	5	0
57	10	10	10	0
58	0	5	5	5
59	0	0	0	0

COMMENTS & SKETCH (show source, observer, north direction, structures, roads, etc.)

N

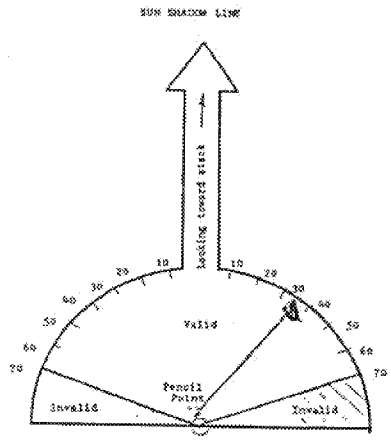

VISIBLE EMISSIONS OBSERVATIONS (VEO) DATA SHEET

GENERAL

Facility	U.S. Steel Clairton Works
Source ID	No. 3 Screening Station
Date	10-09-03
Test No.	#355-VEO-2
Observer	KELLY B. AJALA
Signature	Kelly Ajala

OBSERVATION

Start-End Times	1301 to 1305
Emissions Point	No. 3 Screening Station
Background	SILVER WALL
Color of Emissions	INVISIBLE - GREY
Reading Conditions	(Good, Fair, Poor)
Steam Present?	(No, Yes)
Plume Type	(None, Attached, Detached)

SOURCE

Direction from Source	EAST
Distance to Source	300 FT
Height of Source	60 FT

WEATHER

Ambient Temp.	59 °F
Wind Speed	0-5 MPH
Wind Direction	NW - SE
Precipitation?	0 %

READINGS

Total No.	240
Highest Opacity	0 %

	:00	:15	:30	:45
00	0	0	0	0
01	0	0	0	0
02	0	0	0	0
03	0	0	0	0
04	0	0	0	0
05				
06				
07				
08				
09				
10				
11				
12				
13				
14				
15				
16				
17				
18				
19				
20				
21				
22				
23				
24				
25				
26				
27				
28				
29				

	:00	:15	:30	:45
30				
31				
32				
33				
34				
35				
36				
37				
38				
39				
40				
41				
42				
43				
44				
45				
46				
47				
48				
49				
50				
51				
52				
53				
54				
55				
56				
57				
58				
59				

N COMMENTS & SKETCH (show source, observer, north direction, structures, roads, etc.)

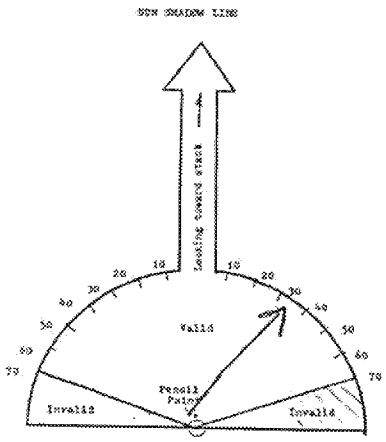

VISIBLE EMISSIONS OBSERVATIONS (VEO) DATA SHEET

GENERAL

Facility	U.S. Steel Clairton Works
Source ID	No. 3 Screening Station
Date	10-09-03
Test No.	#355-VEO-3
Observer	KELLY B. AJALA
Signature	Kelly B.

OBSERVATION

Start-End Times	1346 to 1446
Emissions Point	No. 3 Screening Station
Background	SILVER WALL
Color of Emissions	INVISIBLE - GREY
Reading Conditions	(Good, Fair, Poor)
Steam Present?	(No, Yes)
Plume Type	(None, Attached, Detached)

SOURCE

Direction from Source	EAST
Distance to Source	300 FT
Height of Source	60 FT

WEATHER

Ambient Temp.	64 °F
Wind Speed	0-5 MPH
Wind Direction	NW-SE
Precipitation?	0

READINGS

Total No.	240
Highest Opacity	10 %

	:00	:15	:30	:45
00	0	0	0	0
01	0	0	0	0
02	0	0	0	0
03	0	0	0	0
04	0	0	0	0
05	0	0	0	0
06	0	0	0	0
07	0	0	0	0
08	0	0	0	0
09	0	0	0	0
10	0	0	0	0
11	0	0	0	0
12	0	0	0	0
13	0	0	0	0
14	0	0	0	0
15	0	0	0	0
16	0	0	0	0
17	0	0	0	0
18	0	0	0	0
19	0	0	0	0
20	0	10	10	10
21	0	0	0	0
22	0	0	0	0
23	0	0	5	5
24	5	0	0	0
25	0	0	0	0
26	0	0	5	10
27	10	0	0	0
28	0	0	0	0
29	0	0	0	0

	:00	:15	:30	:45
30	0	0	0	0
31	0	0	0	0
32	0	0	0	0
33	0	10	10	10
34	0	0	0	0
35	0	0	0	0
36	0	0	0	0
37	0	0	0	0
38	0	0	10	10
39	0	0	0	0
40	0	0	0	0
41	0	0	0	0
42	0	0	0	0
43	0	0	0	0
44	0	0	0	0
45	0	0	0	0
46	0	0	0	0
47	0	0	0	0
48	0	5	5	0
49	0	5	5	5
50	0	0	0	0
51	0	0	0	0
52	0	0	0	0
53	0	0	0	0
54	0	0	0	0
55	0	0	0	0
56	0	10	10	0
57	0	0	0	0
58	0	0	0	0
59	0	0	0	0

COMMENTS & SKETCH (show source, observer, north direction, structures, roads, etc.)

N

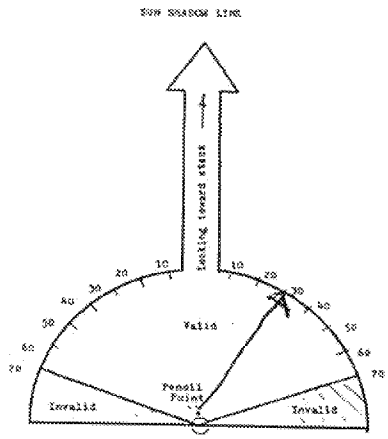

VISIBLE EMISSIONS OBSERVATIONS (VEO) DATA SHEET

GENERAL

Facility	U.S. Steel Clairton Works
Source ID	No. 3 Screening Station
Date	10-09-03
Test No.	#355-VEO-3
Observer	KELLY B. AJALA
Signature	Kelly B.

OBSERVATION

Start-End Times	1446 to 1450
Emissions Point	No. 3 Screening Station
Background	SILVER WALL
Color of Emissions	INVISIBLE → GREY
Reading Conditions	(Good, Fair, Poor)
Steam Present?	(No, Yes)
Plume Type	(None, Attached, Detached)

SOURCE

Direction from Source	EAST
Distance to Source	300 FT
Height of Source	60 FT

WEATHER

Ambient Temp.	
Wind Speed	0-5 MPH
Wind Direction	NW - SE
Precipitation?	0

READINGS

Total No.	240
Highest Opacity	5 %

	:00	:15	:30	:45
00	5	5	5	5
01	5	0	0	0
02	0	0	0	0
03	0	0	0	0
04	0	0	0	0
05				
06				
07				
08				
09				
10				
11				
12				
13				
14				
15				
16				
17				
18				
19				
20				
21				
22				
23				
24				
25				
26				
27				
28				
29				

	:00	:15	:30	:45
30				
31				
32				
33				
34				
35				
36				
37				
38				
39				
40				
41				
42				
43				
44				
45				
46				
47				
48				
49				
50				
51				
52				
53				
54				
55				
56				
57				
58				
59				

COMMENTS & SKETCH (show source, observer, north direction, structures, roads, etc.)

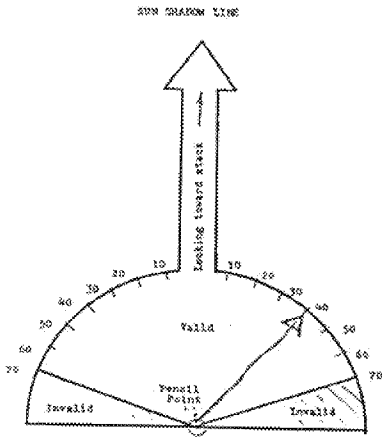

HIGH FLOW SOURCE SAMPLING DATA SHEET

CLIENT	U.S. Steel Clairton Works	TEST DATE	Oct ~~June~~ 09, 2003	CONTROL BOX NO.	APEX - 24	HOT/COLD BOX NO.	5
PLANT SITE	Clairton, PA	TEST NO.	CLR-#3SSB - M5 - 1	ORIFICE FACTOR (ΔH@)	1.943 ~~1.89~~	FILTER NO.	2686
TEST UNIT	No. 3 Screening Station Baghouse Exhaust	B.P. (in. Hg)	29.45	METER CORR. (Y)	0.9949 ~~0.9611~~	PROBE NO.	3 - 3
TEST CREW	JPS DAW KBQ Duct	STATIC P. (in. H2O)	+0.6	CALIBRATION DATE	07/31/03 ~~10/30/02~~	NOZZLE DIA. (in.)	0.219
PROJECT NO.	03 - 099 - P	STACK DIA. (in.)	16	PORT SIZE & TYPE	3" Nipples	PITOT COEF.	0.84

Test Port	Traverse Point (in.)	Time (EDT)	DGM Reading (dcf)	Pitot ΔP (in. H2O)	Orifice ΔH Required (in. H2O)	Orifice ΔH Actual (in. H2O)	Vacuum (in. Hg)	Probe Temp. (°F)	Stack Temp. (°F)	Meter Temp. In (°F)	Meter Temp. Out (°F)	Filter Temp. (°F)	Exit Temp. (°F)	Comments
Bot.	15.5	0941	910.481	2.1	5.13	5.13	7.0	255	058	063	063	255	049	2.5 min./pt.
	14.9		913.3	2.0	4.88	4.88	7.0	250	060	065	063	250	048	
	14.1		916.3	2.0	4.88	4.88	7.0	249	062	068	063	249	052	Baghouse Pressure Drop =
	13.2		919.2	1.9	4.64	4.64	6.5	248	061	073	063	249	061	9.2 in. H2O
	12.0		922.1	1.6	3.90	3.90	5.5	250	054	076	064	245	065	
	10.3		924.7	1.7	4.15	4.15	6.0	250	073	078	064	246	066	
	5.7		927.3	1.2	2.93	2.93	4.5	250	071	080	065	246	064	
	4.0		929.7	1.1	2.68	2.68	4.0	249	071	081	066	244	059	
	2.8		931.9	1.2	2.93	2.93	4.5	252	069	083	066	245	056	
	1.9		934.1	0.95	2.32	2.32	3.5	249	070	084	067	245	055	7 passes
	1.1		936.2	1.0	2.44	2.44	4.0	250	066	085	068	245	055	were
	0.5		938.2	0.87	2.12	2.12	3.5	249	067	086	068	246	054	processed
		1011	940.198											(pulled from
	Page 1	Δ = 30	Δ = 29.717	(ΔP) avg =	(ΔH) avg =				(Tstack) avg =		(Tmeter) avg =			Operator - Sandie)
	Totals	min	dcf	1.434		3.58			(°F) 67.7		(°F) 70.9			Estimates:
	Test	Δ = 60	Δ = 61.851	(ΔP) avg =	(ΔH) avg =				(Tstack) avg =		(Tmeter) avg =			MW = 28.5
	Totals	min	dcf	1.537		3.88			(°F) 69.2		(°F) 75.0			%H2O = 3

Dry Gas Composition

	Run 1	Run 2
CO2	0%	Air
O2	20.9%	
CO	0%	
N2	79.1%	

(ΔP) avg = $\{[\Sigma(\Delta P_i)^{0.5}]/n\}^2$

2.44

I = 95%

2.1 = 5.13

System Leak Check (60 sec)

	Vacuum (in. Hg)	DGM Rate (cfm)	Required (cfm)
Before	8.0	0.001	< 0.02
After	11.0	0.002	< 0.02

Pitot Leak Check (15 sec)

	Positive	Negative
Before	OK	OK
After	OK	OK

H_2O = 2.9

osctm = 5649

2.95

I = 95%

No.	Impinger Contents	Final	Initial	Δ (g)
1.	100 mL Distilled Deionized Water	536.4	531.3	5.1
2.	100 mL Distilled Deionized Water	563.3	552.4	10.9
3.	Empty	457.4	453.9	3.5
4.	~200 g Silica Gel	676.0	657.3	18.7
5.				
6.				38.2 g
7.				
8.				

ED_002508A_00000522-00013

HIGH FLOW SOURCE SAMPLING DATA SHEET

CLIENT	U.S. Steel Clairton Works	TEST DATE	~~June~~ Oct 09, 2003	CONTROL BOX NO.	APEX ~~24~~ JPY
PLANT SITE	Clairton, PA	TEST NO.	CLR-#3SSB - M5 - 1	ORIFICE FACTOR (ΔH@)	1.943 ~~1.89~~
TEST UNIT	No. 3 Screening Station Baghouse Exhaust	B.P. (in. Hg)	29.45	METER CORR. (Y)	0.9949 ~~0.9611~~
TEST CREW	JPS KBA DAW	STATIC P. (in. H2O)	0.6	CALIBRATION DATE	07/24/03 ~~10/20/02~~
PROJECT NO.	03 - 099 - P	STACK DIA. (in.)	16	PORT SIZE & TYPE	3" Nipples

HOT/COLD BOX NO. 5
FILTER NO. 2686
PROBE NO. 3 - 3
NOZZLE DIA. (in.) 0.219
PITOT COEF. 0.84

Duct

Test Port	Traverse Point (in.)	Time (EDT)	DGM Reading (dcf)	Pitot ΔP (in. H2O)	Orifice ΔH Required (in. H2O)	Orifice ΔH Actual (in. H2O)	Vacuum (in. Hg)	Probe Temp. (°F)	Stack Temp. (°F)	Meter Temp. In (°F)	Meter Temp. Out (°F)	Filter Temp. (°F)	Exit Temp. (°F)	Comments
Side	15.5	1013	940.198	1.9	4.64	4.64	6.5	251	066	083	069	249	055	2.5 min./pt.
	14.9		943.2	1.9	4.64	4.64	6.5	250	068	086	070	241	055	Breaker Tripped
	14.1	5	945.7	1.9	4.86	4.86	7.0	255	063	085	071	242	056	Baghouse Pressure Drop =
	13.2	1027	948.4	1.9	4.86	4.86	6.5	251	070	079	072	232	052	9.2 in. H2O
	12.0	10	951.2	1.6	4.10	4.10	6.0	250	087	083	072	239	054	
	10.3		954.0	1.7	4.35	4.35	6.0	233	071	080	073	237	053	1033 Breaker Tripp
	5.7	1039 15	956.2	1.6	4.10	4.10	6.0	252	075	082	073	236	053	
	4.0		959.4	1.4	3.58	3.58	5.0	250	083	085	073	230	055	
	2.8	20	961.9	1.4	3.58	3.58	5.0	251	073	088	074	231	055	
	1.9		964.4	1.5	3.84	3.84	5.5	250	068	090	074	238	055	
	1.1	25	967.0	1.5	3.84	3.84	5.5	252	066	091	074	240	056	
	0.5		969.7	1.5	3.84	3.84	5.5	250	064	092	075	241	056	
		1058	972.332											
														Estimates:
	Page 2	Δ = 30	Δ = 32.134	(ΔP) avg =	(ΔH) avg =	4.196			(Tstack) avg = 70.8		(Tmeter) avg = 79.0			MW = 28.5
	Totals	min	dcf	1.644					(°F)		(°F)			%H2O = 3

Dry Gas Composition

	Run 1	Run 2
CO2		
O2		
CO		
N2		

(ΔP) avg = $\{ [\Sigma(\Delta P_i)^{0.5}] / n \}^2$

2.56

System Leak Check (60 sec)

	Vacuum (in. Hg)	DGM Rate (cfm)	Required (cfm)
Before			< 0.02
After			< 0.02

Pitot Leak Check (15 sec)

	Positive	Negative
Before		
After		

No.	Impinger Contents	Final	Initial	Δ (g)
1.	100 mL Distilled Deionized Water			
2.	100 mL Distilled Deionized Water			
3.	Empty			
4.	~200 g Silica Gel			
5.				
6.				
7.				
8.				

ED_002508A_00000522-00014

HIGH FLOW SOURCE SAMPLING DATA SHEET

CLIENT	U.S. Steel Clairton Works	TEST DATE	~~June~~ Oct 09, 2003	CONTROL BOX NO.	APEX - 24
PLANT SITE	Clairton, PA	TEST NO.	CLR-#3SSB - M5 - 2	ORIFICE FACTOR (ΔH@)	1.943
TEST UNIT	No. 3 Screening Station Baghouse Exhaust	B.P. (in. Hg)	29.45	METER CORR. (Y)	0.9949
TEST CREW	KBA DMW JPS Duct	STATIC P. (in. H2O)	0.6	CALIBRATION DATE	07/31/03
PROJECT NO.	03 - 099 - P	STACK DIA. (in.)	16	PORT SIZE & TYPE	3" Nipples

HOT/COLD BOX NO. 4
~~1.00~~ FILTER NO. 2700
~~0.0611~~ PROBE NO. 3-3
~~10/30/02~~ NOZZLE DIA. (in.) 0.219
PITOT COEF. 0.84

Test Port	Traverse Point (in.)	Time (EDT)	DGM Reading (dcf)	Pitot ΔP (in. H2O)	Orifice ΔH Required (in. H2O)	Orifice ΔH Actual (in. H2O)	Vacuum (in. Hg)	Probe Temp. (°F)	Stack Temp. (°F)	Meter Temp. In (°F)	Meter Temp. Out (°F)	Filter Temp. (°F)	Exit Temp. (°F)	Comments
Bot.	15.5	1201 Start	972.813	2.0	5.14	5.14	8.5	250	077	081	080	254	055	2.5 min./pt.
	14.9		975.7	1.9	4.88	4.88	8	248	082	085	081	248	050	
	14.1	5	978.6	1.9	4.88	4.88	8	247	079	085	081	247	058	Baghouse Pressure Drop =
	13.2		981.3	2.0	5.14	5.14	8.5	248	075	092	082	247	065	9.2 in. H2O
	12.0	10	984.5	1.9	4.88	4.88	8.0	241	074	095	082	247	067	
	10.3		987.6	1.9	4.88	4.88	8	246	074	097	083	248	063	
	5.7	15	990.6	1.2	3.08	3.08	5.5	247	077	099	084	247	061	
	4.0		993.1	1.2	3.08	3.08	5.5	247	077	100	085	247	060	7.5 probes
	2.8	20	995.4	1.0	2.57	2.57	4.5	245	093	101	086	247	059	processed
	1.9		997.7	0.98	2.52	2.52	4.5	246	084	102	086	248	057	during test
	1.1	25	999.9	0.98	2.52	2.52	4.5	245	081	102	087	248	057	(verbal from
	0.5		2.1	0.98	2.52	2.52	4.5	246	082	102	087	248	056	Operator-Jendrick)
		1231 Stop	1004.295											
	Page 1	Δ = 30	Δ = 31.482	(ΔP) avg =	(ΔH) avg =	3.84			(Tstack) avg = 79.6		(Tmeter) avg = 89.5			
	Totals	min	dcf	1461					(°F)		(°F)			Estimates:
	Test	Δ = 60	Δ = 64.770	(ΔP) avg =	(ΔH) avg =	3.98			(Tstack) avg =		(Tmeter) avg =			MW = 28.5
	Totals	min	dcf	1527					(°F)	80.8	(°F)	92.5		%H2O = 3

Dry Gas Composition

	Run 1	Run 2
CO2	4%	Air
O2	20.9%	
CO	4%	
N2	79.1%	

(ΔP) avg = $\{[\Sigma(\Delta P_i)^{0.5}]/n\}^2$ 2.57

System Leak Check (60 sec)

	Vacuum (in. Hg)	DGM Rate (cfm)	Required (cfm)
Before	9.0	0.010	< 0.02
After	10.0	0.008	< 0.02

Pitot Leak Check (15 sec)

	Positive	Negative
Before	OK	OK
After	OK	OK

$H_2O = 3.1$
dscfm = 5562
I = 98%

No.	Impinger Contents	Final	Initial	Δ (g)
1.	100 mL Distilled Deionized Water	543.4	533.3	9.9
2.	100 mL Distilled Deionized Water	580.9	570.7	10.2
3.	Empty	447.4	443.5	3.9
4.	~200 g Silica Gel	652.9	635.7	17.2
5.				
6.				41.2 g
7.				
8.	ACID: Phil Lawrence			

ED_002508A_00000522-00015

HIGH FLOW SOURCE SAMPLING DATA SHEET

CLIENT	U.S. Steel Clairton Works	TEST DATE	October 9, 2003	CONTROL BOX NO.	APEX - 14 JD	HOT/COLD BOX NO.	4
PLANT SITE	Clairton, PA	TEST NO.	CLR-#3SSB - M5 - 2	ORIFICE FACTOR (ΔH@)	1.943 ~~1.89~~	FILTER NO.	2700
TEST UNIT	No. 3 Screening Station Baghouse Exhaust	B.P. (in. Hg)	29.45	METER CORR. (Y)	0.9949 ~~0.9611~~	PROBE NO.	3-3
TEST CREW	KBA DAN JPS Duct	STATIC P. (in. H2O)	0.6	CALIBRATION DATE	07/24/03 ~~10/30/02~~	NOZZLE DIA. (in.)	0.219
PROJECT NO.	03 - 099 - P	STACK DIA. (in.)	16	PORT SIZE & TYPE	3" Nipples	PITOT COEF.	0.84

Test Port	Traverse Point (in.)	Time (EDT)	DGM Reading (dcf)	Pitot ΔP (in. H2O)	Orifice ΔH Required (in. H2O)	Orifice ΔH Actual (in. H2O)	Vacuum (in. Hg)	Probe Temp. (°F)	Stack Temp. (°F)	Meter Temp. In (°F)	Meter Temp. Out (°F)	Filter Temp. (°F)	Exit Temp. (°F)	Comments
Side	15.5	1233	4.295	1.9	4.88	4.88	8	246	079	099	088	250	057	2.5 min./pt.
	14.9		7.2	1.8	4.63	4.63	7.5	245	082	101	088	230	055	
	14.1	5	10.1	1.8	4.63	4.63	7.5	244	082	102	089	235	055	Baghouse Pressure Drop =
	13.2		13.1	1.8	4.63	4.63	7.5	245	081	103	089	241	055	9.2 in. H2O
	12.0	10	16.0	1.7	4.37	4.37	7.0	245	083	104	089	243	055	
	10.3		19.0	1.6	4.11	4.11	7.0	244	082	105	090	243	055	
	5.7	15	22.0	1.6	4.11	4.11	7.0	245	078	105	090	244	053	
	4.0		24.4	1.6	4.11	4.11	7.0	243	078	103	090	244	055	
	2.8	20	27.2	1.4	3.60	3.60	6.0	244	081	101	090	244	055	
	1.9		29.8	1.4	3.60	3.60	6.0	246	087	099	090	243	056	
	1.1	25	32.4	1.3	3.34	3.34	5.5	244	085	098	090	244	056	
	0.5		34.9	1.3	3.34	3.34	5.5	246	086	097	089	245	056	
		1303	37.583											
														Estimates:
	Page 2	Δ = 30	Δ = 33.288	(ΔP) avg =	(ΔH) avg =	4.11			(Tstack) avg = 82		(Tmeter) avg = 95.4			MW = 28.5
	Totals	min	dcf	1.594					(°F)		(°F)			%H2O = 3

Dry Gas Composition

	Run 1	Run 2
CO2		
O2		
CO		
N2		

(ΔP) avg = $\{[\Sigma(\Delta P_i)^{0.5}]/n\}^2$ 2.57

System Leak Check (60 sec)

	Vacuum (in. Hg)	DGM Rate (cfm)	Required (cfm)
Before			< 0.02
After			< 0.02

Pitot Leak Check (15 sec)

	Positive	Negative
Before		
After		

No.	Impinger Contents	Final	Initial	Δ (g)
1.	100 mL Distilled Deionized Water			
2.	100 mL Distilled Deionized Water			
3.	Empty			
4.	~200 g Silica Gel			
5.				
6.				
7.				
8.				

ED_002508A_00000522-00016

HIGH FLOW SOURCE SAMPLING DATA SHEET

CLIENT	U.S. Steel Clairton Works	TEST DATE	~~June~~ Oct 09 , 2003	CONTROL BOX NO.	APEX-~~2~~ 34	HOT/COLD BOX NO.	2
PLANT SITE	Clairton, PA	TEST NO.	CLR-#3SSB - M5 - 3	ORIFICE FACTOR (ΔH@)	1.943	~~1.89~~ FILTER NO.	2701
TEST UNIT	No. 3 Screening Station Baghouse Exhaust	B.P. (in. Hg)	29.45	METER CORR. (Y)	~~0.9949~~	~~0.9641~~ PROBE NO.	3-3
TEST CREW	KBA JPS DAN Duct	STATIC P. (in. H2O)	+0.6	CALIBRATION DATE	~~07/24/03~~	~~10/30/02~~ NOZZLE DIA. (in.)	0.219
PROJECT NO.	03 - 099 - P	STACK DIA. (in.)	16	PORT SIZE & TYPE	3" Nipples	PITOT COEF.	0.84

Test Port	Traverse Point (in.)	Time (EDT)	DGM Reading (dcf)	Pitot ΔP (in. H2O)	Orifice ΔH Required (in. H2O)	Orifice ΔH Actual (in. H2O)	Vacuum (in. Hg)	Probe Temp. (°F)	Stack Temp. (°F)	Meter Temp. In (°F)	Meter Temp. Out (°F)	Filter Temp. (°F)	Exit Temp. (°F)	Comments
Bot.	15.5	1346	038.002	1.9	4.94	4.94	10.5	246	081	085	085	244	060	2.5 min./pt.
	14.9		40.9	1.9	4.94	4.94	10.5	245	079	086	084	243	053	
	14.1	5	43.8	1.9	4.94	4.94	10.5	245	089	088	084	242	060	Baghouse Pressure Drop =
	13.2		46.8	1.8	4.68	4.68	10	246	088	091	085	240	061	9.2 in. H2O
	12.0	10	49.7	1.8	4.68	4.68	10	244	082	094	085	240	061	
	10.3		52.7	1.7	4.42	4.42	9.5	243	079	095	085	241	060	
	5.7	15	55.5	1.1	2.86	2.86	7.0	247	083	096	086	241	060	
	4.0		57.9	1.2	3.12	3.12	7.5	246	083	097	086	243	059	8 Changes
	2.8	20	60.3	1.0	2.60	2.60	6.5	246	081	096	087	243	059	Processed
	1.9		62.5	0.9	2.34	2.34	6	245	092	096	087	244	058	
	1.1	25	64.7	0.95	2.47	2.47	6	247	088	095	087	244	055	(sub-total from
	0.5		66.8	0.95	2.47	2.47	6	246	090	095	087	244	055	Operator - Sandra)
	Σ	1416 stop	068.962											
	Page 1	Δ = 30	Δ = 30.960	(ΔP) avg =	(ΔH) avg =	3.705			(Tstack) avg = (°F)	84.6	(Tmeter) avg = (°F)	89.3		
	Totals	min	dcf	1.393										Estimates:
	Test	Δ = 60	Δ = 62.800	(ΔP) avg =	(ΔH) avg =	3.748			(Tstack) avg = (°F)	89.5	(Tmeter) avg = (°F)	90.3		MW = 28.5
	Totals	min	dcf	1.432										%H2O = 3

Dry Gas Composition

	Run 1	Run 2
CO2	0%	AL
O2	24.9%	
CO	0%	
N2	79.1%	

(ΔP) avg = $\{ [\Sigma(\Delta P_i)^{0.5}] / n \}^2$ 2.60

System Leak Check (60 sec)

	Vacuum (in. Hg)	DGM Rate (cfm)	Required (cfm)
Before	10.0	0.005	<0.02
After	10.5	0.002	<0.02

Pitot Leak Check (15 sec)

	Positive	Negative
Before	OK	OK
After	OK	OK

1/.150 = 100
1/H_2O = 3.5

No.	Impinger Contents	Final	Initial	Δ (g)
1.	100 mL Distilled Deionized Water	463.0	547.4	-84.4
2.	100 mL Distilled Deionized Water	675.8	567.7	108.1
3.	Empty	442.4	436.8	5.6
4.	~200 g Silica Gel	694.9	678.1	16.8
5.				
6.			TOTAL	46.1 g
7.				
8.				

ED_002508A_00000522-00017

HIGH FLOW SOURCE SAMPLING DATA SHEET

CLIENT	U.S. Steel Clairton Works	TEST DATE	Oct 09 ~~June~~ , 2003	CONTROL BOX NO.	APEX - 24	HOT/COLD BOX NO.	2
PLANT SITE	Clairton, PA	TEST NO.	CLR-#3SSB - M5 - 3	ORIFICE FACTOR (ΔH@)	1.943	~~1.89~~ FILTER NO.	2701
TEST UNIT	No. 3 Screening Station Baghouse Exhaust	B.P. (in. Hg)	29.45	METER CORR. (Y)	0.9949	~~0.9641~~ PROBE NO.	3-3
TEST CREW	JPS KBA DON Duct	STATIC P. (in. H2O)	+0.6	CALIBRATION DATE	07/31/03	~~10/30/02~~ NOZZLE DIA. (in.)	0.219
PROJECT NO.	03 - 099 - P	STACK DIA. (in.)	16	PORT SIZE & TYPE	3" Nipples	PITOT COEF.	0.84

Test Port	Traverse Point (in.)	Time (EDT)	DGM Reading (dcf)	Pitot ΔP (in. H2O)	Orifice ΔH Required (in. H2O)	Orifice ΔH Actual (in. H2O)	Vacuum (in. Hg)	Probe Temp. (°F)	Stack Temp. (°F)	Meter Temp. In (°F)	Meter Temp. Out (°F)	Filter Temp. (°F)	Exit Temp. (°F)	Comments
Side	15.5	1417	068.962	1.3	3.38	3.38	8.0	247	094	093	087	248	054	2.5 min./pt.
	14.9		71.4	1.7	4.42	4.42	10.0	246	098	094	087	245	052	
	14.1	5	74.2	1.7	4.42	4.42	10.5	246	098	094	087	254	052	Baghouse Pressure Drop =
	13.2		77.2	1.6	4.10	4.10	10	245	103	094	087	248	053	9.2 in. H2O
	12.0	10	79.8	1.6	4.10	4.10	9.5	243	097	095	087	248	053	
	10.3		82.6	1.6	4.10	4.10	9.5	245	099	095	087	248	054	
	5.7	15	85.3	1.4	3.58	3.58	9.0	244	093	095	087	247	054	
	4.0		88.0	1.4	3.58	3.58	8.5	246	088	095	087	248	055	
	2.8	20	90.6	1.4	3.58	3.58	8.5	245	087	096	087	247	055	
	1.9		93.2	1.3	3.33	3.33	8.5	244	094	097	088	248	056	
	1.1	25	95.7	1.3	3.33	3.33	8.5	246	095	097	088	248	056	
	0.5		98.2	1.4	3.58	3.58	8.5	246	087	098	088	248	056	
	30	1447 end	100.802											
														Estimates:
	Page 2	Δ = 30	Δ = 31.840	(ΔP) avg =	(ΔH) avg =	3.792			(Tstack) avg =		(Tmeter) avg = 91.3			MW = 28.5
	Totals	min	dcf	1.471					94.4 (°F)		(°F)			%H2O = 3

Dry Gas Composition

	Run 1	Run 2
CO2		
O2		
CO		
N2		

(ΔP) avg = $\{ [\Sigma(\Delta P_i)^{0.5}] / n \}^2$

2.56

System Leak Check (60 sec)

	Vacuum (in. Hg)	DGM Rate (cfm)	Required (cfm)
Before			< 0.02
After			< 0.02

Pitot Leak Check (15 sec)

	Positive	Negative
Before		
After		

No.	Impinger Contents	Final	Initial	Δ (g)
1.	100 mL Distilled Deionized Water			
2.	100 mL Distilled Deionized Water			
3.	Empty			
4.	~200 g Silica Gel			
5.				
6.				
7.				
8.				

ED_002508A_00000522-00018

APEX GLASS NOZZLE CALIBRATION DATA SHEET Printed: 05/21/03

Nozzle No.	Size (inches)					Calibrated		Quantity by Size
	Avg.		A	B	C	By	Date	
1	0.125		0.125	0.125	0.125	KA	03-12-96	1
2	0.156		0.156	0.156	0.156	KA	03-12-96	3
3	0.156		0.156	0.156	0.156	KA	09-04-96	
44	0.156		0.156	0.156	0.156	KA	09/18/00	
11	0.180		0.180	0.180	0.180	KA	07-20-98	2
19	0.180		0.180	0.180	0.180	KA	06/07/02	
5	0.190		0.190	0.190	0.190	KA	12/09/02	5
27	0.190		0.190	0.190	0.190	KA	12/09/02	
29	0.190		0.190	0.190	0.190	KA	12/09/02	
31	0.190		0.190	0.190	0.190	KA	12/09/02	
56	0.190		0.190	0.190	0.190	KA	12/09/02	
15	0.219		0.219	0.219	0.219	KA	12/09/02	2
42	0.219		0.219	0.219	0.219	KA	12/09/02	
40	0.220		0.220	0.220	0.220	KA	12/09/02	1
8	0.240		0.240	0.240	0.240	KA	03/09/03	1
50	0.260		0.260	0.260	0.260	KA	12/09/02	2
52	0.260		0.260	0.260	0.260	KA	12/09/02	
7	0.275		0.275	0.275	0.275	KA	03/09/03	1
12	0.281		0.281	0.281	0.281	KA	03/18/02	1
16	0.290		0.290	0.290	0.290	KA	06/24/01	2
18	0.290		0.290	0.290	0.290	KA	03/18/02	
9	0.305		0.305	0.305	0.305	KA	03/09/03	1
32	0.310		0.310	0.310	0.310	KA	10/20/02	1
35	0.320		0.320	0.320	0.320	KA	10/09/01	1
21	0.344		0.344	0.344	0.344	KA	06/24/01	1
23	0.347		0.347	0.347	0.347	KA	03-10-98	1
24	0.375		0.375	0.375	0.375	KA	10/20/02	2
25	0.375		0.375	0.375	0.375	KA	06/24/01	
13	0.440		0.440	0.440	0.440	KA	03/09/03	1
14	0.469		0.469	0.469	0.469	KA	03/09/03	1
4	0.500		0.500	0.500	0.500	KA	02/24/03	2
6	0.500		0.500	0.500	0.500	KA	02/24/03	
17	0.520		0.520	0.520	0.520	KA	03/19/03	1
60	0.560		0.560	0.560	0.560	KA	10/20/02	1
43	0.750		0.750	0.750	0.750	KA	01/05/00	1
49	1.060		1.060	1.060	1.060	KA	01/18/01	4
61	1.060		1.060	1.060	1.060	KA	10/20/02	
62	1.060		1.060	1.060	1.060	KA	10/20/02	
63	1.060		1.060	1.060	1.060	KA	10/20/02	

GEOMETRIC PITOT TUBE CALIBRATION & TYPE K THEROMCOUPLE CHECK

Probe No.	3-3	Ambient Temp. (°F)	64	
Caliper No.	XFS-59	Thermocouple Temps.		Tolerance:
Calibrated By:	KELLY B. AJALA	Stack (°F)	63	Δ <= 2°F
Date:	04-10-03	Probe (°F)	63	from Amb.

D_t = 0.375"

φ.1875" ≤ D_t ≤ φ.375"

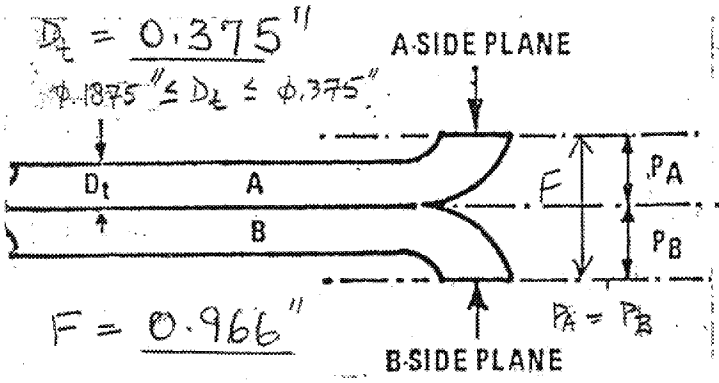

F = 0.966"

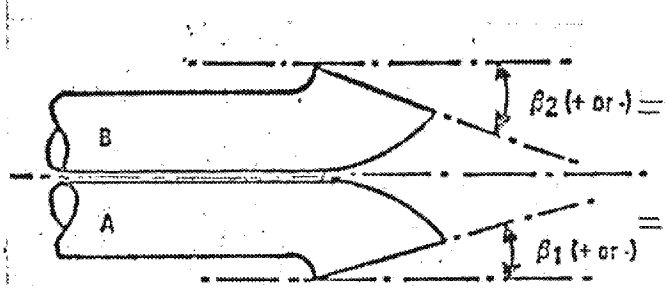

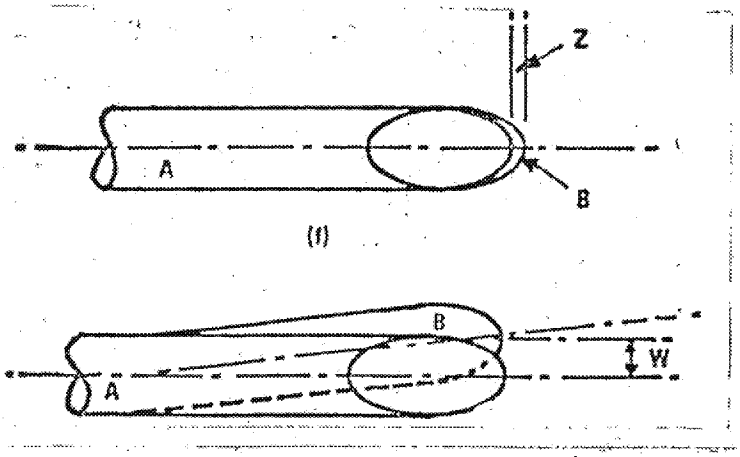

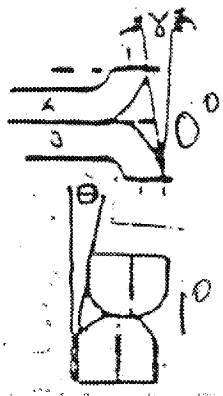

Z = F * Tan(γ) ≤ 1/8" (φ.125φ")

Z = 0.000"

W = F * Tan(θ) = ≤ 1/32" (φ.φ3125")

W = 0.0168"

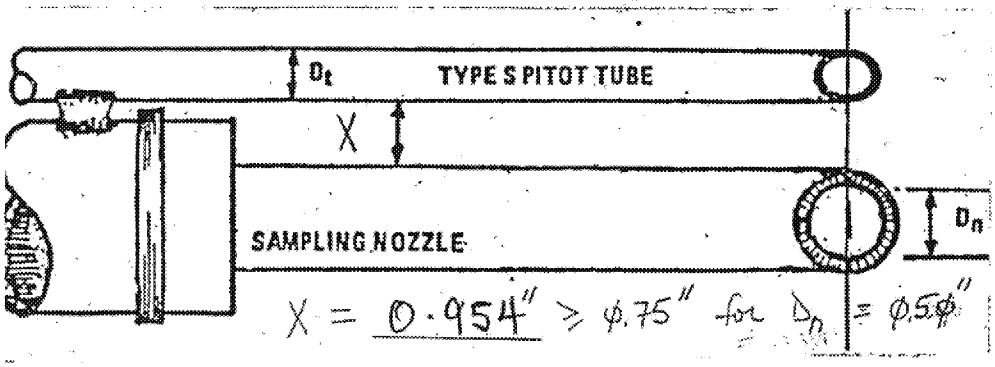

X = 0.954" ≥ φ.75" for D_n = φ.5φ"

[γ and θ measured in degrees]

[Both ≤ 1φ°]

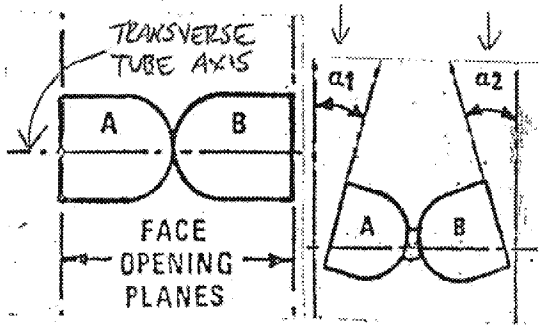

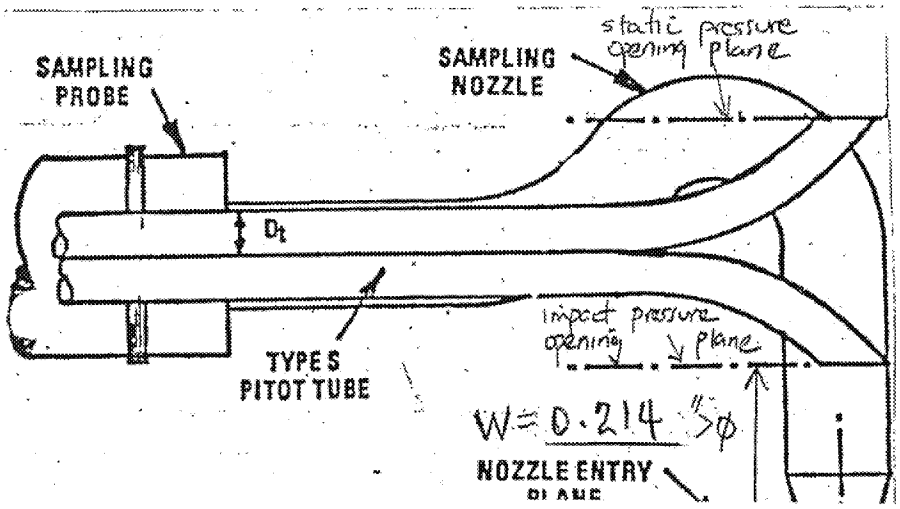

W = 0.214" ≥ φ

Z = 2.620" ≥ 2"

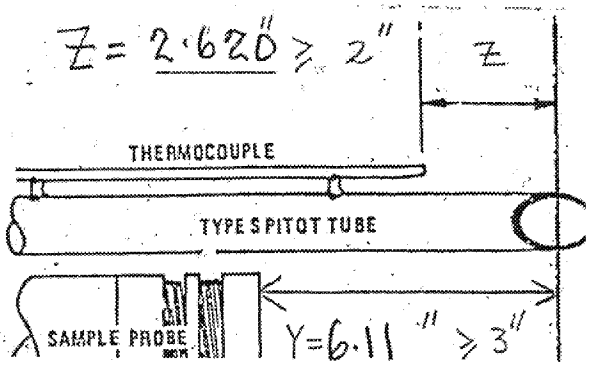

Y = 6.11" ≥ 3"

GEOMETRIC PITOT TUBE CALIBRATION & TYPE K THEROMCOUPLE CHECK

Probe No.	3-3	Ambient Temp. (°F)	66 °F	
Caliper No.	XFS-59	Thermocouple Temps.		Tolerance:
Calibrated By:	KELLY B. AJALA	Stack (°F)	65 °F	Δ <= 2°F
Date:	10-20-03	Probe (°F)	64 °F	from Amb.

D_t = 0.375"

Ø.1875" ≤ D_t ≤ Ø.375"

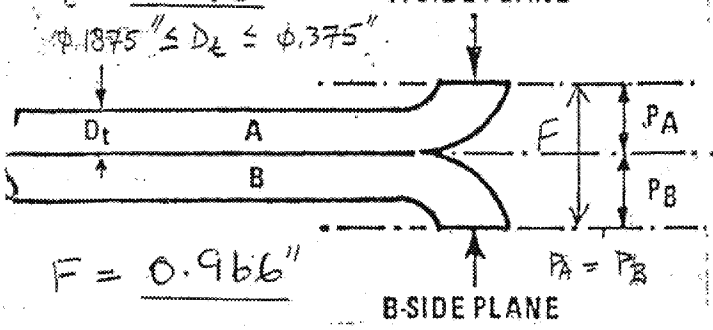

F = 0.966"

$P_A = P_B$

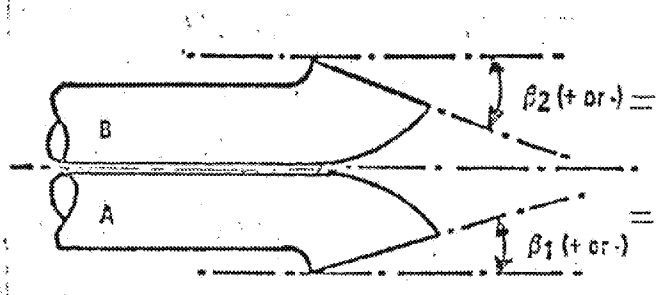

β_2 (+ or -) = 2 ≤ 5

β_1 (+ or -) = 4 ≤ 5

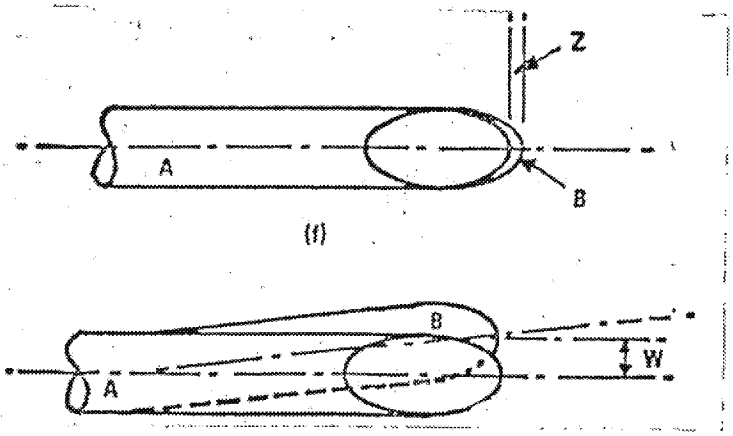

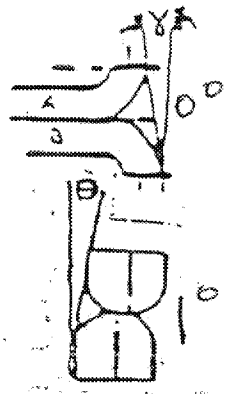

Z = F * Tan(γ)

≤ 1/8" (Ø.125Ø")

Z = 0.000"

W = F * Tan(θ) =

≤ 1/32" (Ø.Ø3125")

W = 0.0168"

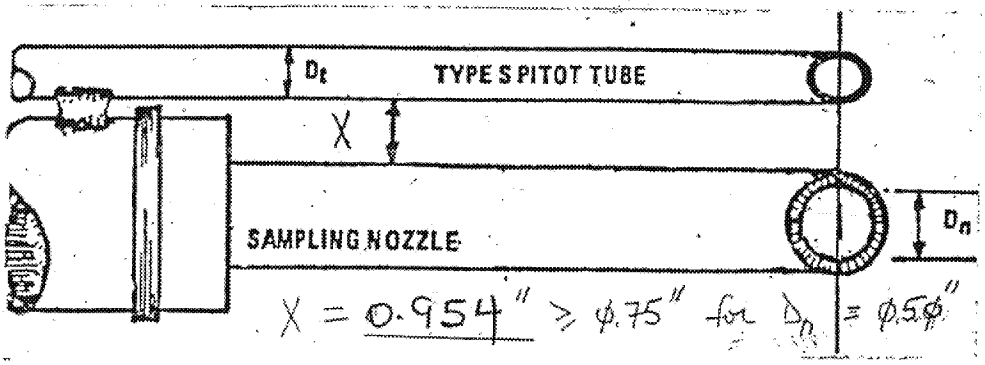

X = 0.954" ≥ Ø.75" for D_n = Ø.5Ø"

[γ and θ measured in degrees]

[Both ≤ 1Ø°]

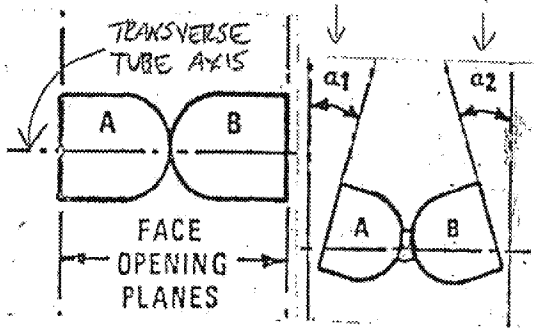

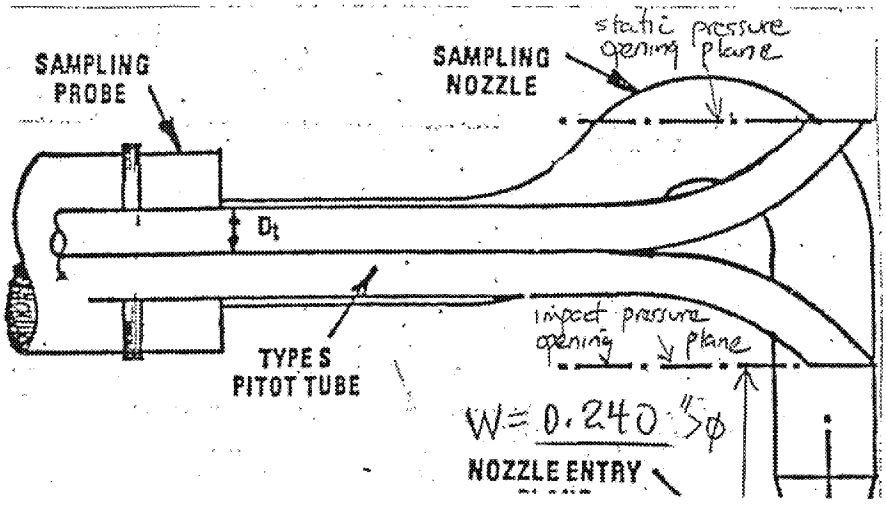

W = 0.240" > Ø

Z = 2.625" ≥ 2"

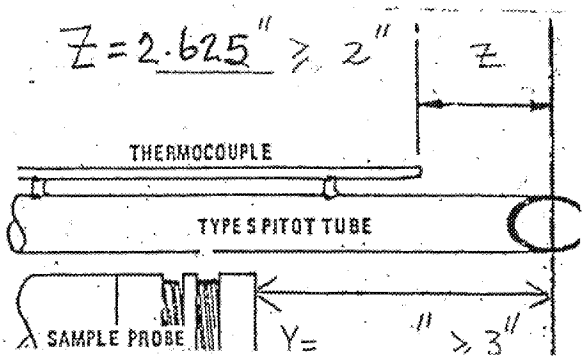

Y= " ≥ 3"

CERTIFICATE OF CALIBRATION

This certifies that your AL-20 AMERICAN WET TEST gas meter,
serial no. P-1146
has been calibrated with a bell prover.
AMERICAN 10 foot, # 3157
It is treaceable to the N.I.S.T., reference no. 1249811.

Calibration by Carl Poe Co., Inc.
99 Reinerman Houston, TX 77007
713-861-3816

2-8-96
Date

Mark Poe
Signature

ED_002508A_00000522-00022

DRY GAS METER CALIBRATION DATA SHEET

METER BOX NO. APEX - 4
CALIBRATION DATE July 30, 2003
BAROMETRIC PRESSURE (in. Hg) 29.19

CHECK ONE: PRE-TEST X
POST-TEST
CALIBRATED BY JPS

Vacuum Side

	Orifice Diff. Pres. ΔH (in. H_2O)	Vacuum (in. Hg)	Dry Gas Meter Leak Rate (cfm)	
Dry Gas Meter Leak Check	0.0	20.0	<0.001	< 0.01

Pressure Side

Orifice Diff. Pressure Steady ?		Orifice Diff. Pres. ΔH (in. H_2O)
Y: ✓	N:	7.4

Thermocouple Check: Ti (°F) 83 To (°F) 82 Ambient Temp (°F) 81

Tolerance: Δ <= 2°F from Ambient Temp.

RUN NO.		WET TEST METER Gas Volume Vw (cf)	Elapsed Time (min.)	Meter Temp. Tw (°F)	DRY GAS METER Gas Volume Vd (dcf)	Inlet Temp. Ti (°F)	Outlet Temp. To (°F)	Orifice Diff. Pres. ΔH (in. H_2O)	Vacuum (in. Hg)
1	START	0.000	0		678.920			1.0	10.0
	MIDWAY			81		94	84		
	STOP	5.000	8:57		684.022				
	DELTA *	5.000	8.95		5.102				
2	START	0.000	0		742.401			2.0	10.0
	MIDWAY			81		101	88		
	STOP	5.000	6:32		747.507				
	DELTA *	5.000	6.53		5.106				
3	START	0.000	0		723.868			3.0	10.0
	MIDWAY			82		103	90		
	STOP	5.000	5:20		728.993				
	DELTA *	5.000	5.33		5.125				

*: Express final elapsed time in decimal format

Differential Pressure Gauges (check one): X Inclined Manometers _____ Magnehelic Gauges

	Run #1	Run #2	Run #3	Avg.
BP (in. Hg)	29.19	29.19	29.19	
Time (min)	8.95	6.53	5.33	
Tw (°F)	81	81	82	
Vw (cf)	5.000	5.000	5.000	
Ti (°F)	94	101	103	
To (°F)	84	88	90	
ΔH (in. H2O)	1.00	2.00	3.00	
Vm (dcf)	5.102	5.106	5.125	
ΔH@ (in. H2O)	1.872	1.979	1.977	1.943
Y (Post-test)	0.9920	0.9986	0.9942	0.9949

ΔH@ = 0.0317 * ΔH * [(Tw+460) * Time]^2 / BP * (To + 460) * (Vw)^2

Y = Vw * BP * [(Ti+460+To+460)/2] / Vm * [BP+(ΔH/13.6)] * (Tw+460)

DRY GAS METER CALIBRATION DATA SHEET

METER BOX NO. APEX - 14 JPS
CALIBRATION DATE October 10, 2003
BAROMETRIC PRESSURE (in. Hg) 29.18

CHECK ONE: PRE-TEST ____ POST-TEST X
CALIBRATED BY JPS

Dry Gas Meter Leak Check	Vacuum Side: Orifice Diff. Pres. ΔH (in. H_2O)	Vacuum (in. Hg)	Dry Gas Meter Leak Rate (cfm)	
	00	26.0	<0.001	< 0.01

Pressure Side: Orifice Diff. Pressure Steady ?		Orifice Diff. Pres. ΔH (in. H_2O)
Y: ✓	N:	7.3

Thermocouple Check: Ti (°F) 75 To (°F) 75 Ambient Temp (°F) 73

Tolerance: Δ <= 2°F from Ambient Temp.

RUN NO.		WET TEST METER: Gas Volume Vw (cf)	Elapsed Time (min.)	Meter Temp. Tw (°F)	DRY GAS METER: Gas Volume Vd (dcf)	Inlet Temp. Ti (°F)	Outlet Temp. To (°F)	Orifice Diff. Pres. ΔH (in. H_2O)	Vacuum (in. Hg)
1	START	0.000	0		242.047			3.5	12.0
	MIDWAY			73		96	84		
	STOP	5.044	4:57		247.089				
	DELTA *	5.044	4.95		5.042				
2	START	0.000	0		207.089			3.5	12.0
	MIDWAY			73		96	84		
	STOP	5.044	4:57		212.134				
	DELTA *	5.044	4.95		5.045				
3	START	0.000	0		212.134			3.5	12.0
	MIDWAY			73		96	84		
	STOP	5.044	4:56		217.192				
	DELTA *	5.044	4.93		5.058				

*: Express final elapsed time in decimal format

Differential Pressure Gauges (check one): X Inclined Manometers ____ Magnehelic Gauges

	Run #1	Run #2	Run #3	Avg.
BP (in. Hg)	29.18	29.18	29.18	
Time (min)	4.95	4.95	4.93	
Tw (°F)	73	73	73	
Vw (cf)	5.000	5.000	5.000	
Ti (°F)	96	96	96	
To (°F)	84	84	84	
ΔH (in. H2O)	3.50	3.50	3.50	
Vm (dcf)	5.042	5.045	5.058	
Y (Pre-test)				0.9949
ΔH@ (in. H2O)	1.946	1.946	1.930	1.941
Y (Post-test)	1.0144	1.0137	1.0111	1.0131
ΔY (%)				1.8% <= 5%

$$\Delta H@ = \frac{0.0317 * \Delta H * [(Tw+460) * Time]^2}{BP * (To + 460) * (Vw)^2}$$

$$Y = \frac{Vw * BP * [(Ti+460+To+460)/2]}{Vm * [BP+(\Delta H/13.6)] * (Tw+460)}$$

ADVANCED TECHNOLOGY SYSTEMS, INC. - PITTSBURGH, PA
ANALYTICAL REPORTING FORM - PARTICULATE MATTER

CLIENT U.S STEEL CLAIRTON WORKS	TEST DATE(S) 10-09-03
PLANT LOCATION CLAIRTON, PA.	DATE ANALYZED 10-10-13-03
UNIT(S) TESTED #3 SCREENING STATION BAGHOUSE EXHAUST	ANALYTICAL METHOD(S): U.S. EPA
PROJECT NUMBER 03-099-P.	(circle all applicable) (5) 202 201A

Test No.	Filter ID No.	Method 5 Filter Weight Units (g)	Method 5 Front-Half Acetone Rinse Residue Weight Units (g)	Method 202 Back-Half Water-Soluble Residue Weight Units ( )	Method 202 Back-Half $MeCl_2$-Soluble Residue Weight Units ( )	Method 201A Cyclone Head Weight > PM_{10} (if required) Units ( )	Method 201A Front-Half Acetone Rinse Residue Weight - PM_{10} Units ( )	Units ( )
CLR-#355B								
-M5-1	2686	0.1307	0.0047					
CLR-#355B								
-M5-2	2700	0.1398	0.0036					
CLR-#355B								
-M5-3	2701	0.1061	0.0086					
CLR-ACE-								
BLANK-			0.0003					

Analyst's Signature Kelly G. Date 10-13-03

Comments:

ED_002508A_00000522-00025

ATS

ADVANCED TECHNOLOGY SYSTEMS, INC.
639 ALPHA DRIVE, R.I.D.C. PARK
PITTSBURGH, PA 15238
(412)967-1900 FAX (412)967-1911

CHAIN OF CUSTODY RECORD

PROJECT NUMBER 03-099
PROJECT NAME U.S. Steel Clairton Works
ANALYTICAL LAB ATS
DELIVER TO Kelly Agola
COMMENTS
No. 3 Screening Station Baghouse Exhaust Duct

ANALYSES TO BE CONDUCTED: US EPA Reference Method 05

SAMPLE IDENTIFICATION NUMBER	SAMPLE COLLECTION DATE	SAMPLE COLLECTION TIME	NUMBER OF CONTAINERS	COMPOSITE OR GRAB	US EPA Reference Method 05	REMARKS OR OBSERVATIONS
CLR-#355B-M5-1	10-09-03	0941 →	1	Comp.	✓	Glass Fiber Filter # 2686
↓		1058 EDT	1	✓	✓	Front Half Acetone Rinse
CLR-#355B-M5	10-09-03	1201	1	Comp.	✓	Glass Fiber Filter #2700
-2		1303	1	✓	✓	Front Half Acetone Rinse.
CLR-#355B-M5	10-09-03	1346	1	Comp	✓	Glass Fiber Filter #2701
-3		1447	1	✓	✓	Front Half Acetone Rinse.
CLR-355B-Acetone	10-9-03	1500	1	Grab	✓	Acetone Blank.

RELINQUISHED BY (SIGNATURE)	DATE	TIME	RECEIVED BY (SIGNATURE)	DATE	TIME	ICE CHEST #
Daniel A. Hadgan	10/09/03	1505	Kelly Agola	10/9/03	1506	
						CHEST TEMP.
						TAG #

ATS 10/98

ED_002508A_00000522-00026

PROCESS GAS TESTING CALCULATIONS - ISOKINETIC SAMPLING

CLIENT: U.S. Steel Clairton Works — TEST DATE: 10/9/03

TEST SITE: No. 3 Screening Station Baghouse Exhaust Stack — TEST NO.: CLR-#3SSB- M5-1

Filter No.: 2686
Probe No.: 3-3

Input Parameters (excluding analytical data)

A.	Barometric Pressure (in. Hg)	29.45
B.	Process Gas Static Pressure (in. H2O)	0.60
C.	Pitot Tube Coefficient	0.84
D.	Dry Gas Meter Calibration Factor	0.9949
»»»	Is the Duct Round (Y/N)?	Y
E.	Duct Diameter (in.) - for round duct	16.0
F.	Duct Width (in.) - for rectangular duct	0
G.	Duct Depth (in.) - for rectangular duct	0
H.	Nozzle Diameter (in.)	0.219
I.	Average ΔP (in. H2O) = [(ΔP^0.5)avg]^2 - for flows	1.54
J.	Average ΔP (in. H2O) = [(ΔP^0.5)avg]^2 - for isokinetic variation	1.54
K.	Average ΔH (in. H2O)	3.88
L.	Average Process Gas Temperature (°F)	69
M.	Average Dry Gas Meter Temperature (°F)	75
N.	Dry Gas Composition (should total to 100%)	
	Carbon Dioxide (%)	0.0
	Oxygen (%)	21.0
	Nitrogen (%)	79.0
	Carbon Monoxide (%)	0.0
	Hydrogen (%)	0.0
	Methane (%)	0.0
	Ethane (%)	0.0
	Argon (%)	0.0
O.	Sample Time (min)	60
P.	Total H2O Mass Collected in Impingers (g)	38.2
Q.	Metered Gas Volume (dcf)	61.851

Calculated Parameters (excluding analytical data)

R.	Absolute Process Gas Pressure (in. Hg)	29.49	[A+(B/13.6)]
S.	Absolute Meter Pressure (in. Hg)	29.74	[A+(K/13.6)]
T.	Duct Area (ft.^2)	1.40E+00	[Pi*E²/(4*144) or F*G/144]
U.	Nozzle Area (ft.^2)	2.62E-04	[Pi*H²/(4*144)]
V.	Average Absolute Process Gas Temperature (R)	529	[L+460]
W.	Average Absolute Dry Gas Meter Temperature (R)	535	[M+460]
X.	Dry Gas Volume Sampled (dscf)	60.356	[Q*D*(528/W)*(S/29.92)]
Y.	H2O Vapor Condensed (scf)	1.801	[P*0.04715]
Z.	Calculated Percent H2O in Gas Stream (%)	2.9	[100*Y/(X+Y)]
AA.	Theoretical Maximum Percent H2O in Gas Stream (%) (empirical equation derived from EPA QA Handbook Vol. III, S3.3.6, T6.1A)	2.6	[100*Saturated Water Vapor Pressure / Stack Pressure]
BB.	Actual Percent H2O in Gas Stream (%)	2.6	[Calculated %H2O <= Theoretical Max. %H2O]
CC.	Process Gas Molecular Weight:		

Gas	% Volume / 100	* (1 - %H2O/100)	* Mol. Weight	= Wt./Mol
H2O	0.026		18	0.472
CO2	0.000	0.974	44	0.000
O2	0.210	0.974	32	6.544
N2	0.790	0.974	28	21.540
CO	0.000	0.974	28	0.000
H2	0.000	0.974	2	0.000
CH4	0.000	0.974	16	0.000
C2H6	0.000	0.974	30	0.000
Ar	0.000	0.974	40	0.000

	Process Gas Molecular Weight (lb/lb-mol)	28.56	
DD.	Average Process Gas Velocity (ft/sec)	7.06E+01	[85.49*C*[(I*V)/(R*CC)]^0.5]
EE.	Process Gas Volumetric Flow Rate (acfm)	5.91E+03	[DD*T*60]
FF.	Process Gas Volumetric Flow Rate (scfm)	5.81E+03	[EE*(528/V)*(R/29.92)]
GG.	Process Gas Volumetric Flow Rate (dscfm)	5.66E+03	[FF*(1-(BB/100))]
HH.	Isokinetic Variation (%)	95.1	[100*V*{(0.002669*P)+(Q*D*S/W)}] / [60*O*R*U*DD*{(J/I)^0.5}]

Particulate Matter Results (corrected for blank)

II.	Filter Weight (g)	0.1307	
JJ.	Front-Half Residue Weight (g)	0.0044	
KK.	Total Weight (g)	0.1351	[II+JJ]
LL.	Concentration (gr/dscf)	0.0345	[(7000/454)*KK/X]
MM.	Mass Flow Rate (lb/hr)	1.68E+00	[LL*GG*60/7000]

PROCESS GAS TESTING CALCULATIONS - ISOKINETIC SAMPLING

CLIENT: U.S. Steel Clairton Works — TEST DATE: 10/9/03

TEST SITE: No. 3 Screening Station Baghouse Exhaust Stack — TEST NO.: CLR-#3SSB- M5-2

Filter No.: 2700
Probe No.: 3-3

Input Parameters (excluding analytical data)

A.	Barometric Pressure (in. Hg)	29.45
B.	Process Gas Static Pressure (in. H2O)	0.60
C.	Pitot Tube Coefficient	0.84
D.	Dry Gas Meter Calibration Factor	0.9949
»»»	Is the Duct Round (Y/N)?	Y
E.	Duct Diameter (in.) - for round duct	16.0
F.	Duct Width (in.) - for rectangular duct	0
G.	Duct Depth (in.) - for rectangular duct	0
H.	Nozzle Diameter (in.)	0.219
I.	Average ΔP (in. H2O) = [(ΔP^0.5)avg]^2 - for flows	1.53
J.	Average ΔP (in. H2O) = [(ΔP^0.5)avg]^2 - for isokinetic variation	1.53
K.	Average ΔH (in. H2O)	3.98
L.	Average Process Gas Temperature (°F)	81
M.	Average Dry Gas Meter Temperature (°F)	93
N.	Dry Gas Composition (should total to 100%)	
	Carbon Dioxide (%)	0.0
	Oxygen (%)	21.0
	Nitrogen (%)	79.0
	Carbon Monoxide (%)	0.0
	Hydrogen (%)	0.0
	Methane (%)	0.0
	Ethane (%)	0.0
	Argon (%)	0.0
O.	Sample Time (min)	60
P.	Total H2O Mass Collected in Impingers (g)	41.2
Q.	Metered Gas Volume (dcf)	64.770

Calculated Parameters (excluding analytical data)

R.	Absolute Process Gas Pressure (in. Hg)	29.49	[A+(B/13.6)]
S.	Absolute Meter Pressure (in. Hg)	29.74	[A+(K/13.6)]
T.	Duct Area (ft.^2)	1.40E+00	[Pi*E²/(4*144) or F*G/144]
U.	Nozzle Area (ft.^2)	2.62E-04	[Pi*H²/(4*144)]
V.	Average Absolute Process Gas Temperature (R)	541	[L+460]
W.	Average Absolute Dry Gas Meter Temperature (R)	553	[M+460]
X.	Dry Gas Volume Sampled (dscf)	61.217	[Q*D*(528/W)*(S/29.92)]
Y.	H2O Vapor Condensed (scf)	1.943	[P*0.04715]
Z.	Calculated Percent H2O in Gas Stream (%)	3.1	[100*Y/(X+Y)]
AA.	Theoretical Maximum Percent H2O in Gas Stream (%) (empirical equation derived from EPA QA Handbook Vol. III, S3.3.6, T6.1A)	3.8	[100*Saturated Water Vapor Pressure / Stack Pressure]
BB.	Actual Percent H2O in Gas Stream (%)	3.1	[Calculated %H2O <= Theoretical Max. %H2O]
CC.	Process Gas Molecular Weight:		

Gas	% Volume / 100	* (1 - %H2O/100)	* Mol. Weight	= Wt./Mol
H2O	0.031		18	0.554
CO2	0.000	0.969	44	0.000
O2	0.210	0.969	32	6.513
N2	0.790	0.969	28	21.440
CO	0.000	0.969	28	0.000
H2	0.000	0.969	2	0.000
CH4	0.000	0.969	16	0.000
C2H6	0.000	0.969	30	0.000
Ar	0.000	0.969	40	0.000

	Process Gas Molecular Weight (lb/lb-mol)	28.51	
DD.	Average Process Gas Velocity (ft/sec)	7.12E+01	[85.49*C*[(I*V)/(R*CC)]^0.5]
EE.	Process Gas Volumetric Flow Rate (acfm)	5.96E+03	[DD*T*60]
FF.	Process Gas Volumetric Flow Rate (scfm)	5.74E+03	[EE*(528/V)*(R/29.92)]
GG.	Process Gas Volumetric Flow Rate (dscfm)	5.56E+03	[FF*(1-(BB/100))]
HH.	Isokinetic Variation (%)	97.9	[100*V*{(0.002669*P)+(Q*D*S/W)}] / [60*O*R*U*DD*{(J/I)^0.5}]

Particulate Matter Results (corrected for blank)

II.	Filter Weight (g)	0.1398	
JJ.	Front-Half Residue Weight (g)	0.0033	
KK.	Total Weight (g)	0.1431	[II+JJ]
LL.	Concentration (gr/dscf)	0.0360	[(7000/454)*KK/X]
MM.	Mass Flow Rate (lb/hr)	1.72E+00	[LL*GG*60/7000]

PROCESS GAS TESTING CALCULATIONS - ISOKINETIC SAMPLING

CLIENT: U.S. Steel Clairton Works — TEST DATE: 10/9/03

TEST SITE: No. 3 Screening Station Baghouse Exhaust Stack — TEST NO.: CLR-#3SSB- M5-3

Filter No.: 2701
Probe No.: 3-3

Input Parameters (excluding analytical data)

A.	Barometric Pressure (in. Hg)	29.45
B.	Process Gas Static Pressure (in. H2O)	0.60
C.	Pitot Tube Coefficient	0.84
D.	Dry Gas Meter Calibration Factor	0.9949
»»»	Is the Duct Round (Y/N)?	Y
E.	Duct Diameter (in.) - for round duct	16.0
F.	Duct Width (in.) - for rectangular duct	0
G.	Duct Depth (in.) - for rectangular duct	0
H.	Nozzle Diameter (in.)	0.219
I.	Average ΔP (in. H2O) = [(ΔP^0.5)avg]^2 - for flows	1.43
J.	Average ΔP (in. H2O) = [(ΔP^0.5)avg]^2 - for isokinetic variation	1.43
K.	Average ΔH (in. H2O)	3.75
L.	Average Process Gas Temperature (°F)	90
M.	Average Dry Gas Meter Temperature (°F)	90
N.	Dry Gas Composition (should total to 100%)	
	Carbon Dioxide (%)	0.0
	Oxygen (%)	21.0
	Nitrogen (%)	79.0
	Carbon Monoxide (%)	0.0
	Hydrogen (%)	0.0
	Methane (%)	0.0
	Ethane (%)	0.0
	Argon (%)	0.0
O.	Sample Time (min)	60
P.	Total H2O Mass Collected in Impingers (g)	46.1
Q.	Metered Gas Volume (dcf)	62.800

Calculated Parameters (excluding analytical data)

R.	Absolute Process Gas Pressure (in. Hg)	29.49	[A+(B/13.6)]
S.	Absolute Meter Pressure (in. Hg)	29.73	[A+(K/13.6)]
T.	Duct Area (ft.^2)	1.40E+00	[Pi*E²/(4*144) or F*G/144]
U.	Nozzle Area (ft.^2)	2.62E-04	[Pi*H²/(4*144)]
V.	Average Absolute Process Gas Temperature (R)	550	[L+460]
W.	Average Absolute Dry Gas Meter Temperature (R)	550	[M+460]
X.	Dry Gas Volume Sampled (dscf)	59.558	[Q*D*(528/W)*(S/29.92)]
Y.	H2O Vapor Condensed (scf)	2.174	[P*0.04715]
Z.	Calculated Percent H2O in Gas Stream (%)	3.5	[100*Y/(X+Y)]
AA.	Theoretical Maximum Percent H2O in Gas Stream (%) (empirical equation derived from EPA QA Handbook Vol. III, S3.3.6, T6.1A)	4.8	[100*Saturated Water Vapor Pressure / Stack Pressure]
BB.	Actual Percent H2O in Gas Stream (%)	3.5	[Calculated %H2O <= Theoretical Max. %H2O]
CC.	Process Gas Molecular Weight:		

Gas	% Volume / 100	* (1 - %H2O/100)	* Mol. Weight	= Wt./Mol
H2O	0.035		18	0.634
CO2	0.000	0.965	44	0.000
O2	0.210	0.965	32	6.483
N2	0.790	0.965	28	21.341
CO	0.000	0.965	28	0.000
H2	0.000	0.965	2	0.000
CH4	0.000	0.965	16	0.000
C2H6	0.000	0.965	30	0.000
Ar	0.000	0.965	40	0.000

	Process Gas Molecular Weight (lb/lb-mol)	28.46	
DD.	Average Process Gas Velocity (ft/sec)	6.95E+01	[85.49*C*[(I*V)/(R*CC)]^0.5]
EE.	Process Gas Volumetric Flow Rate (acfm)	5.83E+03	[DD*T*60]
FF.	Process Gas Volumetric Flow Rate (scfm)	5.52E+03	[EE*(528/V)*(R/29.92)]
GG.	Process Gas Volumetric Flow Rate (dscfm)	5.32E+03	[FF*(1-(BB/100))]
HH.	Isokinetic Variation (%)	99.5	[100*V*{(0.002669*P)+(Q*D*S/W)}] / [60*O*R*U*DD*{(J/I)^0.5}]

Particulate Matter Results (corrected for blank)

II.	Filter Weight (g)	0.1061	
JJ.	Front-Half Residue Weight (g)	0.0083	
KK.	Total Weight (g)	0.1144	[II+JJ]
LL.	Concentration (gr/dscf)	0.0296	[(7000/454)*KK/X]
MM.	Mass Flow Rate (lb/hr)	1.35E+00	[LL*GG*60/7000]