Pushing Inspection
Chester Environmental
Clairton Works

Battery: 19

Foreman: Fetch

Crew: G

Name: Spiker

Date: 4-1-98

OVEN	TIME	I. PUSH SECONDS MAX. >= 20% OPAC	II. TRAVEL SECONDS MAX. > 10% OPAC	COMMENTS:
B20	719	:0 = 15%	:0 = 5%	

Date:	USEPA METHOD 9	Source Data
Observer:	Criteria Determination	
Time Break:		
Time End:		

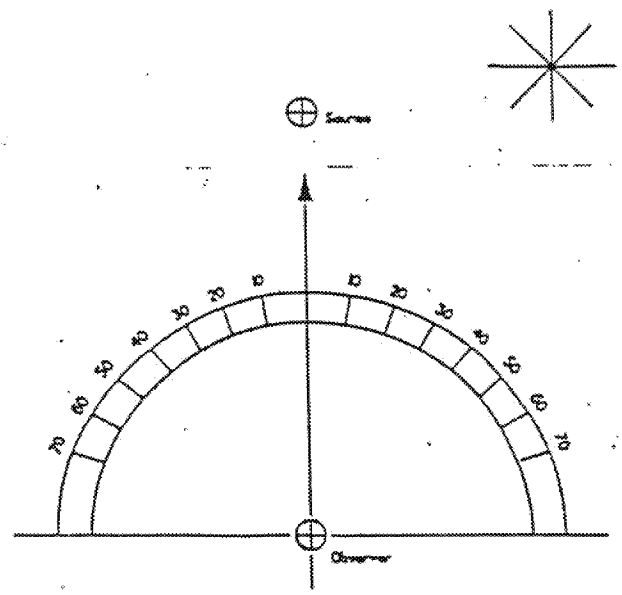

NOTE: Column #I represents fugitive emissions from the coke collecting car, coke guide and area between the coke guide and jamb, and emissions form the by-pass duct to the push.

Column #II represents emissions from the coke collecting car and by-pass duct during travel.

Pushing Inspection
Chester Environmental
Clairton Works

Battery: 19

Foreman: FETCH

Crew: C

Name: [illegible]

Date: 4-2-98

OVEN	TIME	I. PUSH SECONDS MAX. >= 20% OPAC	II. TRAVEL SECONDS MAX. > 10% OPAC	COMMENTS:
A-22	7:10	:00 5%	:00 0	COKE LINE AND FALE AT TOP HOOK

Date:	USEPA METHOD 9	Source Data
Observer:	Opacity Determination	
Time Begin:		
Time End:		

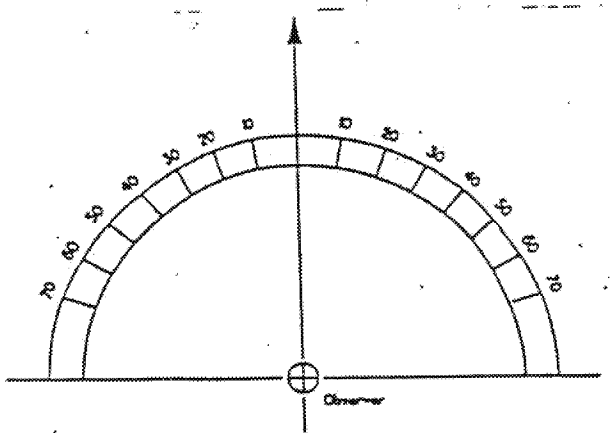

NOTE: Column #I represents fugitive emissions from the coke collecting car, coke guide and area between the coke guide and jamb, and emissions form the by-pass duct to the push.

Column #II represents emissions from the coke collecting car and by-pass duct during travel.

Pushing Inspection
Chester Environmental
Clairton Works

Battery: 19

Foreman: C. Fetch

Crew: C

Name: [illegible]

Date: 4-3-98

OVEN	TIME	I. PUSH SECONDS MAX. >= 20% OPAC	II. TRAVEL SECONDS MAX. > 10% OPAC	COMMENTS:
C26	7:38	0-15%	0-10%	View Blocked

Date:	USEPA METHOD 9	Source Data
Observer:	Opacity Determination	
Time Begin:		
Time End:		

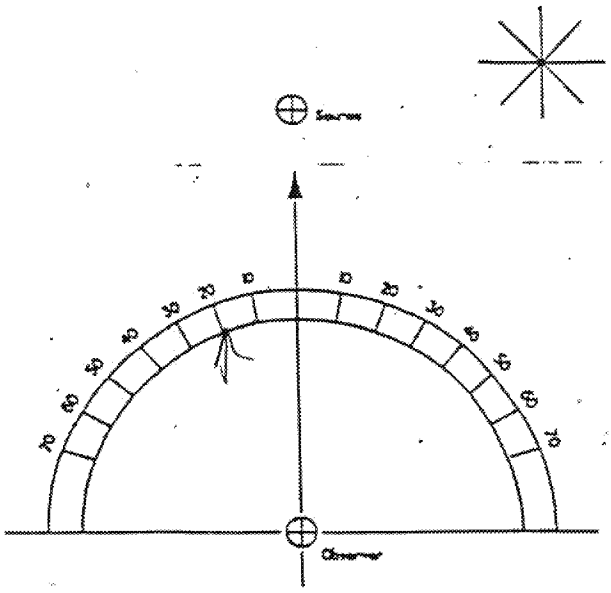

NOTE: Column #I represents fugitive emissions from the coke collecting car, coke guide and area between the coke guide and jamb, and emissions form the by-pass duct to the push.

Column #II represents emissions from the coke collecting car and by-pass duct during travel.

Pushing Inspection
Chester Environmental
Clairton Works

Battery: 19

Foreman: FETCH

Crew: C

Name: [illegible]

Date: 4/4/98

OVEN	TIME	I. PUSH SECONDS MAX. >= 20% OPAC	II. TRAVEL SECONDS MAX. > 10% OPAC	COMMENTS:
B-26	7:50	:0 15	:0 5	Coke Face Door Blocked

Date:
Observer:
Time Begin:
Time End:

USEPA METHOD 9
Criteria Determination

Source Data

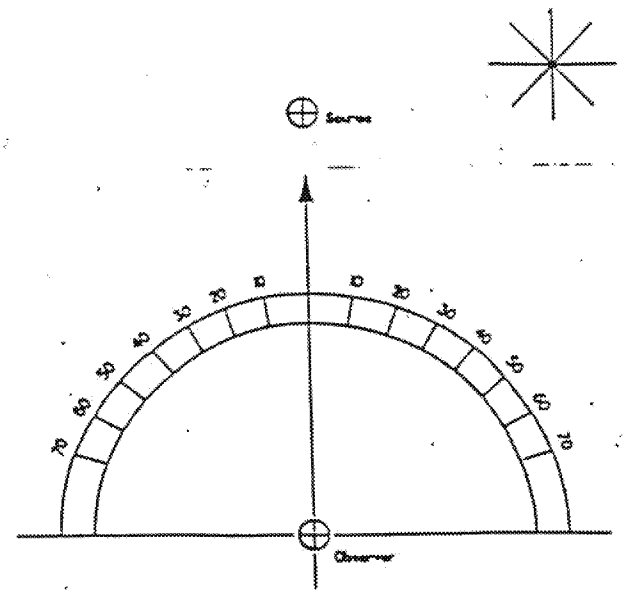

NOTE: Column #I represents fugitive emissions from the coke collecting car, coke guide and area between the coke guide and jamb, and emissions form the by-pass duct to the push.

Column #II represents emissions from the coke collecting car and by-pass duct during travel.

Pushing Inspection
Chester Environmental
Clairton Works

Battery: 19

Foreman: SERSON

Crew: B

Name: [illegible]

Date: 4/5/98

OVEN	TIME	I. PUSH SECONDS MAX. >= 20% OPAC	II. TRAVEL SECONDS MAX. > 10% OPAC	COMMENTS:
A-6	7:36	:0 15%	:0 5%	Coke Grace Knew Blocked

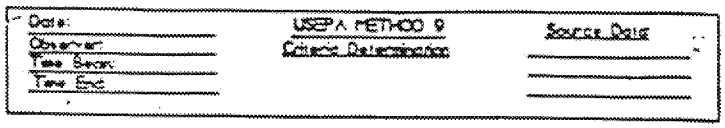

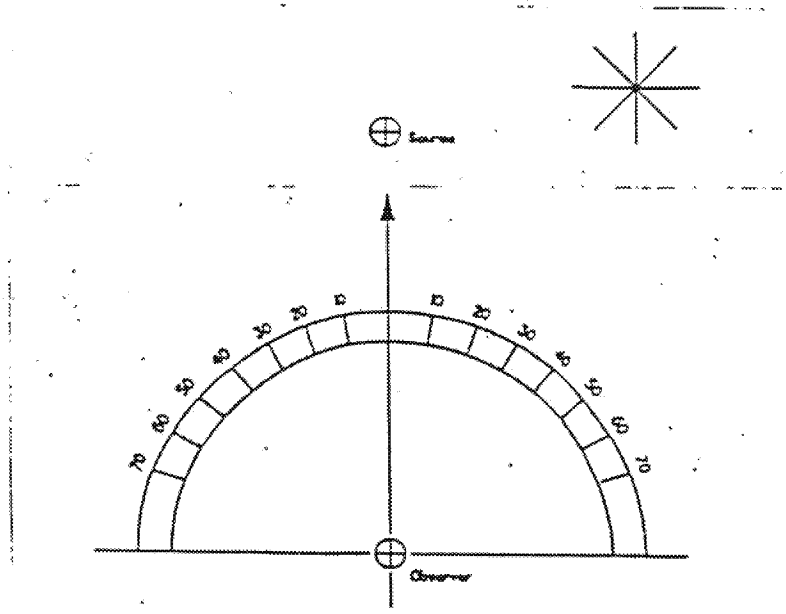

NOTE: Column #I represents fugitive emissions from the coke collecting car, coke guide and area between the coke guide and jamb, and emissions form the by-pass duct to the push.

Column #II represents emissions from the coke collecting car and by-pass duct during travel.

Pushing Inspection
Chester Environmental
Clairton Works

Battery: 19
Foreman: WASSIC
Crew: D

Name: GEORGAKIS
Date: 4-6-98

OVEN	TIME	I. PUSH SECONDS MAX. >= 20% OPAC	II. TRAVEL SECONDS MAX. > 10% OPAC	COMMENTS:
B27	719	0 15	0 10	COKE LINE
				9
				COKE FACE
				VIEW
				BLOCKED

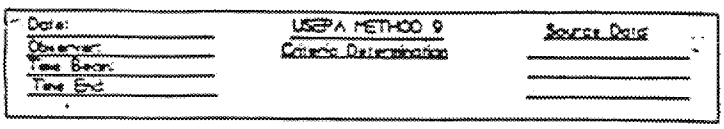

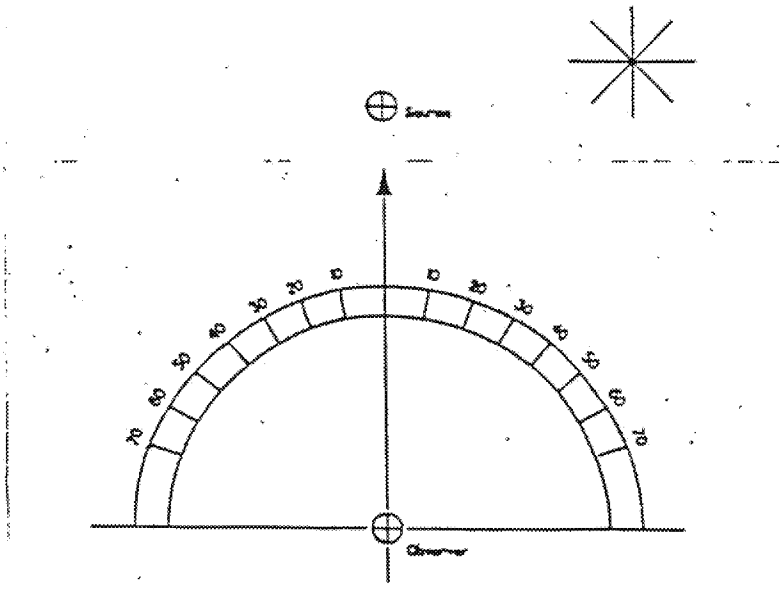

NOTE: Column #I represents fugitive emissions from the coke collecting car, coke guide and area between the coke guide and jamb, and emissions form the by-pass duct to the push.

Column #II represents emissions from the coke collecting car and by-pass duct during travel.

Pushing Inspection
Chester Environmental
Clairton Works

Battery: 19

Foreman: VASSIL

Crew: D

Name: Spicer

Date: 4-7-98

OVEN	TIME	I. PUSH SECONDS MAX. >= 20% OPAC	II. TRAVEL SECONDS MAX. > 10% OPAC	COMMENTS:
82	824	:0 = 15%	:0 = 16%	

Date:
Observer:
Time Start:
Time End:

USEPA METHOD 9
Opacity Determination

Source Data

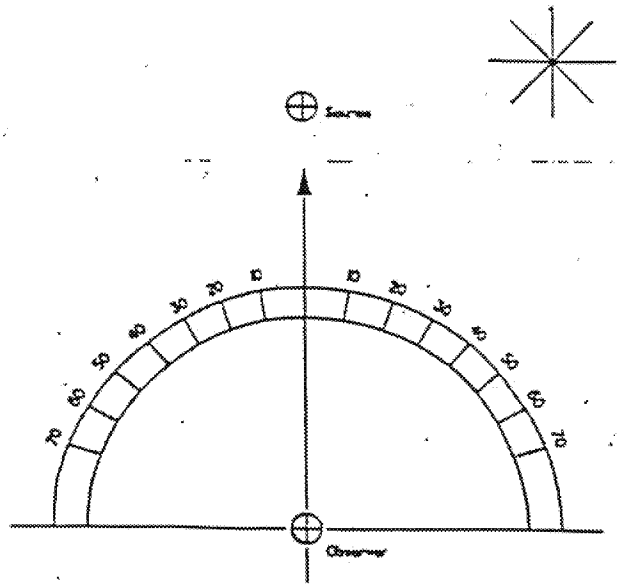

NOTE: Column #I represents fugitive emissions from the coke collecting car, coke guide and area between the coke guide and jamb, and emissions form the by-pass duct to the push.

Column #II represents emissions from the coke collecting car and by-pass duct during travel.

CHESTER ENGINEERS

VISIBLE EMISSIONS OBSERVATION FORM

#19 BATT. DRAFT STACK

OBSERVER: James E. McKay

DATE: 01 April 1998

FACILITY: USEC Clairton Works

READING START TIME: 10:10

READING END TIME: 11:10

OBSERVATION POINT: Wabash Bath House Area #19 Battery Draft

SOURCE INFO: Stack

DISTANCE: a 400 ft

DIRECTION FROM: 2 S-E of

HEIGHT: a 200 ft

WIND SPEED: 7 - mph

WIND DIRECTION: ≥ S-W

TEMPERATURE: 59°

SKY CONDITION: Mostly Cloudy

BACKGROUND: Sky

READING CONDITIONS: fair

COLOR OF EMISSIONS: —

TOTAL # OF READINGS: 240

[redacted]	:00	:15	:30	:45
00	0	0	0	0
01	0	0	0	0
02	0	0	0	0
03	0	0	0	0
04	0	0	0	0
15 05	0	0	0	0
06	0	0	0	0
07	0	0	0	0
08	0	0	0	0
09	0	0	0	0
20 10	0	0	0	0
11	0	0	0	0
12	0	0	0	0
13	0	0	0	0
14	0	0	0	0
25 15	0	0	0	0
16	0	0	0	0
17	0	0	0	0
18	0	0	0	0
19	0	0	0	0
30 20	0	0	0	0
21	0	0	0	0
22	0	0	0	0
23	0	0	0	0
24	0	0	0	0
35 25	0	0	0	0
26	0	0	0	0
27	0	0	0	0
28	0	0	0	0
29	0	0	0	0

[redacted]	:00	:15	:30	:45
30 40	0	0	0	0
31	0	0	0	0
32	0	0	0	0
33	0	0	0	0
34	0	0	0	0
35 45	0	0	0	0
36	0	0	0	0
37	0	0	0	0
38	0	0	0	0
39	0	0	0	0
40 50	0	0	0	0
41	0	0	0	0
42	0	0	0	0
43	0	0	0	0
44	0	0	0	0
45 55	0	0	0	0
46	0	0	0	0
47	0	0	0	0
48	0	0	0	0
49	0	0	0	0
50 60	0	0	0	0
51	0	0	0	0
52	0	0	0	0
53	0	0	0	0
54	0	0	0	0
55 65	0	0	0	0
56	0	0	0	0
57	0	0	0	0
58	0	0	0	0
59	0	0	0	0

NO. READINGS [redacted]: 0 20%

NO. READINGS [redacted]: 0 60%

GREATEST OPACITY: 0

NOTES / COMMENTS:

CHESTER ENGINEERS

VISIBLE EMISSIONS OBSERVATION FORM

#19 BAY 4, DRAFT, Stack

OBSERVER: James E. McKay

DATE: 02 April, 1998

FACILITY: USX Clairton Works

READING START TIME: 10:10

READING END TIME: 11:10

OBSERVATION POINT: Wabash Bath House Area #19 BAUERY DRAFT

SOURCE INFO: Stack

DISTANCE: a 400 ft

DIRECTION FROM: ≥ S E q

HEIGHT: a 200 ft

WIND SPEED: 24 - 29 - mph

WIND DIRECTION: → W

TEMPERATURE: 48°

SKY CONDITION: Cloudy

BACKGROUND: Sky

READING CONDITIONS: fair

COLOR OF EMISSIONS: —

TOTAL # OF READINGS: 240

	:00	:15	:30	:45
00	0	0	0	0
01	0	0	0	0
02	0	0	0	0
03	0	0	0	0
04	0	0	0	0
15 05	0	0	0	0
06	0	0	0	0
07	0	0	0	0
08	0	0	0	0
09	0	0	0	0
20 10	0	0	0	0
11	0	0	0	0
12	0	0	0	0
13	0	0	0	0
14	0	0	0	0
25 15	0	0	0	0
16	0	0	0	0
17	0	0	0	0
18	0	0	0	0
19	0	0	0	0
30 20	0	0	0	0
21	0	0	0	0
22	0	0	0	0
23	0	0	0	0
24	0	0	0	0
35 25	0	0	0	0
26	0	0	0	0
27	0	0	0	0
28	0	0	0	0
29	0	0	0	0

	:00	:15	:30	:45
30 40	0	0	0	0
31	0	0	0	0
32	0	0	0	0
33	0	0	0	0
34	0	0	0	0
35 45	0	0	0	0
36	0	0	0	0
37	0	0	0	0
38	0	0	0	0
39	0	0	0	0
40 50	0	0	0	0
41	0	0	0	0
42	0	0	0	0
43	0	0	0	0
44	0	0	0	0
45 55	0	0	0	0
46	0	0	0	0
47	0	0	0	0
48	0	0	0	0
49	0	0	0	0
50 00	0	0	0	0
51	0	0	0	0
52	0	0	0	0
53	0	0	0	0
54	0	0	0	0
55 05	0	0	0	0
56	0	0	0	0
57	0	0	0	0
58	0	0	0	0
59	0	0	0	0

NO. READINGS [redacted]: — 20%

NO. READINGS [redacted]: — 60%

GREATEST OPACITY: —

NOTES / COMMENTS:

CHESTER ENGINEERS

VISIBLE EMISSIONS OBSERVATION FORM

#19 Batt. Draft Stack

OBSERVER: James E. McKay

DATE: 03 April, 1998

FACILITY: USX Clairton Wrks

READING START TIME: 10 10

READING END TIME: 11 10

OBSERVATION POINT: Wabash Bath House Area #19 Battery Draft

SOURCE INFO: Stack

DISTANCE: @ 400 ft

DIRECTION FROM: > S-E of

HEIGHT: @ 200 ft

WIND SPEED: 8-M-P-H

WIND DIRECTION: > N

TEMPERATURE: 46°

SKY CONDITION: Cloudy

BACKGROUND: Sky

READING CONDITIONS: Fair

COLOR OF EMISSIONS: Black

TOTAL # OF READINGS: 240

	:00	:15	:30	:45
00	0	0	0	0
01	0	0	0	0
02	0	0	0	0
03	0	0	0	0
04	0	0	0	0
05	0	0	0	0
06	0	0	0	0
07	0	0	0	0
08	0	0	0	0
09	0	0	0	0
10	0	0	0	0
11	0	0	0	0
12	0	0	0	0
13	0	0	0	0
14	0	0	0	0
15	0	0	0	0
16	0	0	0	0
17	0	0	0	0
18	0	0	0	0
19	0	0	0	0
20	0	0	0	0
21	0	0	0	0
22	0	0	0	0
23	0	0	0	0
24	0	0	0	0
25	0	0	0	0
26	0	0	0	0
27	0	0	0	0
28	0	0	0	0
29	0	0	0	0

	:00	:15	:30	:45
30	0	0	0	0
31	0	0	0	0
32	0	0	0	0
33	0	0	0	0
34	0	0	0	0
35	0	0	0	0
36	0	0	0	0
37	0	0	0	0
38	0	0	0	0
39	0	0	0	0
40	0	0	0	0
41	0	0	0	0
42	0	0	0	0
43	0	0	0	0
44	0	0	0	0
45	0	0	0	0
46	5	5	5	5
47	0	0	5	5
48	5	5	5	5
49	0	0	0	0
50	0	0	0	0
51	0	0	0	0
52	5	5	5	5
53	5	5	5	5
54	5	5	5	5
55	5	5	5	5
56	5	5	5	5
57	5	5	5	5
58	5	5	5	5
59	5	5	5	5

NO. READINGS [redacted]: 0 20%

NO. READINGS [redacted]: 0 60%

GREATEST OPACITY: 5%

NOTES / COMMENTS:

CHESTER ENGINEERS

VISIBLE EMISSIONS OBSERVATION FORM

#19 BAH, DRAFT, STACK

OBSERVER: Jane Smedley

DATE: 04 April, 1998

FACILITY: USS Clairton Works

READING START TIME: 0955

READING END TIME: 1055

OBSERVATION POINT: Wabash Bath House Area #19 BAHERY DRAFT

SOURCE INFO: Stack

DISTANCE: a 400ft

DIRECTION FROM: → S-E of

HEIGHT: a 200ft

WIND SPEED: 15 m.p.h

WIND DIRECTION: → N E

TEMPERATURE: 44°

SKY CONDITION: Cloudy

BACKGROUND: Sky

READING CONDITIONS: Fair

COLOR OF EMISSIONS: Black

TOTAL # OF READINGS: 240

[redacted]	:00	:15	:30	:45
00	0	0	0	0
01	10	10	10	10
02	10	10	10	10
03	10	10	10	0
04	0	0	0	0
05	5	10	10	10
06	10	10	10	10
07	10	10	10	10
08	10	10	10	10
09	10	10	10	10
10	5	5	0	0
11	0	0	0	0
12	0	0	0	0
13	5	5	10	10
14	10	10	10	10
15	10	10	10	15
16	15	15	15	15
17	15	20	15	15
18	15	15	15	15
19	15	15	10	10
20	10	10	10	10
21	10	10	10	10
22	10	15	15	15
23	10	10	10	10
24	10	10	10	10
25	10	10	10	10
26	10	10	10	10
27	15	15	15	15
28	20	20	15	15
29	15	15	15	15

[redacted]	:00	:15	:30	:45
30	10	10	10	5
31	5	5	5	5
32	0	0	0	0
33	0	0	0	0
34	0	0	0	0
35	0	0	0	0
36	0	0	0	0
37	0	0	0	0
38	0	0	0	0
39	0	0	0	0
40	0	0	0	0
41	0	0	0	0
42	0	0	0	0
43	0	0	0	0
44	0	0	0	0
45	0	0	0	0
46	0	0	0	0
47	0	0	0	0
48	0	0	0	0
49	0	0	0	0
50	0	0	0	0
51	0	0	0	0
52	0	0	0	0
53	0	0	0	0
54	0	0	0	0
55	0	0	0	0
56	0	0	0	0
57	0	0	0	0
58	0	0	0	0
59	0	0	0	0

NO. READINGS [redacted]: 03 20%

NO. READINGS [redacted]: 0 60%

GREATEST OPACITY: 20%

NOTES / COMMENTS:

CHESTER ENGINEERS

VISIBLE EMISSIONS OBSERVATION FORM

#19 BATT. DRAFT STACK

OBSERVER: Jame E. McKay

DATE: 05 APRIL 1998

FACILITY: USX Clairton Works

READING START TIME: 10:05

READING END TIME: 11:05

OBSERVATION POINT: Wabash Bath House Area #19 Battery Draft

SOURCE INFO: Stack

DISTANCE: a 400 ft

DIRECTION FROM: → S-E of

HEIGHT: a 200 ft

WIND SPEED: 8-mph

WIND DIRECTION: → N

TEMPERATURE: 41°

SKY CONDITION: Dry-Cloudy

BACKGROUND: Sky

READING CONDITIONS: Fair

COLOR OF EMISSIONS: Black

TOTAL # OF READINGS: 240

[redacted]	:00	:15	:30	:45
00	5	5	10	10
01	10	10	10	10
02	10	10	10	10
03	10	10	10	10
04	10	10	10	10
10 05	10	10	10	10
06	10	10	10	10
07	10	5	5	5
08	5	5	5	5
09	0	0	0	0
15 10	0	0	0	0
11	0	0	0	0
12	0	0	0	0
13	0	0	0	0
14	0	0	0	0
29 15	0	0	0	0
16	0	0	0	0
17	0	0	0	0
18	0	0	0	0
19	0	0	0	0
35 20	0	0	0	0
21	0	0	0	0
22	0	0	0	0
23	0	0	0	0
24	0	0	0	0
40 25	0	0	0	0
26	0	0	0	0
27	0	0	0	0
28	0	0	0	0
29	0	0	0	0

[redacted]	:00	:15	:30	:45
30 25	0	0	0	0
31	0	0	0	0
32	0	0	0	0
33	0	0	0	0
34	0	0	0	0
35 30	0	0	0	0
36	0	0	0	0
37	0	0	0	0
38	0	0	0	0
39	5	5	5	5
40 35	5	5	5	5
41	5	5	10	10
42	10	10	10	10
43	10	10	10	10
44	10	10	5	5
45 40	5	5	10	10
46	10	10	10	10
47	10	10	10	10
48	10	10	10	5
49	5	5	0	0
50 45	0	0	0	0
51	0	0	0	0
52	0	0	0	0
53	0	0	0	0
54	0	0	0	0
55 50	0	0	0	0
56	0	0	0	0
57	0	0	0	0
58	0	0	0	0
59	0	0	0	0

NO. READINGS [redacted]: ____ 20%

NO. READINGS [redacted]: ____ 60%

GREATEST OPACITY: 10%

NOTES / COMMENTS:

CHESTER ENGINEERS

VISIBLE EMISSIONS OBSERVATION FORM

#19 BATT. DRAFT, Stack

OBSERVER: James E McCoy

DATE: 06 April, 1998

FACILITY: USX Clairton Wks

READING START TIME: 10:00

READING END TIME: 11:00

OBSERVATION POINT: Wabash Bath House Area #19 BATTERY DRAFT

SOURCE INFO: Stack

DISTANCE: @ 400 ft

DIRECTION FROM: → S-E of

HEIGHT: @ 200 ft

WIND SPEED: 6 - m.p.H

WIND DIRECTION: → NW

TEMPERATURE: 38°

SKY CONDITION: CLEAR

BACKGROUND: Sky

READING CONDITIONS: Fair

COLOR OF EMISSIONS: Black

TOTAL # OF READINGS: 240

[redacted]	:00	:15	:30	:45
00	0	0	0	0
01	0	0	0	0
02	0	0	0	0
03	0	0	0	0
04	0	0	0	0
05	0	0	0	0
06	0	0	0	0
07	0	0	0	0
08	0	0	0	0
09	0	0	0	0
10	0	0	0	0
11	0	0	5	5
12	5	5	10	10
13	5	5	0	0
14	0	0	0	0
15	0	0	0	0
16	0	0	0	0
17	0	0	0	0
18	0	0	0	0
19	0	0	0	0
20	0	0	0	0
21	0	0	0	0
22	0	0	0	0
23	0	0	0	0
24	0	0	0	0
25	0	0	0	0
26	0	0	0	0
27	0	0	0	0
28	0	0	0	0
29	0	0	0	0

[redacted]	:00	:15	:30	:45
30	0	0	0	0
31	0	0	0	0
32	0	0	0	0
33	0	0	0	0
34	0	0	0	0
35	0	0	0	0
36	0	0	0	0
37	0	0	0	0
38	0	0	0	0
39	0	0	0	0
40	0	0	0	0
41	0	0	0	0
42	0	0	0	0
43	0	0	0	0
44	0	0	0	0
45	0	0	0	0
46	0	0	0	0
47	0	0	0	0
48	0	0	0	0
49	0	0	0	0
50	0	0	0	0
51	0	0	0	0
52	0	0	0	0
53	0	0	0	0
54	0	0	0	0
55	0	0	0	0
56	0	0	0	0
57	0	0	0	0
58	0	0	0	0
59	0	0	0	0

NO. READINGS [redacted]: 0 20%

NO. READINGS [redacted]: 0 40%

GREATEST OPACITY: 10%

NOTES / COMMENTS:

CHESTER ENGINEERS

VISIBLE EMISSIONS OBSERVATION FORM

19 STACK

OBSERVER: [illegible]

DATE: 4/7/98

FACILITY: CLAIRTON USX

READING START TIME: 10:05

READING END TIME: 11:05

OBSERVATION POINT: SOUTH-19 BATTERY

SOURCE INFO: 19 STACK

DISTANCE: 525'

DIRECTION FROM: SOUTH

HEIGHT: 200

WIND SPEED: 5

WIND DIRECTION: VARIABLE

TEMPERATURE: 48

SKY CONDITION: CLEAR

BACKGROUND: SKY

READING CONDITIONS: GOOD

COLOR OF EMISSIONS: BLACK

TOTAL # OF READINGS: 240

NO. READINGS [redacted]: 75 20%

NO. READINGS [redacted]: 0 60%

GREATEST OPACITY: 35%

		:00	:15	:30	:45
05	00	10	10	10	10
	01	10	10	10	5
	02	5	5	5	5
	03	5	5	5	5
	04	5	5	5	5
10	05	5	5	5	5
	06	5	5	5	5
	07	5	5	5	5
	08	5	5	5	5
	09	5	5	5	5
15	10	5	5	5	5
	11	5	5	5	5
	12	5	5	5	5
	13	5	5	5	5
	14	5	5	5	5
20	15	5	5	5	5
	16	5	5	10	10
	17	10	10	10	10
	18	10	10	10	10
	19	5	5	5	5
25	20	5	5	5	5
	21	5	5	5	5
	22	5	5	5	5
	23	10	10	10	10
	24	5	5	5	5
30	25	5	5	5	5
	26	10	10	10	10
	27	10	10	10	10
	28	5	5	5	5
	29	5	5	5	5

		:00	:15	:30	:45	
35	30	10	10	10	10	
	31	10	10	10	10	
	32	10	10	10	10	
	33	10	10	10	10	
	34	10	10	10	10	
40	35	10	20	25	25	
	36	20	25	25	30	
	37	35	30	30	30	B
	38	30	30	30	30	18
	39	30	30	30	30	
45	40	35	35	35	35	
	41	35	35	35	35	
	42	35	35	35	35	
	43	25	25	25	25	
	44	15	20	20	15	
50	45	10	10	10	10	
	46	10	10	10	10	
	47	10	10	10	10	
	48	10	10	10	10	
	49	10	10	10	10	
55	50	10	10	30	30	
	51	30	30	20	20	B.
	52	20	30	30	30	
	53	20	25	25	25	
	54	25	25	25	25	
00	55	20	20	20	20	
	56	20	20	20	20	
	57	20	20	20	20	
	58	20	20	20	20	
	59	20	20	20	20	

NOTES / COMMENTS: B-18 & B20 Change

Pushing Inspection
Chester Environmental
Clairton Works

Battery: 20 Name: Spiker

Foreman: Fetch Date: 4-1-98

Crew: C

OVEN	TIME	I. PUSH SECONDS MAX. >= 20% OPAC	II. TRAVEL SECONDS MAX. > 10% OPAC	COMMENTS:
B24	744	:0 = 15%	:0 = 10%	

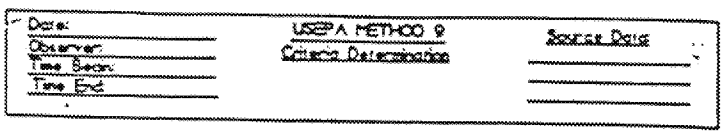

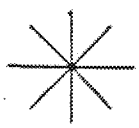

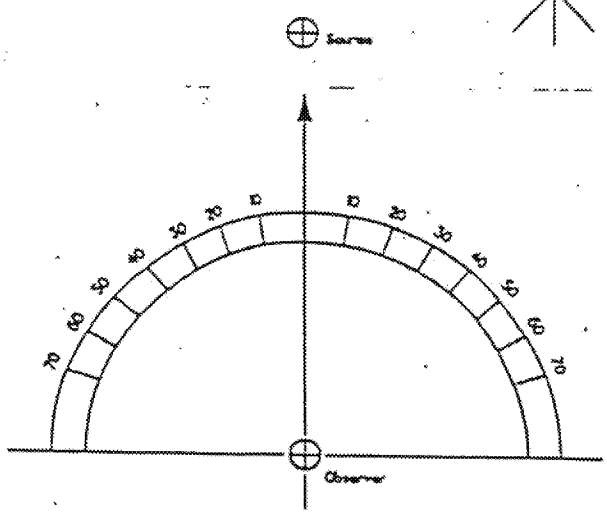

NOTE: Column #I represents fugitive emissions from the coke collecting car, coke guide and area between the coke guide and jamb, and emissions form the by-pass duct to the push.

Column #II represents emissions from the coke collecting car and by-pass duct during travel.

Pushing Inspection
Chester Environmental
Clairton Works

Battery: 20

Foreman: Fetch

Crew: C

Name: [illegible]

Date: 4-2-98

OVEN	TIME	I. PUSH SECONDS MAX. >= 20% OPAC	II. TRAVEL SECONDS MAX. > 10% OPAC	COMMENTS:
A-22	7:15	:24 90%	:00 5%	coke line and face at top latch
				cold coke face

Date:	USEPA METHOD 9	Source Data
Observer:	Opacity Determination	
Time Begin:		
Time End:		

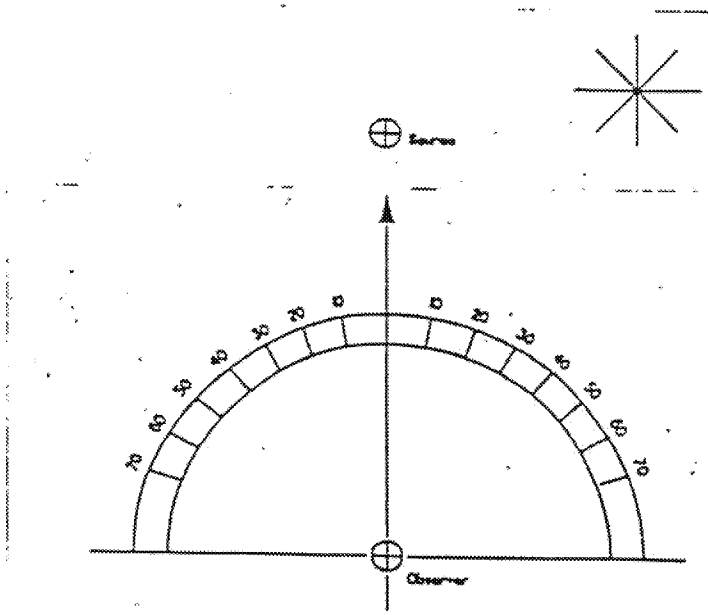

NOTE: Column #I represents fugitive emissions from the coke collecting car, coke guide and area between the coke guide and jamb, and emissions form the by-pass duct to the push.

Column #II represents emissions from the coke collecting car and by-pass duct during travel.

Pushing Inspection
Chester Environmental
Clairton Works

Battery: 20

Foreman: C. Fitch

Crew: C

Name: [illegible]

Date: 4-3-98

OVEN	TIME	I. PUSH SECONDS MAX. >= 20% OPAC	II. TRAVEL SECONDS MAX. > 10% OPAC	COMMENTS:
C26	7:44	0-10 %	0-10 %	View Blocked

Date:
Observer:
Time Begin:
Time End:

USEPA METHOD 9
Source Determination

Source Data

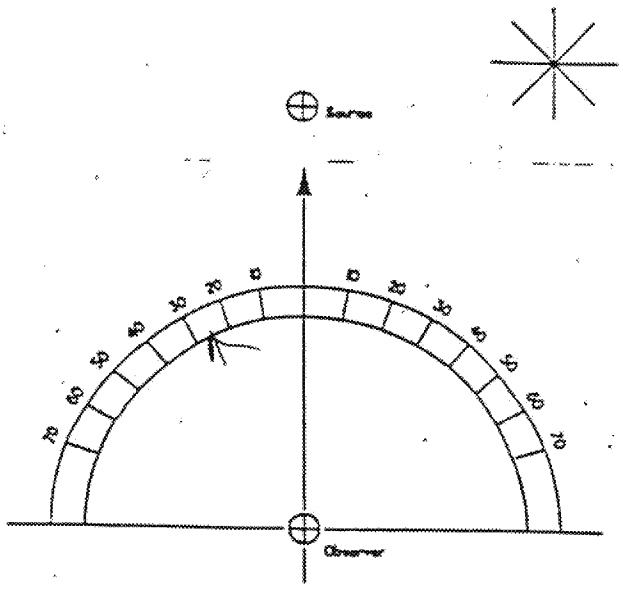

NOTE: Column #I represents fugitive emissions from the coke collecting car, coke guide and area between the coke guide and jamb, and emissions form the by-pass duct to the push.

Column #II represents emissions from the coke collecting car and by-pass duct during travel.

Pushing Inspection
Chester Environmental
Clairton Works

Battery: 20

Foreman: FETCH

Crew: C

Name: D. Pastorek

Date: 4/4/98

OVEN	TIME	I. PUSH SECONDS MAX. >= 20% OPAC	II. TRAVEL SECONDS MAX. > 10% OPAC	COMMENTS:
C-3	8:33	10 - 85°	15 - 30°	Emission to Way Through Push

Date:
Observer:
Time Start:
Time End:

USEPA METHOD 9
Opacity Determination

Source Data

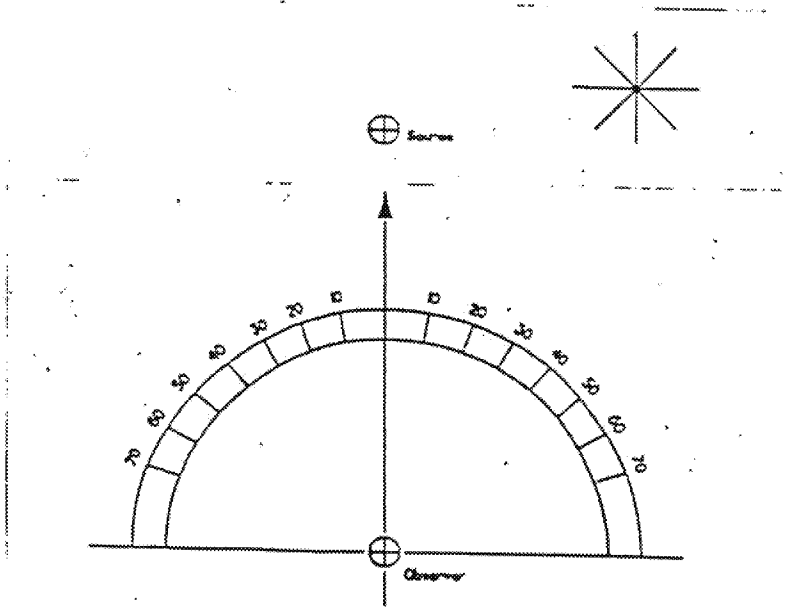

NOTE: Column #I represents fugitive emissions from the coke collecting car, coke guide and area between the coke guide and jamb, and emissions form the by-pass duct to the push.

Column #II represents emissions from the coke collecting car and by-pass duct during travel.

Pushing Inspection
Chester Environmental
Clairton Works

Battery: 20

Foreman: SERSON

Crew: B

Name: [illegible]

Date: 4/5/98

OVEN	TIME	I. PUSH SECONDS MAX. >= 20% OPAC	II. TRAVEL SECONDS MAX. > 10% OPAC	COMMENTS:
A-6	7:41	:0 5%	:0 0%	Coke Face Never Blocked

Date:
Observer:
Time Begin:
Time End:

USEPA METHOD 9
Opacity Determination

Source Data

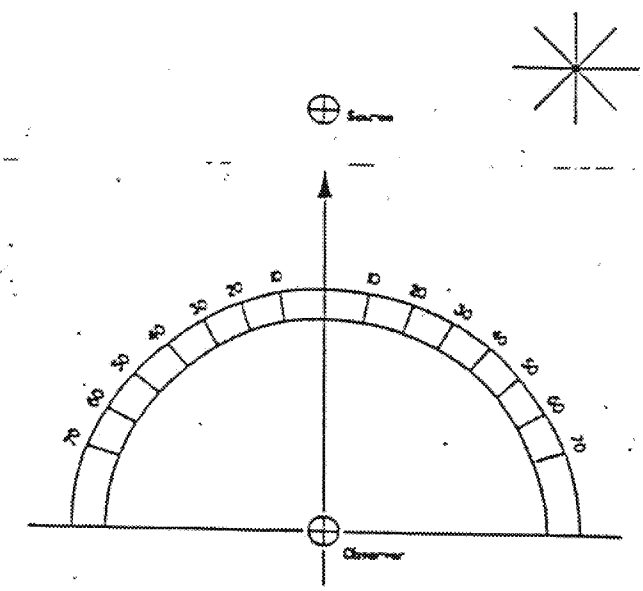

NOTE: Column #I represents fugitive emissions from the coke collecting car, coke guide and area between the coke guide and jamb, and emissions form the by-pass duct to the push.

Column #II represents emissions from the coke collecting car and by-pass duct during travel.

Pushing Inspection
Chester Environmental
Clairton Works

Battery: 20
Foreman: WASSIL
Crew: D

Name: GEORGAKIS
Date: 4-6-98

OVEN	TIME	I. PUSH SECONDS MAX. >= 20% OPAC	II. TRAVEL SECONDS MAX. > 10% OPAC	COMMENTS:
B25	711	0 0	0 0	COKE LINE
				2
				COKE FACE
				VIEW
				BLOCKED

Date:
Observer:
Time Begin:
Time End:

USEPA METHOD 9
Opacity Determination

Source Data

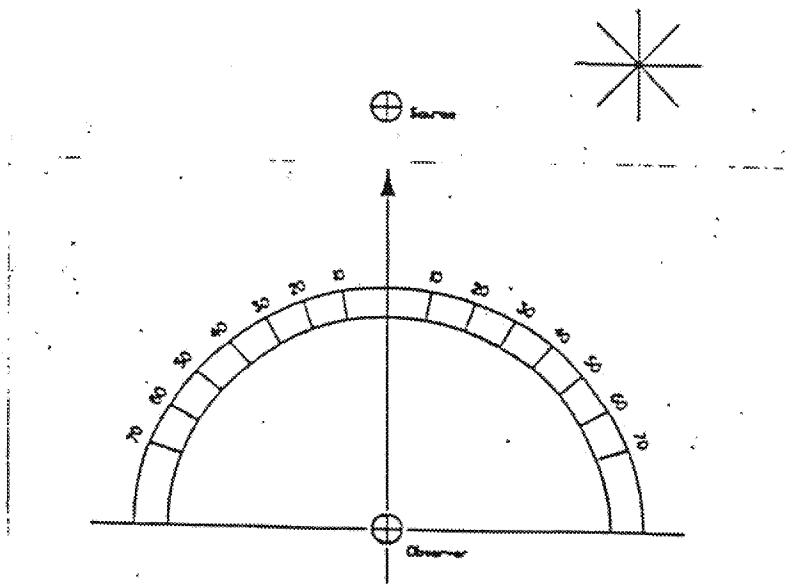

NOTE: Column #I represents fugitive emissions from the coke collecting car, coke guide and area between the coke guide and jamb, and emissions form the by-pass duct to the push.

Column #II represents emissions from the coke collecting car and by-pass duct during travel.

Pushing Inspection
Chester Environmental
Clairton Works

Battery: 20

Foreman: WASSIL

Crew: D

Name: Spiker

Date: ~~4-30-98~~ 4-7-98 BAC

OVEN	TIME	I. PUSH SECONDS MAX. >= 20% OPAC	II. TRAVEL SECONDS MAX. > 10% OPAC	COMMENTS:
A25	755	:0 = 10%	:0 = 10%	

Date:
Observer:
Time Begin:
Time End:

USEPA METHOD 9
Criteria Determination

Source Data

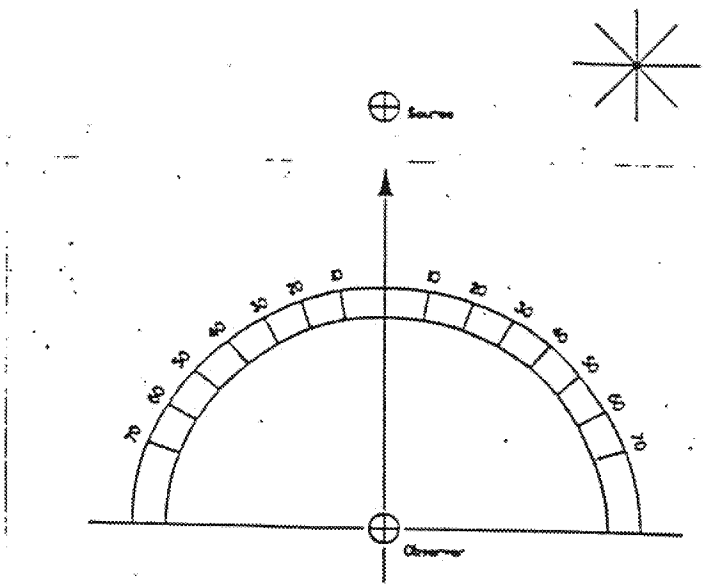

NOTE: Column #I represents fugitive emissions from the coke collecting car, coke guide and area between the coke guide and jamb, and emissions form the by-pass duct to the push.

Column #II represents emissions from the coke collecting car and by-pass duct during travel.

CHESTER ENGINEERS

VISIBLE EMISSIONS OBSERVATION FORM

#20 BAKERY DRAFT STACK

OBSERVER: James E. McKay

DATE: 01 April, 1998

FACILITY: USX Clairton WRks

READING START TIME: 11:10

READING END TIME: 12:10

OBSERVATION POINT: Wabash Bath House Area #20 BAKERY DRAFT

SOURCE INFO: Stack

DISTANCE: @ 450 ft

DIRECTION FROM: → S-W of

HEIGHT: @ 200 ft

WIND SPEED: 7 - M.P.H

WIND DIRECTION: → S-W

TEMPERATURE: 59°

SKY CONDITION: Pty Cloudy

BACKGROUND: Sky

READING CONDITIONS: Fair

COLOR OF EMISSIONS: Black

TOTAL # OF READINGS: 240

[redacted]	:00	:15	:30	:45
00	0	0	0	0
01	0	0	0	0
02	0	0	0	0
03	0	0	0	0
04	0	0	0	0
15 05	0	0	0	0
06	0	0	0	0
07	0	0	0	0
08	0	0	0	0
09	0	0	0	0
20 10	0	0	0	0
11	0	0	0	0
12	0	0	0	0
13	0	0	0	0
14	0	0	0	0
25 15	0	0	0	0
16	0	0	0	0
17	0	0	0	0
18	0	0	0	0
19	0	0	0	0
30 20	0	0	0	0
21	0	0	0	0
22	0	0	0	0
23	0	0	0	0
24	0	0	0	0
35 25	0	0	0	0
26	0	0	0	0
27	0	0	0	0
28	0	0	0	0
29	0	0	0	0

[redacted]	:00	:15	:30	:45
40 30	0	0	0	0
31	0	0	0	0
32	0	0	0	0
33	0	0	0	0
34	0	0	0	0
45 35	0	0	0	0
36	0	0	0	0
37	0	0	0	0
38	0	0	0	0
39	0	0	0	0
50 40	0	0	0	0
41	0	0	0	0
42	0	0	0	0
43	0	0	0	0
44	0	0	0	0
55 45	0	0	0	0
46	0	0	0	0
47	0	0	0	0
48	0	0	0	0
49	0	0	0	0
00 50	0	5	5	5
51	10	10	10	10
52	10	10	10	10
53	10	10	10	10
54	5	5	5	5
55 55	5	5	5	5
56	5	5	5	5
57	5	5	5	5
58	5	5	5	5
59	5	5	5	5

NO. READINGS [redacted]: 0 20%

NO. READINGS [redacted]: 0 60%

GREATEST OPACITY: 10%

NOTES / COMMENTS:

CHESTER ENGINEERS

VISIBLE EMISSIONS OBSERVATION FORM

#20 Bath DRAFT Stack

OBSERVER: Jame E. McKay

DATE: 02 April, 1998

FACILITY: USX Clairton Wks

READING START TIME: 11 10

READING END TIME: 12 10

OBSERVATION POINT: Wabash Bath House Area #20 Battery DRAFT

SOURCE INFO: Stack

DISTANCE: a 450 ft

DIRECTION FROM: → S.W.

HEIGHT: a 200 ft

WIND SPEED: 24-29 m.p.H

WIND DIRECTION: → W

TEMPERATURE: 48°

SKY CONDITION: Cloudy

BACKGROUND: Sky

READING CONDITIONS: fair

COLOR OF EMISSIONS: —

TOTAL # OF READINGS: 240

[redacted]	:00	:15	:30	:45
00	0	0	0	0
01	0	0	0	0
02	0	0	0	0
03	0	0	0	0
04	0	0	0	0
5 05	0	0	0	0
06	0	0	0	0
07	0	0	0	0
08	0	0	0	0
09	0	0	0	0
10	0	0	0	0
11	0	0	0	0
12	0	0	0	0
13	0	0	0	0
14	0	0	0	0
15	0	0	0	0
16	0	0	0	0
17	0	0	0	0
18	0	0	0	0
19	0	0	0	0
20	0	0	0	0
21	0	0	0	0
22	0	0	0	0
23	0	0	0	0
24	0	0	0	0
25	0	0	0	0
26	0	0	0	0
27	0	0	0	0
28	0	0	0	0
29	0	0	0	0

[redacted]	:00	:15	:30	:45
30	0	0	0	0
31	0	0	0	0
32	0	0	0	0
33	0	0	0	0
34	0	0	0	0
35	0	0	0	0
36	0	0	0	0
37	0	0	0	0
38	0	0	0	0
39	0	0	0	0
40	0	0	0	0
41	0	0	0	0
42	0	0	0	0
43	0	0	0	0
44	0	0	0	0
45	0	0	0	0
46	0	0	0	0
47	0	0	0	0
48	0	0	0	0
49	0	0	0	0
50	0	0	0	0
51	0	0	0	0
52	0	0	0	0
53	0	0	0	0
54	0	0	0	0
55	0	0	0	0
56	0	0	0	0
57	0	0	0	0
58	0	0	0	0
59	0	0	0	0

NO. READINGS [redacted]: — 20%

NO. READINGS [redacted]: — 60%

GREATEST OPACITY: —

NOTES / COMMENTS:

CHESTER ENGINEERS

VISIBLE EMISSIONS OBSERVATION FORM

#20 BATTERY DRAFT, STACK

OBSERVER: James E. McCoy

DATE: 03 April, 1998

FACILITY: 2154 Clinton WRK

READING START TIME: 11:10

READING END TIME: 12:10

OBSERVATION POINT: Wahsh Bath House Area #20 Battery DRAFT

SOURCE INFO: Stack

DISTANCE: a 450 ft

DIRECTION FROM: > S-E of

HEIGHT: a 200 ft

WIND SPEED: 8-mph

WIND DIRECTION: > N

TEMPERATURE: 48°

SKY CONDITION: PTL Cloudy

BACKGROUND: Sky

READING CONDITIONS: Fair

COLOR OF EMISSIONS: BLACK

TOTAL # OF READINGS: 240

	:00	:15	:30	:45
00	0	0	0	0
01	0	0	0	0
02	0	0	0	0
03	0	0	0	0
04	0	0	0	0
05	0	0	0	0
06	0	0	0	0
07	0	0	0	0
08	0	0	0	0
09	0	0	0	0
10	0	0	0	0
11	0	0	0	0
12	0	0	0	0
13	0	5	5	5
14	5	5	5	5
15	0	0	0	0
16	0	0	0	0
17	0	0	0	0
18	0	0	0	0
19	0	0	0	0
20	0	0	0	0
21	0	0	0	0
22	0	0	0	0
23	0	0	0	0
24	0	0	0	0
25	0	0	0	0
26	0	0	0	0
27	0	0	0	0
28	0	0	0	0
29	0	0	0	0

	:00	:15	:30	:45
30	0	0	0	0
31	0	0	0	0
32	0	0	0	0
33	0	0	0	0
34	0	0	5	5
35	5	5	5	5
36	5	5	5	5
37	5	5	5	5
38	0	0	0	0
39	0	0	0	0
40	0	0	0	0
41	0	0	0	0
42	0	0	0	0
43	0	0	0	0
44	0	0	0	0
45	0	0	0	0
46	0	0	0	0
47	0	0	0	0
48	0	0	0	0
49	0	0	0	0
50	0	0	0	0
51	0	0	0	0
52	0	0	0	0
53	0	0	0	0
54	0	0	0	0
55	0	0	0	0
56	0	0	5	5
57	5	5	5	5
58	5	0	0	0
59	0	0	0	0

NO. READINGS [redacted]: 0 20%

NO. READINGS [redacted]: 0 60%

GREATEST OPACITY: 5%

NOTES / COMMENTS:

CHESTER ENGINEERS

VISIBLE EMISSIONS OBSERVATION FORM

#20 BATH, DRAFT, STACK

OBSERVER: Jim E. McKay

DATE: 04 April, 1998

FACILITY: USX Clairton Works

READING START TIME: 10:55

READING END TIME: 11:55

OBSERVATION POINT: Wabash Bath House Area #20 BATHEY DRAFT

SOURCE INFO: Stack

DISTANCE: @ 450 ft

DIRECTION FROM: → S-E of

HEIGHT: @ 200 ft

WIND SPEED: 16 MPH

WIND DIRECTION: → N-E

TEMPERATURE: 45°

SKY CONDITION: Cloudy

BACKGROUND: Sky

READING CONDITIONS: Rain

COLOR OF EMISSIONS: —

TOTAL # OF READINGS: 240

[redacted]	:00	:15	:30	:45
00	0	0	0	0
01	0	0	0	0
02	0	0	0	0
03	0	0	0	0
04	0	0	0	0
05 50	0	0	0	0
06	0	0	0	0
07	0	0	0	0
08	0	0	0	0
09	0	0	0	0
10 55	0	0	0	0
11	0	0	0	0
12	0	0	0	0
13	0	0	0	0
14	0	0	0	0
15 0	0	0	0	0
16	0	0	0	0
17	0	0	0	0
18	0	0	0	0
19	0	0	0	0
20 5	0	0	0	0
21	0	0	0	0
22	0	0	0	0
23	0	0	0	0
24	0	0	0	0
25 20	0	0	0	0
26	0	0	0	0
27	0	0	0	0
28	0	0	0	0
29	0	0	0	0

[redacted]	:00	:15	:30	:45
30 35	0	0	0	0
31	0	0	0	0
32	0	0	0	0
33	0	0	0	0
34	0	0	0	0
35 30	0	0	0	0
36	0	0	0	0
37	0	0	0	0
38	0	0	0	0
39	0	0	0	0
40 35	0	0	0	0
41	0	0	0	0
42	0	0	0	0
43	0	0	0	0
44	0	0	0	0
45 40	0	0	0	0
46	0	0	0	0
47	0	0	0	0
48	0	0	0	0
49	0	0	0	0
50 45	0	0	0	0
51	0	0	0	0
52	0	0	0	0
53	0	0	0	0
54	0	0	0	0
55 50	0	0	0	0
56	0	0	0	0
57	0	0	0	0
58	0	0	0	0
59	0	0	0	0

NO. READINGS [redacted]: — 20%

NO. READINGS [redacted]: — 60%

GREATEST OPACITY: —

NOTES / COMMENTS:

CHESTER ENGINEERS

VISIBLE EMISSIONS OBSERVATION FORM

#20 BATT. DRAFT stack

OBSERVER: James E. McKay

DATE: 05 APR. 1, 1998

FACILITY: USX Clairton Works

READING START TIME: 11:05

READING END TIME: 12:05

OBSERVATION POINT: Wabash Bath House Area #20 Battery Draft

SOURCE INFO: Stack

DISTANCE: @ 450 ft

DIRECTION FROM: → S.E of

HEIGHT: @ 200 ft

WIND SPEED: 13-m-p-h

WIND DIRECTION: → N-W

TEMPERATURE: 46°

SKY CONDITION: PTL-Cloudy

BACKGROUND: Sky

READING CONDITIONS: Fair

COLOR OF EMISSIONS: Black

TOTAL # OF READINGS: 240

	:00	:15	:30	:45
00	0	0	0	0
01	0	0	0	0
02	0	0	0	0
03	0	0	0	0
04	0	0	0	0
10 05	0	0	0	0
06	0	0	0	0
07	0	0	0	0
08	0	0	0	0
09	0	0	0	0
10	0	0	0	0
11	0	0	0	0
12	0	0	0	0
13	0	0	0	0
14	0	0	0	0
15	0	0	0	0
16	0	0	0	0
17	0	0	0	0
18	0	0	0	0
19	0	0	0	0
20	10	10	15	15
21	25	25	35	25 B7
22	20	15	15	10
23	0	0	0	0
24	0	0	0	0
25	0	0	0	0
26	0	0	0	0
27	0	0	0	0
28	0	0	0	0
29	0	0	0	0

	:00	:15	:30	:45
30	0	0	0	0
31	0	0	0	0
32	0	0	0	0
33	0	0	0	0
34	0	0	0	0
35 40	0	0	0	0
36	0	0	0	0
37	10	15	15	25 B11
38	30	20	15	10
39	0	0	0	0
40	0	0	0	0
41	0	0	0	0
42	0	0	0	0
43	0	0	0	0
44	0	0	0	0
45 50	0	0	0	0
46	0	0	0	0
47	0	0	0	0
48	0	0	0	0
49	0	0	0	0
50	0	0	0	0
51	0	0	0	0
52	0	0	0	0
53	0	0	0	0
54	0	0	0	0
55	0	0	0	0
56	0	0	0	0
57	0	0	0	0
58	0	0	0	0
59	0	0	0	0

NO. READINGS [redacted]: 08 20%

NO. READINGS [redacted]: 0 60%

GREATEST OPACITY: 35%

NOTES / COMMENTS:

CHESTER ENGINEERS

VISIBLE EMISSIONS OBSERVATION FORM

#20 BATH DRAFT Stack

OBSERVER: James P. McCoy

DATE: 06 APRIL 1998

FACILITY: USX Clairton Works

READING START TIME: 11:00

READING END TIME: 12:00N

OBSERVATION POINT: Wakeah Bath House Area #20 BATHERY DRAFT

SOURCE INFO: Stack

DISTANCE: @ 450ft

DIRECTION FROM: ≥ S-E of

HEIGHT: @ 200ft

WIND SPEED: 6-m-p-H

WIND DIRECTION: ≥ W

TEMPERATURE: 43°

SKY CONDITION: CLEAR

BACKGROUND: Sky

READING CONDITIONS: Rain

COLOR OF EMISSIONS: —

TOTAL # OF READINGS: 240

NO. READINGS [redacted]: — 20%

NO. READINGS [redacted]: — 60%

GREATEST OPACITY: —

[redacted]	:00	:15	:30	:45
00	0	0	0	0
01	0	0	0	0
02	0	0	0	0
03	0	0	0	0
04	0	0	0	0
05	0	0	0	0
06	0	0	0	0
07	0	0	0	0
08	0	0	0	0
09	0	0	0	0
10	0	0	0	0
11	0	0	0	0
12	0	0	0	0
13	0	0	0	0
14	0	0	0	0
15	0	0	0	0
16	0	0	0	0
17	0	0	0	0
18	0	0	0	0
19	0	0	0	0
20	0	0	0	0
21	0	0	0	0
22	0	0	0	0
23	0	0	0	0
24	0	0	0	0
25	0	0	0	0
26	0	0	0	0
27	0	0	0	0
28	0	0	0	0
29	0	0	0	0

[redacted]	:00	:15	:30	:45
30	0	0	0	0
31	0	0	0	0
32	0	0	0	0
33	0	0	0	0
34	0	0	0	0
35	0	0	0	0
36	0	0	0	0
37	0	0	0	0
38	0	0	0	0
39	0	0	0	0
40	0	0	0	0
41	0	0	0	0
42	0	0	0	0
43	0	0	0	0
44	0	0	0	0
45	0	0	0	0
46	0	0	0	0
47	0	0	0	0
48	0	0	0	0
49	0	0	0	0
50	0	0	0	0
51	0	0	0	0
52	0	0	0	0
53	0	0	0	0
54	0	0	0	0
55	0	0	0	0
56	0	0	0	0
57	0	0	0	0
58	0	0	0	0
59	0	0	0	0

NOTES / COMMENTS:

CHESTER ENGINEERS

VISIBLE EMISSIONS OBSERVATION FORM

20 STACK

OBSERVER: Paul [illegible]

DATE: 4/7/98

FACILITY: CLAIRTON USX

READING START TIME: 11:05

READING END TIME: 12:05

OBSERVATION POINT: SOUTH-19 BATTERY

SOURCE INFO: 20 STACK

DISTANCE: 600'

DIRECTION FROM: SOUTH

HEIGHT: 200

WIND SPEED: 3

WIND DIRECTION: VARIABLE

TEMPERATURE: 52

SKY CONDITION: P. CLDY

BACKGROUND: SKY

READING CONDITIONS: FAIR

COLOR OF EMISSIONS: BLACK

TOTAL # OF READINGS: 240

	:00	:15	:30	:45
00	0	0	0	0
01	0	0	0	0
02	0	0	0	0
03	0	0	0	0
04	0	0	0	0
05	0	0	0	0
06	0	0	0	0
07	0	0	0	0
08	0	0	0	0
09	0	0	0	0
10	0	0	0	0
11	0	0	0	0
12	0	0	0	0
13	0	0	0	0
14	0	0	0	0
15	0	0	0	0
16	0	0	0	0
17	0	0	0	0
18	0	0	0	0
19	0	0	0	0
20	0	0	0	0
21	0	0	0	0
22	0	0	0	0
23	0	0	0	0
24	0	0	0	0
25	0	0	0	0
26	0	0	0	0
27	0	0	0	0
28	0	0	0	0
29	0	0	0	0

	:00	:15	:30	:45
30	0	0	0	0
31	0	0	0	0
32	0	0	0	0
33	0	0	0	0
34	0	0	0	0
35	0	0	0	0
36	0	0	0	0
37	0	0	0	0
38	0	0	0	0
39	0	0	0	0
40	0	0	0	0
41	0	0	0	0
42	0	0	0	0
43	0	0	0	0
44	0	0	0	0
45	0	0	0	0
46	0	0	0	0
47	0	0	0	0
48	0	0	0	0
49	0	0	0	0
50	0	0	0	0
51	0	0	0	0
52	0	0	0	0
53	0	0	0	0
54	0	0	0	0
55	0	0	0	0
56	0	0	0	0
57	0	0	0	0
58	0	0	0	0
59	0	0	0	0

NO. READINGS [redacted]: 0 20%

NO. READINGS [redacted]: 0 60%

GREATEST OPACITY: 0%

NOTES / COMMENTS: