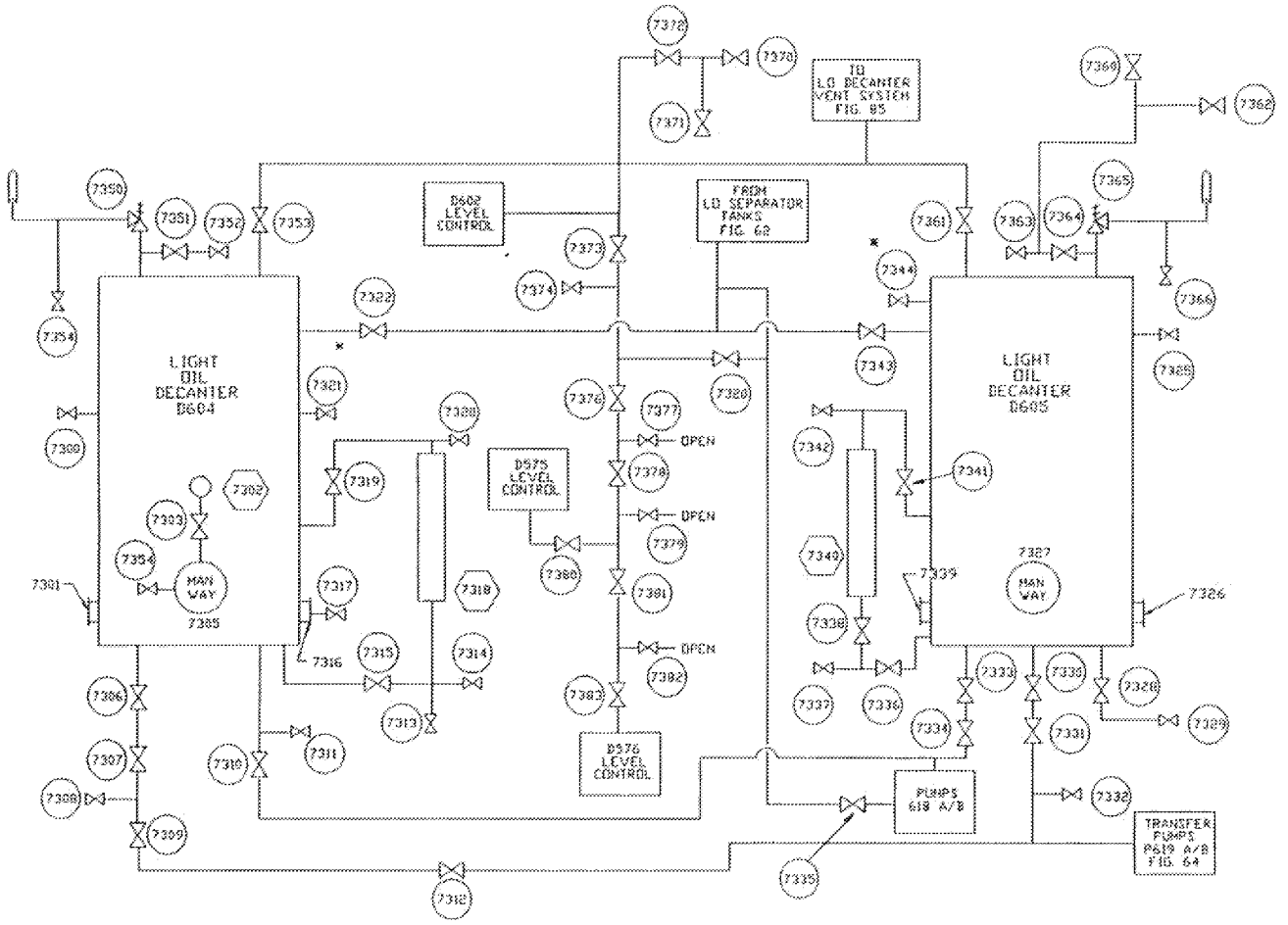

ADVANCED TECHNOLOGY SYSTEMS INC.

ATS

3000 TECH CENTER DRIVE
MONROEVILLE, PENNSYLVANIA 15146
TELEPHONE # (412) 829-2298

FIGURE 63
LIGHT OIL DECANTERS
BY-PRODUCT CONTROL ROOM #2
USX CLAIRTON COKE WORKS

DWG NO

SCALE

ED_002508A_00000398-00001

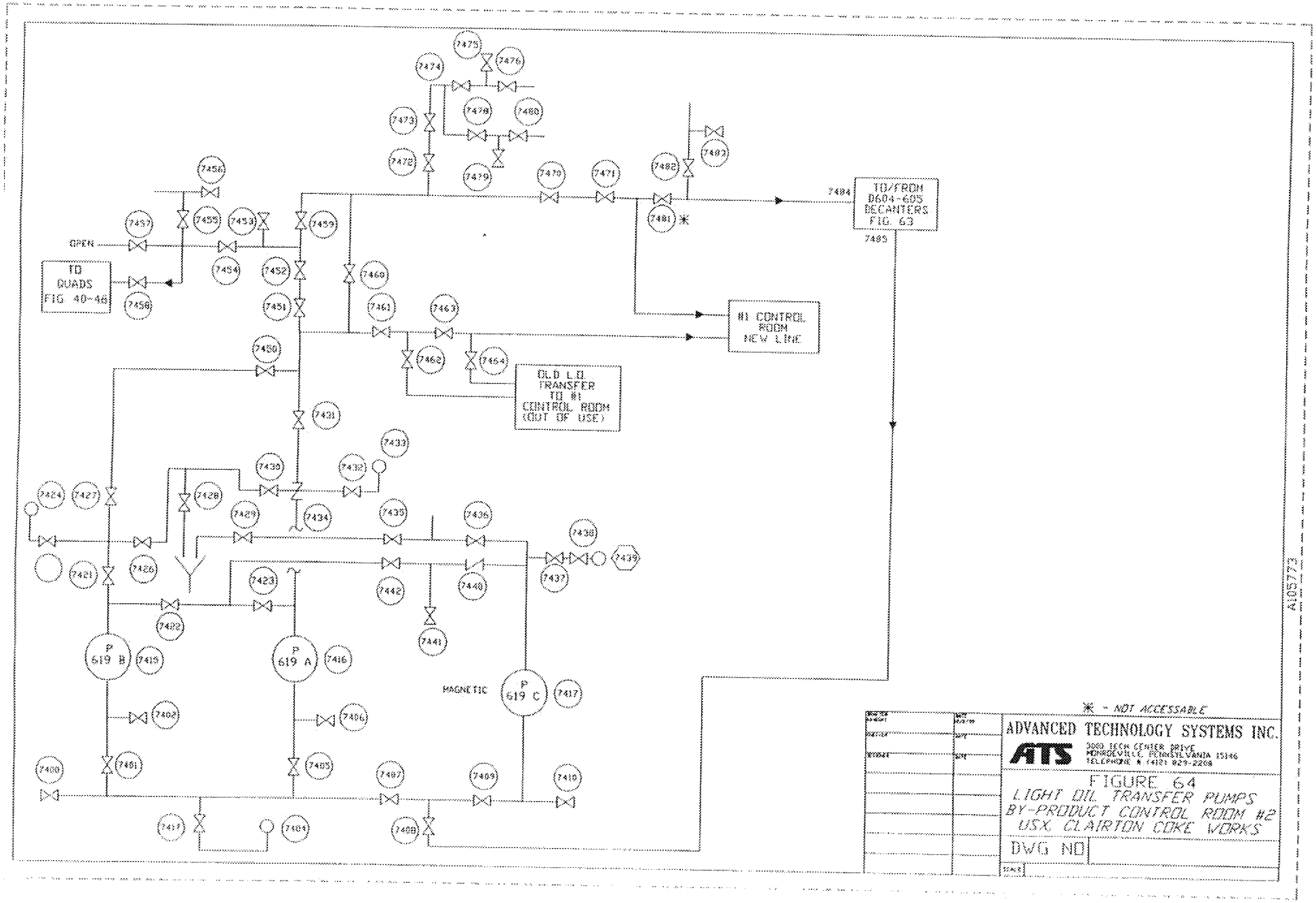
TO QUADS FIG 40-46
OPEN
TO/FROM D604-605 DECANTERS FIG. 63
#1 CONTROL ROOM NEW LINE
OLD L.O. TRANSFER TO #1 CONTROL ROOM (OUT OF USE)
P 619 B
P 619 A
P 619 C
MAGNETIC
* - NOT ACCESSABLE
ADVANCED TECHNOLOGY SYSTEMS INC.
ATS
3000 TECH CENTER DRIVE
MONROEVILLE, PENNSYLVANIA 15146
TELEPHONE # (412) 829-2209
FIGURE 64
LIGHT OIL TRANSFER PUMPS
BY-PRODUCT CONTROL ROOM #2
USX CLAIRTON COKE WORKS
DWG NO
A105773

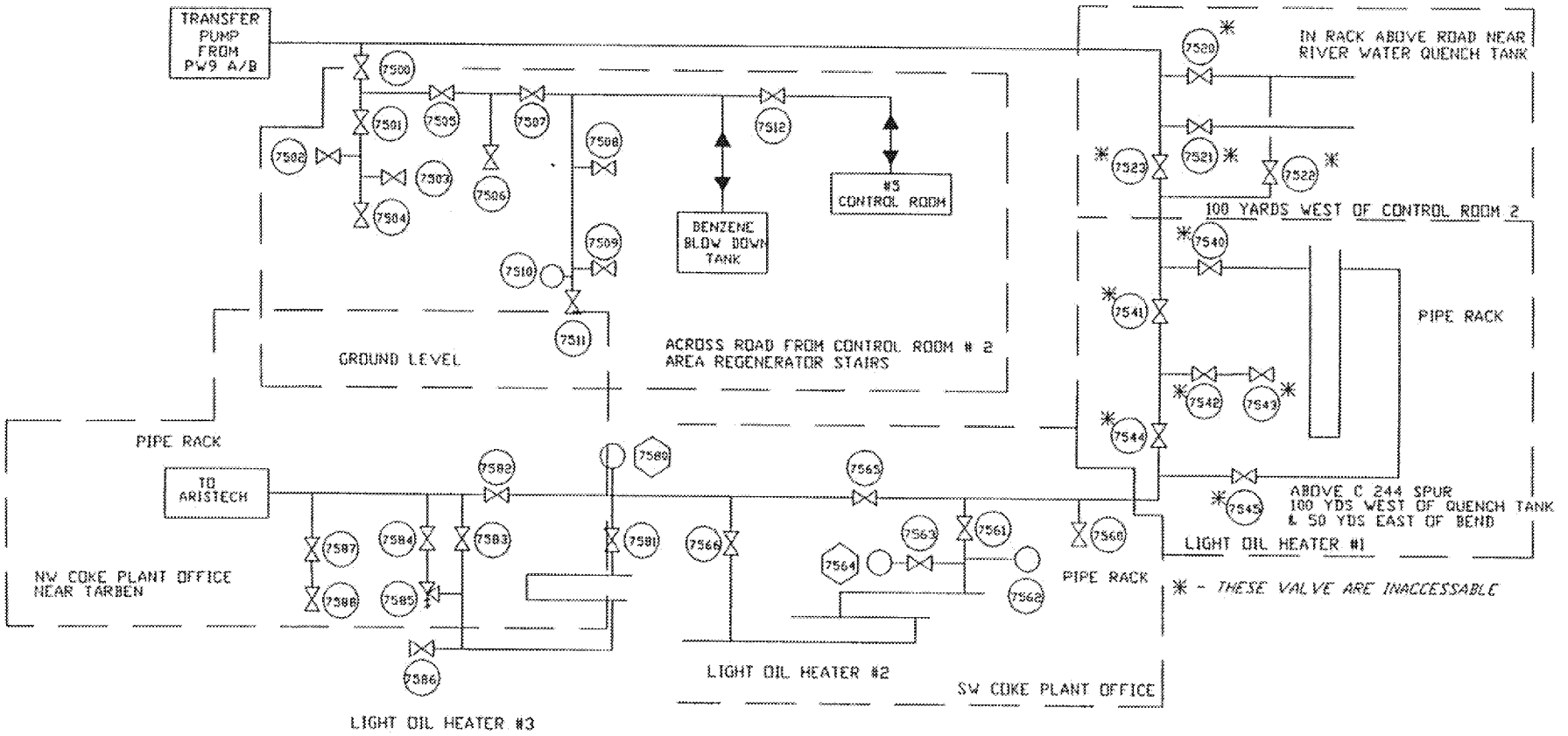

FIGURE 65

TRANSFER LINE
BY-PRODUCT CONTROL ROOM #2
USX CLAIRTON COKE WORKS

ADVANCED TECHNOLOGY SYSTEMS INC.

PREPARED BY	CHECKED BY
AMK	
DATE	PROJECT #
11/24/95	
DWG.	

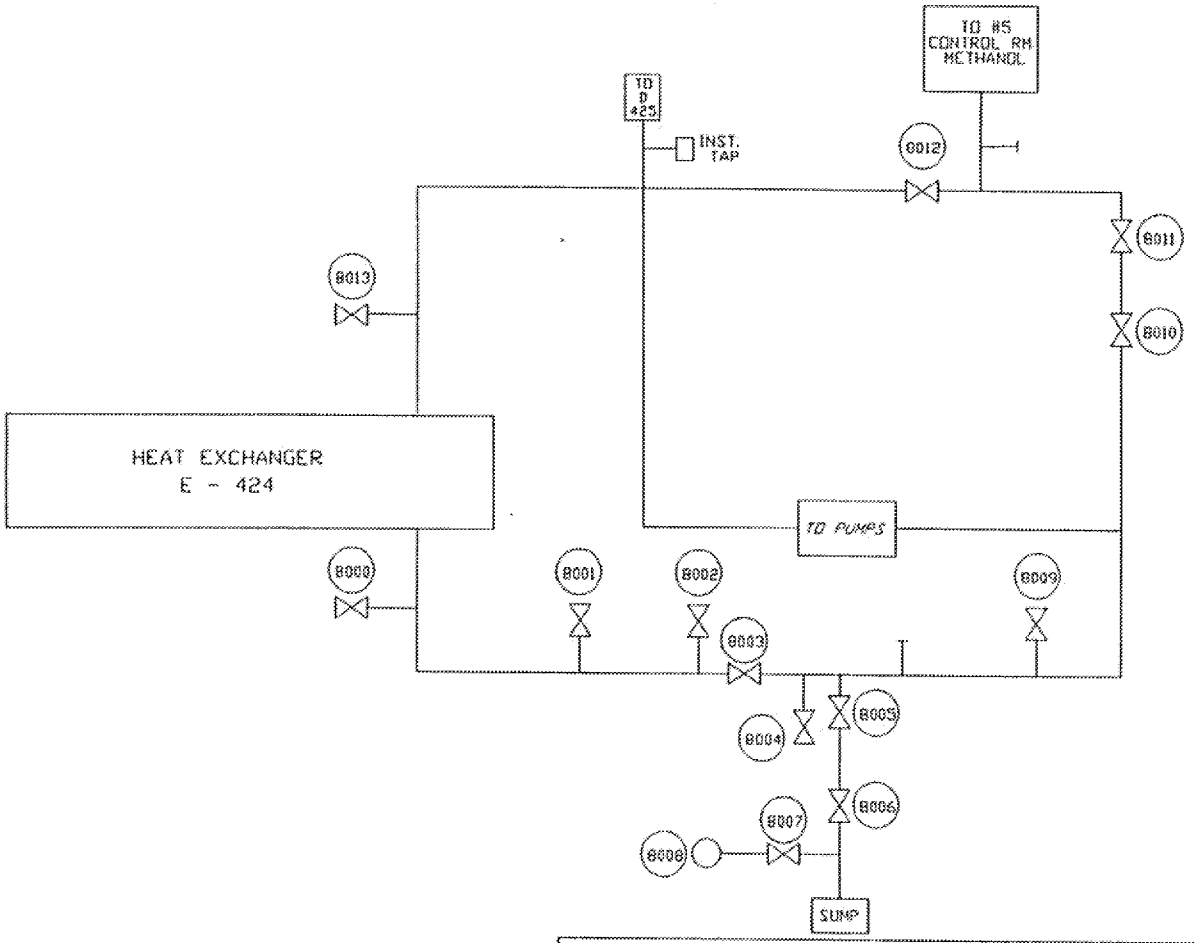

FIGURE 66

LIGHT OIL WASH HEAT EXCHANGER
BY-PRODUCT CONTROL ROOM #2
USX, CLAIRTON COKE WORKS

ADVANCED TECHNOLOGY SYSTEMS INC.

ATS

PREPARED BY	CHECKED BY
AMK	
DATE	PROJECT #
12/08/95	
DWG.	

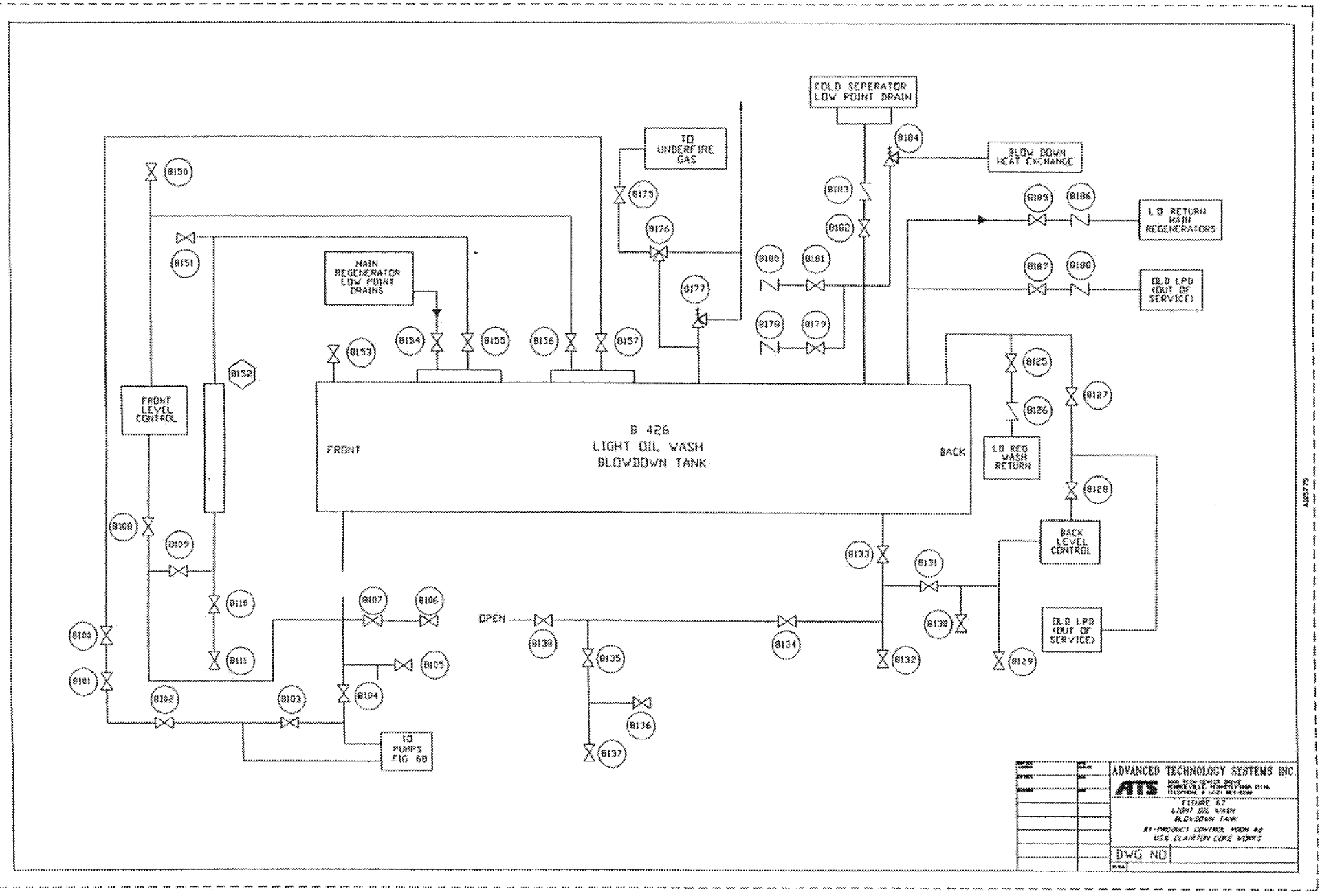
COLD SEPERATOR LOW POINT DRAIN
TO UNDERFIRE GAS
BLOW DOWN HEAT EXCHANGE
L.O. RETURN MAIN REGENERATORS
OLD LPD (OUT OF SERVICE)
MAIN REGENERATOR LOW POINT DRAINS
FRONT LEVEL CONTROL
B 426
LIGHT OIL WASH
BLOWDOWN TANK
FRONT
BACK
LO REG WASH RETURN
BACK LEVEL CONTROL
OLD LPD (OUT OF SERVICE)
OPEN
TO PUMPS FIG 68
ADVANCED TECHNOLOGY SYSTEMS INC.
ATS
FIGURE 67
LIGHT OIL WASH
BLOWDOWN TANK
BY-PRODUCT CONTROL ROOM #2
USS CLAIRTON COKE WORKS
DWG NO

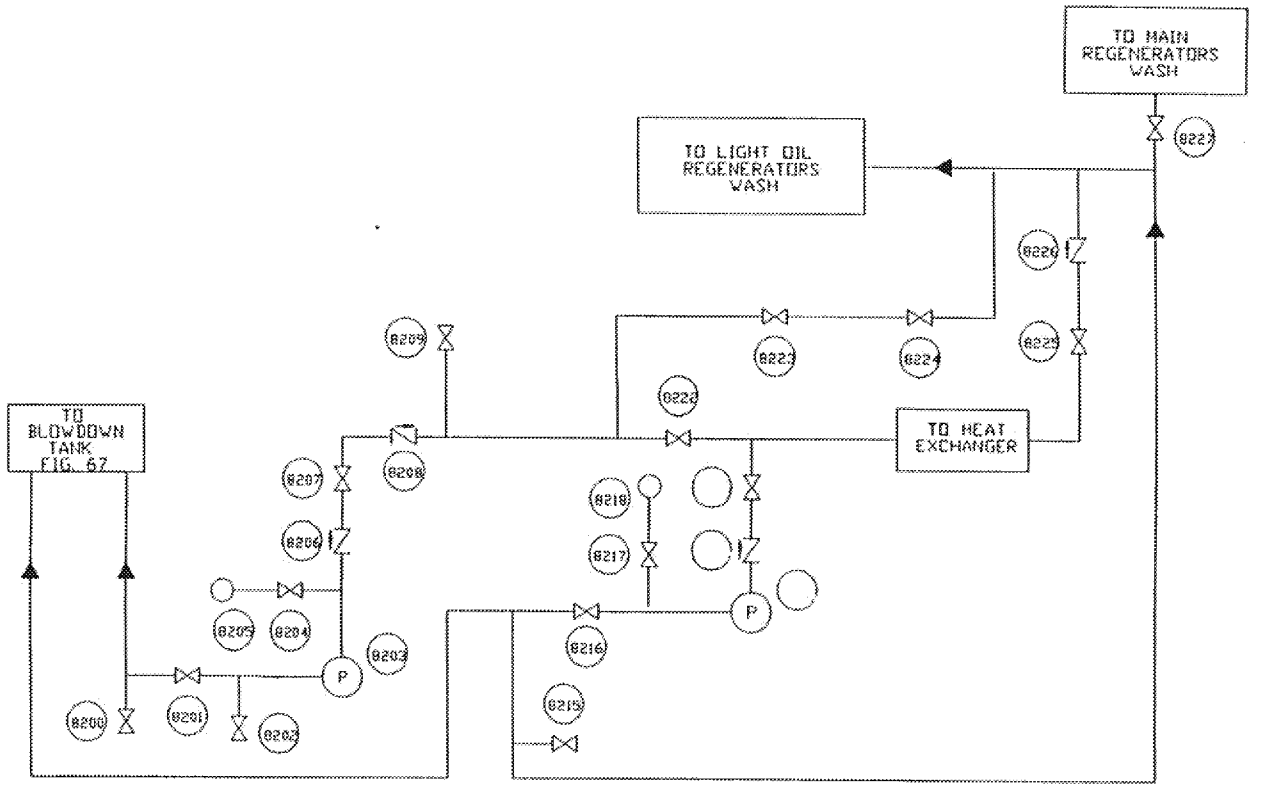

FIGURE 68

LIGHT OIL WASH
BLOWDOWN PUMPS
BY-PRODUCT CONTROL ROOM #2
USX, CLAIRTON COKE WORKS

ADVANCED TECHNOLOGY SYSTEMS INC.

ATS

PREPARED BY	CHECKED BY
AMK	
DATE	PROJECT #
12/05/95	
DWG.	

C68459

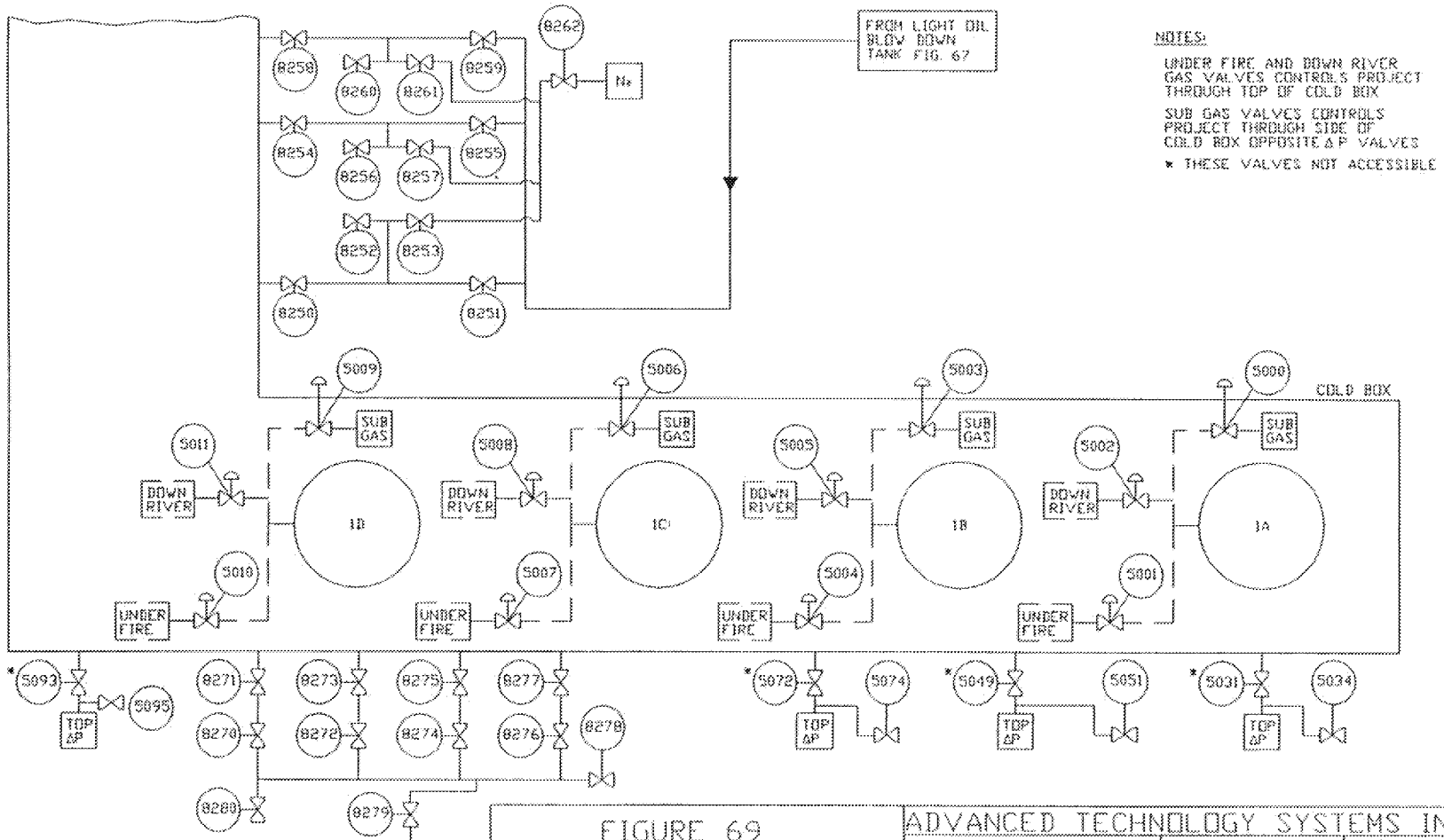

FIGURE 69

LIGHT OIL WASH NO.1 QUAD
ACETONE MANIFOLD LOW POINT DRAINS
BY-PRODUCT NO.2 CONTROL ROOM
USX CLAIRTON COKE WORKS

ADVANCED TECHNOLOGY SYSTEMS INC.

ATS

PREPARED BY	CHECKED BY
AMK	
DATE	PROJECT #
11/17/95	
DWG.	

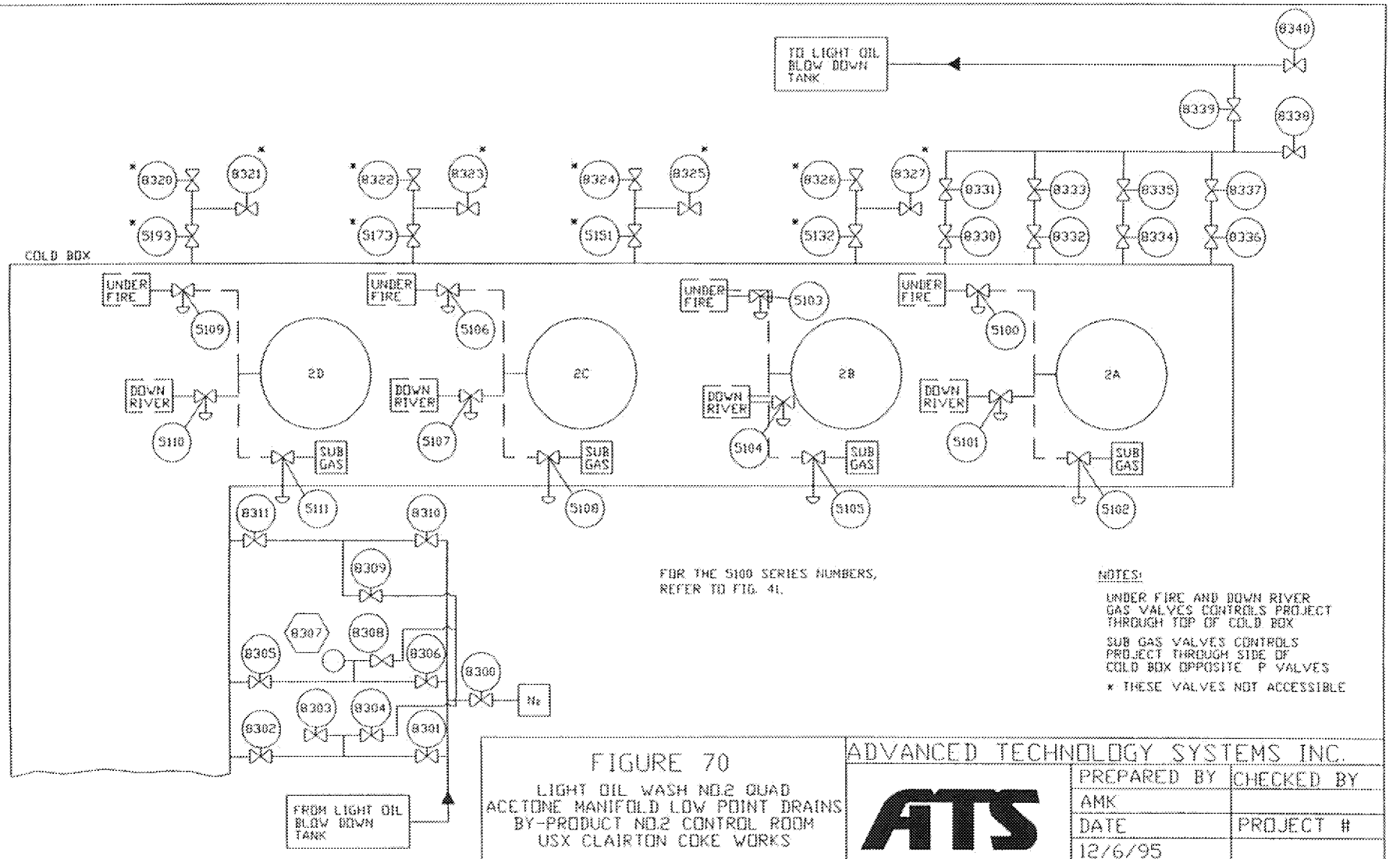

FOR THE 5100 SERIES NUMBERS, REFER TO FIG. 4L

NOTES:

UNDER FIRE AND DOWN RIVER GAS VALVES CONTROLS PROJECT THROUGH TOP OF COLD BOX

SUB GAS VALVES CONTROLS PROJECT THROUGH SIDE OF COLD BOX OPPOSITE P VALVES

* THESE VALVES NOT ACCESSIBLE

FIGURE 70

LIGHT OIL WASH NO.2 QUAD
ACETONE MANIFOLD LOW POINT DRAINS
BY-PRODUCT NO.2 CONTROL ROOM
USX CLAIRTON COKE WORKS

ADVANCED TECHNOLOGY SYSTEMS INC.

ATS

PREPARED BY	CHECKED BY
AMK	
DATE	PROJECT #
12/6/95	
DWG.	

ED_002508A_00000398-00008

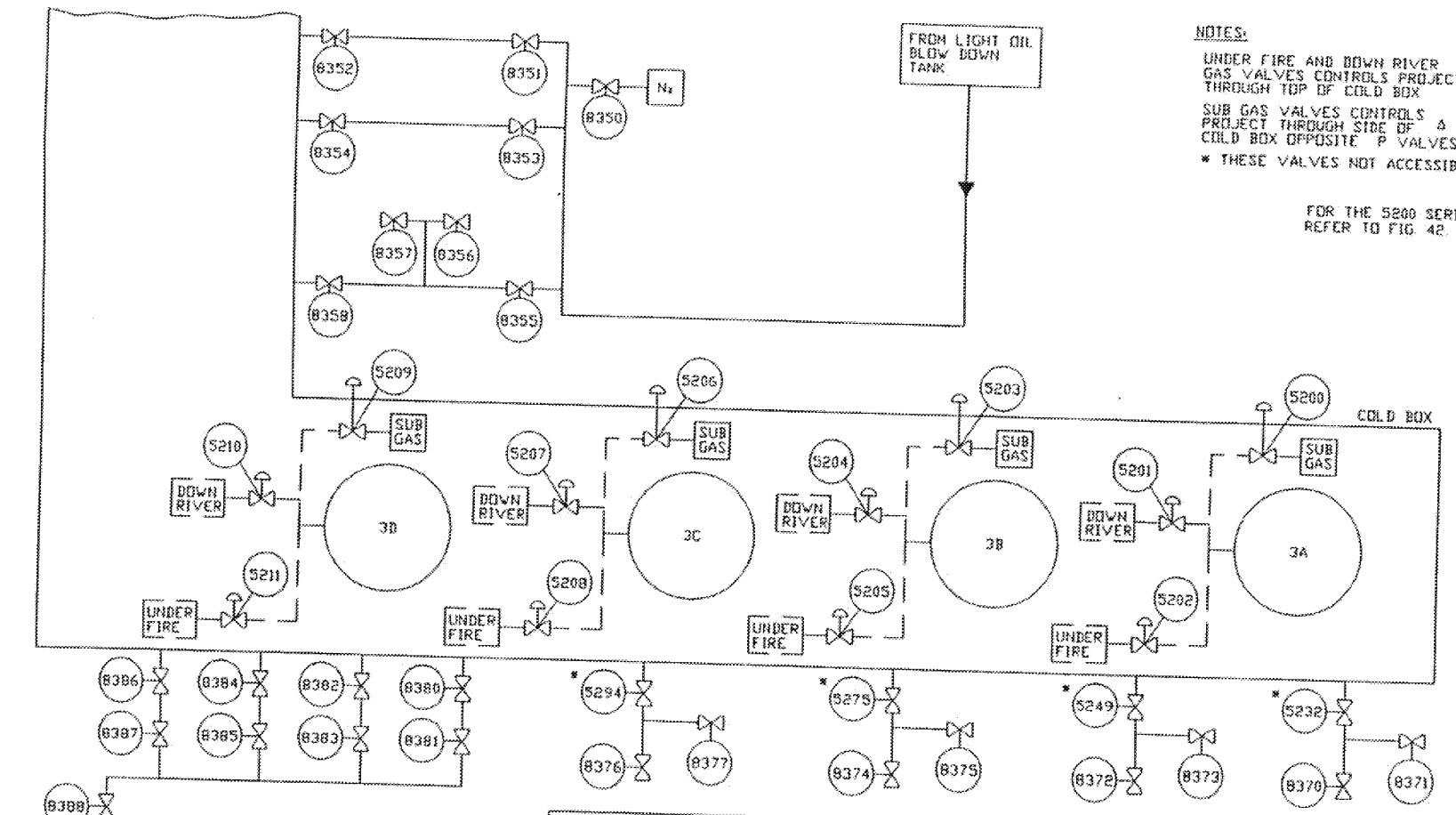

NOTES:

UNDER FIRE AND DOWN RIVER GAS VALVES CONTROLS PROJECT THROUGH TOP OF COLD BOX

SUB GAS VALVES CONTROLS PROJECT THROUGH SIDE OF COLD BOX OPPOSITE P VALVES

* THESE VALVES NOT ACCESSIBLE

FOR THE 5200 SERIES NUMBERS, REFER TO FIG. 42.

FIGURE 71

LIGHT OIL WASH NO.3 QUAD
ACETONE MANIFOLD LOW POINT DRAINS
BY-PRODUCT NO.2 CONTROL ROOM
USX CLAIRTON COKE WORKS

ADVANCED TECHNOLOGY SYSTEMS INC.

ATS

PREPARED BY	CHECKED BY
AMK	
DATE	PROJECT #
12/6/95	
DWG.	

ED_002508A_00000398-00009

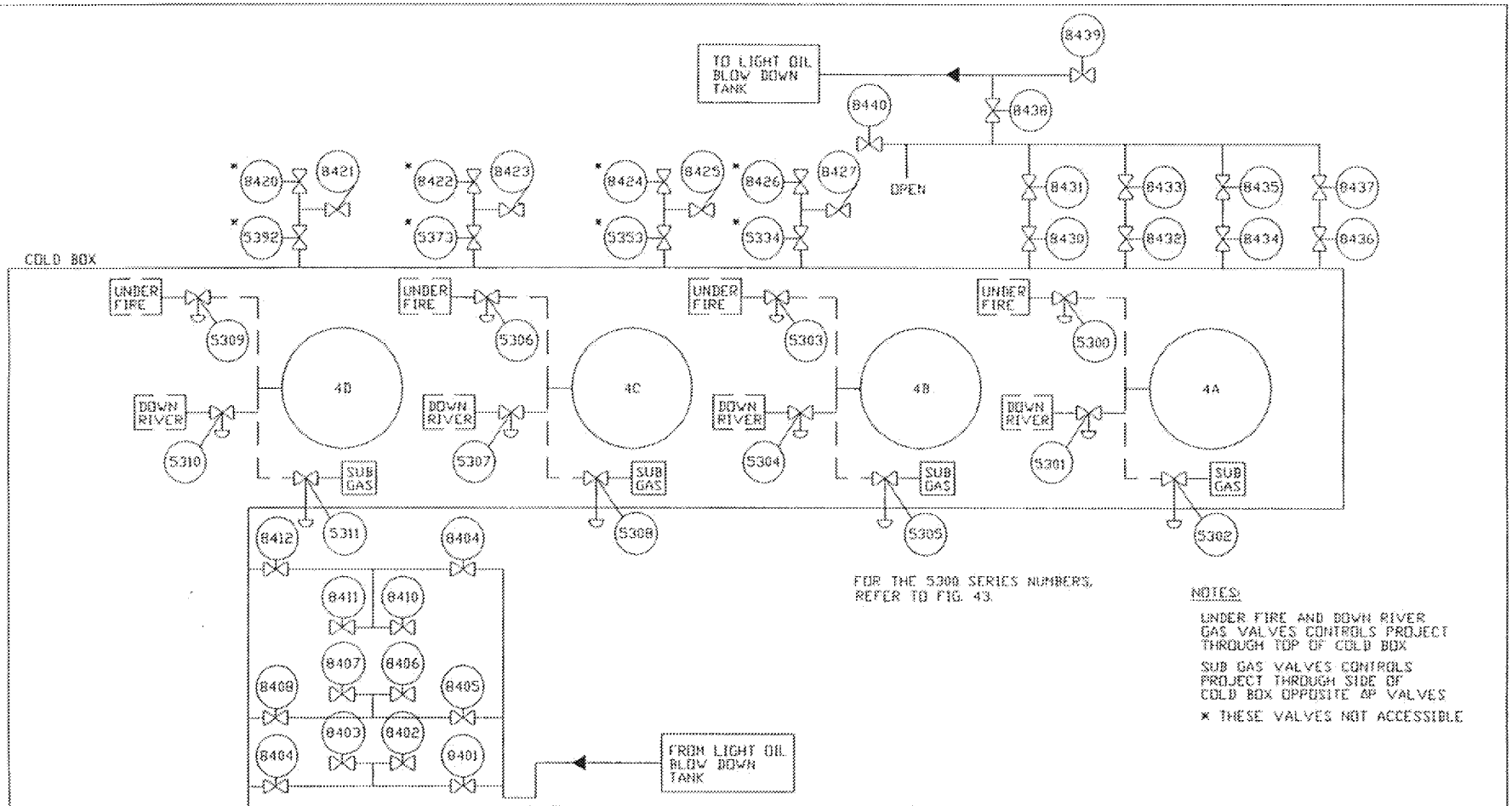

FOR THE 5300 SERIES NUMBERS, REFER TO FIG. 43.

NOTES:

UNDER FIRE AND DOWN RIVER GAS VALVES CONTROLS PROJECT THROUGH TOP OF COLD BOX

SUB GAS VALVES CONTROLS PROJECT THROUGH SIDE OF COLD BOX OPPOSITE 4P VALVES

* THESE VALVES NOT ACCESSIBLE

FIGURE 72

LIGHT OIL WASH NO.4 QUAD
ACETONE MANIFOLD LOW POINT DRAINS
BY-PRODUCT NO.2 CONTROL ROOM
USX CLAIRTON COKE WORKS

ADVANCED TECHNOLOGY SYSTEMS INC.

ATS

PREPARED BY	CHECKED BY
AMK	
DATE	PROJECT #
12/7/95	
DWG.	

NOTES:

UNDER FIRE AND DOWN RIVER GAS VALVES CONTROLS PROJECT THROUGH TOP OF COLD BOX

SUB GAS VALVES CONTROLS PROJECT THROUGH SIDE OF COLD BOX OPPOSITE ΔP VALVES

* THESE VALVES NOT ACCESSIBLE

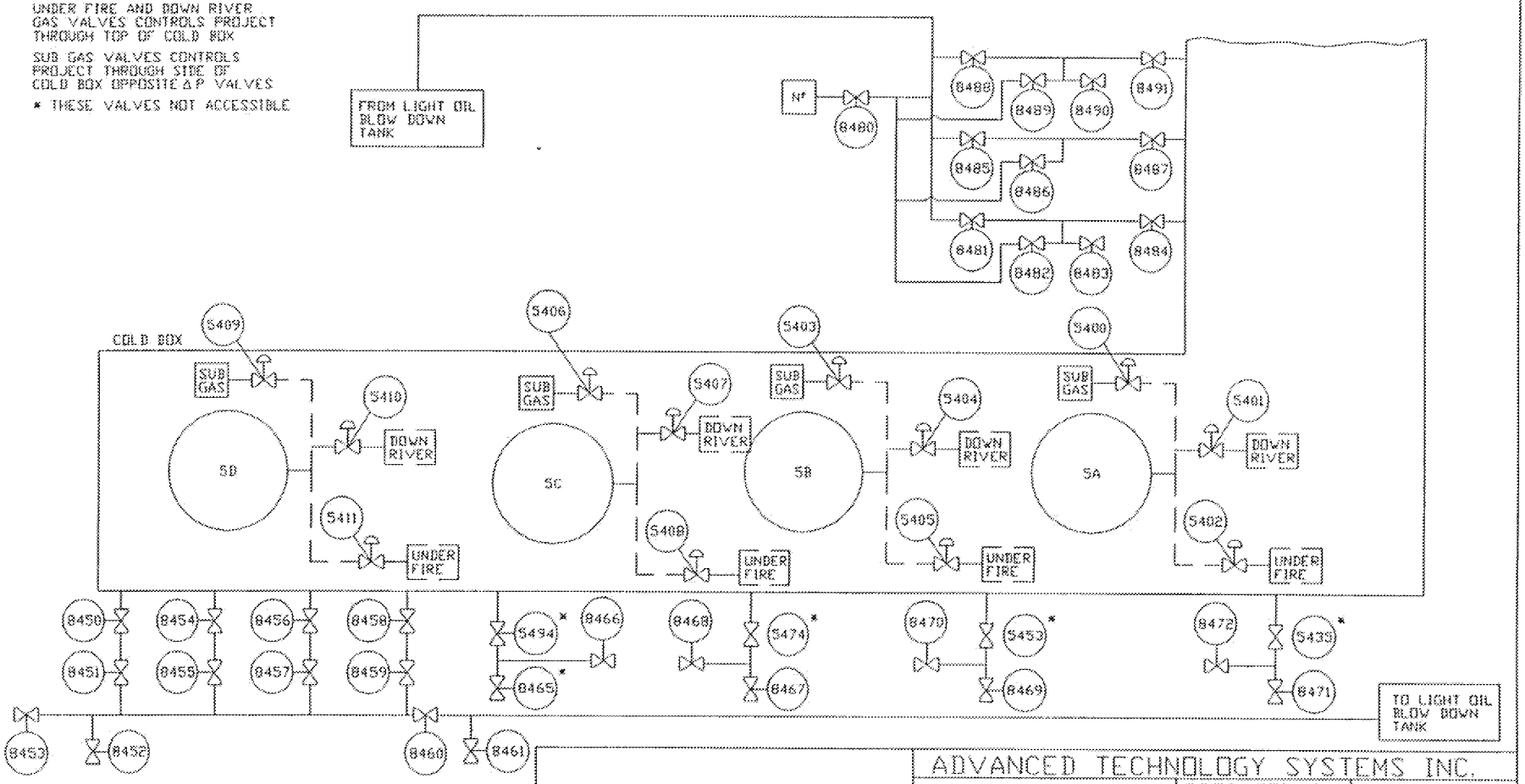

FIGURE 73

LIGHT OIL WASH NO.5 QUAD
BY-PRODUCT NO.2 CONTROL ROOM
USX CLAIRTON COKE WORKS

ADVANCED TECHNOLOGY SYSTEMS INC.

ATS

PREPARED BY	CHECKED BY
AMK	
DATE	PROJECT #
12/07/95	
DWG.	

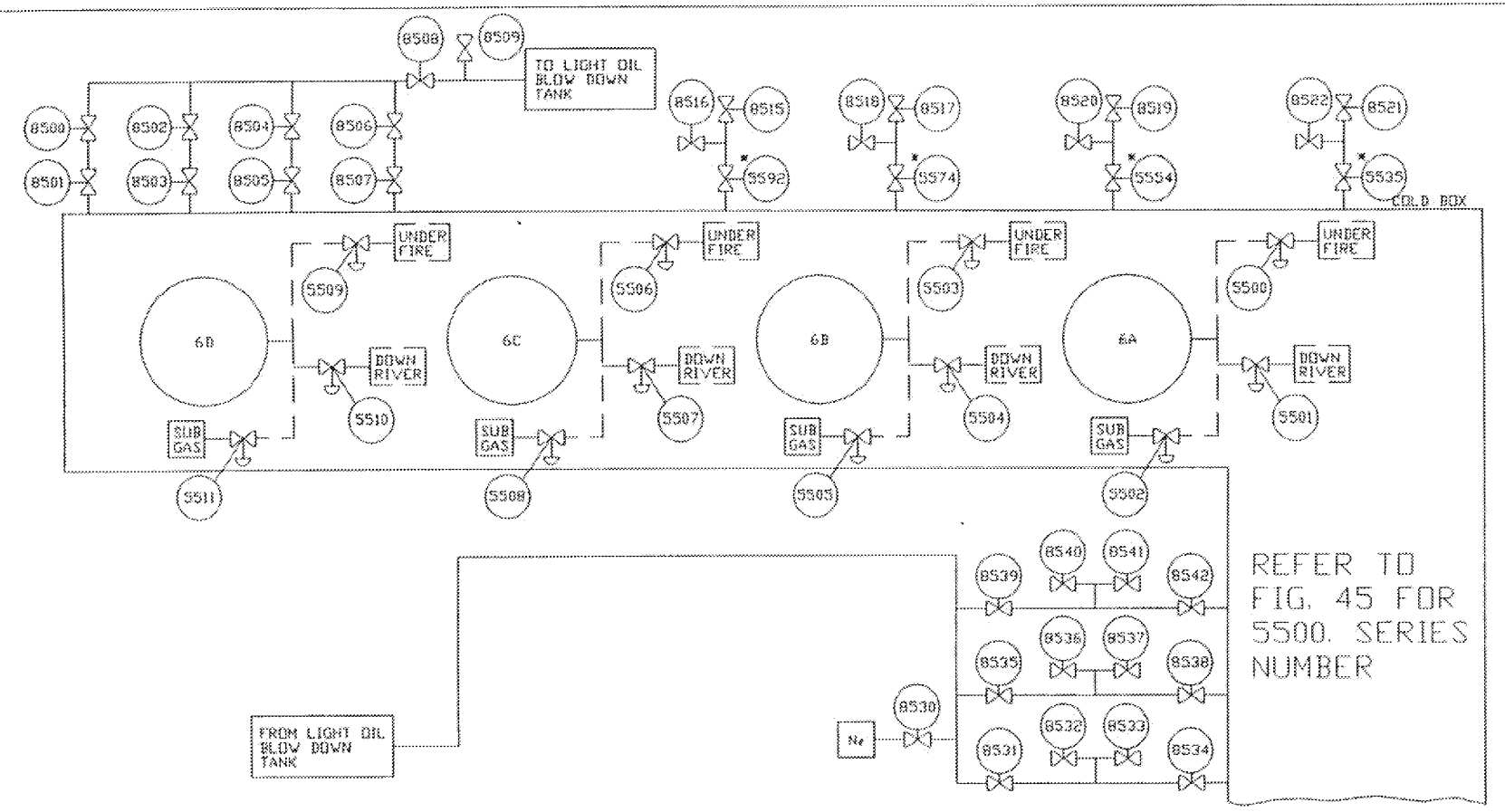

NOTES:

UNDER FIRE AND DOWN RIVER GAS VALVES CONTROLS PROJECT THROUGH TOP OF COLD BOX

SUB GAS VALVES CONTROLS PROJECT THROUGH SIDE OF COLD BOX OPPOSITE A P VALVES

* THESE VALVES NOT ACCESSIBLE

FIGURE 74

LIGHT OIL WASH NO.6 QUAD
ACETONE MANIFOLD LOW POINT DRAINS
BY-PRODUCT NO.2 CONTROL ROOM
USX CLAIRTON COKE WORKS

ADVANCED TECHNOLOGY SYSTEMS INC.

ATS

PREPARED BY	CHECKED BY
AMK	
DATE	PROJECT #
11/24/95	
DWG.	

ED_002508A_00000398-00012

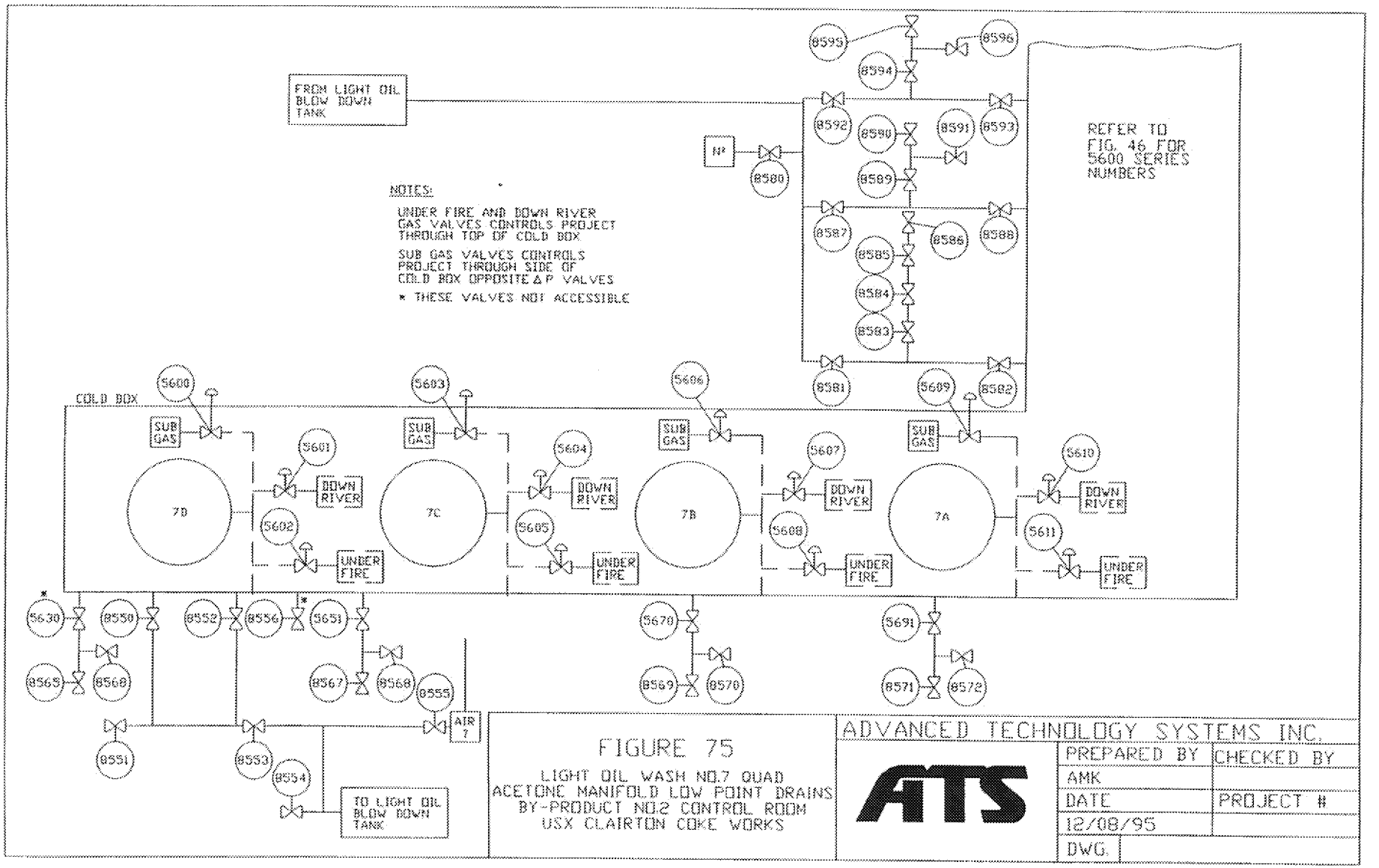

FIGURE 75

LIGHT OIL WASH NO.7 QUAD
ACETONE MANIFOLD LOW POINT DRAINS
BY-PRODUCT NO.2 CONTROL ROOM
USX CLAIRTON COKE WORKS

ADVANCED TECHNOLOGY SYSTEMS INC.

ATS

PREPARED BY	CHECKED BY
AMK	
DATE	PROJECT #
12/08/95	
DWG.	

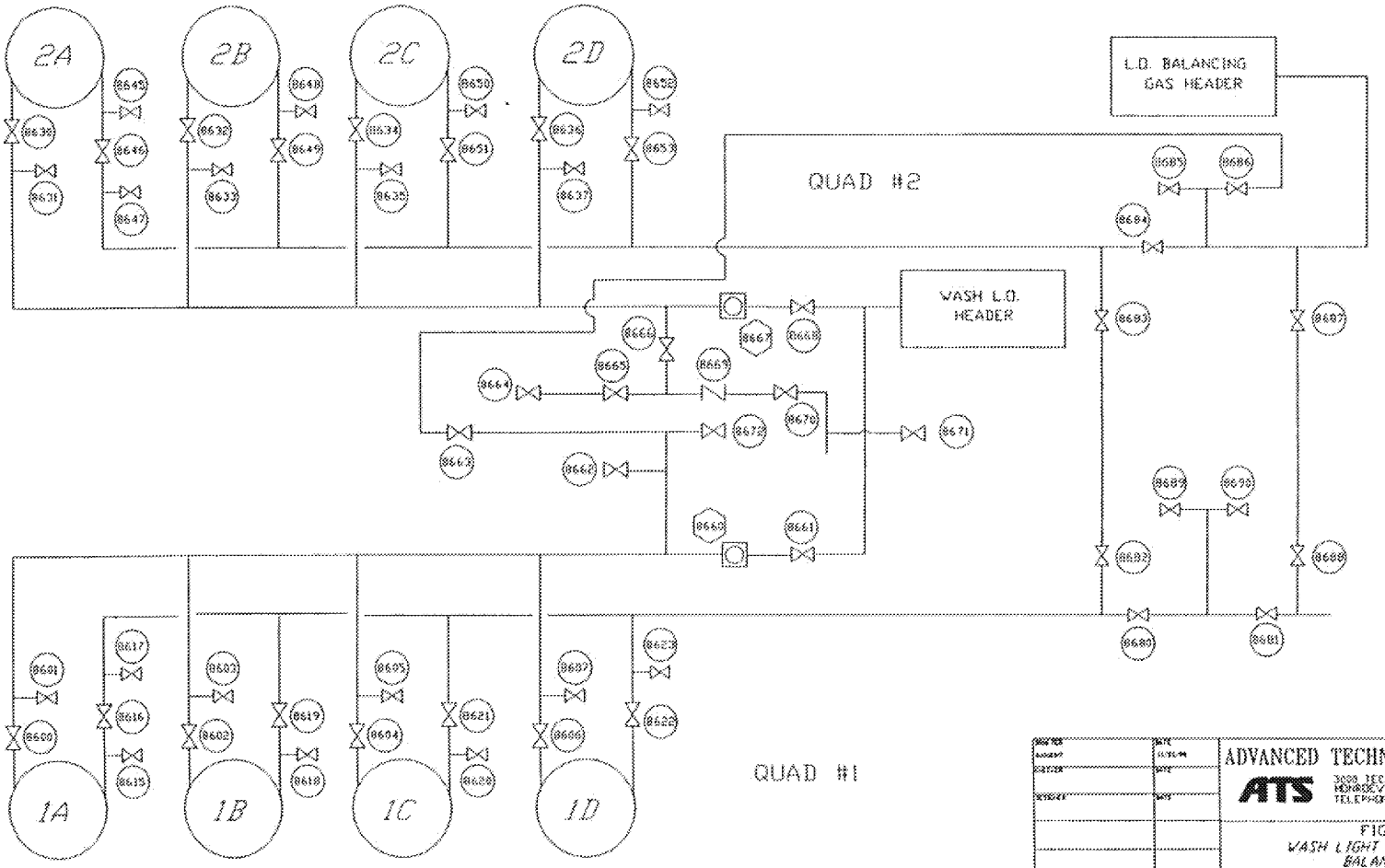

ADVANCED TECHNOLOGY SYSTEMS INC.
ATS
3000 TECH CENTER DRIVE
MONROEVILLE PENNSYLVANIA 15146
TELEPHONE # (412) 829-2208

FIGURE 76
WASH LIGHT OIL/LIGHT OIL
BALANCING GAS
BY-PRODUCT CONTROL ROOM #2
USX CLAIRTON COKE WORKS

DWG NO

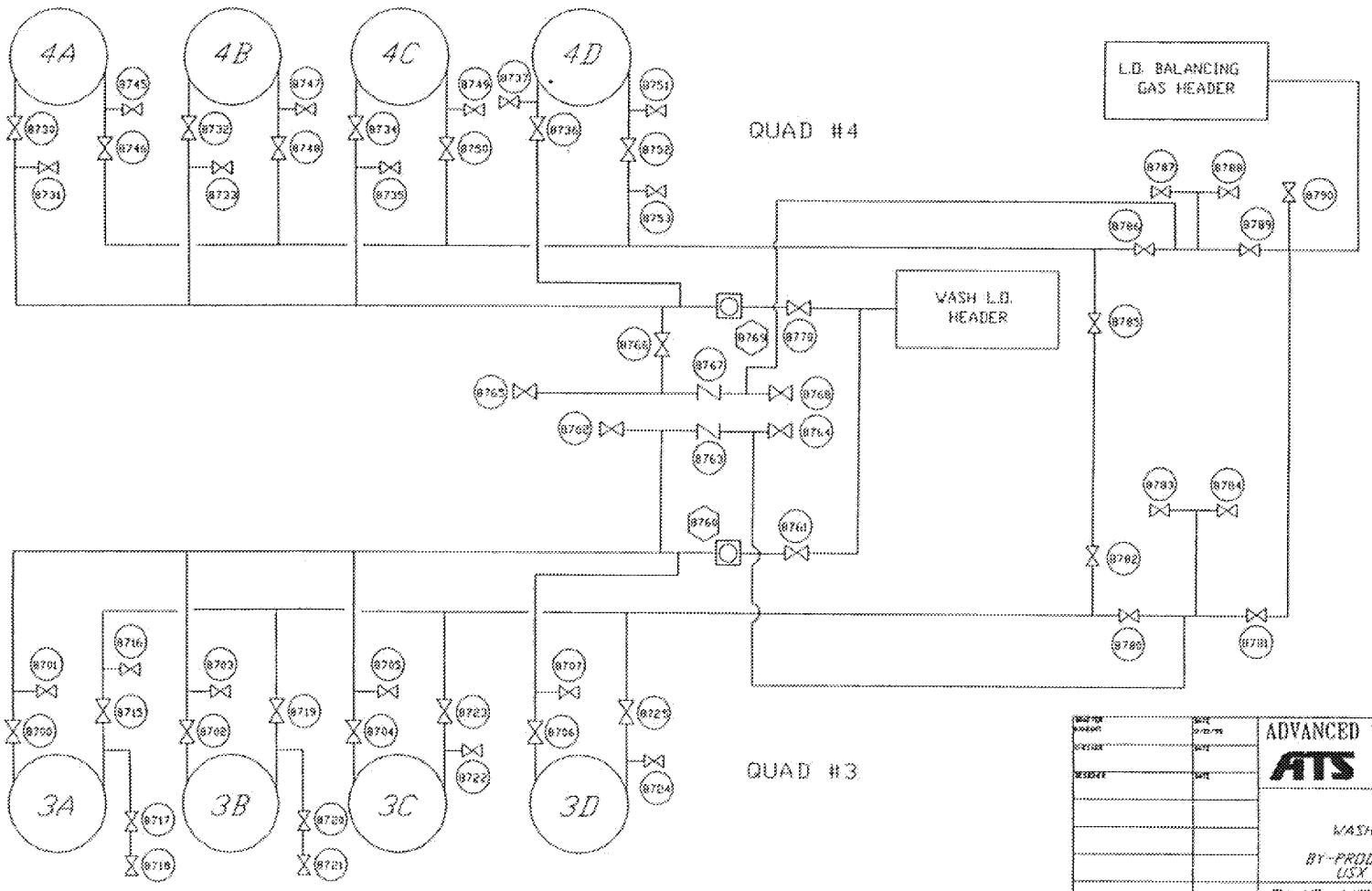

ADVANCED TECHNOLOGY SYSTEMS INC.

ATS

3000 TECH CENTER DRIVE
MONROEVILLE, PENNSYLVANIA 15146
TELEPHONE # (412) 829-2268

FIGURE 77
QUAD #3 & #4
WASH LIGHT OIL/LIGHT OIL
BALANCING GAS
BY-PRODUCT CONTROL ROOM #2
USX CLAIRTON COKE WORKS

DWG NO

SCALE

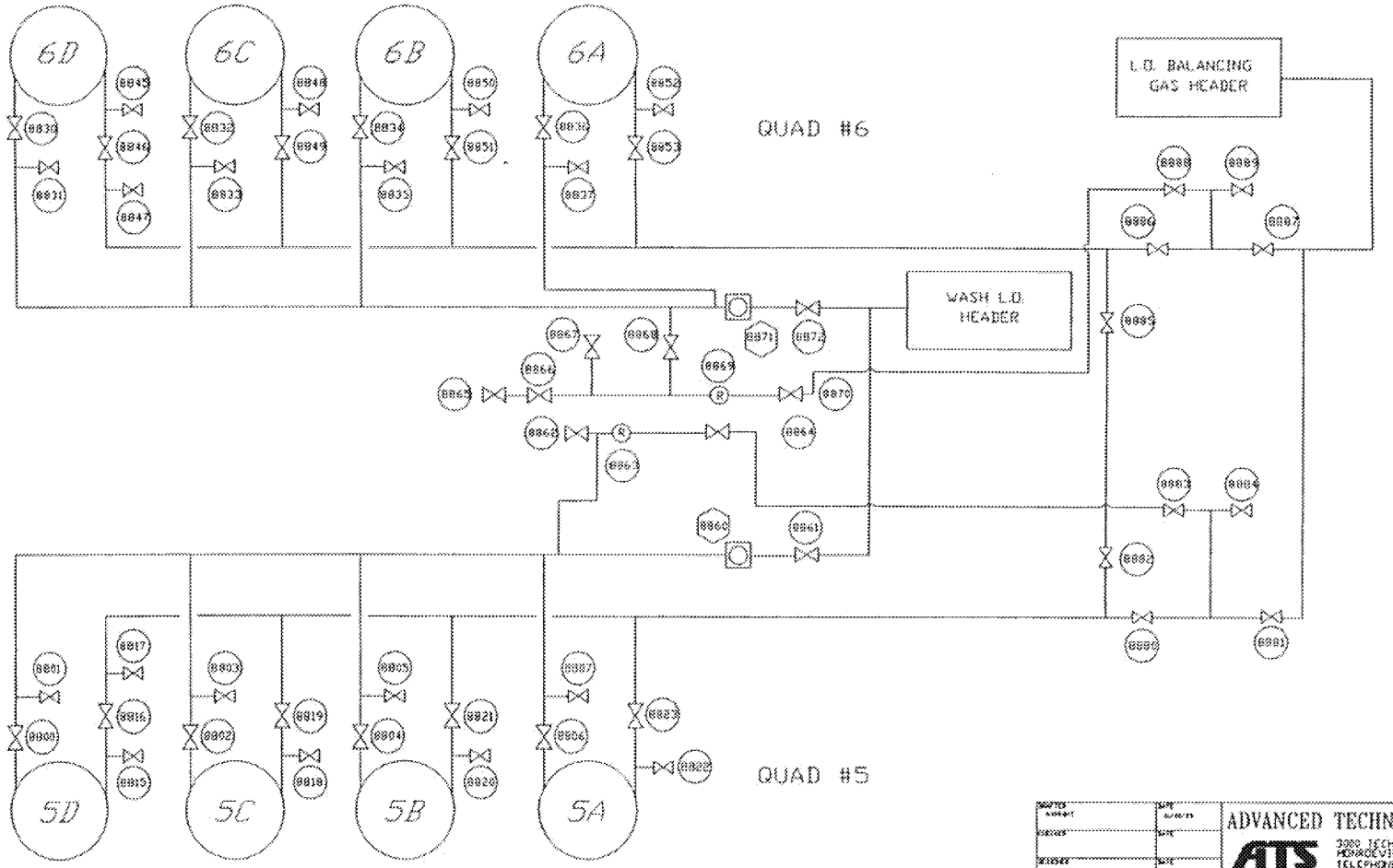

ADVANCED TECHNOLOGY SYSTEMS INC.

ATS

3000 TECH CENTER DRIVE
MONROEVILLE, PENNSYLVANIA 15146
TELEPHONE # (412) 829-2000

FIGURE 7B
QUAD #5 & #6
WASH LIGHT OIL/LIGHT OIL
BALANCING GAS
BY-PRODUCT CONTROL ROOM #2
USX CLAIRTON COKE WORKS

DWG NO

ED_002508A_00000398-00016

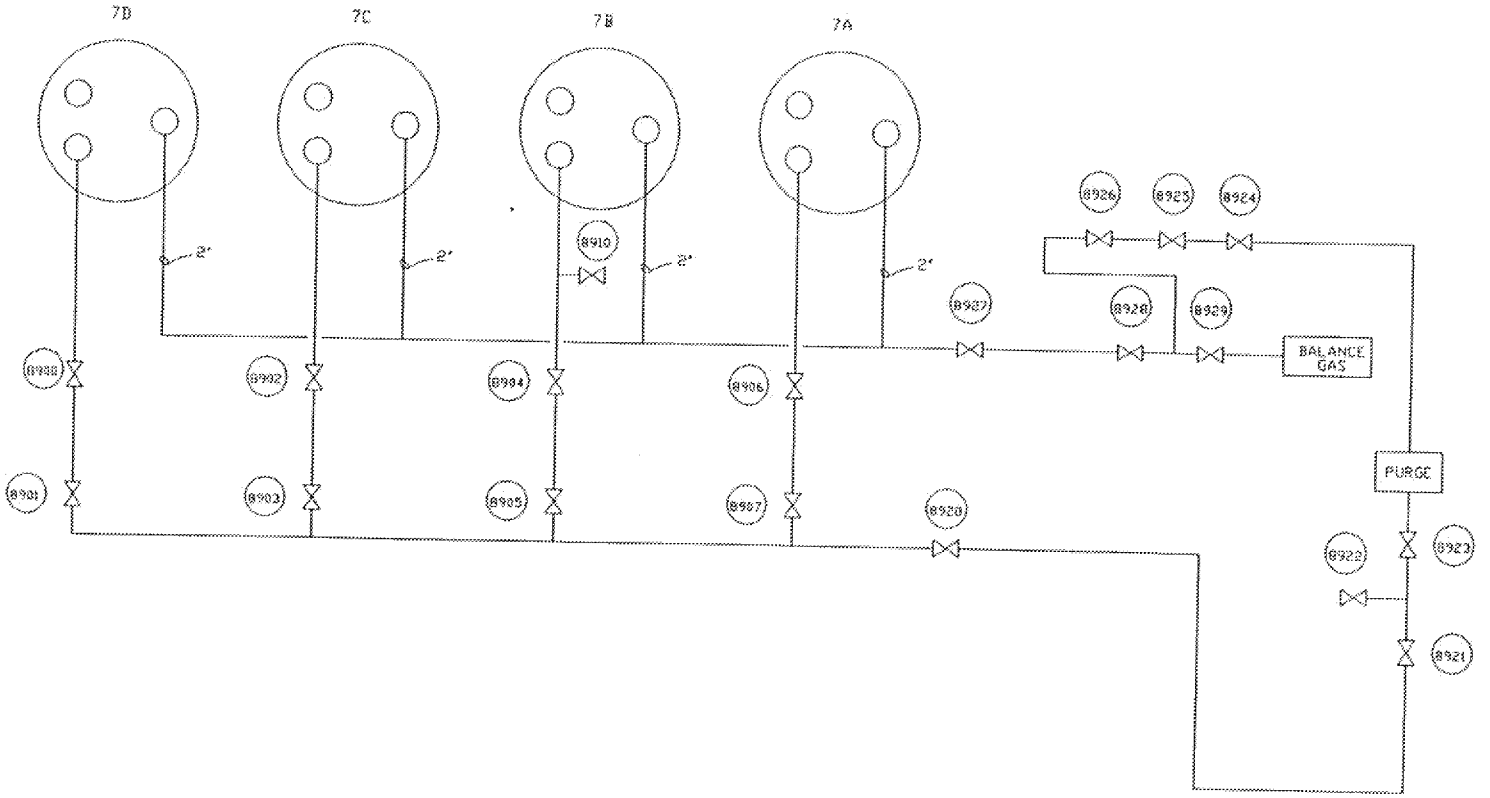

ADVANCED TECHNOLOGY SYSTEMS INC.

ATS

3996 TECH CENTER DRIVE
MONROEVILLE, PENNSYLVANIA 15146
TELEPHONE # (412) 829-2229

FIGURE 79
BY-PRODUCT CONTROL ROOM #2
QUAD 7
BALANCING GAS/BENZENE OVERFLOW
USX CLAIRTON COKE WORKS

DWG NO

ED_002508A_00000398-00017

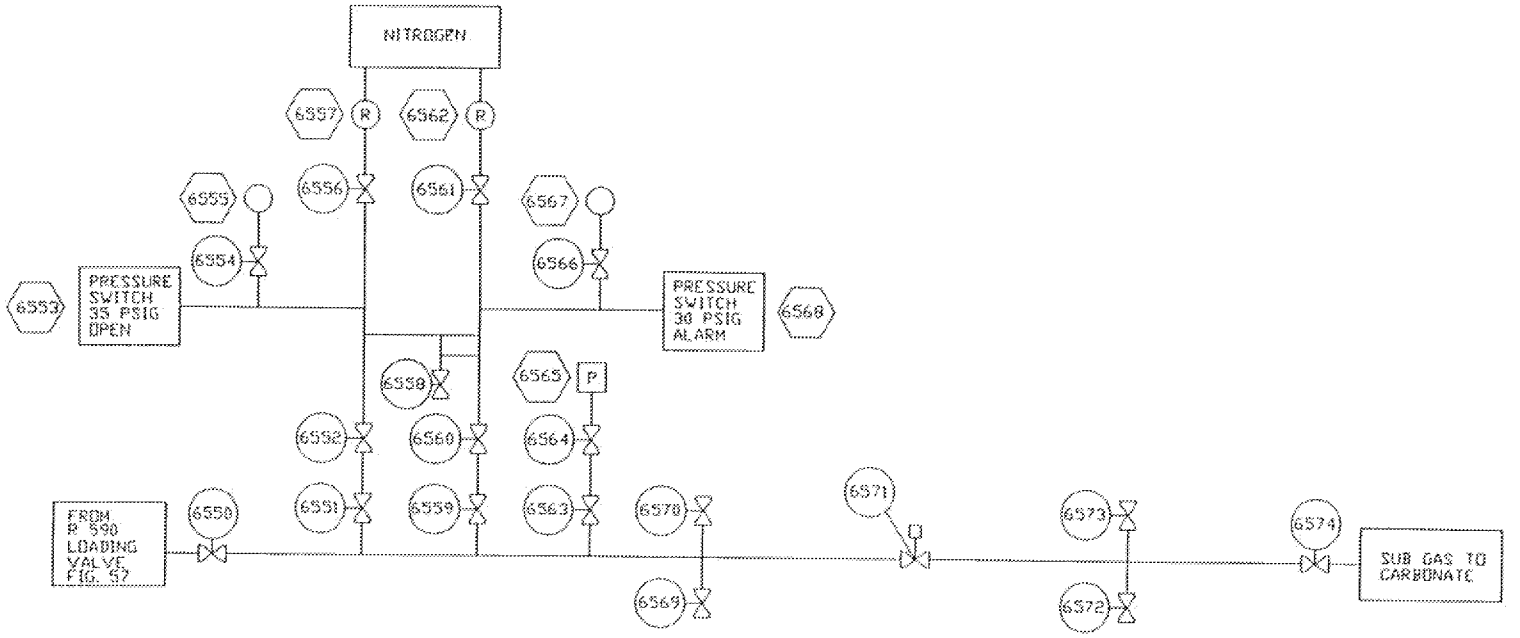

FIGURE 80

SUB GAS BYPASS
TO CARBONATE
USX CLAIRTON COKE WORKS

ADVANCED TECHNOLOGY SYSTEMS INC.

ATS

PREPARED BY	CHECKED BY
AMK	
DATE	PROJECT #
11/20/95	
DWG.	

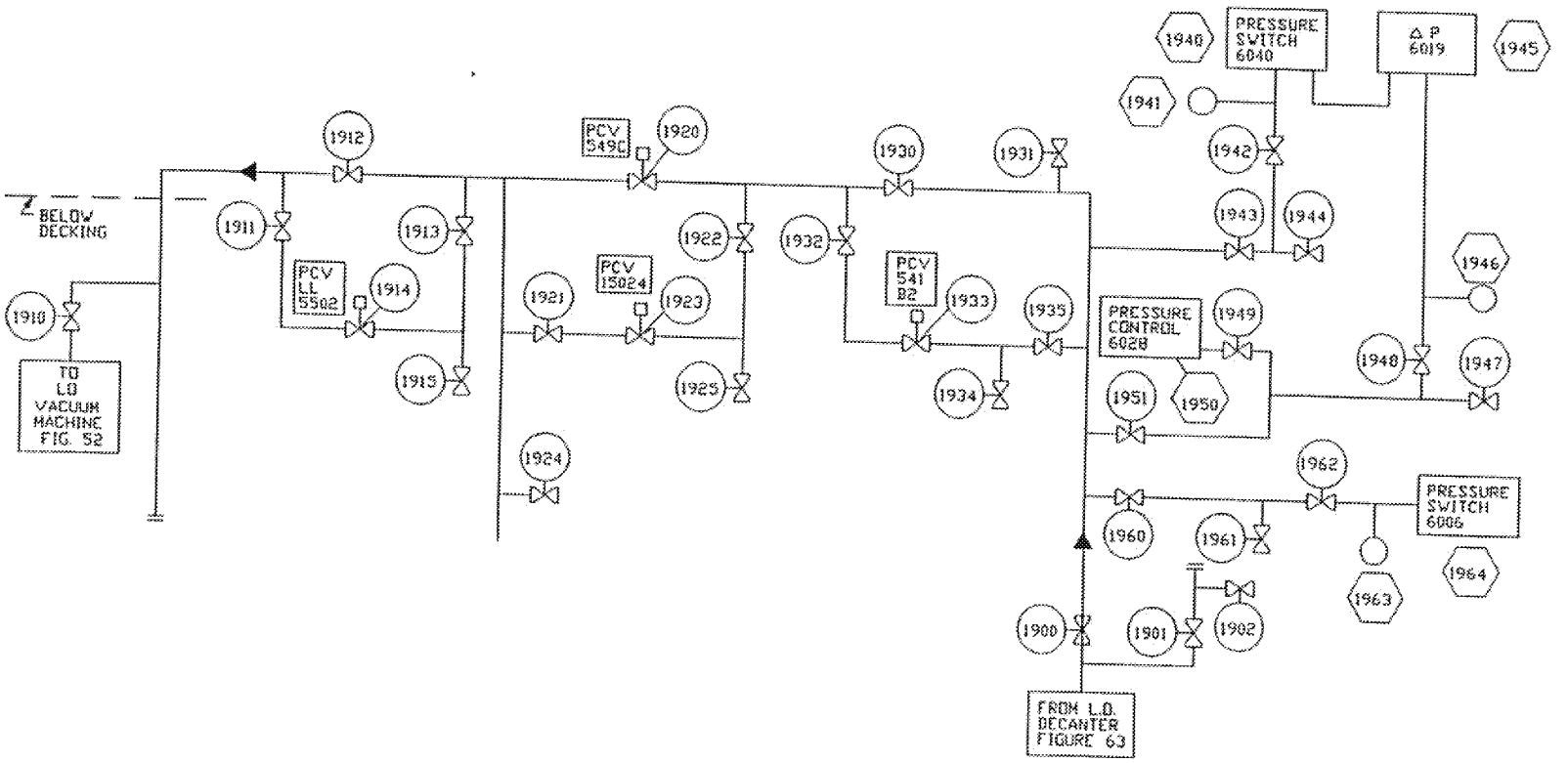

FIGURE 81

LIGHT OIL DECANTERS VENT
USX CLAIRTON COKE WORKS

ADVANCED TECHNOLOGY SYSTEMS INC.

ATS

PREPARED BY	CHECKED BY
AMK	
DATE	PROJECT #
12/08/95	
DWG.	