5168	D	045	2	41	MAIN QUAD	R-402-C	V	UNDER FIRE GAS VALVE	TOP #C	SG	16.00	G	Y	M	
5169	D48		2	41	MAIN QUAD	R-402-C		SUB GAS VALVE	TOP #C	SG	16.00	G	Y	M	ADDED 12-95
5170	D	571	2	41	MAIN QUAD	R-402-C	V	TOP LEVEL NORTH PRESSURE TAP	TOP #C	LO	57.63	L	N	A	NEW 4-93 TOP LEVEL
5171	D	407	2	41	MAIN QUAD	R-402C	VT	RELIEF VALVE	TOP #C	SG	16.00	G	Y	M	
5172	D	022	2	41	MAIN QUAD	R-402C	V	MID LEVEL PRESSURE TAP VALVE	TOP #C	SG	16.00	G	Y	M	
5173	D	555	2	41	MAIN QUAD	R-402-C	V	LOW LEVEL PRESSURE TAP COLD	TOP #C	LO	57.63	L	N	A	LO WASH
5180	D	034	2	41	MAIN QUAD	R-402D	V	RAW GAS VALVE	TOP #D	SG	16.00	G	Y	M	
5181	D	035	2	41	MAIN QUAD	R-402D	V	TOP PRESSURE TAP VALVE	TOP #D	SG	16.00	G	Y	M	
5182	A	191	2	41	MAIN QUAD	R-402D	V	TOP PRESSURE TAP	TOP #D	SG	16.00	G	Y	M	
5183	A	192	2	41	MAIN QUAD	R-402D	V	TOP PRESSURE TAP	TOP #D	SG	16.00	G	Y	M	
5184	A	193	2	41	MAIN QUAD	R-402D	V	TOP PRESSURE TAP	TOP #D	SG	16.00	G	Y	M	
5185	D	036	2	41	MAIN QUAD	R-402D	V	DOWN RIVER GAS VALVE	TOP #D	SG	16.00	G	Y	M	
5186	D	572	2	41	MAIN QUAD	R-402-D	V	TOP SOUTH STEAM TAP	TOP #D	LO	57.63	L	Y	M	NEW 4-93 TOP LEVEL
5188	D	039	2	41	MAIN QUAD	R-402D	V	UNDER FIRE GAS VALVE	TOP #D	SG	16.00	G	Y	M	
5189	D	044	2	41	MAIN QUAD	R-402D	V	SUB GAS VALVE	TOP #D	SG	16.00	G	Y	M	
5190	D	576	2	41	MAIN QUAD	R-402-D	V	TOP LEVEL NORTH PRESSURE TAP	TOP #D	LO	57.63	L	N	A	NEW 4-93 TOP LEVEL
5191	D	406	2	41	MAIN QUAD	R-402D	VT	RELIEF VALVE	TOP #D	SG	16.00	G	Y	M	
5192	D	021	2	41	MAIN QUAD	R-402D	V	MID LEVEL PRESSURE TAP VALVE	TOP #D	SG	16.00	G	Y	M	
5193	D	556	2	41	MAIN QUAD	R-402-D	V	LOW LEVEL PRESSURE TAP COLD	TOP #D	LO	57.63	L	N	A	LO WASH

ED_002508A_00000396-00001

TABLE 42
REGISTRATION OF COMPONENTS IN BENZENE SERVICE
MAIN QUAD NO. 3

5200	D	581	2	42	MAIN QUAD	R-403-A	V	SUB GAS COLD SEPARATOR BLOCKING VALVE	BOTTOM	LO	57.63	L	Y	MIU	LO WASH
5201	D	582	2	42	MAIN QUAD	R-403-A	V	DOWNRIVER GAS COLD SEPARATOR BLOCK VALVE	BOTTOM	LO	57.63	L	Y	MIU	LO WASH
5202	D	583	2	42	MAIN QUAD	R-403-A	V	UNDERFIRE GAS COLD SEPARATOR BLOCK VALVE	BOTTOM	LO	57.63	L	Y	MIU	LO WASH
5203	D	584	2	42	MAIN QUAD	R-403-B	V	SUB GAS COLD SEPARATOR BLOCKING VALVE	BOTTOM	LO	57.63	L	Y	MIU	LO WASH
5204	D	585	2	42	MAIN QUAD	R-403-B	V	DOWNRIVER GAS COLD SEPARATOR BLOCK VALVE	BOTTOM	LO	57.63	L	Y	MIU	LO WASH
5205	D	586	2	42	MAIN QUAD	R-403-B	V	UNDERFIRE GAS COLD SEPARATOR BLOCK VALVE	BOTTOM	LO	57.63	L	Y	MIU	LO WASH
5206	D	587	2	42	MAIN QUAD	R-403-C	V	SUB GAS COLD SEPARATOR BLOCKING VALVE	BOTTOM	LO	57.63	L	Y	MIU	LO WASH
5207	D	588	2	42	MAIN QUAD	R-403-C	V	DOWNRIVER GAS COLD SEPARATOR BLOCK VALVE	BOTTOM	LO	57.63	L	Y	MIU	LO WASH
5208	D	589	2	42	MAIN QUAD	R-403-C	V	UNDERFIRE GAS COLD SEPARATOR BLOCK VALVE	BOTTOM	LO	57.63	L	Y	MIU	LO WASH
5209	D	590	2	42	MAIN QUAD	R-403-D	V	SUB GAS COLD SEPARATOR BLOCKING VALVE	BOTTOM	LO	57.63	L	Y	MIU	LO WASH
5210	D	591	2	42	MAIN QUAD	R-403-D	V	DOWNRIVER GAS COLD SEPARATOR BLOCK VALVE	BOTTOM	LO	57.63	L	Y	MIU	LO WASH
5211	D	592	2	42	MAIN QUAD	R-403-D	V	UNDERFIRE GAS COLD SEPARATOR BLOCK VALVE	BOTTOM	LO	57.63	L	Y	MIU	LO WASH
5215	C	495	2	42	MAIN QUAD	QUAD 3	V	SUB GAS HEADER CLEANOUT VALVE	HEADER	SG	16.00	GV	N	A	
5216	C	476	2	42	MAIN QUAD	QUAD 3	V	BLOCKING VALVE NITROGEN PURGE	HEADER	SG	16.00	GV	Y	N/A	
5217	C	478	2	42	MAIN QUAD	QUAD 3	V	CLEAN OUT VALVE SUB GAS VACUUM LINE	HEADER	SG	16.00	GV	Y	N/A	
5218	C	477	2	42	MAIN QUAD	QUAD 3	V	BLOCKING VALVE SUB GAS VACUUM LINE	HEADER	SG	16.00	GV	Y	N/A	
5219	C	479	2	42	MAIN QUAD	QUAD 3	V	BLEED VALVE SUB GAS VACUUM LINE	HEADER	SG	16.00	GV	Y	N/A	
5220	D	154	2	42	MAIN QUAD	R-403A	V	RAW GAS VALVE	TOP #A	SG	16.00	G	Y	M	
5221	D	161	2	42	MAIN QUAD	R-403A	V	DOWN RIVER GAS VALVE	TOP #A	SG	16.00	G	Y	M	
5222	D	601	2	42	MAIN QUAD	R-403-A	V	TOP LEVEL NORTH PRESSURE TAP	TOP #A	LO	57.63	L	Y	M	NEW 4-93 TOP LEVEL
5223			2	42	MAIN QUAD	R-403-A	V	TOP LEVEL NORTH PRESSURE TAP EXTENDED	TOP #A	LO	57.63	L	Y	M	ADDED 12-95
5224	D	123	2	42	MAIN QUAD	R-403A	V	UNDER FIRE GAS VALVE	TOP #A	SG	16.00	G	Y	M	
5225	D	124	2	42	MAIN QUAD	R-403A	V	TOP PRESSURE TAP VALVE	TOP #A	SG	16.00	G	Y	M	
5226	A	195	2	42	MAIN QUAD	R-403A	V	TOP PRESSURE TAP	TOP #A	SG	16.00	G	Y	M	
5227	A	194	2	42	MAIN QUAD	R-403A	V	TOP PRESSURE TAP	TOP #A	SG	16.00	G	Y	M	
5228	D	125	2	42	MAIN QUAD	R-403A	V	SUB GAS VALVE	TOP #A	SG	16.00	G	Y	M	
5229	D	597	2	42	MAIN QUAD	R-403-A	V	TOP LEVEL SOUTH STEAM TAP	TOP #A	LO	57.63	L	N	A	NEW 4-93 TOP LEVEL
5230	D	418	2	42	MAIN QUAD	R-403A	VT	RELIEF VALVE	TOP #A	SG	16.00	G	Y	M	
5231	C	496	2	42	MAIN QUAD	R-403A	V	MID LEVEL PRESSURE TAP	MID #A	SG	16.00	G	Y	M	
5232	D	593	2	42	MAIN QUAD	R-403-A	V	LOW LEVEL PRESSURE TAP COLD	MID #A	LO	57.63	L	N	A	LO WASH
5239	C	597	2	42	MAIN QUAD	R-403B	V	MID LEVEL PRESSURE TAP	TOP #B	SG	16.00	G	Y	M	
5240	D	147	2	42	MAIN QUAD	R-403B	V	RAW GAS VALVE	TOP #B	SG	16.00	G	Y	M	
5241	D	153	2	42	MAIN QUAD	R-403B	V	DOWN RIVER GAS VALVE	TOP #B	SG	16.00	G	Y	M	
5242	D	606	2	42	MAIN QUAD	R-403-B	V	TOP LEVEL NORTH PRESSURE TAP	TOP #B	LO	57.63	L	N	A	NEW 4-93 TOP LEVEL
5243			2	42	MAIN QUAD	R-403-B	V	TOP LEVEL NORTH PRESSURE TAP EXTENDED	TOP #B	LO	57.63	L	Y	M	ADDED 12-95
5244	D	126	2	42	MAIN QUAD	R-403B	V	UNDER FIRE GAS VALVE	TOP #B	SG	16.00	G	Y	M	
5245	D	127	2	42	MAIN QUAD	R-403B	V	TOP PRESSURE TAP VALVE	TOP #B	SG	16.00	G	Y	M	
5246	A	197	2	42	MAIN QUAD	R-403B	V	TOP PRESSURE TAP	TOP #B	SG	16.00	G	Y	M	
5247	D	128	2	42	MAIN QUAD	R-403B	V	SUB GAS VALVE	TOP #B	SG	16.00	G	Y	M	
5248	D	602	2	42	MAIN QUAD	R-403-B	V	TOP LEVEL SOUTH STEAM TAP	TOP #B	LO	57.63	L	N	A	NEW 4-93 TOP LEVEL
5249	D	594	2	42	MAIN QUAD	R-403-B	V	LOW LEVEL PRESSURE TAP COLD	TOP #B	LO	57.63	L	N	A	LO WASH
5250	D	417	2	42	MAIN QUAD	R-403B	VT	RELIEF VALVE	TOP #B	SG	16.00	G	Y	M	
5260	D	141	2	42	MAIN QUAD	R-403C	V	RAW GAS VALVE	TOP #C	SG	16.00	G	Y	M	
5261	D	146	2	42	MAIN QUAD	R-403C	V	DOWN RIVER GAS VALVE	TOP #C	SG	16.00	G	Y	M	
5262	D	612	2	42	MAIN QUAD	R-403-D	V	TOP SOUTH PRESSURE TAP	TOP #C	LO	57.63	L	N	A	NEW 4-93 TOP LEVEL
5263			2	42	MAIN QUAD	R-403C	V	TOP SOUTH PRESSURE TAP EXTENDED	TOP #C	LO	57.63	L	Y	M	ADDED 12-95
5264	D	130	2	42	MAIN QUAD	R-403C	V	TOP PRESSURE TAP VALVE	TOP #C	SG	16.00	G	Y	M	
5265	A	200	2	42	MAIN QUAD	R-403C	V	TOP PRESSURE TAP	TOP #C	SG	16.00	G	Y	M	
5266	A	201	2	42	MAIN QUAD	R-403C	G	TOP PRESSURE TAP GAUGE	TOP #C	SG	16.00	G	Y	M	
5268	A	202	2	42	MAIN QUAD	R-403C	V	TOP PRESSURE TAP	TOP #C	SG	16.00	G	Y	M	
5269	D	131	2	42	MAIN QUAD	R-403C	V	SUB GAS VALVE	TOP #C	SG	16.00	G	Y	M	

ED_002508A_00000396-00002

5270	D	607	2	42	MAIN QUAD	R-403-C	V	TOP LEVEL SOUTH STEAM VALVE	TOP #C	LO	57.63	L	N	A	NEW 4-93 TOP LEVEL
5272	D	129	2	42	MAIN QUAD	R-403C	V	UNDER FIRE GAS VALVE	TOP #C	SG	16.00	G	Y	M	
5273	D	611	2	42	MAIN QUAD	R-403-C	V	TOP LEVEL NORTH PRESSURE TAP	TOP #C	LO	57.63	L	Y	M	NEW 4-93 TOP LEVEL
5274	C	498	2	42	MAIN QUAD	R-403C	V	MID LEVEL PRESSURE TAP	TOP #C	SG	16.00	G	N	A	
5275	D	595	2	42	MAIN QUAD	R-403-C	V	LOW LEVEL PRESSURE TAP COLD	TOP #C	LO	57.63	L	N	A	LO WASH
5277	D	416	2	42	MAIN QUAD	R-403C	VT	RELIEF VALVE	TOP #C	SG	16.00	G	Y	M	
5280	D	135	2	42	MAIN QUAD	R-403D	V	RAW GAS VALVE	TOP #D	SG	16.00	G	Y	M	
5281	D	140	2	42	MAIN QUAD	R-403D	V	DOWN RIVER GAS VALVE	TOP #D	SG	16.00	G	Y	M	
5282	D618		2	42	MAIN QUAD	R-403D	V	TOP SOUTH PRESSURE TAP	TOP #D	LO	57.63	L	Y	M	ADDED 12-95
5283	D	132	2	42	MAIN QUAD	R-403D	V	UNDER FIRE GAS VALVE	TOP #D	SG	16.00	G	Y	M	
5284	D	133	2	42	MAIN QUAD	R-403D	V	TOP PRESSURE TAP VALVE	TOP #D	SG	16.00	G	Y	M	
5285	A	203	2	42	MAIN QUAD	R-403D	V	TOP PRESSURE TAP	TOP #D	SG	16.00	G	Y	M	
5286	A206		2	42	MAIN QUAD	R-403D	G	TOP PRESSURE TAP GAUGE	TOP #D	SG	16.00	G	Y	M	ADDED 12-95
5288	A	205	2	42	MAIN QUAD	R-403D	V	TOP PRESSURE TAP	TOP #D	SG	16.00	G	Y	M	
5289	D	134	2	42	MAIN QUAD	R-403D	V	SUB GAS VALVE	TOP #D	SG	16.00	G	N	A	
5290	D	613	2	42	MAIN QUAD	R-403D	V	TOP N/MID LEVEL PRESSURE DIFFERENTIAL VA	TOP #D	LO	57.63	L	N	A	NEW 4-93 TOP LEVEL
5291	D	415	2	42	MAIN QUAD	R-403D	VT	RELIEF VALVE	TOP #D	SG	16.00	G	Y	M	
5292	D617		2	42	MAIN QUAD	R-403D	V	TOP LEVEL NORTH PRESSURE TAP	TOP #D	LO	57.63	L	N	A	ADDED 12-95
5293	C	499	2	42	MAIN QUAD	R-403D	V	MID LEVEL PRESSURE TAP	TOP #D	SG	16.00	G	N	A	
5294	D	596	2	42	MAIN QUAD	R-403-D	V	LOW LEVEL PRESSURE TAP COLD	TOP #D	LO	57.63	L	N	A	LO WASH

TABLE 43
REGISTRATION OF COMPONENTS IN BENZENE SERVICE
MAIN QUAD #4

5300	D	623	2	43	MAIN QUAD	R-404-A	V	UNDERFIRE GAS COLD SEPARATOR BLOCK VALVE	BOTTOM	LO	57.63	L	Y	MIU	LO WASH
5301	D	622	2	43	MAIN QUAD	R-404-A	V	DOWNRIVER GAS COLD SEPARATOR BLOCK VALVE	BOTTOM	LO	57.63	L	Y	MIU	LO WASH
5302	D	621	2	43	MAIN QUAD	R-404-A	V	SUB GAS COLD SEPARATOR BLOCKING VALVE	BOTTOM	LO	57.63	L	Y	MIU	LO WASH
5303	D	626	2	43	MAIN QUAD	R-404-B	V	UNDERFIRE GAS COLD SEPARATOR BLOCK VALVE	BOTTOM	LO	57.63	L	Y	MIU	LO WASH
5304	D	625	2	43	MAIN QUAD	R-404-B	V	DOWNRIVER GAS COLD SEPARATOR BLOCK VALVE	BOTTOM	LO	57.63	L	Y	MIU	LO WASH
5305	D	624	2	43	MAIN QUAD	R-404-B	V	SUB GAS COLD SEPARATOR BLOCKING VALVE	BOTTOM	LO	57.63	L	Y	MIU	LO WASH
5306	D	629	2	43	MAIN QUAD	R-404-C	V	UNDERFIRE GAS COLD SEPARATOR BLOCK VALVE	BOTTOM	LO	57.63	L	Y	MIU	LO WASH
5307	D	628	2	43	MAIN QUAD	R-404-C	V	DOWNRIVER GAS COLD SEPARATOR BLOCK VALVE	BOTTOM	LO	57.63	L	Y	MIU	LO WASH
5308	D	627	2	43	MAIN QUAD	R-404-C	V	SUB GAS COLD SEPARATOR BLOCKING VALVE	BOTTOM	LO	57.63	L	Y	MIU	LO WASH
5309	D	632	2	43	MAIN QUAD	R-404-D	V	UNDERFIRE GAS COLD SEPARATOR BLOCK VALVE	BOTTOM	LO	57.63	L	Y	MIU	LO WASH
5310	D	631	2	43	MAIN QUAD	R-404-D	V	DOWNRIVER GAS COLD SEPARATOR BLOCK VALVE	BOTTOM	LO	57.63	L	Y	MIU	LO WASH
5311	D	630	2	43	MAIN QUAD	R-404-D	V	SUB GAS COLD SEPARATOR BLOCKING VALVE	BOTTOM	LO	57.63	L	Y	MIU	LO WASH
5315	D	015	2	43	MAIN QUAD	QUAD 4	V	SUB GAS HEADER CLEANOUT VALVE	HEADER	SG	16.00	GV	N	N/A	
5316	C	472	2	43	MAIN QUAD	QUAD 4	V	BLOCKING VALVE NITROGEN PURGE	HEADER	SG	16.00	GV	Y	N/A	
5317	C	473	2	43	MAIN QUAD	QUAD 4	V	BLOCKING VALVE SUB GAS VACUUM LINE	HEADER	SG	16.00	GV	Y	N/A	
5318	C	474	2	43	MAIN QUAD	QUAD 4	V	CLEAN OUT VALVE SUB GAS VACUUM LINE	HEADER	SG	16.00	GV	Y	N/A	
5319	C	475	2	43	MAIN QUAD	QUAD 4	V	BLEED VALVE SUB GAS VACUUM LINE	HEADER	SG	16.00	GV	Y	N/A	
5320	D	219	2	43	MAIN QUAD	R-404A	V	RAW GAS VALVE	TOP #A	SG	16.00	G	Y	M	
5321	D	218	2	43	MAIN QUAD	R-404A	V	TOP PRESSURE TAP VALVE	TOP #A	SG	16.00	G	Y	M	
5322	D206		2	43	MAIN QUAD	R-404A	V	TOP PRESSURE TAP VALVE	TOP #A	SG	16.00	G	Y	M	ADDED 12-95
5323	D	207	2	43	MAIN QUAD	R-404D	V	SUB GAS VALVE	TOP #D	SG	16.00	G	Y	M	
5324	D	208	2	43	MAIN QUAD	R-404D	V	DOWN RIVER GAS VALVE	TOP #D	SG	16.00	G	Y	M	
5325	D	217	2	43	MAIN QUAD	R-404A	V	DOWN RIVER GAS VALVE	TOP #A	SG	16.00	G	Y	M	
5326	D	637	2	43	MAIN QUAD	R-404-A	V	TOP LEVEL SOUTH PRESSURE TAP	TOP #A	LO	57.63	L	N	A	NEW 4-93 TOP LEVEL
5327			2	43	MAIN QUAD	R-404-A	V	TOP LEVEL SOUTH PRESSURE TAP EXTENDED	TOP #A	LO	57.63	L	Y	M	ADDED 12-95
5328	D	184	2	43	MAIN QUAD	R-404A	V	SUB GAS VALVE	TOP #A	SG	16.00	G	Y	M	
5329	D	189	2	43	MAIN QUAD	R-404A	V	UNDER FIRE GAS VALVE	TOP #A	SG	16.00	G	Y	M	
5330	D	641	2	43	MAIN QUAD	R-404-A	V	TOP LEVEL NORTH PRESSURE TAP	TOP #A	LO	57.63	L	Y	M	NEW 4-93 TOP LEVEL
5331	D	405	2	43	MAIN QUAD	R-404A	VT	RELIEF VALVE	TOP #A	SG	16.00	G	Y	M	
5333	D	019	2	43	MAIN QUAD	R-404A	V	MID LEVEL PRESSURE TAP VALVE	TOP #A	SG	16.00	G	Y	M	
5334	D	633	2	43	MAIN QUAD	R-404-A	V	LOW LEVEL PRESSURE TAP COLD	TOP #A	LO	57.63	L	N	A	LO WASH
5340	D	216	2	43	MAIN QUAD	R-404B	V	RAW GAS VALVE	TOP #B	SG	16.00	G	Y	M	
5341	D	215	2	43	MAIN QUAD	R-404B	V	TOP PRESSURE TAP VALVE	TOP #B	SG	16.00	G	Y	M	
5342	D	209	2	43	MAIN QUAD	R-404D	V	TOP PRESSURE TAP VALVE	TOP #D	SG	16.00	G	Y	M	
5343	D	211	2	43	MAIN QUAD	R-404C	V	DOWN RIVER GAS VALVE	TOP #C	SG	16.00	G	Y	M	
5344	D	214	2	43	MAIN QUAD	R-404B	V	DOWN RIVER GAS VALVE	TOP #B	SG	16.00	G	Y	M	
5345	D	642	2	43	MAIN QUAD	R-404-B	V	TOP LEVEL SOUTH PRESSURE TAP	TOP #B	LO	57.63	L	N	A	NEW 4-93 TOP LEVEL
5346			2	43	MAIN QUAD	R-404-B	V	TOP LEVEL SOUTH PRESSURE TAP EXTENDED	TOP #B	LO	57.63	L	Y	M	
5347	D	190	2	43	MAIN QUAD	R-404B	V	SUB GAS VALVE	TOP #B	SG	16.00	G	Y	M	
5348	D	195	2	43	MAIN QUAD	R-404B	V	UNDER FIRE GAS VALVE	TOP #B	SG	16.00	G	Y	M	
5349	D	646	2	43	MAIN QUAD	R-404-B	V	TOP LEVEL NORTH PRESSURE TAP	TOP #B	LO	57.63	L	N	A	NEW 4-93 TOP LEVEL
5350	D	404	2	43	MAIN QUAD	R-404B	VT	RELIEF VALVE	TOP #B	SG	15.00	G	Y	M	
5352	D	018	2	43	MAIN QUAD	R-404B	V	MID LEVEL PRESSURE TAP VALVE	TOP #B	SG	15.00	G	Y	M	
5353	D	634	2	43	MAIN QUAD	R-404-B	V	LOW LEVEL PRESSURE TAP COLD	TOP #B	LO	57.63	L	N	A	LO WASH
5360	D	213	2	43	MAIN QUAD	R-404C	V	RAW GAS VALVE	TOP #C	SG	16.00	G	Y	M	
5361	D	212	2	43	MAIN QUAD	R-404C	V	TOP PRESSURE TAP VALVE	TOP #C	SG	16.00	G	Y	M	
5362			2	43	MAIN QUAD	R-404C	V	TOP PRESSURE TAP VALVE	TOP #C	SG	16.00	G	Y	M	ADDED 12-95
5363			2	43	MAIN QUAD	R-404C	V	TOP PRESSURE TAP VALVE	TOP #C	SG	16.00	G	Y	M	ADDED 12-95
5364			2	43	MAIN QUAD	R-404C	V	TOP PRESSURE TAP VALVE	TOP #C	SG	16.00	G	Y	M	ADDED 12-95
5365			2	43	MAIN QUAD	R-404C	V	DOWN RIVER GAS VALVE	TOP #C	SG	16.00	G	Y	M	ADDED 12-95
5366	D	647	2	43	MAIN QUAD	R-404C	V	TOP PRESSURE TAP VALVE	TOP #C	LO	57.63	L	N	A	NEW 4-93 TOP LEVEL

ED_002508A_00000396-00004

5367		2	43	MAIN QUAD	R-404C	V	TOP PRESSURE TAP VALVE EXTENSION	TOP #C	LO	57.63	L	Y	M	ADDED 12-95
5368	D 196	2	43	MAIN QUAD	R-404C	V	SUB GAS VALVE	TOP #C	SG	16.00	G	Y	M	
5369	D 201	2	43	MAIN QUAD	R-404C	V	UNDER FIRE GAS VALVE	TOP #C	SG	16.00	G	Y	M	
5370	D 651	2	43	MAIN QUAD	R-404-C	V	TOP LEVEL NORTH PRESSURE TAP	TOP #C	LO	57.63	L	Y	M	NEW 4-93 TOP LEVEL
5372	D 017	2	43	MAIN QUAD	R-404C	V	MID LEVEL PRESSURE TAP VALVE	TOP #C	SG	16.00	G	Y	M	
5373	D 635	2	43	MAIN QUAD	R-404-C	V	LOW LEVEL PRESSURE TAP COLD	TOP #C	LO	57.63	L	N	A	LO WASH
5374	D 403	2	43	MAIN QUAD	R-404C	VT	RELIEF VALVE	TOP #D	SG	16.00	G	Y	M	
5380	D 210	2	43	MAIN QUAD	R-404D	V	RAW GAS VALVE	TOP #D	SG	16.00	G	Y	M	
5381		2	43	MAIN QUAD	R-404D	V	TOP PRESSURE TAP VALVE	TOP #D	SG	16.00	G	Y	M	ADDED 12-95
5382		2	43	MAIN QUAD	R-404D	V	TOP PRESSURE TAP VALVE	TOP #D	SG	16.00	G	Y	M	ADDED 12-95
5383		2	43	MAIN QUAD	R-404D	V	TOP PRESSURE TAP VALVE	TOP #D	SG	16.00	G	Y	M	ADDED 12-95
5384	D 652	2	43	MAIN QUAD	R-404D	V	TOP SOUTH STEAM TAP	TOP #D	LO	57.63	L	N	A	NEW 4-93 TOP LEVEL
5386	D 202	2	43	MAIN QUAD	R-404D	V	UNDERFIRE GAS VALVE	TOP #D	SG	16.00	G	Y	M	
5387	D220	2	43	MAIN QUAD	R-404D	V	SUB GAS VALVE	TOP #D	SG	16.00	G	Y	M	ADDED 12-95
5388	D 656	2	43	MAIN QUAD	R-404-D	V	TOP LEVEL NORTH PRESSURE TAP	TOP #D	LO	57.63	L	N	A	NEW 4-93 TOP LEVEL
5389	D 402	2	43	MAIN QUAD	R-404D	VT	RELIEF VALVE	TOP #D	SG	16.00	G	Y	M	
5391	D 016	2	43	MAIN QUAD	R-404D	V	MID LEVEL PRESSURE TAP VALVE	TOP #D	SG	16.00	G	Y	M	
5392	D 636	2	43	MAIN QUAD	R-404-D	V	LOW LEVEL PRESSURE TAP COLD	TOP #D	LO	57.63	L	N	A	LO WASH

TABLE 44
REGISTRATION OF COMPONENTS IN BENZENE SERVICE
MAIN QUAD NO. 5

5400	D	661	2	44	MAIN QUAD	R-405-A	V	SUB GAS COLD SEPARATOR BLOCKING VALVE	BOTTOM	LO	57.63	L	Y	MIU	LO WASH
5401	D	662	2	44	MAIN QUAD	R-405-A	V	DOWNRIVER GAS COLD SEPARATOR BLOCK VALVE	BOTTOM	LO	57.63	L	Y	MIU	LO WASH
5402	D	663	2	44	MAIN QUAD	R-405-A	V	UNDERFIRE GAS COLD SEPARATOR BLOCK VALVE	BOTTOM	LO	57.63	L	Y	MIU	LO WASH
5403	D	664	2	44	MAIN QUAD	R-405-B	V	SUB GAS COLD SEPARATOR BLOCKING VALVE	BOTTOM	LO	57.63	L	Y	MIU	LO WASH
5404	D	665	2	44	MAIN QUAD	R-405-B	V	DOWNRIVER GAS COLD SEPARATOR BLOCK VALVE	BOTTOM	LO	57.63	L	Y	MIU	LO WASH
5405	D	666	2	44	MAIN QUAD	R-405-B	V	UNDERFIRE GAS COLD SEPARATOR BLOCK VALVE	BOTTOM	LO	57.63	L	Y	MIU	LO WASH
5406	D	667	2	44	MAIN QUAD	R-405-C	V	SUB GAS COLD SEPARATOR BLOCKING VALVE	BOTTOM	LO	57.63	L	Y	MIU	LO WASH
5407	D	668	2	44	MAIN QUAD	R-405-C	V	DOWNRIVER GAS COLD SEPARATOR BLOCK VALVE	BOTTOM	LO	57.63	L	Y	MIU	LO WASH
5408	D	669	2	44	MAIN QUAD	R-405-C	V	UNDERFIRE GAS COLD SEPARATOR BLOCK VALVE	BOTTOM	LO	57.63	L	Y	MIU	LO WASH
5409	D	670	2	44	MAIN QUAD	R-405-D	V	SUB GAS COLD SEPARATOR BLOCKING VALVE	BOTTOM	LO	57.63	L	Y	MIU	LO WASH
5410	D	671	2	44	MAIN QUAD	R-405-D	V	DOWNRIVER GAS COLD SEPARATOR BLOCK VALVE	BOTTOM	LO	57.63	L	Y	MIU	LO WASH
5411	D	672	2	44	MAIN QUAD	R-405-D	V	UNDERFIRE GAS COLD SEPARATOR BLOCK VALVE	BOTTOM	LO	57.63	L	Y	MIU	LO WASH
5415	C	500	2	44	MAIN QUAD	QUAD 5	V	SUB GAS HEADER CLEANOUT VALVE	HEADER	SG	16.00	GV	N	A	
5416	C	486	2	44	MAIN QUAD	QUAD 5	V	BLOCKING VALVE NITROGEN PURGE	HEADER	SG	16.00	GV	Y	N/A	
5417	C	487	2	44	MAIN QUAD	QUAD 5	V	BLOCKING VALVE SUB GAS VACUUM LINE	HEADER	SG	16.00	GV	Y	N/A	
5418	C	488	2	44	MAIN QUAD	QUAD 5	V	CLEAN OUT VALVE SUB GAS VACUUM LINE	HEADER	SG	16.00	GV	Y	N/A	
5419	C	489	2	44	MAIN QUAD	QUAD 5	V	BLEED VALVE SUB GAS VACUUM LINE	HEADER	SG	16.00	GV	Y	N/A	
5420	D	299	2	44	MAIN QUAD	R-405A	V	RAW GAS VALVE	TOP #A	SG	16.00	G	Y	M	
5421	D	414	2	44	MAIN QUAD	R-405A	V	CLEANOUT VALVE ON TOP ACCESS HOLE	TOP #A	SG	16.00	G	Y	M	
5422	D	297	2	44	MAIN QUAD	R-405A	V	DOWN RIVER GAS VALVE	TOP #A	SG	16.00	G	Y	M	
5423	D	681	2	44	MAIN QUAD	R-405-A	V	TOP LEVEL NORTH PRESSURE TAP	TOP #A	LO	57.63	L	N	A	NEW 4-93 TOP LEVEL
5424			2	44	MAIN QUAD	R-405-A	V	TOP LEVEL NORTH PRESSURE TAP EXTENSION	TOP #A	LO	57.63	L	Y	M	ADDED 12-95
5425	D	342	2	44	MAIN QUAD	R-405A	V	UNDERFIRE GAS VALVE	TOP #A	SG	16.00	G	Y	M	
5426	D	338	2	44	MAIN QUAD	R-405A	G	TOP PRESSURE GAUGE	TOP #A	SG	16.00	G	Y	M	
5427	D	339	2	44	MAIN QUAD	R-405A	PD	TOP PRESSURE TRANSDUCER	TOP #A	SG	16.00	G	Y	M	
5428	D	341	2	44	MAIN QUAD	R-405A	V	TOP PRESSURE TAP VALVE	TOP #A	SG	16.00	G	Y	M	
5429	D	340	2	44	MAIN QUAD	R-405A	V	TOP PRESSURE TAP VALVE	TOP #A	SG	16.00	G	Y	M	
5430	D	337	2	44	MAIN QUAD	R-405A	V	SUB GAS VALVE	TOP #A	SG	16.00	G	Y	M	
5431	D	677	2	44	MAIN QUAD	R-405-A	V	TOP LEVEL SOUTH STEAM TAP	TOP #A	LO	57.63	L	Y	M	NEW 4-93 TOP LEVEL
5432	D	413	2	44	MAIN QUAD	R-405A	VT	RELIEF VALVE	TOP #A	SG	16.00	G	Y	M	
5434	D	001	2	44	MAIN QUAD	R-405A	V	MID LEVEL PRESSURE TAP VALVE	TOP #A	SG	16.00	G	Y	M	
5435	D	673	2	44	MAIN QUAD	R-405-A	V	LOW LEVEL PRESSURE TAP COLD	TOP #A	LO	0.576	L	N	A	LO WASH
5440	D	305	2	44	MAIN QUAD	R-405B	V	RAW GAS VALVE	TOP #B	SG	16.00	G	Y	M	
5441	D	300	2	44	MAIN QUAD	R-405B	V	DOWN RIVER GAS VALVE	TOP #B	SG	16.00	G	Y	M	
5442	D	686	2	44	MAIN QUAD	R-405-B	V	TOP LEVEL NORTH PRESSURE TAP	TOP #B	LO	57.63	L	N	A	NEW 4-93 TOP LEVEL
5443			2	44	MAIN QUAD	R-405-B	V	TOP LEVEL NORTH PRESSURE TAP EXTENSION	TOP #B	LO	57.63	L	Y	M	ADDED 12-95
5444	D	336	2	44	MAIN QUAD	R-405B	V	UNDERFIRE GAS VALVE	TOP #B	SG	16.00	G	Y	M	
5445	D	335	2	44	MAIN QUAD	R-405B	V	TOP PRESSURE TAP VALVE	TOP #B	SG	16.00	G	Y	M	
5446	D	333	2	44	MAIN QUAD	R-405B	PD	TOP PRESSURE TRANSDUCER	TOP #B	SG	16.00	G	Y	M	
5447	D	334	2	44	MAIN QUAD	R-405B	V	TOP PRESSURE TAP VALVE	TOP #B	SG	16.00	G	Y	M	
5448	D	332	2	44	MAIN QUAD	R-405B	G	TOP PRESSURE GAUGE	TOP #B	SG	16.00	G	Y	M	
5449	D	331	2	44	MAIN QUAD	R-405B	V	SUB GAS VALVE	TOP #B	SG	16.00	G	Y	M	
5450	D	682	2	44	MAIN QUAD	R-405-B	V	TOP LEVEL SOUTH STEAM TAP	TOP #B	LO	57.63	L	N	A	NEW 4-93 TOP LEVEL
5452	D	002	2	44	MAIN QUAD	R-405B	V	MID LEVEL PRESSURE TAP VALVE	TOP #B	SG	16.00	G	Y	M	
5453	D	674	2	44	MAIN QUAD	R-405-B	V	LOW LEVEL PRESSURE TAP COLD	TOP #B	LO	57.63	L	N	A	LO WASH
5454	D	412	2	44	MAIN QUAD	R-405B	VT	RELIEF VALVE	TOP #B	SG	16.00	G	Y	M	
5460	D	311	2	44	MAIN QUAD	R-405C	V	RAW GAS VALVE	TOP #B	SG	16.00	G	Y	M	
5461	D	306	2	44	MAIN QUAD	R-405C	V	DOWN RIVER GAS VALVE	TOP #C	SG	16.00	G	Y	M	
5462	D	691	2	44	MAIN QUAD	R-405-C	V	TOP LEVEL NORTH PRESSURE TAP VALVE	TOP #C	LO	57.63	L	N	A	NEW 4-93 TOP LEVEL
5463			2	44	MAIN QUAD	R-405-C	V	TOP LEVEL NORTH PRESSURE TAP VALVE	TOP #C	LO	57.63	L	Y	M	ADDED 12-95
5464	D	330	2	44	MAIN QUAD	R-405C	V	TOP LEVEL NORTH PRESSURE TAP VALVE	TOP #C	SG	16.00	G	Y	M	

ED_002508A_00000396-00006

5465	D	329	2	44	MAIN QUAD	R-405C	V	DOWN RIVER GAS VALVE	TOP #C	SG	16.00	G	Y	M	
5466	D	328	2	44	MAIN QUAD	R-405C	V	TOP PRESSURE TAP VALVE	TOP #C	SG	16.00	G	Y	M	
5467	D	326	2	44	MAIN QUAD	R-405C	G	TOP PRESSURE GAUGE	TOP #C	SG	16.00	G	Y	M	
5468	D	327	2	44	MAIN QUAD	R-405C	PD	TOP PRESSURE TRANSDUCER	TOP #C	SG	16.00	G	Y	M	
5469	D	325	2	44	MAIN QUAD	R-405C	V	SUB GAS VALVE	TOP #C	SG	16.00	G	Y	M	
5470	D	687	2	44	MAIN QUAD	R-405-C	V	TOP LEVEL SOUTH STEAM VALVE	TOP #C	LO	57.63	L	N	A	NEW 4-93 TOP LEVEL
5471	D	411	2	44	MAIN QUAD	R-405C	V	RELIEF VALVE	TOP #C	SG	16.00	G	Y	M	
5473	D	003	2	44	MAIN QUAD	R-405C	V	MID LEVEL PRESSURE TAP VALVE	TOP #C	SG	16.00	G	Y	M	
5474	D	004	2	44	MAIN QUAD	R-405D	V	MID LEVEL PRESSURE TAP VALVE	TOP #C	SG	16.00	G	Y	M	
5475	D	675	2	44	MAIN QUAD	R-405-C	V	LOW LEVEL PRESSURE TAP COLD	TOP #C	LO	0.578	L	Y	MIU	LO WASH
5480	D	318	2	44	MAIN QUAD	R-405D	V	RAW GAS VALVE	TOP #D	SG	16.00	G	Y	M	
5481	D	312	2	44	MAIN QUAD	R-405D	V	DOWN RIVER GAS VALVE	TOP #D	SG	16.00	G	Y	M	
5482	D	696	2	44	MAIN QUAD	R-405-D	V	TOP LEVEL NORTH PRESSURE TAP	TOP #D	LO	57.63	L	N	A	NEW 4-93 TOP LEVEL
5483			2	44	MAIN QUAD	R-405-D		TOP LEVEL NORTH PRESSURE TAP EXTENSION	TOP #D	LO	57.63	L	Y	M	ADDED 12-95
5484	D	324	2	44	MAIN QUAD	R-405D	V	TOP LEVEL NORTH PRESSURE TAP	TOP #D	LO	57.63	L	Y	M	
5485	D	323	2	44	MAIN QUAD	R-405D	V	TOP PRESSURE TAP VALVE	TOP #D	SG	16.00	G	Y	M	
5486	D	322	2	44	MAIN QUAD	R-405D	V	TOP PRESSURE TAP VALVE	TOP #D	SG	16.00	G	Y	M	
5487	D	320	2	44	MAIN QUAD	R-405D	G	TOP PRESSURE GAUGE	TOP #D	SG	16.00	G	Y	M	
5488	D	321	2	44	MAIN QUAD	R-405D	PD	TOP PRESSURE TRANSDUCER	TOP #D	SG	16.00	G	Y	M	
5489	D	319	2	44	MAIN QUAD	R-405D	V	SUB GAS VALVE	TOP #D	SG	16.00	G	Y	M	
5490	D	692	2	44	MAIN QUAD	R-405-D	V	TOP SOUTH STEAM TAP	TOP #D	LO	57.63	L	N	A	NEW 4-93 TOP LEVEL
5491	D	410	2	44	MAIN QUAD	R-405D	VT	RELIEF VALVE	TOP #D	SG	16.00	G	Y	M	
5494	D	676	2	44	MAIN QUAD	R-405-D	V	LOW LEVEL PRESSURE TAP COLD	TOP #D	LO	57.63	L	Y	MIU	LO WASH

TABLE 45
REGISTRATION OF COMPONENTS IN BENZENE SERVICE
MAIN QUAD NO. 6

5500	D	703	2	45	MAIN QUAD	R-406-A	V	UNDERFIRE GAS COLD SEPARATOR BLOCK VALVE	BOTTOM	LO	57.63	L	Y	MU	LO WASH
5501	D	702	2	45	MAIN QUAD	R-406-A	V	DOWNRIVER GAS COLD SEPARATOR BLOCK VALVE	BOTTOM	LO	57.63	L	Y	MU	LO WASH
5502	D	701	2	45	MAIN QUAD	R-406-A	V	SUB GAS COLD SEPARATOR BLOCKING VALVE	BOTTOM	LO	57.63	L	Y	MU	LO WASH
5503	D	706	2	45	MAIN QUAD	R-406-B	V	UNDERFIRE GAS COLD SEPARATOR BLOCK VALVE	BOTTOM	LO	57.63	L	Y	MU	LO WASH
5504	D	705	2	45	MAIN QUAD	R-406-B	V	DOWNRIVER GAS COLD SEPARATOR BLOCK VALVE	BOTTOM	LO	57.63	L	Y	MU	LO WASH
5505	D	704	2	45	MAIN QUAD	R-406-B	V	SUB GAS COLD SEPARATOR BLOCKING VALVE	BOTTOM	LO	57.63	L	Y	MU	LO WASH
5506	D	709	2	45	MAIN QUAD	R-406-C	V	UNDERFIRE GAS COLD SEPARATOR BLOCK VALVE	BOTTOM	LO	57.63	L	Y	MU	LO WASH
5507	D	708	2	45	MAIN QUAD	R-406-C	V	DOWNRIVER GAS COLD SEPARATOR BLOCK VALVE	BOTTOM	LO	57.63	L	Y	MU	LO WASH
5508	D	707	2	45	MAIN QUAD	R-406-C	V	SUB GAS COLD SEPARATOR BLOCKING VALVE	BOTTOM	LO	57.63	L	Y	MU	LO WASH
5509	D	712	2	45	MAIN QUAD	R-406-D	V	UNDERFIRE GAS COLD SEPARATOR BLOCK VALVE	BOTTOM	LO	57.63	L	Y	MU	LO WASH
5510	D	711	2	45	MAIN QUAD	R-406-D	V	DOWNRIVER GAS COLD SEPARATOR BLOCK VALVE	BOTTOM	LO	57.63	L	Y	MU	LO WASH
5511	D	710	2	45	MAIN QUAD	R-406-D	V	SUB GAS COLD SEPARATOR BLOCKING VALVE	BOTTOM	LO	57.63	L	Y	MU	LO WASH
5515	D	010	2	45	MAIN QUAD	QUAD 6	V	SUB GAS HEADER CLEANOUT VALVE	HEADER	SG	16.00	GV	N	N/A	
5516	C	480	2	45	MAIN QUAD	QUAD 6	V	BLOCKING VALVE NITROGEN PURGE	HEADER	SG	16.00	GV	Y	N/A	
5517	C	482	2	45	MAIN QUAD	QUAD 6	V	CLEAN OUT VALVE SUB GAS VACUUM LINE	HEADER	SG	16.00	GV	Y	N/A	
5518	C	481	2	45	MAIN QUAD	QUAD 6	V	BLOCKING VALVE SUB GAS VACUUM LINE	HEADER	SG	16.00	GV	Y	N/A	
5519	C	483	2	45	MAIN QUAD	QUAD 6	V	BLEED VALVE SUB GAS VACUUM LINE	HEADER	SG	16.00	GV	Y	N/A	
5520	D	221	2	45	MAIN QUAD	R-406A	V	RAW GAS VALVE	TOP #A	SG	16.00	G	Y	M	
5521	D	225	2	45	MAIN QUAD	R-406A	V	TOP PRESSURE TAP VALVE	TOP #A	SG	16.00	G	Y	M	
5522	D	224	2	45	MAIN QUAD	R-406A	V	TOP PRESSURE TAP VALVE	TOP #A	SG	16.00	G	Y	M	
5523	D	222	2	45	MAIN QUAD	R-406A	G	TOP PRESSURE GAUGE	TOP #A	SG	16.00	G	Y	M	
5524	D	223	2	45	MAIN QUAD	R-406A	PD	TOP PRESSURE TRANSDUCER	TOP #A	SG	16.00	G	Y	M	
5525	D	226	2	45	MAIN QUAD	R-406A	V	DOWN RIVER GAS VALVE	TOP #A	SG	16.00	G	Y	M	
5526	D	717	2	45	MAIN QUAD	R-406-A	V	TOP LEVEL SOUTH STEAM TAP	TOP #A	LO	57.63	L	N	A	NEW 4-93 TOP LEVEL
5527			2	45	MAIN QUAD	R-406-A	V	TOP LEVEL SOUTH STEAM TAP EXTENSION	TOP #A	LO	57.63	L	Y	M	ADDED 12-95
5528	D	265	2	45	MAIN QUAD	R-406A	V	UNDER FIRE GAS VALVE	TOP #A	SG	16.00	G	Y	M	
5529	D	270	2	45	MAIN QUAD	R-406A	V	SUB GAS VALVE	TOP #A	SG	16.00	G	Y	M	
5530	D	400	2	45	MAIN QUAD	R-406A	V	CLEANOUT ON TOP ACCESS HOLE	TOP #A	SG	16.00	G	Y	M	
5531	D	721	2	45	MAIN QUAD	R-406-A	V	TOP LEVEL NORTH PRESSURE TAP	TOP #A	LO	57.63	L	Y	M	NEW 4-93 TOP LEVEL
5532	D	399	2	45	MAIN QUAD	R-406A	VT	RELIEF VALVE	TOP #A	SG	16.00	G	Y	M	
5534	D	011	2	45	MAIN QUAD	R-406A	V	MID LEVEL PRESSURE TAP VALVE	TOP #A	SG	16.00	G	Y	M	
5535	D	713	2	45	MAIN QUAD	R-406-A	V	LOW LEVEL PRESSURE TAP COLD	TOP #A	LO	57.63	L	N	A	LO WASH
5540	D	227	2	45	MAIN QUAD	R-406B	V	RAW GAS VALVE	TOP #B	SG	16.00	G	Y	M	
5541	D	231	2	45	MAIN QUAD	R-406B	V	TOP PRESSURE TAP VALVE	TOP #B	SG	16.00	G	Y	M	
5542	D	230	2	45	MAIN QUAD	R-406B	V	TOP PRESSURE TAP VALVE	TOP #B	SG	16.00	G	Y	M	
5543	D	229	2	45	MAIN QUAD	R-406B	PD	TOP PRESSURE TRANSDUCER	TOP #B	SG	16.00	G	Y	M	
5544	D	232	2	45	MAIN QUAD	R-406B	V	DOWN RIVER GAS VALVE	TOP #B	SG	16.00	G	Y	M	
5545	D	722	2	45	MAIN QUAD	R-406-B	V	TOP LEVEL SOUTH STEAM TAP	TOP #B	LO	57.63	L	N	A	NEW 4-93 TOP LEVEL
5546			2	45	MAIN QUAD	R-406-B	V	TOP LEVEL SOUTH STEAM TAP EXTENSION	TOP #B	LO	57.63	L	Y	M	ADDED 2-95
5547	D	259	2	45	MAIN QUAD	R-406B	V	UNDER FIRE GAS VALVE	TOP #B	SG	16.00	G	Y	M	
5548	D	264	2	45	MAIN QUAD	R-406B	V	SUB GAS VALVE	TOP #B	SG	16.00	G	Y	M	
5549	D	401	2	45	MAIN QUAD	R-406B	V	CLEANOUT ON TOP ACCESS HOLE	TOP #B	SG	16.00	G	N	A	
5550	D	726	2	45	MAIN QUAD	R-406-B	V	TOP LEVEL NORTH PRESSURE TAP	TOP #B	LO	57.63	L	N	A	NEW 4-93 TOP LEVEL
5551	D	398	2	45	MAIN QUAD	R-406B	VT	RELIEF VALVE	TOP #B	SG	16.00	G	Y	M	
5553	D	012	2	45	MAIN QUAD	R-406B	V	MID LEVEL PRESSUTRE TAP VALVE	TOP #B	SG	16.00	G	Y	M	
5554	D	714	2	45	MAIN QUAD	R-406-B	V	LOW LEVEL PRESSURE TAP COLD	TOP #B	LO	57.63	L	N	A	LO WASH
5560	D	233	2	45	MAIN QUAD	R-406C	V	RAW GAS VALVE	TOP #C	SG	16.00	G	Y	M	
5561	D	238	2	45	MAIN QUAD	R-406C	V	DOWN RIVER GAS VALVE	TOP #C	SG	16.00	G	Y	M	
5562	D	236	2	45	MAIN QUAD	R-406C	V	TOP PRESSURE TAP VALVE	TOP #C	SG	16.00	G	Y	M	
5563	D	234	2	45	MAIN QUAD	R-406C	G	TOP PRESSURE GAUGE	TOP #C	SG	16.00	G	Y	M	
5564	D	235	2	45	MAIN QUAD	R-406C	PD	TOP PRESSURE TRANSDUCER	TOP #C	SG	16.00	G	Y	M	

ED_002508A_00000396-00008

5565	D	237	2	45	MAIN QUAD	R-406C	V	TOP PRESSURE TAP VALVE	TOP #C	SG	16.00	G	Y	M	
5566	D	727	2	45	MAIN QUAD	R-406-C	V	TOP LEVEL SOUTH STEAM VALVE	TOP #C	LO	57.63	L	N	A	NEW 4-93 TOP LEVEL
5567			2	45	MAIN QUAD	R-406-C	V	TOP LEVEL SOUTH STEAM VALVE EXCTENSION	TOP #C	LO	57.63	L	Y	M	ADDED 2-95
5568	D	253	2	45	MAIN QUAD	R-406C	V	UNDER FIRE GAS VALVE	TOP #C	SG	16.00	G	Y	M	
5569	D	258	2	45	MAIN QUAD	R-406C	V	SUB GAS VALVE	TOP #C	SG	16.00	G	Y	M	
5570	D	731	2	45	MAIN QUAD	R-406-C	V	TOP LEVEL NORTH PRESSURE TAP	TOP #C	LO	57.63	L	N	A	NEW 4-93 TOP LEVEL
5571	D	397	2	45	MAIN QUAD	R-406C	V	RELIEF VALVE	TOP #C	SG	16.00	G	Y	M	
5573	D	013	2	45	MAIN QUAD	R-406C	V	MID LEVEL PRESSURE TAP VALVE	TOP #C	SG	16.00	G	Y	M	
5574	D	715	2	45	MAIN QUAD	R-406-C	V	LOW LEVEL PRESSURE TAP COLD	TOP #C	LO	57.63	L	N	A	LO WASH
5580	D	240	2	45	MAIN QUAD	R-406D	V	RAW GAS VALVE	TOP #D	SG	16.00	G	Y	M	
5581	D	244	2	45	MAIN QUAD	R-406D	V	TOP PRESSURE TAP VALVE	TOP #D	SG	16.00	G	Y	M	
5582	D	243	2	45	MAIN QUAD	R-406D	V	TOP PRESSURE TAP VALVE	TOP #D	SG	16.00	G	Y	M	
5583	D	242	2	45	MAIN QUAD	R-406D	PD	TOP PRESSURE TRANSDUCER	TOP #D	SG	16.00	G	Y	M	
5584	D	245	2	45	MAIN QUAD	R-406D	V	DOWN RIVER GAS VALVE	TOP #D	SG	16.00	G	Y	M	
5585	D	732	2	45	MAIN QUAD	R-406-D	V	TOP SOUTH STEAM TAP	TOP #D	LO	57.63	L	N	A	NEW 4-93 TOP LEVEL
5586	D	246	2	45	MAIN QUAD	R-406D	V	UNDER FIRE GAS VALVE	TOP #D	SG	16.00	G	Y	M	
5587	D	252	2	45	MAIN QUAD	R-406D	V	SUB GAS VALVE	TOP #D	SG	16.00	G	Y	M	
5588	D	736	2	45	MAIN QUAD	R-406-D	V	TOP LEVEL NORTH PRESSURE TAP	TOP #D	LO	57.63	L	N	A	NEW 4-93 TOP LEVEL
5589	D	396	2	45	MAIN QUAD	R-406D	VT	RELIEF VALVE	TOP #D	SG	16.00	G	Y	M	
5591	D	014	2	45	MAIN QUAD	R-406D	V	MID LEVEL PRESSURE TAP VALVE	TOP #D	SG	16.00	G	Y	M	
5592	D	716	2	45	MAIN QUAD	R-406-D	V	LOW LEVEL PRESSURE TAP COLD	TOP #D	LO	57.63	L	N	A	LO WASH

ED_002508A_00000396-00009

TABLE 46
REGISTRATION OF COMPONENTS IN BENZENE SERVICE
MAIN QUAD NO. 7

5600	D	750	2	46	MAIN QUAD	R-407-D	V	SUB GAS COLD SEPARATOR BLOCKING VALVE	BOTTOM	LO	57.63	L	Y	MIU	LO WASH
5601	D	751	2	46	MAIN QUAD	R-407-D	V	DOWNRIVER GAS COLD SEPARATOR BLOCK VALVE	BOTTOM	LO	57.63	L	Y	MIU	LO WASH
5602	D	752	2	46	MAIN QUAD	R-407-D	V	UNDERFIRE GAS COLD SEPARATOR BLOCK VALVE	BOTTOM	LO	57.63	L	Y	MIU	LO WASH
5603	D	747	2	46	MAIN QUAD	R-407-C	V	SUB GAS COLD SEPARATOR BLOCKING VALVE	BOTTOM	LO	57.63	L	Y	MIU	LO WASH
5604	D	748	2	46	MAIN QUAD	R-407-C	V	DOWNRIVER GAS COLD SEPARATOR BLOCK VALVE	BOTTOM	LO	57.63	L	Y	MIU	LO WASH
5605	D	749	2	46	MAIN QUAD	R-407-C	V	UNDERFIRE GAS COLD SEPARATOR BLOCK VALVE	BOTTOM	LO	57.63	L	Y	MIU	LO WASH
5606	D	744	2	46	MAIN QUAD	R-407-B	V	SUB GAS COLD SEPARATOR BLOCKING VALVE	BOTTOM	LO	57.63	L	Y	MIU	LO WASH
5607	D	745	2	46	MAIN QUAD	R-407-B	V	DOWNRIVER GAS COLD SEPARATOR BLOCK VALVE	BOTTOM	LO	57.63	L	Y	MIU	LO WASH
5608	D	746	2	46	MAIN QUAD	R-407-B	V	UNDERFIRE GAS COLD SEPARATOR BLOCK VALVE	BOTTOM	LO	57.63	L	Y	MIU	LO WASH
5609	D	741	2	46	MAIN QUAD	R-407-A	V	SUB GAS COLD SEPARATOR BLOCKING VALVE	BOTTOM	LO	57.63	L	Y	MIU	LO WASH
5610	D	742	2	46	MAIN QUAD	R-407-A	V	DOWNRIVER GAS COLD SEPARATOR BLOCK VALVE	BOTTOM	LO	57.63	L	Y	MIU	LO WASH
5611	D	743	2	46	MAIN QUAD	R-407-A	V	UNDERFIRE GAS COLD SEPARATOR BLOCK VALVE	BOTTOM	LO	57.63	L	Y	MIU	LO WASH
5615	D	005	2	46	MAIN QUAD	QUAD 7	V	SUB GAS HEADER CLEAN OUT VALVE	HEADER	SG	16.00	GV	N	N/A	
5616	C	484	2	46	MAIN QUAD	QUAD 7	V	BLOCKING VALVE NITROGEN PURGE	HEADER	SG	16.00	GV	Y	N/A	
5617	C	485	2	46	MAIN QUAD	QUAD 7	V	BLOCKING VALVE SUB GAS VACUUM LINE	HEADER	SG	16.00	GV	Y	N/A	
5620	D	356	2	46	MAIN QUAD	R-407D	V	RAW GAS VALVE	TOP #D	SG	16.00	G	Y	M	
5621	D	359	2	46	MAIN QUAD	R-407D	V	DOWN RIVER GAS VALVE	TOP #D	SG	16.00	G	Y	M	
5622	D	360	2	46	MAIN QUAD	R-407D	V	UNDERFIRE GAS VALVE	TOP #D	SG	16.00	G	Y	M	
5623	D	363	2	46	MAIN QUAD	R-407D	V	TOP PRESSURE TAP VALVE	TOP #D	SG	16.00	G	Y	M	
5624	D	362	2	46	MAIN QUAD	R-407D	V	TOP PRESSURE TRANSDUCER	TOP #D	SG	16.00	G	Y	M	
5625	D	361	2	46	MAIN QUAD	R-407D	V	TOP PRESSURE TAP VALVE	TOP #D	SG	16.00	G	Y	M	
5626	D	364	2	46	MAIN QUAD	R-407D	V	SUB GAS VALVE	TOP #D	SG	16.00	G	Y	M	
5627	D	772	2	46	MAIN QUAD	R-407-D	V	TOP SOUTH STEAM TAP	TOP #D	LO	57.63	L	N	A	
5628	D	776	2	46	MAIN QUAD	R-407-D	V	TOP LEVEL NORTH PRESSURE TAP	TOP #D	LO	57.63	L	Y	M	
5629	D	006	2	46	MAIN QUAD	R-407D	V	MID LEVEL PRESSURE TAP VALVE	TOP #D	SG	16.00	G	Y	M	
5630	D	756	2	46	MAIN QUAD	R-407-D	V	LOW LEVEL PRESSURE TAP COLD	TOP #D	LO	57.63	L	N	AIU	LO WASH
5631	D	395	2	46	MAIN QUAD	R-407D	VT	RELIEF VALVE	TOP #D	SG	16.00	G	Y	M	
5640	D	352	2	46	MAIN QUAD	R-407C	V	RAW GAS VALVE	TOP #D	SG	16.00	G	Y	M	
5641	D	355	2	46	MAIN QUAD	R-407C	V	DOWN RIVER GAS VALVE	TOP #C	SG	16.00	G	Y	M	
5642	D	365	2	46	MAIN QUAD	R-407C	V	UNDERFIRE GAS VALVE	TOP #C	SG	16.00	G	Y	M	
5643	D	367	2	46	MAIN QUAD	R-407C	V	TOP PRESSURE TRANSDUCER	TOP #C	SG	16.00	G	Y	M	
5644	D	366	2	46	MAIN QUAD	R-407C	V	TOP PRESSURE TAP VALVE	TOP #C	SG	16.00	G	Y	M	
5645	D	368	2	46	MAIN QUAD	R-407C	V	TOP PRESSURE TAP VALVE	TOP #C	SG	16.00	G	Y	M	
5646	D	369	2	46	MAIN QUAD	R-407C	V	SUB GAS VALVE	TOP #C	SG	16.00	G	Y	M	
5647	D	767	2	46	MAIN QUAD	R-407-C	V	TOP LEVEL SOUTH STEAM VALVE	TOP #C	LO	57.63	L	N	A	
5648	D	394	2	46	MAIN QUAD	R-407-C	V	RELIEF VALVE	TOP #C	SG	16.00	G	Y	M	
5649	D	771	2	46	MAIN QUAD	R-407-C	V	TOP LEVEL NORTH PRESSURE TAP	TOP #C	LO	57.63	L	Y	M	
5650	D	007	2	46	MAIN QUAD	R-407-C	V	MID LEVEL PRESSURE TAP VALVE	TOP #C	SG	16.00	G	Y	M	
5651	D	755	2	46	MAIN QUAD	R-407-C	V	LOW LEVEL PRESSURE TAP COLD	TOP #C	LO	57.63	L	N	AIU	LO WASH
5660	D	348	2	46	MAIN QUAD	R-407B	V	RAW GAS VALVE	TOP #B	SG	16.00	G	Y	M	
5661	D	351	2	46	MAIN QUAD	R-407B	V	DOWN RIVER GAS VALVE	TOP #B	SG	16.00	G	Y	M	
5662	D	370	2	46	MAIN QUAD	R-407B	V	UNDERFIRE GAS VALVE	TOP #B	SG	16.00	G	Y	M	
5663	D	371	2	46	MAIN QUAD	R-407B	V	TOP PRESSURE TAP VALVE	TOP #B	SG	16.00	G	Y	M	
5664	D	373	2	46	MAIN QUAD	R-407B	V	TOP PRESSURE TAP VALVE	TOP #B	SG	16.00	G	Y	M	
5665	D	372	2	46	MAIN QUAD	R-407B	PD	TOP PRESSURE TRANSDUCER	TOP #B	SG	16.00	G	Y	M	
5666	D	374	2	46	MAIN QUAD	R-407B	V	SUB GAS VALVE	TOP #B	SG	16.00	G	Y	M	
5667	D	762	2	46	MAIN QUAD	R-407-B	V	TOP LEVEL SOUTH STEAM TAP	TOP #B	LO	57.63	L	N	A	
5668	D	766	2	46	MAIN QUAD	R-407-B	V	TOP LEVEL NORTH PRESSURE TAP	TOP #B	LO	57.63	L	Y	M	
5669	D	008	2	46	MAIN QUAD	R-407C	V	MID LEVEL PRESSURE TAP VALVE	TOP #C	SG	16.00	G	Y	M	
5670	D	754	2	46	MAIN QUAD	R-407-B	V	LOW LEVEL PRESSURE TAP COLD	TOP #B	LO	57.63	L	N	A	LO WASH
5671	D	393	2	46	MAIN QUAD	R-407C	VT	RELIEF VALVE	TOP #C	SG	16.00	G	Y	M	

ED_002508A_00000396-00010

5680	D	344	2	46	MAIN QUAD	R-407A	V	RAW GAS VALVE	TOP #A	SG	16.00	G	Y	M	
5681	D	347	2	46	MAIN QUAD	R-407A	V	DOWN RIVER GAS VALVE	TOP #A	SG	16.00	G	Y	M	
5682	D	375	2	46	MAIN QUAD	R-407A	V	UNDERFIRE GAS VALVE	TOP #A	SG	16.00	G	Y	M	
5683	D	376	2	46	MAIN QUAD	R-407A	V	TOP PRESSURE TAP VALVE	TOP #A	SG	16.00	G	Y	M	
5684	D	378	2	46	MAIN QUAD	R-407A	V	TOP PRESSURE TAP VALVE	TOP #A	SG	16.00	G	Y	M	
5685	D	377	2	46	MAIN QUAD	R-407A	PD	TOP PRESSURE TRANSDUCER	TOP #A	SG	16.00	G	Y	M	
5687	D	757	2	46	MAIN QUAD	R-407-A	V	TOP LEVEL SOUTH STEAM TAP	TOP #A	LO	57.63	G	N	A	
5688	D	392	2	46	MAIN QUAD	R-407D	VT	RELIEF VALVE	TOP #D	SG	16.00	G	Y	M	
5689	D	761	2	46	MAIN QUAD	R-407-A	V	TOP LEVEL NORTH PRESSURE TAP	TOP #A	LO	57.63	L	Y	M	
5690	D	009	2	46	MAIN QUAD	R-407D	V	MID LEVEL PRESSURE TAP VALVE	TOP #D	SG	16.00	G	Y	M	
5691	D	753	2	46	MAIN QUAD	R-407-A	V	LOW LEVEL PRESSURE TAP COLD	TOP #A	LO	57.63	L	N	AIU	LO WASH

TABLE 47
REGISTRATION OF COMPONENTS IN BENZENE SERVICE
LIGHT OIL SEPARATOR AREA

6000	F	370	2	47	WATER SEP	D-573	V	BOTTOM LEVEL CONTROL	GROUND LEVEL	SG	16.00	G	Y	M	
6001	F	377	2	47	WATER SEP	D-573	V	BOTTOM OF SIGHT GLASS	GROUND LEVEL	SG	16.00	G	Y	M	
6002	F	371	2	47	WATER SEP	D-573	V	BOTTOM LEVEL CONTROL STEAM LINE	GROUND LEVEL	SG	16.00	G	Y	M	
6003	F	375	2	47	WATER SEP	D-573	V	BOTTOM SIGHT GLASS	GROUND LEVEL	SG	16.00	G	Y	M	
6004	F	376	2	47	WATER SEP	D-573	V	BOTTOM SIGHT GLASS DRAIN	GROUND LEVEL	SG	16.00	G	Y	M	
6005	F	378	2	47	LO SEP	5730-B	V	CONTROL STATION DUMP LINE	GROUND LEVEL	LO	57.63	G	Y	M	
6006	F	379	2	47	LO SEP	5730-B	V	CONTROL VALVE DUMP LINE	GROUND LEVEL	LO	57.63	G	Y	M	NEW 4-93
6007	F	380	2	47	LO SEP	5730-B	V	CONTROL STATION DUMP LINE	GROUND LEVEL	LO	57.63	G	Y	M	NEW 7/93
6008			2	47	LO SEP	5730-B	V	CONTROL STATION DUMP BLOCK VALVE	GROUND LEVEL	LO	57.63	G	Y	M	NEW 12/95
6009	F	386	2	47	LO SEP	5730-B	V	DUMP VALVE BYPASS	GROUND LEVEL	LO	57.63	G	Y	M	NEW 4-93
6010	F	381	2	47	LO SEP	5730-B	V	CONTROL STATION DUMP LINE BYPASS	GROUND LEVEL	LO	57.63	G	Y	M	NEW 7/93
6011	F	388	2	47	LO SEP	D-573	V	CONTAMINATED WATER LINE DRAIN	GROUND LEVEL	W	LOW	L	Y	N/A	NEW 4-93
6012	F	382	2	47	LO SEP	D-573	V	CONTAMINATED WATER LINE DRAIN	GROUND LEVEL	W	LOW	L	Y	N/A	NEW 7/93
6013	F	383	2	47	LO SEP	D-573	V	INJECTION WATER LINE	GROUND LEVEL	W	LOW	L	Y	N/A	NEW 7/93
6014	F	372	2	47	LO SEP	D-573	V	INJECTION WATER LINE DRAIN	GROUND LEVEL	W	LOW	L	Y	N/A	
6015	F	387	2	47	LO SEP	D-573	V	CONTAMINATED WATER LINE DRAIN	GROUND LEVEL	W	LOW	L	Y	N/A	NEW 4-93
6016	F	384	2	47	LO SEP	D-573	V	CONTAMINATED WATER LINES	GROUND LEVEL	W	LOW	L	Y	N/A	NEW 4-93
6017			2	47	LO SEP	D-573	V	CONTAMINATED WATER LINES DRAIN	GROUND LEVEL	W	LOW	L	Y	N/A	NEW 12/95
6018	F	385	2	47	LO SEP	D-573	V	CONTAMINATED WATER LINES	GROUND LEVEL	W	LOW	L	Y	N/A	NEW 4-93
6019			2	47	LO SEP	D-573	V	CONTAMINATED WATER LINES DRAIN	GROUND LEVEL	W	LOW	L	Y	N/A	NEW 12/95
6020			2	47	LO SEP	D-573	V	CONTAMINATED WATER LINES	GROUND LEVEL	W	LOW	L	Y	N/A	NEW 12/95
6030	F	278	2	47	WATER SEP	D-573	V	LEVEL CONTROL TOP VALVE	SECOND LEVEL	LOW	57.63	L	Y	M	
6031	F	274	2	47	WATER SEP	D-573	V	SIGHT GLASS/ LEVEL CONTROL TOP VALVE	SECOND LEVEL	LOW	57.63	L	Y	M	
6032	F	275	2	47	WATER SEP	D-573	V	SIGHT GLASS/ LEVEL CONTROL TOP DRAIN	SECOND LEVEL	LOW	57.63	L	Y	M	
6033	F374		2	47	WATER SEP		G	WATER SEPARATOR PRESSURE GAUGE	SECOND LEVEL	LOW	57.63	L	Y	M	NEW 12/95
6034	F373		2	47	WATER SEP		V	WATER SEPARATOR PRESSURE TAP VALVE	SECOND LEVEL	LOW	57.63	L	Y	M	NEW 12/95
6040	F	281	2	47	WATER SEP	D-573	V	BLOCKING VALVE SUB GAS BY PASS	LEVEL 2A	SG	16.00	G	Y	M	
6041	F	282	2	47	WATER SEP	D-573	V	SUB GAS OUT BLOCKING VALVE	LEVEL 2A	SG	16.00	G	Y	M	
6042	F	280	2	47	WATER SEP	D-573	V	CLEAN OUT VALVES SUB GAS OUT	LEVEL 2A	SG	16.00	G	Y	M	
6043	F	279	2	47	WATER SEP	D-573	V	CLEAN OUT VALVES SUB GAS OUT	LEVEL 2A	SG	16.00	G	Y	M	
6044	F	278	2	47	WATER SEP	D-573	V	CLEAN OUT VALVES SUB GAS OUT	LEVEL 2A	SG	16.00	G	Y	M	
6045	F	283	2	47	WATER SEP	D-573	V	CLEAN OUT VALVES SUB GAS OUT	LEVEL 2A	SG	16.00	G	Y	M	
6046	F	411	2	47	WATER SEP	D-573	V	BLOCKING VALVE FOR NEW RELIEF	LEVEL 2A	SG	16.00	G	Y	M	NEW 4-93
6047	F	412	2	47	WATER SEP	D-573	V	NEW RELIEF VALVE	LEVEL 2A	SG	16.00	G	Y	M	NEW 4-93
6048	F277		2	47	WATER SEP	D-573	V	RELIEF VALVE SUB GAS OUT	LEVEL 2A	SG	16.00	G	Y	M	NEW 12-95
6049	F	273	2	47	WATER SEP	D-573	V	RELIEF VALVE SUB GAS INLET	LEVEL 2A	SG	16.00	G	Y	M	
6050	F	271	2	47	WATER SEP	D-573	V	SUB GAS INLET PRESSURE TAP VALVE	LEVEL 2A	SG	16.00	G	N	A	
6051	F	272	2	47	WATER SEP	D-573	G	PRESURE GAUGE SUB GAS INLET	LEVEL 2A	SG	16.00	G	N	A	

ED_002508A_00000396-00012

TABLE 48
REGISTRATION OF COMPONENTS IN BENZENE SERVICE
SUB GAS COOLERS

6100	F	277	2	48	SEPARATER	D-573	V	INLET MANIFOLD DRAIN	ENTRY END	SG	16.00	G	N	A	NEW 6-93
6101			2	48	SEPARATER	D-573	V	COOLER INLET MANIFOLD BLOCKING VALVE	ENTRY END	SG	16.00	G	N	A	NEW 12-95
6102	E	245	2	48	SEPARATER	D-573	V	INLET BLOCKING VALVE	ENTRY END	SG	16.00	G	Y	M	
6103	E	246	2	48	COOLER	E-630	V	INLET CLEANOUT VALVE	ENTRY END	SG	16.00	G	Y	M	
6104	E	247	2	48	COOLER	E-630	V	INLET CLEANOUT VALVE	ENTRY END	SG	16.00	G	Y	M	
6105	E	240	2	48	COOLER	E-629	V	INLET MANIFOLD PRESSURE TAP VALVE	ENTRY END	SG	16.00	G	Y	M	
6106			2	48	COOLER	E-629	G	INLET MANIFOLD PRESSURE GAUGE	ENTRY END	SG	16.00	G	N	A	
6107	E	241	2	48	COOLER	E-629	V	INLET BLOCKING VALVE	ENTRY END	SG	16.00	G	Y	M	
6108	E	243	2	48	COOLER	E-629	V	INLET CLEANOUT VALVE	ENTRY END	SG	16.00	G	Y	M	
6109	E	242	2	48	COOLER	E-629	V	INLET CLEANOUT VALVE	ENTRY END	SG	16.00	G	Y	M	
6110	E	244	2	48	COOLER	E-629	V	INLET COOLER CLEANOUT VALVE	ENTRY END	SG	16.00	G	Y	M	
6111	E	248	2	48	COOLER	E-630	V	INLET COOLER CLEANOUT VALVE	ENTRY END	SG	16.00	G	Y	M	
6115	E	249	2	48	COOLER	E-632	V	INLET BLOCKING VALVE	ENTRY END	SG	16.00	G	Y	M	
6116	E	251	2	48	COOLER	E-632	V	INLET PRESSURE GAUGE	ENTRY END	SG	16.00	G	Y	M	
6117	E	250	2	48	COOLER	E-632	V	INLET CLEANOUT VALVE	ENTRY END	SG	16.00	G	Y	M	
6118			2	48	SEPARATOR	D-573	V	COOLET INLET MANIFOLD BLOCKING VALVE	ENTRY END	SG	16.00	G	N	A	NEW 12-95
6119			2	48	SEPARATOR	D-573	V	COOLET INLET MANIFOLD DRAIN	ENTRY END	SG	16.00	G	N	A	NEW 12-95
6120	E	253	2	48	COOLER	E-633	V	INLET BLOCKING VALVE	ENTRY END	SG	16.00	G	Y	M	
6121	E	255	2	48	COOLER	E-633	V	INLET CLEANOUT VALVE	ENTRY END	SG	16.00	G	Y	M	
6122	E	254	2	48	COOLER	E-633	V	INLET CLEANOUT VALVE	ENTRY END	SG	16.00	G	Y	M	
6123	E	252	2	48	COOLER	E-632	V	INLET COOLER CLEANOUT VALVE	ENTRY END	SG	16.00	G	Y	M	
6124	E	256	2	48	COOLER	E-633	V	INLET COOLER CLEANOUT VALVE	ENTRY END	SG	16.00	G	Y	M	
6125			2	48	COOLER	E-633	V	INLET END RELIEF VALVE	ENTRY END	SG	16.00	G	Y	M	
6126			2	48	COOLER	E-629	V	INLET END RELIEF VALVE	ENTRY END	SG	16.00	G	Y	M	NEW 12-95
6127			2	48	COOLER	E-632	V	INLET MANIFOLD PRESSURE TAP VALVE	ENTRY END	SG	16.00	G	Y	M	NEW 12-95
6131	E	306	2	48	COOLER	E-629	V	OUTLET CLEANOUT VALVE	DISCHRG END	SG	16.00	G	Y	M	
6132	E	307	2	48	COOLER	E-629	V	OUTLET CLEANOUT VALVE	DISCHRG END	SG	16.00	G	Y	M	
6133	F	149	2	48	COOLER	E-629	V	OUTLET BLOCKING VALVE	DISCHRG END	SG	16.00	G	N	A	
6134	E	036	2	48	COOLER	E-629	V	OUTLET COOLER CLEANOUT VALVE	DISCHRG END	SG	16.00	G	N	A	
6135	E	310	2	48	COOLER	E-630	V	OUTLET COOLER CLEANOUT	DISCHRG END	SG	16.00	G	Y	M	
6136	E	304	2	48	COOLER	E-630	V	OUTLET CLEANOUT VALVE	DISCHRG END	SG	16.00	G	Y	M	
6137	E	305	2	48	COOLER	E-630	V	OUTLET CLEANOUT VALVE	DISCHRG END	SG	16.00	G	Y	M	
6138	F	148	2	48	COOLER	E-630	V	OUTLET BLOCKING VALVE	DISCHRG END	SG	16.00	G	N	A	
6145	E	308	2	48	COOLER	E-632	V	OUTLET COOLER CLEANOUT VALVE	DISCHRG END	SG	16.00	G	Y	M	
6146	E	302	2	48	COOLER	E-632	V	OUTLET CLEANOUT VALVE	DISCHRG END	SG	16.00	G	Y	M	
6147	E	303	2	48	COOLER	E-632	V	OUTLET CLEANOUT VALVE	DISCHRG END	SG	16.00	G	Y	M	
6148	F	147	2	48	COOLER	E-632	V	OUTLET BLOCKING VALVE	DISCHRG END	SG	16.00	G	N	A	NEW 6-93
6149			2	48	COOLER	E-633	V	OUTLET COOLER PRESSURE GAUGE	DISCHRG END	SG	16.00	G	Y	M	
6150	E	309	2	48	COOLER	E-633	V	OUTLET COOLER PRESSURE TAP VALVE	DISCHRG END	SG	16.00	G	Y	M	
6151	F	146	2	48	COOLER	E-633	V	OUTLET BLOCKING VALVE	DISCHRG END	SG	16.00	G	N	A	NEW 6-93
6152	E	301	2	48	COOLER	E-633	V	OUTLET CLEANOUT VALVE	DISCHRG END	SG	16.00	G	Y	M	

ED_002508A_00000396-00013

TABLE 49
REGISTRATION OF COMPONENTS IN BENZENE SERVICE
SUB GAS WATER SEPARATOR

6200	F	144	2	49	SEPARATOR	D-575	V	DRAIN TO DECANTERS CONTROL STATION VALVE	GROUND LEVEL	LOW	57.63	G	Y	M	
6201	F	143	2	49	SEPARATOR	D-575	V	DRAIN TO DECANTERS CONTROL STATION VALVE	GROUND LEVEL	LOW	57.63	G	Y	M	
6202	F	142	2	49	SEPARATOR	D-575	V	DRAIN TO DECANTERS CONTROL STATION VALVE	GROUND LEVEL	LOW	57.63	G	Y	M	
6203	F	141	2	49	SEPARATOR	D-575	V	DRAIN TO DECANTERS CONTROL STATION VALVE	GROUND LEVEL	LOW	57.63	G	Y	M	
6204	F	140	2	49	SEPARATOR	D-575	V	DRAIN TO DECANTERS CONTROL STATION VALVE	GROUND LEVEL	LOW	57.63	G	Y	M	
6205	F	145	2	49	SEPARATOR	D-575	V	DRAIN TO DECANTERS CONTROL STATION VALVE	GROUND LEVEL	LOW	57.63	G	Y	M	
6206	F	139	2	49	SEPARATOR	D-575	V	DRAIN TO DECANTERS CONTROL STATION VALVE	GROUND LEVEL	LOW	57.63	G	Y	M	
6207	F	130	2	49	SEPARATOR	D-575	V	BOTTOM DRAIN	GROUND LEVEL	LOW	57.63	G	Y	M	
6210	F	133	2	49	SEPARATOR	D-575	V	LEVEL CONTROL BOTTOM VALVE	GROUND LEVEL	LOW	57.63	G	Y	M	
6211	F	131	2	49	SEPARATOR	D-575	V	LEVEL CONTROL BOTTOM VALVE	GROUND LEVEL	LOW	57.63	G	Y	M	
6212	F	134	2	49	SEPARATOR	D-575	V	TOP VALVE LEVEL CONTROL	GROUND LEVEL	LOW	57.63	G	N	A	
6213	F	135	2	49	SEPARATOR	D-575	V	TOP VALVE LEVEL CONTROL	GROUND LEVEL	LOW	57.63	G	N	A	
6214	F	136	2	49	SEPARATOR	D-575	V	TOP VALVE SIGHT GLASS/ LEVEL CONTROL	GROUND LEVEL	LOW	57.63	G	N	A	
6215	F	137	2	49	SEPARATOR	D-575	V	TOP VALVE SIGHT GLASS/ LEVEL CONTROL	GROUND LEVEL	LOW	57.63	G	N	A	
6216	F	138	2	49	SEPARATOR	D-575	V	TOP VALVE SIGHT GLASS/ LEVEL CONTROL	GROUND LEVEL	LOW	57.63	G	N	A	
6217	F	119	2	49	SEPARATOR	D-575	SG	SIGHT GLASS	GROUND LEVEL	LOW	57.63	G	Y	M	NEW 6-93
6218	f395		2	49	SEPARATOR	D-575	V	SIGHT GLASS DRAIN	GROUND LEVEL	LOW	57.63	G	Y	M	NEW 12-95
6219	f396		2	49	SEPARATOR	D-575	V	SIGHT GLASS DRAIN	GROUND LEVEL	LOW	57.63	G	Y	M	NEW 12-95
6220	f397		2	49	SEPARATOR	D-575	V	SIGHT GLASS DRAIN	GROUND LEVEL	LOW	57.63	G	Y	M	NEW 12-95
6221	f398		2	49	SEPARATOR	D-575	V	SIGHT GLASS DRAIN	GROUND LEVEL	LOW	57.63	G	Y	M	NEW 12-95
6222	F	132	2	49	SEPARATOR	D-575	V	SIGHT GLASS BOTTOM VALVE	GROUND LEVEL	LOW	57.63	G	Y	M	
6230	F	399	2	49	SEPARATOR	D-575	V	TOP CLEANOUT VALVE	TOP OF UNIT	SG	16.00	G	Y	M	
6231	F	400	2	49	SEPARATOR	D-575	V	BYPASS VALVE TO D 576	TOP OF UNIT	SG	16.00	G	Y	M	
6232	F	403	2	49	SEPARATOR	D-575	V	RELIEF BLOCKING VALVE	TOP OF UNIT	SG	16.00	G	Y	M	
6233	F	404	2	49	SEPARATOR	D-575	V	RELIEF VALVE	TOP OF UNIT	SG	16.00	G	Y	M	
6234	F	402	2	49	SEPARATOR	D-575	V	OUTLET CLEANOUT VALVE	TOP OF UNIT	SG	16.00	G	Y	M	
6235	F	401	2	49	SEPARATOR	D-575	V	RELIEF VALVE	TOP OF UNIT	SG	16.00	G	Y	M	

ED_002508A_00000396-00014

TABLE 50
REGISTRATION OF COMPONENTS IN BENZENE SERVICE
SUB GAS AMMONIA COOLERS

6300	E	212	2	50	COOLER	E-635	V	INLET BLOCKING VALVE	ENTRY END	SG	16.00	G	Y	M	
6301	E	213	2	50	COOLER	E-635	V	INLET CLEANOUT VALVE	ENTRY END	SG	16.00	G	Y	M	
6302			2	50	COOLER	E-635	V	INLET CLEANOUT VALVE	ENTRY END	SG	16.00	G	Y	M	NEW 12-95
6303			2	50	COOLER	E-635	V	INLET CLEANOUT VALVE	ENTRY END	SG	16.00	G	Y	M	NEW 12-95
6304	E	218	2	50	COOLER	E-637	V	INLET CLEANOUT VALVE	ENTRY END	SG	16.00	G	Y	M	
6305			2	50	COOLER	E-637	V	INLET CLEANOUT VALVE	ENTRY END	SG	16.00	G	Y	M	NEW 12-95
6306	E	219	2	50	COOLER	E-638	V	INLET BLOCKING VALVE	ENTRY END	SG	16.00	G	Y	M	
6307	E	220	2	50	COOLER	E-638	V	INLET CLEANOUT VALVE	ENTRY END	SG	16.00	G	Y	M	
6308	E	221	2	50	COOLER	E-638	V	OUTLET CLEANOUT VALVE	DISCHRG END	SG	16.00	G	Y	M	
6309	E	222	2	50	COOLER	E-638	V	OUTLET BLOCKING VALVE	DISCHRG END	SG	16.00	G	Y	M	
6310	E	217	2	50	COOLER	E-637	V	OUTLET CLEANOUT VALVE	DISCHRG END	SG	16.00	G	Y	M	
6311			2	50	COOLER	E-637	V	OUTLET CLEANOUT VALVE	DISCHRG END	SG	16.00	G	Y	M	NEW 12-95
6312	E	214	2	50	COOLER	E-635	V	OUTLET BLOCKING VALVE	DISCHRG END	SG	16.00	G	Y	M	
6313	E	215	2	50	COOLER	E-635	V	OUTLET CLEANOUT VALVE	DISCHRG END	SG	16.00	G	Y	M	

ED_002508A_00000396-00015

TABLE 51
REGISTRATION OF COMPONENTS IN BENZENE SERVICE
SUB SUB GAS AMMONIA COOLER SEPARATOR

6400	F	168	2	51	SEPARATOR	D-576		BOTTOM DRAIN	GROUND LEVEL	LOW	57.63	L	Y	M	
6401			2	51	SEPARATOR	D-576		BOTTOM CLEANOUT	GROUND LEVEL	LOW	57.63	L	Y	M	ADDED 12-95
6402	F	169	2	51	SEPARATOR	D-576		FEED LINE TO DECANTER	GROUND LEVEL	LOW	57.63	L	Y	M	
6403	F	170	2	51	SEPARATOR	D-576		FEED LINE TO DECANTER	GROUND LEVEL	LOW	57.63	L	Y	M	
6404	F	172	2	51	SEPARATOR	D-576		FEED LINE TO DECANTER	GROUND LEVEL	LOW	57.63	L	Y	M	
6405	F	175	2	51	SEPARATOR	D-576		FEED LINE TO DECANTER	GROUND LEVEL	LOW	57.63	L	Y	M	
6406	F	054	2	51	SEPARATOR	D-576		FEED LINE TO DECANTER	GROUND LEVEL	LOW	57.63	L	Y	M	
6407	F	056	2	51	SEPARATOR	D-576		FEED LINE TO DECANTER	GROUND LEVEL	LOW	57.63	L	Y	M	
6408	F	055	2	51	SEPARATOR	D-576		FEED LINE TO DECANTER	GROUND LEVEL	LOW	57.63	L	Y	M	
6409	F	174	2	51	SEPARATOR	D-576		FEED LINE TO DECANTER	GROUND LEVEL	LOW	57.63	L	Y	M	
6410	F	173	2	51	SEPARATOR	D-576		FEED LINE TO DECANTER	GROUND LEVEL	LOW	57.63	L	Y	M	
6411	F	166	2	51	SEPARATOR	D-576		BOTTOM SIGHT GLASS	GROUND LEVEL	LOW	57.63	L	Y	M	
6412	F	165	2	51	SEPARATOR	D-576		BOTTOM SIGHT GLASS	GROUND LEVEL	LOW	57.63	L	Y	M	
6413	F	167	2	51	SEPARATOR	D-576		SIGHTGLASS/LEVEL CONTROL VALVE	GROUND LEVEL	LOW	57.63	L	Y	M	
6414	F	152	2	51	SEPARATOR	D-576		SIGHTGLASS/LEVEL CONTROL VALVE TOP	12 FEET UP	SG	16.00	G	N	A	
6415	F	151	2	51	SEPARATOR	D-576		SIGHTGLASS/LEVEL CONTROL VALVE TOP	12 FEET UP	SG	16.00	G	N	A	
6416	F	150	2	51	SEPARATOR	D-576		SIGHTGLASS/LEVEL CONTROL VALVE TOP	12 FEET UP	SG	16.00	G	N	A	
6417	F	158	2	51	SEPARATOR	D-576		SIGHTGLASS/LEVEL CONTROL VALVE	GROUND LEVEL	LOW	57.63	L	Y	M	
6418	F	164	2	51	SEPARATOR	D-576		BOTTOM SIGHT GLASS DRAIN	GROUND LEVEL	LOW	57.63	L	Y	M	
6419	F	052	2	51	SEPARATOR	D-576		SIGHTGLASS/LEVEL CONTROL VALVE	GROUND LEVEL	LOW	57.63	L	Y	M	
6420	F	053	2	51	SEPARATOR	D-576		SIGHTGLASS/LEVEL CONTROL VALVE	GROUND LEVEL	LOW	57.63	L	Y	M	
6421	F	051	2	51	SEPARATOR	D-576		SIGHTGLASS/LEVEL CONTROL VALVE	GROUND LEVEL	LOW	57.63	L	Y	M	
6422	F	156	2	51	SEPARATOR	D-576		SIGHTGLASS/LEVEL CONTROL VALVE	GROUND LEVEL	LOW	57.63	L	Y	M	
6423	F	155	2	51	SEPARATOR	D-576		SIGHTGLASS/LEVEL CONTROL VALVE	GROUND LEVEL	LOW	57.63	L	Y	M	
6424	F	153	2	51	SEPARATOR	D-576		LEVEL CONTROL VALVE TOP	12 FEET UP	SG	16.00	G	N	A	
6425	F	329	2	51	SEPARATOR	D-576		LEVEL CONTROL	GROUND LEVEL	SG	16.00	G	Y	M	
6426	F	050	2	51	SEPARATOR	D-576		SIGHTGLASS/LEVEL CONTROL VALVE	GROUND LEVEL	LOW	57.63	L	Y	M	
6429	F	290	2	51	SEPARATOR	D-576		SUB SUB GAS RECYCLE	10' UP, 12' OUT	SG	16.00	G	N	A	
6430	F	286	2	51	SEPARATOR	D-576		SUB GAS INLET VALVE	SECOND LEVEL	SG	16.00	G	Y	M	
6431	F	287	2	51	SEPARATOR	D-576		CLEANOUT VALVE FOR SUB GAS INLET	SECOND LEVEL	SG	16.00	G	Y	M	
6432	F	163	2	51	SEPARATOR	D-576		INLET D576 PRESSURE TAP VALVE	SECOND LEVEL	LOW	57.63	L	Y	M	
6433	F	162	2	51	SEPARATOR	D-576		INLET PRESSURE TAP THREEVALVE BLOCK	SECOND LEVEL	LOW	57.63	L	Y	M	
6434	F	315	2	51	SEPARATOR	D-576		NEW RELIEF VALVE BLOCKING VALVE	SECOND LEVEL	SG	16.00	G	Y	M	
6435	F	316	2	51	SEPARATOR	D-576		NEW RELIEF VALVE	THIRD LEVEL	SG	16.00	G	Y	M	
6436	F	289	2	51	SEPARATOR	D-576		SUB GAS OUTLET VALVE	10' UP, 12' OUT	SG	16.00	G	N	A	
6437	F	288	2	51	SEPARATOR	D-576		D-576 BYPASS VALVE	SECOND LEVEL	SG	16.00	G	Y	M	
6438	F	291	2	51	SEPARATOR	D-576		SUB GAS OUT CLEANOUT VALVE	10' UP, 12' OUT	SG	16.00	G	N	A	
6439	F	334	2	51	SEPARATOR	D-576	V	SUB GAS COOLERS BYPASS	10' UP, 12' OUT	SG	16.00	G	N	A	
6440	F	292	2	51	SEPARATOR	D-576		RELIEF VALVE	THIRD LEVEL	SG	16.00	G	Y	M	
6450	F	333	2	51	SEPARATOR	D-576	V	SUB GAS COOLERS BYPASS	THIRD LEVEL	SG	16.00	G	Y	M	
6451	F	332	2	51	SEPARATOR	D-576	V	SUB GAS COOLERS BYPASS	THIRD LEVEL	SG	16.00	G	Y	M	
6452	F	331	2	51	SEPARATOR	D-576	V	SUB GAS COOLERS BYPASS	THIRD LEVEL	SG	16.00	G	Y	M	
6453	F	294	2	51	SEPARATOR	D-576		SUB GAS SPLITTER DRAIN	THIRD LEVEL	SG	16.00	G	Y	M	
6454	F	293	2	51	SEPARATOR	D-576		SUB GAS SPLITTER DRAIN	THIRD LEVEL	SG	16.00	G	Y	M	
6455	F	335	2	51	SEPARATOR	D-576	V	SUB GAS SPLITTER VALVE	THIRD LEVEL	SG	16.00	G	Y	M	
6456	F	336	2	51	SEPARATOR	D-576	V	SUB GAS SPLITTER VALVE	THIRD LEVEL	SG	16.00	G	Y	M	
6457	F	337	2	51	SEPARATOR	D-576	V	SUB GAS SPLITTER VALVE	THIRD LEVEL	SG	16.00	G	Y	M	
6458	F	341	2	51	SEPARATOR	D-576	V	SUB GAS SPLITTER VALVE	10' UP	SG	16.00	G	N	A	
6459	F	338	2	51	SEPARATOR	D-576	V	SUB GAS SPLITTER VALVE	THIRD LEVEL	SG	16.00	G	Y	M	
6460	F	339	2	51	SEPARATOR	D-576	V	SUB GAS SPLITTER VALVE	THIRD LEVEL	SG	16.00	G	Y	M	
6461	F	340	2	51	SEPARATOR	D-576	V	SUB GAS SPLITTER VALVE	THIRD LEVEL	SG	16.00	G	Y	M	

ED_002508A_00000396-00016

TABLE 52
REGISTRATION OF COMPONENTS IN BENZENE SERVICE
VACUUM MACHINE HEADERS

6500	C	247	2	52	VALVE	V	VAC MACHINE INLET MANIFOLD	IN INACCESSIBL	SG	16.00	GV	N	N/A	ABOUT 15 FT ABOVE GROUND
6501	C	248	2	52	VALVE	V	VAC MACHINE INLET MANIFOLD	IN INACCESSIBL	SG	16.00	GV	N	N/A	ABOUT 15 FT ABOVE GROUND
6502	C	249	2	52	VALVE	V	VAC MACHINE INLET MANIFOLD	IN INACCESSIBL	SG	16.00	GV	N	N/A	ABOUT 15 FT ABOVE GROUND
6503	C	250	2	52	VALVE	V	VAC MACHINE INLET MANIFOLD	IN INACCESSIBL	SG	16.00	GV	N	N/A	ABOUT 15 FT ABOVE GROUND
6504	C	251	2	52	VALVE	V	VAC MACHINE INLET MANIFOLD	IN INACCESSIBL	SG	16.00	GV	N	N/A	ABOUT 15 FT ABOVE GROUND
6505	C	252	2	52	VALVE	V	VAC MACHINE INLET MANIFOLD	IN INACCESSIBL	SG	16.00	GV	N	N/A	ABOUT 15 FT ABOVE GROUND
6510	C	236	2	52	VALVE	V	VAC MACHINE EXHAUST MANIFOLD	OUT INACCESSI	SG	16.00	G	N	A	ABOUT 15 FT ABOVE GROUND
6511	C	238	2	52	VALVE	V	VAC MACHINE EXHAUST MANIFOLD	OUT INACCESSI	SG	16.00	G	N	A	ABOUT 15 FT ABOVE GROUND
6512	C	240	2	52	VALVE	V	VAC MACHINE EXHAUST MANIFOLD	OUT INACCESSI	SG	16.00	G	N	A	ABOUT 15 FT ABOVE GROUND
6513	C	242	2	52	VALVE	V	VAC MACHINE EXHAUST MANIFOLD	OUT INACCESSI	SG	16.00	G	N	A	ABOUT 15 FT ABOVE GROUND
6514	C	244	2	52	VALVE	V	VAC MACHINE EXHAUST MANIFOLD	OUT INACCESSI	SG	16.00	G	N	A	ABOUT 15 FT ABOVE GROUND
6515	C	235	2	52	VALVE	V	VAC MACHINE EXHAUST MANIFOLD	OUT INACCESSI	SG	16.00	G	N	A	ABOUT 15 FT ABOVE GROUND
6516	C	237	2	52	VALVE	V	VAC MACHINE EXHAUST MANIFOLD	OUT INACCESSI	SG	16.00	G	N	A	ABOUT 15 FT ABOVE GROUND
6517	C	239	2	52	VALVE	V	VAC MACHINE EXHAUST MANIFOLD	OUT INACCESSI	SG	16.00	G	N	A	ABOUT 15 FT ABOVE GROUND
6518	C	241	2	52	VALVE	V	VAC MACHINE EXHAUST MANIFOLD	OUT INACCESSI	SG	16.00	G	N	A	ABOUT 15 FT ABOVE GROUND
6519	C	243	2	52	VALVE	V	VAC MACHINE EXHAUST MANIFOLD	OUT INACCESSI	SG	16.00	G	N	A	ABOUT 15 FT ABOVE GROUND
6520	C	245	2	52	VALVE	V	VAC MACHINE EXHAUST MANIFOLD	OUT INACCESSI	SG	16.00	G	N	A	ABOUT 15 FT ABOVE GROUND

TABLE 53
REGISTRATION OF COMPONENTS IN BENZENE SERVICE
LIGHT OIL REGENERATOR R-582

6600	E	147	2	53	LO REGEN	R-582	V	LO WASH SYSTEM VALVE	GROUND LEVEL	LOM	57.63	L	N	AIU	LO WASH
6601	E	154	2	53	LO REGEN	R-582	V	LO WASH SYSTEM VALVE	GROUND LEVEL	LOM	57.63	L	Y	MIU	LO WASH
6602	E	157	2	53	LO REGEN	R-582	V	LO WASH SYSTEM VALVE	GROUND LEVEL	LOM	57.63	L	Y	MIU	LO WASH
6603	E	156	2	53	LO REGEN	R-582	V	LO WASH SYSTEM VALVE	GROUND LEVEL	LOM	57.63	L	Y	MIU	LO WASH
6604	E	155	2	53	LO REGEN	R-582	V	LO WASH SYSTEM VALVE	GROUND LEVEL	LOM	57.63	L	Y	MIU	LO WASH
6605			2	53	LO REGEN	R-582	V	LO WASH SYSTEM VALVE	GROUND LEVEL	LOM	57.63	L	Y	MIU	LO WASH, ADDED 12-95
6606			2	53	LO REGEN	R-582	V	LO WASH SYSTEM VALVE	GROUND LEVEL	LOM	57.63	L	N	AIU	LO WASH, ADDED 12-95
6607			2	53	LO REGEN	R-582	V	LO WASH SYSTEM VALVE	GROUND LEVEL	LOM	57.63	L	Y	MIU	LO WASH, ADDED 12-95
6608			2	53	LO REGEN	R-582	V	LO WASH SYSTEM VALVE	GROUND LEVEL	LOM	57.63	L	Y	MIU	LO WASH, ADDED 12-95
6609	E	150	2	53	LO REGEN	R-582	V	LO WASH SYSTEM VALVE	GROUND LEVEL	LOM	57.63	L	Y	MIU	LO WASH
6610			2	53	LO REGEN	R-582	V	LO WASH SYSTEM VALVE	GROUND LEVEL	LOM	57.63	L	Y	MIU	LO WASH, ADDED 12-95
6611			2	53	LO REGEN	R-582	V	LO WASH SYSTEM VALVE	GROUND LEVEL	LOM	57.63	L	Y	MIU	LO WASH, ADDED 12-95
6612	E	151	2	53	LO REGEN	R-582	V	LO WASH SYSTEM VALVE	GROUND LEVEL	LOM	57.63	L	Y	MIU	LO WASH
6613			2	53	LO REGEN	R-582	V	LO WASH SYSTEM VALVE	GROUND LEVEL	LOM	57.63	L	Y	MIU	LO WASH, ADDED 12-95
6614	E	152	2	53	LO REGEN	R-582	V	LO WASH SYSTEM VALVE	GROUND LEVEL	LOM	57.63	L	Y	MIU	LO WASH
6620	E	069	2	53	LO REGEN	R-582	V	LO WASH SYSTEM VALVE	UPPER MID LEV	LOM	57.63	L	Y	MIU	LO WASH
6621	E	070	2	53	LO REGEN	R-582	V	LO WASH SYSTEM VALVE	UPPER MID LEV	LOM	57.63	L	Y	MIU	LO WASH
6622	E	071	2	53	LO REGEN	R-582	V	LO WASH SYSTEM VALVE	UPPER MID LEV	LOM	57.63	L	Y	MIU	LO WASH
6623	E72		2	53	LO REGEN	R-582	V	LO WASH SYSTEM CLEANOUT VALVE	UPPER MID LEV	LOM	57.63	L	Y	MIU	LO WASH, ADDED 12-95
6624	E	073	2	53	LO REGEN	R-582	V	LO WASH SYSTEM VALVE	UPPER MID LEV	LOM	57.63	L	Y	MIU	LO WASH
6630	E	047	2	53	LO REGEN	R-582	V	SUB SUB GAS OUTLET VALVE	TOP TO MID	SSG	15.00	G	Y	M	ADDED 4/93
6631			2	53	LO REGEN	R-582	V	SUB SUB GAS OUTLET VALVE	UPMID SUB SUB	SSG	15.00	G	Y	M	ADDED 12-95
6632			2	53	LO REGEN	R-582	G	SUB SUB GAS PRESSURE GAUGE	UPMID SUB SUB	SSG	15.00	G	Y	M	ADDED 12-95
6633	E	062	2	53	LO REGEN	R-582	V	SUB SUB GAS VALVE	UPMID SUB SUB	SSG	15.00	G	Y	M	
6634	E	063	2	53	LO REGEN	R-582	V	SUB SUB GAS BLOCKING VALVE	UPMID SUB SUB	SSG	15.00	G	Y	M	
6640	E	091	2	53	LO REGEN	R-582	V	DIFFERENTIAL PRESSURE TAP VALVES	TOP LEVEL	LO	57.63	L	N	A	
6641	E	132	2	53	LO REGEN	R-582	V	DIFFERENTIAL PRESSURE TAP VALVE	TOP LEVEL	LO	57.63	L	Y	M	
6642			2	53	LO REGEN	R-582	V	DIFFERENTIAL PRESSURE TAP VALVE	TOP LEVEL	LO	57.63	L	Y	M	ADDED 12-95
6643			2	53	LO REGEN	R-582	DP	DP TRANSDUCER	TOP LEVEL	LO	57.63	L	Y	M	ADDED 12-95
6644	E	125	2	53	LO REGEN	R-582	V	DIFFERENTIAL PRESSURE TAP VALVE	TOP LEVEL	LO	57.63	L	Y	M	
6645	E	134	2	53	LO REGEN	R-582	V	DIFFERENTIAL PRESSURE TAP VALVE	TOP LEVEL	LO	57.63	L	Y	M	
6650	E	048	2	53	LO REGEN	R-582	V	SUB GAS INLET VALVE	TOP TO MID	SG	16.00	G	Y	M	ADDED 4/93
6651	E	068	2	53	LO REGEN	R-582	V	DERIMING GAS VALVE	UPMID SUB IN	SG	16.00	G	Y	M	
6652	E	066	2	53	LO REGEN	R-582	V	SUB GAS CLEANOUT VALVE	UPMID SUB IN	SG	16.00	G	Y	M	
6653	E	065	2	53	LO REGEN	R-582	V	SUB GAS CLEANOUT VALVE	UPMID SUB IN	SG	16.00	G	Y	M	
6654			2	53	LO REGEN	R-582	G	SUB GAS PRESSURE GAUGE	UPMID SUB IN	SG	16.00	G	Y	M	ADDED 12-95
6655	E	064	2	53	LO REGEN	R-582	V	LOADING VALVE V 504A2	UPMID SUB IN	SG	16.00	G	Y	M	
6660	E	046	2	53	LO REGEN	R-582	V	CLEAN SUB GAS OUTLET VALVE	TOP TO MID	CSG	0.32	G	Y	N/A	LOW BENZENE, ADDED 4/93
6661			2	53	LO REGEN	R-582	V	CLEAN SUB GAS OUTLET VALVE	UPMID CARB LN	CSG	0.32	G	Y	N/A	LOW BENZENE, ADDED 4/93
6662	E	058	2	53	LO REGEN	R-582	V	CLEAN SUB GAS VALVE	UPMID CARB LN	CSG	0.32	G	N	N/A	LOW BENZENE
6663	E	060	2	53	LO REGEN	R-582	V	CLEAN SUB GAS BLOCKING VALVE	UPMID CARB LN	CSG	0.32	G	Y	N/A	LOW BENZENE
6664	E	042	2	53	LO REGEN	R-582	VT	RELIEF VALVE	ABOVE REGEN	LO	57.63	L	Y	M	ADDED 4/93

ED_002508A_00000396-00018

TABLE 54
REGISTRATION OF COMPONENTS IN BENZENE SERVICE
LIGHT OIL REGENERATOR R-584

6700	E	179	2	54	LO REGEN	R-584	V	LO WASH SYSTEM VALVE	GROUND LEVEL	LOM	57.63	L	N	AIU	LO WASH	
6701	E	186	2	54	LO REGEN	R-584	V	LO WASH SYSTEM VALVE	GROUND LEVEL	LOM	57.63	L	Y	MIU	LO WASH	
6702	E	189	2	54	LO REGEN	R-584	V	LO WASH SYSTEM VALVE	GROUND LEVEL	LOM	57.63	L	Y	MIU	LO WASH	
6703	E	188	2	54	LO REGEN	R-584	V	LO WASH SYSTEM VALVE	GROUND LEVEL	LOM	57.63	L	Y	MIU	LO WASH	
6704	E	187	2	54	LO REGEN	R-584	V	LO WASH SYSTEM VALVE	GROUND LEVEL	LOM	57.63	L	Y	MIU	LO WASH	
6705			2	54	LO REGEN	R-584	V	LO WASH SYSTEM VALVE	GROUND LEVEL	LOM	57.63	L	Y	MIU	LO WASH, ADDED 12-95	
6706			2	54	LO REGEN	R-584	V	LO WASH SYSTEM VALVE	GROUND LEVEL	LOM	57.63	L	Y	MIU	LO WASH, ADDED 12-95	
6707			2	54	LO REGEN	R-584	V	LO WASH SYSTEM VALVE	GROUND LEVEL	LOM	57.63	L	Y	MIU	LO WASH, ADDED 12-95	
6708			2	54	LO REGEN	R-584	V	LO WASH SYSTEM VALVE	GROUND LEVEL	LOM	57.63	L	Y	MIU	LO WASH, ADDED 12-95	
6709			2	54	LO REGEN	R-584	V	LO WASH SYSTEM VALVE	GROUND LEVEL	LOM	57.63	L	Y	MIU	LO WASH, ADDED 12-95	
6710			2	54	LO REGEN	R-584	V	LO WASH SYSTEM VALVE	GROUND LEVEL	LOM	57.63	L	Y	MIU	LO WASH, ADDED 12-95	
6711	E	184	2	54	LO REGEN	R-584	V	LO WASH SYSTEM VALVE	GROUND LEVEL	LOM	57.63	L	Y	MIU	LO WASH	
6712			2	54	LO REGEN	R-584	V	LO WASH SYSTEM VALVE	GROUND LEVEL	LOM	57.63	L	Y	MIU	LO WASH, ADDED 12-95	
6713			2	54	LO REGEN	R-584	V	LO WASH SYSTEM VALVE	GROUND LEVEL	LOM	57.63	L	Y	MIU	LO WASH, ADDED 12-95	
6714			2	54	LO REGEN	R-584	V	LO WASH SYSTEM VALVE	GROUND LEVEL	LOM	57.63	L	Y	MIU	LO WASH, ADDED 12-95	
6715	E	183	2	54	LO REGEN	R-584	V	LO WASH SYSTEM VALVE	GROUND LEVEL	LOM	57.63	L	Y	MIU	LO WASH	
6716			2	54	LO REGEN	R-584	V	LO WASH SYSTEM VALVE	GROUND LEVEL	LOM	57.63	L	Y	MIU	LO WASH, ADDED 12-95	
6720	E	080	2	54	LO REGEN	R-584	V	LO WASH SYSTEM VALVE	UPPER MID LEV	LOM	57.63	L	Y	MIU	LO WASH	
6721	E	081	2	54	LO REGEN	R-584	V	LO WASH SYSTEM VALVE	UPPER MID LEV	LOM	57.63	L	Y	MIU	LO WASH	
6722	E	082	2	54	LO REGEN	R-584	V	LO WASH SYSTEM VALVE	UPPER MID LEV	LOM	57.63	L	Y	MIU	LO WASH	
6723	E	083	2	54	LO REGEN	R-584	V	LO WASH SYSTEM VALVE	UPPER MID LEV	LOM	57.63	L	Y	MIU	LO WASH	
6724	E	084	2	54	LO REGEN	R-584	V	LO WASH SYSTEM VALVE	UPPER MID LEV	LOM	57.63	L	Y	MIU	LO WASH	
6730	E	050	2	54	LO REGEN	R-584	V	SUB SUB GAS OUTLET VALVE	TOP TO MID	SSG	15.00	G	Y	M		
6731	E	086	2	54	LO REGEN	R-584	V	SUB SUB GAS VALVE	UPMID SUB SUB	SSG	15.00	G	Y	M		
6732			2	54	LO REGEN	R-584	V	SUB SUB GAS VALVE	UPMID SUB SUB	SSG	15.00	G	Y	M	ADDED 12-95	
6733			2	54	LO REGEN	R-584	V	SUB SUB GAS VALVE	UPMID SUB SUB	SSG	15.00	G	Y	M	ADDED 12-95	
6734			2	54	LO REGEN	R-584	V	SUB SUB GAS VALVE	UPMID SUB SUB	SSG	15.00	G	Y	M	ADDED 12-95	
6735	E	085	2	54	LO REGEN	R-584	V	SUB SUB GAS BLOCKING VALVE	UPMID SUB SUB	SSG	15.00	G	Y	M		
6740	E	126	2	54	LO REGEN	R-584	V	DIFFERENTIAL PRESSURE TAP VALVE	TOP LEVEL	LO	57.63	L	N	A		
6741	E	138	2	54	LO REGEN	R-584	V	DIFFERENTIAL PRESSURE TAP VALVE	TOP LEVEL	LO	57.63	L	Y	M		
6742	E	139	2	54	LO REGEN	R-584	V	DIFFERENTIAL PRESSURE TAP 3 VALVE BLOCK	TOP LEVEL	LO	57.63	L	Y	M		
6743			2	54	LO REGEN	R-584	DP	DIFFERENTIAL PRESSURE	TOP LEVEL	LO	57.63	L	Y	M	ADDED 12-95	
6744	E	127	2	54	LO REGEN	R-584	V	DIFFERENTIAL PRESSURE TAP VALVE	TOP LEVEL	LO	57.63	L	Y	M		
6745	E	135	2	54	LO REGEN	R-584	V	DIFFERENTIAL PRESSURE TAP VALVE	TOP LEVEL	LO	57.63	L	Y	M		
6746	E	136	2	54	LO REGEN	R-584	V	DIFFERENTIAL PRESSURE TAP VALVE	TOP LEVEL	LO	57.63	L	Y	M		
6747	E	137	2	54	LO REGEN	R-584	G	DIFFERENTIAL PRESSURE TAP GAUGE	TOP LEVEL	LO	57.63	L	Y	M		
6750	E	051	2	54	LO REGEN	R-584	V	SUB GAS INLET VALVE	TOP TO MID	SG	16.00	L	Y	M		
6751	E	079	2	54	LO REGEN	R-584	V	DERIMING GAS VALVE	UPMID SUB IN	SG	16.00	G	Y	M		
6752	E	078	2	54	LO REGEN	R-584	V	SUB GAS VALVE	UPMID SUB IN	SG	16.00	G	Y	M		
6753	E	077	2	54	LO REGEN	R-584	V	SUB GAS VALVE	UPMID SUB IN	SG	16.00	G	Y	M		
6754	E	076	2	54	LO REGEN	R-584	V	SUB GAS VALVE	UPMID SUB IN	SG	16.00	G	Y	M		
6755	E	075	2	54	LO REGEN	R-584	G	SUB GAS GAUGE	UPMID SUB IN	SG	16.00	G	Y	M		
6756	E	074	2	54	LO REGEN	R-584	V	SUB GAS BLOCKING VALVE	UPMID SUB IN	SG	16.00	G	Y	M		
6760	E	049	2	54	LO REGEN	R-584	V	CLEAN SUB GAS OUTLET VALVE	TOP TO MID	CSG	0.32	G	Y	N/A		
6761	E	088	2	54	LO REGEN	R-584	V	CLEAN SUB GAS OUT BLOCKING VALVE	UPMID CARB LN	CSG	0.32	G	Y	N/A		
6762	E	043	2	54	LO REGEN	R-584	VT	RELIEF VALVE	ABOVE REGEN	LO	57.63	L	Y	M		

ED_002508A_00000396-00019

TABLE 55
REGISTRATION OF COMPONENTS IN BENZENE SERVICE
LIGHT OIL REGENERATOR R-586

6800	E	158	2	55	LO REGEN	R-586	V	LO WASH SYSTEM VALVE	BOTTOM	LOM	57.63	L	N	AIU	
6801	E	165	2	55	LO REGEN	R-586	V	LO WASH SYSTEM VALVE	BOTTOM	LOM	57.63	L	Y	MIU	
6802	E	168	2	55	LO REGEN	R-586	V	LO WASH SYSTEM VALVE	BOTTOM	LOM	57.63	L	Y	MIU	
6803	E	167	2	55	LO REGEN	R-586	V	LO WASH SYSTEM VALVE	BOTTOM	LOM	57.63	L	Y	MIU	
6804	E	166	2	55	LO REGEN	R-586	V	LO WASH SYSTEM VALVE	BOTTOM	LOM	57.63	L	Y	MIU	
6805	E190		2	55	LO REGEN	R-586	V	LO WASH SYSTEM CLEANOUT VALVE	BOTTOM	LOM	57.63	L	Y	MIU	ADDED 12-95
6806			2	55	LO REGEN	R-586	V	LO WASH SYSTEM VALVE	BOTTOM	LOM	57.63	L	Y	MIU	ADDED 12-95
6807			2	55	LO REGEN	R-586	V	LO WASH SYSTEM VALVE	BOTTOM	LOM	57.63	L	N	AIU	ADDED 12-95
6808			2	55	LO REGEN	R-586	V	LO WASH SYSTEM VALVE	BOTTOM	LOM	57.63	L	Y	MIU	ADDED 12-95
6809			2	55	LO REGEN	R-586	V	LO WASH SYSTEM VALVE	BOTTOM	LOM	57.63	L	Y	MIU	ADDED 12-95
6810	E	163	2	55	LO REGEN	R-586	V	LO WASH SYSTEM VALVE	BOTTOM	LOM	57.63	L	Y	MIU	
6811			2	55	LO REGEN	R-586	V	LO WASH SYSTEM VALVE	BOTTOM	LOM	57.63	L	Y	MIU	ADDED 12-95
6812			2	55	LO REGEN	R-586	V	LO WASH SYSTEM VALVE	BOTTOM	LOM	57.63	L	Y	MIU	ADDED 12-95
6813			2	55	LO REGEN	R-586	V	LO WASH SYSTEM VALVE	BOTTOM	LOM	57.63	L	Y	MIU	ADDED 12-95
6814			2	55	LO REGEN	R-586	V	LO WASH SYSTEM VALVE	BOTTOM	LOM	57.63	L	Y	MIU	ADDED 12-95
6815			2	55	LO REGEN	R-586	V	LO WASH SYSTEM VALVE	BOTTOM	LOM	57.63	L	Y	MIU	ADDED 12-95
6816	E	161	2	55	LO REGEN	R-586	V	LO WASH SYSTEM VALVE	BOTTOM	LOM	57.63	L	N	AIU	
6817	E	162	2	55	LO REGEN	R-586	V	LO WASH SYSTEM VALVE	BOTTOM	LOM	57.63	L	Y	MIU	
6820	E	099	2	55	LO REGEN	R-586	V	LO WASH SYSTEM VALVE	UPPER MID	LOM	57.63	L	Y	MIU	
6821	E	100	2	55	LO REGEN	R-586	V	LO WASH SYSTEM VALVE	UPPER MID	LOM	57.63	L	Y	MIU	
6822	E	101	2	55	LO REGEN	R-586	V	LO WASH SYSTEM VALVE	UPPER MID	LOM	57.63	L	Y	MIU	
6823	E	102	2	55	LO REGEN	R-586	V	LO WASH SYSTEM VALVE	UPPER MID	LOM	57.63	L	Y	MIU	
6830	E	053	2	55	LO REGEN	R-586	V	SUB SUB GAS OUTLET VALVE	LOW TOP	LO	57.63	L	Y	M	
6831	E	097	2	55	LO REGEN	R-586	V	SUB SUB GAS VALVE	UPPER MID	SSG	15.00	G	Y	M	
6832	E	098	2	55	LO REGEN	R-586	V	SUB SUB GAS VALVE	UPPER MID	SSG	15.00	G	Y	M	
6833	E	096	2	55	LO REGEN	R-586	V	SUB SUB GAS VALVE	UPPER MID	SSG	15.00	G	Y	M	
6834	E	095	2	55	LO REGEN	R-586	V	SUB SUB GAS BLOCKING VALVE	UPPER MID	SSG	15.00	G	Y	M	
6840	E	128	2	55	LO REGEN	R-586	V	DIFFERENTIAL PRESSURE TAP VALVE	TOP	LO	57.63	L	N	A	
6841	E	140	2	55	LO REGEN	R-586	V	DIFFERENTIAL PRESSURE TAP 3 VALVE BLOCK	TOP	LO	57.63	L	Y	M	
6842			2	55	LO REGEN	R-586	DP	DIFFERENTIAL PRESSURE	TOP	LO	57.63	L	Y	M	ADDED 12-95
6843	E	129	2	55	LO REGEN	R-586	V	DIFFERENTIAL PRESSURE TAP VALVE	TOP	LO	57.63	L	N	A	
6844	E	141	2	55	LO REGEN	R-586	V	DIFFERENTIAL PRESSURE TAP VALVE	TOP	LO	57.63	L	Y	M	
6845	E	142	2	55	LO REGEN	R-586	V	DIFFERENTIAL PRESSURE TAP VALVE	TOP	LO	57.63	L	Y	M	
6846			2	55	LO REGEN	R-586	DP	DIFFERENTIAL PRESSURE	TOP	LO	57.63	L	Y	M	ADDED 12-95
6850	E	054	2	55	LO REGEN	R-586	V	SUB GAS INLET VALVE	LOW TOP	LO	57.63	L	Y	M	
6851	E	105	2	55	LO REGEN	R-586	V	SUB GAS VALVE	UPPER MID	SG	16.00	G	Y	M	
6852	E	104	2	55	LO REGEN	R-586	V	SUB GAS VALVE	UPPER MID	SG	16.00	G	Y	M	
6853	E	106	2	55	LO REGEN	R-586	V	DERIMING GAS VALVE	UPPER MID	SG	16.00	G	Y	M	
6854	E	103	2	55	LO REGEN	R-586	V	504C2 LOADING VALVE	UPPER MID	SG	16.00	G	Y	M	
6860	E	052	2	55	LO REGEN	R-586	V	CLEAN SUB GAS OUTLET VALVE	LOW TOP	CSG	0.32	L	Y	N/A	
6861	E	094	2	55	LO REGEN	R-586	V	CLEAN SUB GAS VALVE	UPPER MID	CSG	0.32	L	Y	N/A	
6862	E	093	2	55	LO REGEN	R-586	V	CLEAN SUB GAS VALVE	UPPER MID	CSG	0.32	L	Y	N/A	
6864			2	55	LO REGEN	R-586	V	CLEAN SUB GAS VALVE	UPPER MID	CSG	0.32	L	Y	N/A	ADDED 12-95
6865	E	092	2	55	LO REGEN	R-586	V	CLEAN SUB GAS BLOCKING VALVE	UPPER MID	CSG	0.32	G	Y	N/A	
6866	E	044	2	55	LO REGEN	R-586	VT	RELIEF VALVE	TOP	LO	57.63	L	Y	M	

ED_002508A_00000396-00020

TABLE 56
REGISTRATION OF COMPONENTS IN BENZENE SERVICE
LIGHT OIL REGENERATOR R-590

6900	E	189	2	56	LO REGEN	R-590	V	LIGHT OIL WASH	BOTTOM	LOM	57.63	L	N	AIU	
6901	E	170	2	56	LO REGEN	R-590	V	LIGHT OIL WASH	BOTTOM	LOM	57.63	L	Y	MIU	
6902	E	178	2	56	LO REGEN	R-590	V	LIGHT OIL WASH	BOTTOM	LOM	57.63	L	Y	MIU	
6903			2	56	LO REGEN	R-590	V	LIGHT OIL WASH	BOTTOM	LOM	57.63	L	Y	MIU	
6904			2	56	LO REGEN	R-590	V	LIGHT OIL WASH	BOTTOM	LOM	57.63	L	Y	MIU	
6905	E	177	2	56	LO REGEN	R-590	V	LIGHT OIL WASH	BOTTOM	LOM	57.63	L	Y	MIU	
6906	E	175	2	56	LO REGEN	R-590	V	LIGHT OIL WASH	BOTTOM	LOM	57.63	L	Y	MIU	
6907	E	176	2	56	LO REGEN	R-590	V	LIGHT OIL WASH	BOTTOM	LOM	57.63	L	Y	MIU	
6908	E	174	2	56	LO REGEN	R-590	V	LIGHT OIL WASH	BOTTOM	LOM	57.63	L	Y	MIU	
6909			2	56	LO REGEN	R-590	V	LIGHT OIL WASH	BOTTOM	LOM	57.63	L	Y	MIU	
6910	E	203	2	56	LO REGEN	R-590	V	LIGHT OIL WASH	BOTTOM	LOM	57.63	L	Y	MIU	
6911			2	56	LO REGEN	R-590	V	LIGHT OIL WASH	BOTTOM	LOM	57.63	L	Y	MIU	
6912	E	173	2	56	LO REGEN	R-590	V	LIGHT OIL WASH	BOTTOM	LOM	57.63	L	Y	MIU	
6913	E	202	2	56	LO REGEN	R-590	V	LIGHT OIL WASH	BOTTOM	LOM	57.63	L	Y	MIU	
6914			2	56	LO REGEN	R-590	V	LIGHT OIL WASH	BOTTOM	LOM	57.63	L	Y	MIU	
6916			2	56	LO REGEN	R-590	V	LIGHT OIL WASH CLEANOUT	BOTTOM	LOM	57.63	L	N	AIU	ADDED 12-95
6920	E	116	2	56	LO REGEN	R-590	V	LIGHT OIL WASH	MID	LOM	57.63	L	Y	MIU	
6921	E	118	2	56	LO REGEN	R-590	V	LIGHT OIL WASH	MID	LOM	57.63	L	Y	MIU	
6922	E	117	2	56	LO REGEN	R-590	V	LIGHT OIL WASH	MID	LOM	57.63	L	Y	MIU	
6923	E	119	2	56	LO REGEN	R-590	V	LIGHT OIL WASH	MID	LOM	57.63	L	Y	MIU	
6930	E	056	2	56	LO REGEN	R-590	V	SUB SUB GAS OULET	MID S 2 GAS	SSG	15.00	G	Y	M	
6931	E	110	2	56	LO REGEN	R-590	V	SUB SUB GAS BLOCK	MID S 2 GAS	SSG	15.00	G	Y	M	
6932	E	115	2	56	LO REGEN	R-590	V	SUB SUB GAS	MID S 2 GAS	SSG	15.00	G	Y	M	
6933	E	114	2	56	LO REGEN	R-590	V	SUB SUB GAS	MID S 2 GAS	SSG	15.00	G	Y	M	
6934	E	113	2	56	LO REGEN	R-590	V	SUB SUB GAS	MID S 2 GAS	SSG	15.00	G	Y	M	
6940	E	130	2	56	LO REGEN	R-590	V	DIFFERENTIAL PRESSURE TAP	TOP PRESSUR	LO	57.63	L	N	A	
6941	E	143	2	56	LO REGEN	R-590	V	DIFFERENTIAL PRESSURE TAP BLOCK	TOP PRESSUR	LO	57.63	L	Y	M	
6942	E	131	2	56	LO REGEN	R-590	V	DIFFERENTIAL PRESSURE TAP	TOP PRESSUR	LO	57.63	L	N	A	
6943	E	144	2	56	LO REGEN	R-590	V	DIFFERENTIAL PRESSURE TAP	TOP PRESSUR	LO	57.63	L	Y	M	
6944			2	56	LO REGEN	R-590	DP	DIFFERENTIAL PRESSURE CELL	TOP PRESSUR	LO	57.63	L	Y	M	
6945	E	145	2	56	LO REGEN	R-590	V	DIFFERENTIAL PRESSURE TAP	TOP PRESSUR	LO	57.63	L	Y	M	
6946	E	146	2	56	LO REGEN	R-590	G	DIFFERENTIAL PRESSURE TAP	TOP PRESSUR	LO	57.63	L	Y	M	
6950	E	057	2	56	LO REGEN	R-590	V	SUB GAS INLET	TOP SUB IN	SG	16.00	G	Y	M	
6951	E	123	2	56	LO REGEN	V504-D2	V	LOADING	TOP SUB IN	SG	16.00	G	Y	M	
6952			2	56	LO REGEN	V504-D2	V	SUB GAS	TOP SUB IN	SG	16.00	G	Y	M	
6953	E	122	2	56	LO REGEN	R-590	V	SUB GAS	TOP SUB IN	SG	16.00	G	Y	M	
6954	E	121	2	56	LO REGEN	R-590	V	SUB GAS	TOP SUB IN	SG	16.00	G	Y	M	
6955	E	120	2	56	LO REGEN	R-590	V	SUB GAS	TOP SUB IN	SG	16.00	G	Y	M	
6960	E	055	2	56	LO REGEN	R-590	V	CARBONATE GAS OUTLET	TOP CARB OUT	CG	0.32	G	Y	N/A	
6961	E	108	2	56	LO REGEN	R-590	V	CARBONATE GAS	TOP CARB OUT	CG	0.32	G	Y	N/A	
6962	E	109	2	56	LO REGEN	R-590	V	CARBONATE GAS	TOP CARB OUT	CG	0.32	G	Y	N/A	
6963			2	56	LO REGEN	R-590	V	CARBONATE GAS	TOP CARB OUT	CG	0.32	G	Y	N/A	
6964	E	111	2	56	LO REGEN	R-590	G	CARBONATE GAS	TOP CARB OUT	CG	0.32	G	Y	N/A	
6965			2	56	LO REGEN	R-590	V	CARBONATE GAS	TOP CARB OUT	CG	0.32	G	Y	N/A	
6966			2	56	LO REGEN	R-590	V	CARBONATE GAS	TOP CARB OUT	CG	0.32	G	Y	N/A	
6967	E	107	2	56	LO REGEN	R-590	V	CARBONATE GAS BLOCK	TOP CARB OUT	CG	0.32	G	Y	N/A	
6968	E	045	2	56	LO REGEN	R-590	RV	RELIEF	TOP	LO	57.63	L	Y	M	

ED_002508A_00000396-00021

TABLE 57
REGISTRATION OF COMPONENTS IN BENZENE SERVICE
SUB SUB GAS LIGHT OIL REGENERATION AUSPUFF SYSTEM

6970	E	040	2	57	LO REGEN	R-582	V	SUB SUB GAS CONTROL STATION	MD LVL BHND 82	SSG	15.00	G	Y	M	
6971	E	039	2	57	LO REGEN	R-582	V	SUB SUB GAS CONTROL STATION	MD LVL BHND 82	SSG	15.00	G	Y	M	
6972	E	038	2	57	LO REGEN	R-582	V	SUB SUB GAS CONTROL STATION	MD LVL BHND 82	SSG	15.00	G	Y	M	
6973	E	037	2	57	LO REGEN	R-582	V	SUB SUB GAS CONTROL STATION	MD LVL BHND 82	SSG	15.00	G	Y	M	
6974	E	041	2	57	LO REGEN	R-582	V	SUB SUB GAS CONTROL STATION	MD LVL BHND 82	SSG	15.00	G	Y	M	
6975			2	57	LO REGEN	R-582	V	SUB SUB GAS CONTROL STATION	MD LVL BHND 82	SSG	15.00	G	Y	M	
6976	E	031	2	57	LO REGEN	R-582	V	SUB SUB GAS ORIFICE PRESSURE TAP	MD LVL BHND 82	SSG	15.00	G	Y	M	
6977	E	032	2	57	LO REGEN	R-582	PD	SUB SUB GAS ORIFICE PRESSURE TRANSDUCER	MD LVL BHND 82	SSG	15.00	G	Y	M	
6978			2	57	LO REGEN	R-582	V	SUB SUB GAS CONTROL STATION	MD LVL BHND 82	SSG	15.00	G	Y	M	
6979	E	033	2	57	LO REGEN	R-582	G	SUB SUB GAS ORIFICE PRESSURE GAUGE	MD LVL BHND 82	SSG	15.00	G	Y	M	
6980			2	57	LO REGEN	R-582	V	SUB SUB GAS ORIFICE PRESSURE TAP	MD LVL BHND 82	SSG	15.00	G	Y	M	ADDED 12-95
6981			2	57	LO REGEN	R-582	V	SUB SUB GAS ORIFICE PRESSURE TAP	MD LVL BHND 82	SSG	15.00	G	Y	M	
6982	E	035	2	57	LO REGEN	R-582	V	SUB SUB GAS CONTROL STATION	MD LVL BHND 82	SSG	15.00	G	Y	M	
6983	E	504	2	57	PRESSURE	PCV651	G	SUB SUB GAS ORIFICE PRESSURE GAUGE	MD LVL BHND 82	SSG	15.00	G	Y	M	
6984	E	503	2	57	TRANSDUCE	PCV651	PD	SUB SUB GAS ORIFICE PRESSURE TRANSDUCER	MD LVL BHND 82	SSG	15.00	G	Y	M	

ED_002508A_00000396-00022

TABLE 58
REGISTRATION OF COMPONENTS IN BENZENE SERVICE
SUB SUB GAS INJECTION WATER SEPARATOR

7000	F	214	2	58	SEPARATOR	D-600	V	FEED VALVES TO DECANTER BYPASS	GROUND LEVEL	LOW	57.63	L	Y	M	
7001			2	58	SEPARATOR	D-600	V	FEED VALVES TO DECANTER CLEANOUT	GROUND LEVEL	LOW	57.63	L	Y	M	ADDED 12-95
7002	F	211	2	58	SEPARATOR	D-600	V	FEED VALVES TO DECANTER	GROUND LEVEL	LOW	57.63	L	Y	M	RACK ABOVE ROAD 100 YD W CR2
7003	F	212	2	58	SEPARATOR	D-600	V	FEED CONTROL VALVE TO DECANTER	GROUND LEVEL	LOW	57.63	L	Y	M	RACK ABOVE ROAD 100 YD W CR2
7004	F	213	2	58	SEPARATOR	D-600	V	FEED VALVES TO DECANTER	GROUND LEVEL	LOW	57.63	L	Y	M	RACK ABOVE ROAD 100 YD W CR2
7015	F	215	2	58	SEPARATOR	D-600	V	BOTTOM TANK DRAIN	GROUND LEVEL	LOW	57.63	L	Y	M	
7016	F	220	2	58	SEPARATOR	D-600	SG	BOTTOM VALVES SIGHT GLASS/LEVEL CONTROL	GROUND LEVEL	LOW	57.63	L	Y	M	
7017	F	218	2	58	SEPARATOR	D-600	SG	BOTTOM VALVES SIGHT GLASS/LEVEL CONTROL	GROUND LEVEL	LOW	57.63	L	Y	M	
7018	F	216	2	58	SEPARATOR	D-600	V	BOTTOM SIDE DRAIN	GROUND LEVEL	LOW	57.63	L	Y	M	
7019	F	217	2	58	SEPARATOR	D-600	SG	BOTTOM VALVES SIGHT GLASS/LEVEL CONTROL	GROUND LEVEL	LOW	57.63	L	Y	M	
7020	F	321	2	58	SEPARATOR	D-600	V	SIGHT GLASS	GROUND LEVEL	SSG	15.00	G	Y	M	
7021	F	239	2	58	SEPARATOR	D-600	SG	TOP VALVES SIGHT GLASS/LEVEL CONTROL	12' UP	SSG	15.00	G	N	A	
7022	F	219	2	58	SEPARATOR	D-600	SG	BOTTOM VALVES SIGHT GLASS/LEVEL CONTROL	GROUND LEVEL	LOW	57.63	L	Y	M	
7023	F	221	2	58	SEPARATOR	D-600	V	BOTTOM OF LEVEL CONTROL CLEANOUT	GROUND LEVEL	LOW	57.63	L	Y	M	
7024	F	320	2	58	SEPARATOR	D-600	LC	LEVEL CONTROL	GROUND LEVEL	SSG	15.00	G	Y	M	
7025	F	240	2	58	SEPARATOR	D-600	SG	TOP VALVES SIGHT GLASS/LEVEL CONTROL	12' UP	SSG	15.00	G	N	A	
7026			2	58	SEPARATOR	D-600	V	SIGHT GLASS BOTTOM VALVES	GROUND LEVEL	SSG	15.00	G	Y	M	ADDED 12-95
7027			2	58	SEPARATOR	D-600	V	SIGHT GLASS BOTTOM VALVES	GROUND LEVEL	SSG	15.00	G	Y	M	ADDED 12-95
7028			2	58	SEPARATOR	D-600	V	SIGHT GLASS BOTTOM VALVES	GROUND LEVEL	SSG	15.00	G	Y	M	ADDED 12-95
7030	F	318	2	58	SEPARATOR	D-600	V	NEW RELIEF VALVE BLOCKING VALVE		SSG	15.00	G	Y	M	
7031	F	317	2	58	SEPARATOR	D-600	V	OLD RELIEF VALVE		SSG	15.00	G	Y	M	
7032	F	319	2	58	SEPARATOR	D-600	V	NEW RELIEF VALVES	20' UP	SSG	15.00	G	Y	M	
7033	F	285	2	58	SEPARATOR	D-600	V	TOP GAS VALVES		SSG	15.00	G	Y	M	
7034	F	284	2	58	SEPARATOR	D-600	V	TOP GAS VALVES		SSG	15.00	G	Y	M	
7035	F	289	2	58	SEPARATOR	D-600	V	TOP GAS VALVES		SSG	15.00	G	N	A	
7036	F	243	2	58	SEPARATOR	D-600	V	TOP GAS VALVES TANK BYPASS	20' UP	SSG	15.00	G	N	A	
7037	F	242	2	58	SEPARATOR	D-600	V	TOP GAS VALVES	20' UP	SSG	15.00	G	N	A	
7038	F	241	2	58	SEPARATOR	D-600	V	TOP GAS VALVES	20' UP	SSG	15.00	G	N	A	

ED_002508A_00000396-00023

TABLE 59
REGISTRATION OF COMPONENTS IN BENZENE SERVICE
SUB SUB GAS WATER COOLER

7050	E	258	2	59	WATR COOL	E-639/40	V	BLOCKING VALVE BYPASS LOOP	LEVL 2, INLET	SSG	15.00	G	Y	M
7051	E	257	2	59	WATR COOL	E-639/40	V	BYPASS LOOP CLEANOUT VALVE	LEVL 2, INLET	SSG	15.00	G	Y	M
7052	E	259	2	59	WATR COOL	E-639/40	V	BYPASS LOOP CLEANOUT VALVE	LEVL 2, INLET	SSG	15.00	G	Y	M
7053	E	271	2	59	WATR COOL	E-639/40	V	BLOCKING VALVE BYPASS LOOP	LEVL 2, INLET	SSG	15.00	G	Y	M
7054	E	269	2	59	WATR COOL	E-639/40	V	BLOCKING VALVE BYPASS LOOP	LEVL 2, INLET	SSG	15.00	G	Y	M
7055	E	270	2	59	WATR COOL	E-639/40	V	BLOCKING VALVE BYPASS LOOP	LEVL 2, INLET	SSG	15.00	G	Y	M
7056	E	264	2	59	WATR COOL	E-640	V	INLET BLOCKING VALVE	LEVL 2, INLET	SSG	15.00	G	Y	M
7057	E	265	2	59	WATR COOL	E-639	V	INLET CLEANOUT VALVE	LEVL 2, INLET	SSG	15.00	G	Y	M
7058	E	266	2	59	WATR COOL	E-639	V	INLET CLEANOUT VALVE	LEVL 2, INLET	SSG	15.00	G	Y	M
7059	E	267	2	59	WATR COOL	E-639	V	INLET SIDE COOLER CLEANOUT VALVE	LEVL 2, INLET	SSG	15.00	G	Y	M
7060	E	506	2	59	WATR COOL	E-640	V	INLET CLEANOUT VALVE	LEVL 2, INLET	SSG	15.00	G	Y	M
7061	E	505	2	59	WATR COOL	E-640	V	INLET CLEANOUT VALVE	LEVL 2, INLET	SSG	15.00	G	Y	M
7062	E	260	2	59	WATR COOL	E-640	V	INLET BLOCKING VALVE	LEVL 2, INLET	SSG	15.00	G	Y	M
7063	E	262	2	59	WATR COOL	E-640	V	INLET CLEANOUT VALVE	LEVL 2, INLET	SSG	15.00	G	Y	M
7064	E	261	2	59	WATR COOL	E-640	V	INLET CLEANOUT VALVE	LEVL 2, INLET	SSG	15.00	G	Y	M
7065	E	263	2	59	WATR COOL	E-640	V	INLET SIDE COOLER CLEANOUT VALVE	LEVL 2, INLET	SSG	15.00	G	Y	M
7070	E	297	2	59	WATR COOL	E-639	V	OUTLET CLEANOUT VALVE	LEVL 2, DISCHR	SSG	15.00	G	Y	M
7071	E	298	2	59	WATR COOL	E-639	V	OUTLET BLOCKING VALVE	LEVL 2, DISCHR	SSG	15.00	G	Y	M
7072	E	294	2	59	WATR COOL	E-640	V	OUTLET SIDE COOLER CLEANOUT VALVE	LEVL 2, DISCHR	SSG	15.00	G	Y	M
7073	E	293	2	59	WATR COOL	E-640	V	OUTLET BLOCKING VALVE	LEVL 2, DISCHR	SSG	15.00	G	Y	M
7074	E	295	2	59	WATR COOL	E-639	V	OUTLET SIDE COOLER CLEANOUT VALVE	LEVL 2, DISCHR	SSG	15.00	G	Y	M
7075	E	292	2	59	WATR COOL	E-640	V	OUTLET CLEANOUT VALVE	LEVL 2, DISCHR	SSG	15.00	G	Y	M
7076	E	296	2	59	WATR COOL	E-639	V	OUTLET CLEANOUT VALVE	LEVL 2, DISCHR	SSG	15.00	G	Y	M
7077	E	299	2	59	WATR COOL	E-639/40	V	COOLER OUTLET TO D602 CLEANOUT VALVE	LEVL 2, DISCHR	SSG	15.00	G	Y	M

ED_002508A_00000396-00024

TABLE 60
REGISTRATION OF COMPONENTS IN BENZENE SERVICE
SUB SUB GAS WATER SEPARATOR

7100	F	184	2	60	SEPARATOR	D-602	V	TANK BOTTOM DRAIN	GROUND LEVEL	LOW	57.63	L	Y	M	
7101	F	176	2	60	SEPARATOR	D-602	V	FEED VALVES TO DECANTERS	GROUND LEVEL	LOW	57.63	L	Y	M	
7102	F	179	2	60	SEPARATOR	D-602	V	FEED VALVES TO DECANTERS	GROUND LEVEL	LOW	57.63	L	Y	M	
7103	F	181	2	60	SEPARATOR	D-602	V	FEED VALVES TO DECANTERS	GROUND LEVEL	LOW	57.63	L	Y	M	
7104	F	177	2	60	SEPARATOR	D-602	V	FEED VALVES TO DECANTERS	GROUND LEVEL	LOW	57.63	L	Y	M	
7105	F	180	2	60	SEPARATOR	D-602	V	FEED VALVES TO DECANTERS	GROUND LEVEL	LOW	57.63	L	Y	M	
7106			2	60	SEPARATOR	D-602	V	FEED VALVES TO DECANTERS	GROUND LEVEL	LOW	57.63	L	Y	M	ADDED 12-95
7107			2	60	SEPARATOR	D-602	V	FEED VALVES TO DECANTERS	GROUND LEVEL	LOW	57.63	L	Y	M	ADDED 12-95
7108			2	60	SEPARATOR	D-602	V	FEED VALVES TO DECANTERS	GROUND LEVEL	LOW	57.63	L	Y	M	ADDED 12-95
7109			2	60	SEPARATOR	D-602	V	FEED VALVES TO DECANTERS	GROUND LEVEL	LOW	57.63	L	Y	M	ADDED 12-95
7110	F	189	2	60	SEPARATOR	D-602	V	SIGHT GLASS LEVEL CONTROLER BOTTOM VALVES	GROUND LEVEL	LOW	57.63	L	Y	M	PIPING REVISION NOTED 11/91
7111			2	60	SEPARATOR	D-602	V	SIGHT GLASS LEVEL CONTROLER BOTTOM VALVES	GROUND LEVEL	LOW	57.63	L	Y	M	ADDED 12-95
7112	F	186	2	60	SEPARATOR	D-602	V	SIGHT GLASS LEVEL CONTROLER BOTTOM VALVES	GROUND LEVEL	LOW	57.63	L	Y	M	
7113	F	185	2	60	SEPARATOR	D-602	V	SIGHT GLASS LEVEL CONTROLER BOTTOM VALVES	GROUND LEVEL	LOW	57.63	L	Y	M	
7114			2	60	SEPARATOR	D-602	V	SIGHT GLASS LEVEL CONTROLER BOTTOM VALVES	GROUND LEVEL	LOW	57.63	L	Y	M	ADDED 12-95
7115			2	60	SEPARATOR	D-602	V	SIGHT GLASS LEVEL CONTROLER BOTTOM VALVES	GROUND LEVEL	LOW	57.63	L	Y	M	ADDED 12-95
7116			2	60	SEPARATOR	D-602	V	SIGHT GLASS LEVEL CONTROLER BOTTOM VALVES	GROUND LEVEL	LOW	57.63	L	Y	M	ADDED 12-95
7117	F	191	2	60	SEPARATOR	D-602	V	SIGHT GLASS LEVEL CONTROLER BOTTOM VALVES	GROUND LEVEL	LOW	57.63	L	Y	M	PIPING REVISION NOTED 11/91
7118	F	188	2	60	SEPARATOR	D-602	V	SIGHT GLASS LEVEL CONTROLER BOTTOM VALVES	GROUND LEVEL	LOW	57.63	L	Y	M	PIPING REVISION NOTED 11/91
7119	F	418	2	60	SEPARATOR	D-602	LC	LEVEL CONTROLER	GROUND LEVEL	SSG	15.00	G	Y	M	
7120	F	187	2	60	SEPARATOR	D-602	SG	SIGHT GLASS	GROUND LEVEL	LOW	57.63	L	Y	M	PIPING REVISION NOTED 11/91
7121	F	234	2	60	SEPARATOR	D-602	V	SIGHT GLASS LEVEL CONTROLER TOP VALVES	GROUND LEVEL	SSG	15.00	G	Y	M	
7122	F	232	2	60	SEPARATOR	D-602	V	SIGHT GLASS LEVEL CONTROLER TOP VALVES	GROUND LEVEL	SSG	15.00	G	Y	M	
7123	F	233	2	60	SEPARATOR	D-602	V	SIGHT GLASS LEVEL CONTROLER TOP VALVES	GROUND LEVEL	SSG	15.00	G	Y	M	
7124	F	231	2	60	SEPARATOR	D-602	V	SIGHT GLASS LEVEL CONTROLER TOP VALVES	GROUND LEVEL	SSG	15.00	G	Y	M	
7130	F	045	2	60	SEPARATOR	D-602	V	INLET PRESSURE TAP	SECOND LEVEL	SSG	15.00	G	Y	M	
7131	F	414	2	60	SEPARATOR	D-602	V	NEW RELIEF VALVE BLOCKING VALVE	SECOND LEVEL	SSG	15.00	G	Y	M	
7132	F	415	2	60	SEPARATOR	D-602	V	NEW RELIEF VALVE	SECOND LEVEL	SSG	15.00	G	Y	M	
7133	F	223	2	60	SEPARATOR	D-602	V	SUB SUB GAS OUT RELIEF VALVE	SECOND LEVEL	SSG	15.00	G	Y	M	
7134	F	225	2	60	SEPARATOR	D-602	V	SUB SUB GAS OUT	SECOND LEVEL	SSG	15.00	G	Y	M	
7135	F	226	2	60	SEPARATOR	D-602	V	SUB SUB GAS OUT CLEANOUT	SECOND LEVEL	SSG	15.00	G	Y	M	
7136	F	224	2	60	SEPARATOR	D-602	V	SUB SUB GAS OUT	SECOND LEVEL	SSG	15.00	G	Y	M	
7137	F	227	2	60	SEPARATOR	D-602	V	SUB SUB GAS OUT BLOCKING VALVE	SECOND LEVEL	SSG	15.00	G	Y	M	
7138	F228		2	60	SEPARATOR	D-602		SUB SUB GAS OUT	SECOND LEVEL	SSG	15.00	G	Y	M	ADDED 12-95
7139	F	229	2	60	SEPARATOR	D-602	V	SUB SUB GAS OUT	SECOND LEVEL	SSG	15.00	G	Y	M	
7140	F	230	2	60	SEPARATOR	D-602	V	SUB SUB GAS RETURN	SECOND LEVEL	SSG	15.00	G	Y	M	
7141	F	295	2	60	SEPARATOR	D-602	V	SUB SUB GAS OUT TO DOWN RIVER?	THIRD LEVEL	SSG	15.00	G	Y	M	
7142	F	296	2	60	SEPARATOR	D-602	V	SUB SUB GAS OUT CONTROL VALVE DOWN RIVER	THIRD LEVEL	SSG	15.00	G	Y	M	
7143	F	297	2	60	SEPARATOR	D-602	V	SUB SUB GAS OUT TO DOWN RIVER?	THIRD LEVEL	SSG	15.00	G	Y	M	

ED_002508A_00000396-00025

TABLE 61
REGISTRATION OF COMPONENTS IN BENZENE SERVICE
SUB SUB GAS AMMONIA COOLERS

7150			2	61	COOLER	E-641	V	INLET BLOCKING VALVE	INLET END	SSG	15.00	G	Y	M	ADDED 12-95
7151			2	61	COOLER	E-641	V	INLET CLEANOUT VALVE	INLET END	SSG	15.00	G	Y	M	ADDED 12-95
7152	F	307	2	61	COOLER	E-641	V	INLET BLOCKING VALVE	INLET END	SSG	15.00	G	Y	M	
7153			2	61	COOLER	E-641	V	INLET CLEANOUT VALVE	INLET END	SSG	15.00	G	Y	M	ADDED 12-95
7154			2	61	COOLER	E-641	V	OUTLET BLOCKING VALVE	DISCHARGE EN	SSG	15.00	G	Y	M	ADDED 12-95
7155			2	61	COOLER	E-641	V	OUTLET CLEANOUT VALVE	DISCHARGE EN	SSG	15.00	G	Y	M	ADDED 12-95
7156			2	61	COOLER	E-641	V	OUTLET BLOCKING VALVE	DISCHARGE EN	SSG	15.00	G	Y	M	ADDED 12-95
7160	F	308	2	61	COOLER	E-642	V	INLET BLOCKING VALVE	INLET END	SSG	15.00	G	Y	M	
7161	F	309	2	61	COOLER	E-642	V	INLET CLEANOUT VALCE	INLET END	SSG	15.00	G	Y	M	
7162			2	61	COOLER	E-642	V	INLET BLOCKING VALVE	INLET END	SSG	15.00	G	Y	M	ADDED 12-95
7163			2	61	COOLER	E-642	V	INLET CLEANOUT VALVE	INLET END	SSG	15.00	G	Y	M	ADDED 12-95
7164	F	311	2	61	COOLER	E-642	V	OUTLET BLOCKING VALVE	DISCHARGE EN	SSG	15.00	G	Y	M	
7165	F	312	2	61	COOLER	E-642	V	OUTLET CLEANOUT VALVE	DISCHARGE EN	SSG	15.00	G	Y	M	
7166	F	313	2	61	COOLER	E-642	V	OUTLET BLOCKING VALVE	DISCHARGE EN	SSG	15.00	G	Y	M	

ED_002508A_00000396-00026

TABLE 62
REGISTRATION OF COMPONENTS IN BENZENE SERVICE
SUB SUB GAS AMMONIA COOLER SEPARATOR

7200	F	193	2	62	SEPARATOR	D-624	V	TANK BOTTOM DRAIN	GROUND LEVEL	LOW	57.63	L	Y	M	NEW 6-93
7201	F	207	2	62	SEPARATOR	D-624	V	FEED TO DECANTERS	GROUND LEVEL	LOW	57.63	L	Y	M	NEW 6/93
7202	F	204	2	62	SEPARATOR	D-624	V	FEED TO DECANTERS	GROUND LEVEL	LOW	57.63	L	Y	M	NEW 6/93
7203	F	205	2	62	SEPARATOR	D-624	V	FEED TO DECANTERS	GROUND LEVEL	LOW	57.63	L	Y	M	NEW 6/93
7204	F	206	2	62	SEPARATOR	D-624	V	FEED TO DECANTERS	GROUND LEVEL	LOW	57.63	L	Y	M	NEW 6/93
7205	F	203	2	62	SEPARATOR	D-624	V	FEED TO DECANTERS CONTROL VALVE	GROUND LEVEL	LOW	57.63	L	Y	M	NEW 3/94
7206			2	62	SEPARATOR	D-624	V	FEED TO DECANTERS CONTROL VALVE	GROUND LEVEL	LOW	57.63	L	Y	M	ADDED 12-95
7207	F	200	2	62	SEPARATOR	D-624	V	FEED TO DECANTERS	GROUND LEVEL	LOW	57.63	L	Y	M	
7208	F	201	2	62	SEPARATOR	D-624	V	FEED TO DECANTERS	GROUND LEVEL	LOW	57.63	L	Y	M	NEW 6/93
7209	F	202	2	62	SEPARATOR	D-624	V	FEED TO DECANTERS	GROUND LEVEL	LOW	57.63	L	Y	M	NEW 6/93
7215			2	62	SEPARATOR	D-624	V	SIGHT GLASS/ LEVEL CONTROL BOTTOM	GROUND LEVEL	LOW	57.63	L	Y	M	ADDED 12-95
7216			2	62	SEPARATOR	D-624	V	SIGHT GLASS/ LEVEL CONTROL BOTTOM	GROUND LEVEL	LOW	57.63	L	Y	M	ADDED 12-95
7217			2	62	SEPARATOR	D-624	V	SIGHT GLASS/ LEVEL CONTROL BOTTOM	GROUND LEVEL	LOW	57.63	L	Y	M	ADDED 12-95
7218	F	197	2	62	SEPARATOR	D-624	V	SIGHT GLASS/ LEVEL CONTROL BOTTOM	GROUND LEVEL	LOW	57.63	L	Y	M	
7219			2	62	SEPARATOR	D-624	V	SIGHT GLASS/ LEVEL CONTROL BOTTOM	GROUND LEVEL	LOW	57.63	L	Y	M	ADDED 12-95
7220	F	196	2	62	SEPARATOR	D-624	V	SIGHT GLASS/ LEVEL CONTROL BOTTOM	GROUND LEVEL	LOW	57.63	L	Y	M	
7221			2	62	SEPARATOR	D-624	V	LEVEL CONTROL BOTTOM VALVES	GROUND LEVEL	LOW	57.63	L	Y	M	ADDED 12-95
7222			2	62	SEPARATOR	D-624	V	LEVEL CONTROL BOTTOM VALVES	GROUND LEVEL	LOW	57.63	L	Y	M	ADDED 12-95
7223			2	62	SEPARATOR	D-624	V	LEVEL CONTROL BOTTOM VALVES	GROUND LEVEL	LOW	57.63	L	Y	M	ADDED 12-95
7229	F	061	2	62	SEPARATOR	D-624	LC	LEVEL CONTROLER	GROUND LEVEL	LOW	57.63	L	Y	M	
7230	F	060	2	62	SEPARATOR	D-624	SG	SIGHT GLASS	GROUND LEVEL	LOW	57.63	L	Y	M	
7231	F	238	2	62	SEPARATOR	D-624	V	SIGHT GLASS/ LEVEL CONTROL TOP VALVES	GROUND LEVEL	SSG	15.00	G	N	A	
7232	F	237	2	62	SEPARATOR	D-624	V	SIGHT GLASS/ LEVEL CONTROL TOP VALVES	GROUND LEVEL	SSG	15.00	G	N	A	
7233	F	236	2	62	SEPARATOR	D-624	V	SIGHT GLASS/ LEVEL CONTROL TOP VALVES	GROUND LEVEL	SSG	15.00	G	N	A	
7234	F	235	2	62	SEPARATOR	D-624	V	SIGHT GLASS/ LEVEL CONTROL TOP VALVES	GROUND LEVEL	SSG	15.00	G	N	A	
7235	F	265	2	62	SEPARATOR	D-624	V	BY PASS TO D-576	LEVEL 2 RECYC	SSG	15.00	G	Y	M	
7236	F	268	2	62	SEPARATOR	D-624	V	BY PASS TO D-576	LEVEL 2 RECYC	SSG	15.00	G	Y	M	
7237	F	264	2	62	SEPARATOR	D-624	V	BY PASS TO D-576	LEVEL 2 RECYC	SSG	15.00	G	Y	M	
7238	F	267	2	62	SEPARATOR	D-624	V	BY PASS TO D-576	LEVEL 2 RECYC	SSG	15.00	G	Y	M	
7239	F	263	2	62	SEPARATOR	D-624	V	BY PASS TO D-576	LEVEL 2 RECYC	SSG	15.00	G	Y	M	
7240	F	266	2	62	SEPARATOR	D-624	V	BY PASS TO D-576	LEVEL 2 RECYC	SSG	15.00	G	Y	M	
7250	F	389	2	62	SEPARATOR	D-624	V	RELIEF VALVE LINE VALVE	LEVEL 2	SSG	15.00	G	Y	M	
7251	F	244	2	62	SEPARATOR	D-624	V	SUB SUB GAS OUT RELIEF VALVE	LEVEL 2	SSG	15.00	G	Y	M	
7252	F	391	2	62	SEPARATOR	D-624	V	PRESSURE TAP LINE VALVE	LEVEL 2	SSG	15.00	G	Y	M	
7253	F	390	2	62	SEPARATOR	D-624	V	PRESSURE TAP LINE VALVE	LEVEL 2	SSG	15.00	G	Y	M	
7254	F	247	2	62	SEPARATOR	D-624	G	SUB SUB GAS OUT PRESSURE GAUGE	LEVEL 2	SSG	15.00	G	Y	M	
7255	F	246	2	62	SEPARATOR	D-624	V	SUB SUB GAS OUT PRESSURE VALVE	LEVEL 2	SSG	15.00	G	Y	M	
7256	F	392	2	62	SEPARATOR	D-624	V	PRESSURE TAP LINE VALVE BLOCK	LEVEL 2	SSG	15.00	G	Y	M	
7257	F	245	2	62	SEPARATOR	D-624	V	SUB SUB GAS OUT BLOCKING VALVE	LEVEL 2	SSG	15.00	G	Y	M	
7258	F	248	2	62	SEPARATOR	D-624	V	SUB SUB GAS OUT VALVE	LEVEL 2	SSG	15.00	G	Y	M	
7259	F	260	2	62	SEPARATOR	D-624	V	BY PASS TO D-576	LEVEL 2	SSG	15.00	G	Y	M	
7260	F	261	2	62	SEPARATOR	D-624	V	BY PASS TO D-576	LEVEL 2	SSG	15.00	G	Y	M	
7261	F	259	2	62	SEPARATOR	D-624	V	BY PASS TO D-576	LEVEL 2	SSG	15.00	G	Y	M	
7265	F	249	2	62	SEPARATOR	D-624	V	SUB SUB GAS OUT VALVE	LEVEL 2 BLEED	SSG	15.00	G	Y	M	
7266	F	252	2	62	SEPARATOR	D-624	V	BY PASS TO D-576	LEVEL 2 BLEED	SSG	15.00	G	Y	M	
7267	F	253	2	62	SEPARATOR	D-624	V	BY PASS TO D-576	LEVEL 2 BLEED	SSG	15.00	G	Y	M	
7268	F	254	2	62	SEPARATOR	D-624	V	BY PASS TO D-576	LEVEL 2 BLEED	SSG	15.00	G	Y	M	
7269	F	255	2	62	SEPARATOR	D-624	V	BY PASS TO D-576	LEVEL 2 BLEED	SSG	15.00	G	Y	M	
7270	F	262	2	62	SEPARATOR	D-624	V	BY PASS TO D-576	LEVEL 2 BLEED	SSG	15.00	G	Y	M	
7271	F	258	2	62	SEPARATOR	D-624	V	BY PASS TO D-576	LEVEL 2 BLEED	SSG	15.00	G	Y	M	
7272	F	251	2	62	SEPARATOR	D-624	V	BY PASS TO D-576	LEVEL 2 BLEED	SSG	15.00	G	Y	M	

ED_002508A_00000396-00027

7273	F	394	2	62	SEPARATOR	D-624	V	PRESSURE TAP LINE VALVE	LEVEL 2 BLEED	SSG	15.00	G	Y	M	
7274	F	250	2	62	SEPARATOR	D-624	G	BY PASS TO D-576 GAUGE	LEVEL 2 BLEED	SSG	15.00	G	Y	M	
7275	F	393	2	62	SEPARATOR	D-624	V	PRESSURE TAP LINE VALVE	LEVEL 2 BLEED	SSG	15.00	G	Y	M	
7280	F	300	2	62	SEPARATOR	D-624	V	SUB SUB GAS OUT ORIFICE PLATE 1 VALVE	LEVEL 3	SSG	15.00	G	Y	M	
7281	F	301	2	62	SEPARATOR	D-624	V	SUB SUB GAS OUT ORIFICE PLATE 1 VALVE	LEVEL 3	SSG	15.00	G	Y	M	
7282	F	306	2	62	SEPARATOR	D-624	V	SUB SUB GAS OUT 3 WAY VALVE	LEVEL 3	SSG	15.00	G	Y	M	
7283	F342		2	62	SEPARATOR	D-624	V	SUB SUB GAS OUT 3 WAY VALVE	LEVEL 3	SSG	15.00	G	Y	M	ADDED 12-95
7284	F	305	2	62	SEPARATOR	D-624	V	SUB SUB GAS OUT 3 WAY VALVE	LEVEL 3	SSG	15.00	G	Y	M	
7285	F	302	2	62	SEPARATOR	D-624	V	SUB SUB GAS OUT ORIFICE 2 VALVE	LEVEL 3	SSG	15.00	G	Y	M	
7286	F	303	2	62	SEPARATOR	D-624	V	SUB SUB GAS OUT ORIFICE 2 VALVE	LEVEL 3	SSG	15.00	G	Y	M	
7287	F	304	2	62	SEPARATOR	D-624	V	SUB SUB GAS OUT VALVE TO CONTROL ROOM 5	LEVEL 3	SSG	15.00	G	Y	M	
7288			2	62	SEPARATOR	D-624	V	#5 CONTROL ROOM BLOCKING VALVE	LEVEL 3	SSG	15.00	G	Y	M	ADDED 12-95

ED_002508A_00000396-00028

TABLE 63
REGISTRATION OF COMPONENTS IN BENZENE SERVICE
LIGHT OIL DECANT AREA

7300	F	022	2	63	LO DECANT	D-604	V	VALVE ON TOP SOUTH SIDE OF TANK		LO	57.63	L	Y	M		
7301	F	041	2	63	LO DECANT	D-604	MH	SOUTH MANWAY SOUTH TANK	MANWAY #4	LO	57.63	L	Y	M		
7302	F	019	2	63	LO DECANT	D-604	G	PRESSURE TAP GAUGE ON FRONT MANWAY	MANWAY #4	LO	57.63	L	Y	M		
7303	F	020	2	63	LO DECANT	D-604	V	PRESSURE TAP VALVE ON FRONT MANWAY	MANWAY #4	LO	57.63	L	Y	M		
7304	F	021	2	63	LO DECANT	D-604	V	VALVE ON FRONT MANWAY	MANWAY #4	LO	57.63	L	Y	M		
7305	F	040	2	63	LO DECANT	D-604	MH	WEST MANWAY SOUTH TANK	MANWAY #4	LO	57.63	L	Y	M		
7306	F	024	2	63	LO DECANT	D-604	V	TRANSFER LINE VALVE	TX LINE #4	LO	57.63	L	Y	M		
7307	F	025	2	63	LO DECANT	D-604	V	TRANSFER LINE VALVE	TX LINE #4	LO	57.63	L	Y	M		
7308	F	026	2	63	LO DECANT	D-604	V	TRANSFER LINE VALVE	TX LINE #4	LO	57.63	L	Y	M		
7309	F	027	2	63	LO DECANT	D-604	V	TRANSFER LINE VALVE	TX LINE #4	LO	57.63	L	Y	M		
7310	F	029	2	63	LO DECANT	D-605	V	CONTAMINATED WATER VALVE	CONT WAT #4	WA	0.20	L	Y	N/A		
7311			2	63	LO DECANT	D-605	V	CONTAMINATED WATER VALVE	CONT WAT #4	WA	0.20	L	Y	N/A	ADDED 12-95	
7312			2	63	LO DECANT	D-604	V	TRANSFER LINE VALVE	TX LINE #4	LO	57.63	L	Y	M	ADDED 12-95	
7313	F	015	2	63	LO DECANT	D-605	V	BOTTOM OF SIGHT GLASS	SITE GLS #4	LO	57.63	L	Y	M		
7314	F	014	2	63	LO DECANT	D-604	V	BOTTOM OF SIGHT GLASS	SITE GLS #4	LO	57.63	L	Y	M		
7315	F	016	2	63	LO DECANT	D-605	V	BOTTOM OF SIGHT GLASS	SITE GLS #4	LO	57.63	L	Y	M		
7316	F	039	2	63	LO DECANT	D-604	MH	NORTH MANWAY SOUTH TANK	MANWAY #4	LO	57.63	L	Y	M		
7317	F	011	2	63	LO DECANT	D-604	V	VALVE ON NORTH SIDE MANWAY	MANWAY #4	LO	57.63	L	Y	M		
7318	F	018	2	63	LO DECANT	D-604	SG	SIGHT GLASS	SITE GLS #4	LO	57.63	L	Y	M		
7319	F	012	2	63	LO DECANT	D-604	V	TOP OF SIGHT GLASS	SITE GLS #4	LO	57.63	L	Y	M		
7320	F	013	2	63	LO DECANT	D-604	V	TOP OF SIGHT GLASS	SITE GLS #4	LO	57.63	L	Y	M		
7321	F	010	2	63	LO DECANT	D-604	V	VALVE TOP NORTH SIDE OF TANK		LO	57.63	L	N	A		
7322	F	030	2	63	LO DECANT	D-604	V	INLET VALVES		LO	57.63	L	Y	M		
7325	F	023	2	63	LO DECANT	D-605	V	VALVE TOP NORTH SIDE OF TANK		LO	57.63	L	Y	M		
7326	F	042	2	63	LO DECANT	D-605	MH	NORTH MANWAY NORTH TANK	MANWAY #5	LO	57.63	L	Y	M		
7327	F	043	2	63	LO DECANT	D-605	MH	WEST MANWAY NORTH TANK	MANWAY #5	LO	57.63	L	Y	M		
7328	F	008	2	63	LO DECANT	D-605	V	DRAIN VALVE		LO	57.63	L	Y	M		
7329	F	009	2	63	LO DECANT	D-605	V	DRAIN VALVE		LO	57.63	L	Y	M		
7330	F	032	2	63	LO DECANT	D-605	V	TRANSFER LINE VALVE	TX LINE #5	LO	57.63	L	Y	M		
7331	F	033	2	63	LO DECANT	D-605	V	TRANSFER LINE VALVE	TX LINE #5	LO	57.63	L	Y	M		
7332	F	034	2	63	LO DECANT	D-605	V	TRANSFER LINE VALVE	TX LINE #5	LO	57.63	L	Y	M		
7333	F	035	2	63	LO DECANT	D-605	V	CONTAMINATED WATER LINE	CONT WAT #5	WA	0.20	L	Y	N/A		
7334	F	038	2	63	LO DECANT	D-605	V	CONTAMINATED WATER LINE	CONT WAT #5	WA	0.20	L	Y	N/A		
7335	F	111	2	63	LO DECANT	D-604/80	V	MAKEUP/DRAIN FOR SEP. LEVEL CONTROLS		LOW	57.63	L	Y	M		
7336	F	004	2	63	LO DECANT	D-605	V	BOTTOM OF SIGHT GLASS	SITE GLS #5	LO	57.63	L	Y	M		
7337	F	006	2	63	LO DECANT	D-605	V	BOTTOM OF SIGHT GLASS	SITE GLS #5	LO	57.63	L	Y	M		
7338	F	005	2	63	LO DECANT	D-605	V	BOTTOM OF SIGHT GLASS	SITE GLS #5	LO	57.63	L	Y	M		
7339	F	044	2	63	LO DECANT	D-605	MH	SOUTH MANWAY NORTH TANK	MANWAY #5	LO	57.63	L	Y	M		
7340	F	003	2	63	LO DECANT	D-605	SG	SIGHT GLASS	SITE GLS #5	LO	57.63	L	Y	M		
7341	F	001	2	63	LO DECANT	D-605	V	TOP OF SIGHT GLASS	SITE GLS #5	LO	57.63	L	Y	M		
7342	F	002	2	63	LO DECANT	D-605	V	TOP OF SIGHT GLASS	SITE GLS #5	LO	57.63	L	Y	M		
7343	F	037	2	63	LO DECANT	D-605	V	INLET VALVES		LO	57.63	L	Y	M		
7344	F	007	2	63	LO DECANT	D-605	V	VALVE TOP SOUTH SIDE OF TANK		LO	57.63	L	N	A		
7350	E	287	2	63	LO DECANT	D-604	VT	RELIEF VALVE	TOP VENT #4	LO	57.63	G	Y	M		
7351	E	288	2	63	LO DECANT	D-604	V	EMERGENCY VENT LINE CLEANOUT	TOP VENT #4	LO	57.63	G	Y	M		
7352	E	289	2	63	LO DECANT	D-604	V	EMERGENCY VENT LINE CLEANOUT	TOP VENT #4	LO	57.63	G	Y	M		
7353	E	279	2	63	LO DECANT	D-604	V	VENT SYSTEM BLOCKING VALVE	TOP VENT #4	LO	57.63	G	Y	M		
7354	E	291	2	63	LO DECANT	D-604	V	EMERGENCY VENT LINE CLEANOUT	TOP VENT #4	LO	57.63	G	Y	M		
7360	E	535	2	63	DECANTERS	D-605	V	RELIEF VALVE LINE CLEANOUT	TOP VENT #5	LO	57.63	G	Y	M		
7361	E	280	2	63	LO DECANT	D-605	V	VENT SYSTEM BLOCKING VALVE	TOP VENT #5	LO	57.63	G	Y	M		
7362	E	536	2	63	DECANTERS	D-605	V	RELIEF VALVE LINE CLEANOUT	TOP VENT #5	LO	57.63	G	Y	M		

ED_002508A_00000396-00029

7363	E	281	2	63	LO DECANT	D-605	V	CLEANOUT VALVE BEFORE RELIEF VALVE	TOP VENT #5	LO	57.63	G	Y	M	
7364	E	282	2	63	LO DECANT	D-605	V	CLEANOUT VALVE BEFORE RELIEF VALVE	TOP VENT #5	LO	57.63	G	Y	M	
7365	E	283	2	63	LO DECANT	D-605	VT	RELIEF VALVE	TOP VENT #5	LO	57.63	G	Y	M	
7366	E	285	2	63	LO DECANT	D-605	V	CLEANOUT VALVE AFTER RELIEF VALVE	TOP VENT #5	LO	57.63	G	Y	M	
7370			2	63	LO DECANT	D-604/5	V	MAKEUP/DRAIN FOR SEP. LEVEL CONTROLS	LEVL CONTR	LO	57.63	G	Y	M	ADDED 12-95
7371			2	63	LO DECANT	D-604/5	V	MAKEUP/DRAIN FOR SEP. LEVEL CONTROLS	LEVL CONTR	LO	57.63	G	Y	M	ADDED 12-95
7372			2	63	LO DECANT	D-604/5	V	MAKEUP/DRAIN FOR SEP. LEVEL CONTROLS	LEVL CONTR	LO	57.63	G	Y	M	ADDED 12-95
7373	F	120	2	63	LO DECANT	D-604/5	V	MAKEUP/DRAIN FOR SEP. LEVEL CONTROLS	LEVL CONTR	LOW	57.63	L	Y	M	
7374	F	121	2	63	LO DECANT	D-604/5	V	MAKEUP/DRAIN FOR SEP. LEVEL CONTROLS	LEVL CONTR	LOW	57.63	L	Y	M	
7375	F	129	2	63	LO DECANT	D-604/5	V	MAKEUP/DRAIN FOR SEP. LEVEL CONTROLS	LEVL CONTR	LOW	57.63	L	Y	M	
7376	F	122	2	63	LO DECANT	D-604/5	V	MAKEUP/DRAIN FOR SEP. LEVEL CONTROLS	LEVL CONTR	LOW	57.63	L	Y	M	
7377	F	123	2	63	LO DECANT	D-604/5	V	MAKEUP/DRAIN FOR SEP. LEVEL CONTROLS	LEVL CONTR	LOW	57.63	L	Y	M	
7378	F	124	2	63	LO DECANT	D-604/5	V	MAKEUP/DRAIN FOR SEP. LEVEL CONTROLS	LEVL CONTR	LOW	57.63	L	Y	M	
7379	F	125	2	63	LO DECANT	D-604/5	V	MAKEUP/DRAIN FOR SEP. LEVEL CONTROLS	LEVL CONTR	LOW	57.63	L	Y	M	
7380	F	126	2	63	LO DECANT	D-604/5	V	MAKEUP/DRAIN FOR SEP. LEVEL CONTROLS	LEVL CONTR	LOW	57.63	L	Y	M	
7381	F	127	2	63	LO DECANT	D-604/5	V	MAKEUP/DRAIN FOR SEP. LEVEL CONTROLS	LEVL CONTR	LOW	57.63	L	Y	M	
7382			2	63	LO DECANT	D-604/5	V	MAKEUP/DRAIN FOR SEP. LEVEL CONTROLS	LEVL CONTR	LOW	57.63	L	Y	M	
7383	F	128	2	63	LO DECANT	D-604/5	V	MAKEUP/DRAIN FOR SEP. LEVEL CONTROLS	LEVL CONTR	LOW	57.63	L	Y	M	

ED_002508A_00000396-00030

TABLE 64
REGISTRATION OF COMPONENTS IN BENZENE SERVICE
LIGHT OIL TRANSFER PUMP AREA

7400	F	070	2	64	LO PUMP	ALL 3	V	LO TRANSFER LINE INLET CLEANOUT	1ST LEVL IN	LO	57.63	L	Y	M	
7401	F	071	2	64	LO PUMP	ALL 3	V	LO TRANSFER LINE INLET	1ST LEVL IN	LO	57.63	L	Y	M	
7402	F	072	2	64	LO PUMP	ALL 3	V	LO TRANSFER LINE INLET CLEANOUT	1ST LEVL IN	LO	57.63	L	Y	M	
7403	F	069	2	64	LO PUMP	ALL 3	V	LO TRANSFER LINE PRESSURE TAP VALVE	1ST LEVL IN	LO	57.63	L	Y	M	
7404			2	64	LO PUMP	ALL 3	G	LO TRANSFER LINE PRESSURE GAUGE	1ST LEVL IN	LO	57.63	L	Y	M	ADDED 12-95
7405	F	074	2	64	LO PUMP	ALL 3	V	LO TRANSFER LINE INLET	1ST LEVL IN	LO	57.63	L	Y	M	
7406	F	073	2	64	LO PUMP	ALL 3	V	LO TRANSFER LINE INLET CLEANOUT	1ST LEVL IN	LO	57.63	L	Y	M	
7407			2	64	LO PUMP	ALL 3	V	LO TRANSFER LINE INLET	1ST LEVL IN	LO	57.63	L	Y	M	ADDED 12-95
7407	F	068	2	64	LO PUMP	ALL 3	V	LO TRANSFER LINE		LO	57.63	L	Y	M	
7408	F	065	2	64	LO PUMP	ALL 3	V	LO TRANSFER LINE INLET	1ST LEVL IN	LO	57.63	L	Y	M	
7409	F	066	2	64	LO PUMP	P-619C	V	LO TRANSFER LINE INLET CLEANOUT	1ST LEVL IN	LO	57.63	L	Y	M	
7410			2	64	LO PUMP	ALL 3	V	LO TRANSFER LINE INLET	1ST LEVL IN	LO	57.63	L	Y	M	ADDED 12-95
7415	F	075	2	64	LO PUMP	P-619B	P	MAGNETIC PUMP SEAL	1ST LEVL PMP	LO	57.63	L	Y	M	
7416	F	076	2	64	LO PUMP	P-619A	P	MAGNETIC PUMP SEAL	1ST LEVL PMP	LO	57.63	L	Y	M	
7417	F	077	2	64	LO PUMP	P-619-C	P	MAGNETIC PUMP SEAL	1ST LEVL PMP	LO	57.63	L	Y	M	
7420			2	64	LO PUMP	P-619-B	V	PUMP DISCHARGE BLOCKING VALVE	1ST LEVL OUT	LO	57.63	L	Y	M	ADDED 12-95
7421			2	64	LO PUMP	P-619-B	V	PUMP DISCHARGE BLOCKING VALVE	1ST LEVL OUT	LO	57.63	L	Y	M	ADDED 12-95
7422	F	081	2	64	LO PUMP	ALL 3	V	LO TRANSFER LINE	1ST LEVL OUT	LO	57.63	L	Y	M	
7423	F	082	2	64	LO PUMP	ALL 3	V	LO TRANSFER LINE	1ST LEVL OUT	LO	57.63	L	Y	M	
7424			2	64	LO PUMP	P-619-B	V	PUMP DISCHARGE PRESSURE GAUGE	1ST LEVL OUT	LO	57.63	L	Y	M	ADDED 12-95
7425			2	64	LO PUMP	P-619-B	G	PUMP DISCHARGE PRESSURE TAP VALVE	1ST LEVL OUT	LO	57.63	L	Y	M	ADDED 12-95
7426	F	079	2	64	LO PUMP	ALL 3	V	LO TRANSFER LINE	1ST LEVL OUT	LO	57.63	L	Y	M	
7427	F	080	2	64	LO PUMP	ALL 3	V	LO TRANSFER LINE	1ST LEVL OUT	LO	57.63	L	Y	M	
7428	F	095	2	64	LO PUMP	ALL 3	V	LO TRANSFER LINE	1ST LEVL OUT	LO	57.63	L	Y	M	
7429	F	090	2	64	LO PUMP	P-619C	V	LO SAMPLE LINE VALVE	1ST LEVL OUT	LO	57.63	L	Y	M	
7430	F	084	2	64	LO PUMP	ALL 3	V	LO TRANSFER LINE	1ST LEVL OUT	LO	57.63	L	Y	M	
7431	F	085	2	64	LO PUMP	ALL 3	V	LO TRANSFER LINE	1ST LEVL OUT	LO	57.63	L	Y	M	
7432			2	64	LO PUMP	P-619A	V	PUMP DISCHARGE PRESSURE TAP VALVE	1ST LEVL OUT	LO	57.63	L	Y	M	ADDED 12-95
7433			2	64	LO PUMP	P-619A	G	PUMP DISCHARGE PRESSURE GAUGE	1ST LEVL OUT	LO	57.63	L	Y	M	ADDED 12-95
7434	F	083	2	64	LO PUMP	ALL 3	FC	LO FLOW CONTROL	1ST LEVL OUT	LO	57.63	L	Y	M	
7435	F	088	2	64	LO PUMP	P-619C	V	LO SAMPLE LINE VALVE	1ST LEVL OUT	LO	57.63	L	Y	M	
7436	F	089	2	64	LO PUMP	P-619C	V	LO SAMPLE LINE VALVE	1ST LEVL OUT	LO	57.63	L	Y	M	
7547			2	64	LO PUMP	P-619C	V	LO SAMPLE LINE PRESSURE TAP	1ST LEVL OUT	LO	57.63	L	Y	M	
7438			2	64	LO PUMP	P-619C	V	LO SAMPLE LINE PRESSURE TAP	1ST LEVL OUT	LO	57.63	L	Y	M	
7439			2	64	LO PUMP	P-619C	G	LO SAMPLE LINE PRESSURE GAUGE	1ST LEVL OUT	LO	57.63	L	Y	M	
7440	F	087	2	64	LO PUMP	P-619C	V	LO CHECK VALVE	1ST LEVL OUT	LO	57.63	L	Y	M	
7441	F	067	2	64	LO PUMP	P-619C	V	LO TRANSFER LINE	1ST LEVL OUT	LO	57.63	L	Y	M	
7442	F	086	2	64	LO PUMP	P-619C	V	LO TRANSFER LINE	1ST LEVL OUT	LO	57.63	L	Y	M	
7450	F	096	2	64	LO PUMP	ALL 3	V	LO TRANSFER LINE	2ND LEVL OUT	LO	57.63	L	Y	M	
7451	F	097	2	64	LO PUMP	ALL 3	V	LO TRANSFER LINE	2ND LEVL OUT	LO	57.63	L	Y	M	
7452	F	098	2	64	LO PUMP	ALL 3	V	LO TRANSFER LINE	2ND LEVL OUT	LO	57.63	L	Y	M	
7453	F	100	2	64	LO PUMP	ALL 3	V	LO TRANSFER LINE TO QUADS CLEANOUT	2ND LEVL QDS	LO	57.63	L	Y	M	
7454	F	101	2	64	LO PUMP	ALL 3	V	LO TRANSFER LINE TO QUADS	2ND LEVL QDS	LO	57.63	L	Y	M	
7455	F	102	2	64	LO PUMP	ALL 3	V	LO TRANSFER LINE TO QUADS	2ND LEVL QDS	LO	57.63	L	Y	M	
7456	F	103	2	64	LO PUMP	ALL 3	V	LO TRANSFER LINE TO QUADS	2ND LEVL QDS	LO	57.63	L	Y	M	
7457	F	105	2	64	LO PUMP	ALL 3	V	LO TRANSFER LINE TO QUADS	2ND LEVL QDS	LO	57.63	L	Y	M	
7458	F	104	2	64	LO PUMP	ALL 3	V	LO TRANSFER LINE TO QUADS	2ND LEVL QDS	LO	57.63	L	Y	M	
7459	F	099	2	64	LO PUMP	ALL 3	V	LO TRANSFER LINE TO QUADS	2ND LEVL	LO	57.63	L	Y	M	
7460	F	108	2	64	LO PUMP	ALL 3	V	LO TRANSFER LINE TO CR #1	2ND LEVL CR#1	LO	57.63	L	Y	M	
7461	F	109	2	64	LO PUMP	ALL 3	V	LO TRANSFER LINE TO CR #1	2ND LEVL CR#1	LO	57.63	L	Y	M	
7462	F	117	2	64	LO PUMP	ALL 3	V	LO TRANSFER LINE TO CR #1	2ND LEVL CR#1	LO	57.63	L	Y	M	

ED_002508A_00000396-00031

7463	F	116	2	64	LO PUMP	ALL 3	V	LO TRANSFER LINE TO CR #1	2ND LEVL CR#1	LO	57.63	L	Y	M	
7464	F	118	2	64	LO PUMP	ALL 3	V	LO TRANSFER LINE TO CR #1	2ND LEVL CR#1	LO	57.63	L	Y	M	
7470	F	107	2	64	LO PUMP	ALL 3	V	LO TRANSFER LINE TO DECANTERS	2ND LEVL DCT	LO	57.63	L	Y	M	
7471	F	108	2	64	LO PUMP	ALL 3	V	LO TRANSFER LINE TO DECANTERS	2ND LEVL DCT	LO	57.63	L	Y	M	
7472	F	114	2	64	LO PUMP	ALL 3	V	LO TRANSFER LINE TO DECANTERS	2ND LEVL DCT	LO	57.63	L	Y	M	
7473	F	115	2	64	LO PUMP	ALL 3	V	LO TRANSFER LINE TO DECANTERS	2ND LEVL DCT	LO	57.63	L	Y	M	
7474			2	64	LO PUMP	ALL 3	V	LO TRANSFER LINE TO DECANTERS CLEANOUT	2ND LEVL DCT	LO	57.63	L	Y	M	ADDED 12-95
7475			2	64	LO PUMP	ALL 3	V	LO TRANSFER LINE TO DECANTERS	2ND LEVL DCT	LO	57.63	L	Y	M	ADDED 12-95
7476			2	64	LO PUMP	ALL 3	V	LO TRANSFER LINE TO DECANTERS	2ND LEVL DCT	LO	57.63	L	Y	M	ADDED 12-95
7477			2	64	LO PUMP	ALL 3	V	LO TRANSFER LINE TO DECANTERS	2ND LEVL DCT	LO	57.63	L	Y	M	ADDED 12-95
7478			2	64	LO PUMP	ALL 3	V	LO TRANSFER LINE TO DECANTERS	2ND LEVL DCT	LO	57.63	L	Y	M	ADDED 12-95
7479			2	64	LO PUMP	ALL 3	V	LO TRANSFER LINE TO DECANTERS CLEANOUT	2ND LEVL DCT	LO	57.63	L	Y	M	ADDED 12-95
7480			2	64	LO PUMP	ALL 3	V	LO TRANSFER LINE TO DECANTERS	2ND LEVL DCT	LO	57.63	L	Y	M	ADDED 12-95
7481	F	110	2	64	LO PUMP	ALL 3	V	LO TRANSFER LINE TO DECANTERS	2ND LEVL DCT	LO	57.63	L	Y	M	
7482	F	112	2	64	LO PUMP	ALL 3	V	LO TRANSFER LINE TO DECANTERS	2ND LEVL DCT	LO	57.63	L	Y	M	
7483	F	113	2	64	LO PUMP	ALL 3	V	LO TRANSFER LINE TO DECANTERS	2ND LEVL DCT	LO	57.63	L	Y	M	
7484	F111		2	64	LO PUMP	ALL 3	V	LO TRANSFER LINE TO DECANTERS BLOCKING	2ND LEVL DCT	LO	57.63	L	Y	M	ADDED 12-95
7485	F38		2	64	LO PUMP	ALL 3	V	LO TRANSFER LINE INLET	2ND LEVL	LO	57.63	L	Y	M	ADDED 12-95

TABLE 65
REGISTRATION OF COMPONENTS IN BENZENE SERVICE
ARISTECH TRANSFER LINE AREAS

7500			2	65	BLOWDOWN	B-426	V	BLOCKING VALVE METHANOL TRANSFER LINE	GRND BY R-490	LOM	57.63	L	Y	M	ADDED 12-95
7501	D	424	2	65	BLOWDOWN	B-426	V	CLEANOUT VALVE METHANOL TRANSFER LINE	GRND BY R-490	LOM	57.63	L	Y	M	
7502	D	425	2	65	BLOWDOWN	B-426	V	CLEANOUT VALVE METHANOL TRANSFER LINE	GRND BY R-490	LOM	57.63	L	Y	M	
7503			2	65	BLOWDOWN	B-426	V	CLEANOUT VALVE METHANOL TRANSFER LINE	GRND BY R-490	LOM	57.63	L	Y	M	ADDED 12-95
7504	D	423	2	65	BLOWDOWN	B-426	V	CLEANOUT VALVE METHANOL TRANSFER LINE	GRND BY R-490	LOM	57.63	L	Y	M	
7505	D	427	2	65	BLOWDOWN	B-426	V	BLOCKING VALVE METHANOL TRANSFER LINE	GRND BY R-490	LOM	57.63	L	Y	M	
7506	D	426	2	65	BLOWDOWN	B-426	V	CLEANOUT VALVE METHANOL TRANSFER LINE	GRND BY R-490	LOM	57.63	L	Y	M	
7507	D	428	2	65	BLOWDOWN	B-426	V	BLOCKING VALVE METHANOL TRANSFER LINE	GRND BY R-490	LOM	57.63	L	Y	M	
7508	E	001	2	65	BLOWDOWN	B-426	V	CLEAN OUT VALVE METHANOL TRANSFER LINE	GRND BY R-490	LOM	57.63	L	Y	M	
7509	D	429	2	65	BLOWDOWN	B-426	V	CLEANOUT VALVE METHANOL TRANSFER LINE	GRND BY R-490	LOM	57.63	L	Y	M	
7510			2	65	BLOWDOWN	B-426	G	METHANOL TRANSFER LINE PRESSURE GAUGE	GRND BY R-490	LOM	57.63	L	Y	M	ADDED 12-95
7511	D	430	2	65	BLOWDOWN	B-426	V	CLEANOUT VALVE METHANOL TRANSFER LINE	GRND BY R-490	LOM	57.63	L	Y	M	
7512	D	431	2	65	BLOWDOWN	B-426	V	BLOCKING VALVE METHANOL TRANSFER LINE	GRND BY R-490	LOM	57.63	L	Y	M	
7520	F	369	2	65	LO STORE	TRANSF	V	BLOCKING VALVES LO STORAGE TANKS	RACK RW TNK	LO	57.63	L	N	A	
7521	F	368	2	65	LO STORE	TRANSF	V	BLOCKING VALVES LO STORAGE TANKS	RACK RW TNK	LO	57.63	L	N	A	
7522	F	367	2	65	LO STORE	TRANSF	V	BLOCKING VALVES LO STORAGE TANKS	RACK RW TNK	LO	57.63	L	N	A	
7523	F	366	2	65	LO STORE	TRANSF	V	BLOCKING VALVES LO STORAGE TANKS	RACK RW TNK	LO	57.63	L	N	A	
7540	F	343	2	65	LO HEATER	TRANSF	V	LO TRANSFER HEATER 1 BLOCKING VALVE	RACK E OF BND	LO	57.63	L	N	A	
7541	F	344	2	65	LO HEATER	TRANSF	V	LINE VALVE LO TRANSFER HEATER 1	RACK E OF BND	LO	57.63	L	N	A	
7542	F	345	2	65	LO HEATER	TRANSF	V	LO TRANSFER HEATER 1 CLEANOUT VALVE	RACK E OF BND	LO	57.63	L	N	A	
7543	F	346	2	65	LO HEATER	TRANSF	V	LO TRANSFER HEATER 1 CLEANOUT VALVE	RACK E OF BND	LO	57.63	L	N	A	
7544	F	347	2	65	LO HEATER	TRANSF	V	LINE VALVE LO TRANSFER HEATER 1	RACK E OF BND	LO	57.63	L	N	A	
7545	F	348	2	65	LO HEATER	TRANSF	V	LO TRANSFER HEATER 1 BLOCKING VALVE	RACK E OF BND	LO	57.63	L	N	A	
7560	F	359	2	65	LO HEATER	TRANSF	V	LO TRANSFER HEATER 2 LINE CLEANOUT VALVE	RACK SW OFFC	LO	57.63	L	Y	M	
7561	F	360	2	65	LO HEATER	TRANSF	V	LO TRANSFER HEATER 2 BLOCKING VALVE	RACK SW OFFC	LO	57.63	L	Y	M	
7562			2	65	LO HEATER	TRANSF	G	LO TRANSFER HEATER 2 GAUGE	RACK SW OFFC	LO	57.63	L	Y	M	ADDED 12-95
7563	F	362	2	65	LO HEATER	TRANSF	V	LO TRANSFER HEATER 2 VALVE	RACK SW OFFC	LO	57.63	L	Y	M	
7564	F	384	2	65	LO HEATER	TRANSF	G	LO TRANSFER HEATER 2 GAUGE	RACK SW OFFC	LO	57.63	L	Y	M	
7565	F	361	2	65	LO HEATER	TRANSF	V	LINE VALVE LO TRANSFER HEATER 2	RACK SW OFFC	LO	57.63	L	Y	M	
7566	F	363	2	65	LO HEATER	TRANSF	V	LO TRANSFER HEATER 2 VALVE	RACK SW OFFC	LO	57.63	L	Y	M	
7580	F	357	2	65	LO HEATER	TRANSF	G	PRESSURE GAUGE LO TRANSFER HEATER 3	NEAR TARBEN	LO	57.63	L	Y	M	
7581	F	356	2	65	L0 HEATER	TRANSF	V	LO TRANSFER HEATER 3 BLOCKING VALVE	NEAR TARBEN	LO	57.63	L	Y	M	
7582	F	358	2	65	LO HEATER	TRANSF	V	LINE VALVE LO TRANSFER HEATER 3	NEAR TARBEN	LO	57.63	L	Y	M	
7583	F	353	2	65	LO HEATER	TRANSF	V	RELIEF BYPASS LO TRANSFER HEATER 3	NEAR TARBEN	LO	57.63	L	Y	M	
7584	F	351	2	65	LO HEATER	TRANSF	V	BLOCKING VALVE TO RELIEF LO HEATER 3	NEAR TARBEN	LO	57.63	L	Y	M	
7585	F	352	2	65	LO HEATER	TRANSF	V	RELIEF VALVE LO TRANSFER HEATER 3	NEAR TARBEN	LO	57.63	L	Y	M	
7586	F	355	2	65	LO HEATER	TRANSF	G	LO TRANSFER HEATER 3 GAUGE	NEAR TARBEN	LO	57.63	L	Y	M	
7587	F	350	2	65	LO HEATER	TRANSF	V	CLEANOUT VALVE LO TRANSFER HEATER 3	NEAR TARBEN	LO	57.63	L	Y	M	
7588	F	349	2	65	LO HEATER	TRANSF	V	CLEANOUT VALVE LO TRANSFER HEATER 3	NEAR TARBEN	LO	57.63	L	Y	M	

ED_002508A_00000396-00033

TABLE 66
REGISTRATION OF COMPONENTS IN BENZENE SERVICE
LIGHT OIL WASH HEAT EXCHANGER

8000			2	66	COOLER	E-424	V	LO WASH COOLING LOOP CLEANOUT VALVE	HT EXC AREA	LOM	57.63	L	Y	MIU	LO WASH, ADDED 12-95
8001	E	024	2	66	COOLER	E-424	V	LO WASH COOLING LOOP CLEANOUT VALVE	HT EXC AREA	LOM	57.63	L	Y	MIU	LO WASH
8002	D	498	2	66	COOLER	E-424	V	LO WASH COOLING LOOP CLEANOUT VALVE	HT EXC AREA	LOM	57.63	L	Y	MIU	LO WASH
8003			2	66	COOLER	E-424	V	LO WASH COOLING LOOP BLOCKING VALVE	HT EXC AREA	LOM	57.63	L	Y	MIU	LO WASH, ADDED 12-95
8004			2	66	COOLER	E-424	V	LO WASH COOLING LOOP CLEANOUT VALVE	HT EXC AREA	LOM	57.63	L	Y	MIU	LO WASH, ADDED 12-95
8005	D	497	2	66	COOLER	E-424	V	LO WASH COOLING LOOP SUMP LINE BLOCKING VAL	HT EXC AREA	LOM	57.63	L	Y	MIU	LO WASH
8006	D	499	2	66	COOLER	E-424	V	LO WASH COOLING LOOP SUMP LINE BLOCKING VAL	HT EXC AREA	LOM	57.63	L	Y	MIU	LO WASH
8007	E	023	2	66	COOLER	E-424	V	LO WASH COOLING LOOP SUMP VALVE	HT EXC AREA	LOM	57.63	L	Y	MIU	LO WASH
8008	E	022	2	66	COOLER	E-424	G	LO WASH SUMP LINE PRESSURE GAUGE	HT EXC AREA	LOM	57.63	L	Y	MIU	LO WASH
8009	D	496	2	66	COOLER	E-424	V	LO WASH COOLING LOOP CLEANOUT VALVE	HT EXC AREA	LOM	57.63	L	Y	MIU	LO WASH
8010	E	021	2	66	COOLER	E-424	V	LO WAS COOLING LOOP FLOW RESTRICTER	HT EXC AREA	LOM	57.63	L	Y	MIU	LO WASH
8011	E	020	2	66	COOLER	E-424	V	LO WASH COOLING LOOP BLOCKING VALVE	HT EXC AREA	LOM	57.63	L	Y	MIU	LO WASH
8012	E	019	2	66	COOLER	E-424	V	LO WASH COOLING LOOP BLOCKING VALVE	HT EXC AREA	LOM	57.63	L	Y	MIU	LO WASH
8013			2	66	COOLER	E-424	V	LO WASH COOLING LOOP CLEANOUT VALVE	HT EXC AREA	LOM	57.63	L	Y	MIU	LO WASH, ADDED 12-95

ED_002508A_00000396-00034

TABLE 67
REGISTRATION OF COMPONENTS IN BENZENE SERVICE
LIGHT OIL WASH BLOWDOWN TANK AREA

8100	D	477	2	67	BLOWDOWN	B-426	V	LO WASH	TANK AREA	LOM	57.63	L	Y	MIU	LO WASH
8102	D	476	2	67	BLOWDOWN	B-426	V	LO WASH	TANK AREA	LOM	57.63	L	Y	MIU	LO WASH
8103	D	461	2	67	BLOWDOWN	B-426	V	LO WASH	TANK AREA	LOM	57.63	L	Y	MIU	LO WASH
8104	D	460	2	67	BLOWDOWN	B-426	V	LO WASH	TANK AREA	LOM	57.63	L	Y	MIU	LO WASH
8105	D	463	2	67	BLOWDOWN	B-426	V	LO WASH	TANK AREA	LOM	57.63	L	Y	MIU	LO WASH
8106	D	464	2	67	BLOWDOWN	B-426	V	LO WASH	TANK AREA	LOM	57.63	L	Y	MIU	LO WASH
8107	D	462	2	67	BLOWDOWN	B-426	V	LO WASH	TANK AREA	LOM	57.63	L	Y	MIU	LO WASH
8108	D	456	2	67	BLOWDOWN	B-426	V	LO WASH	TANK AREA	LOM	57.63	L	Y	MIU	LO WASH
8109	D	457	2	67	BLOWDOWN	B-426	V	LO WASH	TANK AREA	LOM	57.63	L	Y	MIU	LO WASH
8110	D	458	2	67	BLOWDOWN	B-426	V	LO WASH	TANK AREA	LOM	57.63	L	Y	MIU	LO WASH
8111	E	029	2	67	BLDWN TNK	D-425	V	SIGHT GLASS DRAIN VALVE	TANK AREA	LOM	57.63	L	Y	MIU	LO WASH
8125	E	008	2	67	BLDWN TNK	D-425	V	LO WASH VALVE LO WASH RETURN	TANK AREA	LOM	57.63	L	Y	MIU	LO WASH
8126	E	009	2	67	BLDWN TNK	D-425	V	LO WASH VALVE LO RETURN	TANK AREA	LOM	57.63	L	Y	MIU	LO WASH
8127	E	010	2	67	BLDWN TNK	D-425	V	LO WASH VALVE TOP BACK LEVEL CONTROL	TANK AREA	LOM	57.63	L	Y	MIU	LO WASH
8128	E	011	2	67	BLDWN TNK	D-425	V	LO WASH VALVE TOP BACK LEVEL CONTROL	TANK AREA	LOM	57.63	L	Y	MIU	LO WASH
8129	E	018	2	67	BLDWN TNK	D-425	V	LO WASH VALVE BACK LEVEL CONTROL DRAIN	TANK AREA	LOM	57.63	L	Y	MIU	LO WASH
8130	D	492	2	67	BLOWDOWN	B-426	V	LO WASH	TANK AREA	LOM	57.63	L	Y	MIU	LO WASH
8131	E	013	2	67	BLDWN TNK	D-425	V	LO WASH VALVE BACK LEVEL CONTROL	TANK AREA	LOM	57.63	L	Y	MIU	LO WASH
8132	D	494	2	67	BLOWDOWN	B-426	V	LO WASH	TANK AREA	LOM	57.63	L	Y	MIU	LO WASH
8133	D	491	2	67	BLOWDOWN	B-426	V	LO WASH	TANK AREA	LOM	57.63	L	Y	MIU	LO WASH
8134	D	493	2	67	BLOWDOWN	B-426	V	LO WASH	TANK AREA	LOM	57.63	L	Y	MIU	LO WASH
8135	E	428	2	67	BLOW DOWN	D-425	V	BLOWDOWN TANK DRAIN	TANK AREA	LOM	57.63	L	Y	MIU	LO WASH
8136	E	387	2	67	BLOW DOWN	D-425	V	BLOWDOWN TANK DRAIN	TANK AREA	LOM	57.63	L	Y	MIU	LO WASH
8137	E	386	2	67	BLOW DOWN	D-425	V	BLOW DOWN TANK DRAIN	TANK AREA	LOM	57.63	L	Y	MIU	LO WASH
8138	E	429	2	67	BLOW DOWN	D-425	V	BLOW DOWN TANK DRAIN	TANK AREA	LOM	57.63	L	Y	MIU	LO WASH
8150	D	439	2	67	BLOWDOWN	B-426	V	LO WASH	TANK AREA	LOM	57.63	L	Y	MIU	LO WASH
8151	D	448	2	67	BLOWDOWN	B-426	V	LO WASH	TANK AREA	LOM	57.63	L	Y	MIU	LO WASH
8152	E	030	2	67	BLDWN TNK	D-425	SG	BLOW DOWN TANK SIGHT GLASS	TANK AREA	LOM	57.63	L	Y	MIU	LO WASH
8153	D	447	2	67	BLOWDOWN	B-426	V	LO WASH	TANK AREA	LOM	57.63	L	Y	MIU	LO WASH
8154	D	446	2	67	BLOWDOWN	B-426	V	LO WASH	TANK AREA	LOM	57.63	L	Y	MIU	LO WASH
8155	D	445	2	67	BLOWDOWN	B-426	V	LO WASH	TANK AREA	LOM	57.63	L	Y	MIU	LO WASH
8156	D	442	2	67	BLOWDOWN	B-426	V	LO WASH	TANK AREA	LOM	57.63	L	Y	MIU	LO WASH
8157	D	440	2	67	BLOWDOWN	B-426	V	LO WASH	TANK AREA	LOM	57.63	L	Y	MIU	LO WASH
8175	D	436	2	67	BLOWDOWN	B-426	V	LO WASH	TANK AREA	LOM	57.63	L	Y	MIU	LO WASH
8176	D	437	2	67	BLOWDOWN	B-426	V	LO WASH	TANK AREA	LOM	57.63	L	Y	MIU	LO WASH
8177	D	441	2	67	BLOWDOWN	B-426	V	LO WASH	TANK AREA	LOM	57.63	L	Y	MIU	LO WASH
8178	E	005	2	67	BLDWN TNK	D-425	V	LO WASH VALVE OPEN END FLOW CONTROLER	TANK AREA	LOM	57.63	L	Y	MIU	LO WASH
8179	D	434	2	67	BLOWDOWN	B-426	V	LO WASH	TANK AREA	LOM	57.63	L	Y	MIU	LO WASH
8180	E	004	2	67	BLDWN TNK	D-425	V	LO WASH VALVE OPEN END FLOW CONTROLER	TANK AREA	LOM	57.63	L	Y	MIU	LO WASH
8181	D	435	2	67	BLOWDOWN	B-426	V	LO WASH	TANK AREA	LOM	57.63	L	Y	MIU	LO WASH
8182	D	444	2	67	BLOWDOWN	B-426	V	LO WASH	TANK AREA	LOM	57.63	L	Y	MIU	LO WASH
8183	E	006	2	67	BLDWN TNK	D-425	V	LO WASH VALVE COLD SEP LPD FLOW CONTROLER	TANK AREA	LOM	57.63	L	Y	MIU	LO WASH
8184	D	443	2	67	BLOWDOWN	B-426	V	LO WASH	TANK AREA	LOM	57.63	L	Y	MIU	LO WASH
8185	D	433	2	67	BLOWDOWN	B-426	V	LO WASH	TANK AREA	LOM	57.63	L	Y	MIU	LO WASH
8186	D	432	2	67	BLOWDOWN	B-426	V	LO WASH	TANK AREA	LOM	57.63	L	Y	MIU	LO WASH
8187	E	002	2	67	BLDWN TNK	D-425	V	LO WASH VALVE OLD LPD OUT OF SERVICE	TANK AREA	LOM	57.63	L	Y	MIU	LO WASH
8188	E	003	2	67	BLDWN TNK	D-425	V	LO WASH VALVE OLD LPD FLOW CONTROLER	TANK AREA	LOM	57.63	L	Y	MIU	LO WASH

ED_002508A_00000396-00035

TABLE 68
REGISTRATION OF COMPONENTS IN BENZENE SERVICE
LIGHT OIL WASH BLOWDOWN PUMPS

8200	D	473	2	68	BLOWDOWN	B-426	V	LO WASH	PUMP AREA	LOM	57.63	L	Y	MU	LO WASH
8201	D	474	2	68	BLOWDOWN	B-426	V	LO WASH	PUMP AREA	LOM	57.63	L	Y	MU	LO WASH
8202	D	485	2	68	BLOWDOWN	B-426	V	LO WASH	PUMP AREA	LOM	57.63	L	Y	MU	LO WASH
8203	D	489	2	68	BLOWDOWN	P-425	P	LO TRANSFER PUMP SEAL	PUMP AREA	LOM	57.63	L	Y	MU	LO WASH
8204	D	467	2	68	BLOWDOWN	B-426	V	LO WASH	PUMP AREA	LOM	57.63	L	Y	MU	LO WASH
8205	D	471	2	68	BLOWDOWN	B-426	V	LO WASH	PUMP AREA	LOM	57.63	L	Y	MU	LO WASH
8206	D	468	2	68	BLOWDOWN	B-426	V	LO WASH	PUMP AREA	LOM	57.63	L	Y	MU	LO WASH
8207	D	466	2	68	BLOWDOWN	B-426	V	LO WASH	PUMP AREA	LOM	57.63	L	Y	MU	LO WASH
8208	D	470	2	68	BLOWDOWN	B-426	V	LO WASH	PUMP AREA	LOM	57.63	L	Y	MU	LO WASH
8209	D	481	2	68	BLOWDOWN	B-426	V	LO WASH	PUMP AREA	LOM	57.63	L	Y	MU	LO WASH
8215	E	027	2	68	BLDWN TNK	B-426	V	LO WASH	PUMP AREA	LOM	57.63	L	Y	MU	LO WASH
8216	D484		2	68	BLDWN TNK	B-426	V	LO WASH	PUMP AREA	LOM	57.63	L	Y	MU	LO WASH
8217	D	485	2	68	BLOWDOWN	B-426	V	LO WASH	PUMP AREA	LOM	57.63	L	Y	MU	LO WASH, ADDED 12-95
8218	D	486	2	68	BLOWDOWN	B-426	V	LO WASH	PUMP AREA	LOM	57.63	L	Y	MU	LO WASH
8219	D	490	2	68	BLOWDOWN	P-426	P	LO TRANSFER PUMP SEAL	PUMP AREA	LOM	57.63	L	Y	MU	LO WASH
8220	D	487	2	68	BLOWDOWN	B-426	V	LO WASH	PUMP AREA	LOM	57.63	L	Y	MU	LO WASH
8221	D	488	2	68	BLOWDOWN	B-426	V	LO WASH	PUMP AREA	LOM	57.63	L	Y	MU	LO WASH
8222	E	028	2	68	BLDWN TNK	B-426	V	LO WASH	PUMP AREA	LOM	57.63	L	Y	MU	LO WASH
8223	D	483	2	68	BLOWDOWN	B-426	V	LO WASH	PUMP AREA	LOM	57.63	L	Y	MU	LO WASH
8224	D	451	2	68	BLOWDOWN	REGEN	V	LO WASH	PUMP AREA	LOM	57.63	L	Y	MU	LO WASH
8225	E018		2	68	BLOWDOWN	REGEN	V	LO WASH	PUMP AREA	LOM	57.63	L	Y	MU	LO WASH
8226	E017		2	68	BLOWDOWN	REGEN	V	LO WASH	PUMP AREA	LOM	57.63	L	Y	MU	LO WASH, ADDED 12-95
8227	D449		2	68	BLOWDOWN	REGEN	V	LO WASH	PUMP AREA	LOM	57.63	L	Y	MU	LO WASH, ADDED 12-95
									PUMP AREA	LOM	57.63	L	Y	MU	LO WASH, ADDED 12-95

ED_002508A_00000396-00036

TABLE 69
REGISTRATION OF COMPONENTS IN BENZENE SERVICE
LIGHT OIL WASH, MAIN QUAD NO. 1

8250	E	349	2	69	MAIN QUAD	QUAD 1 V	ACETONE MANIFOLD BLOCKING	PLATFORM	LOM	57.63	L	Y	MIU	LO WASH
8251	E	352	2	69	MAIN QUAD	QUAD 1 V	ACETONE MANIFOLD BLOCKING	PLATFORM	LOM	57.63	L	Y	MIU	LO WASH
8252	E	350	2	69	MAIN QUAD	QUAD 1 V	ACETONE MANIFOLD CLEANOUT	PLATFORM	LOM	57.63	L	Y	MIU	LO WASH
8253	E	351	2	69	MAIN QUAD	QUAD 1 V	ACETONE MANIFOLD CLEANOUT	PLATFORM	LOM	57.63	L	Y	MIU	LO WASH
8254	E	353	2	69	MAIN QUAD	QUAD 1 V	ACETONE MANIFOLD BLOCKING	PLATFORM	LOM	57.63	L	Y	MIU	LO WASH
8255	E	356	2	69	MAIN QUAD	QUAD 1 V	ACETONE MANIFOLD BLOCKING	PLATFORM	LOM	57.63	L	Y	MIU	LO WASH
8256	E	354	2	69	MAIN QUAD	QUAD 1 V	ACETONE MANIFOLD CLEANOUT	PLATFORM	LOM	57.63	L	Y	MIU	LO WASH
8257	E	355	2	69	MAIN QUAD	QUAD 1 V	ACETONE MANIFOLD CLEANOUT	PLATFORM	LOM	57.63	L	Y	MIU	LO WASH
8258	E	359	2	69	MAIN QUAD	QUAD 1 V	ACETONE MANIFOLD CLEANOUT	PLATFORM	LOM	57.63	L	Y	MIU	LO WASH
8259	E	360	2	69	MAIN QUAD	QUAD 1 V	ACETONE MANIFOLD CLEANOUT	PLATFORM	LOM	57.63	L	Y	MIU	LO WASH
8260	E	358	2	69	MAIN QUAD	QUAD 1 V	ACETONE MANIFOLD BLOCKING	PLATFORM	LOM	57.63	L	Y	MIU	LO WASH
8261	E	361	2	69	MAIN QUAD	QUAD 1 V	ACETONE MANIFOLD BLOCKING	PLATFORM	LOM	57.63	L	Y	MIU	LO WASH
8262	E	357	2	69	MAIN QUAD	QUAD 1 V	ACETONE MANIFOLD N2 PURGE	PLATFORM	LOM	57.63	L	Y	MIU	LO WASH
8270	E	468	2	69	MAIN QUAD	QUAD 1 V	LOW POINT DRAIN MANIFOLD	PASSAGEWAY	LOM	57.63	L	Y	MIU	LO WASH
8271	E	469	2	69	MAIN QUAD	QUAD 1 V	LOW POINT DRAIN MANIFOLD	PASSAGEWAY	LOM	57.63	L	Y	MIU	LO WASH
8272	E	466	2	69	MAIN QUAD	QUAD 1 V	LOW POINT DRAIN MANIFOLD	PASSAGEWAY	LOM	57.63	L	Y	MIU	LO WASH
8273	E	467	2	69	MAIN QUAD	QUAD 1 V	LOW POINT DRAIN MANIFOLD	PASSAGEWAY	LOM	57.63	L	Y	MIU	LO WASH
8274	E	464	2	69	MAIN QUAD	QUAD 1 V	LOW POINT DRAIN MANIFOLD	PASSAGEWAY	LOM	57.63	L	Y	MIU	LO WASH
8275	E	465	2	69	MAIN QUAD	QUAD 1 V	LOW POINT DRAIN MANIFOLD	PASSAGEWAY	LOM	57.63	L	Y	MIU	LO WASH
8276	E	462	2	69	MAIN QUAD	QUAD 1 V	LOW POINT DRAIN MANIFOLD	PASSAGEWAY	LOM	57.63	L	Y	MIU	LO WASH
8277	E	463	2	69	MAIN QUAD	QUAD 1 V	LOW POINT DRAIN MANIFOLD	PASSAGEWAY	LOM	57.63	L	Y	MIU	LO WASH
8278	E	460	2	69	MAIN QUAD	QUAD 1 V	LOW POINT DRAIN MANIFOLD	PASSAGEWAY	LOM	57.63	L	Y	MIU	LO WASH
8279	E	461	2	69	MAIN QUAD	QUAD 1 V	LOW POINT DRAIN MANIFOLD	PASSAGEWAY	LOM	57.63	L	Y	MIU	LO WASH
8280			2	69	MAIN QUAD	QUAD 1 V	LOW POINT DRAIN MANIFOLD	PASSAGEWAY	LOM	57.63	L	Y	MIU	LO WASH

ED_002508A_00000396-00037

TABLE 70
REGISTRATION OF COMPONENTS IN BENZENE SERVICE
LIGHT OIL WASH, MAIN QUAD NO. 2

8300	E	366	2	70	MAIN QUAD	QUAD 2 V	ACETONE MANIFOLD NITROGEN PURGE	PLATFORM	LOM	57.63	L	Y	MIU	LO WASH
8301	E	365	2	70	MAIN QUAD	QUAD 2 V	ACETONE MANIFOLD BLOCKING	PLATFORM	LOM	57.63	L	Y	MIU	LO WASH
8302	E	362	2	70	MAIN QUAD	QUAD 2 V	ACETONE MANIFOLD BLOCKING	PLATFORM	LOM	57.63	L	Y	MIU	LO WASH
8303	E	363	2	70	MAIN QUAD	QUAD 2 V	ACETONE MANIFOLD CLEANOUT	PLATFORM	LOM	57.63	L	Y	MIU	LO WASH
8304	E	364	2	70	MAIN QUAD	QUAD 2 V	ACETONE MANIFOLD CLEANOUT	PLATFORM	LOM	57.63	L	Y	MIU	LO WASH
8305	E	367	2	70	MAIN QUAD	QUAD 2 V	ACETONE MANIFOLD BLOCKING	PLATFORM	LOM	57.63	L	Y	MIU	LO WASH
8306	E	370	2	70	MAIN QUAD	QUAD 2 V	ACETONE MANIFOLD BLOCKING	PLATFORM	LOM	57.63	L	Y	MIU	LO WASH
8307	E	369	2	70	MAIN QUAD	QUAD 2 V	ACETONE MANIFOLF PRESSURE GAUGE	PLATFORM	LOM	57.63	L	Y	MIU	LO WASH
8308	E	368	2	70	MAIN QUAD	QUAD 2 V	ACETONE MANIFOLD CLEANOUT	PLATFORM	LOM	57.63	L	Y	MIU	LO WASH
8309	E	373	2	70	MAIN QUAD	QUAD 2 V	ACETONE MANIFOLD CLEANOUT	PLATFORM	LOM	57.63	L	Y	MIU	LO WASH
8310	E	374	2	70	MAIN QUAD	QUAD 2 V	ACETONE MANIFOLD BLOCKING	PLATFORM	LOM	57.63	L	Y	MIU	LO WASH
8311	E	371	2	70	MAIN QUAD	QUAD 2 V	ACETONE MANIFOLD BLOCKING	PLATFORM	LOM	57.63	L	Y	MIU	LO WASH
8320			2	70	MAIN QUAD	QUAD 2 V	DIFFERENTIAL PRESSURE TAP	WALL	LOM	57.63	L	Y	MIU	LO WASH, ADDED 12-95
8321			2	70	MAIN QUAD	QUAD 2 V	DIFFERENTIAL PRESSURE TAP	WALL	LOM	57.63	L	Y	MIU	LO WASH, ADDED 12-95
8322			2	70	MAIN QUAD	QUAD 2 V	DIFFERENTIAL PRESSURE TAP	WALL	LOM	57.63	L	Y	MIU	LO WASH, ADDED 12-95
8323			2	70	MAIN QUAD	QUAD 2 V	DIFFERENTIAL PRESSURE TAP	WALL	LOM	57.63	L	Y	MIU	LO WASH, ADDED 12-95
8324			2	70	MAIN QUAD	QUAD 2 V	DIFFERENTIAL PRESSURE TAP	WALL	LOM	57.63	L	Y	MIU	LO WASH, ADDED 12-95
8325			2	70	MAIN QUAD	QUAD 2 V	DIFFERENTIAL PRESSURE TAP	WALL	LOM	57.63	L	Y	MIU	LO WASH, ADDED 12-95
8326			2	70	MAIN QUAD	QUAD 2 V	DIFFERENTIAL PRESSURE TAP	WALL	LOM	57.63	L	Y	MIU	LO WASH, ADDED 12-95
8327			2	70	MAIN QUAD	QUAD 2 V	DIFFERENTIAL PRESSURE TAP	WALL	LOM	57.63	L	Y	MIU	LO WASH, ADDED 12-95
8330	A002		2	70	MAIN QUAD	QUAD 2 V	LOW POINT DRAIN MANIFOLD	PASSAGEWAY	LOM	57.63	L	Y	MIU	LO WASH, ADDED 12-95
8331	A001		2	70	MAIN QUAD	QUAD 2 V	LOW POINT DRAIN MANIFOLD	PASSAGEWAY	LOM	57.63	L	Y	MIU	LO WASH, ADDED 12-95
8332	E	500	2	70	MAIN QUAD	QUAD 2 V	LOW POINT DRAIN MANIFOLD	PASSAGEWAY	LOM	57.63	L	Y	MIU	LO WASH
8333	E	499	2	70	MAIN QUAD	QUAD 2 V	LOW POINT DRAIN MANIFOLD	PASSAGEWAY	LOM	57.63	L	Y	MIU	LO WASH
8334	E	498	2	70	MAIN QUAD	QUAD 2 V	LOW POINT DRAIN MANIFOLD	PASSAGEWAY	LOM	57.63	L	Y	MIU	LO WASH
8335	E	497	2	70	MAIN QUAD	QUAD 2 V	LOW POINT DRAIN MANIFOLD	PASSAGEWAY	LOM	57.63	L	Y	MIU	LO WASH
8336	E	496	2	70	MAIN QUAD	QUAD 2 V	LOW POINT DRAIN MANIFOLD	PASSAGEWAY	LOM	57.63	L	Y	MIU	LO WASH
8337	E	495	2	70	MAIN QUAD	QUAD 2 V	LOW POINT DRAIN MANIFOLD	PASSAGEWAY	LOM	57.63	L	Y	MIU	LO WASH
8338	E	494	2	70	MAIN QUAD	QUAD 2 V	LOW POINT DRAIN MANIFOLD	PASSAGEWAY	LOM	57.63	L	Y	MIU	LO WASH
8339	E	493	2	70	MAIN QUAD	QUAD 2 V	LOW POINT DRAIN MANIFOLD	PASSAGEWAY	LOM	57.63	L	Y	MIU	LO WASH
8340	E	492	2	70	MAIN QUAD	QUAD 2 V	LOW POINT DRAIN MANIFOLD	PASSAGEWAY	LOM	57.63	L	Y	MIU	LO WASH

ED_002508A_00000396-00038

TABLE 71
REGISTRATION OF COMPONENTS IN BENZENE SERVICE
LIGHT OIL WASH, MAIN QUAD NO. 3

8350	E	384	2	71	MAIN QUAD	QUAD 3	V	ACETONE MANIFOLD NITROGEN PURGE	PLATFORM	LOM	57.63	L	Y	MIU	LO WASH
8351	E	385	2	71	MAIN QUAD	QUAD 3	V	ACETONE MANIFOLD BLOCKING	PLATFORM	LOM	57.63	L	Y	MIU	LO WASH
8352	E	388	2	71	MAIN QUAD	QUAD 3	V	ACETONE MANIFOLD BLOCKING	PLATFORM	LOM	57.63	L	Y	MIU	LO WASH
8353	E	380	2	71	MAIN QUAD	QUAD 3	V	ACETONE MANIFOLD BLOCKING	PLATFORM	LOM	57.63	L	Y	MIU	LO WASH
8354	E	383	2	71	MAIN QUAD	QUAD 3	V	ACETONE MANIFOLD BLOCKING	PLATFORM	LOM	57.63	L	Y	MIU	LO WASH
8355	E	376	2	71	MAIN QUAD	QUAD 3	V	ACETONE MANIFOLD BLOCKING	PLATFORM	LOM	57.63	L	Y	MIU	LO WASH
8356	E	377	2	71	MAIN QUAD	QUAD 3	V	ACETONE MANIFOLD CLEANOUT	PLATFORM	LOM	57.63	L	Y	MIU	LO WASH
8357	E	378	2	71	MAIN QUAD	QUAD 3	V	ACETONE MANIFOLD CLEANOUT	PLATFORM	LOM	57.63	L	Y	MIU	LO WASH
8358	E	379	2	71	MAIN QUAD	QUAD 3	V	ACETONE MANIFOLD BLOCKING	PLATFORM	LOM	57.63	L	Y	MIU	LO WASH
8370			2	71	MAIN QUAD	QUAD 3	V	DIFFERENTIAL PRESSURE TAP	WALL	LOM	57.63	L	Y	MIU	LO WASH, ADDED 12-95
8371			2	71	MAIN QUAD	QUAD 3	V	DIFFERENTIAL PRESSURE TAP	WALL	LOM	57.63	L	Y	MIU	LO WASH, ADDED 12-95
8372			2	71	MAIN QUAD	QUAD 3	V	DIFFERENTIAL PRESSURE TAP	WALL	LOM	57.63	L	Y	MIU	LO WASH, ADDED 12-95
8373			2	71	MAIN QUAD	QUAD 3	V	DIFFERENTIAL PRESSURE TAP	WALL	LOM	57.63	L	Y	MIU	LO WASH, ADDED 12-95
8374			2	71	MAIN QUAD	QUAD 3	V	DIFFERENTIAL PRESSURE TAP	WALL	LOM	57.63	L	Y	MIU	LO WASH, ADDED 12-95
8375			2	71	MAIN QUAD	QUAD 3	V	DIFFERENTIAL PRESSURE TAP	WALL	LOM	57.63	L	Y	MIU	LO WASH, ADDED 12-95
8376			2	71	MAIN QUAD	QUAD 3	V	DIFFERENTIAL PRESSURE TAP	WALL	LOM	57.63	L	Y	MIU	LO WASH, ADDED 12-95
8377			2	71	MAIN QUAD	QUAD 3	V	DIFFERENTIAL PRESSURE TAP	WALL	LOM	57.63	L	Y	MIU	LO WASH, ADDED 12-95
8380	E	458	2	71	MAIN QUAD	QUAD 3	V	LOW POINT DRAIN MANIFOLD	PASSAGEWAY	LOM	57.63	L	Y	MIU	LO WASH
8381	E	457	2	71	MAIN QUAD	QUAD 3	V	LOW POINT DRAIN MANIFOLD	PASSAGEWAY	LOM	57.63	L	Y	MIU	LO WASH
8382	E	456	2	71	MAIN QUAD	QUAD 3	V	LOW POINT DRAIN MANIFOLD	PASSAGEWAY	LOM	57.63	L	Y	MIU	LO WASH
8383	E	455	2	71	MAIN QUAD	QUAD 3	V	LOW POINT DRAIN MANIFOLD	PASSAGEWAY	LOM	57.63	L	Y	MIU	LO WASH
8384	E	454	2	71	MAIN QUAD	QUAD 3	V	LOW POINT DRAIN MANIFOLD	PASSAGEWAY	LOM	57.63	L	Y	MIU	LO WASH
8385	E	453	2	71	MAIN QUAD	QUAD 3	V	LOW POINT DRAIN MANIFOLD	PASSAGEWAY	LOM	57.63	L	Y	MIU	LO WASH
8386	E	452	2	71	MAIN QUAD	QUAD 3	V	LOW POINT DRAIN MANIFOLD	PASSAGEWAY	LOM	57.63	L	Y	MIU	LO WASH
8387	E	451	2	71	MAIN QUAD	QUAD 3	V	LOW POINT DRAIN MANIFOLD	PASSAGEWAY	LOM	57.63	L	Y	MIU	LO WASH
8388	E	450	2	71	MAIN QUAD	QUAD 3	V	LOW POINT DRAIN MANIFOLD	PASSAGEWAY	LOM	57.63	L	Y	MIU	LO WASH
8389	E	449	2	71	MAIN QUAD	QUAD 3	V	LOW POINT DRAIN MANIFOLD	PASSAGEWAY	LOM	57.63	L	Y	MIU	LO WASH

ED_002508A_00000396-00039

TABLE 72
REGISTRATION OF COMPONENTS IN BENZENE SERVICE
LIGHT OIL WASH, MAIN QUAD NO. 4

8401	E	392	2	72	MAIN QUAD	QUAD 4 V	ACETONE MANIFOLD BLOCKING	PLATFORM	LOM	57.63	L	Y	MIU	LO WASH
8402	E	391	2	72	MAIN QUAD	QUAD 4 V	ACETONE MANIFOLD CLEANOUT	PLATFORM	LOM	57.63	L	Y	MIU	LO WASH
8403	E	390	2	72	MAIN QUAD	QUAD 4 V	ACETONE MANIFOLD CLEANOUT	PLATFORM	LOM	57.63	L	Y	MIU	LO WASH
8404	E	389	2	72	MAIN QUAD	QUAD 4 V	ACETONE MANIFOLD BLOCKING	PLATFORM	LOM	57.63	L	Y	MIU	LO WASH
8405	E	397	2	72	MAIN QUAD	QUAD 4 V	ACETONE MANIFOLD BLOCKING	PLATFORM	LOM	57.63	L	Y	MIU	LO WASH
8406	E	396	2	72	MAIN QUAD	QUAD 4 V	ACETONE MANIFOLD CLEANOUT	PLATFORM	LOM	57.63	L	Y	MIU	LO WASH
8407	E	395	2	72	MAIN QUAD	QUAD 4 V	ACETONE MANIFOLD CLEANOUT	PLATFORM	LOM	57.63	L	Y	MIU	LO WASH
8408	E	394	2	72	MAIN QUAD	QUAD 4 V	ACETONE MANIFOLD BLOCKING	PLATFORM	LOM	57.63	L	Y	MIU	LO WASH
8409	E	401	2	72	MAIN QUAD	QUAD 4 V	ACETONE MANIFOLD BLOCKING	PLATFORM	LOM	57.63	L	Y	MIU	LO WASH
8410	E	400	2	72	MAIN QUAD	QUAD 4 V	ACETONE MANIFOLD CLEANOUT	PLATFORM	LOM	57.63	L	Y	MIU	LO WASH
8411	E	399	2	72	MAIN QUAD	QUAD 4 V	ACETONE MANIFOLD CLEANOUT	PLATFORM	LOM	57.63	L	Y	MIU	LO WASH
8412			2	72	MAIN QUAD	QUAD 4 V	ACETONE MANIFOLD BLOCKING	PLATFORM	LOM	57.63	L	Y	MIU	LO WASH
8420			2	72	MAIN QUAD	QUAD 4 V	DIFFERENTIAL PRESSURE TAP	PLATFORM	LOM	57.63	L	Y	MIU	LO WASH
8421			2	72	MAIN QUAD	QUAD 4 V	DIFFERENTIAL PRESSURE TAP	WALL	LOM	57.63	L	Y	MIU	LO WASH, ADDED 12-95
8422			2	72	MAIN QUAD	QUAD 4 V	DIFFERENTIAL PRESSURE TAP	WALL	LOM	57.63	L	Y	MIU	LO WASH, ADDED 12-95
8423			2	72	MAIN QUAD	QUAD 4 V	DIFFERENTIAL PRESSURE TAP	WALL	LOM	57.63	L	Y	MIU	LO WASH, ADDED 12-95
8424			2	72	MAIN QUAD	QUAD 4 V	DIFFERENTIAL PRESSURE TAP	WALL	LOM	57.63	L	Y	MIU	LO WASH, ADDED 12-95
8425			2	72	MAIN QUAD	QUAD 4 V	DIFFERENTIAL PRESSURE TAP	WALL	LOM	57.63	L	Y	MIU	LO WASH, ADDED 12-95
8426			2	72	MAIN QUAD	QUAD 4 V	DIFFERENTIAL PRESSURE TAP	WALL	LOM	57.63	L	Y	MIU	LO WASH, ADDED 12-95
8427			2	72	MAIN QUAD	QUAD 4 V	DIFFERENTIAL PRESSURE TAP	WALL	LOM	57.63	L	Y	MIU	LO WASH, ADDED 12-95
8430	E	475	2	72	MAIN QUAD	QUAD 4 V	LOW POINT DRAIN MANIFOLD	WALL	LOM	57.63	L	Y	MIU	LO WASH, ADDED 12-95
8431	E	474	2	72	MAIN QUAD	QUAD 4 V	LOW POINT DRAIN MANIFOLD	PASSAGEWAY	LOM	57.63	L	Y	MIU	LO WASH
8432	E	477	2	72	MAIN QUAD	QUAD 4 V	LOW POINT DRAIN MANIFOLD	PASSAGEWAY	LOM	57.63	L	Y	MIU	LO WASH
8433	E	476	2	72	MAIN QUAD	QUAD 4 V	LOW POINT DRAIN MANIFOLD	PASSAGEWAY	LOM	57.63	L	Y	MIU	LO WASH
8434	E	479	2	72	MAIN QUAD	QUAD 4 V	LOW POINT DRAIN MANIFOLD	PASSAGEWAY	LOM	57.63	L	Y	MIU	LO WASH
8435	E	478	2	72	MAIN QUAD	QUAD 4 V	LOW POINT DRAIN MANIFOLD	PASSAGEWAY	LOM	57.63	L	Y	MIU	LO WASH
8436	E	481	2	72	MAIN QUAD	QUAD 4 V	LOW POINT DRAIN MANIFOLD	PASSAGEWAY	LOM	57.63	L	Y	MIU	LO WASH
8437	E	480	2	72	MAIN QUAD	QUAD 4 V	LOW POINT DRAIN MANIFOLD	PASSAGEWAY	LOM	57.63	L	Y	MIU	LO WASH
8438	E	472	2	72	MAIN QUAD	QUAD 4 V	LOW POINT DRAIN MANIFOLD	PASSAGEWAY	LOM	57.63	L	Y	MIU	LO WASH
8439	E	471	2	72	MAIN QUAD	QUAD 4 V	LOW POINT DRAIN MANIFOLD	PASSAGEWAY	LOM	57.63	L	Y	MIU	LO WASH
8440	E	473	2	72	MAIN QUAD	QUAD 4 V	LOW POINT DRAIN MANIFOLD	PASSAGEWAY	LOM	57.63	L	Y	MIU	LO WASH

ED_002508A_00000396-00040

TABLE 73
REGISTRATION OF COMPONENTS IN BENZENE SERVICE
LIGHT OIL WASH, MAIN QUAD NO. 5

8450	E	440	2	73	MAIN QUAD	QUAD 5	V	LOW POINT DRAIN MANIFOLD	PASSAGEWAY	LOM	57.63	L	Y	MIU	LO WASH
8451	E	439	2	73	MAIN QUAD	QUAD 5	V	LOW POINT DRAIN MANIFOLD	PASSAGEWAY	LOM	57.63	L	Y	MIU	LO WASH
8452	E	438	2	73	MAIN QUAD	QUAD 5	V	LOW POINT DRAIN MANIFOLD	PASSAGEWAY	LOM	57.63	L	Y	MIU	LO WASH
8453	E	437	2	73	MAIN QUAD	QUAD 5	V	LOW POINT DRAIN MANIFOLD	PASSAGEWAY	LOM	57.63	L	Y	MIU	LO WASH
8454	E	442	2	73	MAIN QUAD	QUAD 5	V	LOW POINT DRAIN MANIFOLD	PASSAGEWAY	LOM	57.63	L	Y	MIU	LO WASH
8455	E	441	2	73	MAIN QUAD	QUAD 5	V	LOW POINT DRAIN MANIFOLD	PASSAGEWAY	LOM	57.63	L	Y	MIU	LO WASH
8456	E	444	2	73	MAIN QUAD	QUAD 5	V	LOW POINT DRAIN MANIFOLD	PASSAGEWAY	LOM	57.63	L	Y	MIU	LO WASH
8457	E	443	2	73	MAIN QUAD	QUAD 5	V	LOW POINT DRAIN MANIFOLD	PASSAGEWAY	LOM	57.63	L	Y	MIU	LO WASH
8458	E	446	2	73	MAIN QUAD	QUAD 5	V	LOW POINT DRAIN MANIFOLD	PASSAGEWAY	LOM	57.63	L	Y	MIU	LO WASH
8459	E	445	2	73	MAIN QUAD	QUAD 5	V	LOW POINT DRAIN MANIFOLD	PASSAGEWAY	LOM	57.63	L	Y	MIU	LO WASH
8460	E	447	2	73	MAIN QUAD	QUAD 5	V	LOW POINT DRAIN MANIFOLD	PASSAGEWAY	LOM	57.63	L	Y	MIU	LO WASH
8461	E	448	2	73	MAIN QUAD	QUAD 5	V	LOW POINT DRAIN MANIFOLD	PASSAGEWAY	LOM	57.63	L	Y	MIU	LO WASH
8465			2	73	MAIN QUAD	QUAD 5	V	DIFFERENTIAL PRESSURE TAP	WALL	LOM	57.63	L	Y	MIU	LO WASH, ADDED 12-95
8466			2	73	MAIN QUAD	QUAD 5	V	DIFFERENTIAL PRESSURE TAP	WALL	LOM	57.63	L	Y	MIU	LO WASH, ADDED 12-95
8467			2	73	MAIN QUAD	QUAD 5	V	DIFFERENTIAL PRESSURE TAP	WALL	LOM	57.63	L	Y	MIU	LO WASH, ADDED 12-95
8468			2	73	MAIN QUAD	QUAD 5	V	DIFFERENTIAL PRESSURE TAP	WALL	LOM	57.63	L	Y	MIU	LO WASH, ADDED 12-95
8469			2	73	MAIN QUAD	QUAD 5	V	DIFFERENTIAL PRESSURE TAP	WALL	LOM	57.63	L	Y	MIU	LO WASH, ADDED 12-95
8470			2	73	MAIN QUAD	QUAD 5	V	DIFFERENTIAL PRESSURE TAP	WALL	LOM	57.63	L	Y	MIU	LO WASH, ADDED 12-95
8471			2	73	MAIN QUAD	QUAD 5	V	DIFFERENTIAL PRESSURE TAP	WALL	LOM	57.63	L	Y	MIU	LO WASH, ADDED 12-95
8472			2	73	MAIN QUAD	QUAD 5	V	DIFFERENTIAL PRESSURE TAP	WALL	LOM	57.63	L	Y	MIU	LO WASH, ADDED 12-95
8480	E	419	2	73	MAIN QUAD	QUAD 5	V	ACETONE MANIFOLD NITROGEN PURGE	PLATFORM	LOM	57.63	L	Y	MIU	LO WASH
8481	E	424	2	73	MAIN QUAD	QUAD 5	V	ACETONE MANIFOLD BLOCKING	PLATFORM	LOM	57.63	L	Y	MIU	LO WASH
8482	E	425	2	73	MAIN QUAD	QUAD 5	V	ACETONE MANIFOLD CLEANOUT	PLATFORM	LOM	57.63	L	Y	MIU	LO WASH
8483	E	426	2	73	MAIN QUAD	QUAD 5	V	ACETONE MANIFOLD CLEANOUT	PLATFORM	LOM	57.63	L	Y	MIU	LO WASH
8484	E	427	2	73	MAIN QUAD	QUAD 5	V	ACETONE MANIFOLD BLOCKING	PLATFORM	LOM	57.63	L	Y	MIU	LO WASH
8485	E	420	2	73	MAIN QUAD	QUAD 5	V	ACETONE MANIFOLD BLOCKING	PLATFORM	LOM	57.63	L	Y	MIU	LO WASH
8486	E	421	2	73	MAIN QUAD	QUAD 5	V	ACETONE MANIFOLD CLEANOUT	PLATFORM	LOM	57.63	L	Y	MIU	LO WASH
8487	E	423	2	73	MAIN QUAD	QUAD 5	V	ACETONE MANIFOLD BLOCKING	PLATFORM	LOM	57.63	L	Y	MIU	LO WASH
8488	E	415	2	73	MAIN QUAD	QUAD 5	V	ACETONE MANIFOLD BLOCKING	PLATFORM	LOM	57.63	L	Y	MIU	LO WASH
8489	E	416	2	73	MAIN QUAD	QUAD 5	V	ACETONE MANIFOLD CLEANOUT	PLATFORM	LOM	57.63	L	Y	MIU	LO WASH
8490	E	417	2	73	MAIN QUAD	QUAD 5	V	ACETONE MANIFOLD CLEANOUT	PLATFORM	LOM	57.63	L	Y	MIU	LO WASH
8491	E	418	2	73	MAIN QUAD	QUAD 5	V	ACETONE MANIFOLD BLOCKING	PLATFORM	LOM	57.63	L	Y	MIU	LO WASH

ED_002508A_00000396-00041

TABLE 74
REGISTRATION OF COMPONENTS IN BENZENE SERVICE
LIGHT OIL WASH, MAIN QUAD NO. 6

8500	E	489	2	74	MAIN QUAD	QUAD 6 V	LOW POINT DRAIN MANIFOLD	PASSAGEWAY	LOM	57.63	L	Y	MIU	LO WASH
8501	E	491	2	74	MAIN QUAD	QUAD 6 V	LOW POINT DRAIN MANIFOLD	PASSAGEWAY	LOM	57.63	L	Y	MIU	LO WASH
8502	E	487	2	74	MAIN QUAD	QUAD 6 V	LOW POINT DRAIN MANIFOLD	PASSAGEWAY	LOM	57.63	L	Y	MIU	LO WASH
8503	E	488	2	74	MAIN QUAD	QUAD 6 V	LOW POINT DRAIN MANIFOLD	PASSAGEWAY	LOM	57.63	L	Y	MIU	LO WASH
8504	E	485	2	74	MAIN QUAD	QUAD 6 V	LOW POINT DRAIN MANIFOLD	PASSAGEWAY	LOM	57.63	L	Y	MIU	LO WASH
8505	E	486	2	74	MAIN QUAD	QUAD 6 V	LOW POINT DRAIN MANIFOLD	PASSAGEWAY	LOM	57.63	L	Y	MIU	LO WASH
8506	E	483	2	74	MAIN QUAD	QUAD 6 V	LOW POINT DRAIN MANIFOLD	PASSAGEWAY	LOM	57.63	L	Y	MIU	LO WASH
8507	E	484	2	74	MAIN QUAD	QUAD 6 V	LOW POINT DRAIN MANIFOLD	PASSAGEWAY	LOM	57.63	L	Y	MIU	LO WASH
8508	E	482	2	74	MAIN QUAD	QUAD 6 V	LOW POINT DRAIN MANIFOLD	WALL	LOM	57.63	L	Y	MIU	LO WASH, ADDED 12-95
8509			2	74	MAIN QUAD	QUAD 6 V	DIFFERENTIAL PRESSURE TAP	WALL	LOM	57.63	L	Y	MIU	LO WASH, ADDED 12-95
8515			2	74	MAIN QUAD	QUAD 6 V	DIFFERENTIAL PRESSURE TAP	WALL	LOM	57.63	L	Y	MIU	LO WASH, ADDED 12-95
8516			2	74	MAIN QUAD	QUAD 6 V	DIFFERENTIAL PRESSURE TAP	WALL	LOM	57.63	L	Y	MIU	LO WASH, ADDED 12-95
8517			2	74	MAIN QUAD	QUAD 6 V	DIFFERENTIAL PRESSURE TAP	WALL	LOM	57.63	L	Y	MIU	LO WASH, ADDED 12-95
8518			2	74	MAIN QUAD	QUAD 6 V	DIFFERENTIAL PRESSURE TAP	WALL	LOM	57.63	L	Y	MIU	LO WASH, ADDED 12-95
8519			2	74	MAIN QUAD	QUAD 6 V	DIFFERENTIAL PRESSURE TAP	WALL	LOM	57.63	L	Y	MIU	LO WASH, ADDED 12-95
8520			2	74	MAIN QUAD	QUAD 6 V	DIFFERENTIAL PRESSURE TAP	WALL	LOM	57.63	L	Y	MIU	LO WASH, ADDED 12-95
8521			2	74	MAIN QUAD	QUAD 6 V	DIFFERENTIAL PRESSURE TAP	WALL	LOM	57.63	L	Y	MIU	LO WASH, ADDED 12-95
8522			2	74	MAIN QUAD	QUAD 6 V	DIFFERENTIAL PRESSURE TAP	PLATFORM	LOM	57.63	L	Y	MIU	LO WASH
8530	E	410	2	74	MAIN QUAD	QUAD 6 V	ACETONE MANIFOLF NITROGEN PURGE	PLATFORM	LOM	57.63	L	Y	MIU	LO WASH
8531	E	411	2	74	MAIN QUAD	QUAD 6 V	ACETONE MANIFOLD BLOCKING	PLATFORM	LOM	57.63	L	Y	MIU	LO WASH
8532	E	412	2	74	MAIN QUAD	QUAD 6 V	ACETONE MANIFOLD CLEANOUT	PLATFORM	LOM	57.63	L	Y	MIU	LO WASH
8533	E	413	2	74	MAIN QUAD	QUAD 6 V	ACETONE MANIFOLD CLEANOUT	PLATFORM	LOM	57.63	L	Y	MIU	LO WASH
8534	E	414	2	74	MAIN QUAD	QUAD 6 V	ACETONE MANIFOLD BLOCKING	PLATFORM	LOM	57.63	L	Y	MIU	LO WASH
8535	E	406	2	74	MAIN QUAD	QUAD 6 V	ACETONE MANIFOLD BLOCKING	PLATFORM	LOM	57.63	L	Y	MIU	LO WASH
8536	E	407	2	74	MAIN QUAD	QUAD 6 V	ACETONE MANIFOLD CLEANOUT	PLATFORM	LOM	57.63	L	Y	MIU	LO WASH
8537	E	408	2	74	MAIN QUAD	QUAD 6 V	ACETONE MANIFOLD CLEANOUT	PLATFORM	LOM	57.63	L	Y	MIU	LO WASH
8538	E	409	2	74	MAIN QUAD	QUAD 6 V	ACETONE MANIFOLD BLOCKING	PLATFORM	LOM	57.63	L	Y	MIU	LO WASH
8539	E	402	2	74	MAIN QUAD	QUAD 6 V	ACETONE MANIFOLD BLOCKING	PLATFORM	LOM	57.63	L	Y	MIU	LO WASH
8540	E	403	2	74	MAIN QUAD	QUAD 6 V	ACETONE MANIFOLD CLEANOUT	PLATFORM	LOM	57.63	L	Y	MIU	LO WASH
8541	E	404	2	74	MAIN QUAD	QUAD 6 V	ACETONE MANIFOLD CLEANOUT	PLATFORM	LOM	57.63	L	Y	MIU	LO WASH
8542	E	405	2	74	MAIN QUAD	QUAD 6 V	ACETONE MANIFOLD BLOCKING	PLATFORM	LOM	57.63	L	Y	MIU	LO WASH

ED_002508A_00000396-00042

TABLE 75
REGISTRATION OF COMPONENTS IN BENZENE SERVICE
LIGHT OIL WASH, MAIN QUAD NO. 7

8550	E	431	2	75	MAIN QUAD	QUAD 7 V	LOW POINT DRAIN MANIFOLD	PASSAGEWAY	LOM	57.63	L	Y	MIU	LO WASH
8551	E	430	2	75	MAIN QUAD	QUAD 7 V	LOW POINT DRAIN MANIFOLD	PASSAGEWAY	LOM	57.63	L	Y	MIU	LO WASH
8552	E	432	2	75	MAIN QUAD	QUAD 7 V	LOW POINT DRAIN MANIFOLD	PASSAGEWAY	LOM	57.63	L	Y	MIU	LO WASH
8553	E	434	2	75	MAIN QUAD	QUAD 7 V	LOW POINT DRAIN MANIFOLD	PASSAGEWAY	LOM	57.63	L	Y	MIU	LO WASH
8554	E	438	2	75	MAIN QUAD	QUAD 7 V	LOW POINT DRAIN MANIFOLD	PASSAGEWAY	LOM	57.63	L	Y	MIU	LO WASH
8555	E	435	2	75	MAIN QUAD	QUAD 7 V	LOW POINT DRAIN MANIFOLD	PASSAGEWAY	LOM	57.63	L	Y	MIU	LO WASH
8556	E	433	2	75	MAIN QUAD	QUAD 7 V	LOW POINT DRAIN MANIFOLD	PASSAGEWAY	LOM	57.63	L	Y	MIU	LO WASH
8565			2	75	MAIN QUAD	QUAD 7 V	PRESSURE DIFFERENTIAL TAP	WALL	LOM	57.63	L	Y	MIU	LO WASH, ADDED 12-95
8566			2	75	MAIN QUAD	QUAD 7 V	PRESSURE DIFFERENTIAL TAP	WALL	LOM	57.63	L	Y	MIU	LO WASH, ADDED 12-95
8567			2	75	MAIN QUAD	QUAD 7 V	PRESSURE DIFFERENTIAL TAP	WALL	LOM	57.63	L	Y	MIU	LO WASH, ADDED 12-95
8568			2	75	MAIN QUAD	QUAD 7 V	PRESSURE DIFFERENTIAL TAP	WALL	LOM	57.63	L	Y	MIU	LO WASH, ADDED 12-95
8569			2	75	MAIN QUAD	QUAD 7 V	PRESSURE DIFFERENTIAL TAP	WALL	LOM	57.63	L	Y	MIU	LO WASH, ADDED 12-95
8570			2	75	MAIN QUAD	QUAD 7 V	PRESSURE DIFFERENTIAL TAP	WALL	LOM	57.63	L	Y	MIU	LO WASH, ADDED 12-95
8571			2	75	MAIN QUAD	QUAD 7 V	PRESSURE DIFFERENTIAL TAP	WALL	LOM	57.63	L	Y	MIU	LO WASH, ADDED 12-95
8572			2	75	MAIN QUAD	QUAD 7 V	PRESSURE DIFFERENTIAL TAP	WALL	LOM	57.63	L	Y	MIU	LO WASH, ADDED 12-95
8580	E	331	2	75	MAIN QUAD	QUAD 7 V	ACETONE MANIFOLD NITROGEN PURGE	PLATFORM	LOM	57.63	L	Y	MIU	LO WASH
8581	E	346	2	75	MAIN QUAD	QUAD 7 V	ACETONE MANIFOLD CLEANOUT	PLATFORM	LOM	57.63	L	Y	MIU	LO WASH
8582	E	342	2	75	MAIN QUAD	QUAD 7 V	ACETONE MANIFOLD BLOCKING	PLATFORM	LOM	57.63	L	Y	MIU	LO WASH
8583			2	75	MAIN QUAD	QUAD 7	ACETONE MANIFOLD BLOCKING	PLATFORM	LOM	57.63	L	Y	MIU	LO WASH, ADDED 12-95
8584	E	343	2	75	MAIN QUAD	QUAD 7 V	ACETONE MANIFOLD BLOCKING	PLATFORM	LOM	57.63	L	Y	MIU	LO WASH
8585			2	75	MAIN QUAD	QUAD 7	ACETONE MANIFOLD BLOCKING	PLATFORM	LOM	57.63	L	Y	MIU	LO WASH, ADDED 12-95
8586	E	345	2	75	MAIN QUAD	QUAD 7 V	ACETONE MANIFOLD CLEANOUT	PLATFORM	LOM	57.63	L	Y	MIU	LO WASH
8587	E	341	2	75	MAIN QUAD	QUAD 7 V	ACETONE MANIFOLD CLEANOUT	PLATFORM	LOM	57.63	L	Y	MIU	LO WASH
8588	E	337	2	75	MAIN QUAD	QUAD 7 V	ACETONE MANIFOLD BLOCKING	PLATFORM	LOM	57.63	L	Y	MIU	LO WASH
8589	E	338	2	75	MAIN QUAD	QUAD 7 V	ACETONE MANIFOLD BLOCKING	PLATFORM	LOM	57.63	L	Y	MIU	LO WASH
8590	E	340	2	75	MAIN QUAD	QUAD 7 V	ACETONE MANIFOLD CLEANOUT	PLATFORM	LOM	57.63	L	Y	MIU	LO WASH
8591	E339		2	75	MAIN QUAD	QUAD 7	ACETONE MANIFOLD CLEANOUT	PLATFORM	LOM	57.63	L	Y	MIU	LO WASH, ADDED 12-95
8592	E	336	2	75	MAIN QUAD	QUAD 7 V	ACETONE MANIFOLD BLOCKING	PLATFORM	LOM	57.63	L	Y	MIU	LO WASH
8593	E	332	2	75	MAIN QUAD	QUAD 7 V	ACETONE MANIFOLD BLOCKING	PLATFORM	LOM	57.63	L	Y	MIU	LO WASH
8594	E	333	2	75	MAIN QUAD	QUAD 7 V	ACETONE MANIFOLD CLEANOUT	PLATFORM	LOM	57.63	L	Y	MIU	LO WASH
8595	E	335	2	75	MAIN QUAD	QUAD 7 V	ACETONE MANIFOLD CLEANOUT	PLATFORM	LOM	57.63	L	Y	MIU	LO WASH
8596	E	334	2	75	MAIN QUAD	QUAD 7 V	ACETONE MANIFOLD CLEANOUT	PLATFORM	LOM	57.63	L	Y	MIU	LO WASH

ED_002508A_00000396-00043

TABLE 76
REGISTRATION OF COMPONENTS IN BENZENE SERVICE
LIGHT OIL WASH AND BALANCING GAS AREAS, MAIN QUADS NO. 1 AND 2

8600	D	090	2	76	MAIN QUAD	R-401D	V	BENZENE OVER FLOW VALVE	OVER WALKWA	SG	16.00	G	Y	M		
8601	D	089	2	76	MAIN QUAD	R-401D	V	BENZENE OVER FLOW VALVE	OVER WALKWA	SG	16.00	G	Y	M		
8602	D	094	2	76	MAIN QUAD	R-401C	V	DERIMMING GAS VALVE	OVER WALKWA	SG	16.00	G	Y	M		
8603	D	095	2	76	MAIN QUAD	R-401C	V	DERIMMING GAS VALVE	OVER WALKWA	SG	16.00	G	Y	M		
8604	D	102	2	76	MAIN QUAD	R-401B	V	BENZENE OVER FLOW	OVER WALKWA	SG	16.00	G	Y	M		
8605	D	103	2	76	MAIN QUAD	R-401B	V	BENZENE OVER FLOW	OVER WALKWA	SG	16.00	G	Y	M		
8606	D	109	2	76	MAIN QUAD	R-401A	V	BENZENE OVER FLOW VALVE	OVER WALKWA	SG	16.00	G	Y	M		
8607	D	108	2	76	MAIN QUAD	R-401A	V	BENZENE OVER FLOW VALVE	OVER WALKWA	SG	16.00	G	Y	M		
8615	D	086	2	76	MAIN QUAD	R-401D	V	DERIMMING GAS VALVE	OVER WALKWA	SG	16.00	G	Y	M		
8616	D	087	2	76	MAIN QUAD	R-401D	V	DERIMMING GAS VALVE	OVER WALKWA	SG	16.00	G	Y	M		
8617	D	088	2	76	MAIN QUAD	R-401D	V	DERIMMING GAS VALVE	OVER WALKWA	SG	16.00	G	Y	M		
8618	D	096	2	76	MAIN QUAD	R-401C	V	BENZENE OVER FLOW	OVER WALKWA	SG	16.00	G	Y	M		
8619	D	097	2	76	MAIN QUAD	R-401C	V	BENZENE OVER FLOW	OVER WALKWA	SG	16.00	G	Y	M		
8620	D	100	2	76	MAIN QUAD	R-401B	V	DERIMMING GAS VALVE	OVER WALKWA	SG	16.00	G	Y	M		
8621	D	101	2	76	MAIN QUAD	R-401B	V	DERIMMING GAS VALVE	OVER WALKWA	SG	16.00	G	Y	M		
8622			2	76	MAIN QUAD	R-401A	V	DERIMMING GAS VALVE	OVER WALKWA	SG	16.00	G	Y	M		
8623	D	107	2	76	MAIN QUAD	R-401A	V	DERIMMING GAS VALVE	OVER WALKWA	SG	16.00	G	Y	M	ADDED 12-95	
8630	D	058	2	76	MAIN QUAD	R-402A	V	BENZENE OVER FLOW VALVE	OVER WALKWA	SG	16.00	G	Y	M		
8631	D	059	2	76	MAIN QUAD	R-402A	V	BENZENE OVER FLOW VALVE	OVER WALKWA	SG	16.00	G	Y	M		
8632	D	052	2	76	MAIN QUAD	R-402B	V	BENZENE OVER FLOW VALVE	OVER WALKWA	SG	16.00	GL	Y	M		
8633	D	053	2	76	MAIN QUAD	R-402B	V	BENZENE OVER FLOW VALVE	OVER WALKWA	SG	16.00	G	Y	M		
8634	D	046	2	76	MAIN QUAD	R-402C	V	BENZENE OVER FLOW VALVE	OVER WALKWA	SG	16.00	G	Y	M		
8635	D	047	2	76	MAIN QUAD	R-402C	V	BENZENE OVER FLOW VALVE	OVER WALKWA	SG	16.00	G	Y	M		
8636	D	040	2	76	MAIN QUAD	R-402D	V	BENZENE OVER FLOW VALVE	OVER WALKWA	SG	16.00	G	Y	M		
8637	D	041	2	76	MAIN QUAD	R-402D	V	BENZENE OVER FLOW VALVE	OVER WALKWA	LO	16.00	G	Y	M		
8645	D	060	2	76	MAIN QUAD	R-402A	V	DERIMING GAS VALVE	OVER WALKWA	SG	16.00	G	Y	M		
8646	D	061	2	76	MAIN QUAD	R-402A	V	DERIMING GAS VALVE	OVER WALKWA	SG	16.00	G	Y	M		
8647	D	062	2	76	MAIN QUAD	R-402A	V	DERIMING GAS VALVE	OVER WALKWA	SG	16.00	G	Y	M		
8648	D	054	2	76	MAIN QUAD	R-402B	V	DERIMING GAS VALVE	OVER WALKWA	SG	16.00	G	Y	M		
8649	D	055	2	76	MAIN QUAD	R-402B	V	DERIMING GAS VALVE	OVER WALKWA	SG	16.00	G	Y	M		
8650	D	049	2	76	MAIN QUAD	R-402C	V	DERIMING GAS VALVE	OVER WALKWA	SG	16.00	G	Y	M		
8651			2	76	MAIN QUAD	R-402C	V	DERIMNG GAS VALVE	OVER WALKWA	SG	16.00	G	Y	M		
8652	D	042	2	76	MAIN QUAD	R-402D	V	DERIMING GAS VALVE	OVER WALKWA	SG	16.00	G	Y	M	ADDED 12-95	
8653	D	043	2	76	MAIN QUAD	R-402D	V	DERIMING GAS VALVE	OVER WALKWA	SG	16.00	G	Y	M		
8660	D	073	2	76	MAIN QUAD	QUAD 2	SG	LO WASH SIGHT GLASS	OVER WALKWA	SG	16.00	G	Y	M		
8661	D	074	2	76	MAIN QUAD	QUAD 2	V	LO WASH VALVE	BETW WALKWY	LOM	57.63	L	Y	MIU	LO WASH	
8662	D	072	2	76	MAIN QUAD	QUAD 2	V	LO WASH VALVE	BETW WALKWY	LOM	57.63	L	Y	MIU	LO WASH	
8663	D	070	2	76	MAIN QUAD	QUAD 2	V	LO WASH VALVE	BETW WALKWY	LOM	57.63	L	Y	MIU	LO WASH	
8664	D	080	2	76	MAIN QUAD	QUAD 1	V	LO WASH VALVE	BETW WALKWY	LOM	57.63	L	Y	MIU	LO WASH	
8665	D	079	2	76	MAIN QUAD	QUAD 1	V	LO WASH VALVE	BETW WALKWY	LOM	57.63	L	Y	MIU	LO WASH	
8666			2	76	MAIN QUAD	QUAD 1	V	LO WASH VALVE	BETW WALKWY	LOM	57.63	L	Y	MIU	LO WASH	
8667	D	076	2	76	MAIN QUAD	QUAD 1	SG	LO WASH SIGHT GLASS	BETW WALKWY	LOM	57.63	L	Y	MIU	LO WASH, ADDED 12-95	
8668	D	075	2	76	MAIN QUAD	QUAD 1	V	LO WASH VALVE	BETW WALKWY	LOM	57.63	L	Y	MIU	LO WASH	
8669	D	078	2	76	MAIN QUAD	QUAD 1	RG	LO WASH REGULATER	BETW WALKWY	LOM	57.63	L	Y	MIU	LO WASH	
8670	D	077	2	76	MAIN QUAD	QUAD 1	V	LO WASH VALVE	BETW WALKWY	LOM	57.63	L	Y	MIU	LO WASH	
8671			2	76	MAIN QUAD	QUAD 1	V	LO WASH VALVE	BETW WALKWY	LOM	57.63	L	Y	MIU	LO WASH	
8672	D	071	2	76	MAIN QUAD	QUAD 2	V	LO WASH VALVE	BETW WALKWY	LOM	57.63	L	Y	MIU	LO WASH, ADDED 12-95	
8680	D	065	2	76	MAIN QUAD	QUAD 2	V	DERIMING GAS VALVE	BETW WALKWY	LOM	57.63	L	Y	MIU	LO WASH	
8681	D	068	2	76	MAIN QUAD	QUAD 2	V	DERIMING GAS VALVE	BETW WALKWY	SG	16.00	GL	Y	M		
8682	D	064	2	76	MAIN QUAD	QUAD 2	V	DERIMING GAS VALVE	BETW WALKWY	SG	16.00	GL	Y	M		
8683	D	085	2	76	MAIN QUAD	QUAD 1	V	DERIMING GAS VALVE	BETW WALKWY	SG	16.00	GL	Y	M		
									BETW WALKWY	SG	16.00	GL	Y	M		

ED_002508A_00000396-00044

8684	D	082	2	76	MAIN QUAD	QUAD 1	V	DERIMNG GAS VALVE	BETW WALKWY	SG	16.00	GL	Y	M
8685	D	083	2	76	MAIN QUAD	QUAD 1	V	DERIMNG GAS VALVE	BETW WALKWY	SG	16.00	GL	Y	M
8686	D	084	2	76	MAIN QUAD	QUAD 1	V	DERIMNG GAS VALVE	BETW WALKWY	SG	16.00	GL	Y	M
8687	D	081	2	76	MAIN QUAD	QUAD 1	V	DERIMNG GAS VALVE	BETW WALKWY	SG	16.00	GL	Y	M
8688	D	069	2	76	MAIN QUAD	QUAD 2	V	DERIMNG GAS VALVE	BETW WALKWY	SG	16.00	GL	Y	M
8689	D	067	2	76	MAIN QUAD	QUAD 2	V	DERIMNG GAS VALVE	BETW WALKWY	SG	16.00	GL	Y	M
8690	D	066	2	76	MAIN QUAD	QUAD 2	V	DERIMNG GAS VALVE	BETW WALKWY	SG	16.00	GL	Y	M

TABLE 77
REGISTRATION OF COMPONENTS IN BENZENE SERVICE
LIGHT OIL WASH AND BALANCING GAS AREAS, MAIN QUADS NO. 3 AND 4

8700	D	155	2	77	MAIN QUAD	R-403A	V	BENZENE OVERFLOW VALVE	OVER WALKWA	SG	16.00	G	Y	M	
8701	D	156	2	77	MAIN QUAD	R-403A	V	BENZENE OVERFLOW VALVE	OVER WALKWA	SG	16.00	G	Y	M	
8702	D	148	2	77	MAIN QUAD	R-403B	V	BENZENE OVERFLOW VALVE	OVER WALKWA	SG	16.00	G	Y	M	
8703	D	149	2	77	MAIN QUAD	R-403B	V	BENZENE OVERFLOW VALVE	OVER WALKWA	SG	16.00	G	Y	M	
8704	D	145	2	77	MAIN QUAD	R-403C	V	DERIMING GAS VALVE	OVER WALKWA	SG	16.00	G	Y	M	
8705			2	77	MAIN QUAD	R-403C	V	DERIMING GAS VALVE	OVER WALKWA	SG	16.00	G	Y	M	ADDED 12-95
8706	D	139	2	77	MAIN QUAD	R-403D	V	DERIMING GAS VALVE	OVER WALKWA	SG	16.00	G	Y	M	
8707	D	138	2	77	MAIN QUAD	R-403D	V	DERIMING GAS VALVE	OVER WALKWA	SG	16.00	G	Y	M	
8715	D	159	2	77	MAIN QUAD	R-403A	V	DERIMING GAS VALVE	OVER WALKWA	SG	16.00	G	Y	M	
8716	D	160	2	77	MAIN QUAD	R-403A	V	DERIMING GAS VALVE	OVER WALKWA	SG	16.00	G	Y	M	
8717	D	157	2	77	MAIN QUAD	R-403A	V	DERIMING GAS VALVE	OVER WALKWA	SG	16.00	G	Y	M	
8718	D	158	2	77	MAIN QUAD	R-403A	V	DERIMING GAS VALVE	OVER WALKWA	SG	16.00	G	Y	M	
8719	D	152	2	77	MAIN QUAD	R-403B	V	DERIMING GAS VALVE	OVER WALKWA	SG	16.00	G	Y	M	
8720	D	151	2	77	MAIN QUAD	R-403B	V	DERIMING GAS VALVE	OVER WALKWA	SG	16.00	G	Y	M	
8721	D	150	2	77	MAIN QUAD	R-403B	V	DERIMING GAS VALVE	OVER WALKWA	SG	16.00	G	Y	M	
8722	D	142	2	77	MAIN QUAD	R-403C	V	BENZENE OVERFLOW VALVE	OVER WALKWA	SG	16.00	G	Y	M	
8723	D	143	2	77	MAIN QUAD	R-403C	V	BENZENE OVERFLOW VALVE	OVER WALKWA	SG	16.00	G	Y	M	
8724	D	136	2	77	MAIN QUAD	R-403D	V	BENZENE OVERFLOW VALVE	OVER WALKWA	SG	16.00	G	Y	M	
8725	D	137	2	77	MAIN QUAD	R-403D	V	BENZENE OVERFLOW VALVE	OVER WALKWA	SG	16.00	G	Y	M	
8730	D	185	2	77	MAIN QUAD	R-404A	V	DERIMMING GAS VALVE	OVER WALKWA	SG	16.00	G	Y	M	
8731	D	186	2	77	MAIN QUAD	R-404A	V	DERIMMING GAS VALVE	OVER WALKWA	SG	16.00	G	Y	M	
8732	D	192	2	77	MAIN QUAD	R-404B	V	DERIMMING GAS VALVE	OVER WALKWA	SG	16.00	G	Y	M	
8733	D	191	2	77	MAIN QUAD	R-404B	V	DERIMMING GAS VALVE	OVER WALKWA	SG	16.00	G	Y	M	
8734	D	198	2	77	MAIN QUAD	R-404C	V	DERIMMING GAS VALVE	OVER WALKWA	SG	16.00	G	Y	M	
8735	D	197	2	77	MAIN QUAD	R-404C	V	DERIMMING GAS VALVE	OVER WALKWA	SG	16.00	G	Y	M	
8736	D	203	2	77	MAIN QUAD	R-404D	V	DERIMMING GAS VALVE	OVER WALKWA	SG	16.00	G	Y	M	
8745	D	187	2	77	MAIN QUAD	R-404A	V	BENZENE OVER FLOW VALVE	OVER WALKWA	SG	16.00	G	Y	M	
8746	D	188	2	77	MAIN QUAD	R-404A	V	BENZENE OVER FLOW VALVE	OVER WALKWA	SG	16.00	G	Y	M	
8747	D	193	2	77	MAIN QUAD	R-404B	V	BENZENE OVER FLOW VALVE	OVER WALKWA	SG	16.00	G	Y	M	
8748	D	194	2	77	MAIN QUAD	R-404B	V	BENZENE OVER FLOW VALVE	OVER WALKWA	SG	16.00	G	Y	M	
8749	D	200	2	77	MAIN QUAD	R-404C	V	BENZENE OVER FLOW VALVE	OVER WALKWA	SG	16.00	G	Y	M	
8750	D	199	2	77	MAIN QUAD	R-404C	V	BENZENE OVER FLOW VALVE	OVER WALKWA	SG	16.00	G	Y	M	
8751	d207		2	77	MAIN QUAD	R-404D	V	BENZENE OVER FLOW VALVE	OVER WALKWA	SG	16.00	G	Y	M	ADDED 12-95
8752	D	206	2	77	MAIN QUAD	R-404D	V	BENZENE OVER FLOW VALVE	OVER WALKWA	SG	16.00	G	Y	M	
8753	D	205	2	77	MAIN QUAD	R-404D	V	BENZENE OVER FLOW VALVE	OVER WALKWA	SG	16.00	G	Y	M	
8760	D	171	2	77	MAIN QUAD	QUAD 3	SG	LO WASH SIGHT GLASS	BETW WALKWY	LOM	57.63	L	Y	MIU	LO WASH
8761			2	77	MAIN QUAD	QUAD 3	SG	LO WASH BLOCKING VALVE	BETW WALKWY	LOM	57.63	L	Y	MIU	LO WASH, ADDED 12-95
8762	D	163	2	77	MAIN QUAD	QUAD 3	V	LO WASH VALVEMAIN CUT OFF QUAD 3	BETW WALKWY	LOM	57.63	L	Y	MIU	LO WASH
8763	D	164	2	77	MAIN QUAD	QUAD 3	RG	LO WASH REGULATER	BETW WALKWY	LOM	57.63	L	Y	MIU	LO WASH
8764	D	165	2	77	MAIN QUAD	QUAD 3	V	LO WASH VALVE	BETW WALKWY	LOM	57.63	L	Y	MIU	LO WASH
8765	D	175	2	77	MAIN QUAD	QUAD 4	V	LO WASH VALVE	BETW WALKWY	LOM	57.63	L	Y	MIU	LO WASH
8766	D	174	2	77	MAIN QUAD	QUAD 4	V	LO WASH VALVE	BETW WALKWY	LOM	57.63	L	Y	MIU	LO WASH
8767	D	176	2	77	MAIN QUAD	QUAD 4	RG	LO WASH REGULATER	BETW WALKWY	LOM	57.63	L	Y	MIU	LO WASH
8768	D	177	2	77	MAIN QUAD	QUAD 4	V	LO WASH VALVE	BETW WALKWY	LOM	57.63	L	Y	MIU	LO WASH
8769	D	173	2	77	MAIN QUAD	QUAD 4	SG	LO WASH SIGHT GLASS	BETW WALKWY	LOM	57.63	L	Y	MIU	LO WASH
8770	D	172	2	77	MAIN QUAD	QUAD 4/	V	LO WASH VALVEMAIN CUTOFF QUAD 4	BETW WALKWY	LOM	57.63	L	Y	MIU	LO WASH
8780	D	167	2	77	MAIN QUAD	QUAD 3	V	DERIMING GAS VALVE	BETW WALKWY	SG	16.00	GL	Y	M	
8781	D	169	2	77	MAIN QUAD	QUAD 3	V	DERIMING GAS VALVE	BETW WALKWY	SG	16.00	GL	Y	M	
8782	D	166	2	77	MAIN QUAD	QUAD 3	V	DERIMING GAS VALVE	BETW WALKWY	SG	16.00	GL	Y	M	
8783	D	170	2	77	MAIN QUAD	QUAD 3	V	DERIMING GAS VALVE	BETW WALKWY	SG	16.00	GL	Y	M	
8784	D	168	2	77	MAIN QUAD	QUAD 3	V	DERIMING GAS VALVE	BETW WALKWY	SG	16.00	GL	Y	M	

ED_002508A_00000396-00046

8785	D	181	2	77	MAIN QUAD	QUAD 4 V	DERIMING GAS VALVE	BETW WALKWY	SG	16.00	GL	Y	M
8786	D	180	2	77	MAIN QUAD	QUAD 4 V	DERIMING GAS VALVE	BETW WALKWY	SG	16.00	GL	Y	M
8787	D	182	2	77	MAIN QUAD	QUAD 4 V	DERIMING GAS VALVE	BETW WALKWY	SG	16.00	GL	Y	M
8788	D	183	2	77	MAIN QUAD	QUAD 4 V	DERIMING GAS VALVE	BETW WALKWY	SG	16.00	GL	Y	M
8789	D	179	2	77	MAIN QUAD	QUAD 4 V	DERIMING GAS VALVE	BETW WALKWY	SG	16.00	GL	Y	M
8790	D	178	2	77	MAIN QUAD	QUAD 4 V	DERIMING GAS VALVE	BETW WALKWY	SG	16.00	GL	Y	M

TABLE 78
REGISTRATION OF COMPONENTS IN BENZENE SERVICE
LIGHT OIL WASH AND BALANCING GAS AREAS, MAIN QUADS NO. 5 AND 6

8800	D	317	2	78	MAIN QUAD	R-405D	V	BENZENE OVER FLOW VALVE	OVER WALKWA	SG	16.00	G	Y	M		
8801	D	316	2	78	MAIN QUAD	R-405D	V	BENZENE OVER FLOW VALVE	OVER WALKWA	SG	16.00	G	Y	M		
8802	D	310	2	78	MAIN QUAD	R-405C	V	BENZENE OVER FLOW VALVE	OVER WALKWA	SG	16.00	G	Y	M		
8803	D311		2	78	MAIN QUAD	R-405C	V	BENZENE OVER FLOW VALVE	OVER WALKWA	SG	16.00	G	Y	M	ADDED 12-95	
8804	D	303	2	78	MAIN QUAD	R-405B	V	BENZENE OVER FLOW VALVE	OVER WALKWA	SG	16.00	G	Y	M		
8805	D305		2	78	MAIN QUAD	R-405B	V	BENZENE OVER FLOW VALVE	OVER WALKWA	SG	16.00	G	Y	M	ADDED 12-95	
8806	D	295	2	78	MAIN QUAD	R-405A	V	DERIMING GAS VALVE	OVER WALKWA	SG	16.00	G	Y	M		
8807	D	296	2	78	MAIN QUAD	R-405A	V	DERIMING GAS VALVE	OVER WALKWA	SG	16.00	G	Y	M		
8815	D	313	2	78	MAIN QUAD	R-405D	V	DERIMING GAS VALVE	OVER WALKWA	SG	16.00	G	Y	M		
8816	D	314	2	78	MAIN QUAD	R-405D	V	DERIMING GAS VALVE	OVER WALKWA	SG	16.00	G	Y	M		
8817	D	315	2	78	MAIN QUAD	R-405D	V	DERIMING GAS VALVE	OVER WALKWA	SG	16.00	G	Y	M		
8818	D	307	2	78	MAIN QUAD	R-405C	V	DERIMING GAS VALVE	OVER WALKWA	SG	16.00	G	Y	M		
8819	D	308	2	78	MAIN QUAD	R-405C	V	DERIMING GAS VALVE	OVER WALKWA	SG	16.00	G	Y	M		
8820	D	301	2	78	MAIN QUAD	R-405B	V	DERIMING GAS VALVE	OVER WALKWA	SG	16.00	G	Y	M		
8821	D	302	2	78	MAIN QUAD	R-405B	V	DERIMING GAS VALVE	OVER WALKWA	SG	16.00	G	Y	M		
8822	D	298	2	78	MAIN QUAD	R-405A	V	BENZENE OVER FLOW VALVE	OVER WALKWA	SG	16.00	G	Y	M		
8823	D299		2	78	MAIN QUAD	R-405A	V	BENZENE OVER FLOW VALVE	OVER WALKWA	SG	16.00	G	Y	M	ADDED 12-95	
8830	D	247	2	78	MAIN QUAD	R-406D	V	BENZENE OVER FLOW VALVE	OVER WALKWA	SG	16.00	G	Y	M		
8831	D	248	2	78	MAIN QUAD	R-406D	V	BENZENE OVER FLOW VALVE	OVER WALKWA	SG	16.00	G	Y	M		
8832	D	257	2	78	MAIN QUAD	R-406C	V	DERIMING GAS FLOW	OVER WALKWA	SG	16.00	G	Y	M		
8833	D	273	2	78	MAIN QUAD	QUAD 6	V	DERIMING GAS FLOW	OVER WALKWA	SG	16.00	G	Y	M		
8834	D	263	2	78	MAIN QUAD	R-406B	V	DERIMING GAS FLOW	OVER WALKWA	SG	16.00	G	Y	M		
8835	D	262	2	78	MAIN QUAD	R-406B	V	DERIMING GAS FLOW	OVER WALKWA	SG	16.00	G	Y	M		
8836	D	269	2	78	MAIN QUAD	R-406A	V	DERIMING GAS FLOW	OVER WALKWA	SG	16.00	G	Y	M		
8837	D	268	2	78	MAIN QUAD	R-406A	V	DERIMING GAS FLOW	OVER WALKWA	SG	16.00	G	Y	M		
8845	D	249	2	78	MAIN QUAD	R-406D	V	DERIMING GAS FLOW	OVER WALKWA	SG	16.00	G	Y	M		
8846	D	250	2	78	MAIN QUAD	R-406D	V	DERIMING GAS FLOW	OVER WALKWA	SG	16.00	G	Y	M		
8847	D	251	2	78	MAIN QUAD	R-406D	V	DERIMING GAS FLOW	OVER WALKWA	SG	16.00	G	Y	M		
8848	D	254	2	78	MAIN QUAD	R-406C	V	BENZENE OVER FLOW VALVE	OVER WALKWA	SG	16.00	G	Y	M		
8849	D	255	2	78	MAIN QUAD	R-406C	V	BENZENE OVER FLOW VALVE	OVER WALKWA	SG	16.00	G	Y	M		
8850	D	261	2	78	MAIN QUAD	R-406B	V	BENZENE OVER FLOW VALVE	OVER WALKWA	SG	16.00	G	Y	M		
8851	D	260	2	78	MAIN QUAD	R-406B	V	BENZENE OVER FLOW VALVE	OVER WALKWA	SG	16.00	G	Y	M		
8852	D	267	2	78	MAIN QUAD	R-406A	V	BENZENE OVER FLOW VALVE	OVER WALKWA	SG	16.00	G	Y	M		
8853	D	266	2	78	MAIN QUAD	R-406A	V	BENZENE OVER FLOW VALVE	OVER WALKWA	SG	16.00	G	Y	M		
8860	D	287	2	78	MAIN QUAD	QUAD 5	SG	LO WASH SIGHT GLASS	BETW WALKWY	LOM	57.63	L	Y	MIU	LO WASH	
8861	D	288	2	78	MAIN QUAD	QUAD 5	V	LO WASH VALVE MAIN CUT OFF QUAD 5	BETW WALKWY	LOM	57.63	L	Y	MIU	LO WASH	
8862	D	286	2	78	MAIN QUAD	QUAD 5	V	LO WASH VALVE	BETW WALKWY	LOM	57.63	L	Y	MIU	LO WASH	
8863	D	285	2	78	MAIN QUAD	QUAD 5	V	LO WASH REGULATER	BETW WALKWY	LOM	57.63	L	Y	MIU	LO WASH	
8864	D	284	2	78	MAIN QUAD	QUAD 5	V	LO WASH VALVE	BETW WALKWY	LOM	57.63	L	Y	MIU	LO WASH	
8865	D	272	2	78	MAIN QUAD	QUAD 6	V	LO WASH VALVE	BETW WALKWY	LOM	57.63	L	Y	MIU	LO WASH	
8866	D	256	2	78	MAIN QUAD	R-406C	V	LO WASH VALVE	BETW WALKWY	LOM	57.63	L	Y	MIU	LO WASH	
8867	D	274	2	78	MAIN QUAD	QUAD 6	V	LO WASH VALVE	BETW WALKWY	LOM	57.63	L	Y	MIU	LO WASH	
8868	D	271	2	78	MAIN QUAD	QUAD 6	V	LO WASH VALVE	BETW WALKWY	LOM	57.63	L	Y	MIU	LO WASH	
8869	D	275	2	78	MAIN QUAD	QUAD 6	RG	LO WASH REGULATER	BETW WALKWY	LOM	57.63	L	Y	MIU	LO WASH	
8870	D	276	2	78	MAIN QUAD	QUAD 6	V	LO WASH VALVE	BETW WALKWY	LOM	57.63	L	Y	MIU	LO WASH	
8871	D	277	2	78	MAIN QUAD	QUAD 6	V	LO WASH SIGHT GLASS	BETW WALKWY	LOM	57.63	L	Y	MIU	LO WASH	
8872	D	278	2	78	MAIN QUAD	QUAD 6	V	LO WASH VALVE MAIN CUTOFF QUAD 6	BETW WALKWY	LOM	57.63	L	Y	MIU	LO WASH	
8880	D	292	2	78	MAIN QUAD	QUAD 5	V	DERIMING GAS VALVE	BETW WALKWY	SG	16.00	GL	Y	M		
8881	D	289	2	78	MAIN QUAD	QUAD 5	V	DERIMING GAS VALVE	BETW WALKWY	SG	16.00	GL	Y	M		
8882	D	293	2	78	MAIN QUAD	QUAD 5	V	DERIMING GAS VALVE	BETW WALKWY	SG	16.00	GL	Y	M		
8883	D	291	2	78	MAIN QUAD	QUAD 5	V	DERIMING GAS VALVE	BETW WALKWY	SG	16.00	GL	Y	M		

ED_002508A_00000396-00048

8884	D	290	2	78	MAIN QUAD	QUAD 5 V	DERIMNG GAS VALVE	BETW WALKWY	SG	16.00	GL	Y	M
8885	D	279	2	78	MAIN QUAD	QUAD 6 V	DERIMNG GAS VALVE	BETW WALKWY	SG	16.00	GL	Y	M
8886	D	283	2	78	MAIN QUAD	QUAD 6 V	DERIMNG GAS VALVE	BETW WALKWY	SG	16.00	GL	Y	M
8887	D	280	2	78	MAIN QUAD	QUAD 6 V	DERIMNG GAS VALVE	BETW WALKWY	SG	16.00	GL	Y	M
8888	D	282	2	78	MAIN QUAD	QUAD 6 V	DERIMNG GAS VALVE	BETW WALKWY	SG	16.00	GL	Y	M
8889	D	281	2	78	MAIN QUAD	QUAD 6 V	DERIMNG GAS VALVE	BETW WALKWY	SG	16.00	GL	Y	M

TABLE 79
REGISTRATION OF COMPONENTS IN BENZENE SERVICE
LIGHT OIL WASH AND BALANCING GAS AREAS, MAIN QUAD NO. 7

8900	D	345	2	79	MAIN QUAD	R-407A	V	BENZENE OVER FLOW VALVE	OVER WALKWA	SG	16.00	G	Y	M	
8901			2	79	MAIN QUAD	R-407A	V	BENZENE OVER FLOW VALVE	OVER WALKWA	SG	16.00	G	Y	M	ADDED 12-95
8902	D	350	2	79	MAIN QUAD	R-407B	V	BENZENE OVER FLOW VALVE	OVER WALKWA	SG	16.00	G	Y	M*	
8903			2	79	MAIN QUAD	R-407B	V	BENZENE OVER FLOW VALVE	OVER WALKWA	SG	16.00	G	Y	M*	ADDED 12-95
8904	D	353	2	79	MAIN QUAD	R-407C	V	BENZENE OVER FLOW VALVE	OVER WALKWA	SG	16.00	G	Y	M	
8905			2	79	MAIN QUAD	R-407C	V	BENZENE OVER FLOW VALVE	OVER WALKWA	SG	16.00	G	Y	M	ADDED 12-95
8906	D	357	2	79	MAIN QUAD	R-407D	V	BENZENE OVER FLOW VALVE	OVER WALKWA	SG	16.00	G	Y	M	
8907			2	79	MAIN QUAD	R-407D	V	BENZENE OVER FLOW VALVE	OVER WALKWA	SG	16.00	G	Y	M	ADDED 12-95
8910	D	354	2	79	MAIN QUAD	R-407C	V	BENZENE OVER FLOW VALVE	OVER WALKWA	SG	16.00	G	Y	M	
8920			2	79	MAIN QUAD	QUAD 7	V	LO WASH VALVE	BETW WALKWY	LOM	57.63	L	Y	MIU	LO WASH, ADDED 12-95
8921	D	386	2	79	MAIN QUAD	QUAD 7	V	LO WASH VALVE	BETW WALKWY	LOM	57.63	L	Y	MIU	LO WASH
8923	D	383	2	79	MAIN QUAD	QUAD 7	V	LO WASH VALVE	BETW WALKWY	LOM	57.63	L	Y	MIU	LO WASH
8924	D	387	2	79	MAIN QUAD	QUAD 7	V	DERIMING GAS VALVE	BETW WALKWY	SG	16.00	GL	Y	M	
8925	D	388	2	79	MAIN QUAD	QUAD 7	V	DERIMING GAS VALVE	BETW WALKWY	SG	16.00	GL	Y	M	
8926	D	389	2	79	MAIN QUAD	QUAD 7	V	DERIMING GAS VALVE	BETW WALKWY	SG	16.00	GL	Y	M	
8927	D	390	2	79	MAIN QUAD	QUAD 7	V	DERIMING GAS VALVE	BETW WALKWY	SG	16.00	GL	Y	M	
8928	d392		2	79	MAIN QUAD	QUAD 7		DERIMING GAS VALVE	BETW WALKWY	SG	16.00	GL	Y	M	ADDED 12-95
8929	d393		2	79	MAIN QUAD	QUAD 7		DERIMING GAS VALVE	BETW WALKWY	SG	16.00	GL	Y	M	ADDED 12-95

ED_002508A_00000396-00050

TABLE 80
REGISTRATION OF COMPONENTS IN BENZENE SERVICE
LIGHT OIL REGENERATION AREA

6550	F	425	2	80	LO REGEN	R-590	V	SUB GAS BY PASS TO CARBONATE VALVE	AREA	SG	16.00	G	Y	M	
6551	F	434	2	80	LO REGEN	R-590	RG	SUB GAS BY PASS TO CARBONATE REGULATOR	AREA	SG	16.00	G	Y	M	NEW 6/93
6552	F	447	2	80	LO REGEN	R-590	V	SUB GAS BY PASS TO CARBONATE VALVE	AREA	SG	16.00	G	Y	M	
6553	F	437	2	80	LO REGEN	R-590	SW	SUBGAS BYPASS TO CARBONATE 35PSIG SWITCH	AREA	SG	16.00	G	Y	M	
6554	F	435	2	80	LO REGEN	R-590	V	SUB GAS BY PASS TO CARBONATE VALVE	AREA	SG	16.00	G	Y	M	
6555	F	436	2	80	LO REGEN	R-590	G	SUB GAS BY PASS TO CARBONATE GAUGE	AREA	SG	16.00	G	Y	M	NEW 6/93
6556	F	433	2	80	LO REGEN	R-590	V	SUB GAS BY PASS TO CARBONATE VALVE	AREA	SG	16.00	G	Y	M	NEW 6/93
6557			2	80	LO REGEN	R-590		SUB GAS BY PASS TO CARBONATE VALVE	AREA	SG	16.00	G	Y	M	NEW 6/93
6558			2	80	LO REGEN	R-590		SUB GAS BY PASS TO CARBONATE VALVE	AREA	SG	16.00	G	Y	M	ADDED 12-95
6559	F	426	2	80	LO REGEN	R-590	V	SUB GAS BY PASS TO CARBONATE VALVE	AREA	SG	16.00	G	Y	M	ADDED 12-95
6560	F	427	2	80	LO REGEN	R-590	V	SUB GAS BY PASS TO CARBONATE VALVE	AREA	SG	16.00	G	Y	M	
6561	F	448	2	80	LO REGEN	R-590	V	SUB GAS BY PASS TO CARBONATE VALVE	AREA	SG	16.00	G	Y	M	NEW 6/93
6562	F	428	2	80	LO REGEN	R-590	RG	SUB GAS BY PASS TO CARBONATE REGULATOR	AREA	SG	16.00	G	Y	M	
6563	F	438	2	80	LO REGEN	R-590	V	SUB GAS BY PASS TO CARBONATE VALVE	AREA	SG	16.00	G	Y	M	NEW 6/93
6564	F	439	2	80	LO REGEN	R-590	V	SUB GAS BY PASS TO CARBONATE VALVE	AREA	SG	16.00	G	Y	M	NEW 6/93
6565	F	440	2	80	LO REGEN	R-590	V	SUBGAS BYPASS TO CARBONATE PRESSURE	AREA	SG	16.00	G	Y	M	NEW 12/93
6566	F	429	2	80	LO REGEN	R-590	V	SUB GAS BY PASS TO CARBONATE VALVE	AREA	SG	16.00	G	Y	M	NEW 12/93
6567	F	430	2	80	LO REGEN	R-590	V	SUB GAS BY PASS TO CARBONATE GAUGE	AREA	SG	16.00	G	Y	M	NEW 6/93
6568	F	431	2	80	LO REGEN	R-590	AL	SUB GAS BYPASS TO CARBONATE 30PSIG ALARM	AREA	SG	16.00	G	Y	M	NEW 6/93
6569	F	441	2	80	LO REGEN	R-590	V	SUB GAS BY PASS TO CARBONATE VALVE	AREA	SG	16.00	G	Y	M	NEW 6/93
6570	F	445	2	80	LO REGEN	R-590	V	SUBGAS BYPASS TO CARBONATE BOT CLEANOUT	AREA	SG	16.00	G	Y	M	
6571	F	442	2	80	LO REGEN	R-590	V	SUBGAS BYPASS TO CARBONATE CONTROL VALVE	AREA	SG	16.00	G	Y	M	
6572	F	446	2	80	LO REGEN	R-590	V	SUBGAS BYPASS TO CARBONATE BOT CLEANOUT	AREA	SG	16.00	G	Y	M	
6573	F	443	2	80	LO REGEN	R-590	V	SUB GAS BY PASS TO CARBONATE VALVE	AREA	SG	16.00	G	Y	M	
6574	F	444	2	80	LO REGEN	R-590	V	SUB GAS BY PASS TO CARBONATE BLOCKING VALVE	AREA	SG	16.00	G	Y	M	

ED_002508A_00000396-00051

TABLE 81
REGISTRATION OF COMPONENTS IN BENZENE SERVICE
LIGHT OIL DECANT VENTING SYSTEM

1900	E	510	2	81	LO DECANT D-604/60 V	VENT SYSTEM VALVE	SECOND LEVEL	LO	57.63	G	Y	MU	
1901	E	511	2	81	LO DECANT D-604/60 V	VENT SYSTEM VALVE	SECOND LEVEL	LO	57.63	G	Y	MU	
1902	E	512	2	81	LO DECANT D-604/60 V	VENT SYSTEM CLEANOUT VALVE	SECOND LEVEL	LO	57.63	G	Y	MU	
1910	E	329	2	81	DECANTERS D-604/60 V	VENT SYSTEM VALVES TO MVM	THIRD LEVEL	LO	57.63	G	Y	MU	
1911	E	328	2	81	DECANTERS D-604/60 V	VENT SYSTEM VALVES TO MVM	THIRD LEVEL	LO	57.63	G	Y	MU	
1912	E	325	2	81	DECANTERS D-604/60 V	VENT SYSTEM VALVES TO MVM	THIRD LEVEL	LO	57.63	G	Y	MU	
1913	E	326	2	81	DECANTERS D-604/60 V	VENT SYSTEM VALVES TO MVM	THIRD LEVEL	LO	57.63	G	Y	MU	
1914	E	330	2	81	DECANTERS D-604/60 V	VENT SYSTEM VALVES TO MVM	THIRD LEVEL	LO	57.63	G	Y	MU	
1915	E	327	2	81	DECANTERS D-604/60 V	VENT SYSTEM VALVES TO MVM	THIRD LEVEL	LO	57.63	G	Y	MU	
1920	E	320	2	81	DECANTERS D-604/60 V	VENT SYSTEM VALVES TO MVM	THIRD LEVEL	LO	57.63	G	Y	MU	
1921	E	324	2	81	DECANTERS D-604/60 V	VENT SYSTEM VALVES TO MVM	THIRD LEVEL	LO	57.63	G	Y	MU	
1922	E	321	2	81	DECANTERS D-604/60 V	VENT SYSTEM VALVES TO MVM	THIRD LEVEL	LO	57.63	G	Y	MU	
1925	E	322	2	81	DECANTERS D-604/60 V	VENT SYSTEM VALVES TO MVM	THIRD LEVEL	LO	57.63	G	Y	MU	
1930	E	319	2	81	DECANTERS D-604/60 V	VENT SYSTEM VALVES TO MVM	THIRD LEVEL	LO	57.63	G	Y	MU	
1931	E	533	2	81	DECANTERS D-604/60 V	VENT SYSTEM CLEANOUT	THIRD LEVEL	LO	57.63	G	Y	MU	
1932	E	317	2	81	DECANTERS D-604/60 V	VENT SYSTEM VALVES TO MVM	THIRD LEVEL	LO	57.63	G	Y	MU	
1933	E	316	2	81	DECANTERS D-604/60 V	VENT SYSTEM VALVES TO MVM	THIRD LEVEL	LO	57.63	G	Y	MU	
1934			2	81	DECANTERS D-604/60 V	VENT SYSTEM CLEANOUT	THIRD LEVEL	LO	57.63	G	Y	MU	ADDED 12-95
1934	E	318	2	81	DECANTERS D-604/60 V	VENT SYSTEM VALVES TO MVM	THIRD LEVEL	LO	57.63	G	Y	MU	
1935	E	315	2	81	DECANTERS D-604/60 V	VENT SYSTEM VALVES TO MVM	THIRD LEVEL	LO	57.63	G	Y	MU	
1940	E	532	2	81	DECANTERS D-604/60 PD	VENT SYSTEM PRESSURE TRANSDUCER 6040	THIRD LEVEL	LO	57.63	G	Y	MU	
1941	E	531	2	81	DECANTERS D-604/60 G	VENT SYSTEM PRESSURE GAUGE	THIRD LEVEL	LO	57.63	G	Y	MU	
1942	E	530	2	81	DECANTERS D-604/60 V	VENT SYSTEM PRESSURE TAP	THIRD LEVEL	LO	57.63	G	Y	MU	
1943	E	314	2	81	DECANTERS D-604/60 V	VENT SYSTEM VALVES TO MVM	THIRD LEVEL	LO	57.63	G	Y	MU	
1944	E	529	2	81	DECANTERS D-604/60 V	VENT SYSTEM PRESSURE TAP CLEANOUT	THIRD LEVEL	LO	57.63	G	Y	MU	
1945	E	528	2	81	DECANTERS D-604/60 PD	VENT SYSTEM PRESSURE TRANSDUCER 6019	THIRD LEVEL	LO	57.63	G	Y	MU	
1946	E	527	2	81	DECANTERS D-604/60 G	VENT SYSTEM PRESSURE GAUGE	THIRD LEVEL	LO	57.63	G	Y	MU	
1947	E	526	2	81	DECANTERS D-604/60 V	VENT SYSTEM PRESSURE TAP CLEANOUT	THIRD LEVEL	LO	57.63	G	Y	MU	
1948	E	525	2	81	DECANTERS D-604/60 V	VENT SYSTEM PRESSURE TAP	THIRD LEVEL	LO	57.63	G	Y	MU	
1949	E	524	2	81	DECANTERS D-604/60 V	VENT SYSTEM PRESSURE TAP VALVE	THIRD LEVEL	LO	57.63	G	Y	MU	
1950	E	534	2	81	DECANTERS D-604/60 SW	VENT SYSTEM PRESSURE SWITCH 6028A	THIRD LEVEL	LO	57.63	G	Y	MU	
1951	E	313	2	81	DECANTERS D-604/60 V	VENT SYSTEM VALVES TO MVM	THIRD LEVEL	LO	57.63	G	Y	MU	
1960	E	312	2	81	DECANTERS D-604/60 V	VENT SYSTEM VALVES TO MVM	THIRD LEVEL	LO	57.63	G	Y	MU	
1961	E	520	2	81	DECANTERS D-604/60 V	VENT SYSTEM PRESSURE TAP CLEANOUT	THIRD LEVEL	LO	57.63	G	Y	MU	
1962	E	521	2	81	DECANTERS D-604/60 V	VENT SYSTEM PRESSURE TAP	THIRD LEVEL	LO	57.63	G	Y	MU	
1963	E	522	2	81	DECANTERS D-604/60 G	VENT SYSTEM PRESSURE TAP GAUGE	THIRD LEVEL	LO	57.63	G	Y	MU	
1964	E	523	2	81	DECANTERS D-604/60 PD	VENT SYSTEM PRESSURE TRANSDUCER 6006	THIRD LEVEL	LO	57.63	G	Y	MU	

ED_002508A_00000396-00052

INDEX OF USS CLAIRTON
NESHAPS DRAWINGS

FIG #	SUBJECT
1	Main Axi Compr C-100
2	Main Axi Compr C-105
3	Main Axi Compr C-110
4	Main Axi Compr C-115
5	Main Axi Compr C-120
6	Main Axi Compr C-125
7	Main Axi Compr C-130
8	Main Axi Compr C-135
9	Main Axi Compr C-140
10	Main Axi Compr C-145
11	Main Axi Compr C-150
12	Main Axi Compr C-155
13	Main Axi Compr C-160
14	Main Axi Compr C-165
15	Main Axi Compr C-170
16	Main Axi Compr C-175
17	Main Axi Compr C-180
18	Main Axi Compr C-185
19	LO Tanks, Final Cool
20	Final Coolers T-201/2/3/6
21	Super Still T207
22	Super Still Spirals
23	Vac Machine C-500
24	Vac Manhine C-503
25	Vac Machine C-506
26	Vac Machine C-509
27	Dual Axi C-512
28	Dual Axi C-515
29	Dual Axi C-518
30	Dual Axi C-521
31	Dual Axi C-524
32	Dual Axi C-527
33	Dual Axi C-530
34	Dual Axi C-533
35	Dual Axi C-536
36	Dual Axi C-539
37	Dual Axi C-542
38	Dual Axi C-545
39	Dual Axi C-548
40	Quad 1
41	Quad 2
42	Quad 3
43	Quad 4
44	Quad 5
45	Quad 6
46	Quad 7
47	Sub Gas Inj Water Sep
48	Sub Gas Water Coolers
49	Sub Gas Water Separator
50	Sub Gas Ammonia Coolers
51	Sub Gas Amm Cool Sep
52	Sub Gas Dual Axi Hdr
53	Lite Oil Regenerator R-582
54	Lite Oil Regenerator R-584
55	Lite Oil Regenerator R-586
56	Lite Oil Regenerator R-590
57	LO Regen R584
58	SSG Inj Wat Sep D600
59	SSG Wat Cool E639,40
60	SSG Wat Sep D602
61	SSG Amm Cool E641,42
62	SSG Amm Sep D624
63	LO Decant D604,05
64	LO Transfer Pumps
65	LO Tx Line to Aristech
66	LO Wash - Heat Exch
67	LO Wash - Bldwn Tank
68	LO Wash - Bldwn Pumps
69	Quad 1 Bottom Wash
70	Quad 2 Bottom Wash
71	Quad 3 Bottom Wash
72	Quad 4 Bottom Wash
73	Quad 5 Bottom Wash
74	Quad 6 Bottom Wash
75	Quad 7 Bottom Wash
76	Quad 1/2 Top Wash
77	Quad 3/4 Top Wash
78	Quad 5/6 Top Wash
79	Quad 7 Top Wash
80	Sub Gas Bypass to Carb
81	Lite Oil Decanter Vents

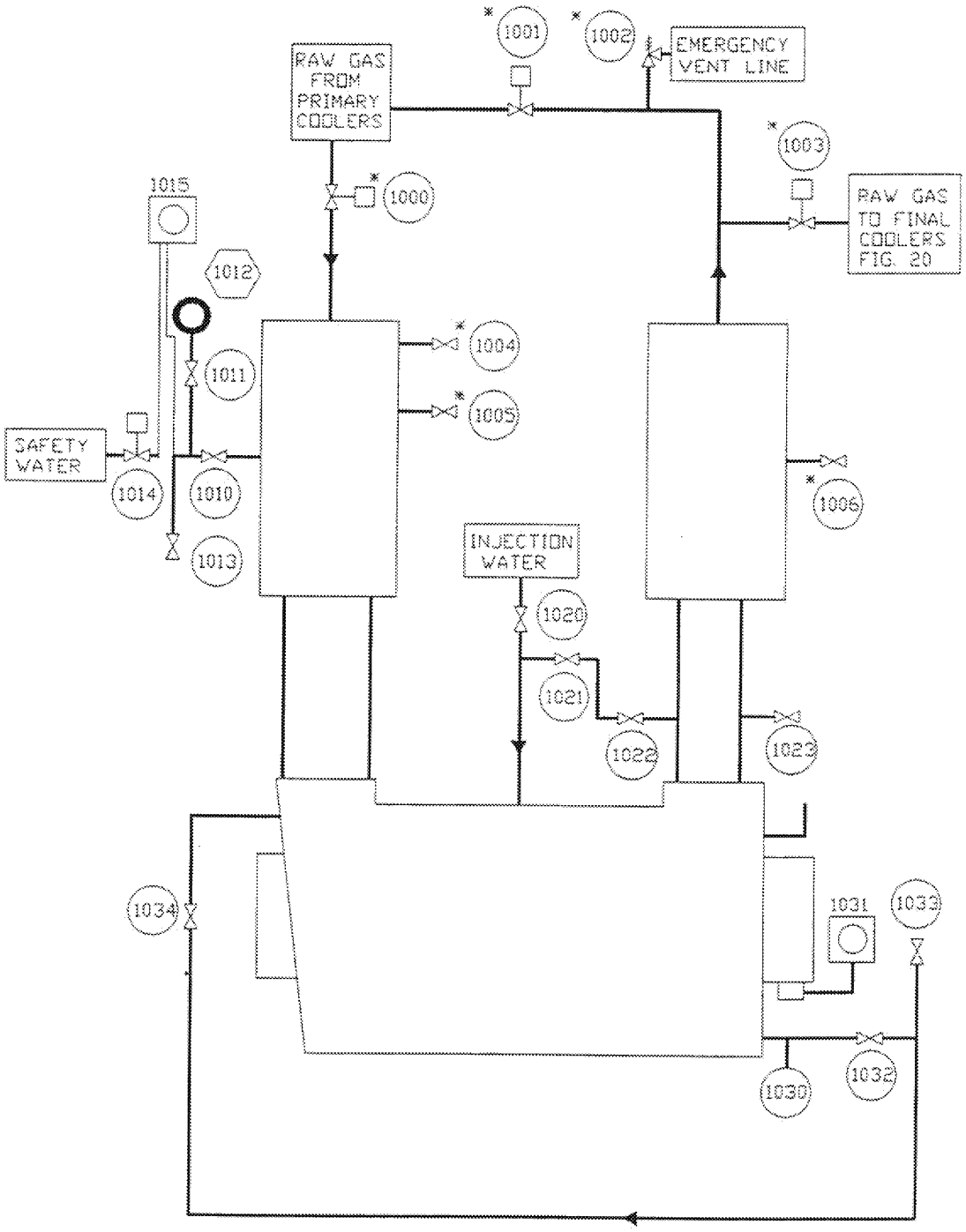

* THESE VALVES NOT ACCESSIBLE

FIGURE 1

MAIN AXI COMPRESSOR C-100
BY-PRODUCT, CONTROL ROOM #1
USX, CLAIRTON COKE WORKS

ADVANCED TECHNOLOGY SYSTEMS INC.

ATS

PREPARED BY	CHECKED BY
AMK	
DATE	PROJECT #
12/08/95	
DWG.	

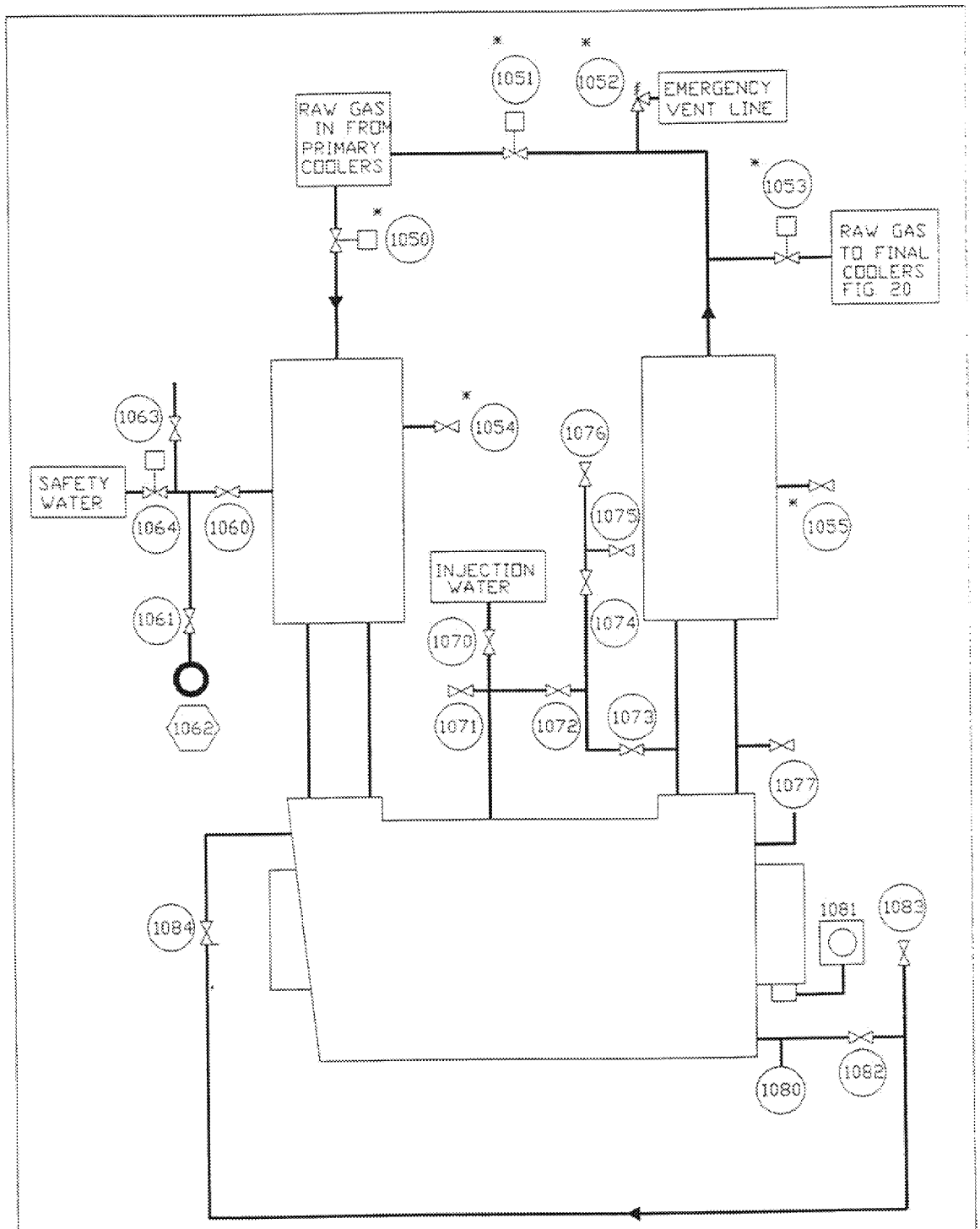

* THESE VALVES NOT ACCESSIBLE

FIGURE 2

MAIN AXI COMPRESSOR C-105
BY-PRODUCT, CONTROL ROOM #1
USX, CLAIRTON COKE WORKS

ADVANCED TECHNOLOGY SYSTEMS INC.

ATS

PREPARED BY	CHECKED BY
AMK	
DATE	PROJECT #
12/08/95	
DWG.	

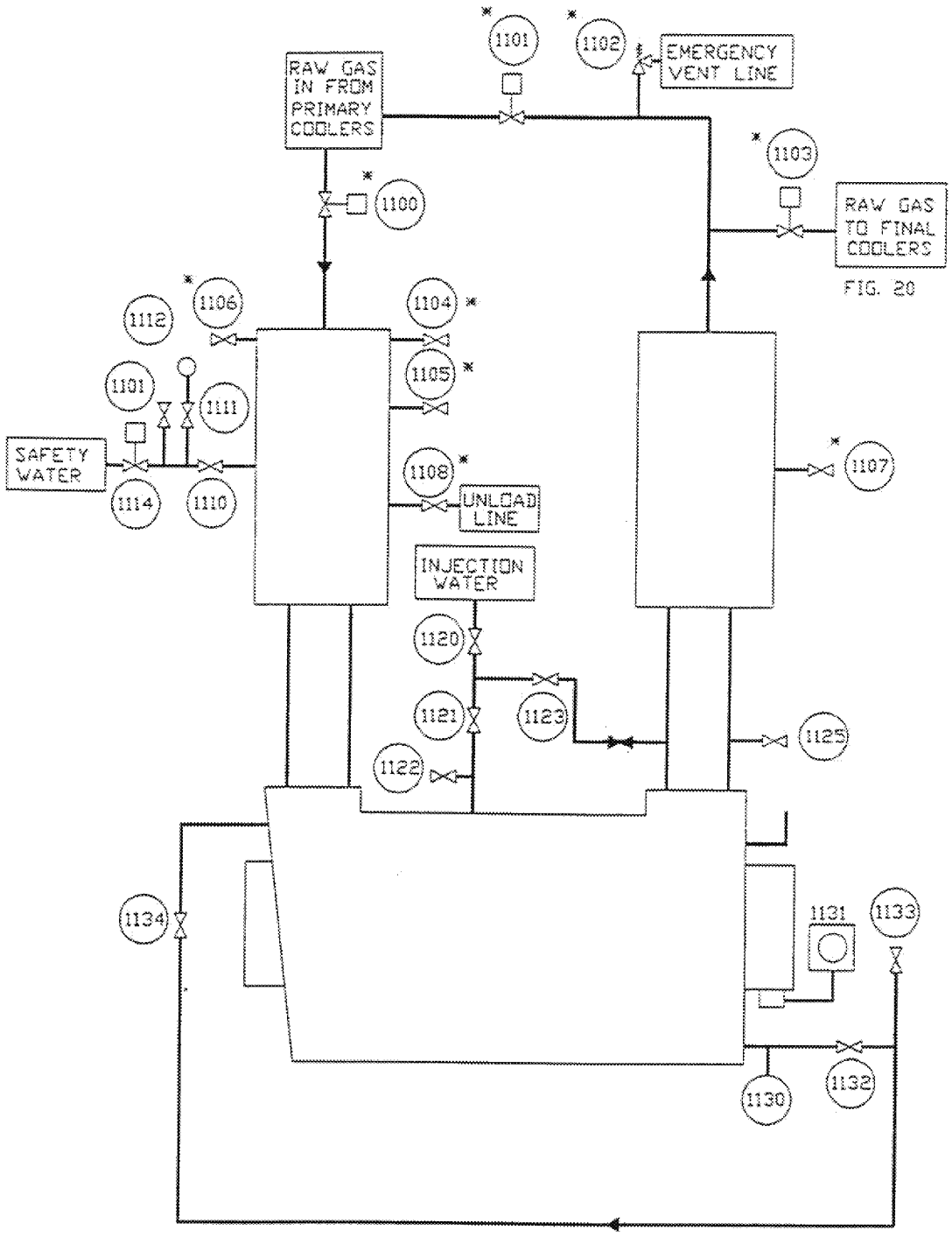

* THESE VALVES NOT ACCESSIBLE

FIGURE 3

MAIN AXI COMPRESSOR C-110
BY-PRODUCT, CONTROL ROOM #1
USX, CLAIRTON COKE WORKS

ADVANCED TECHNOLOGY SYSTEMS INC.

PREPARED BY	CHECKED BY
AMK	
DATE	PROJECT #
12/08/95	
DWG.	

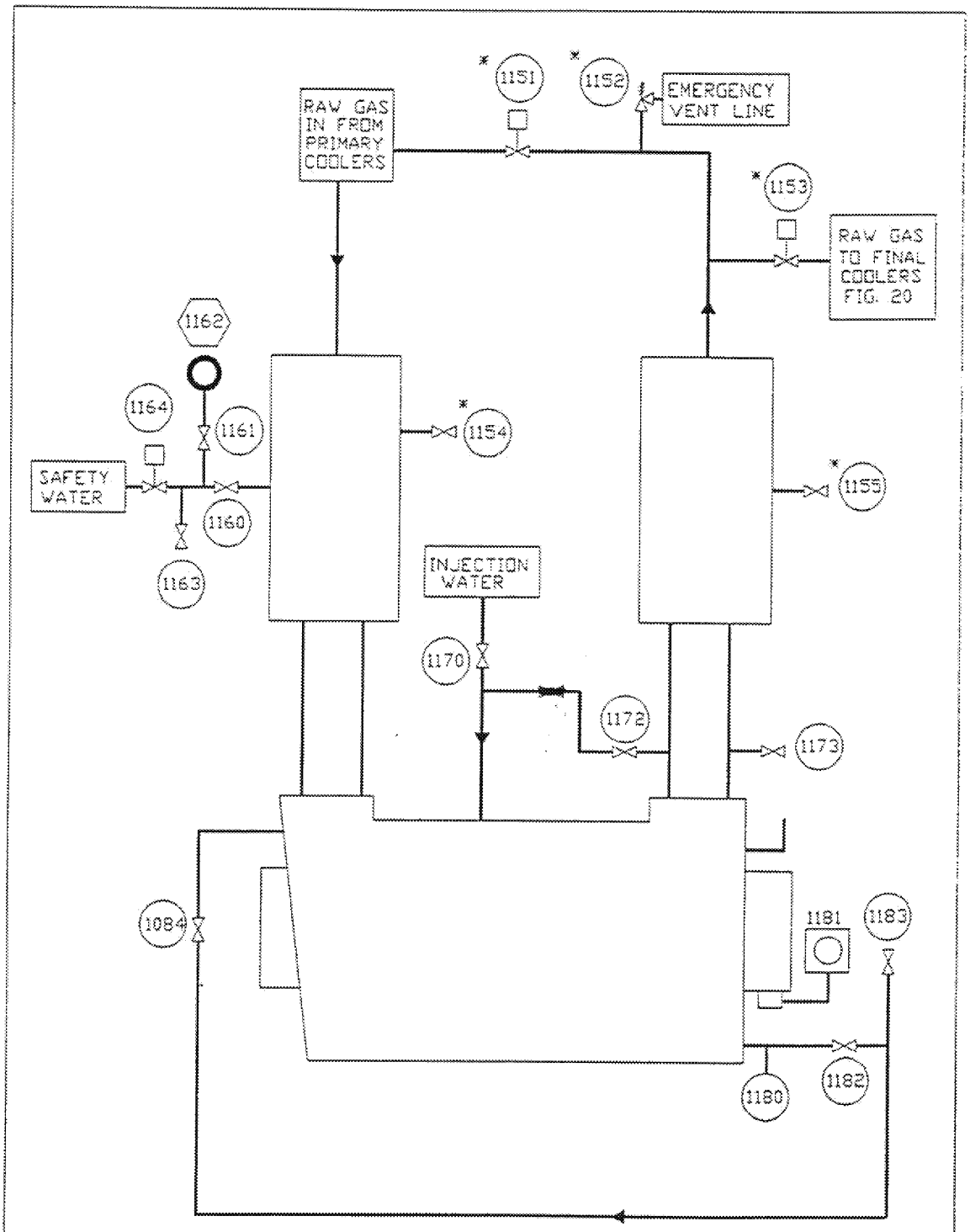

* THESE VALVES NOT ACCESSIBLE

FIGURE 4

MAIN AXI COMPRESSOR C-115
BY-PRODUCT, CONTROL ROOM #1
USX, CLAIRTON COKE WORKS

ADVANCED TECHNOLOGY SYSTEMS INC.

ATS

PREPARED BY	CHECKED BY
AMK	
DATE	PROJECT #
12/08/95	
DWG.	

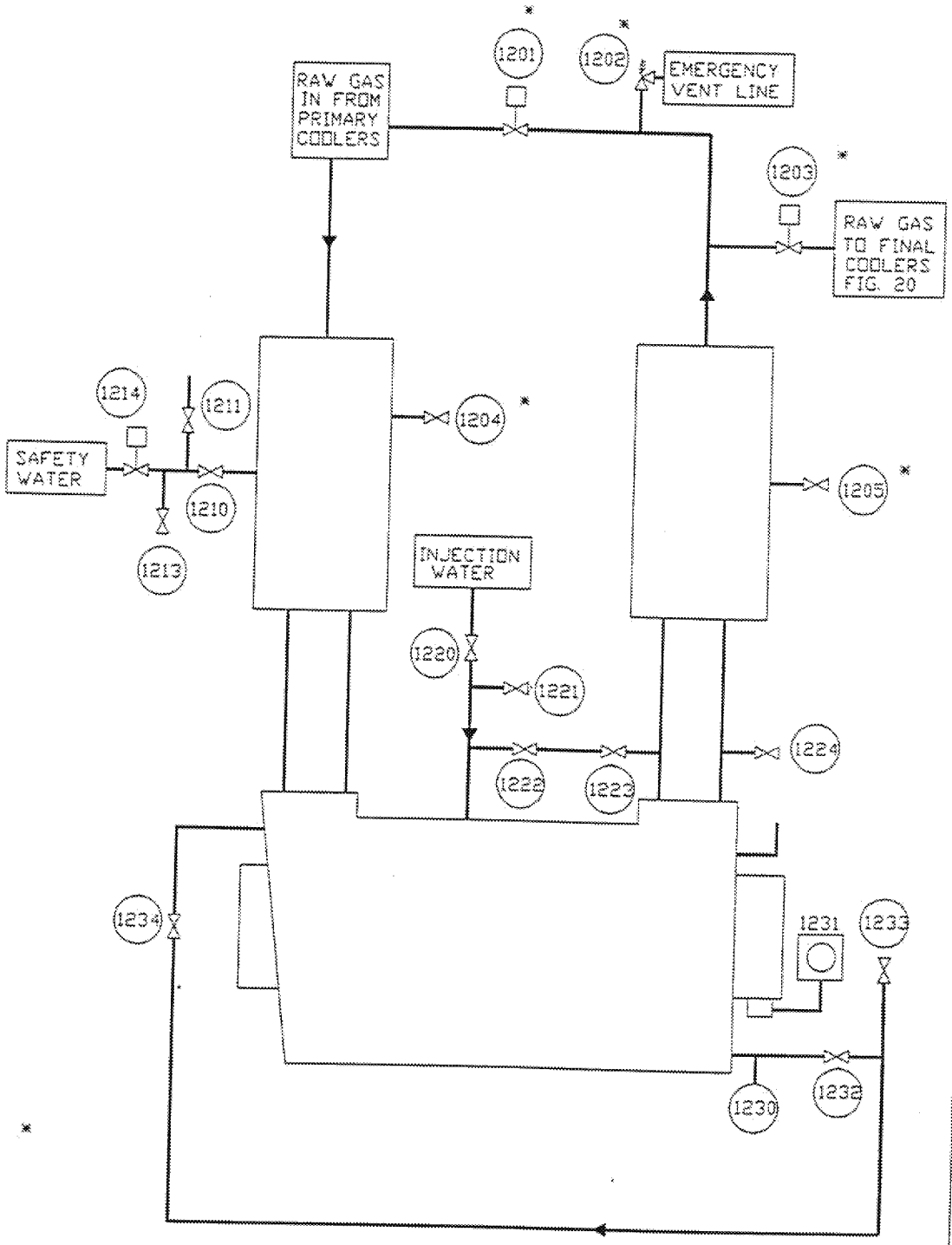

* THESE VALVES NOT ACCESSIBLE

FIGURE 5

MAIN AXI COMPRESSOR C-120
BY-PRODUCT, CONTROL ROOM #1
USX, CLAIRTON COKE WORKS

ADVANCED TECHNOLOGY SYSTEMS INC.

ATS

PREPARED BY	CHECKED BY
AMK	
DATE	PROJECT #
12/08/95	
DWG.	

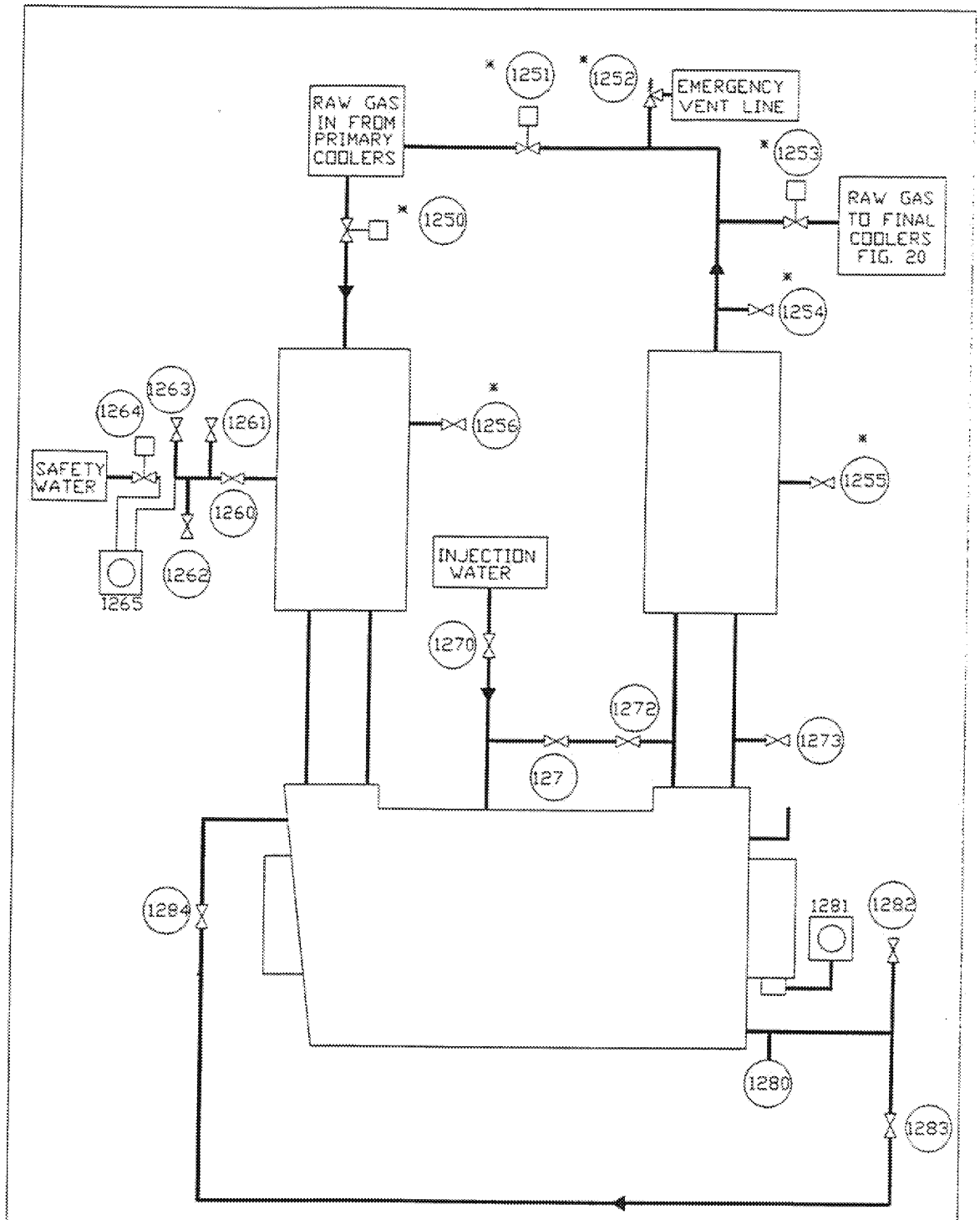

* THESE VALVES NOT ACCESSIBLE

FIGURE 6

MAIN AXI COMPRESSOR C-125
BY-PRODUCT, CONTROL ROOM #1
USX, CLAIRTON COKE WORKS

ADVANCED TECHNOLOGY SYSTEMS INC.

ATS

PREPARED BY	CHECKED BY
AMK	
DATE	PROJECT #
12/08/95	
DWG.	

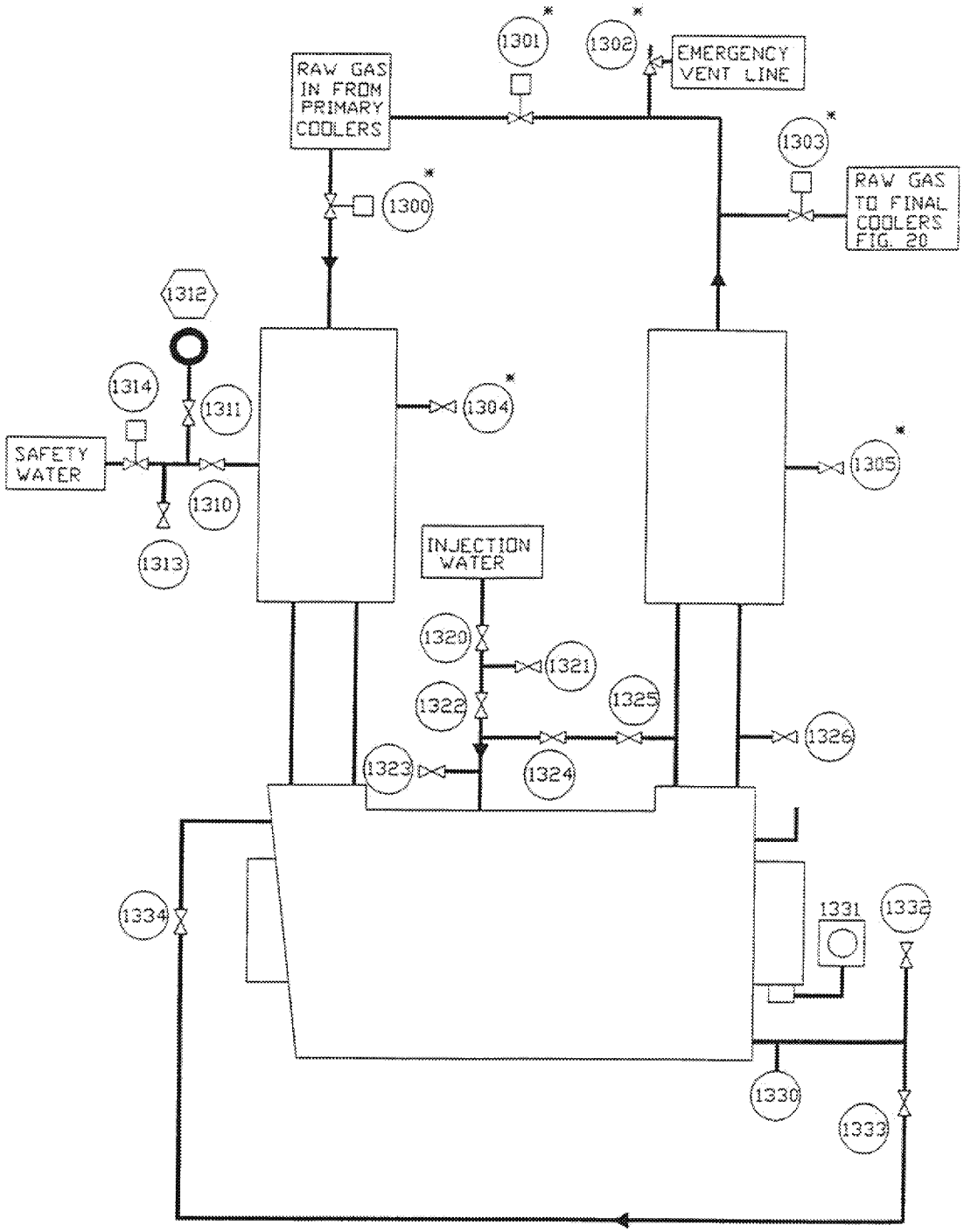

* THESE VALVES NOT ACCESSIBLE

FIGURE 7

MAIN AXI COMPRESSOR C-130
BY-PRODUCT, CONTROL ROOM #1
USX, CLAIRTON COKE WORKS

ADVANCED TECHNOLOGY SYSTEMS INC.

ATS

PREPARED BY	CHECKED BY
AMK	
DATE	PROJECT #
12/11/95	
DWG.	