6.6.4 Recommended Spare Parts

The following table shows spare parts and consumables. For the complete list of manufacturer's spare parts, refer to the Instruction Manual.

PART NUMBER	DESCRIPTION
4121	Capillary - ozone - 10 mil
4113	Capillary - sample - 5 mil
4126	Capillary - bypass - 20 mil
4157	Charcoal
6998	Desiccant
4510	Fuse
8138	Solenoid
4800	O-ring capillary
9464	Twin Head Pump Repair Kit
5013	Bypass Pump Repair Kit

6.7. NO_x reports

6.7.1 Daily NO_x reports

Two styles of daily reports for NO_x are available for printing on the printer. The first report prints the average value for every minute in any calendar day. The second report is a line graph of one minute values. The first report included other status information such as fault conditions and calibration status. A sample of each report is included in Appendix C of this document.

6.7.2. Quarterly NO_x reports

A sample quarterly NO_x report as required by US EPA and Pennsylvania Department of Environmental Resources (DER) is included in Appendix C of this document.

6.8. Parameters monitored by SNIFFER

Allen Bradley PLC (RDCN) monitors a signal from the Thermo Environmental Instruments, Inc. NO_x analyzer corresponding to NOx ppm. It also monitors two digital lines which indicate when the NOx analyzer is performing calibration and if the unit has failed calibration. The final signal being monitored by the remote data collection unit is an analyzer fault line. The SNIFFER data acquisition units saves to the hard disk the following data once each minute;

- NO_x ppm
- NO_x corrected to 7% oxygen.

ED_002508A_00000338-00001

- Analyzer calibration status

6.9. Rate of data collection for analyzer

The remote data collection unit takes a reading from the Thermo Environmental Instuments, Inc. NO_x analyzer once every few seconds. The SNIFFER data acquisition system requests the latest data value from the remote data collection unit four or more times each minute. These readings are averaged together in the data acquisition system to construct a one minute average. The actual analyzer reading and analyzer status information (calibration and fault status) are transmitted from the remote data collection unit to the data acquisition computer.

6.10. Schematic of monitoring system

See Appendix D of this document.

6.11. NO_x Calibration drift

The acceptable zero drift for this analyzer is ±0.2 ppm per day and the acceptable span drift for this analyzer is ±1 percent of full scale per day. These conform to the requirements defined in 40CFR60 Appendix B (Spec. 2).

As per 40CFR60 Appendix F, the analyzer must be calibrated whenever its reading drifts from the reference gas by two times the amount specified in Appendix B.

During calibration the system compares the known concentration of the span gas to the reading from the analyzer. If the reading is different, the system automatically adjusts the reading in software.

If this drift is more than twice the acceptable drift specified in 40CFR60 Appendix B, then the system warns the operator of calibration failure.

At this point the analyzer may be manually calibrated and or repaired.

6.12. Equations to Compute Corrected NO_x Emissions.

The equations used to compute the emissions follow:

Correction of NO_x to 7.0 % Oxygen on a dry basis

$$NO_x \text{ corrected} = \frac{(20.95\% - 7.0\%)}{(20.95\% - O_2\% \text{ dry})} * NO_x(\text{PPMVD})$$

6.13. Equations to Compute NO_x Mass Emissions.

The NO_x emmission is recorded in three units.

They are:

ED_002508A_00000338-00002

- NO_x analyzer readings.
- NO_x analyzer readings corrected to 7.0% oxygen.
- NO_x emmissions rate in pounds per hour.

  NO_x(lbs/hr) = NO_x(lbs/MMBtu) * (fuel consumption MMBtu/hr)

The equation used to compute NO_x emissions in (lbs per MMBtu) is defined in 40CFR60 Method 19 and is as follows:

$$E = C * F (20.9 / (20.9 - O_2\%))$$

E = emmissions in lbs/MMBtu
C = NO_x in lb/scf = NO_x(ppm) * ($1.194 * 10^{-7}$)
F = Fuel factor in dscf/MMBtu

ED_002508A_00000338-00003

7. Calibration of CEMS analyzers

Daily calibration is accomplished by routing certified calibration gases up through the sample line to the probe and back down the normal extraction gas sample path to the analyzer.

Each analyzer is first fed a zero gas to establish the base line and then fed a span gas. These two readings determine the slope and offset values used to correct the analyzer readings.

Although each analyzer may be calibrated individually, the normal, automatic calibration performed daily by the CEMS system calibrates all of the analyzers together as quickly as possible.

This is accomplished by calibrating one or more analyzers simultaneously. For example, several analyzers may be zero calibrated at the same time or one analyzers span gas may also be used as the zero gas for a second analyzer. This therefore reduces the overall time the CEMS is in calibration.

The calibration sequence described below represents the actual calibration of all analyzers in this CEMS.

The steps below do not mention the "wait" times which permit the calibration gases to purge the sample lines sufficiently. These delay times may be altered to match the length of the sample lines.

In addition to this fixed time delay, the CEMS also takes multiple readings during the sample time to insure the analyzer reading has stabilized. This helps verify the line has been completely purged and only pure calibration gas is being sampled.

ED_002508A_00000338-00004

7.1. Calibration Timing Sequence Chart

Note that the CEMS system for each boiler is calibrated independently. Further all timing constants are set independently for each system.

Step	Time seconds	Operation			Gas flowing		Comments
		Purge	Zero	Span	O_2 Span	NO_x Span	
1	120	x			x		
2	30		NO_x		x		
3	120	x					
4	30		O_2				
6	120	x			x		
7	30			O_2	x		
8	120	x				x	
9	30			NO_x		x	
10	180	x					Purge Sample Line
11							Resume Sampling

ED_002508A_00000338-00005

8. Monitored Data Points

The following signals are collected from various instruments either in the CEM analyzer cabinet or other sources at the site. One set of signals is collected for each boiler.

- O_2 Oxygen
- O_2 Analyzer fault
- NO_x Nitrogen-oxides
- NO_x Analyzer fault
- Fuel Flow Signals for each fuel
- Opacity
- Fuel Factor (Fd) for Coke Oven Gas

9. Calculated Data Points

The following values are calculated in the CEM system for each boiler.

- NO_x corrected to 7.0% O_2
- NO_x Lbs/mmBTU

10. Process Status Input

The following digital signal is read by the RDCN and recorded on the hard disk. It is used to determine number of hours of operation for the industrial boiler. The emission limit episodes are discounted while the process signal indicates the process is off.

- industrial boiler on/off Digital input

11. Alarms

The following alarms are output by the RDCN when high emissions or analyzer failure is detected. Also refer to the "Lockout" section for further specific control points.

- CEMS calibration failure Digital output
- CEMS high emissions alarm Digital output
- CEMS trouble alarm Digital output

ED_002508A_00000338-00006

12. Lockout Control

This system has no lockout requirements.

13. Emission Limits

This system determines if the process is operating by a digital input to the CEM system. This input is provided by the plant DCS and is on only during the period in which the CEM system is to test for emissions emissions exceedances.

While in operation, the CEM system will be taking readings of all pollutants, correcting them to 7 percent O2 and generating a rolling hourly average. The rolling hourly average is based on minute average calculated by the DCN. The rolling hourly average will be valid if there are a minimum of 45 valid minute averages during the last 60 minutes.

The air permit is an installation permit. It is our assumption that PADER will establish concentration limits for each of the emissions. This CEM system will contain emission limit software in the event a NOx emission limit is placed on the boilers.

The pollutants that will be measured are:

	Pollutant	Units
•	NOx corrected to 7.0% O2 Limit: (Undetermined at this time)	ppm dry
•	NOx lb/MMBTU Limit: (Undetermined at this time)	lb./MMBTU
•	NOx lb/hr Limit: (Undetermined at this time)	lb./hr

Opacity will be monitored in the stack. The instantaneous readings will be collected in real time by the RDCN. From these values both one minute and six minute averages will be calculated and stored on the DAS. For a one minute average to be valid at least 6 readings will be required. For a six minute average to be valid at least 5 minute averages must be valid.

14. Quality control / Quality Assurance

The primary guidelines for this section are those outlined in 40CFR60 Appendix F.

The quality control plan is made up of six items.

- Calibration of the CEMS analyzers on a daily basis
- Determination of calibration drift and adjustment
- Preventative maintenance of the CEMS
- Recording the data and calculation of emissions rates, and reporting the results
- Accuracy audit procedures
- Corrective actions for CEMS components which do not meet the above criteria

If the CEMS has two consecutive quarters of excessive inaccuracies then this current QA/QC plan must be re-written to correct the deficiencies.

14.1. Calibration Drift

All analyzers are calibrated using the criteria set forth in 40CFR60 Appendix F and Appendix B.

Refer to the "Calibration Drift" section for each analyzer for specific details.

If the analyzer fails the drift calibration for five consecutive days, the analyzer is considered out-of-control. In addition, if the calibration drift error is four times the applicable drift specification at any time, the analyzer is considered out-of-control.

The analyzer remains out-of-control until the completion of a calibration drift test which results in a calibration drift within the corresponding allowable calibration drift limit.

The data during the out-of-control period is marked as invalid data. All data collected from the CEMS is kept for two years.

14.2. Data Accuracy

Data accuracy is verified by performing a set of quarterly audits. There are three types of quarterly audits;

- Relative Accuracy Test Audit (RATA)
- Cylinder Gas Audit (CGA)
- Relative Accuracy Audit (RAA)

14.2.1. Relative Accuracy Test Audit (RATA)

When the CEMS is first certified this audit is one of the audits performed by the

ED_002508A_00000338-00008

stack testing firm in accordance with the performance specifications outlined in 40CFR60 Appendix B. The relative accuracy specifications are listed below:

- Performance Specification 2

  Performance Specification 2 (NO_x, SO_2) twenty (20) percent of the mean value of the reference method (RM) test data in units of emissions standard or five (5) percent of applicable emissions standard.

  If the limits defined in performance specification 2 are less than 2.5 ppm NO_x, then the minimum accuracy of 2.5 ppm NO_x will be used as outlined in the NESCAUM guide.

- Performance Specification 3

  Performance Specification 3 (O_2, CO_2) twenty (20) percent of the mean value of the reference method (RM) test data or one (1) percent O_2 or CO_2.

- Performance Specification 4

  Performance Specification 4 (CO) ten (10) percent of the mean value of the reference method (RM) test data in units of emissions standard or five (5) percent of applicable emissions standard.

  If the limits defined in performance specification 4 are less than five (5) ppm then performance specification 4A will be used.

- Performance Specification 4A

  Performance Specification 4 (CO) ten (10) percent of the mean value of the reference method (RM) test data in units of emissions standard or five (5) ppm, whichever is higher.

- Equations and calculcations

  The equations specified in

Arithmetic Mean:	EPA 40CFR60 App. B PS2 eq. 2-1
Standard Deviation:	EPA 40CFR60 App. B PS2 eq. 2-2
Confidence Coefficient:	EPA 40CFR60 App. B PS2 eq. 2-3
RA:	EPA 40CFR60 App. B PS2 eq. 2-4

All span and zero gases used for these audits must be "EPA Protocol I".

The required audit gases are found in Appendix B of this document.

14.2.2. Cylinder Gas Audits (CGA)

This audit is performed in three out of four quarters. This audit challenges the CEMS with cylinder gases of known concentration at two points for each monitored pollutant.

ED_002508A_00000338-00009

Each pollutant is monitored at a mid range which is calculated as between 20 to 30 percent of the monitors span value.

The high range is calculated as being between 50 to 60 percent of span.

The cylinder gas audit routes the audit cylinder gas through the entire CEMS; (i.e. up to stack probe and back through the sample conditioning system to the analyzers).

The cylinder gases must be introduced three times for each range, for each analyzer. In other words, to audit one analyzer six data points must be recorded. The cylinder gases must be EPA protocol I gases.

The difference between the cylinder gas known value and the CEMS result is used to assess the accuracy of the CEMS.

The required audit gases are found in Appendix B of this document.

14.2.3. Relative Accuracy Audit (RAA)

The relative accuracy audit is similar to the Relative Accuracy Test Audit (RATA) except less data is recorded. The relative accuracy audit can be performed in three out of four quarters. It requires three sets of data in contrast to the RATA which requires nine sets of data. The relative difference between the mean of the reference method (RM) values and the mean of the CEMS values is used to assess the accuracy of the CEMS.

14.3. Excessive Inaccuracies

If the relative accuracy of the RATA exceeds twenty (20) percent then the CEMS is out-of-control. If the relative accuracy exceeds fifteen (15) percent of the CGA or the RAA then the CEMS is out-of-control. The CEMS remains out-of-control from the time that the system fails the RATA, CGA or RAA until the system passes the RATA, CGA or RAA. If the system fails a RATA then only a RATA is used to certify that the CEMS is no longer out-of-control.

The data during the out-of-control period is marked as invalid data.

14.4. Calculation for CEMS data accuracy

The RATA relative accuracy calculations are outlined in the performance specification section of 40CFR60 Appendix B.

The RAA relative accuracy calculations are calculated in the emissions standard units (for instance lbs/hr or lbs/MMBTU).

ED_002508A_00000338-00010

The CGA relative accuracy calculations are calculated in the units of the concentration appropriate for the analyzer (for instance O_2 in percent, and CO in ppm).

The equation used to compute relative accuracy for CGA or RAA is:

$$A = \frac{C\ meas - C\ audit}{C\ audit} * 100$$

A = accuracy in percent

C meas = Average CEMS response during the audit in units of applicable standard or appropriate concentration

C audit = Average audit value (CGA certified value or three run average for RAA) in units of applicable standard or appropriate concentration

14.5. Reporting Requirements

Samples of the required reports are found in Appendix C of this document.

Depending on the type of report, they can be produced on a daily or quarterly basis.

Certain reports such as the calibration summary report will prompt the user for a start and stop date. The report will determine if there is data present for the specified days and if so will compile the requested report period into the report.

Refer to Appendix C of this document for the list of reports.

ED_002508A_00000338-00011

APPENDIX A Project personnel

The following is a list of key project personnel and their corresponding responsibilities.

Overall Project Management	Manager of Environmental Control
Overall Quality Assurance	Manager of Environmental Control
Performance Auditing	Manager of Enviromental Control
Data Processing	Manager of Operations
Sampling Quality Control	Manager of Operations
Sampling Operations	Manager of Operatioins

In case of incomplete personnel list, be advised U. S. Steel Corp. is presently organizing the staffing and will furnish the names and duties prior to operation of the CEMS equipment.

Definitions of project responsibilities:

Overall Project Management - Responsible individual who assures the system donforms to all state and federal regulations and that all reports are submitted promplty.

Overall Quality Assurance - Manages the CEMS system. Responsible for ensuring all sampling operations, sampling quality control and data processing activities are performed.

Performance Auditing - Ensures the required quarterly audits are performed. Provides tracking of performance information.

Data Processing - Examines daily backup logs. Assures all daily reports are printed and distributed. Performs regular full backups.

Sampling Quality Control - Inspect daily calibration information. Assures all daily automatic checks were performed. Maintains spare parts inventory.

Sampling Operation - Performs daily maintenance.

APPENDIX B Specialty Gases Required

Daily Operation

• Oxygen zero gas	CO span gas, which contains 0% O2
• Oxygen span gas	22.0% Oxygen in Nitrogen base EPA Protocol 1
• NO_x Range one Zero Gas	0 ppm NOx, using Oxygen analyzer span gas
• NO_x Range one Span Gas	400-450 ppm EPA Protocol 1

Note:

The span and zero gases may be "Certified Masters" for normal operation but must be "EPA Protocol I" for all audits (i.e. CGA).

ED_002508A_00000338-00013

CGA audit gases

- Oxygen Range one mid range audit gas 5.0% Oxygen EPA Protocol 1
- Oxygen Range one hi range audit gas 10.0% Oxygen EPA Protocol 1
- NO_x Range one mid range audit gas 125 ppm NOx in Nitrogen base EPA Protocol 1
- NO_x Range one hi range audit gas 275 ppm NOx in Nitrogen base EPA Protocol 1

Note:

These specified span and audit gases are desired values. The supplier attempts to meet the desired concentrations as best as possible using industry standard gas mixing methods.

The actual concentration of the gases are determined by measurement of the bottle contents and may vary slightly, as long as the concentration is within 80 to 90 percent of full scale for the chosen operating range of the analyzers.

Each piece of equipment permits the span gas concentration value to be set to the actual bottle concentration.

When received, each bottle of protocol gas will be labeled with the exact concentration. This equipment setting must be set to the actual bottle contents when the bottles are changed.

APPENDIX C Sample Reports

Sample Analyzer Performance Report.

INSTRUMENT UP/DOWN REPORT
PRINTED: 02-Jun-91 11:50
Enertec Industrial, Inc.
811 West 5th St.
NOx-1 lbs/hr
BEGINNING Apr. 1, 1991 AND ENDING Jun. 2, 1991

Date	CEM Outage Began	CEM Outage Ended	Total CEM downtime	Reason for Downtime	Corrective Action Taken
04/01	00:01	00:07	0:07	Calibration	Scheduled cal.
05/29	10:52	13:29	2:38	Monitor Down.	Replace battery.
05/29	13:33	13:34	0:02	Monitor Down.	Clean hoses.
05/29	13:43	16:54	3:12	Monitor Down.	Hardware failure.
05/30	08:52	09:02	0:11	Monitor Down.	none at this time.
05/30	11:25	13:27	2:03	DAS Down.	Preventive Maintenance.
05/30	13:31	13:31	0:01	Monitor Down.	Call service.
05/30	14:10	14:10	0:01	Monitor Down.	none at this time.
06/01	12:05	12:08	0:04	Monitor Down.	Call service
06/01	12:10	12:10	0:01	Monitor Down.	none at this time.

Daily CO report

ACEMS Pollution Monitor Daily Report V4.1 01/12/1993 Page # 1
Company: ABC CORP. Location : Somewhere, USA
Source : Boiler Pollutant: CO Units: ppm

00:00	19.0	19.0	19.0	20.0	19.0	19.0	21.0	22.0	19.0	18.0		
00:10	19.0	20.0	20.0	20.0	20.0	22.0	20.0	20.0	26.0	44.0		
00:20	50.0	29.0	34.0	46.0	47.0	65.0	60.0	55.0	79.0	81.0		
00:30	85.0	88.0	64.0	46.0	25.0	22.0	22.0	21.0	21.0	22.0		
00:40	21.0	23.0	24.0	35.0	26.0	24.0	24.0	24.0	26.0	26.0		
00:50	28.0	27.0	25.0	28.0	26.0	24.0	31.0	56.0	29.0	25.0	Avg:	32.3 60
01:00	25.0	26.0	28.0	31.0	28.0	47.0	31.0	26.0	26.0	26.0		
01:10	25.0	25.0	26.0	25.0	27.0	27.0	27.0	26.0	27.0	38.0		
01:20	29.0	26.0	27.0	28.0	35.0	30.0	26.0	26.0	28.0	37.0		
01:30	34.0	28.0	28.0	27.0	26.0	26.0	30.0	28.0	25.0	27.0		
01:40	27.0	25.0	24.0	24.0	23.0	23.0	25.0	25.0	41.0	27.0		
01:50	25.0	27.0	28.0	25.0	25.0	25.0	30.0	34.0	28.0	25.0	Avg:	27.9 60
02:00	24.0	25.0	31.0	24.0	24.0	24.0	27.0	28.0	25.0	24.0		
02:10	25.0	30.0	31.0	31.0	27.0	24.0	27.0	31.0	33.0	29.0		
02:20	30.0	32.0	30.0	28.0	28.0	31.0	33.0	32.0	33.0	32.0		
02:30	32.0	31.0	31.0	32.0	34.0	36.0	34.0	34.0	39.0	35.0		
02:40	37.0	33.0	31.0	29.0	34.0	45.0	39.0	35.0	31.0	31.0		
02:50	36.0	40.0	39.0	42.0	51.0	41.0	40.0	44.0	44.0	41.0	Avg:	32.6 60
03:00	45.0	43.0	51.0	80.0	75.0	57.0	55.0	47.0	46.0	51.0		
03:10	53.0	56.0	52.0	48.0	52.0	52.0	56.0	57.0	56.0	60.0		
03:20	58.0	65.0	78.0	71.0	67.0	66.0	57.0	74.0	69.0	69.0		
03:30	63.0	60.0	53.0	62.0	56.0	52.0	65.0	53.0	84.0	157.0		
03:40	69.0	68.0	53.0	55.0	48.0	59.0	70.0	59.0	47.0	52.0		
03:50	51.0	46.0	52.0	49.0	49.0	49.0	51.0	60.0	81.0	82.0	Avg:	60.3 60
04:00	59.0	87.0	89.0	53.0	62.0	82.0	94.0	100.0	122.0	61.0		
04:10	42.0	39.0	40.0	41.0	39.0	47.0	41.0	38.0	36.0	40.0		
04:20	40.0	46.0	70.0	47.0	42.0	42.0	41.0	37.0	45.0	40.0		
04:30	37.0	37.0	41.0	37.0	34.0	34.0	34.0	35.0	34.0	34.0		
04:40	49.0	35.0	31.0	43.0	36.0	32.0	31.0	31.0	32.0	32.0		
04:50	35.0	31.0	47.0	36.0	36.0	39.0	62.0	28.0	26.0	28.0	Avg:	45.6 60
05:00	28.0IC	68.0IC	2.0IC	0.0ZC	171.0IC	188.0SC	101.0IC	2.0IC	0.0ZC	2607.0IC		
05:10	2829.0SC	2828.0SC	93.0IC	49.0IC	32.0	31.0	31.0	29.0	28.0	59.0		
05:20	94.0	37.0	34.0	27.0	26.0	26.0	35.0	30.0	26.0	25.0		
05:30	34.0	24.0	26.0	27.0	29.0	35.0	25.0	26.0	26.0	38.0		
05:40	65.0	76.0	73.0	56.0	48.0	53.0	53.0	51.0	51.0	52.0		
05:50	58.0	57.0	56.0	57.0	48.0	29.0	30.0	33.0	36.0	33.0	Avg:	40.5 46
06:00	31.0	34.0	35.0	36.0	38.0	38.0	36.0	44.0	174.0	43.0		
06:10	37.0	34.0	35.0	40.0	36.0	35.0	36.0	36.0	37.0	33.0		
06:20	36.0	39.0	40.0	38.0	37.0	39.0	41.0	45.0	39.0	41.0		
06:30	40.0	36.0	39.0	44.0	40.0	43.0	41.0	39.0	50.0	41.0		
06:40	40.0	39.0	38.0	51.0	54.0	40.0	46.0	48.0	47.0	44.0		
06:50	45.0	48.0	43.0	44.0	42.0	56.0	64.0	46.0	43.0	42.0	Avg:	43.3 60

ACEMS Pollution Monitor Daily Report V4.1 01/12/1993 Page # 2
Company: ABC CORP. Location : Somewhere, USA
Source : Boiler Pollutant: CO Units: ppm

07:00	48.0	50.0	44.0	46.0	50.0	45.0	57.0	49.0	48.0	49.0		
07:10	66.0	89.0	41.0	37.0	42.0	41.0	43.0	39.0	43.0	44.0		
07:20	38.0	40.0	40.0	36.0	37.0	41.0	63.0	46.0	117.0	42.0		
07:30	32.0	33.0	35.0	34.0	34.0	40.0	32.0	29.0	30.0	33.0		
07:40	37.0	26.0	29.0	32.0	29.0	28.0	30.0	29.0	29.0	28.0		
07:50	32.0	26.0	25.0	25.0	30.0	28.0	27.0	28.0	26.0	28.0	Avg:	39.3 60
08:00	33.0	27.0	28.0	25.0	24.0	25.0	27.0	28.0	31.0	48.0		
08:10	40.0	37.0	33.0	118.0	62.0	28.0	25.0	27.0	35.0	37.0		
08:20	27.0	26.0	28.0	23.0	24.0	29.0	27.0	23.0	24.0	29.0		
08:30	30.0	25.0	25.0	25.0	26.0	28.0	28.0	24.0	24.0	23.0		
08:40	24.0	22.0	20.0	21.0	32.0	37.0	24.0	22.0	20.0	20.0		
08:50	22.0	22.0	26.0	31.0	26.0	27.0	24.0	24.0	31.0	22.0	Avg:	29.4 60
09:00	22.0	25.0	29.0	37.0	23.0	23.0	25.0	22.0	23.0	27.0		
09:10	22.0	23.0	24.0	31.0	27.0	27.0	28.0	27.0	23.0	25.0		
09:20	25.0	26.0	31.0	29.0	24.0	25.0	29.0	27.0	25.0	24.0		
09:30	28.0	27.0	26.0	24.0	25.0	24.0	23.0	24.0	29.0	26.0		
09:40	24.0	23.0	25.0	24.0	26.0	21.0	18.0	25.0	33.0	27.0		
09:50	23.0	33.0	27.0	26.0	30.0	30.0	23.0	22.0	23.0	25.0	Avg:	25.7 60
10:00	24.0	33.0	34.0	24.0	26.0	27.0	27.0	24.0	23.0	23.0		
10:10	25.0	24.0	26.0	28.0	33.0	35.0	39.0	37.0	37.0	45.0		
10:20	61.0	39.0	36.0	29.0	25.0	27.0	29.0	34.0	25.0	25.0		
10:30	24.0	26.0	33.0	31.0	31.0	35.0	28.0	28.0	25.0	27.0		
10:40	28.0	30.0	33.0	39.0	52.0	28.0	33.0	33.0	30.0	35.0		
10:50	34.0	32.0	35.0	32.0	30.0	38.0	38.0	34.0	34.0	32.0	Avg:	31.5 60
11:00	40.0	39.0	47.0	29.0	35.0	36.0	32.0	34.0	33.0	37.0		
11:10	43.0	41.0	31.0	32.0	32.0	33.0	36.0	38.0	34.0	71.0		
11:20	58.0	36.0	43.0	40.0	37.0	36.0	37.0	36.0	42.0	36.0		
11:30	37.0	35.0	33.0	32.0	35.0	50.0	99.0	43.0	39.0	35.0		
11:40	36.0	38.0	36.0	38.0	45.0	38.0	40.0	40.0	44.0	45.0		
11:50	63.0	52.0	57.0	51.0	51.0	41.0	36.0	39.0	43.0	43.0	Avg:	41.1 60
12:00	38.0	37.0	38.0	39.0	48.0	47.0	41.0	43.0	45.0	42.0		
12:10	57.0	69.0	40.0	50.0	48.0	38.0	47.0	54.0	39.0	38.0		
12:20	41.0	38.0	38.0	39.0	32.0	32.0	31.0	43.0	40.0	35.0		
12:30	32.0	29.0	27.0	35.0	32.0	33.0	34.0	28.0	28.0	33.0		
12:40	28.0	25.0	31.0	27.0	31.0	27.0	27.0	29.0	27.0	25.0		
12:50	26.0	27.0	26.0	25.0	31.0	26.0	26.0	27.0	27.0	29.0	Avg:	35.4 60
13:00	30.0	29.0	46.0	30.0	28.0	29.0	28.0	39.0	31.0	30.0		
13:10	30.0	27.0	26.0	27.0	26.0	26.0	32.0	25.0	31.0	27.0		
13:20	26.0	27.0	28.0	38.0	29.0	30.0	31.0	26.0	25.0	32.0		
13:30	27.0	32.0	26.0	34.0	27.0	40.0	42.0	42.0	52.0	33.0		
13:40	27.0	32.0	28.0	29.0	40.0	44.0	44.0	49.0	51.0	48.0		
13:50	39.0	30.0	22.0	28.0	41.0	44.0	46.0	36.0	27.0	24.0	Avg:	32.9 60

ACEMS Pollution Monitor Daily Report V4.1 01/12/1993 Page # 3
Company: ABC CORP. Location : Somewhere, USA
Source : Boiler Pollutant: CO Units: ppm

14:00	26.0	34.0	35.0	33.0	22.0	21.0	21.0	23.0	25.0	23.0		
14:10	21.0	21.0	21.0	24.0	23.0	21.0	21.0	20.0	24.0	23.0		
14:20	23.0	22.0	22.0	21.0	21.0	21.0	20.0	23.0	21.0	37.0		
14:30	26.0	22.0	23.0	23.0	23.0	23.0	23.0	25.0	23.0	22.0		
14:40	25.0	25.0	26.0	28.0	27.0	27.0	26.0	26.0	31.0	30.0		
14:50	27.0	28.0	119.0	75.0	51.0	26.0	27.0	28.0	37.0	30.0	Avg:	27.8 60
15:00	30.0	30.0	29.0	30.0	34.0	36.0	41.0	39.0	33.0	36.0		
15:10	45.0	42.0	40.0	38.0	37.0	37.0	54.0	37.0	37.0	36.0		
15:20	37.0	39.0	45.0	64.0	34.0	35.0	38.0	39.0	54.0	44.0		
15:30	42.0	46.0	58.0	68.0	52.0	54.0	53.0	47.0	60.0	63.0		
15:40	52.0	48.0	48.0	43.0	45.0	49.0	45.0	41.0	35.0	38.0		
15:50	34.0	39.0	42.0	41.0	45.0	74.0	61.0	49.0	62.0	47.0	Avg:	44.2 60
16:00	57.0	47.0	47.0	54.0	45.0	60.0	56.0	51.0	47.0	39.0		
16:10	38.0	43.0	42.0	33.0	31.0	61.0	48.0	38.0	34.0	35.0		
16:20	31.0	31.0	27.0	58.0	42.0	31.0	30.0	30.0	27.0	34.0		
16:30	36.0	31.0	30.0	28.0	31.0	33.0	37.0	30.0	28.0	29.0		
16:40	28.0	28.0	31.0	30.0	29.0	28.0	29.0	30.0	24.0	23.0		
16:50	24.0	25.0	28.0	30.0	26.0	22.0	22.0	22.0	26.0	24.0	Avg:	34.8 60
17:00	23.0	23.0	24.0	25.0	23.0	31.0	32.0	31.0	30.0	27.0		
17:10	25.0	23.0	22.0	22.0	22.0	22.0	39.0	51.0	40.0	40.0		
17:20	28.0	22.0	35.0	41.0	45.0	33.0	42.0	46.0	48.0	39.0		
17:30	28.0	27.0	27.0	33.0	26.0	22.0	22.0	21.0	21.0	22.0		
17:40	22.0	22.0	22.0	26.0	29.0	28.0	24.0	23.0	31.0	29.0		
17:50	30.0	30.0	27.0	27.0	27.0	28.0	27.0	29.0	29.0	30.0	Avg:	29.0 60
18:00	33.0	33.0	32.0	30.0	34.0	34.0	38.0	39.0	35.0	30.0		
18:10	30.0	38.0	36.0	32.0	47.0	35.0	34.0	36.0	32.0	31.0		
18:20	32.0	32.0	35.0	53.0	35.0	35.0	35.0	34.0	36.0	35.0		
18:30	37.0	45.0	43.0	42.0	40.0	40.0	35.0	39.0	41.0	38.0		
18:40	37.0	39.0	56.0	46.0	45.0	37.0	35.0	39.0	37.0	46.0		
18:50	37.0	34.0	32.0	45.0	38.0	38.0	44.0	33.0	115.0	43.0	Avg:	38.8 60
19:00	34.0	34.0	33.0	35.0	36.0	35.0	39.0	47.0	53.0	36.0		
19:10	31.0	32.0	34.0	36.0	38.0	39.0	43.0	35.0	35.0	38.0		
19:20	41.0	44.0	42.0	44.0	48.0	41.0	53.0	48.0	37.0	34.0		
19:30	43.0	41.0	56.0	45.0	46.0	39.0	37.0	37.0	37.0	77.0		
19:40	43.0	32.0	29.0	32.0	40.0	43.0	33.0	38.0	41.0	32.0		
19:50	34.0	36.0	32.0	35.0	32.0	30.0	32.0	32.0	36.0	34.0	Avg:	38.8 60
20:00	30.0	31.0	31.0	33.0	31.0	33.0	29.0	29.0	32.0	30.0		
20:10	28.0	28.0	29.0	43.0	27.0	33.0	26.0	25.0	23.0	23.0		
20:20	25.0	25.0	25.0	26.0	36.0	28.0	23.0	23.0	25.0	25.0		
20:30	27.0	32.0	25.0	24.0	25.0	24.0	23.0	33.0	25.0	25.0		
20:40	23.0	23.0	24.0	27.0	24.0	23.0	23.0	22.0	23.0	23.0		
20:50	22.0	22.0	22.0	23.0	26.0	67.0	37.0	30.0	23.0	26.0	Avg:	27.5 60

ACEMS Pollution Monitor Daily Report V4.1 01/12/1993 Page # 4
Company: ABC CORP. Location : Somewhere, USA
Source : Boiler Pollutant: CO Units: ppm

21:00	28.0	24.0	21.0	23.0	25.0	24.0	28.0	40.0	26.0	23.0		
21:10	24.0	23.0	23.0	25.0	23.0	22.0	34.0	23.0	23.0	21.0		
21:20	21.0	22.0	40.0	49.0	44.0	55.0	57.0	43.0	25.0	26.0		
21:30	39.0	48.0	48.0	35.0	22.0	25.0	37.0	40.0	43.0	46.0		
21:40	25.0	20.0	21.0	25.0	23.0	24.0	28.0	37.0	36.0	39.0		
21:50	35.0	45.0	60.0	31.0	29.0	31.0	26.0	23.0	23.0	23.0	Avg:	31.0 60
22:00	22.0	23.0	22.0	22.0	24.0	24.0	24.0	24.0	31.0	57.0		
22:10	29.0	22.0	29.0	24.0	30.0	23.0	24.0	25.0	28.0	24.0		
22:20	24.0	25.0	26.0	33.0	24.0	24.0	27.0	24.0	26.0	24.0		
22:30	24.0	52.0	37.0	23.0	23.0	23.0	25.0	28.0	29.0	24.0		
22:40	23.0	26.0	30.0	35.0	30.0	26.0	24.0	24.0	27.0	31.0		
22:50	27.0	24.0	40.0	31.0	25.0	27.0	26.0	24.0	26.0	27.0	Avg:	27.1 60
23:00	28.0	25.0	25.0	22.0	30.0	32.0	33.0	29.0	23.0	24.0		
23:10	29.0	31.0	34.0	30.0	37.0	28.0	34.0	32.0	28.0	35.0		
23:20	31.0	28.0	26.0	25.0	29.0	37.0	38.0	45.0	31.0	25.0		
23:30	32.0	51.0	46.0	34.0	38.0	36.0	37.0	40.0	35.0	29.0		
23:40	34.0	40.0	43.0	41.0	31.0	35.0	36.0	31.0	30.0	37.0		
23:50	34.0	37.0	38.0	39.0	49.0	55.0	46.0	43.0	50.0	45.0	Avg:	34.6 60

Daily Average: 35.4 Count: 1426

Calibration Codes	Status Codes
IC - In calibration	CD - CEMSPEAK data error
SC - Span Calibration PASS	CT - CEMSPEAK task error
MC - Midrange Calibration PASS	DE - Data error
ZC - Zero Calibration PASS	HW - Hardware fault
CF - Calibration Fail	IG - Ignore Data
SF - Span Calibration Fail	LF - Communication Link Failure
MF - Midrange Calibration Fail	ND - No Data
ZF - Zero Calibration Fail	OD - Old Data
	DN - Process Down

End of Daily Report.

Daily O2 report

ACEMS Pollution Monitor Daily Report V4.1 01/12/1993 Page # 1
Company: Some company Location : Yourtown, Yourstate
Source : Boiler Pollutant: O2 Units: %

00:00	8.5	8.4	8.6	8.7	8.8	8.8	8.5	8.0	8.4	8.7		
00:10	8.8	8.8	8.9	8.8	8.8	8.4	8.5	8.6	9.2	9.7		
00:20	9.6	8.8	9.3	9.8	10.0	8.6	8.1	9.6	10.4	10.6		
00:30	10.7	10.6	10.1	9.3	8.4	8.5	8.5	8.4	8.5	8.5		
00:40	8.5	8.6	8.4	7.2	7.9	8.3	8.3	8.2	8.1	8.0		
00:50	8.0	8.0	8.0	7.9	7.7	8.0	7.6	5.3	7.4	8.1	Avg:	8.6
60												
01:00	8.3	8.5	8.3	8.2	8.3	6.6	7.4	8.1	8.1	8.3		
01:10	8.2	8.3	8.3	8.2	8.2	8.0	8.0	8.1	8.0	7.4		
01:20	8.1	8.4	8.3	8.2	7.3	8.3	8.4	8.2	8.1	7.7		
01:30	7.8	8.2	8.0	8.0	8.2	8.2	8.0	8.2	8.3	8.2		
01:40	8.0	8.1	8.1	8.0	8.1	8.2	7.9	8.0	7.1	7.9		
01:50	8.1	8.0	8.0	8.1	8.1	8.1	7.9	7.4	8.0	8.2	Avg:	8.0
60												
02:00	8.1	8.1	7.7	8.0	8.0	8.0	7.9	7.8	8.1	8.0		
02:10	8.0	8.0	8.1	8.0	8.0	8.4	8.3	8.2	7.8	8.2		
02:20	8.0	7.8	8.3	8.3	8.2	8.4	8.2	8.1	8.2	8.1		
02:30	8.2	8.0	8.0	8.1	7.9	8.0	8.1	8.1	8.0	8.0		
02:40	7.8	8.0	8.0	8.0	8.0	7.5	7.8	7.7	7.7	7.7		
02:50	7.6	7.7	7.8	7.7	7.4	7.7	7.7	7.7	7.6	7.6	Avg:	8.0
60												
03:00	7.8	7.7	7.5	6.9	7.1	7.9	7.8	8.1	8.2	8.3		
03:10	8.3	8.2	8.0	7.9	7.9	8.0	7.9	7.9	7.9	7.7		
03:20	7.8	7.9	7.6	7.8	7.7	7.8	7.8	7.6	7.6	7.5		
03:30	7.5	7.7	7.8	7.8	7.7	7.7	7.7	7.5	7.5	5.7		
03:40	6.8	6.7	7.9	7.8	8.1	8.0	7.8	7.7	7.9	7.9		
03:50	7.6	7.9	7.5	7.8	8.0	7.7	7.6	8.1	8.5	8.5	Avg:	7.7
60												
04:00	8.1	8.7	8.7	8.3	9.0	9.3	9.2	9.5	9.9	8.3		
04:10	8.9	8.0	8.1	8.0	8.1	7.5	8.1	8.2	8.2	8.1		
04:20	8.0	8.0	6.5	7.1	8.0	8.0	8.1	8.2	7.6	7.9		
04:30	8.1	8.2	8.0	7.9	7.9	7.9	8.0	7.9	7.9	7.9		
04:40	7.0	7.9	8.4	7.7	7.9	8.6	8.7	8.5	8.4	8.3		
04:50	8.3	8.3	7.3	7.4	7.7	7.2	6.0	8.4	8.8	8.8	Avg:	8.1
60												
05:00	8.6IC	15.4IC	21.1IC	19.7IC	1.5IC	0.0ZC	0.0ZC	31.0IC	31.1SC	1.2IC		
05:10	5.0IC	3.1IC	7.2IC	7.3IC	9.0	7.9	7.9	7.7	7.8	6.2		
05:20	4.8	6.9	7.0	8.0	8.5	8.5	7.9	7.9	8.7	8.6		
05:30	8.5	8.4	8.2	8.3	8.1	7.4	8.2	8.2	8.2	9.4		
05:40	10.3	10.3	9.6	9.4	9.8	9.8	9.9	9.9	9.8	9.8		
05:50	9.4	9.9	9.9	9.9	9.5	8.3	8.3	8.3	8.2	8.2	Avg:	8.6
46												
06:00	8.3	8.3	8.2	8.4	8.3	8.2	8.3	8.1	4.9	6.4		
06:10	7.3	7.8	8.3	8.1	8.8	9.0	8.8	8.6	8.6	8.6		
06:20	8.6	8.3	8.1	8.4	8.3	8.2	8.3	7.6	7.8	8.2		
06:30	8.2	8.1	7.9	7.6	8.0	8.1	7.6	7.5	7.3	8.0		
06:40	8.1	8.0	7.9	7.7	7.3	8.0	7.7	7.6	7.9	8.0		
06:50	7.9	7.4	8.0	7.9	7.9	7.8	7.5	7.8	7.9	7.7	Avg:	8.0
60												

ACEMS Pollution Monitor Daily Report V4.1 01/12/1993 Page # 2
Company: Some company Location : Yourtown, Yourstate
Source : Boiler Pollutant: O2 Units: %

07:00	7.8	7.6	7.9	7.9	7.7	7.7	7.4	7.6	7.7	7.6		
07:10	7.2	5.6	7.5	8.0	7.6	7.9	8.0	8.0	7.9	7.9		
07:20	8.1	8.0	8.1	7.9	8.0	7.9	6.4	7.6	8.7	7.3		
07:30	8.3	8.5	8.5	8.3	8.3	7.7	8.0	8.1	8.0	7.6		
07:40	7.6	8.0	7.9	7.5	7.6	7.6	7.5	7.5	7.6	7.7		
07:50	7.2	7.5	7.6	7.6	7.2	7.6	7.6	7.4	7.6	7.5	Avg:	7.7
60												
08:00	7.1	7.3	7.2	7.6	7.6	7.6	7.5	7.5	7.4	6.2		
08:10	6.7	6.6	6.9	5.6	6.4	8.1	8.1	7.9	7.3	7.0		
08:20	7.9	7.8	7.6	7.8	7.7	7.3	7.4	7.7	7.6	7.1		
08:30	7.3	7.6	7.7	7.8	7.5	7.5	7.5	7.6	7.7	7.8		
08:40	7.8	7.8	7.8	7.8	7.4	6.4	7.9	8.2	8.1	7.4		
08:50	7.8	8.1	7.8	7.0	7.6	7.6	8.0	7.9	7.1	7.9	Avg:	7.5
60												
09:00	7.8	7.4	7.1	6.7	7.7	7.9	7.9	7.9	7.8	7.4		
09:10	7.7	7.8	7.7	7.2	7.6	7.8	7.7	7.4	7.8	7.8		
09:20	7.8	7.7	7.2	7.7	7.7	7.7	7.1	7.7	7.6	7.8		
09:30	7.8	8.0	7.8	7.8	7.8	7.9	7.9	7.8	7.5	7.8		
09:40	8.0	8.1	7.9	7.8	7.5	7.7	7.5	7.5	6.8	7.5		
09:50	8.0	7.5	7.6	8.0	7.7	7.7	8.0	8.1	8.1	8.1	Avg:	7.7
60												
10:00	8.1	7.4	6.9	8.0	8.0	7.7	7.5	7.8	7.8	7.7		
10:10	7.7	7.6	7.6	7.4	7.3	7.3	7.4	7.3	7.2	7.0		
10:20	6.0	7.3	7.5	7.7	7.7	7.7	7.7	6.9	7.9	7.8		
10:30	7.8	7.9	7.7	7.7	7.6	6.9	7.4	7.7	7.7	7.8		
10:40	7.8	7.7	7.6	7.3	6.0	7.6	7.4	7.9	7.8	7.7		
10:50	8.1	8.1	7.9	8.1	8.1	8.0	8.0	7.9	7.8	7.7	Avg:	7.6
60												
11:00	7.4	7.6	6.6	7.7	8.0	8.2	8.1	7.9	8.0	7.5		
11:10	6.7	7.7	7.9	8.1	7.9	7.9	7.7	7.4	7.7	7.0		
11:20	6.2	7.6	7.4	8.0	8.3	8.2	8.2	8.1	8.0	8.1		
11:30	8.0	8.0	8.0	7.9	7.8	7.1	5.4	7.8	8.3	8.0		
11:40	8.0	7.7	8.1	8.0	7.8	7.7	7.3	7.4	7.6	7.5		
11:50	6.9	7.6	7.3	7.7	7.4	7.5	7.6	7.6	7.5	7.7	Avg:	7.7
60												
12:00	7.5	7.7	7.7	7.8	7.8	7.8	7.8	7.8	7.7	7.7		
12:10	7.4	6.7	7.8	7.6	7.6	7.9	7.6	6.4	7.6	7.7		
12:20	7.2	7.4	7.6	7.6	7.5	7.4	7.5	7.0	7.1	7.7		
12:30	7.6	7.8	7.9	7.4	7.5	7.8	7.7	7.9	7.9	7.4		
12:40	7.8	8.0	7.6	8.1	7.7	8.0	8.1	7.6	7.9	8.0		
12:50	8.0	7.9	7.9	7.9	7.4	7.9	8.0	8.0	7.9	8.0	Avg:	7.7
60												
13:00	8.0	8.0	6.7	7.9	8.3	8.2	8.1	7.4	7.9	8.1		
13:10	8.1	8.1	8.1	8.0	8.1	8.0	7.4	7.9	7.2	7.5		
13:20	7.9	7.6	7.9	6.7	7.9	7.9	7.6	7.9	7.9	7.0		
13:30	7.8	7.5	8.0	7.5	7.8	8.1	8.9	9.7	9.0	8.1		
13:40	8.3	7.9	8.5	8.7	9.4	9.5	9.5	9.4	8.9	9.5		
13:50	8.9	8.7	7.9	9.1	9.5	9.5	8.6	8.9	8.2	8.1	Avg:	8.2
60												

ACEMS Pollution Monitor Daily Report V4.1 01/12/1993 Page # 3
Company: Some company Location : Yourtown, Yourstate
Source : Boiler Pollutant: O2 Units: %

14:00	8.1	7.9	8.7	8.8	8.4	8.4	8.5	8.4	8.3	8.1		
14:10	8.4	8.4	8.5	8.3	8.2	8.3	8.4	8.4	8.0	7.9		
14:20	8.0	7.9	7.8	7.9	7.7	7.8	7.7	7.6	7.9	6.9		
14:30	7.5	8.2	8.1	8.2	8.1	8.0	7.9	7.7	7.9	7.9		
14:40	7.8	7.7	7.5	7.5	7.6	7.5	7.4	7.5	7.4	7.6		
14:50	7.5	7.4	6.0	5.5	5.9	7.8	7.8	7.9	7.4	7.8	Avg:	7.8
60												
15:00	8.0	7.9	7.9	7.8	7.7	7.6	7.2	7.2	7.5	7.3		
15:10	6.9	7.4	7.3	7.3	7.3	7.1	6.4	7.1	7.3	7.3		
15:20	7.2	7.2	7.1	6.5	6.9	7.2	7.1	7.1	6.9	7.1		
15:30	7.3	7.2	7.0	7.0	7.0	6.9	6.7	7.0	7.0	7.0		
15:40	7.1	6.9	6.9	7.2	7.1	7.0	7.0	7.1	7.1	7.0		
15:50	6.9	6.9	7.0	7.1	7.1	6.3	6.8	7.1	6.5	6.8	Avg:	7.1
60												
16:00	7.1	7.1	7.0	7.2	7.2	6.9	6.9	7.0	7.1	7.1		
16:10	7.1	7.1	7.1	7.2	7.2	6.3	6.2	7.3	7.4	7.4		
16:20	7.3	7.4	7.4	6.5	7.0	7.6	7.6	7.6	7.5	7.5		
16:30	7.4	7.5	7.5	7.5	7.4	7.4	7.4	7.6	7.6	7.5		
16:40	7.5	7.5	7.3	7.6	7.6	7.6	7.5	7.6	7.6	7.6		
16:50	7.5	7.5	7.7	7.8	7.9	7.9	7.9	7.9	7.9	7.9	Avg:	7.4
60												
17:00	7.9	7.7	7.7	7.7	7.7	7.5	7.5	7.6	7.7	8.0		
17:10	8.2	8.4	8.6	8.7	8.6	8.6	9.4	9.1	9.7	9.8		
17:20	8.9	8.6	9.3	9.9	9.8	8.3	8.5	8.8	9.4	9.4		
17:30	8.5	8.4	8.5	7.9	8.1	8.4	8.7	8.7	8.7	8.5		
17:40	8.6	8.5	8.4	8.3	7.8	7.6	8.3	8.5	8.1	8.1		
17:50	8.2	8.3	8.3	8.1	8.0	8.1	8.1	8.0	8.0	7.8	Avg:	8.4
60												
18:00	7.7	7.8	7.5	7.8	7.5	7.4	7.2	7.4	7.2	8.0		
18:10	8.0	7.5	7.9	8.1	7.0	7.6	8.1	7.8	7.9	8.0		
18:20	7.9	8.0	8.0	6.1	7.7	8.0	8.3	8.4	8.4	8.3		
18:30	8.2	8.0	8.2	8.0	8.0	7.8	8.1	8.1	8.0	7.9		
18:40	7.8	7.9	7.2	7.7	7.7	7.9	7.8	7.8	7.4	7.2		
18:50	7.9	7.9	8.1	7.5	8.1	8.3	7.9	8.2	6.4	7.4	Avg:	7.8
60												
19:00	8.4	8.8	8.8	8.2	8.6	8.6	8.2	7.5	7.2	7.8		
19:10	8.5	8.6	8.5	8.4	8.2	8.2	7.7	8.3	8.2	8.1		
19:20	8.0	7.9	7.9	7.7	7.6	7.7	7.0	7.6	7.8	7.6		
19:30	7.1	7.6	7.2	7.4	7.2	8.1	8.1	8.2	8.0	6.4		
19:40	7.8	8.2	8.2	8.1	8.1	7.5	8.1	7.9	7.4	8.0		
19:50	8.0	8.0	8.0	7.5	8.0	8.0	8.0	7.9	7.5	7.4	Avg:	7.9
60												
20:00	8.0	7.9	7.9	8.0	8.0	7.7	7.8	8.0	8.2	8.2		
20:10	8.2	8.1	8.0	6.7	7.7	6.9	7.7	8.1	8.3	8.3		
20:20	8.3	8.3	8.2	8.0	7.3	7.6	8.3	8.3	8.1	8.0		
20:30	7.8	7.2	7.8	8.0	7.9	7.9	7.8	7.0	7.8	8.0		
20:40	8.0	7.9	8.0	7.8	7.8	7.9	8.1	7.9	7.8	7.9		
20:50	7.9	7.9	7.8	7.8	7.6	5.7	6.6	6.9	7.4	7.4	Avg:	7.8
60												

ACEMS Pollution Monitor Daily Report V4.1 01/12/1993 Page # 4
Company: Some company Location : Yourtown, Yourstate
Source : Boiler Pollutant: O2 Units: %

21:00	7.0	7.8	8.6	8.5	8.2	8.1	7.7	6.5	7.9	7.9		
21:10	7.9	7.9	7.9	8.0	8.0	7.9	7.8	7.7	7.7	7.9		
21:20	7.8	7.8	7.1	5.8	8.0	9.0	9.3	9.1	7.8	8.0		
21:30	9.1	9.2	9.4	8.8	7.6	8.0	9.1	9.3	9.3	9.3		
21:40	7.8	7.4	7.2	7.1	7.2	6.9	6.9	7.0	6.6	6.5		
21:50	6.9	6.7	6.3	7.7	7.8	7.3	8.1	8.1	7.9	7.9	Avg:	7.8
22:00	7.9	7.8	7.6	7.6	7.5	7.5	7.6	7.4	7.0	5.7		
22:10	6.8	7.5	7.1	7.6	7.0	7.7	7.7	7.6	7.1	7.5		
22:20	7.6	7.5	7.4	7.0	7.4	7.3	7.2	7.3	7.2	7.1		
22:30	7.2	5.9	6.6	7.5	7.5	7.4	7.2	7.0	7.5	7.5		
22:40	7.5	7.5	7.4	7.0	7.4	7.4	7.5	7.5	7.5	7.5		
22:50	7.5	7.5	6.4	6.8	7.5	7.6	7.5	7.6	7.6	7.5	Avg:	7.3
23:00	7.4	7.5	7.5	7.4	6.9	7.4	7.5	7.4	7.6	7.5		
23:10	7.4	7.4	7.3	7.2	6.7	7.3	7.2	7.3	7.4	7.3		
23:20	7.4	7.5	7.6	7.6	7.5	7.5	7.3	6.6	7.3	7.6		
23:30	7.5	6.8	6.2	7.3	7.1	7.2	7.5	7.6	7.3	7.5		
23:40	7.4	7.2	7.0	7.4	7.4	7.3	7.3	7.4	7.3	7.1		
23:50	7.2	7.5	7.5	7.4	7.2	7.2	7.2	7.2	7.3	7.4	Avg:	7.3

Daily Average: 7.8 Count: 1426

Calibration Codes	Status Codes
IC - In calibration	CD - CEMSPEAK data error
SC - Span Calibration PASS	CT - CEMSPEAK task error
MC - Midrange Calibration PASS	DE - Data error
ZC - Zero Calibration PASS	HW - Hardware fault
CF - Calibration Fail	IG - Ignore Data
SF - Span Calibration Fail	LF - Communication Link Failure
MF - Midrange Calibration Fail	ND - No Data
ZF - Zero Calibration Fail	OD - Old Data
	DN - Process Down

End of report.

Daily Stack Calibration Summary

COMPANY: Your Company
PLANT:
STACK: Turbine 1 on Node turbine_1

PERIOD START: August 22, 1993
PERIOD END: September 03, 1993
Created: 09/03/93 Page 1

Ranges of Analyzers:

CO: 0.0 - 50.0 ppm
O2: 0.0 - 25.0 %
NOX_INLET: 0.0 - 200.0 ppm
NOX_OUT: 0.0 - 50.0 ppm
NH3: 0.0 - 50.0 ppm
COLO: 0.0 - 20.0 ppm

Date	Time	ANALYZER	TYPE	EXPECTED	ACTUAL	ABS	% RANGE	ALLOWANCE Units	%	
09/03/93	05:29	NH3	SPAN	38.7	39.8	1.1	2.20%	2.5	5.0%	P
09/03/93	05:29	NH3	ZERO	0.0	0.0	0.0	0.00%	2.5	5.0%	P
09/03/93	05:29	NOX_OUT	SPAN	38.7	41.4	2.7	5.40%	2.5	5.0%	F
09/03/93	05:29	NOX_OUT	ZERO	0.0	-0.1	0.1	0.20%	2.5	5.0%	P
09/03/93	05:29	NOX_INLE	SPAN	182.0	177.0	5.0	2.50%	10.0	5.0%	P
09/03/93	05:29	NOX_INLE	ZERO	0.0	0.0	0.0	0.00%	10.0	5.0%	P
09/03/93	05:29	O2	SPAN	22.0	22.0	0.0	0.04%	0.5	2.0%	P
/03/93	05:29	O2	ZERO	0.0	-0.1	0.1	0.24%	0.5	2.0%	P
09/03/93	05:29	COLO	SPAN	39.8	37.7	2.1	4.20%	2.5	5.0%	P
09/03/93	05:29	COLO	ZERO	0.0	-0.8	0.8	1.60%	2.5	5.0%	P
09/02/93	09:15	NH3	SPAN	38.7	39.0	0.3	0.60%	2.5	5.0%	P
09/02/93	09:15	NH3	ZERO	0.0	0.0	0.0	0.00%	2.5	5.0%	P
09/02/93	09:15	NOX_OUT	SPAN	38.7	38.7	0.0	0.00%	2.5	5.0%	P
09/02/93	09:15	NOX_OUT	ZERO	0.0	0.0	0.0	0.00%	2.5	5.0%	P
09/02/93	09:15	NOX_INLE	SPAN	182.0	181.2	0.8	0.40%	10.0	5.0%	P
09/02/93	09:15	NOX_INLE	ZERO	0.0	0.0	0.0	0.00%	10.0	5.0%	P
09/02/93	09:15	O2	SPAN	22.0	22.4	0.4	1.48%	0.5	2.0%	P
09/02/93	09:15	O2	ZERO	0.0	0.1	0.1	0.52%	0.5	2.0%	P
09/02/93	09:15	COLO	SPAN	39.8	38.0	1.8	3.60%	2.5	5.0%	P
09/02/93	09:15	COLO	ZERO	0.0	-0.7	0.7	1.40%	2.5	5.0%	P

	CO	O2	NOX_INLET	NOX_OUT	NH3	COLO
P - Pass	< 5.0%	< 2.0%	< 5.0%	< 5.0%	< 5.0%	< 5.0%
F - Fail	> 5.0%	> 2.0%	> 5.0%	> 5.0%	> 5.0%	> 5.0%

ED_002508A_00000338-00025

Sample Source Operation Report.

Page # 1

Source Operation Report
Quarter: 2 Year: 1991
Enerter Industrial, Inc.
811 West 5th St.
Source: CUB 101
CEMS id no.: _____

Operation Outage Began	Operation Outage Ended	Source Downtime dd/hh:mm	Reasons for Downtime	Corrective Action
04/01 00:00	05/23 10:06	52/09:07	Process down	system off line.
05/23 10:18	05/23 10:19	00:05	Data Acquisition down	None at this time.
05/23 10:35	05/23 10:35	00:01	Process down	None at this time.
05/23 10:43	05/23 10:44	00:02	Process down	None at this time.
05/23 10:59	05/23 13:59	03:01	Routine Maintenance	Scheduled maintenance.
05/23 14:04	05/28 09:16	4/19:13	Routine Maintenance	Scheduled maintenance.
05/28 10:12	05/28 10:12	00:01	Data Acquisition down	None at this time.
05/28 10:50	05/28 10:57	00:08	Data Acquisition down	None at this time.
05/28 10:59	05/28 11:03	00:05	Process down	None at this time.
05/29 10:52	05/29 13:29	02:38	Process down	Preventive maintenance.
05/29 13:33	05/29 13:34	00:02	Data Acquisition down	None at this time.
05/29 13:43	05/29 16:54	03:12	Preventive Maintenance	Scheduled maintenance.
05/30 08:52	05/30 09:02	00:11	Process down	None at this time.
05/30 11:25	05/30 13:27	02:03	Process down	None at this time.
05/30 13:31	05/30 13:31	00:01	Routine Maintenance	Scheduled maintenance.
05/30 14:09	05/30 14:10	00:02	Data Acquisition down	None at this time.
06/01 12:05	06/01 12:10	00:06	Process down	None at this time.
06/02 09:37	06/02 09:56	00:20	Process down	None at this time.
06/02 10:09	06/02 10:11	00:03	Data Acquisition down	None at this time.
06/02 11:37	06/02 11:44	00:08	Routine Maintenance	Scheduled maintenance.
06/02 12:22	06/02 13:22	00:01	Process down	None at this time.

ED_002508A_00000338-00026

Source Operation Report
Quarter: 2 Year: 1991
Enertec Industrial, Inc.
811 West 5th St.
Source: CUB 101
CEMS id no.: _____

Outage Summary

Total Times	DAYS/HRS:MINS
Process Up Time	4/18:53
Process Down Time	00:00
Data Acquisition Down Time	57/16:30
Total Time in Quarter	62/11:23

Time percentages		
Per cent process up time	7.7%	Process Uptime / Time in Quarter
Per cent process down time	0.0%	Process Downtime / Time in Quarter
Per cent DA down time	92.3%	DA Downtime / Time in Quarter
Total time	100.0%	

Process availability 7.7% Process Uptime / (Process Uptime + DA Downtime)

Calculate maximum additional DA downtime permitted for rest of quarter

Availability base =	
cess uptime + DA downtime + time remaining in quarter	90/23:00
. 90 % availability * availability base	81/20:42
Max DA downtime permitted for quarter	9/02:18
Less time that DA already down for quarter	57/16:30
Max DA downtime permitted in remainder of quarter	00:00

Sample of a PA Excess Emissions Report.

STANDARD EMISSIONS REPORT PAGE 1
COMPANY NAME: U. S. Steel Corp.
LOCATION: Clairton, PA.
SOURCE: Boiler
CEMS ID NO. (+SOURCE ID+ANALYZER ID): 0068910
PARAMETER: NOx#MBTU
QUARTER: 4
YEAR: 92
UNITS: lbs

HOUR	1	2	3	4	5	6	7	8
	9	10	11	12	13	14	15	16
	17	18	19	20	21	22	23	24
	XXXX.PC	XXXX.PC	XXXX.PC	XXXX.PC	XXXX.PC	XXXX.PC	XXXX.PC	XXXX.PC
DAY								
01	0006.08	0006.08	0007.08	0007.08	0007.08	0006.08	0006.08	0007.08
	0007.08	0005.08	0005.08	0005.08	0005.08	0005.08	0005.08	0006.08
	0005.08	0005.08	0006.08	0006.08	0006.08	0005.08	0005.08	0006.08
02	0005.08	0005.08	0005.08	0005.08	0005.08	0005.08	0005.08	0006.08
	0007.08	0005.08	0005.08	0008.08	0005.08	0005.08	0006.08	0006.08
	0005.08	0005.08	0005.08	0005.08	0005.08	0005.08	0005.08	0005.08
03	0004.08	0004.08	0004.08	0004.08	0004.08	0004.08	0004.08	0006.08
	0005.08	0004.08	0004.08	0004.08	0004.08	0004.08	0004.08	0005.08
	0004.08	0004.08	0004.08	0004.08	0004.08	0004.08	0004.08	0004.08
04	0004.08	0004.08	0004.08	0003.08	0003.08	0003.08	0003.08	0005.08
	0005.08	0003.08	0003.08	0003.08	0003.08	0003.08	0004.08	0004.08
	0003.08	0003.08	0003.08	0003.08	0003.08	0002.08	0002.08	0002.08
05	0001.08	0002.08	0002.08	0002.08	0001.08	0001.08	0001.08	0003.08
	0003.08	0001.08	0001.08	0001.08	0002.08	0002.08	0002.08	0003.08
	0002.08	0002.08	0002.08	0002.08	0002.08	0002.08	0002.08	0002.08
06	0001.08	0001.08	0001.08	0001.08	0001.08	0001.08	0001.08	0003.08
	0002.08	0000.08	0000.08	0001.08	0001.08	II21.08	0007.08	0006.08
	0006.08	0007.08	0007.08	0007.08	0007.08	0007.08	0007.08	0007.08
07	0007.08	0007.08	0007.08	0007.08	0007.08	0007.08	0007.08	0007.08
	II21.08	II21.08	0010.08	0008.08	0007.08	0007.08	0007.08	0007.08
	0008.08	0007.08	0008.08	0007.08	0007.08	0007.08	0007.08	0007.08
08	0007.08	0008.08	0008.08	0007.08	0007.08	0008.08	0008.08	0008.08
	II18.08	II18.08	0008.08	II21.08	II21.08	II21.08	0010.08	0011.08
	0010.08	0010.08	0010.08	0011.08	0010.08	0010.08	0010.08	0010.08
09	0009.08	0010.08	0011.08	0012.08	0012.08	0014.08	0016.08	0016.08
	0015.08	0013.08	0012.08	0011.08	II21.08	0011.08	0011.08	0011.08
	0010.08	0010.08	0010.08	0010.08	0010.08	0010.08	0010.08	0011.08
10	0011.08	0010.08	0011.08	0011.08	0010.08	0010.08	0011.08	0011.08
	0014.08	0012.08	0011.08	0011.08	0011.08	0011.08	0011.08	0011.08
	0011.08	0010.08	0011.08	0011.08	0011.08	0011.08	0011.08	0012.08
11	0011.08	0011.08	0010.08	0010.08	0010.08	0010.08	0010.08	0010.08

STANDARD EMISSIONS REPORT PAGE 2
CEMS ID NO. (+SOURCE ID+ANALYZER ID): 0068910
QUARTER: 4
YEAR: 92

HOUR	1	2	3	4	5	6	7	8
	9	10	11	12	13	14	15	16
	17	18	19	20	21	22	23	24
	XXXX.PC	XXXX.PC	XXXX.PC	XXXX.PC	XXXX.PC	XXXX.PC	XXXX.PC	XXXX.PC
DAY								
	0012.08	0010.08	0010.08	0012.08	0011.08	0009.08	0009.08	0010.08
	0010.08	0010.08	0011.08	0011.08	0011.08	0012.08	0012.08	0013.08
12	0012.08	0012.08	0012.08	0012.08	0011.08	0010.08	0011.08	0012.08
	0012.08	0011.08	0011.08	0013.08	0010.08	0010.08	0010.08	0011.08
	0010.08	0010.08	0010.08	0010.08	0010.08	0010.08	0010.08	0010.08
13	0010.08	0009.08	0009.08	0010.08	0009.08	0009.08	0009.08	0010.08
	0011.08	0010.08	0010.08	II21.08	0010.08	0010.08	0010.08	0011.08
	0010.08	0010.08	0010.08	0011.08	0011.08	0011.08	0011.08	0011.08
14	0011.08	0010.08	0010.08	0011.08	0011.08	0011.08	0011.08	0011.08
	II21.08	II21.08	0010.08	0010.08	0010.08	0010.08	0010.08	0010.08
	0010.08	0010.08	0011.08	0013.08	0013.08	0013.08	0012.08	0013.08
15	0012.08	0013.08	0013.08	0011.08	0011.08	0010.08	0011.08	0011.08
	0012.08	0010.08	0011.08	0011.08	0011.08	0010.08	0010.08	0011.08
	0011.08	0011.08	0010.08	0010.08	0010.08	0010.08	0010.08	0010.08
16	0010.08	0010.08	0010.08	0010.08	0010.08	0010.08	0011.08	0011.08
	0011.08	0010.08	0010.08	0010.08	0010.08	0010.08	0011.08	0011.08
	0010.08	0010.08	0011.08	0011.08	0011.08	0011.08	0011.08	0012.08
17	0011.08	0011.08	0011.08	0010.08	0009.08	0007.08	0007.08	0008.08
	0011.08	0010.08	0009.08	0010.08	0009.08	0010.08	0010.08	0010.08
	0010.08	0011.08	0011.08	0012.08	0012.08	0012.08	0012.08	0012.08
18	0012.08	0012.08	0012.08	0012.08	0012.08	0011.08	0011.08	0011.08
	0012.08	0010.08	0010.08	0011.08	0011.08	0009.08	0012.08	0014.08
	0013.08	0010.08	0014.08	0011.08	0010.08	0010.08	0010.08	0010.08
19	0010.08	0012.08	0009.08	0010.08	0010.08	0010.08	0010.08	0011.08
	0011.08	0009.08	0010.08	0010.08	0009.08	0009.08	0010.08	0010.08
	0010.08	0010.08	0010.08	0010.08	0009.08	0009.08	0009.08	0009.08
20	0008.08	0008.08	0008.08	0008.08	0008.08	0007.08	0010.08	II16.08
	II21.08	II21.08	II16.08	II21.08	II21.08	II21.08	II21.08	II20.08
	II20.08	0010.08	0011.08	0012.08	0011.08	0011.08	0011.08	0011.08
21	0010.08	0010.08	0010.08	0010.08	0008.08	0008.08	0011.08	II21.08
	II21.08	II21.08	II21.08	0010.08	0011.08	II21.08	II21.08	0009.08
	0009.08	0009.08	0010.08	0011.08	0010.08	0009.08	0010.08	0011.08
22	0011.08	0010.08	0009.08	0009.08	0009.08	0010.08	0011.08	0011.08
	0011.08	0010.08	0010.08	0010.08	II21.08	II21.08	0010.08	0011.08
	0011.08	0010.08	0008.08	0009.08	0009.08	0009.08	0010.08	0011.08
23	0012.08	0012.08	0012.08	0012.08	0011.08	0011.08	0012.08	0012.08
	0012.08	II18.08	II21.08	0011.08	0011.08	0011.08	0011.08	0011.08

STANDARD EMISSIONS REPORT PAGE 3
CEMS ID NO. (+SOURCE ID+ANALYZER ID): 0068910
QUARTER: 4
YEAR: 92

HOUR	1	2	3	4	5	6	7	8
	9	10	11	12	13	14	15	16
	17	18	19	20	21	22	23	24
	XXXX.PC	XXXX.PC	XXXX.PC	XXXX.PC	XXXX.PC	XXXX.PC	XXXX.PC	XXXX.PC
DAY								
	0011.08	0010.08	0009.08	0010.08	0009.08	0009.08	0009.08	0010.08
24	0010.08	0009.08	0008.08	0007.08	0008.08	0008.08	0008.08	0008.08
	0009.08	0009.08	0007.08	0008.08	0009.08	0009.08	0009.08	0010.08
	0009.08	0010.08	0011.08	0011.08	0011.08	0011.08	0012.08	0011.08
25	0011.08	0011.08	0011.08	0011.08	0011.08	0012.08	0012.08	0012.08
	0012.08	II18.08	II18.08	II21.08	0012.08	0012.08	0012.08	0012.08
	0012.08	0012.08	0013.08	0012.08	0012.08	0011.08	0012.08	0012.08
26	0011.08	0012.08	0012.08	0013.08	0012.08	0011.08	0012.08	0012.08
	0011.08	II18.08	0014.08	0012.08	0011.08	0011.08	0011.08	0012.08
	0012.08	0011.08	0011.08	0013.08	0012.08	0012.08	0012.08	0012.08
27	0012.08	0012.08	0012.08	0013.08	0012.08	0012.08	0013.08	0012.08
	II21.08	II21.08	II21.08	II21.08	II21.08	II21.08	0010.08	0010.08
	0010.08	0010.08	0011.08	0011.08	0012.08	0012.08	0011.08	0011.08
28	0011.08	0012.08	0012.08	0012.08	0011.08	0012.08	0011.08	0011.08
	II18.08	0014.08	0013.08	0012.08	0011.08	0012.08	0010.08	0010.08
	0010.08	0011.08	0012.08	0012.08	0012.08	0012.08	0012.08	0012.08
29	0012.08	0012.08	0012.08	0012.08	0012.08	0013.08	0012.08	0012.08
	II18.08	II18.08	II18.08	II18.08	II18.08	II18.08	II18.08	II18.08
	II18.08	II18.08	II18.08	II18.08	II18.08	II18.08	II18.08	II18.08
30	II18.08	II18.08	II18.08	II18.08	II18.08	II18.08	II18.08	0012.08
	0012.08	0011.08	0011.08	0012.08	0012.08	0012.08	0011.08	0011.08
	0011.08	0012.08	0011.08	0010.08	0011.08	0011.08	0011.08	0012.08
31	0012.08	0011.08	0011.08	0012.08	0012.08	0012.08	0012.08	0013.08
	0017.08	0017.08	0017.08	0016.08	0014.08	0012.08	0012.08	0011.08
	0012.08	0011.08	0012.08	0014.08	0015.08	0014.08	0013.08	0013.08
32	0011.08	0011.08	0012.08	0011.08	0011.08	0012.08	0013.08	0013.08
	0013.08	0012.08	0012.08	0012.08	0012.08	0012.08	0013.08	0013.08
	0011.08	0011.08	0012.08	0012.08	0012.08	0012.08	0012.08	0012.08
33	0013.08	0013.08	0014.08	0013.08	0013.08	0013.08	0013.08	0012.08
	0013.08	0011.08	0010.08	0010.08	0008.08	0000.08	0000.08	0000.08
	0000.08	0000.08	0000.08	0000.08	0000.08	0000.08	0000.08	0000.08
34	0000.08	0000.08	0000.08	0000.08	0000.08	II13.08	II13.08	II13.08
	II13.08	II13.08	II13.08	II13.08	II13.08	II13.08	II13.08	II13.08
	II13.08	II13.08	II13.08	II13.08	II13.08	II13.08	II13.08	II13.08
35	II13.08	II13.08	II13.08	II13.08	II13.08	II13.08	0000.08	0000.08
	0000.08	0000.08	0002.08	0001.08	0000.08	0000.08	0000.08	0000.08
	0000.08	0000.08	0000.08	0000.08	0000.08	0000.08	0000.08	0000.08

STANDARD EMISSIONS REPORT PAGE 4
CEMS ID NO. (+SOURCE ID+ANALYZER ID): 0068910
QUARTER: 4
YEAR: 92

HOUR	1	2	3	4	5	6	7	8
	9	10	11	12	13	14	15	16
	17	18	19	20	21	22	23	24
	XXXX.PC	XXXX.PC	XXXX.PC	XXXX.PC	XXXX.PC	XXXX.PC	XXXX.PC	XXXX.PC
DAY								
36	0000.08	0000.08	0000.08	0000.08	0000.08	0000.08	0000.08	II21.08
	II16.08	II16.08	II16.08	II16.08	II16.08	II16.08	II16.08	II16.08
	0008.08	0007.08	0008.08	0008.08	0008.08	0009.08	0009.08	0009.08
37	0009.08	0010.08	0010.08	0011.08	0011.08	0011.08	0011.08	0011.08
	II16.08	II16.08	0012.08	0012.08	0011.08	0011.08	0012.08	0013.08
	0012.08	0013.08	0012.08	0012.08	0012.08	0011.08	0011.08	0011.08
38	0012.08	0011.08	0010.08	0010.08	0011.08	0011.08	0011.08	0012.08
	0013.08	0012.08	0011.08	0011.08	II18.08	0011.08	0011.08	0011.08
	0012.08	0013.08	0013.08	0013.08	0013.08	0013.08	0012.08	0011.08
39	0011.08	0011.08	0011.08	0011.08	0009.08	0010.08	0009.08	0010.08
	0011.08	0011.08	0010.08	0009.08	0008.08	0009.08	0008.08	0010.08
	0011.08	0011.08	0012.08	0011.08	0011.08	0011.08	0010.08	0009.08
40	0010.08	0012.08	0011.08	0010.08	0010.08	0010.08	0009.08	0010.08
	0011.08	0009.08	0009.08	0009.08	0009.08	0009.08	0009.08	0009.08
	0010.08	0011.08	0010.08	0010.08	0011.08	0011.08	0011.08	0012.08
41	0012.08	0011.08	0010.08	0011.08	0011.08	0011.08	0011.08	0012.08
	0012.08	0010.08	0010.08	0011.08	0011.08	0011.08	0010.08	0011.08
	0011.08	0011.08	0012.08	0012.08	0012.08	0012.08	0011.08	0010.08
42	0010.08	0010.08	0010.08	0010.08	0011.08	0011.08	0011.08	0011.08
	0012.08	0011.08	0012.08	0011.08	0011.08	0010.08	0011.08	0011.08
	0010.08	0011.08	0011.08	0011.08	0011.08	0011.08	0010.08	0009.08
43	0010.08	0011.08	0011.08	0011.08	0012.08	0012.08	0013.08	0014.08
	II21.08	0013.08	0012.08	0011.08	0011.08	0011.08	0010.08	0011.08
	0013.08	0013.08	0013.08	0013.08	0012.08	0012.08	0012.08	0013.08
44	0014.08	0014.08	0014.08	0013.08	0014.08	0014.08	0014.08	0013.08
	II16.08	II16.08	II16.08	II16.08	0015.08	0015.08	0014.08	0014.08
	0014.08	0016.08	0015.08	0014.08	0014.08	0012.08	0012.08	0012.08
45	0012.08	0013.08	0014.08	0013.08	0014.08	0014.08	0013.08	0013.08
	II21.08	0013.08	0012.08	0012.08	0013.08	0014.08	0014.08	0013.08
	0013.08	0013.08	0013.08	0012.08	0012.08	0012.08	0012.08	0012.08
46	0012.08	0012.08	0013.08	0012.08	0012.08	0012.08	0012.08	0012.08
	II21.08	II21.08	0013.08	0012.08	0012.08	0012.08	0013.08	0012.08
	0012.08	0012.08	0013.08	0012.08	0012.08	0011.08	0012.08	0012.08
47	0011.08	0011.08	0012.08	0011.08	0011.08	0012.08	0013.08	0012.08
	II16.08	II16.08	II16.08	II16.08	0011.08	0011.08	0011.08	0011.08
	0011.08	0012.08	0012.08	0011.08	0010.08	0011.08	0011.08	0011.08
48	0011.08	0011.08	0011.08	0011.08	0011.08	0011.08	0011.08	0011.08

STANDARD EMISSIONS REPORT PAGE 5
CEMS ID NO. (+SOURCE ID+ANALYZER ID): 0068910
QUARTER: 4
YEAR: 92

HOUR	1	2	3	4	5	6	7	8
	9	10	11	12	13	14	15	16
	17	18	19	20	21	22	23	24
	XXXX.PC	XXXX.PC	XXXX.PC	XXXX.PC	XXXX.PC	XXXX.PC	XXXX.PC	XXXX.PC
DAY								
	II16.08	II16.08	0014.08	0012.08	0011.08	0011.08	0011.08	0011.08
	0011.08	0011.08	0011.08	0010.08	0010.08	0011.08	0011.08	0010.08
49	0010.08	0010.08	0011.08	0010.08	0010.08	0011.08	0010.08	0011.08
	0012.08	0011.08	0011.08	0011.08	0011.08	0011.08	0011.08	0011.08
	0011.08	0012.08	0012.08	0011.08	0011.08	0012.08	II16.08	0011.08
50	0011.08	0012.08	0012.08	0011.08	0011.08	0011.08	0012.08	0011.08
	II21.08	0012.08	0012.08	0011.08	0011.08	0012.08	0012.08	0011.08
	0011.08	0012.08	0012.08	0012.08	0012.08	0011.08	0011.08	0010.08
51	0010.08	0010.08	0011.08	0011.08	0010.08	0010.08	0011.08	II21.08
	0009.08	0010.08	0011.08	0010.08	0011.08	0010.08	0010.08	0011.08
	0011.08	0011.08	0011.08	0011.08	0011.08	0011.08	0011.08	0011.08
52	0012.08	0011.08	0010.08	0011.08	0011.08	0011.08	0011.08	0012.08
	II21.08	0011.08	0011.08	0012.08	0011.08	0011.08	0011.08	0012.08
	0011.08	0011.08	0011.08	0011.08	0011.08	0011.08	0011.08	0012.08
53	0011.08	0011.08	0011.08	0011.08	0012.08	0011.08	0010.08	0011.08
	0012.08	0011.08	0011.08	0011.08	0011.08	0010.08	0011.08	0011.08
	0011.08	0010.08	0011.08	0011.08	0012.08	0011.08	0011.08	0011.08
54	0011.08	0011.08	0012.08	0014.08	0015.08	0015.08	0014.08	0013.08
	0014.08	0013.08	0013.08	0013.08	0014.08	0013.08	0012.08	0012.08
	0013.08	0013.08	0012.08	0013.08	0014.08	0013.08	0012.08	0013.08
55	0014.08	0012.08	0013.08	0014.08	0015.08	0014.08	0013.08	0014.08
	II12.08	II12.08	0012.08	0013.08	0012.08	0012.08	0012.08	0013.08
	0013.08	0012.08	0012.08	0012.08	0012.08	0012.08	0011.08	0012.08
56	0011.08	0011.08	0011.08	0012.08	0012.08	0012.08	0012.08	0012.08
	II21.08	II21.08	0012.08	0012.08	0011.08	0012.08	0012.08	0013.08
	0013.08	0013.08	0013.08	0013.08	0012.08	0011.08	0011.08	0011.08
57	0011.08	0012.08	0012.08	0011.08	0011.08	0011.08	0011.08	0011.08
	0011.08	0012.08	0013.08	0014.08	0013.08	0013.08	0013.08	0013.08
	0013.08	0013.08	0012.08	0012.08	0013.08	0012.08	0012.08	0013.08
58	0013.08	0012.08	0009.08	0008.08	0007.08	0008.08	0010.08	0014.08
	0014.08	0012.08	0012.08	0012.08	0012.08	0012.08	0012.08	0013.08
	0012.08	0012.08	0012.08	0013.08	0013.08	0012.08	0011.08	0012.08
59	0012.08	0011.08	0012.08	0012.08	0012.08	0011.08	0011.08	0012.08
	0011.08	0011.08	0011.08	0012.08	0011.08	0011.08	0010.08	0011.08
	0005.08	0005.08	0007.08	0010.08	0014.08	0015.08	0014.08	0014.08
60	0013.08	0012.08	0012.08	0013.08	0013.08	0012.08	0012.08	0013.08
	0014.08	0013.08	0013.08	0013.08	0013.08	0012.08	0013.08	0013.08

STANDARD EMISSIONS REPORT PAGE 6
CEMS ID NO. (+SOURCE ID+ANALYZER ID): 0068910
QUARTER: 4
YEAR: 92

HOUR	1	2	3	4	5	6	7	8
	9	10	11	12	13	14	15	16
	17	18	19	20	21	22	23	24
	XXXX.PC	XXXX.PC	XXXX.PC	XXXX.PC	XXXX.PC	XXXX.PC	XXXX.PC	XXXX.PC
DAY								
	0010.08	0010.08	0010.08	0011.08	0011.08	0010.08	0004.08	0007.08
61	0017.08	0011.08	0010.08	0012.08	0012.08	0011.08	0011.08	0011.08
	0011.08	0011.08	0011.08	0011.08	0011.08	II21.08	0011.08	0011.08
	0011.08	0011.08	0011.08	0011.08	0012.08	0012.08	0011.08	0011.08
62	0011.08	0012.08	0011.08	0011.08	0011.08	0012.08	0012.08	0014.08
	0012.08	0011.08	0012.08	0013.08	0011.08	0011.08	II21.08	0012.08
	0012.08	0012.08	0013.08	0014.08	0014.08	0011.08	0013.08	0012.08
63	0013.08	0012.08	0013.08	0013.08	0013.08	0012.08	0013.08	0013.08
	0013.08	0013.08	0013.08	0014.08	0012.08	0012.08	0012.08	0012.08
	0012.08	0012.08	0012.08	0013.08	0012.08	0011.08	0012.08	0013.08
64	0013.08	0013.08	0013.08	0013.08	0012.08	0012.08	0011.08	0011.08
	0010.08	0011.08	0012.08	0013.08	0012.08	0012.08	0012.08	0012.08
	0011.08	0012.08	0012.08	0013.08	0012.08	0011.08	0011.08	0012.08
65	0011.08	0010.08	0011.08	0012.08	0012.08	0012.08	0012.08	0013.08
	0013.08	0012.08	0013.08	II21.08	0012.08	0012.08	0012.08	0013.08
	0013.08	0014.08	0014.08	0013.08	0012.08	0013.08	0013.08	0014.08
66	0013.08	0013.08	0013.08	0014.08	0013.08	0014.08	0017.08	0015.08
	0014.08	0013.08	0014.08	0015.08	0013.08	0013.08	0012.08	0013.08
	0012.08	0012.08	0013.08	0014.08	0014.08	0014.08	0014.08	0015.08
67	0014.08	0014.08	0014.08	0015.08	0014.08	0014.08	0014.08	0014.08
	0013.08	0013.08	0014.08	II21.08	0015.08	0014.08	0013.08	0014.08
	0014.08	0014.08	0014.08	0015.08	0014.08	0014.08	0014.08	0014.08
68	0014.08	0014.08	0014.08	0014.08	0014.08	0014.08	0014.08	0015.08
	0014.08	0014.08	0014.08	0016.08	0015.08	0014.08	0014.08	0014.08
	0014.08	0014.08	0014.08	0015.08	0014.08	0014.08	0014.08	0016.08
69	0014.08	0013.08	0013.08	0014.08	0014.08	0014.08	0014.08	0015.08
	0014.08	0013.08	0014.08	0014.08	0014.08	0013.08	0013.08	0014.08
	0013.08	0012.08	II18.08	II18.08	II18.08	II18.08	II18.08	II18.08
70	II18.08	II18.08	II18.08	II18.08	II18.08	II18.08	II18.08	II18.08
	II18.08	II18.08	II18.08	II18.08	II18.08	II18.08	II18.08	II18.08
	II18.08	II18.08	II18.08	II18.08	II18.08	II18.08	II18.08	II18.08
71	II18.08	II18.08	II18.08	II18.08	II18.08	II18.08	II18.08	II18.08
	II18.08	II18.08	II18.08	II18.08	II18.08	II18.08	II18.08	II18.08
	II18.08	II18.08	II18.08	II18.08	II18.08	II18.08	II18.08	II18.08
72	II18.08	II18.08	II18.08	II18.08	II18.08	II18.08	II18.08	II18.08
	II18.08	II18.08	II18.08	II18.08	II18.08	II18.08	II18.08	II18.08
	II18.08	II18.08	II18.08	II18.08	II18.08	II18.08	II18.08	II18.08

STANDARD EMISSIONS REPORT PAGE 7
CEMS ID NO. (+SOURCE ID+ANALYZER ID): 0068910
QUARTER: 4
YEAR: 92

HOUR	1	2	3	4	5	6	7	8
	9	10	11	12	13	14	15	16
	17	18	19	20	21	22	23	24
	XXXX.PC	XXXX.PC	XXXX.PC	XXXX.PC	XXXX.PC	XXXX.PC	XXXX.PC	XXXX.PC
DAY								
73	II18.08	II18.08	II18.08	II18.08	II18.08	II18.08	II18.08	II18.08
	II18.08	II18.08	II18.08	II18.08	II18.08	II18.08	II18.08	II18.08
	II18.08	II18.08	II18.08	II18.08	II18.08	II18.08	II18.08	II18.08
74	II18.08	II18.08	II18.08	II18.08	II18.08	II18.08	II18.08	II18.08
	II18.08	II18.08	II18.08	II18.08	II18.08	II18.08	II18.08	II18.08
	II18.08	II18.08	II18.08	II18.08	II18.08	II18.08	II18.08	II18.08
75	II18.08	II18.08	II18.08	II18.08	II18.08	II18.08	II18.08	II18.08
	II18.08	II18.08	II18.08	II18.08	II18.08	II18.08	II18.08	II18.08
	II18.08	II18.08	II18.08	II18.08	II18.08	II18.08	II18.08	II18.08
76	II18.08	II18.08	II18.08	II18.08	II18.08	II18.08	II18.08	II18.08
	II18.08	II18.08	II18.08	II18.08	II18.08	II18.08	II18.08	II18.08
	II18.08	II18.08	II18.08	II18.08	II18.08	II18.08	II18.08	II18.08
77	II18.08	II18.08	II18.08	II18.08	II18.08	II18.08	II18.08	II18.08
	II18.08	II18.08	II18.08	II18.08	II18.08	II18.08	II18.08	II18.08
	II18.08	II18.08	II18.08	II18.08	II18.08	II18.08	II18.08	II18.08
78	II18.08	II18.08	II18.08	II18.08	II18.08	II18.08	II18.08	II18.08
	II18.08	II18.08	II18.08	II18.08	II18.08	II18.08	II18.08	II18.08
	II18.08	II18.08	II18.08	II18.08	II18.08	II18.08	II18.08	II18.08
79	II18.08	II18.08	II18.08	II18.08	II18.08	II18.08	II18.08	II18.08
	II18.08	II18.08	II18.08	II18.08	II18.08	II18.08	II18.08	II18.08
	II18.08	II18.08	II18.08	II18.08	II18.08	II18.08	II18.08	II18.08
80	II18.08	II18.08	II18.08	II18.08	II18.08	II18.08	II18.08	II18.08
	II18.08	II18.08	II18.08	II18.08	II18.08	II18.08	II18.08	II18.08
	II18.08	II18.08	II18.08	II18.08	II18.08	II18.08	II18.08	II18.08
81	II18.08	II18.08	II18.08	II18.08	II18.08	II18.08	II18.08	II18.08
	II18.08	II18.08	II18.08	II18.08	II18.08	II18.08	II18.08	II18.08
	II18.08	II18.08	II18.08	II18.08	II18.08	II18.08	II18.08	II18.08
82	II18.08	II18.08	II18.08	II18.08	II18.08	II18.08	II18.08	II18.08
	II18.08	II18.08	II18.08	II18.08	II18.08	II18.08	II18.08	II18.08
	II18.08	II18.08	II18.08	II18.08	II18.08	II18.08	II18.08	II18.08
83	II18.08	II18.08	II18.08	II18.08	II18.08	II18.08	II18.08	II18.08
	II18.08	II18.08	II18.08	II18.08	II18.08	II18.08	II18.08	II18.08
	II18.08	II18.08	II18.08	II18.08	II18.08	II18.08	II18.08	II18.08
84	II18.08	II18.08	II18.08	II18.08	II18.08	II18.08	II18.08	II18.08
	II18.08	II18.08	II18.08	II18.08	II18.08	II18.08	II18.08	II18.08
	II18.08	II18.08	II18.08	II18.08	II18.08	II18.08	II18.08	II18.08
85	II18.08	II18.08	II18.08	II18.08	II18.08	II18.08	II18.08	II18.08

STANDARD EMISSIONS REPORT PAGE 8
CEMS ID NO. (+SOURCE ID+ANALYZER ID): 0068910
QUARTER: 4
YEAR: 92

HOUR	1	2	3	4	5	6	7	8
	9	10	11	12	13	14	15	16
	17	18	19	20	21	22	23	24
	XXXX.PC	XXXX.PC	XXXX.PC	XXXX.PC	XXXX.PC	XXXX.PC	XXXX.PC	XXXX.PC
DAY								
	II18.08	II18.08	II18.08	II18.08	II18.08	II18.08	II18.08	II18.08
	II18.08	II18.08	II18.08	II18.08	II18.08	II18.08	II18.08	II18.08
86	II18.08	II18.08	II18.08	II18.08	II18.08	II18.08	II18.08	II18.08
	II18.08	II18.08	II18.08	II18.08	II18.08	II18.08	II18.08	II18.08
	II18.08	II18.08	II18.08	II18.08	II18.08	II18.08	II18.08	II18.08
87	II18.08	II18.08	II18.08	II18.08	II18.08	II18.08	II18.08	II18.08
	II18.08	II18.08	II18.08	II18.08	II18.08	II18.08	II18.08	II18.08
	II18.08	II18.08	II18.08	II18.08	II18.08	II18.08	II18.08	II18.08
88	II18.08	II18.08	II18.08	II18.08	II18.08	II18.08	II18.08	II18.08
	II18.08	II18.08	II18.08	II18.08	II18.08	II18.08	II18.08	II18.08
	II18.08	II18.08	II18.08	II18.08	II18.08	II18.08	II18.08	II18.08
89	II18.08	II18.08	II18.08	II18.08	II18.08	II18.08	II18.08	II18.08
	II18.08	II18.08	II18.08	II18.08	II18.08	II18.08	II18.08	II18.08
	II18.08	II18.08	II18.08	II18.08	II18.08	II18.08	II18.08	II18.08
90	II18.08	II18.08	II18.08	II18.08	II18.08	II18.08	II18.08	II18.08
	II18.08	II18.08	II18.08	II18.08	II18.08	II18.08	II18.08	II18.08
	II18.08	II18.08	II18.08	II18.08	II18.08	II18.08	II18.08	II18.08
91	II18.08	II18.08	II18.08	II18.08	II18.08	II18.08	II18.08	II18.08
	II18.08	II18.08	II18.08	II18.08	II18.08	II18.08	II18.08	II18.08
	II18.08	II18.08	II18.08	II18.08	II18.08	II18.08	II18.08	II18.08
92	II18.08	II18.08	II18.08	II18.08	II18.08	II18.08	II18.08	II18.08
	II18.08	II18.08	II18.08	II18.08	II18.08	II18.08	II18.08	II18.08
	II18.08	II18.08	II18.08	II18.08	II18.08	II18.08	II18.08	II18.08

CALIBRATION ERROR CHECK RESULTS (%):
ID
LO
MD
HI

PROCESS CODES (PC):

01= CHANGING FUELS	04= SHUTDOWN	07= CLEAN CONTROL EQUIP.
02= CONTROL EQUIP. MALF.	05= CHANGING OPERATING LEVEL	08= NORMAL OPERATION
03= STARTUP	06= CLEAN PROCESS EQUIP.	09= OTHER

MONITORING CODES (MC) (XXXX=IIMC if invalid):

10= REQUIRED ADJUSTMENT NOT MADE	16= PRIMARY ANALYZER MALFUNCTION
11= EXCESS DRIFT PRIMARY ANALYZER	17= ANCILLARY ANALYZER MALFUNCTION
12= EXCESS DRIFT ANCILLARY ANALYZER	18= DATA HANDLING SYSTEM MALFUNCTION
13= PROCESS DOWN	19= SAMPLE INTERFACE MALFUNCTION
14= RECALIBRATION	20= CORRECTIVE MAINTENANCE
15= PREVENTIVE MAINTENANCE	21= OTHER

TO THE BEST OF MY KNOWLEDGE, THE INFORMATION IN THIS REPORT REPRESENTS TRUE AND ACCURATE DATA.

XXXX = PPM FOR HCL,SO2,CO,NOX
%X100 FOR O2,C.E.,SO2R HCLR,OPACITY
DEG FOR TEMPERATURE

SIGNED _____

TITLE _____

APPENDIX D System Design & Flow Diagrams

C.1. Distance Between Stacks = 53'-6

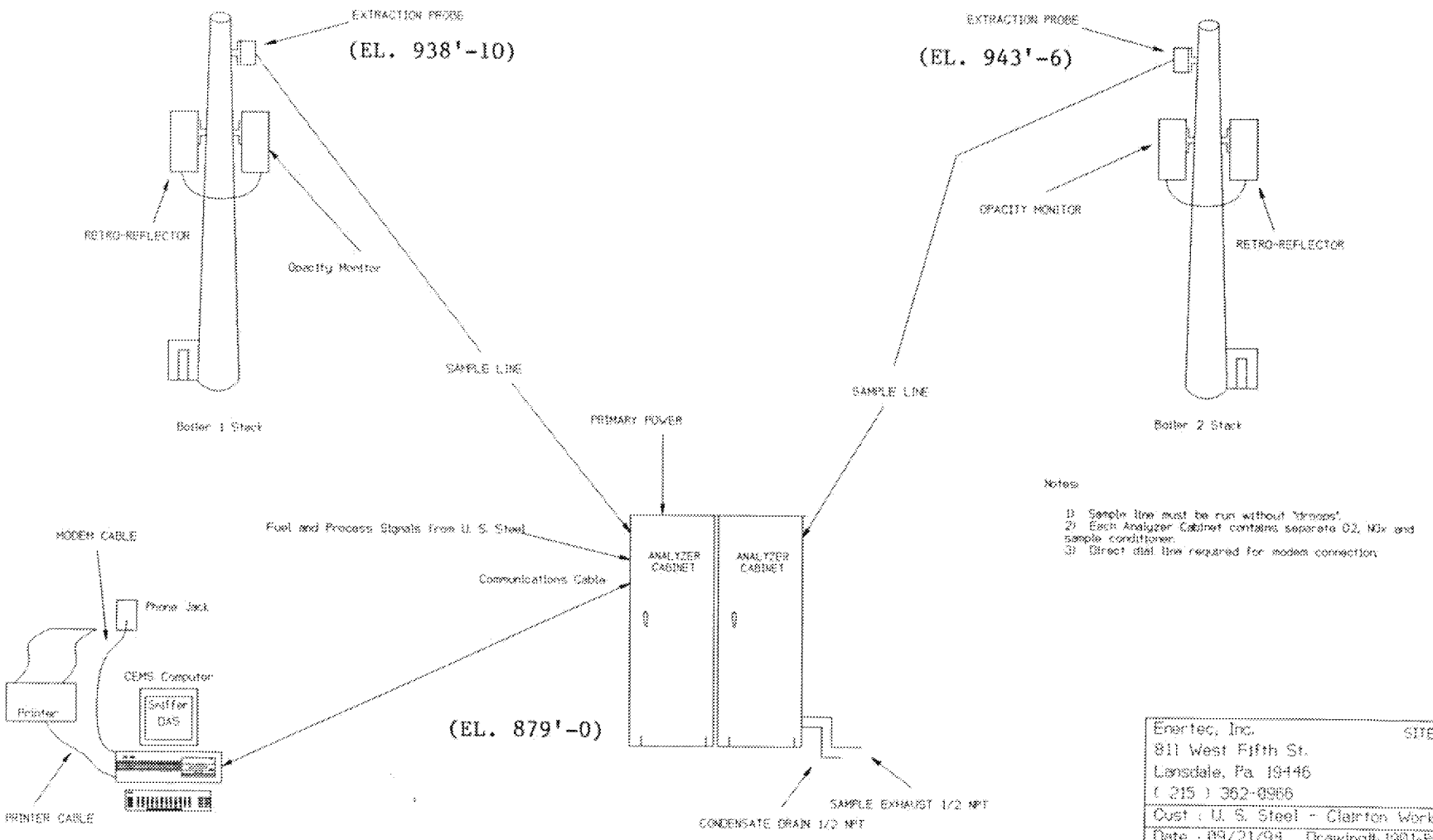

Notes:

1) Sample line must be run without "droops".
2) Each Analyzer Cabinet contains separate O2, NOx and sample conditioner.
3) Direct dial line required for modem connection.

Enertec, Inc. 811 West Fifth St. Lansdale, Pa. 19446 (215) 362-0966	SITE_H
Cust : U. S. Steel - Clairton Works	
Date : 09/21/94 Drawing# 1301-P01	
TITLE SYSTEM OVERVIEW CONSTANT EMMISSIONS MONITOR	
Rev	Rev
Rev	Rev

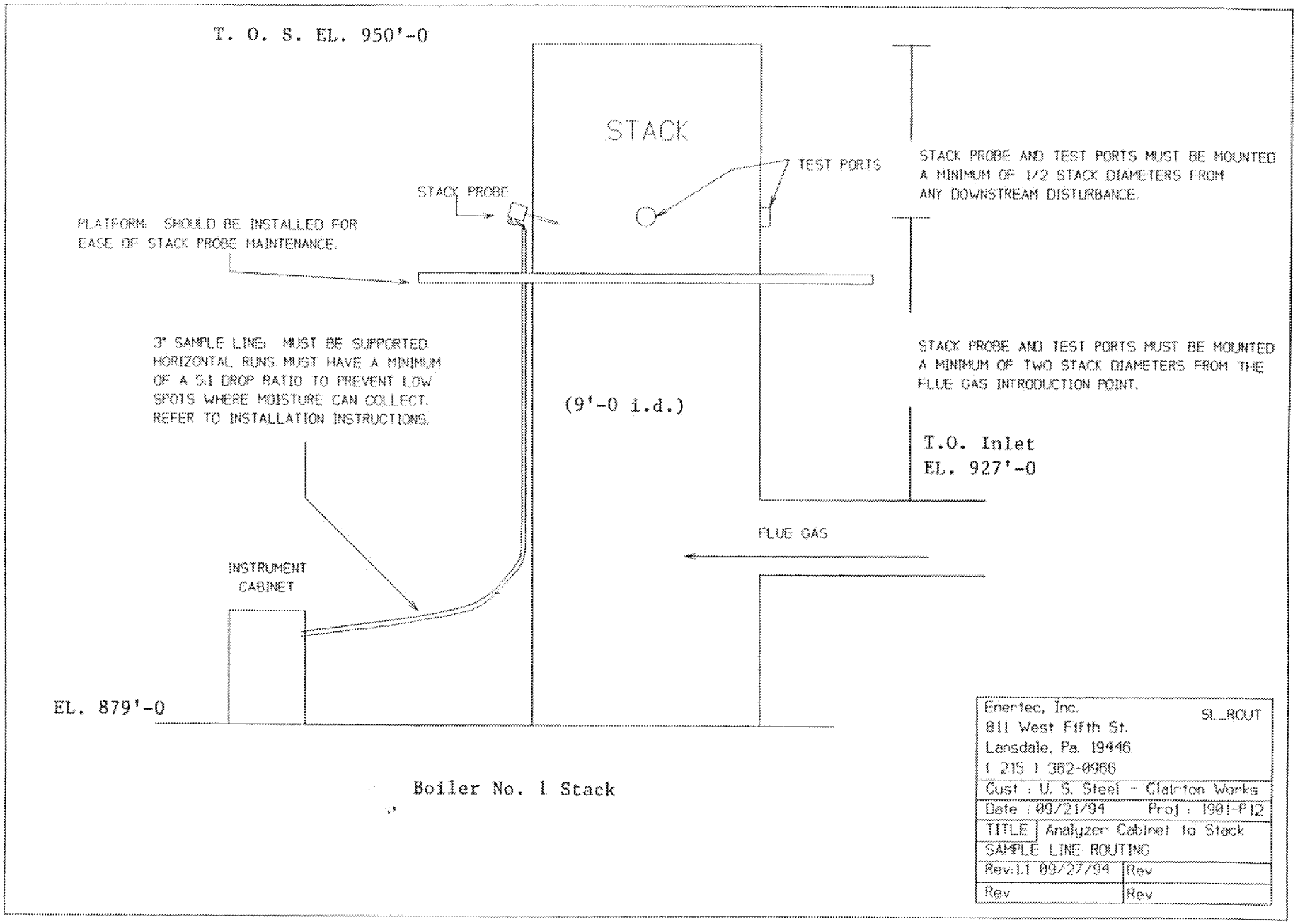

Boiler No. 1 Stack

ED_002508A_00000338-00038

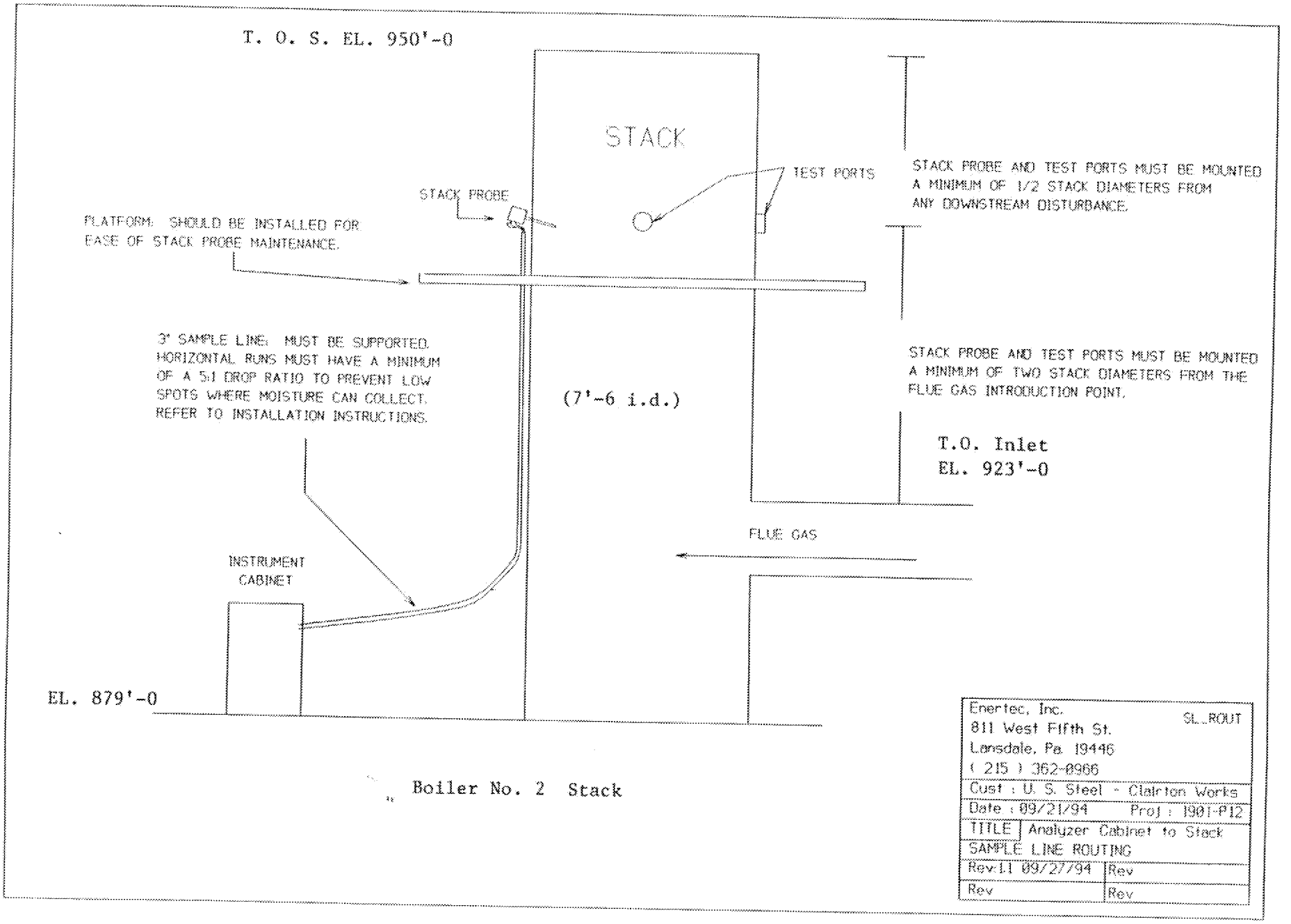

ED_002508A_00000338-00039

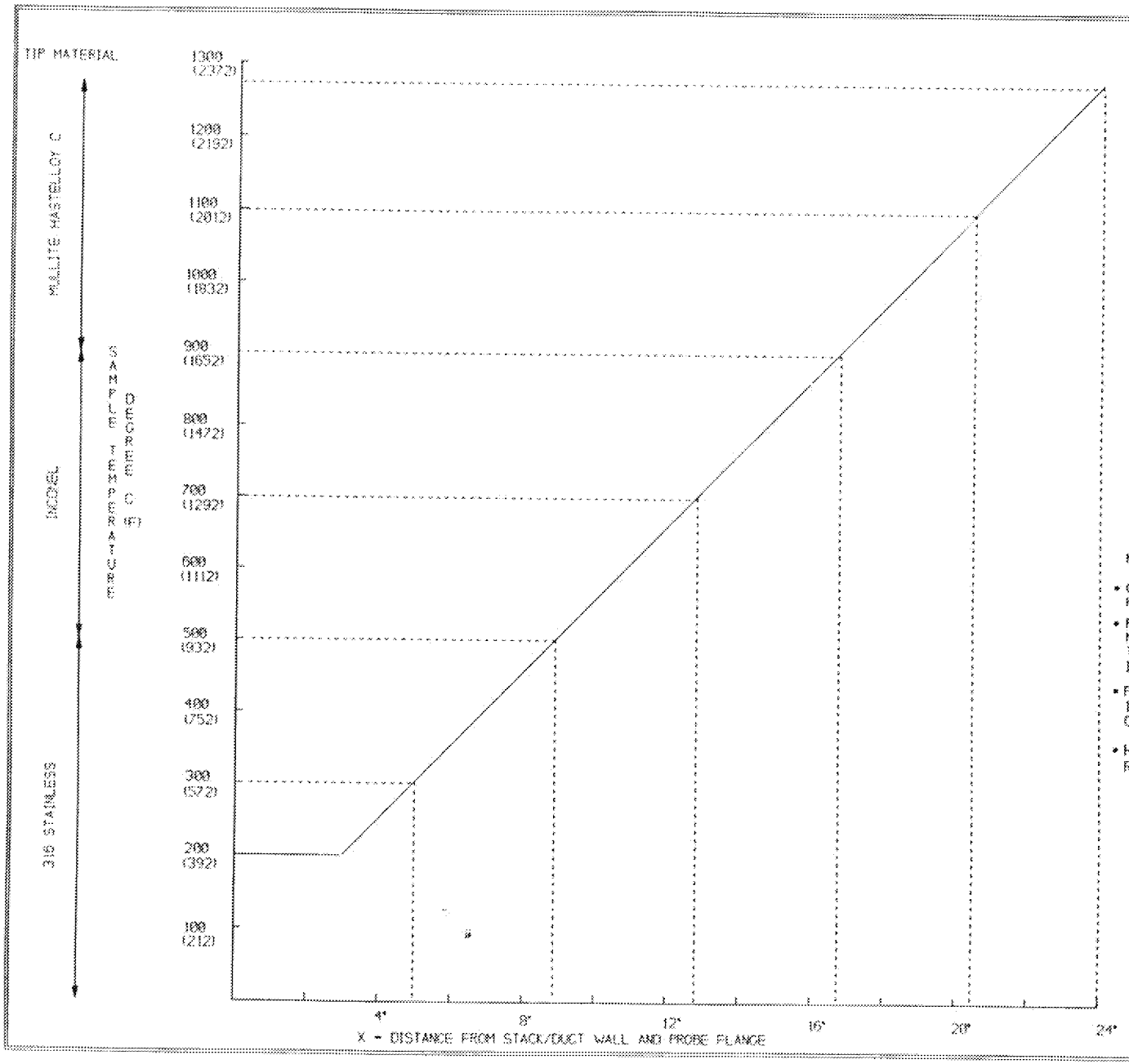

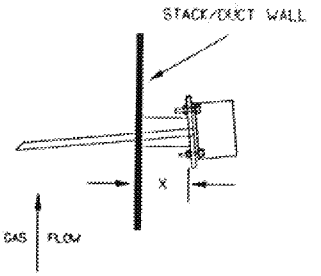

NOTES:

- GAS FLOW AT THE PROBE MUST BE HOMOGENEOUS, NOT STRATIFIED
- PROBE LOCATION MUST SATISFY MINIMUM DUCT DIAMETERS DOWNSTREAM OF THE NEAREST STRATIFICATION POINT AS DEFINED IN 40 CFR 60
- PROBE ANGLE CAN BE FROM 1 TO 30 DEGREES TO PREVENT CONDENSATE FROM RUNNING DOWN THE PROBE
- HASTELLOY C-22 HAS THE BEST CORROSION RESISTANCE, REGARDLESS OF TEMPERATURE

Enertec, Inc. 811 West Fifth St. Lansdale, Pa. 19446 (215) 362-0966	FLNG_MNT
Cust : U. S. Steel - Clairton Works	
Date : 09/21/94 Drawing#: 1901-P03	
TITLE PROBE FLANGE B-Battery MOUNTING PIPE LENTH	
Rev	Rev
Rev	Rev

APPENDIX E Equations and calculations

F Calculations for Emissions

1. Mass Emission Calculations

Method 19 & 20 are used to calculate the mass emission output for CO (lb/MMBTU), CO (lb/hr), NOx (lb/MMBTU) and NOx (lb/hr).

This document contains several calcuations needed to calculate a quantitative measurement of an emission.

The references for these calcuations are found in 40CFR60 Appendix A. Method 19 and 20.

2. Conversion factor(s) used to determine Concentration (C_d)

From	To	Multiply by
ppm NOx	lb/scf	1.194×10^{-7}

3. Dry Fuel factor(s) F_d (Method 19, table 19-1) :

Fuel (F_d)	dscf per MMBTU
Natural gas	8,710
Number 2 oil	9,190
Coke oven Gas	Determined on a real time basis from gas analysis
Bituminous	9,780

G Thermal input:

Using the fuel input flow rate and the fuel heat content factor, the "Thermal Input" TI (MMBTU/hr) factor can be calculated.

The units are Standard Cubic Feet (SCF), Million Btu's (MMBtu's) and Heating Value measured as MMBtu's per SCF of fuel (HV).

The two fuels used are natural gas and #2 fuel oil. Their high heating values (HHV) are:

Fuel	HHV
Natural gas	1,040 Btu/SCF
Number 2 oil	140,000 Btu/Gallon
Coke Oven Gas	(to be supplied)
Bituminous	9,780

The equations are as follows.

example for natural gas:

TI (MMBTU/hr) = (Fuel flow (dscf/hr) * HHV) * 10^{-6} MMBTU/BTU

420 MMBtu/hr = (403,846 (dscf/hr) * 1,040) * 10^{-6}

ED_002508A_00000338-00041

1. Calculation from E (lbs/MMBTU) with O_2 diluent:

The references for this calcuation are found in 40CFR60 Appendix A. Method 19 equation 19-1 and Method 20 equation 20-6.

example:

$$E\ (lbs/MMBTU) = (C_d * F_d) * [20.9 / (20.9 - O_2)]$$

Assume current O_2 value is 14.0% and NOX value is 18ppm (not corrected for O_2). Also assume the fuel burned is natural gas with a fuel factor of 8710.

$$E\ (lbs/MMBTU) = C_d \qquad F_d \qquad O_2\ comp.$$

$$0.05700\ (lbs/MMBTU) = (18ppm * (1.194 * 10^{-7})) * 8,710 * [20.9/(20.9 - 14.0)]$$

Where:

E (lbs/MMBTU) = Calculated emission rate in lbs/MMBTU

C_d = Pollutant reading in lbs/scf

C_d (for NOx) = [NOx (ppm) * $1.194 * 10^{-7}$]

F_d = Fuel factor (from table)

2. Calculation for E (lbs/hr):

E (lbs/hr) = E (lbs/MMBTU) * TI (MMBTU/hr)

3. Combination of two fuels:

Using the previously defined TI calculation on two or more different fuels. A combined fuel factor can be determined.

$$F_{comb} = \frac{(TI(Fuel\ 1) * (Fuel\ 1\ factor) + TI(Fuel\ 2) * (Fuel\ 2\ factor) + \ldots)}{(TI(Fuel\ 1) + TI(Fuel\ 2) + \ldots)}$$

APPENDIX H Oxygen Analyzer Manufacturer Specifications

SERVOMEX 1400B LIGHT INDUSTRIAL GAS ANALYSER

Servomex
LEADERS IN GAS ANALYSIS

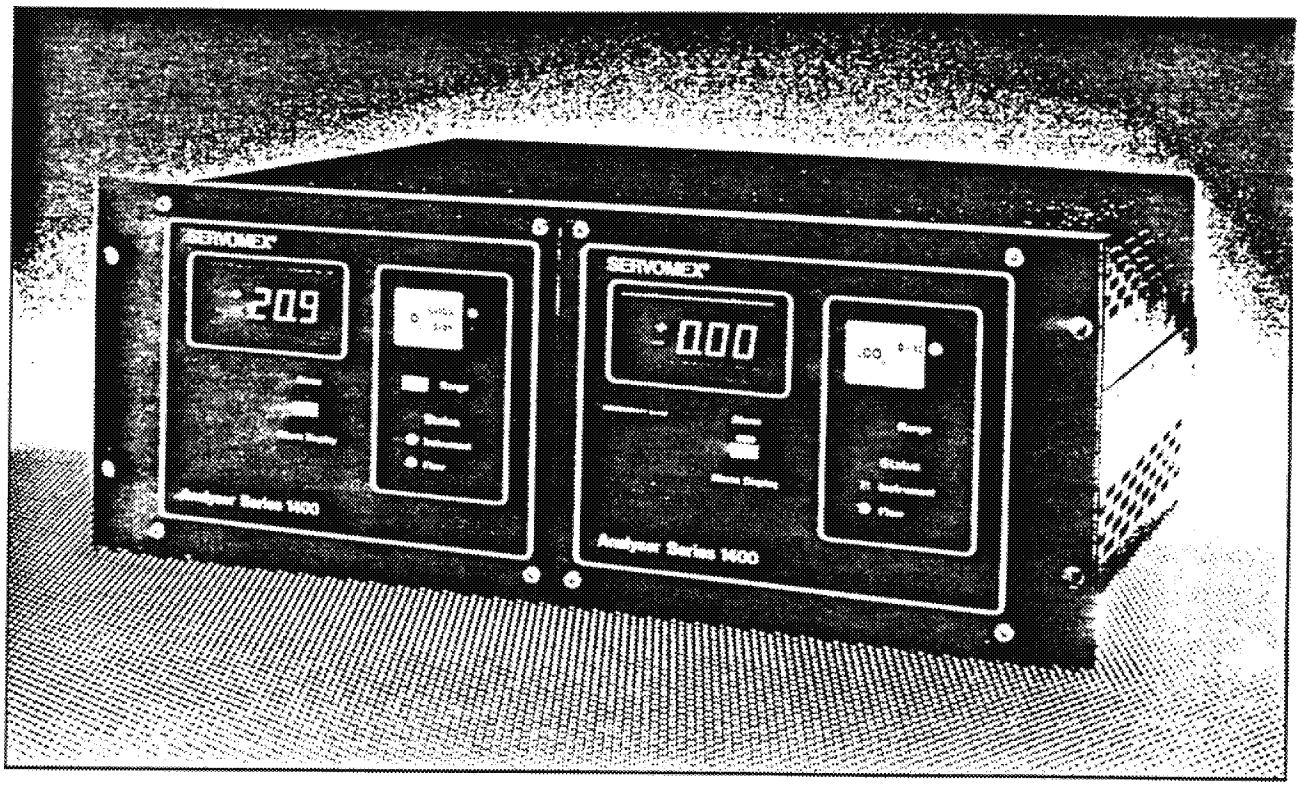

FEATURES	BENEFITS
● Paramagnetic Oxygen and Infrared Transducers	Suitable for a wide range of applications
● 19" Rack, Panel Mount and Bench-Top Cases	Meets User's configuration requirements
● Voltage and Current Outputs	Interfaces with the user's data recording device

Introduction to 1400B Series

The Servomex 1400B Series meets the light industrial market's requirement for a moderately priced, high performance, general purpose analyser.

Servomex offers the 1400B in three user selected case configurations: 19" rack mounting, panel mounting and bench-top. The above picture shows a dual unit 1400B in a 19" rack mounting case.

The 1400B Series features high visibility LED displays, dual linear electrical outputs: 0-1VDC non-isolated, and 4-20mA isolated, dual concentration alarms and (for non flammable samples) flow alarm all as standard.

A back pressure regulator option is available on standard 1400B analysers to reduce the effects of barometric or sample vent pressure changes when the 1400B is used for measuring high concentrations of oxygen or other gases.

The 1400B Series now offers three types of transducers, each meeting a requirement of the light industrial market:

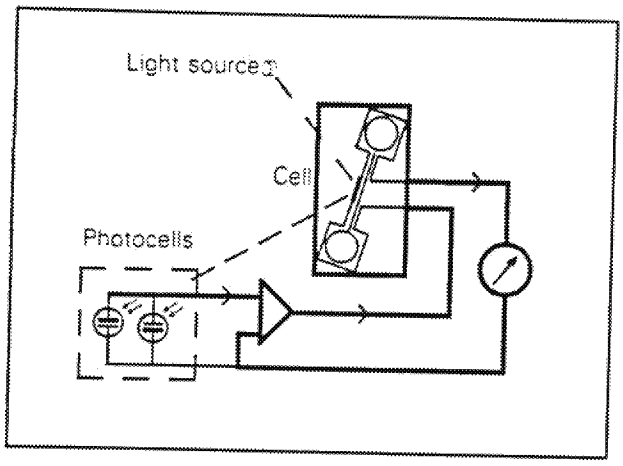

Magneto-dynamic Paramagnetic Oxygen Transducer

A magneto-dynamic paramagnetic oxygen transducer (shown above) provides excellent accuracy between 0.1 and 100% oxygen, fast response and the capability of measuring oxygen in the presence of hydrocarbons.

Unlike fuel cell oxygen sensors, the Servomex sensor is unaffected by acid gases, cannot be poisoned and has an unlimited life. Since oxygen is one of only a few gases that exhibit paramagnetism (attraction by a magnetic field) this sensor is highly specific to oxygen when measured in a wide variety of background gases.

The paramagnetic oxygen transducer is maintained above ambient temperature to increase temperature stability.

The 1400B is also available in a version suitable for the analysis of oxygen in flammable samples.

New Single-Beam, Single Wavelength Infrared Transducer

Servomex offers a full range of new single-beam, single wavelength IR transducers for CO_2 analysis in non-flammable gases (See diagram).

The wide choice of full scale ranges ensures that an IR transducer can be chosen which gives maximum sensitivity and accuracy for the user's application. Other gases will be added to this new transducer's capabilities.

A sealed, pulsed, infrared source and narrow bandpass filter replace the traditional chopper motor and dual filters used in most conventional IR benches. This reduces the unit's cost while

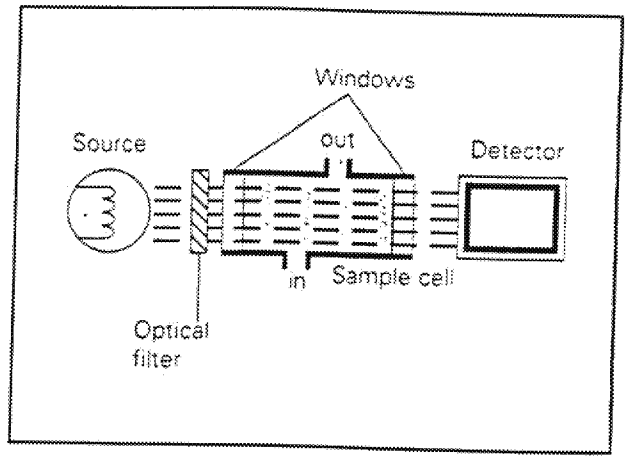

providing increased reliability and reduced maintenance by elimination of moving parts.

For increased measurement stability, the cell is heated and temperature controlled to 60°C.

Single-Beam, Dual Wavelength Infrared Transducer

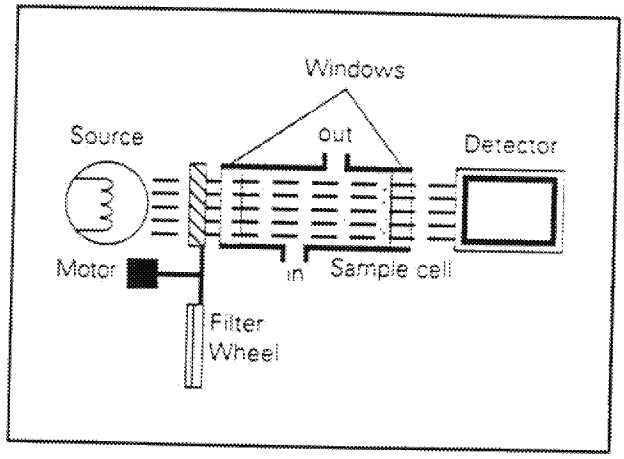

A single-beam, dual wavelength IR transducer (shown above) is offered for the analysis of gases other than CO_2 and for CO_2 in flammable and toxic samples. Common measurements with this transducer include CH_4, CO, solvents, and SF_6. The transducer has excellent long term stability and high rejection of common mode errors introduced by obscuration of the cell end windows.

The user may select a full scale range that fits his application.

Options offered with this bench are dual ranges and hard piping for flammable gas analysis.

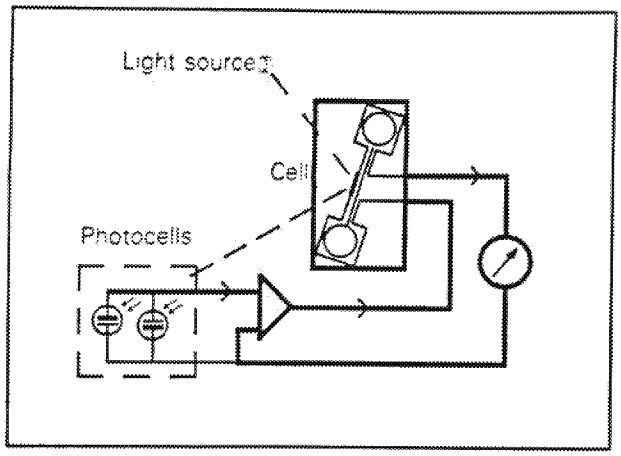

Magneto-dynamic Paramagnetic Oxygen Transducer

A magneto-dynamic paramagnetic oxygen transducer (shown above) provides excellent accuracy between 0.1 and 100% oxygen, fast response and the capability of measuring oxygen in the presence of hydrocarbons.

Unlike fuel cell oxygen sensors, the Servomex sensor is unaffected by acid gases, cannot be poisoned and has an unlimited life. Since oxygen is one of only a few gases that exhibit paramagnetism (attraction by a magnetic field) this sensor is highly specific to oxygen when measured in a wide variety of background gases.

The paramagnetic oxygen transducer is maintained above ambient temperature to increase temperature stability.

The 1400B is also available in a version suitable for the analysis of oxygen in flammable samples.

New Single-Beam, Single Wavelength Infrared Transducer

Servomex offers a full range of new single-beam, single wavelength IR transducers for CO_2 analysis in non-flammable gases (See diagram).

The wide choice of full scale ranges ensures that an IR transducer can be chosen which gives maximum sensitivity and accuracy for the user's application. Other gases will be added to this new transducer's capabilities.

A sealed, pulsed, infrared source and narrow bandpass filter replace the traditional chopper motor and dual filters used in most conventional IR benches. This reduces the unit's cost while

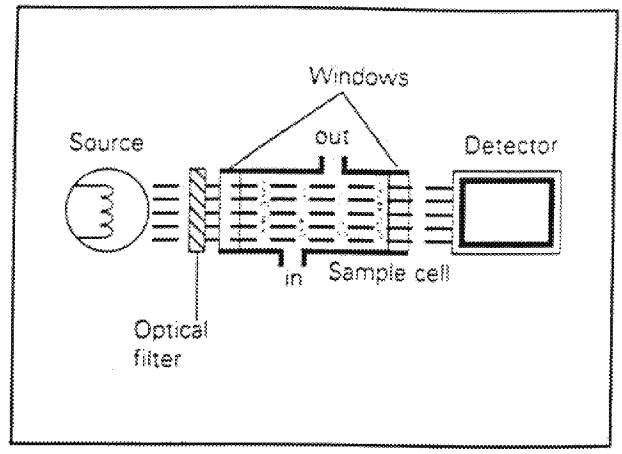

providing increased reliability and reduced maintenance by elimination of moving parts.

For increased measurement stability, the cell is heated and temperature controlled to 60°C.

Single-Beam, Dual Wavelength Infrared Transducer

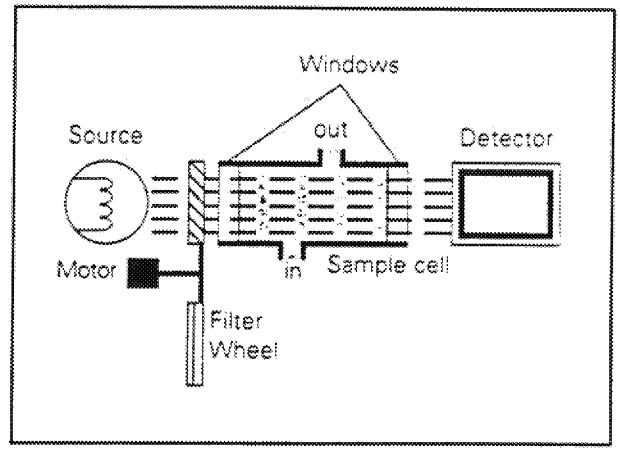

A single-beam, dual wavelength IR transducer (shown above) is offered for the analysis of gases other than CO_2 and for CO_2 in flammable and toxic samples. Common measurements with this transducer include CH_4, CO, solvents, and SF_6. The transducer has excellent long term stability and high rejection of common mode errors introduced by obscuration of the cell end windows.

The user may select a full scale range that fits his application.

Options offered with this bench are dual ranges and hard piping for flammable gas analysis.

TYPICAL APPLICATIONS

	O_2	CO_2	CO	CH_4	FREONS	SOLVENTS AND HYDROCARBONS	SF_6
Respiratory Physiology	●	●					
Exercise Machines	●	●					
Lung Function Research	●	●					
Diving Bells	●	●					
Decompression Chambers	●	●					
Agriculture/Horticulture	●	●		●			
Food/Plant Growing	●	●		●			
Green Houses	●	●					
Fruit Stores	●	●					
Mushroom Farms	●	●					
Animal Husbandry	●	●					
Off Gases in Silos/ Storage Chambers	●	●					
Food Industry	●	●					
Food Packaging	●	●					
Food Manufacture	●	●					
Fermentation Processes	●	●					
Others							
Synthetic Fibres						●	
Plastic Films						●	
Landfill Gas		●		●			
Ventilation Control	●	●					
Refrigeration					●		
Exhaust Emission Testing	●	●	●				
Heat Treatment		●	●	●			
Gas Manufacture/Mixing	●	●		●		●	
Pharmaceutical/ Fine Chemicals	●	●					
Bio-Engineering	●	●		●			
Switchgear Manufacture							●
Combustion Processes	●	●	●				
Research Laboratories	●	●	●	●	●	●	

SPECIFICATIONS Parameter	Conditions / Comments	PARAMAGNETIC O_2 FLS	O_2 STD	INFRARED CO_2 STD	SPX NonFlam,NonTox	Flam/Tox
Performance						
Measurement Principle		Magneto-dynamic	Paramagnetic	Single beam,single wavelength IR	Single beam, dual wavelength IR	
Repeatability	at the 1V output, constant conditions	±0.1% O_2			±1% FS	
Temperature Coefficient	for 10°C change within the specified ambient temperature range	±0.05% O_2	±0.3% reading	±1%FS ±3%reading	±2% FS	±4% reading
Response Time (90%)	a) inlet pressure & flow in specified range b) at point when flow alarm trips	typically less than 10 sec		approximately 50 sec	typically 30 sec	
Linearity	maximum error from best straight line	±0.1% O_2			±1% FS	
Effects of Atmospheric Pressure	a) direct vent to atmosphere b) nominal with back pressure regulation	directly proportional		0.15% reading per mbar (within specified range)		
Warm-up Time	typical at 20°C ambient temperature		0.02% reading/mbar	0.03% reading/mbar 1 hour		
Outputs						
Digital Reading	$3^1/_2$ digit green LED display + overrange	0.0 to 100.0% O_2		display resolution optimised for specified range		
1V Output		non-isolated, nominal o/p impedance 470 ohms			isolated o/p impedance < 1 ohm	
4-20mA (Isolated)		maximum load 600 ohms			maximum load 500 ohms	
Ranges		2 ranges from: 5, 10, 20, 25, 50, 100% User Configurable		1 range from: 1, 2, 5, 10, 25, 50, 100%	dual range (optional) Specified at time of order	
Alarms						
Flow Fail	change over relay contacts rated 1A/110VAC or 1A/28VDC non-inductive	none	dedicated SPCO relay		See below	none
Concentration Level	change over relay contacts rated 1A/110VAC or 1A/28VDC non-inductive	2 SPCO relays can be configured to high or low alarms, operating over the full scale of the unit			a 4-pole changeover relay configurable to one or more of: flow, concentration or instrument failure alarms	
Local Indication	red LED lamps flash when alarm active	individual concentration level & flow alarm indication				
Materials Exposed to Sample						
				stainless steel Viton/fluorocarbon rubber		
		platinum, nickel, borosilicate glass		sapphire epoxy resin	silicone rubber	CaF_2 or sapphire
		bonded glass fibre, nylon, neoprene, gold on silver, brass, monel, polypropylene, ruby, acetyl resin				
Additional with Back Pressure Option		copper, PVC, PVDF, berilium copper				

14/1/94

ED_002508A_00000338-00048

Parameter	Conditions / Comments	O_2 FLS	O_2 STD	CO_2 STD	SPX	SPX
Environmental						
Operating Ambient Temperature	a) Single or dual case b) Fitted into bench-top case		0-45°C (32-113°F) 0-40°C (32-104°F)		0-40°C (32-104°F) 0-35°C (32-95°F)	
Sensor / Transducer Temperature	nominal control temperature		50°C	60°C		
Storage Temperature			-20°C to +70°C (-4°F to 158°F)			
Relative Humidity			0-90% non-condensing		5 to 85% non-condensing	
AC Power Supply			88-264V 47-63Hz, 45VA max.		120 or 240VAC±10% 48 to 62Hz 30VA max	
EMC	Designed for compliance with:		EN 50022 (1987) CLASS A for conducted interference and radiated electric field			
Vibration			Protect from excessive vibration			
Sample Requirements						
Condition			Clean, dry gas with dew point at least 5°C below ambient temperature non-toxic, non-flammable			
Inlet Pressure / Flow Rate	Refer to flow schematics overleaf:	See schematic a	See schematics b & c		See schematic d	
Flammable Gases	ISA-S12.12 (1984) BS5345, Part 1 (1976)	groups B,C,D T3 group IIC, T3		Not Applicable Not Applicable		groups C and D, T4 groups IIA and IIB, T4
Filtering	SPX & FLS require external 0.6 micron filter		0.6 micron replaceable		0.6 micron	
Gas Connection	located at the rear of the unit	3.2mm(1/8")OD stub	6.4mm (1/4 inch) O.D. tube stub suitable for 1/4 inch compression fittings			
Physical Characteristics						
Case	a) Description b) Classification		Steel and aluminium, finished in epoxy powder paint IP20 (IEC 529) when fitted in the 19 inch rack case			
Overall Dimensions	a) Double case 4U b) Single case 4U c) Bench-top case d) Back pressure option		178mm high x 483mm wide x 380mm deep 182mm high x 256mm wide x 420mm deep 228mm high x 520mm wide x 400mm deep depth becomes 460mm approx.			
Weight	single unit double unit bench unit		5.5kg (12lb) typical 12kg (26lb) typical 20kg (44lb) typical			
Unit Identification	Rear panel serial no.	1421B NNN	1420B NNN	1415B NNN	1410B NNN	1411B NNN

The Company reserves the right to alter the specification without prior notice.

ED_002508A_00000338-00049

FLOW SCHEMATICS

(a) Sample Vent Direct to Atmosphere (FLS)

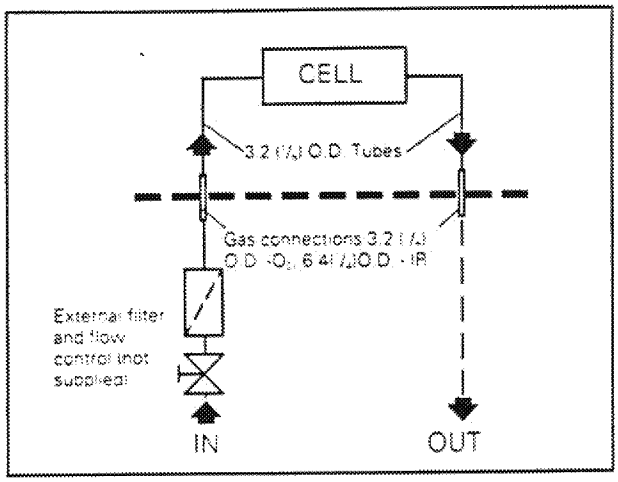

Flow:
User limited/controlled to 250ml min^{-1} max.
Flow Effect:
Less than 0.5% of O_2 reading change for flow change from 50 to 250 ml min^{-1}
Inlet pressure:
Typically 0.3kPag (3cmWG) at 200ml min^{-1}
Atmospheric pressure effect:
Oxygen reading is directly proportional to barometric pressure

(b) Sample Vent Direct to Atmosphere (STD)

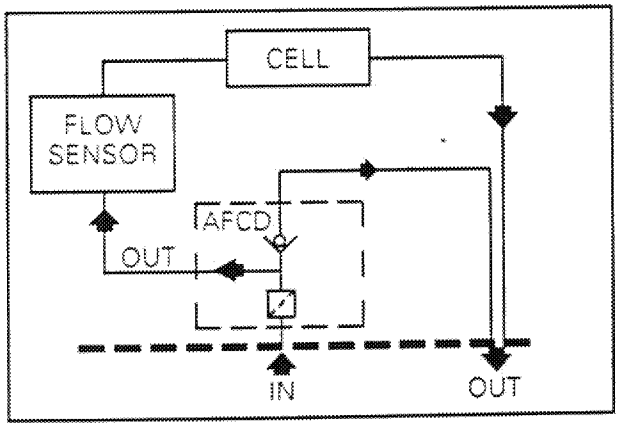

Flow:
Typically 1 to 6l min^{-1}, dependent upon inlet pressure
Inlet pressure:
7 to 70kPag (1 to 10psig)
Inlet pressure effects:
Pressure changes over the entire inlet pressure range will cause the reading to change by less than 0.2% O_2 or 1% of CO_2 reading
Barometric pressure effects:
O_2 reading is directly proportional to barometric pressure; CO_2 changes by 1.5% reading per kPa
Atmospheric (vent) pressure range:
CO_2 units 90 to 110kPaa(0.9 to 1.1 bara); O_2 units 80 to 110kPaa(0.8 to 1.1 bara)

(c) Sample Vent Via Back Pressure Regulator (STD)

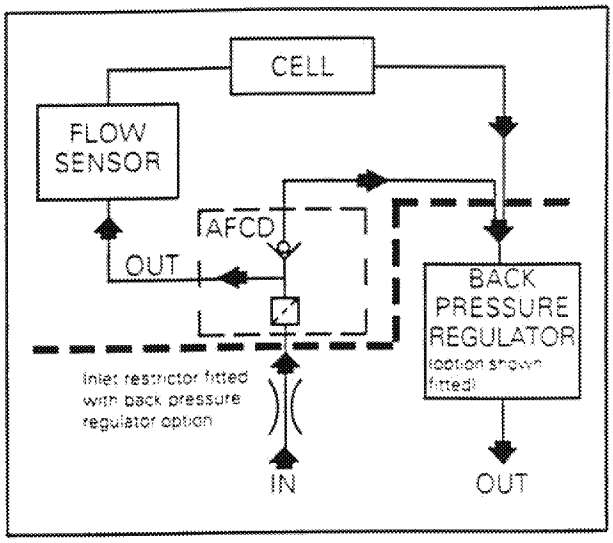

Inlet pressure:
Typically 120 to 140kPaa (to achieve inlet flow within the range 1 to 2 l min^{-1}
Flow effects:
Flow changes over the specified range will change the O_2 reading by less than 0.2%O_2 and the CO_2 by less than 1% of the CO_2 reading
Barometric pressure effects:
Reading changes by typically 0.25% of reading per kPa (0.025% of reading per mbar)
Atmospheric (vent) pressure:
108kPaa max.

(d) SPX Vent Direct to Atmosphere (SPX)

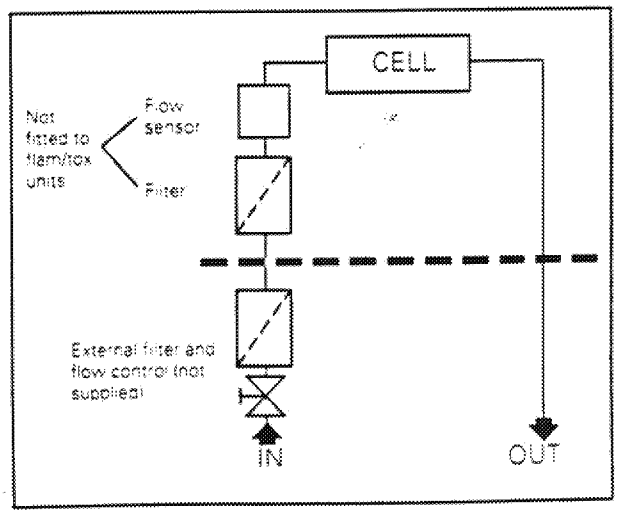

Flow:
User regulated within the range 0.1 to 1.0 lmin^{-1}
Atmospheric (vent) pressure:
90 to 110kPaa
Atmospheric pressure effect:
Approx. 1.5% reading per kPa

MOUNTING DETAILS

Double Unit Case

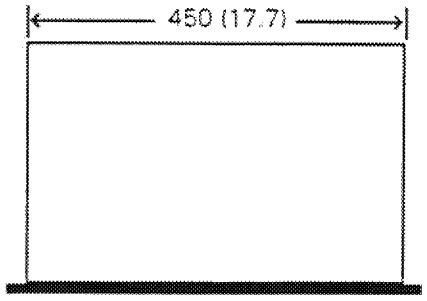

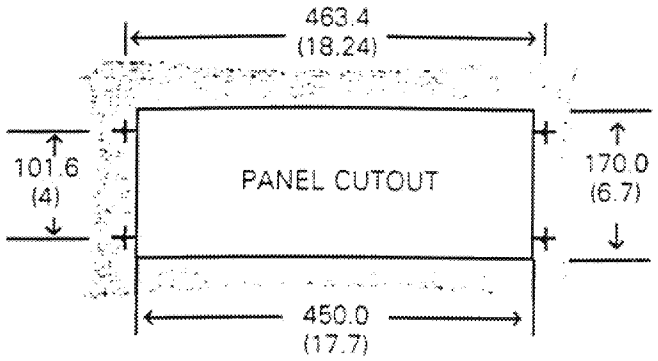

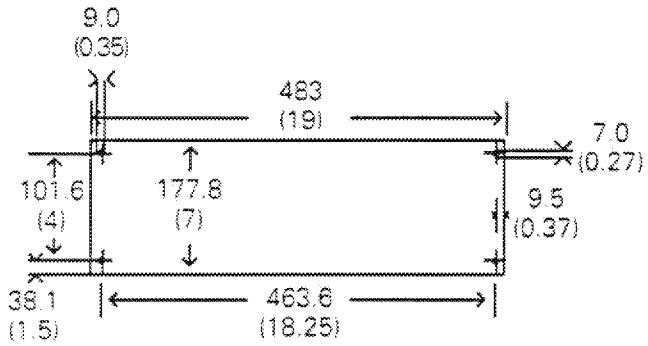

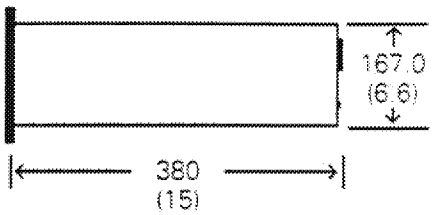

Single Unit Case (supplied with handles and rubber feet)

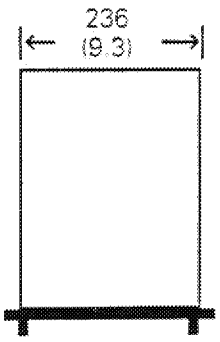

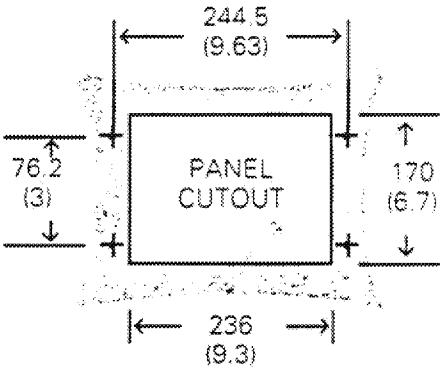

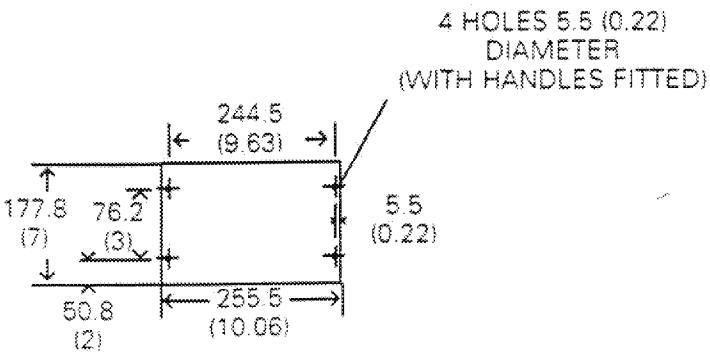

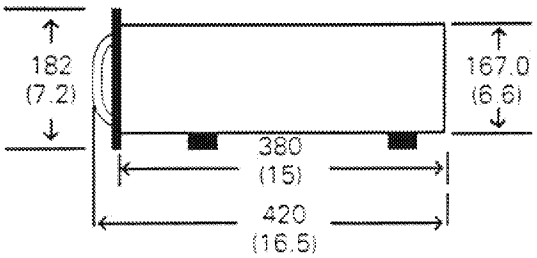

ALL DIMENSIONS IN mm/(inches)

1400 ORDERING CODE

Analyser 1400B4

Type Specification

		Standard STD	Flammable Sample FLS	Special Applications SPX
F1 Left hand unit	O_2 unit (standard)	10		
	O_2 unit (flammable)		11	
	CO_2 unit 1% FS	23		
	CO_2 unit 2% FS	24		
	CO_2 unit 5% FS	25		
	CO_2 unit 10% FS	26		
	CO_2 unit 25% FS	27		
	CO_2 unit 50% FS	28		
	CO_2 unit 100% FS	29		
	Special IR Non Flammable/Non Toxic Sample			91
	Special IR Flammable/Toxic Sample			92
	Blank panel	99	99	
F2 Right hand unit	Single unit	00	00	00
	O_2 unit (standard)	10		10
	O_2 unit (flammable)		11	11
	CO_2 unit 1% FS	23		
	CO_2 unit 2% FS	24		
	CO_2 unit 5% FS	25		
	CO_2 unit 10% FS	26		
	CO_2 unit 25% FS	27		
	CO_2 unit 50% FS	28		
	CO_2 unit 100% FS	29		
	Special IR Non Flammable/Non Toxic Sample			91
	Special IR Flammable/Toxic Sample			92
	Blank panel	99	99	99
F3 Back pressure regulator	None	0	0	0
	Left hand and single units	1		
	Right hand unit	2		
	Right and left hand units	3		
F4 Instrument case	Double unit case	1	1	1
	Single unit case	2	2	2
	Double bench-top case	3	3	3
F5 Manual (operator)	English	1	1	1
	French } Reserved	2	2	2
	German } Reserved	3	3	3
F6 Manual (service)	None	0	0	0
	English } Reserved	1	1	1
	French } Reserved	2	2	2
	German } Reserved	3	3	3
F7 Supply voltage	240 VAC ±10%, 48 to 62 Hz	-	-	1
	120 VAC ±10%, 48 to 62 Hz			2

	1400B4		F1	F2	F3	F4	F5	F6	F7
Example:	1400B4	STD	10	26	0	1	1	0	-

Notes: 1) SPX units must be approved by Servomex applications. Refer to Servomex for details of gases and ranges measurable with SPX units.
2) Flammable and non-flammable sample units may not be paired in the same SPX analyser.

Certificate No. _____ 92166
ISO 9001 (1987)

Servomex
LEADERS IN GAS ANALYSIS

Servomex plc, Jarvis Brook, Crowborough, East Sussex, TN6 3DU, England ☎ (44) 892 652181 Fax (44) 892 652253
Servomex Company, Inc., 90 Kerry Place, Norwood, MA 02062, USA ☎ (1) 617-769-7710 Fax (1) 617-769-2824
Servomex S.A.R.L., 8 Rue Proudhon, B.P. 50, 93212 La Plaine St Denis, France ☎ (33) 1-48 20 63 22 Fax (33) 1-48 20 62 99
Servomex B.V., PO Box 406, 2700 AK Zoetermeer, Stephensonstraat 20, 2723 RN Zoetermeer, Netherlands ☎ (31) 79-41 71 41 Fax (31) 79-42 08 19
Servomex Asia/Pacific Ltd, 5F-4, No. 328 Chang Chun Road, Taipei, Taiwan, R.O.C. ☎ (886) 2-718 0031 Fax (886) 2-712 0652
CNTIC-Servomex Technical Centre, No 2 Sheng Gu Zhuang, Chaoyang Area Beijing, China, PO Box 1432, Beijing, Post Code 100029 ☎ (86) 1-426-9911, 2101 Fax (86) 1-426-8694
Scottish Anglo Environmental Protection Ltd, Tees Offshore Base, Dockside Road, South Bank, Middlesbrough, Cleveland TS6 6UZ, England ☎ (44) 642 457771 Fax (44) 642 459183

© Servomex plc 1994 All rights reserved

7981 - 3485 1.94

APPENDIX I NOx Analyzer Manufacturer Specifications

Thermo Environmental Instruments Inc.

MODEL 42 H

CHEMILUMINESCENCE NO-NO_2-NO_x ANALYZER

For Continuous Source Gas Monitoring

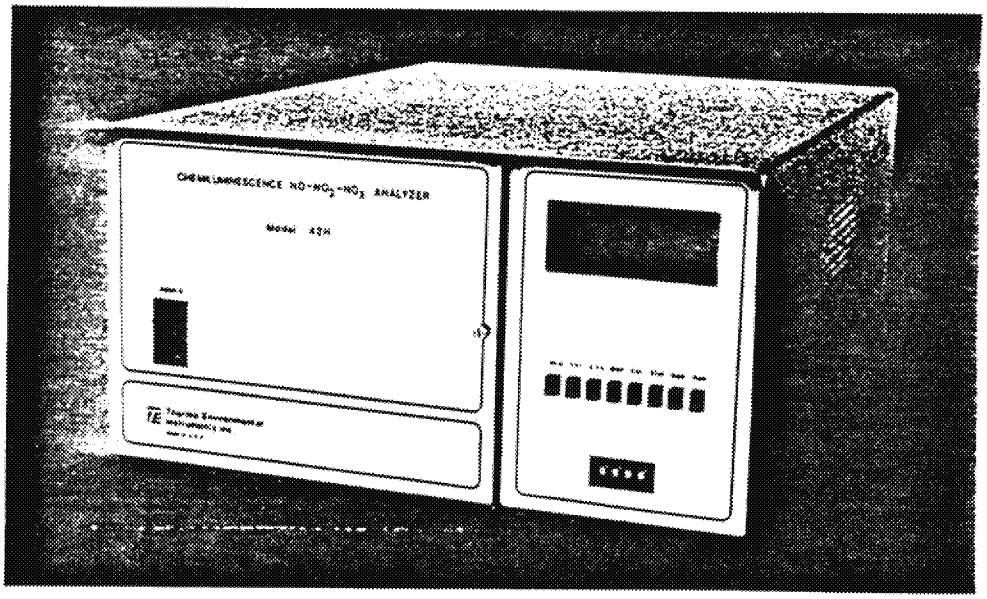

PERFORMANCE IS DESIGNED IN!

- MICROPROCESSOR BASED
- NINE (9) FIELD SELECTABLE RANGES
- CONTINUOUS OUTPUTS ON EACH CHANNEL
- EXTERNAL (OIL-LESS) VACUUM PUMP
- COMPACT SIZE
- PUSH BUTTON CALIBRATION
- USER FRIENDLY DIAGNOSTICS
- MANUAL AND AUTOMATIC MODES
- FRONT PANEL DISPLAY
- SELECTABLE TIME CONSTANTS

MODEL 42H NO-NO_2-NO_x ANALYZER

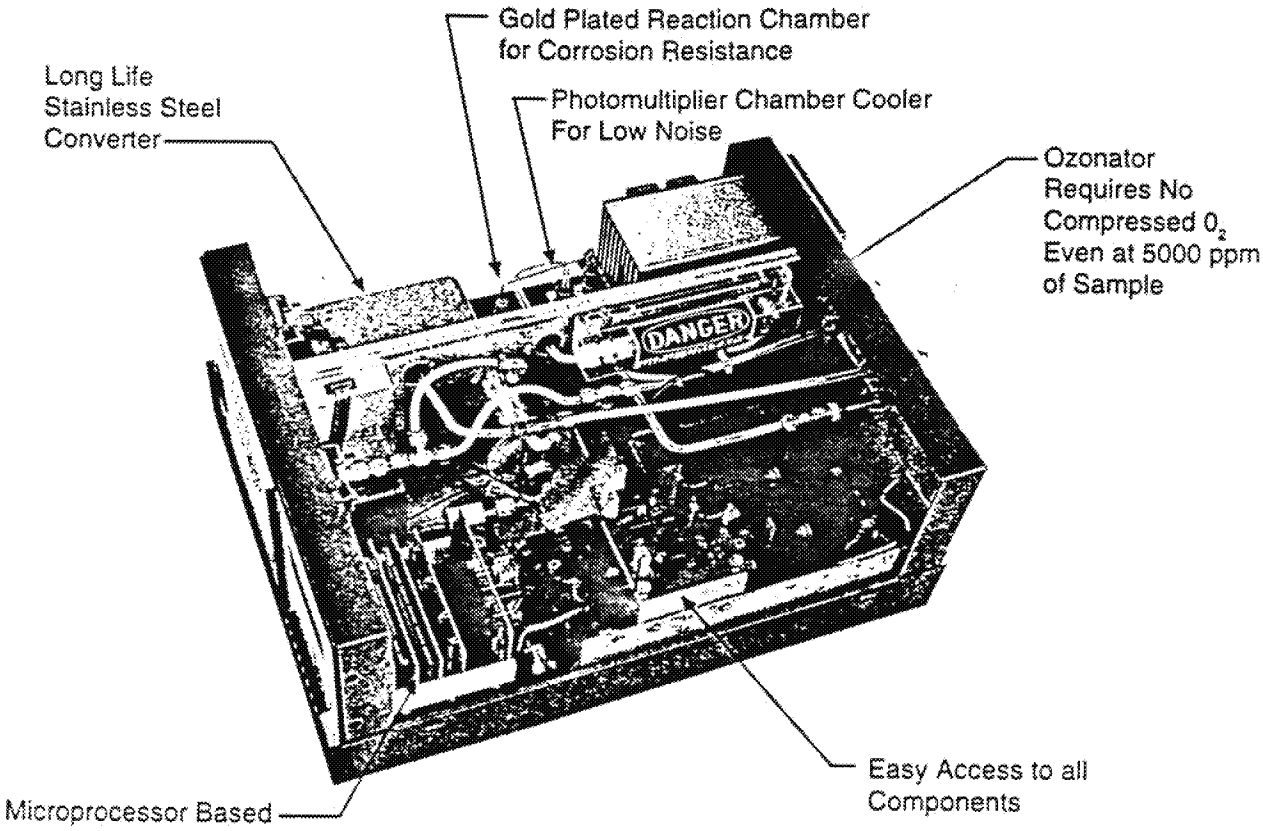

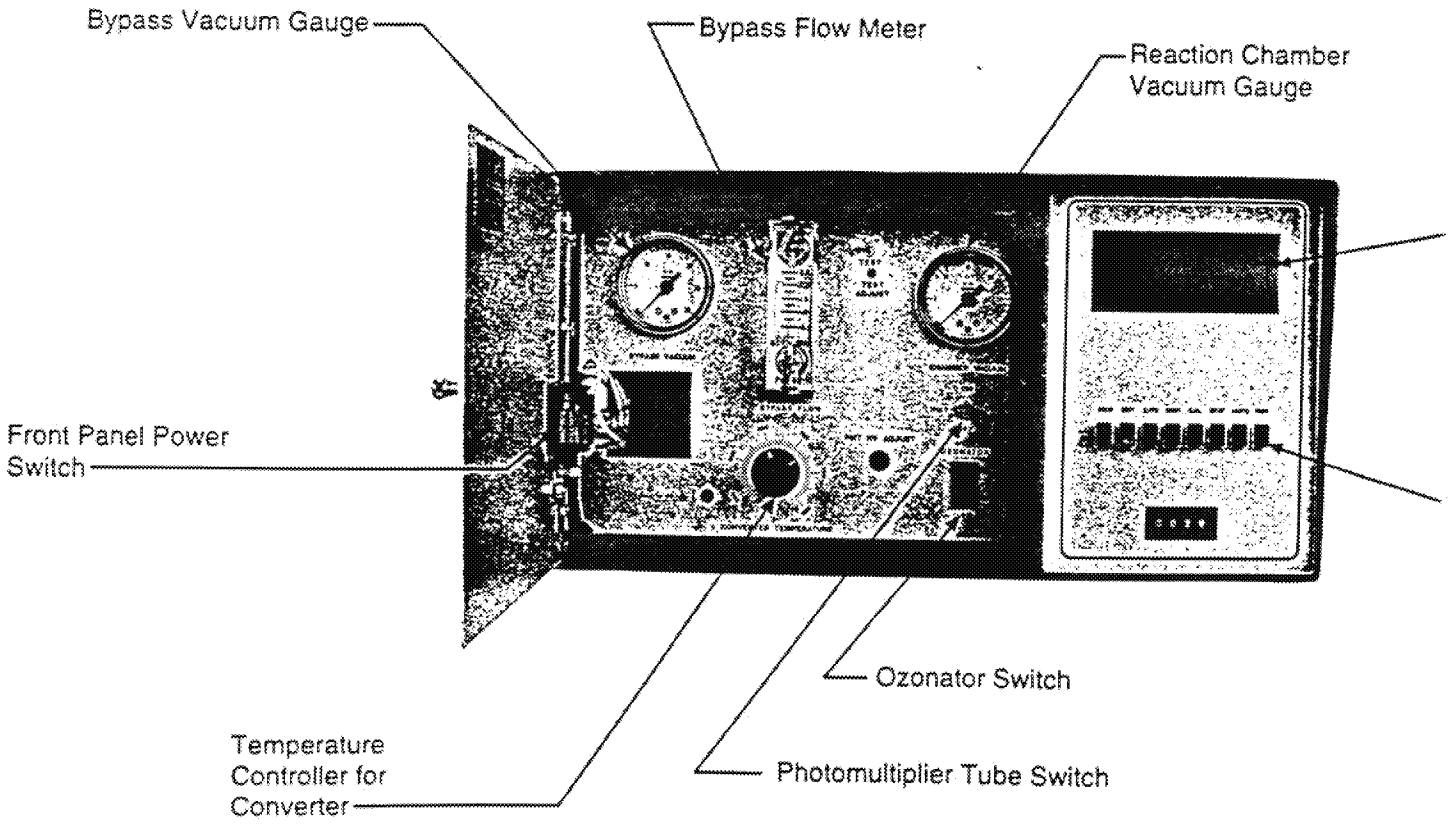

MODEL 42H SPECIFICATIONS

Ranges:	0-10, 20, 50, 100, 200, 500, 1000, 2000, 5000ppm
Noise:	25ppb
Detection Limit:	50ppb
Zero Drift (24-Hours):	50ppb
Span Drift (24-Hours)	±1% Full Scale
Rise Fall Times: (0-90%)	2.5 seconds NO Mode 5.0 seconds NO_x Mode
Linearity:	±1% Full Scale
Sample Flow Rate:	25 cc/min./with Bypass 2 SCFH
Vacuum:	28.5" Hg
Power Requirements:	500 watts. 115± 10 volts, 220± 20 volts, 50/60 Hz
Physical Dimensions:	17" (W) x 8¾" (H) X 23" (D)
Weight:	70 pounds, including pump
Outputs:	Selectable 0-10mv, 100mv, 1v, 5v, 10v, (optional) 4-20MA Isolated or RS-232

The Model 42H is Thermo Environmental Instruments' latest addition to its line of microprocessor based instrumentation. The Model 42H is a high level, fast response chemiluminescence instrument for N0, NO_2, and/or NO_x. Typical applications range from automotive exhaust analysis to source or stack measurements.

The Model 42H has full scale outputs from 10ppm to 5000ppm while using only dry air as the ozonator feed. Response times from 0.5 seconds to 300 seconds are available at the user's option.

A twin-headed diaphragm pump eliminates the need for oil changes typical of older analyzers. The unique two-piece reaction chamber construction offers ease in maintenance and service.

As always, Thermo Environmental Instruments is eager to offer assistance with its new Model 42H Chemiluminescence Analyzer. The Model 42H is expected to maintain TEI's position as the industry standard in high level NO_x measurements and applications.

— Easy to Read Display

— Push Button Calibration, Diagnostics, Ranges and More

OPTIONS

42-002 — Rack Mounts

42-004 — Regulated Bypass System

42-005 — 4-20MA Isolated Output

42-006 — Pressure Transducer

42-007 — Ozone Particulate Filter

42-008 — RS-232 Interface

42-009 — Permeation Dryer

MODEL 42H FLOW DIAGRAM

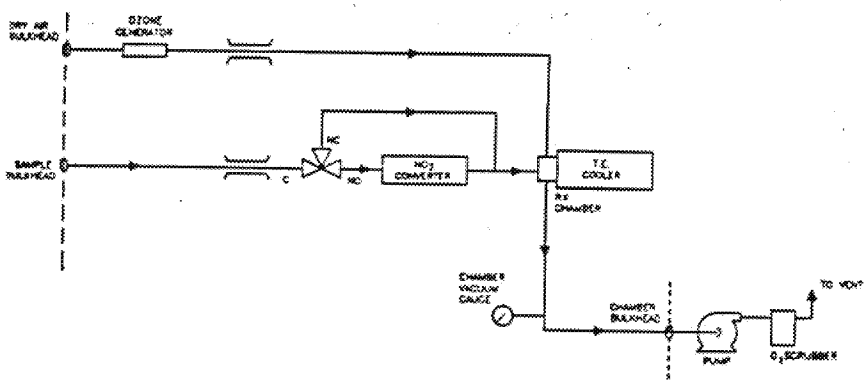

MODEL 42H: STANDARD CONFIGURATION

The Model 42H standard plumbing configuration is used in applications where ample amount of sample is present. The sample should be at a continuous stable flow. The analyzer is allowed to extract the sample as needed by use of a vented manifold system (atmospheric dump).

MODEL 42H: REGULATED BYPASS SYSTEM OPTION

The regulated bypass system is used when the sample must be transported over a long distance. It is also used when an unstable flow is being provided. The regulated bypass system provides make-up air thru the sample regulator in case of lack of sample to the reaction chamber. This unique feature avoids instrument drift due to pressure changes.

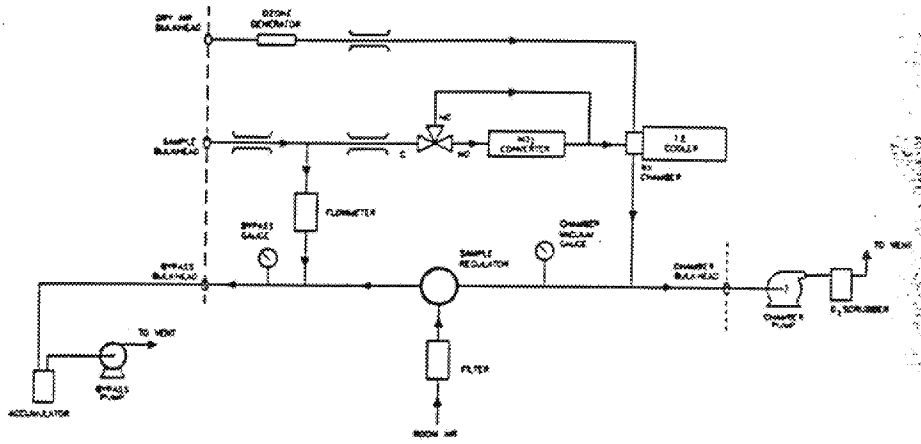

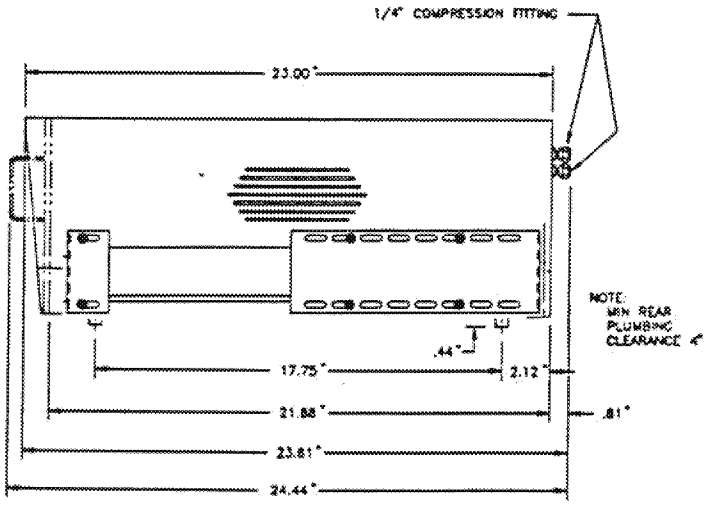

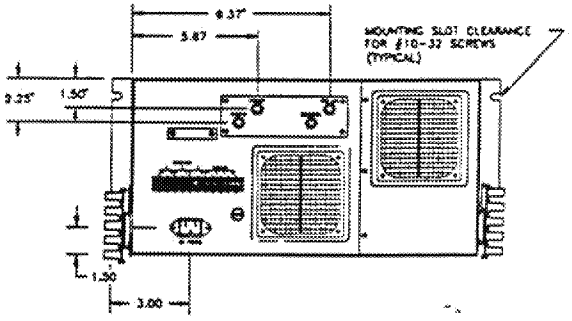

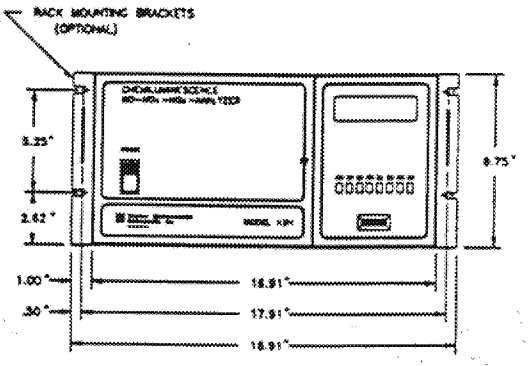

Installation Drawing - Including Rack Mount Slides (Optional)

Thermo Environmental Instruments Inc.

8 West Forge Parkway
Franklin, MA 02038

Tel: (508) 520-0430
Telex: 200205 THEMO UR

FAX: (508) 520-1460

Printed in the U.S.A. — 6/93 5M

ATTACHMENT

to

"CONTINUOUS EMISSIONS MONITORING PLAN"

"U. S. STEEL CLAIRTON WORKS
NOS. 1 AND 2 BOILERS
FUEL MONITORING STRATEGY"

PREPARED BY

U. S. STEEL CLAIRTON WORKS
CLAIRTON, PA
SEPTEMBER 30, 1994

INTRODUCTION

This report is submitted as an attachment to the Phase I Application submittal for the installation of NOx Continuous Emissions Monitors for the Nos. 1 and 2 Boiler stacks at U. S. Steel Clairton Works. It is the intent of this report to advice the Pennsylvania Department of Environmental Resources (PaDER) of our proposed fuel monitoring strategy for the various fuels burned or may potentially be burned.

IDENTIFICATION OF FUELS:

1. Clean Coke Oven Gas

   Clean (desulfurized) coke oven gas is the primary fuel burned on both subject boilers at Clairton Works. It's usage comprises approximately 99% of the total fuel burned on an annual basis on the boilers.

2. Natural Gas

   On an intermittent basis or under extreme adverse conditions natural gas is injected into the fuel stream fed to the boilers. This percentage of addition does not exceed 10% of the fuel gas flow at any given time.

3. Coal

   Previous conditions existed at both boilers where pulverized coal was the predominant or major source of fuel. This condition has since been modified where coal is only utilized as a fuel under adverse or emergency conditions.

4. Fuel Oil

   Under extreme adverse weather and conditions, Clairton Works and U. S. Steel have in the past been subjected to restrictions on usage of the previously mentioned fuels. As a safeguard against this measure Clairton Works would utilize fuel oils as a supplementary fuel fed to the boilers.

FUEL MONITORING STRATEGY

The Clairton Boilers use clean by-product coke oven gas as a primary fuel. Historically, over the past several years, coke oven gas has been used better than 99% of the time. There were some exceptions where natural gas was used as a supplemental fuel. The supplement typically was less then 10% of the fuel volume going to the boilers. These exceptions were due to unusual business or weather conditions.

The 1993-1994 recent severe winter under scored the necessity to have the flexibility of using alternate fuels. The sub-zero temperatures forced the Natural Gas Suppliers to consider curtailing gas supplies to the United States Steel Monongahela Valley steel making complex. If this scenario took place, the Clairton boilers would supplement with a liquid fuel or coal.

It is Clairton's intent to certify the NOx CEM with coke oven gas. However, we wish to maintain the flexibility to use alternate fuels so that if circumstances mandate use of an alternate fuel, we would not be in violation.

COKE OVEN GAS

The fuel factor for coke oven gas is calculated from a process gas chromatographic measurement of 13 coke oven gas components.

Hydrogen	Oxygen
Nitrogen	Methane
Carbon Monoxide	Carbon Dioxide
Ethylene	Ethane
Propylene	Propane
C 4 Hydrocarbons	Benzene
Hydrogen Sulfide	

The analysis is updated twice per hour. The chromatograph is calibrated daily with a certified gas standard.

Coke oven gas flow is measured across an orifice plate with a differential pressure transmitter. The 4 to 20 MA flow signal is transmitted to a continuous recorder and 24 hour integrator panel meter. The flow measurement output is also sent to the CEM process logic controller which uses the information to calculate NOx values. The system is calibrated semi-annually.

NATURAL GAS

The published F Factor for Natural Gas will be used.

Natural gas flow is measured across an orifice plate with a differential pressure transmitter. The 4 to 20 MA flow signal is transmitted to a continuous recorder and 24 hour integrator panel meter. The flow measurement output is also sent to the CEM process logic controller which uses the information to calculate NOx values. The system is calibrated semi-annually.

FUEL OIL

The published F factor for fuel will be used.

Fuel flow is measured by a positive displacement flow meter. The 4-20 MA flow signal is continuously recorded and sent to the CEM PLC for use in calculation of NOx values.

COAL

The published F factor for bitumerous coal will be used.

Coal samples will be stopped belt cross cut. Coal flow is measured by a Merrick weigh belt.

NOx.CEM
WCG/kb-94336

SPECIALIZED ENVIRONMENTAL SERVICES
607 Freedlander Road Wooster, Ohio 44691 (216)262-8877 Fax (216)262-7777

FAX COVER SHEET

Date:

To: JACK Withrow / JEFF FADDIS

Company:

Fax Phone Number: 412 233 1054

From: Cal Lowe

Message: SUPRISE, SUPRISE, SUPRISE

TOTAL NUMBER OF PAGES 4 *(INCLUDES COVER SHEET)*

If you do not receive this fax in its entirety, please call:

Allegheny County Health Department

COUNTY COMMISSIONERS

Tom Foerster
Chairman

Pete Flaherty

Larry Dunn

BOARD OF HEALTH

Roy L. Titchworth, M.D.
Chairman
Martin Krauss, O.D.
Vice Chairman

Robert Engel, Esq.
Susanne M. Gollin, Ph.D
Azizi Powell
Msgr. Charles Owen Rice
Frederick Ruben, M.D.
Anthony D. Stagno, Sr.

Bruce W. Dixon, M.D.
Director

BUREAU OF ENVIRONMENTAL QUALITY
DIVISION OF AIR QUALITY
301 39th Street
Pittsburgh, Pennsylvania 15201

September 21, 1994

Mr. Gary F. Platek
7-7, Inc.
607 Freedlander Road
Wooster OH 44691

PERMIT NO.: 94-I-0058-P
EQUIPMENT : USS Clairton Works
Peter's Creek Lagoon Remediation
LOCATION : Clairton, PA
ANNUAL OPERATING PERMIT FEE: $575

NOTICE OF INSTALLATION PERMIT APPROVAL

The subject installation permit has been conditionally approved for the installation of equipment associated with the remediation of the Peter's Creek Lagoon. The installation shall be made in conformity with the plans and specifications which are a part of your application. The installation must be inspected and approved by the Bureau before it is placed into operation (contact W. G. Gilson 578 8135).

The documents that are considered to be part of this installation permit include, but are not necessarily limited to, the following:

- ACHD, DAQ Form AP352 Process permit application, dated 8-3-94
- 7-7, Inc. Permit Submittal Package including: letter dated August 5, 1994
- 7-7, Inc. Fax dated 8-25-94 - A revision to the August 5, 1994 letter.

Additional conditions of approval are:

1. All equipment actually exposed to the lagoon contents (e.g. roll-off boxes, backhoe bucket, screens, etc.) shall be kept tarped when not in use for a period in excess of two hours.

2. Lagoon material shall not be transferred from container to container on the site.

3. All spillage shall be cleaned up promptly and kept placed in

closed containers until properly disposed of. Proper precautions shall be observed to prevent tracking of lagoon material off the site due to vehicular traffic.

4. The excavation rate shall not exceed any of the following:

10 Tons/hour
40 Tons/day
140 Tons/Week

5. The operating hours shall not exceed six(6) hours on any given day.

6. All excavation operations shall be performed between the hours of 7:00 am and 7:00 pm.

A complete operating permit application shall be submitted within sixty (60) days of achieving full production or one hundred twenty (120) days of start-up, whichever is earlier. When it is determined by the Bureau that the installation complies with all regulations, limitations, and approved installation permit conditions, an operating permit will be issued.

This installation permit shall be kept at the site during the construction period and be made available to Bureau personnel upon request.

Permit Issued by:

DIVISION OF AIR QUALITY

Roger C. Westman

Roger C. Westman
Engineering Section Head

FORM AP 352

ALLEGHENY COUNTY HEALTH DEPARTMENT
AIR POLLUTION CONTROL

PERMIT - PROCESS

APC USE ONLY	
Permit	94-I-1055-P
Check No.	5970
Receipt No.	8-3-94
Issued	
Expires	
Fee	$430.00
Basis	

COMPLETION DATE — DATE INSTALLED

INSTALLATION [X] 8/5/94 OPERATING [ ]

NAME	ADDRESS	BUSINESS
U.S. STEEL	400 STATE STREET CLAIRTON, PA 15025	TAR RECYCLING

OWNER	ADDRESS	PHONE
7-7, INC.	607 FREEDLANDER ROAD WOOSTER, OH 44691	(216)262-8877

INSTALLER OR CONTRACTOR	ADDRESS	PHONE
7-7, INC.	607 FREEDLANDER ROAD, WOOSTER, OH 44691	(216) 262-8877

AUTHORIZED REPRESENTATIVE	TITLE	SIGNATURE	PHONE
GARY F. PLATEK	DIRECTOR OF ENGINEERING	Gary F. Platek	(216)262-8877

PROCESS	YOUR IDENTIFICATION	PRODUCTION RATE [X] / CHARGING RATE [ ]	FEE
TAR EXCAVATION	5084	2 1/2-10 TONS/HR.	$ 430.00

OPERATING TIME	CONTINUOUS [ ] / BATCH [X]	BATCH TIME
4 HOURS/DAY 7 DAYS/WK. 52 WEEKS/YR.	1-2	HR. TOTAL

RAW MATERIALS: TAR MATERIALS CONTAINED IN LAGOON/ 100%/10-40 TONS/DAY

MATERIALS PRODUCED: TAR MATERIALS CONTAINED IN COVERED 20 YD. ROLL-OFF BOXES/100%/10-40 TONS/DAY

FUEL	AMT./HR.	BTU	% ASH	% SULFUR	FUEL	AMT./HR.	BTU	% ASH	% SULFUR
N/A									
FUEL	AMT./HR.	BTU	% ASH	% SULFUR	FUEL	AMT./HR.	BTU	% ASH	% SULFUR
N/A									

GAS CLEANER	GAS FLOW	INLET TEMP.	DUST LOADING	EFFICIENCY	PRESSURE DROP
N/A	SCFM	°F	GR./SCF.	%	"W.G.
GAS CLEANER	GAS FLOW	INLET TEMP.	DUST LOADING	EFFICIENCY	PRESSURE DROP
N/A	SCFM	°F	GR./SCF.	%	"W.G.

EMISSION ANALYSIS	PARTICULATE	SO_2	CO	NOx	HC	OTHER
POTENTIAL					0.61 LBS/HR	
FINAL					0.18 LBS/HR	

STACK HEIGHT	STACK AREA	EXHAUST FLOW	TEMPERATURE	DUST LOADING
N/A FT.	N/A SQ. FT.	N/A ACFM	AMBIENT °F	N/A GR./SCF.

EMISSION BASIS	MFG. DATA	EMISSION FACTORS	STACK TEST	COMPANY ESTIMATE	SUBMIT SUPPORTING DATA FOR METHOD USED.
	[ ]	[ ]	[ ]	[ ]	

NEAREST BUILDING:	HEIGHT	DISTANCE	COST OF EQUIPMENT	COST OF GAS CLEANING SYSTEM $
SEE1) AT 18	30 FT.	ABOUT 2000 FT.	$ 5,000.	N/A

DRAWING NO'S. AND TITLES: FIG. 1, REGIONAL LOCATION PLAN - 8/5/94, FIG. 2, LAGOON AREA 8/5/94

REMARKS

1) MUNICIPAL WASTE WATER TREATMENT BLDG.

2) SEE ATTACHED COMMENTS OF 8/5/94

REVIEWED BY	TITLE	DATE	REVIEWED BY	TITLE	DATE
[illegible]	[illegible]	9/20/94	[illegible]	[illegible]	9-21-94
REVIEWED BY	TITLE	DATE	PERMIT APPROVED BY	TITLE	DATE
			[illegible]	[illegible]	9-21-94

SE ONLY