APPENDIX B Specialty Gases Required

Daily Operation

* Oxygen zero gas	CO span gas, which contains 0% O2
* Oxygen span gas	22.0% Oxygen in Nitrogen base EPA Protocol 1
* NOx Zero Gas	0 ppm NOx, using Oxygen analyzer span gas
* NO_x Span Gas	400-450 ppm EPA Protocol 1

Note:

The span and zero gases may be "Certified Masters" for normal operation but must be "EPA Protocol I" for all audits (i.e. CGA).

CGA audit gases

• Oxygen mid range audit gas	5.0% Oxygen EPA Protocol 1
• Oxygen hi range audit gas	10.0% Oxygen EPA Protocol 1
• NO_x mid range audit gas	125 ppm NOx in Nitrogen base EPA Protocol 1
• NO_x hi range audit gas	275 ppm NOx in Nitrogen base EPA Protocol 1

Note:

These specified span and audit gases are desired values. The supplier attempts to meet the desired concentrations as best as possible using industry standard gas mixing methods.

The actual concentration of the gases are determined by measurement of the bottle contents and may vary slightly, as long as the concentration is within 80 to 90 percent of full scale for the chosen operating range of the analyzers.

Each piece of equipment permits the span gas concentration value to be set to the actual bottle concentration.

When received, each bottle of protocol gas will be labeled with the exact concentration. This equipment setting must be set to the actual bottle contents when the bottles are changed.

APPENDIX C Sample Reports

Sample Analyzer Performance Report.

INSTRUMENT UP/DOWN REPORT
PRINTED: 02-Jun-91 11:50
Enertec Industrial, Inc.
811 West 5th St.
NOx-1 lbs/hr
BEGINNING Apr. 1, 1991 AND ENDING Jun. 2, 1991

Date	CEM Outage Began	CEM Outage Ended	Total CEM downtime	Reason for Downtime	Corrective Action Taken
04/01	00:01	00:07	0:07	Calibration	Scheduled cal.
05/29	10:52	13:29	2:38	Monitor Down.	Replace battery.
05/29	13:33	13:34	0:02	Monitor Down.	Clean hoses.
05/29	13:43	16:54	3:12	Monitor Down.	Hardware failure.
05/30	08:52	09:02	0:11	Monitor Down.	none at this time.
05/30	11:25	13:27	2:03	DAS Down.	Preventive Maintenance.
05/30	13:31	13:31	0:01	Monitor Down.	Call service.
05/30	14:10	14:10	0:01	Monitor Down.	none at this time.
06/01	12:05	12:08	0:04	Monitor Down.	Call service
06/01	12:10	12:10	0:01	Monitor Down.	none at this time.

Daily CO report

ACEMS Pollution Monitor Daily Report V4.1 01/12/1993 Page # 1
Company: ABC CORP. Location : Somewhere, USA
Source : Boiler Pollutant: CO Units: ppm

00:00	19.0	19.0	19.0	20.0	19.0	19.0	21.0	22.0	19.0	18.0		
00:10	19.0	20.0	20.0	20.0	20.0	22.0	20.0	20.0	26.0	44.0		
00:20	50.0	29.0	34.0	46.0	47.0	65.0	60.0	55.0	79.0	81.0		
00:30	85.0	88.0	64.0	46.0	25.0	22.0	22.0	21.0	21.0	22.0		
00:40	21.0	23.0	24.0	35.0	26.0	24.0	24.0	24.0	26.0	26.0		
00:50	28.0	27.0	25.0	28.0	26.0	24.0	31.0	56.0	29.0	25.0	Avg:	32.3 60
01:00	25.0	26.0	28.0	31.0	28.0	47.0	31.0	26.0	26.0	26.0		
01:10	25.0	25.0	26.0	25.0	27.0	27.0	27.0	26.0	27.0	38.0		
01:20	29.0	26.0	27.0	28.0	35.0	30.0	26.0	26.0	28.0	37.0		
01:30	34.0	28.0	28.0	27.0	26.0	26.0	30.0	28.0	25.0	27.0		
01:40	27.0	25.0	24.0	24.0	23.0	23.0	25.0	26.0	41.0	27.0		
01:50	25.0	27.0	28.0	26.0	25.0	25.0	30.0	34.0	28.0	25.0	Avg:	27.9 60
02:00	24.0	25.0	31.0	24.0	24.0	24.0	27.0	28.0	25.0	24.0		
02:10	25.0	30.0	31.0	31.0	27.0	34.0	27.0	31.0	33.0	29.0		
02:20	30.0	32.0	30.0	28.0	28.0	31.0	33.0	32.0	33.0	32.0		
02:30	32.0	31.0	31.0	32.0	34.0	36.0	34.0	34.0	39.0	35.0		
02:40	37.0	33.0	31.0	29.0	34.0	45.0	39.0	35.0	31.0	31.0		
02:50	36.0	40.0	39.0	42.0	51.0	41.0	40.0	44.0	44.0	41.0	Avg:	32.6 60
03:00	45.0	43.0	51.0	80.0	75.0	57.0	55.0	47.0	46.0	51.0		
03:10	53.0	56.0	52.0	48.0	52.0	52.0	56.0	57.0	56.0	60.0		
03:20	58.0	55.0	78.0	71.0	67.0	66.0	57.0	74.0	69.0	69.0		
03:30	63.0	60.0	53.0	62.0	56.0	52.0	65.0	53.0	84.0	157.0		
03:40	69.0	68.0	53.0	55.0	48.0	59.0	70.0	59.0	47.0	52.0		
03:50	51.0	46.0	52.0	49.0	49.0	49.0	51.0	60.0	81.0	82.0	Avg:	60.3 60
04:00	58.0	87.0	89.0	53.0	62.0	82.0	94.0	100.0	122.0	61.0		
04:10	42.0	39.0	40.0	41.0	39.0	47.0	41.0	38.0	36.0	40.0		
04:20	40.0	46.0	70.0	47.0	42.0	42.0	41.0	37.0	45.0	40.0		
04:30	37.0	37.0	41.0	37.0	34.0	34.0	34.0	35.0	34.0	34.0		
04:40	49.0	35.0	31.0	43.0	36.0	32.0	31.0	31.0	32.0	32.0		
04:50	35.0	31.0	47.0	36.0	36.0	39.0	62.0	28.0	26.0	28.0	Avg:	45.6 60
05:00	28.0IC	68.0IC	2.0IC	0.0ZC	171.0IC	188.0SC	101.0IC	2.0IC	0.0ZC	2607.0IC		
05:10	2829.0SC	2828.0SC	93.0IC	49.0IC	32.0	31.0	31.0	29.0	28.0	59.0		
05:20	94.0	37.0	34.0	27.0	25.0	26.0	35.0	30.0	26.0	25.0		
05:30	24.0	24.0	26.0	27.0	29.0	35.0	25.0	26.0	26.0	38.0		
05:40	65.0	76.0	73.0	56.0	49.0	53.0	53.0	51.0	51.0	52.0		
05:50	58.0	57.0	56.0	57.0	48.0	29.0	30.0	33.0	36.0	33.0	Avg:	40.5 46
06:00	31.0	34.0	35.0	36.0	38.0	38.0	36.0	44.0	174.0	43.0		
06:10	37.0	34.0	35.0	40.0	36.0	35.0	36.0	36.0	37.0	33.0		
06:20	36.0	39.0	40.0	38.0	37.0	39.0	41.0	45.0	39.0	41.0		
06:30	40.0	36.0	39.0	44.0	40.0	43.0	41.0	39.0	50.0	41.0		
06:40	40.0	39.0	38.0	51.0	54.0	40.0	46.0	48.0	47.0	44.0		
06:50	45.0	48.0	43.0	44.0	42.0	56.0	64.0	46.0	43.0	42.0	Avg:	43.3 60

ACEMS Pollution Monitor Daily Report V4.1 01/12/1993 Page # 2
Company: ABC CORP. Location : Somewhere, USA
Source : Boiler Pollutant: CO Units: ppm

07:00	48.0	50.0	44.0	46.0	50.0	45.0	57.0	49.0	48.0	45.0		
07:10	66.0	89.0	41.0	37.0	42.0	41.0	43.0	39.0	43.0	44.0		
07:20	38.0	40.0	40.0	36.0	37.0	41.0	63.0	46.0	117.0	42.0		
07:30	32.0	33.0	35.0	34.0	34.0	40.0	32.0	29.0	30.0	33.0		
07:40	27.0	26.0	29.0	32.0	29.0	28.0	30.0	29.0	29.0	28.0		
07:50	32.0	26.0	25.0	25.0	30.0	28.0	27.0	28.0	26.0	28.0	Avg:	39.3 60
08:00	33.0	27.0	28.0	25.0	24.0	25.0	27.0	28.0	31.0	48.0		
08:10	40.0	37.0	33.0	118.0	62.0	28.0	25.0	27.0	35.0	37.0		
08:20	27.0	26.0	28.0	23.0	24.0	29.0	27.0	23.0	24.0	29.0		
08:30	30.0	25.0	25.0	25.0	26.0	28.0	28.0	24.0	24.0	23.0		
08:40	24.0	22.0	20.0	21.0	32.0	37.0	24.0	22.0	20.0	28.0		
08:50	22.0	22.0	26.0	31.0	26.0	27.0	24.0	24.0	31.0	22.0	Avg:	29.4 60
09:00	22.0	25.0	29.0	37.0	23.0	23.0	25.0	22.0	23.0	27.0		
09:10	22.0	23.0	24.0	31.0	27.0	27.0	28.0	27.0	23.0	25.0		
09:20	25.0	26.0	31.0	29.0	24.0	25.0	29.0	27.0	25.0	24.0		
09:30	28.0	27.0	26.0	24.0	25.0	24.0	23.0	24.0	29.0	26.0		
09:40	24.0	23.0	25.0	24.0	26.0	21.0	18.0	25.0	33.0	27.0		
09:50	23.0	33.0	27.0	26.0	30.0	30.0	23.0	22.0	23.0	25.0	Avg:	25.7 60
10:00	24.0	33.0	34.0	24.0	26.0	27.0	27.0	24.0	23.0	23.0		
10:10	25.0	24.0	26.0	28.0	33.0	35.0	39.0	37.0	37.0	45.0		
10:20	61.0	39.0	36.0	29.0	25.0	27.0	29.0	34.0	25.0	25.0		
10:30	24.0	26.0	33.0	31.0	31.0	35.0	28.0	28.0	25.0	27.0		
10:40	28.0	30.0	33.0	39.0	52.0	28.0	33.0	33.0	30.0	35.0		
10:50	34.0	32.0	35.0	32.0	30.0	38.0	38.0	34.0	34.0	32.0	Avg:	31.5 60
11:00	40.0	39.0	47.0	29.0	35.0	36.0	32.0	34.0	33.0	37.0		
11:10	43.0	41.0	31.0	32.0	32.0	33.0	36.0	38.0	34.0	71.0		
11:20	58.0	36.0	43.0	40.0	37.0	36.0	37.0	36.0	42.0	36.0		
11:30	37.0	35.0	33.0	32.0	35.0	50.0	99.0	43.0	39.0	39.0		
11:40	36.0	38.0	36.0	38.0	45.0	38.0	40.0	40.0	44.0	45.0		
11:50	63.0	52.0	57.0	51.0	51.0	41.0	36.0	39.0	43.0	43.0	Avg:	41.1 60
12:00	38.0	37.0	38.0	39.0	48.0	47.0	41.0	43.0	45.0	42.0		
12:10	57.0	69.0	40.0	50.0	48.0	38.0	47.0	54.0	39.0	38.0		
12:20	41.0	38.0	38.0	38.0	32.0	32.0	31.0	43.0	40.0	35.0		
12:30	32.0	29.0	27.0	35.0	32.0	33.0	34.0	28.0	28.0	33.0		
12:40	28.0	26.0	31.0	27.0	31.0	27.0	27.0	29.0	27.0	26.0		
12:50	26.0	27.0	26.0	25.0	31.0	26.0	26.0	27.0	27.0	29.0	Avg:	35.4 60
13:00	30.0	29.0	46.0	30.0	28.0	29.0	28.0	39.0	31.0	30.0		
13:10	30.0	27.0	26.0	27.0	26.0	26.0	32.0	25.0	31.0	27.0		
13:20	26.0	27.0	28.0	38.0	29.0	30.0	31.0	26.0	25.0	32.0		
13:30	27.0	32.0	25.0	34.0	27.0	40.0	42.0	42.0	52.0	33.0		
13:40	27.0	32.0	28.0	29.0	40.0	44.0	44.0	49.0	51.0	48.0		
13:50	39.0	30.0	22.0	28.0	41.0	44.0	46.0	36.0	27.0	24.0	Avg:	32.9 60

ACEMS Pollution Monitor Daily Report V4.1 01/12/1993 Page # 3
Company: ABC CORP. Location : Somewhere, USA
Source : Boiler Pollutant: CO Units: ppm

14:00	26.0	34.0	35.0	33.0	22.0	21.0	21.0	23.0	29.0	23.0		
14:10	21.0	21.0	21.0	24.0	23.0	21.0	21.0	20.0	24.0	23.0		
14:20	23.0	22.0	22.0	21.0	21.0	21.0	20.0	23.0	21.0	37.0		
14:30	26.0	22.0	23.0	23.0	23.0	23.0	23.0	25.0	23.0	22.0		
14:40	25.0	25.0	26.0	28.0	27.0	27.0	26.0	26.0	31.0	30.0		
14:50	27.0	28.0	119.0	75.0	51.0	26.0	27.0	28.0	37.0	30.0	Avg:	27.8 60
15:00	30.0	30.0	29.0	30.0	34.0	36.0	41.0	39.0	33.0	36.0		
15:10	45.0	42.0	40.0	38.0	37.0	37.0	54.0	37.0	37.0	36.0		
15:20	37.0	39.0	45.0	64.0	34.0	35.0	38.0	39.0	54.0	44.0		
15:30	42.0	46.0	58.0	68.0	52.0	54.0	53.0	47.0	60.0	63.0		
15:40	52.0	48.0	48.0	43.0	45.0	49.0	45.0	41.0	39.0	38.0		
15:50	34.0	39.0	42.0	41.0	45.0	74.0	61.0	49.0	62.0	47.0	Avg:	44.2 60
16:00	57.0	47.0	47.0	54.0	45.0	60.0	56.0	51.0	47.0	39.0		
16:10	38.0	43.0	42.0	33.0	31.0	61.0	48.0	38.0	34.0	35.0		
16:20	31.0	31.0	27.0	59.0	42.0	31.0	30.0	30.0	27.0	34.0		
16:30	36.0	31.0	30.0	28.0	31.0	33.0	37.0	30.0	28.0	29.0		
16:40	28.0	28.0	31.0	30.0	29.0	28.0	29.0	30.0	24.0	23.0		
16:50	24.0	25.0	28.0	30.0	26.0	22.0	22.0	22.0	26.0	24.0	Avg:	34.8 60
17:00	23.0	23.0	24.0	25.0	23.0	31.0	32.0	31.0	30.0	27.0		
17:10	25.0	23.0	22.0	22.0	22.0	22.0	39.0	51.0	40.0	40.0		
17:20	28.0	22.0	35.0	41.0	45.0	33.0	42.0	46.0	48.0	39.0		
17:30	28.0	27.0	27.0	33.0	26.0	22.0	22.0	21.0	21.0	22.0		
17:40	22.0	22.0	22.0	26.0	29.0	28.0	24.0	23.0	31.0	29.0		
17:50	30.0	30.0	27.0	27.0	27.0	28.0	27.0	29.0	29.0	30.0	Avg:	29.0 60
18:00	33.0	33.0	32.0	30.0	34.0	34.0	38.0	39.0	35.0	30.0		
18:10	30.0	38.0	36.0	32.0	47.0	35.0	34.0	36.0	32.0	31.0		
18:20	33.0	32.0	35.0	53.0	35.0	35.0	35.0	34.0	36.0	35.0		
18:30	37.0	45.0	43.0	42.0	40.0	40.0	35.0	39.0	41.0	38.0		
18:40	37.0	39.0	56.0	46.0	45.0	37.0	35.0	39.0	37.0	46.0		
18:50	37.0	34.0	32.0	45.0	38.0	38.0	44.0	33.0	115.0	43.0	Avg:	38.8 60
19:00	34.0	34.0	33.0	35.0	36.0	35.0	39.0	47.0	53.0	36.0		
19:10	31.0	32.0	34.0	36.0	38.0	39.0	43.0	35.0	35.0	38.0		
19:20	41.0	44.0	42.0	44.0	48.0	41.0	53.0	48.0	37.0	34.0		
19:30	43.0	41.0	56.0	45.0	46.0	39.0	37.0	37.0	37.0	77.0		
19:40	43.0	32.0	29.0	32.0	40.0	43.0	33.0	38.0	41.0	32.0		
19:50	34.0	36.0	32.0	35.0	32.0	30.0	32.0	32.0	36.0	34.0	Avg:	38.8 60
20:00	30.0	31.0	31.0	33.0	31.0	33.0	29.0	29.0	32.0	30.0		
20:10	28.0	29.0	29.0	43.0	27.0	33.0	26.0	25.0	23.0	23.0		
20:20	25.0	25.0	25.0	26.0	36.0	28.0	23.0	23.0	25.0	25.0		
20:30	27.0	32.0	25.0	24.0	25.0	24.0	23.0	33.0	25.0	25.0		
20:40	23.0	23.0	24.0	27.0	24.0	23.0	23.0	22.0	23.0	23.0		
20:50	22.0	22.0	22.0	23.0	26.0	67.0	37.0	30.0	23.0	26.0	Avg:	27.5 60

ACEMS Pollution Monitor Daily Report V4.1 01/12/1993 Page # 4
Company: ABC CORP. Location : Somewhere, USA
Source : Boiler Pollutant: CO Units: ppm

21:00	28.0	24.0	21.0	23.0	26.0	24.0	28.0	40.0	26.0	23.0		
21:10	24.0	23.0	23.0	25.0	23.0	22.0	24.0	23.0	23.0	21.0		
21:20	21.0	22.0	40.0	49.0	44.0	55.0	57.0	43.0	25.0	26.0		
21:30	39.0	48.0	48.0	35.0	22.0	25.0	37.0	40.0	43.0	46.0		
21:40	25.0	20.0	21.0	25.0	23.0	24.0	28.0	37.0	36.0	39.0		
21:50	35.0	45.0	60.0	31.0	29.0	31.0	26.0	23.0	23.0	23.0	Avg:	31.0 60
22:00	22.0	23.0	22.0	22.0	24.0	24.0	24.0	24.0	31.0	57.0		
22:10	29.0	22.0	29.0	24.0	30.0	23.0	24.0	25.0	28.0	24.0		
22:20	24.0	25.0	26.0	33.0	24.0	24.0	27.0	24.0	26.0	24.0		
22:30	24.0	52.0	37.0	23.0	23.0	23.0	25.0	28.0	29.0	24.0		
22:40	23.0	26.0	30.0	35.0	30.0	26.0	24.0	24.0	27.0	31.0		
22:50	27.0	24.0	40.0	31.0	25.0	27.0	26.0	24.0	26.0	27.0	Avg:	27.1 60
23:00	28.0	25.0	25.0	22.0	30.0	32.0	33.0	29.0	23.0	24.0		
23:10	29.0	31.0	34.0	30.0	37.0	28.0	34.0	32.0	28.0	35.0		
23:20	31.0	28.0	26.0	25.0	29.0	37.0	38.0	45.0	31.0	25.0		
23:30	32.0	51.0	46.0	34.0	38.0	36.0	37.0	40.0	35.0	29.0		
23:40	34.0	40.0	43.0	41.0	31.0	35.0	36.0	31.0	30.0	37.0		
23:50	34.0	37.0	38.0	39.0	49.0	55.0	46.0	43.0	50.0	45.0	Avg:	34.6 60

Daily Average: 35.4 Count: 1426

Calibration Codes	Status Codes
IC - In calibration	CD - CEMSPEAK data error
SC - Span Calibration PASS	CT - CEMSPEAK task error
MC - Midrange Calibration PASS	DE - Data error
ZC - Zero Calibration PASS	HW - Hardware fault
CF - Calibration Fail	IG - Ignore Data
SF - Span Calibration Fail	LF - Communication Link Failure
MF - Midrange Calibration Fail	ND - No Data
ZF - Zero Calibration Fail	OD - Old Data
	DN - Process Down

End of Daily Report.

Daily O2 report

ACEMS Pollution Monitor Daily Report V4.1 01/12/1993 Page # 1
Company: Some company Location : Yourtown, Yourstate
Source : Boiler Pollutant: O2 Units: %

00:00	8.5	8.4	8.6	8.7	8.8	8.8	8.5	8.0	8.4	8.7		
00:10	8.8	8.8	8.9	8.8	8.8	8.4	8.5	8.6	9.2	9.7		
00:20	9.6	8.8	9.3	9.8	10.0	8.6	8.1	9.6	10.4	10.6		
00:30	10.7	10.6	10.1	9.3	8.4	8.5	8.5	8.4	8.5	8.5		
00:40	8.5	8.6	8.4	7.2	7.9	8.3	8.3	8.2	8.1	8.0		
00:50	8.0	8.0	8.0	7.9	7.7	8.0	7.6	5.3	7.4	8.1	Avg:	8.6
60												
01:00	8.3	8.5	8.3	8.2	8.3	8.6	7.4	8.1	8.1	8.3		
01:10	8.2	8.3	8.3	8.2	8.2	8.0	8.0	8.1	8.0	7.4		
01:20	8.1	8.4	8.3	8.2	7.3	8.3	8.4	8.2	8.1	7.7		
01:30	7.8	8.2	8.0	8.0	8.2	8.2	8.0	8.2	8.3	8.2		
01:40	8.0	8.1	8.1	8.0	8.1	8.2	7.9	8.0	7.1	7.9		
01:50	8.1	8.0	8.0	8.1	8.1	8.1	7.9	7.4	8.0	8.2	Avg:	8.0
60												
02:00	8.1	8.1	7.7	8.0	8.0	8.0	7.9	7.8	8.1	8.0		
02:10	8.0	8.0	8.1	8.0	8.0	8.4	8.3	8.2	7.8	8.2		
02:20	8.0	7.8	8.3	8.3	8.2	8.4	8.2	8.1	8.2	8.1		
02:30	8.2	8.0	8.0	8.1	7.9	8.0	8.1	8.1	8.0	8.0		
02:40	7.8	8.0	8.0	8.0	8.0	7.5	7.8	7.7	7.7	7.7		
02:50	7.6	7.7	7.8	7.7	7.4	7.7	7.7	7.7	7.6	7.6	Avg:	8.0
60												
03:00	7.8	7.7	7.5	6.9	7.1	7.9	7.8	8.1	8.2	8.3		
03:10	8.3	8.2	8.0	7.9	7.9	8.0	7.9	7.9	7.9	7.7		
03:20	7.8	7.9	7.6	7.8	7.7	7.8	7.8	7.6	7.6	7.5		
03:30	7.5	7.7	7.8	7.8	7.7	7.7	7.7	7.6	7.5	5.7		
03:40	6.8	6.7	7.9	7.8	8.1	8.0	7.8	7.7	7.9	7.9		
03:50	7.6	7.9	7.5	7.8	8.0	7.7	7.6	8.1	8.5	8.5	Avg:	7.7
60												
04:00	8.1	8.7	8.7	8.3	9.0	9.3	9.2	9.5	9.9	8.3		
04:10	8.0	8.0	8.1	8.0	8.1	7.5	8.1	8.2	8.2	8.1		
04:20	8.0	8.0	6.5	7.1	8.0	8.0	8.1	8.2	7.6	7.9		
04:30	8.1	8.2	8.0	7.9	7.9	7.9	8.0	7.9	7.9	7.9		
04:40	7.0	7.9	8.4	7.7	7.9	8.6	8.7	8.5	8.4	8.3		
04:50	8.3	8.3	7.3	7.4	7.7	7.2	6.0	8.4	8.8	8.8	Avg:	8.1
60												
05:00	8.6IC	15.4IC	21.1IC	19.7IC	1.5IC	0.0ZC	0.0ZC	21.0IC	21.1SC	1.2IC		
05:10	0.0IC	3.1IC	7.2IC	7.3IC	8.0	7.9	7.9	7.7	7.8	6.2		
05:20	4.8	6.9	7.0	8.0	8.5	8.5	7.9	7.9	8.7	9.6		
05:30	8.5	8.4	8.2	8.3	8.1	7.4	8.2	8.2	8.2	9.4		
05:40	10.3	10.3	9.6	9.4	9.8	9.8	9.9	9.9	9.8	9.8		
05:50	9.4	9.9	9.9	9.9	9.5	8.3	8.3	8.3	8.2	8.2	Avg:	8.6
46												
06:00	8.3	8.3	8.2	8.4	8.3	8.2	8.3	8.1	4.9	6.4		
06:10	7.3	7.8	8.3	8.1	8.8	9.0	8.8	8.6	8.6	8.6		
06:20	8.6	8.3	8.1	8.4	8.3	8.2	8.3	7.6	7.8	8.2		
06:30	8.2	8.1	7.9	7.6	8.0	8.1	7.6	7.5	7.3	8.0		
06:40	8.1	8.0	7.9	7.7	7.3	8.0	7.7	7.6	7.9	8.0		
06:50	7.9	7.4	8.0	7.9	7.9	7.8	7.5	7.8	7.9	7.7	Avg:	8.0
60												

ACEMS Pollution Monitor Daily Report V4.1 01/12/1993 Page # 2
Company: Some company Location : Yourtown, Yourstate
Source : Boiler Pollutant: O2 Units: %

07:00	7.8	7.6	7.9	7.9	7.7	7.7	7.4	7.6	[illegible]	7.6		
07:10	7.2	5.6	7.5	8.0	7.6	7.9	8.0	8.0	[illegible]	7.9		
07:20	8.1	8.0	8.1	7.9	8.0	7.9	6.4	7.6	[illegible]	7.3		
07:30	8.3	8.5	8.5	8.3	8.3	7.7	8.0	8.1	[illegible]	7.6		
07:40	7.6	8.0	7.9	7.5	7.6	7.6	7.5	7.5	[illegible]	7.7		
07:50	7.2	7.5	7.6	7.6	7.2	7.6	7.6	7.4	[illegible]	7.5	Avg:	7.7
08:00	7.1	7.3	7.2	7.6	7.6	7.6	7.5	7.5	[illegible]	6.2		
08:10	6.7	6.6	6.9	5.6	6.4	8.1	8.1	7.9	[illegible]	7.0		
08:20	7.8	7.8	7.6	7.8	7.7	7.3	7.4	7.7	[illegible]	7.1		
08:30	7.3	7.6	7.7	7.8	7.5	7.5	7.5	7.6	[illegible]	7.8		
08:40	7.8	7.8	7.8	7.8	7.4	6.4	7.9	8.2	[illegible]	7.4		
08:50	7.8	8.1	7.8	7.0	7.6	7.6	8.0	7.9	[illegible]	7.9	Avg:	7.5
09:00	7.8	7.4	7.1	6.7	7.7	7.9	7.9	7.9	[illegible]	7.4		
09:10	7.7	7.8	7.7	7.2	7.6	7.8	7.7	7.4	[illegible]	7.8		
09:20	7.8	7.7	7.2	7.7	7.7	7.7	7.1	7.7	[illegible]	7.8		
09:30	7.8	8.0	7.8	7.8	7.8	7.9	7.9	7.8	[illegible]	7.8		
09:40	8.0	8.1	7.9	7.8	7.5	7.7	7.5	7.5	[illegible]	7.5		
09:50	8.0	7.5	7.6	8.0	7.7	7.7	8.0	8.1	[illegible]	8.1	Avg:	7.7
10:00	8.1	7.4	6.9	8.0	8.0	7.7	7.5	7.9	[illegible]	7.7		
10:10	7.7	7.6	7.6	7.4	7.3	7.3	7.4	7.3	[illegible]	7.0		
10:20	6.0	7.3	7.5	7.7	7.7	7.7	7.7	6.9	[illegible]	7.8		
10:30	7.8	7.9	7.7	7.7	7.6	6.9	7.4	7.7	[illegible]	7.8		
10:40	7.8	7.7	7.6	7.3	6.0	7.6	7.4	7.9	[illegible]	7.7		
10:50	8.1	8.1	7.9	8.1	8.1	8.0	8.0	7.9	[illegible]	7.7	Avg:	7.6
11:00	7.4	7.6	6.6	7.7	8.0	8.2	8.1	7.9	[illegible]	7.5		
11:10	6.7	7.7	7.9	8.1	7.9	7.9	7.7	7.4	[illegible]	7.0		
11:20	6.2	7.6	7.4	8.0	8.3	8.2	8.2	8.1	[illegible]	8.1		
11:30	8.0	8.0	8.0	7.9	7.8	7.1	6.4	7.8	[illegible]	8.0		
11:40	8.0	7.7	8.1	8.0	7.8	7.7	7.3	7.4	[illegible]	7.5		
11:50	6.9	7.6	7.3	7.7	7.4	7.5	7.6	7.5	[illegible]	7.7	Avg:	7.7
12:00	7.5	7.7	7.7	7.8	7.8	7.8	7.8	7.8	[illegible]	7.7		
12:10	7.4	6.7	7.8	7.6	7.6	7.9	7.6	6.4	[illegible]	7.7		
12:20	7.2	7.4	7.6	7.6	7.5	7.4	7.5	7.0	[illegible]	7.7		
12:30	7.6	7.8	7.9	7.4	7.5	7.8	7.7	7.8	[illegible]	7.4		
12:40	7.8	8.0	7.6	8.1	7.7	8.0	8.1	7.6	[illegible]	8.0		
12:50	8.0	7.9	7.9	7.9	7.4	7.9	8.0	8.0	[illegible]	8.0	Avg:	7.7
13:00	8.0	8.0	6.7	7.9	8.3	8.2	8.1	7.4	[illegible]	8.1		
13:10	8.1	8.1	8.1	8.0	8.1	8.0	7.4	7.9	[illegible]	7.5		
13:20	7.9	7.6	7.9	6.7	7.9	7.9	7.6	7.9	[illegible]	7.0		
13:30	7.8	7.5	8.0	7.5	7.8	8.1	8.9	9.7	[illegible]	8.1		
13:40	8.3	7.9	8.5	8.7	9.4	9.5	9.5	9.4	[illegible]	9.5		
13:50	8.9	6.7	7.9	9.1	9.5	9.5	9.6	8.9	[illegible]	8.1	Avg:	8.2

ACEMS Pollution Monitor Daily Report V4.1 01/12/1993 Page # 3
Company: Some company Location : Yourtown, Yourstate
Source : Boiler Pollutant: O2 Units: %

	14:00	8.1	7.9	8.7	8.8	8.4	8.4	8.5	8.4	8.3	8.1		
	14:10	8.4	8.4	8.5	8.3	8.2	8.3	8.4	8.4	8.0	7.9		
	14:20	8.0	7.9	7.8	7.9	7.7	7.8	7.7	7.6	7.9	6.9		
	14:30	7.5	8.2	8.1	8.2	8.1	8.0	7.9	7.7	7.9	7.9		
	14:40	7.8	7.7	7.5	7.5	7.6	7.5	7.4	7.5	7.4	7.6		
60	14:50	7.5	7.4	6.0	5.5	5.9	7.8	7.8	7.9	7.4	7.8	Avg:	7.8
	15:00	8.0	7.9	7.9	7.8	7.7	7.6	7.2	7.2	7.5	7.3		
	15:10	6.9	7.4	7.3	7.3	7.3	7.1	6.4	7.1	7.3	7.3		
	15:20	7.2	7.2	7.1	6.5	6.9	7.2	7.1	7.1	6.9	7.1		
	15:30	7.3	7.2	7.0	7.0	7.0	6.9	6.7	7.0	7.0	7.0		
	15:40	7.1	6.9	6.9	7.2	7.1	7.0	7.0	7.1	7.1	7.0		
60	15:50	6.9	6.9	7.0	7.1	7.1	6.3	6.8	7.1	6.5	6.8	Avg:	7.1
	16:00	7.1	7.1	7.0	7.2	7.2	6.9	6.9	7.0	7.1	7.1		
	16:10	7.1	7.1	7.1	7.2	7.2	6.3	6.2	7.3	7.4	7.4		
	16:20	7.3	7.4	7.4	6.5	7.0	7.6	7.6	7.6	7.5	7.5		
	16:30	7.4	7.5	7.5	7.5	7.4	7.4	7.4	7.6	7.6	7.5		
	16:40	7.5	7.5	7.3	7.6	7.6	7.6	7.5	7.6	7.6	7.6		
60	16:50	7.5	7.5	7.7	7.8	7.9	7.9	7.9	7.9	7.9	7.9	Avg:	7.4
	17:00	7.9	7.7	7.7	7.7	7.7	7.5	7.5	7.6	7.7	8.0		
	17:10	8.2	8.4	8.6	8.7	8.6	8.6	9.4	9.1	9.7	9.8		
	17:20	8.9	8.6	8.3	9.9	9.8	8.3	8.5	8.8	9.4	9.4		
	17:30	8.5	8.4	8.5	7.9	8.1	8.4	8.7	8.7	8.7	8.5		
	17:40	8.6	8.5	8.4	8.3	7.8	7.6	8.3	8.5	8.1	8.1		
60	17:50	8.2	8.3	8.3	8.1	8.0	8.1	8.1	8.0	8.0	7.8	Avg:	8.4
	18:00	7.7	7.8	7.5	7.9	7.5	7.4	7.2	7.4	7.2	8.0		
	18:10	8.0	7.5	7.9	8.1	7.0	7.6	8.1	7.8	7.9	8.0		
	18:20	7.9	8.0	8.0	6.1	7.7	8.0	8.3	8.4	8.4	8.3		
	18:30	8.2	8.0	8.2	8.0	8.0	7.8	8.1	8.1	8.0	7.9		
	18:40	7.8	7.9	7.2	7.7	7.7	7.9	7.8	7.8	7.4	7.2		
60	18:50	7.9	7.9	8.1	7.5	8.1	8.3	7.9	8.2	6.4	7.4	Avg:	7.8
	19:00	8.4	8.8	8.8	8.2	8.6	8.6	8.2	7.5	7.2	7.8		
	19:10	8.5	8.6	8.5	8.4	8.2	8.2	7.7	8.3	8.2	8.1		
	19:20	8.0	7.9	7.9	7.7	7.6	7.7	7.0	7.6	7.8	7.6		
	19:30	7.1	7.6	7.2	7.4	7.2	8.1	8.1	8.2	8.0	6.4		
	19:40	7.5	8.2	8.2	8.1	8.1	7.5	8.1	7.9	7.4	8.0		
60	19:50	8.0	8.0	8.0	7.5	8.0	8.0	8.0	7.9	7.5	7.4	Avg:	7.9
	20:00	8.0	7.9	7.9	8.0	8.0	7.7	7.8	8.0	8.2	8.2		
	20:10	8.2	8.1	8.0	6.7	7.7	6.9	7.7	8.1	8.3	8.3		
	20:20	8.3	8.3	8.2	8.0	7.3	7.6	8.3	8.3	8.1	8.0		
	20:30	7.8	7.2	7.8	8.0	7.9	7.9	7.8	7.0	7.8	8.0		
	20:40	8.0	7.9	8.0	7.8	7.8	7.9	8.1	7.9	7.8	7.9		
60	20:50	7.9	7.9	7.8	7.8	7.6	5.7	6.6	6.9	7.4	7.4	Avg:	7.8

ACEMS Pollution Monitor Daily Report V4.1 01/12/1993 Page # 4
Company: Some company Location : Yourtown, Yourstate
Source : Boiler Pollutant: O2 Units: %

21:00	7.0	7.8	8.6	8.5	8.2	8.1	7.7	6.5	7.9	7.9		
21:10	7.9	7.9	7.9	8.0	8.0	7.9	7.8	7.7	7.7	7.9		
21:20	7.8	7.8	7.1	5.8	8.0	9.0	9.3	9.1	7.8	8.0		
21:30	9.1	9.2	9.4	8.8	7.6	8.0	9.1	9.3	9.3	9.3		
21:40	7.8	7.4	7.2	7.1	7.2	6.9	6.9	7.0	6.6	6.5		
21:50	6.9	6.7	6.3	7.7	7.8	7.3	8.1	8.1	7.9	7.9	Avg:	7.8
22:00	7.9	7.8	7.6	7.6	7.5	7.5	7.6	7.4	7.0	6.7		
22:10	6.8	7.5	7.1	7.6	7.0	7.7	7.7	7.6	7.1	7.5		
22:20	7.6	7.5	7.4	7.0	7.4	7.3	7.2	7.3	7.2	7.1		
22:30	7.2	6.9	6.6	7.5	7.5	7.4	7.2	7.0	7.5	7.5		
22:40	7.5	7.5	7.4	7.0	7.4	7.4	7.5	7.5	7.5	7.5		
22:50	7.5	7.5	6.4	6.8	7.5	7.6	7.5	7.6	7.6	7.5	Avg:	7.3
23:00	7.4	7.5	7.5	7.4	6.9	7.4	7.5	7.4	7.6	7.5		
23:10	7.4	7.4	7.3	7.2	6.7	7.3	7.2	7.3	7.4	7.3		
23:20	7.4	7.5	7.6	7.6	7.5	7.5	7.3	6.6	7.3	7.6		
23:30	7.5	6.8	6.2	7.3	7.1	7.2	7.5	7.6	7.3	7.5		
23:40	7.4	7.2	7.0	7.4	7.4	7.3	7.3	7.4	7.3	7.1		
23:50	7.2	7.5	7.5	7.4	7.2	7.2	7.2	7.2	7.3	7.4	Avg:	7.3

Daily Average: 7.8 Count: 1426

Calibration Codes	Status Codes
IC - In calibration	CD - CEMSPEAK data error
SC - Span Calibration PASS	CT - CEMSPEAK task error
MC - Midrange Calibration PASS	DE - Data error
ZC - Zero Calibration PASS	HW - Hardware fault
CF - Calibration Fail	IG - Ignore Data
SF - Span Calibration Fail	LF - Communication Link Failure
MF - Midrange Calibration Fail	ND - No Data
ZF - Zero Calibration Fail	OD - Old Data
	DN - Process Down

End of report.

Daily Stack Calibration Summary

COMPANY: Your Company
PLANT:
STACK: Turbine 1 on Node turbine_1

PERIOD START: August 22, 1993
PERIOD END: September 03, 1993
Created: 09/03/93 Page 1

Ranges of Analyzers:

CO: 0.0 - 50.0 ppm
O2: 0.0 - 25.0 %
NOX_INLET: 0.0 - 200.0 ppm
NOX_OUT: 0.0 - 50.0 ppm
NH3: 0.0 - 50.0 ppm
COLO: 0.0 - 20.0 ppm

Date	Time	ANALYZER	TYPE	EXPECTED	ACTUAL	ABS	% RANGE	ALLOWANCE Units	%
09/03/93	05:29	NH3	SPAN	38.7	39.8	1.1	2.20%	2.5	5.0% P
09/03/93	05:29	NH3	ZERO	0.0	0.0	0.0	0.00%	2.5	5.0% P
09/03/93	05:29	NOX_OUT	SPAN	38.7	41.4	2.7	5.40%	2.5	5.0% F
09/03/93	05:29	NOX_OUT	ZERO	0.0	-0.1	0.1	0.20%	2.5	5.0% P
09/03/93	05:29	NOX_INLE	SPAN	182.0	177.0	5.0	2.50%	10.0	5.0% P
09/03/93	05:29	NOX_INLE	ZERO	0.0	0.0	0.0	0.00%	10.0	5.0% P
09/03/93	05:29	O2	SPAN	22.0	22.0	0.0	0.04%	0.5	2.0% P
09/03/93	05:29	O2	ZERO	0.0	-0.1	0.1	0.24%	0.5	2.0% P
09/03/93	05:29	COLO	SPAN	39.8	37.7	2.1	4.20%	2.5	5.0% P
09/03/93	05:29	COLO	ZERO	0.0	-0.8	0.8	1.60%	2.5	5.0% P
09/02/93	09:15	NH3	SPAN	38.7	39.0	0.3	0.60%	2.5	5.0% P
09/02/93	09:15	NH3	ZERO	0.0	0.0	0.0	0.00%	2.5	5.0% P
09/02/93	09:15	NOX_OUT	SPAN	38.7	38.7	0.0	0.00%	2.5	5.0% P
09/02/93	09:15	NOX_OUT	ZERO	0.0	0.0	0.0	0.00%	2.5	5.0% P
09/02/93	09:15	NOX_INLE	SPAN	182.0	181.2	0.8	0.40%	10.0	5.0% P
09/02/93	09:15	NOX_INLE	ZERO	0.0	0.0	0.0	0.00%	10.0	5.0% P
09/02/93	09:15	O2	SPAN	22.0	22.4	0.4	1.48%	0.5	2.0% P
09/02/93	09:15	O2	ZERO	0.0	0.1	0.1	0.52%	0.5	2.0% P
09/02/93	09:15	COLO	SPAN	39.8	38.0	1.8	3.60%	2.5	5.0% P
09/02/93	09:15	COLO	ZERO	0.0	-0.7	0.7	1.40%	2.5	5.0% P

	CO	O2	NOX_INLET	NOX_OUT	NH3	COLO
P - Pass	< 5.0%	< 2.0%	< 5.0%	< 5.0%	< 5.0%	< 5.0%
F - Fail	> 5.0%	> 2.0%	> 5.0%	> 5.0%	> 5.0%	> 5.0%

Sample Source Operation Report.

Source Operation Report
Quarter: 2 Year: 1991
Enertec Industrial, Inc.
811 West 5th St.
Source: CUB 101
CEMS id no.: _____

Operation Outage Began	Operation Outage Ended	Source Downtime dd/hh:mm	Reasons for Downtime	Corrective Action
04/01 00:00	05/23 10:06	52/09:07	Process down	system off line.
05/23 10:15	05/23 10:19	00:05	Data Acquisition down	None at this time.
05/23 10:35	05/23 10:35	00:01	Process down	None at this time.
05/23 10:43	05/23 10:44	00:02	Process down	None at this time.
05/23 10:59	05/23 13:59	03:01	Routine Maintenance	Scheduled maintenance.
05/23 14:04	05/28 09:16	4/19:13	Routine Maintenance	Scheduled maintenance.
05/28 10:12	05/28 10:12	00:01	Data Acquisition down	None at this time.
05/28 10:50	05/28 10:57	00:08	Data Acquisition down	None at this time.
05/28 10:59	05/28 11:03	00:05	Process down	None at this time.
05/29 10:52	05/29 13:29	02:38	Process down	Preventive maintenance.
05/29 13:33	05/29 13:34	00:02	Data Acquisition down	None at this time.
05/29 13:43	05/29 16:54	03:12	Preventive Maintenance	Scheduled maintenance.
05/30 08:52	05/30 09:02	00:11	Process down	None at this time.
05/30 11:25	05/30 13:27	02:03	Process down	None at this time.
05/30 13:31	05/30 13:31	00:01	Routine Maintenance	Scheduled maintenance.
05/30 14:09	05/30 14:10	00:02	Data Acquisition down	None at this time.
06/01 12:05	06/01 12:10	00:06	Process down	None at this time.
06/02 09:37	06/02 09:56	00:20	Process down	None at this time.
06/02 10:09	06/02 10:11	00:03	Data Acquisition down	None at this time.
06/02 11:37	06/02 11:44	00:08	Routine Maintenance	Scheduled maintenance.
06/02 12:22	06/02 13:22	00:01	Process down	None at this time.

Source Operation Report
Quarter: 2 Year: 1991
Enertec Industrial, Inc.
911 West 5th St.
Source: CUB 101
CEMS id no.: _____

Outage Summary

Total Times	DAYS/HRS:MINS
Process Up Time	4/18:53
Process Down Time	00:00
Data Acquisition Down Time	57/16:30
Total Time in Quarter	62/11:23

Time percentages		
Per cent process up time	7.7%	Process Uptime / Time in Quarter
Per cent process down time	0.0%	Process Downtime / Time in Quarter
Per cent DA down time	92.3%	DA Downtime / Time in Quarter
Total time	100.0%	

Process availability 7.7% Process Uptime / (Process Uptime + DA Downtime)

Calculate maximum additional DA downtime permitted for rest of quarter

ailability base = ocess uptime + DA downtime + time remaining in quarter	90/23:00
Less 90 % availability * availability base	81/20:42
Max DA downtime permitted for quarter	9/02:18
Less time that DA already down for quarter	57/16:30
Max DA downtime permitted in remainder of quarter	00:00

Sample of a PA Excess Emissions Report.

STANDARD EMISSIONS REPORT PAGE 1
COMPANY NAME: U. S. Steel Corp.
LOCATION: Clairton, PA.
SOURCE: Boiler
CEMS ID NO. (+SOURCE ID+ANALYZER ID): 0068910
PARAMETER: NOx#MBTU
QUARTER: 4
YEAR: 92
UNITS: lbs

HOUR	1	2	3	4	5	6	7	8
	9	10	11	12	13	14	15	16
	17	18	19	20	21	22	23	24
	XXXX.PC	XXXX.PC	XXXX.PC	XXXX.PC	XXXX.PC	XXXX.PC	XXXX.PC	XXXX.PC
DAY								
01	0006.08	0006.08	0007.08	0007.08	0007.08	0006.08	0006.08	0007.08
	0007.08	0005.08	0005.08	0005.08	0005.08	0005.08	0005.08	0006.08
	0005.08	0005.08	0006.08	0006.08	0006.08	0005.08	0005.08	0006.08
02	0005.08	0005.08	0005.08	0005.08	0005.08	0005.08	0005.08	0006.08
	0007.08	0005.08	0005.08	0008.08	0005.08	0005.08	0006.08	0006.08
	0005.08	0005.08	0005.08	0005.08	0005.08	0005.08	0005.08	0005.08
03	0004.08	0004.08	0004.08	0004.08	0004.08	0004.08	0004.08	0006.08
	0005.08	0004.08	0004.08	0004.08	0004.08	0004.08	0004.08	0005.08
	0004.08	0004.08	0004.08	0004.08	0004.08	0004.08	0004.08	0004.08
04	0004.08	0004.08	0004.08	0003.08	0003.08	0003.08	0003.08	0005.08
	0005.08	0003.08	0003.08	0003.08	0003.08	0003.08	0004.08	0004.08
	0003.08	0003.08	0003.08	0003.08	0003.08	0002.08	0002.08	0002.08
05	0001.08	0002.08	0002.08	0002.08	0001.08	0001.08	0001.08	0003.08
	0003.08	0001.08	0001.08	0001.08	0002.08	0002.08	0002.08	0003.08
	0002.08	0002.08	0002.08	0002.08	0002.08	0002.08	0002.08	0002.08
06	0001.08	0001.08	0001.08	0001.08	0001.08	0001.08	0001.08	0003.08
	0002.08	0000.08	0000.08	0001.08	0001.08	II21.08	0007.08	0006.08
	0006.08	0007.08	0007.08	0007.08	0007.08	0007.08	0007.08	0007.08
07	0007.08	0007.08	0007.08	0007.08	0007.08	0007.08	0007.08	0007.08
	II21.08	II21.08	0010.08	0008.08	0007.08	0007.08	0007.08	0007.08
	0008.08	0007.08	0008.08	0007.08	0007.08	0007.08	0007.08	0007.08
08	0007.08	0008.08	0008.08	0007.08	0007.08	0008.08	0008.08	0008.08
	II18.08	II18.08	0008.08	II21.08	II21.08	II21.08	0010.08	0011.08
	0010.08	0010.08	0010.08	0011.08	0010.08	0010.08	0010.08	0010.08
09	0009.08	0010.08	0011.08	0012.08	0012.08	0014.08	0016.08	0016.08
	0015.08	0013.08	0012.08	0011.08	II21.08	0011.08	0011.08	0011.08
	0010.08	0010.08	0010.08	0010.08	0010.08	0010.08	0010.08	0011.08
10	0011.08	0010.08	0011.08	0011.08	0010.08	0010.08	0011.08	0011.08
	0014.08	0012.08	0011.08	0011.08	0011.08	0011.08	0011.08	0011.08
	0011.08	0010.08	0011.08	0011.08	0011.08	0011.08	0011.08	0012.08
11	0011.08	0011.08	0010.08	0010.08	0010.08	0010.08	0010.08	0010.08

STANDARD EMISSIONS REPORT PAGE 2
CEMS ID NO. (+SOURCE ID+ANALYZER ID): 0068910
QUARTER: 4
YEAR: 92

HOUR	1	2	3	4	5	6	7	8
	9	10	11	12	13	14	15	16
	17	18	19	20	21	22	23	24
	XXXX.PC	XXXX.PC	XXXX.PC	XXXX.PC	XXXX.PC	XXXX.PC	XXXX.PC	XXXX.PC
DAY								
	0012.08	0010.08	0010.08	0012.08	0011.08	0009.08	0009.08	0010.08
	0010.08	0010.08	0011.08	0011.08	0011.08	0012.08	0012.08	0013.08
12	0012.08	0012.08	0012.08	0012.08	0011.08	0010.08	0011.08	0012.08
	0012.08	0011.08	0011.08	0013.08	0010.08	0010.08	0010.08	0011.08
	0010.08	0010.08	0010.08	0010.08	0010.08	0010.08	0010.08	0010.08
13	0010.08	0009.08	0009.08	0010.08	0009.08	0009.08	0009.08	0010.08
	0011.08	0010.08	0010.08	II21.08	0010.08	0010.08	0010.08	0011.08
	0010.08	0010.08	0010.08	0011.08	0011.08	0011.08	0011.08	0011.08
14	0011.08	0010.08	0010.08	0011.08	0011.08	0011.08	0011.08	0011.08
	II21.08	II21.08	0010.08	0010.08	0010.08	0010.08	0010.08	0010.08
	0010.08	0010.08	0011.08	0013.08	0013.08	0013.08	0012.08	0013.08
15	0012.08	0013.08	0013.08	0011.08	0011.08	0010.08	0011.08	0011.08
	0012.08	0010.08	0011.08	0011.08	0011.08	0010.08	0010.08	0011.08
	0011.08	0011.08	0010.08	0010.08	0010.08	0010.08	0010.08	0010.08
16	0010.08	0010.08	0010.08	0010.08	0010.08	0010.08	0011.08	0011.08
	0011.08	0010.08	0010.08	0010.08	0010.08	0010.08	0011.08	0011.08
	0010.08	0010.08	0011.08	0011.08	0011.08	0011.08	0011.08	0012.08
17	0011.08	0011.08	0011.08	0010.08	0009.08	0007.08	0007.08	0008.08
	0011.08	0010.08	0009.08	0010.08	0009.08	0010.08	0010.08	0010.08
	0010.08	0011.08	0011.08	0012.08	0012.08	0012.08	0012.08	0012.08
18	0012.08	0012.08	0012.08	0012.08	0012.08	0011.08	0011.08	0011.08
	0012.08	0010.08	0010.08	0011.08	0011.08	0009.08	0012.08	0014.08
	0013.08	0010.08	0014.08	0011.08	0010.08	0010.08	0010.08	0010.08
19	0010.08	0012.08	0009.08	0010.08	0010.08	0010.08	0010.08	0011.08
	0011.08	0009.08	0010.08	0010.08	0009.08	0009.08	0010.08	0010.08
	0010.08	0010.08	0010.08	0010.08	0009.08	0009.08	0009.08	0009.08
20	0008.08	0008.08	0008.08	0008.08	0008.08	0007.08	0010.08	II16.08
	II21.08	II21.08	II16.08	II21.08	II21.08	II21.08	II21.08	II20.08
	II20.08	0010.08	0011.08	0012.08	0011.08	0011.08	0011.08	0011.08
21	0010.08	0010.08	0010.08	0010.08	0008.08	0008.08	0011.08	II21.08
	II21.08	II21.08	II21.08	0010.08	0011.08	II21.08	II21.08	0009.08
	0009.08	0009.08	0010.08	0011.08	0010.08	0009.08	0010.08	0011.08
22	0011.08	0010.08	0009.08	0009.08	0009.08	0010.08	0011.08	0011.08
	0011.08	0010.08	0010.08	0010.08	II21.08	II21.08	0010.08	0011.08
	0011.08	0010.08	0008.08	0009.08	0009.08	0009.08	0010.08	0011.08
23	0012.08	0012.08	0012.08	0012.08	0011.08	0011.08	0012.08	0012.08
	0012.08	II18.08	II21.08	0011.08	0011.08	0011.08	0011.08	0011.08

STANDARD EMISSIONS REPORT PAGE 3
CEMS ID NO. (+SOURCE ID+ANALYZER ID): 0068910
QUARTER: 4
YEAR: 92

HOUR	1	2	3	4	5	6	7	8
	9	10	11	12	13	14	15	16
	17	18	19	20	21	22	23	24
	XXXX.PC	XXXX.PC	XXXX.PC	XXXX.PC	XXXX.PC	XXXX.PC	XXXX.PC	XXXX.PC
DAY								
	0011.08	0010.08	0009.08	0010.08	0009.08	0009.08	0009.08	0010.08
24	0010.08	0009.08	0008.08	0007.08	0008.08	0008.08	0008.08	0008.08
	0009.08	0009.08	0007.08	0008.08	0009.08	0009.08	0009.08	0010.08
	0009.08	0010.08	0011.08	0011.08	0011.08	0011.08	0012.08	0011.08
25	0011.08	0011.08	0011.08	0011.08	0011.08	0012.08	0012.08	0012.08
	0012.08	II18.08	II18.08	II21.08	0012.08	0012.08	0012.08	0012.08
	0012.08	0012.08	0013.08	0012.08	0012.08	0011.08	0012.08	0012.08
26	0011.08	0012.08	0012.08	0013.08	0012.08	0011.08	0012.08	0012.08
	0011.08	II18.08	0014.08	0012.08	0011.08	0011.08	0011.08	0012.08
	0012.08	0011.08	0011.08	0013.08	0012.08	0012.08	0012.08	0012.08
27	0012.08	0012.08	0012.08	0013.08	0012.08	0012.08	0013.08	0012.08
	II21.08	II21.08	II21.08	II21.08	II21.08	II21.08	0010.08	0010.08
	0010.08	0010.08	0011.08	0011.08	0012.08	0012.08	0011.08	0011.08
28	0011.08	0012.08	0012.08	0012.08	0011.08	0012.08	0011.08	0011.08
	II18.08	0014.08	0013.08	0012.08	0011.08	0012.08	0010.08	0010.08
	0010.08	0011.08	0012.08	0012.08	0012.08	0012.08	0012.08	0012.08
29	0012.08	0012.08	0012.08	0012.08	0012.08	0013.08	0012.08	0012.08
	II18.08	II18.08	II18.08	II18.08	II18.08	II18.08	II18.08	II18.08
	II18.08	II18.08	II18.08	II18.08	II18.08	II18.08	II18.08	II18.08
30	II18.08	II18.08	II18.08	II18.08	II18.08	II18.08	II18.08	0012.08
	0012.08	0011.08	0011.08	0012.08	0012.08	0012.08	0011.08	0011.08
	0011.08	0012.08	0011.08	0010.08	0011.08	0011.08	0011.08	0012.08
31	0012.08	0011.08	0011.08	0012.08	0012.08	0012.08	0012.08	0013.08
	0017.08	0017.08	0017.08	0016.08	0014.08	0012.08	0012.08	0011.08
	0012.08	0011.08	0012.08	0014.08	0015.08	0014.08	0013.08	0013.08
32	0011.08	0011.08	0012.08	0011.08	0011.08	0012.08	0013.08	0013.08
	0013.08	0012.08	0012.08	0012.08	0012.08	0012.08	0013.08	0013.08
	0011.08	0011.08	0012.08	0012.08	0012.08	0012.08	0012.08	0012.08
33	0013.08	0013.08	0014.08	0013.08	0013.08	0013.08	0013.08	0012.08
	0013.08	0011.08	0010.08	0010.08	0008.08	0000.08	0000.08	0000.08
	0000.08	0000.08	0000.08	0000.08	0000.08	0000.08	0000.08	0000.08
34	0000.08	0000.08	0000.08	0000.08	0000.08	II13.08	II13.08	II13.08
	II13.08	II13.08	II13.08	II13.08	II13.08	II13.08	II13.08	II13.08
	II13.08	II13.08	II13.08	II13.08	II13.08	II13.08	II13.08	II13.08
35	II13.08	II13.08	II13.08	II13.08	II13.08	II13.08	0000.08	0000.08
	0000.08	0000.08	0002.08	0001.08	0000.08	0000.08	0000.08	0000.08
	0000.08	0000.08	0000.08	0000.08	0000.08	0000.08	0000.08	0000.08

STANDARD EMISSIONS REPORT PAGE 4
CEMS ID NO. (+SOURCE ID+ANALYZER ID): 0068910
QUARTER: 4
YEAR: 92

HOUR	1	2	3	4	5	6	7	8
	9	10	11	12	13	14	15	16
	17	18	19	20	21	22	23	24
	XXXX.PC	XXXX.PC	XXXX.PC	XXXX.PC	XXXX.PC	XXXX.PC	XXXX.PC	XXXX.PC
DAY								
36	0000.08	0000.08	0000.08	0000.08	0000.08	0000.08	0000.08	II21.08
	II16.08	II16.08	II16.08	II16.08	II16.08	II16.08	II16.08	II16.08
	0008.08	0007.08	0008.08	0008.08	0008.08	0009.08	0009.08	0009.08
37	0009.08	0010.08	0010.08	0011.08	0011.08	0011.08	0011.08	0011.08
	II16.08	II16.08	0012.08	0012.08	0011.08	0011.08	0012.08	0013.08
	0012.08	0013.08	0012.08	0012.08	0012.08	0011.08	0011.08	0011.08
38	0012.08	0011.08	0010.08	0010.08	0011.08	0011.08	0011.08	0012.08
	0013.08	0012.08	0011.08	0011.08	II18.08	0011.08	0011.08	0011.08
	0012.08	0013.08	0013.08	0013.08	0013.08	0013.08	0012.08	0011.08
39	0011.08	0011.08	0011.08	0011.08	0009.08	0010.08	0009.08	0010.08
	0011.08	0011.08	0010.08	0009.08	0008.08	0009.08	0008.08	0010.08
	0011.08	0011.08	0012.08	0011.08	0011.08	0011.08	0010.08	0009.08
40	0010.08	0012.08	0011.08	0010.08	0010.08	0010.08	0009.08	0010.08
	0011.08	0009.08	0009.08	0009.08	0009.08	0009.08	0009.08	0009.08
	0010.08	0011.08	0010.08	0010.08	0011.08	0011.08	0011.08	0012.08
41	0012.08	0011.08	0010.08	0011.08	0011.08	0011.08	0011.08	0012.08
	0012.08	0010.08	0010.08	0011.08	0011.08	0011.08	0010.08	0011.08
	0011.08	0011.08	0012.08	0012.08	0012.08	0012.08	0011.08	0010.08
42	0010.08	0010.08	0010.08	0010.08	0011.08	0011.08	0011.08	0011.08
	0012.08	0011.08	0012.08	0011.08	0011.08	0010.08	0011.08	0011.08
	0010.08	0011.08	0011.08	0011.08	0011.08	0011.08	0010.08	0009.08
43	0010.08	0011.08	0011.08	0011.08	0012.08	0012.08	0013.08	0014.08
	II21.08	0013.08	0012.08	0011.08	0011.08	0011.08	0010.08	0011.08
	0013.08	0013.08	0013.08	0013.08	0012.08	0012.08	0012.08	0013.08
44	0014.08	0014.08	0014.08	0013.08	0014.08	0014.08	0014.08	0013.08
	II16.08	II16.08	II16.08	II16.08	0015.08	0015.08	0014.08	0014.08
	0014.08	0016.08	0015.08	0014.08	0014.08	0012.08	0012.08	0012.08
45	0012.08	0013.08	0014.08	0013.08	0014.08	0014.08	0013.08	0013.08
	II21.08	0013.08	0012.08	0012.08	0013.08	0014.08	0014.08	0013.08
	0013.08	0013.08	0013.08	0012.08	0012.08	0012.08	0012.08	0012.08
46	0012.08	0012.08	0013.08	0012.08	0012.08	0012.08	0012.08	0012.08
	II21.08	II21.08	0013.08	0012.08	0012.08	0012.08	0013.08	0012.08
	0012.08	0012.08	0013.08	0012.08	0012.08	0011.08	0012.08	0012.08
47	0011.08	0011.08	0012.08	0011.08	0011.08	0012.08	0013.08	0012.08
	II16.08	II16.08	II16.08	II16.08	0011.08	0011.08	0011.08	0011.08
	0011.08	0012.08	0012.08	0011.08	0010.08	0011.08	0011.08	0011.08
48	0011.08	0011.08	0011.08	0011.08	0011.08	0011.08	0011.08	0011.08

STANDARD EMISSIONS REPORT PAGE 5
CEMS ID NO. (+SOURCE ID+ANALYZER ID): 0068910
QUARTER: 4
YEAR: 92

HOUR	1	2	3	4	5	6	7	8
	9	10	11	12	13	14	15	16
	17	18	19	20	21	22	23	24
	XXXX.PC	XXXX.PC	XXXX.PC	XXXX.PC	XXXX.PC	XXXX.PC	XXXX.PC	XXXX.PC
DAY								
	II16.08	II16.08	0014.08	0012.08	0011.08	0011.08	0011.08	0011.08
	0011.08	0011.08	0011.08	0010.08	0010.08	0011.08	0011.08	0010.08
49	0010.08	0010.08	0011.08	0010.08	0010.08	0011.08	0010.08	0011.08
	0012.08	0011.08	0011.08	0011.08	0011.08	0011.08	0011.08	0011.08
	0011.08	0012.08	0012.08	0011.08	0011.08	0012.08	II16.08	0011.08
50	0011.08	0012.08	0012.08	0011.08	0011.08	0011.08	0012.08	0011.08
	II21.08	0012.08	0012.08	0011.08	0011.08	0012.08	0012.08	0011.08
	0011.08	0012.08	0012.08	0012.08	0012.08	0011.08	0011.08	0010.08
51	0010.08	0010.08	0011.08	0011.08	0010.08	0010.08	0011.08	II21.08
	0009.08	0010.08	0011.08	0010.08	0011.08	0010.08	0010.08	0011.08
	0011.08	0011.08	0011.08	0011.08	0011.08	0011.08	0011.08	0011.08
52	0012.08	0011.08	0010.08	0011.08	0011.08	0011.08	0011.08	0012.08
	II21.08	0011.08	0011.08	0012.08	0011.08	0011.08	0011.08	0012.08
	0011.08	0011.08	0011.08	0011.08	0011.08	0011.08	0011.08	0012.08
53	0011.08	0011.08	0011.08	0011.08	0012.08	0011.08	0010.08	0011.08
	0012.08	0011.08	0011.08	0011.08	0011.08	0010.08	0011.08	0011.08
	0011.08	0010.08	0011.08	0011.08	0012.08	0011.08	0011.08	0011.08
54	0011.08	0011.08	0012.08	0014.08	0015.08	0015.08	0014.08	0013.08
	0014.08	0013.08	0013.08	0013.08	0014.08	0013.08	0012.08	0012.08
	0013.08	0013.08	0012.08	0013.08	0014.08	0013.08	0012.08	0013.08
55	0014.08	0012.08	0013.08	0014.08	0015.08	0014.08	0013.08	0014.08
	II12.08	II12.08	0012.08	0013.08	0012.08	0012.08	0012.08	0013.08
	0013.08	0012.08	0012.08	0012.08	0012.08	0012.08	0011.08	0012.08
56	0011.08	0011.08	0011.08	0012.08	0012.08	0012.08	0012.08	0012.08
	II21.08	II21.08	0012.08	0012.08	0011.08	0012.08	0012.08	0013.08
	0013.08	0013.08	0013.08	0013.08	0012.08	0011.08	0011.08	0011.08
57	0011.08	0012.08	0012.08	0011.08	0011.08	0011.08	0011.08	0011.08
	0011.08	0012.08	0013.08	0014.08	0013.08	0013.08	0013.08	0013.08
	0013.08	0013.08	0012.08	0012.08	0013.08	0012.08	0012.08	0013.08
58	0013.08	0012.08	0009.08	0008.08	0007.08	0008.08	0010.08	0014.08
	0014.08	0012.08	0012.08	0012.08	0012.08	0012.08	0012.08	0013.08
	0012.08	0012.08	0012.08	0013.08	0013.08	0012.08	0011.08	0012.08
59	0012.08	0011.08	0012.08	0012.08	0012.08	0011.08	0011.08	0012.08
	0011.08	0011.08	0011.08	0012.08	0011.08	0011.08	0010.08	0011.08
	0005.08	0005.08	0007.08	0010.08	0014.08	0015.08	0014.08	0014.08
60	0013.08	0012.08	0012.08	0013.08	0013.08	0012.08	0012.08	0013.08
	0014.08	0013.08	0013.08	0013.08	0013.08	0012.08	0013.08	0013.08

STANDARD EMISSIONS REPORT PAGE 6
CEMS ID NO. (+SOURCE ID+ANALYZER ID): 0068910
QUARTER: 4
YEAR: 92

HOUR	1	2	3	4	5	6	7	8
	9	10	11	12	13	14	15	16
	17	18	19	20	21	22	23	24
	XXXX.PC	XXXX.PC	XXXX.PC	XXXX.PC	XXXX.PC	XXXX.PC	XXXX.PC	XXXX.PC
DAY								
	0010.08	0010.08	0010.08	0011.08	0011.08	0010.08	0004.08	0007.08
61	0017.08	0011.08	0010.08	0012.08	0012.08	0011.08	0011.08	0011.08
	0011.08	0011.08	0011.08	0011.08	0011.08	II21.08	0011.08	0011.08
	0011.08	0011.08	0011.08	0011.08	0012.08	0012.08	0011.08	0011.08
62	0011.08	0012.08	0011.08	0011.08	0011.08	0012.08	0012.08	0014.08
	0012.08	0011.08	0012.08	0013.08	0011.08	0011.08	II21.08	0012.08
	0012.08	0012.08	0013.08	0014.08	0014.08	0011.08	0013.08	0012.08
63	0013.08	0012.08	0013.08	0013.08	0013.08	0012.08	0013.08	0013.08
	0013.08	0013.08	0013.08	0014.08	0012.08	0012.08	0012.08	0012.08
	0012.08	0012.08	0012.08	0013.08	0012.08	0011.08	0012.08	0013.08
64	0013.08	0013.08	0013.08	0013.08	0012.08	0012.08	0011.08	0011.08
	0010.08	0011.08	0012.08	0013.08	0012.08	0012.08	0012.08	0012.08
	0011.08	0012.08	0012.08	0013.08	0012.08	0011.08	0011.08	0012.08
65	0011.08	0010.08	0011.08	0012.08	0012.08	0012.08	0012.08	0013.08
	0013.08	0012.08	0013.08	II21.08	0012.08	0012.08	0012.08	0013.08
	0013.08	0014.08	0014.08	0013.08	0012.08	0013.08	0013.08	0014.08
66	0013.08	0013.08	0013.08	0014.08	0013.08	0014.08	0017.08	0015.08
	0014.08	0013.08	0014.08	0015.08	0013.08	0013.08	0012.08	0013.08
	0012.08	0012.08	0013.08	0014.08	0014.08	0014.08	0014.08	0015.08
67	0014.08	0014.08	0014.08	0015.08	0014.08	0014.08	0014.08	0014.08
	0013.08	0013.08	0014.08	II21.08	0015.08	0014.08	0013.08	0014.08
	0014.08	0014.08	0014.08	0015.08	0014.08	0014.08	0014.08	0014.08
68	0014.08	0014.08	0014.08	0014.08	0014.08	0014.08	0014.08	0015.08
	0014.08	0014.08	0014.08	0016.08	0015.08	0014.08	0014.08	0014.08
	0014.08	0014.08	0014.08	0015.08	0014.08	0014.08	0014.08	0016.08
69	0014.08	0013.08	0013.08	0014.08	0014.08	0014.08	0014.08	0015.08
	0014.08	0013.08	0014.08	0014.08	0014.08	0013.08	0013.08	0014.08
	0013.08	0012.08	II18.08	II18.08	II18.08	II18.08	II18.08	II18.08
70	II18.08	II18.08	II18.08	II18.08	II18.08	II18.08	II18.08	II18.08
	II18.08	II18.08	II18.08	II18.08	II18.08	II18.08	II18.08	II18.08
	II18.08	II18.08	II18.08	II18.08	II18.08	II18.08	II18.08	II18.08
71	II18.08	II18.08	II18.08	II18.08	II18.08	II18.08	II18.08	II18.08
	II18.08	II18.08	II18.08	II18.08	II18.08	II18.08	II18.08	II18.08
	II18.08	II18.08	II18.08	II18.08	II18.08	II18.08	II18.08	II18.08
72	II18.08	II18.08	II18.08	II18.08	II18.08	II18.08	II18.08	II18.08
	II18.08	II18.08	II18.08	II18.08	II18.08	II18.08	II18.08	II18.08
	II18.08	II18.08	II18.08	II18.08	II18.08	II18.08	II18.08	II18.08

STANDARD EMISSIONS REPORT PAGE 7
CEMS ID NO. (+SOURCE ID+ANALYZER ID): 0068910
QUARTER: 4
YEAR: 92

HOUR	1	2	3	4	5	6	7	8
	9	10	11	12	13	14	15	16
	17	18	19	20	21	22	23	24
	XXXX.PC	XXXX.PC	XXXX.PC	XXXX.PC	XXXX.PC	XXXX.PC	XXXX.PC	XXXX.PC
DAY								
73	II18.08	II18.08	II18.08	II18.08	II18.08	II18.08	II18.08	II18.08
	II18.08	II18.08	II18.08	II18.08	II18.08	II18.08	II18.08	II18.08
	II18.08	II18.08	II18.08	II18.08	II18.08	II18.08	II18.08	II18.08
74	II18.08	II18.08	II18.08	II18.08	II18.08	II18.08	II18.08	II18.08
	II18.08	II18.08	II18.08	II18.08	II18.08	II18.08	II18.08	II18.08
	II18.08	II18.08	II18.08	II18.08	II18.08	II18.08	II18.08	II18.08
75	II18.08	II18.08	II18.08	II18.08	II18.08	II18.08	II18.08	II18.08
	II18.08	II18.08	II18.08	II18.08	II18.08	II18.08	II18.08	II18.08
	II18.08	II18.08	II18.08	II18.08	II18.08	II18.08	II18.08	II18.08
76	II18.08	II18.08	II18.08	II18.08	II18.08	II18.08	II18.08	II18.08
	II18.08	II18.08	II18.08	II18.08	II18.08	II18.08	II18.08	II18.08
	II18.08	II18.08	II18.08	II18.08	II18.08	II18.08	II18.08	II18.08
77	II18.08	II18.08	II18.08	II18.08	II18.08	II18.08	II18.08	II18.08
	II18.08	II18.08	II18.08	II18.08	II18.08	II18.08	II18.08	II18.08
	II18.08	II18.08	II18.08	II18.08	II18.08	II18.08	II18.08	II18.08
78	II18.08	II18.08	II18.08	II18.08	II18.08	II18.08	II18.08	II18.08
	II18.08	II18.08	II18.08	II18.08	II18.08	II18.08	II18.08	II18.08
	II18.08	II18.08	II18.08	II18.08	II18.08	II18.08	II18.08	II18.08
79	II18.08	II18.08	II18.08	II18.08	II18.08	II18.08	II18.08	II18.08
	II18.08	II18.08	II18.08	II18.08	II18.08	II18.08	II18.08	II18.08
	II18.08	II18.08	II18.08	II18.08	II18.08	II18.08	II18.08	II18.08
80	II18.08	II18.08	II18.08	II18.08	II18.08	II18.08	II18.08	II18.08
	II18.08	II18.08	II18.08	II18.08	II18.08	II18.08	II18.08	II18.08
	II18.08	II18.08	II18.08	II18.08	II18.08	II18.08	II18.08	II18.08
81	II18.08	II18.08	II18.08	II18.08	II18.08	II18.08	II18.08	II18.08
	II18.08	II18.08	II18.08	II18.08	II18.08	II18.08	II18.08	II18.08
	II18.08	II18.08	II18.08	II18.08	II18.08	II18.08	II18.08	II18.08
82	II18.08	II18.08	II18.08	II18.08	II18.08	II18.08	II18.08	II18.08
	II18.08	II18.08	II18.08	II18.08	II18.08	II18.08	II18.08	II18.08
	II18.08	II18.08	II18.08	II18.08	II18.08	II18.08	II18.08	II18.08
83	II18.08	II18.08	II18.08	II18.08	II18.08	II18.08	II18.08	II18.08
	II18.08	II18.08	II18.08	II18.08	II18.08	II18.08	II18.08	II18.08
	II18.08	II18.08	II18.08	II18.08	II18.08	II18.08	II18.08	II18.08
84	II18.08	II18.08	II18.08	II18.08	II18.08	II18.08	II18.08	II18.08
	II18.08	II18.08	II18.08	II18.08	II18.08	II18.08	II18.08	II18.08
	II18.08	II18.08	II18.08	II18.08	II18.08	II18.08	II18.08	II18.08
85	II18.08	II18.08	II18.08	II18.08	II18.08	II18.08	II18.08	II18.08

STANDARD EMISSIONS REPORT PAGE 8
CEMS ID NO. (+SOURCE ID+ANALYZER ID): 0068910
QUARTER: 4
YEAR: 92

HOUR	1	2	3	4	5	6	7	8
	9	10	11	12	13	14	15	16
	17	18	19	20	21	22	23	24
	XXXX.PC	XXXX.PC	XXXX.PC	XXXX.PC	XXXX.PC	XXXX.PC	XXXX.PC	XXXX.PC
DAY								
	II18.08	II18.08	II18.08	II18.08	II18.08	II18.08	II18.08	II18.08
	II18.08	II18.08	II18.08	II18.08	II18.08	II18.08	II18.08	II18.08
86	II18.08	II18.08	II18.08	II18.08	II18.08	II18.08	II18.08	II18.08
	II18.08	II18.08	II18.08	II18.08	II18.08	II18.08	II18.08	II18.08
	II18.08	II18.08	II18.08	II18.08	II18.08	II18.08	II18.08	II18.08
	II18.08	II18.08	II18.08	II18.08	II18.08	II18.08	II18.08	II18.08
87	II18.08	II18.08	II18.08	II18.08	II18.08	II18.08	II18.08	II18.08
	II18.08	II18.08	II18.08	II18.08	II18.08	II18.08	II18.08	II18.08
	II18.08	II18.08	II18.08	II18.08	II18.08	II18.08	II18.08	II18.08
88	II18.08	II18.08	II18.08	II18.08	II18.08	II18.08	II18.08	II18.08
	II18.08	II18.08	II18.08	II18.08	II18.08	II18.08	II18.08	II18.08
	II18.08	II18.08	II18.08	II18.08	II18.08	II18.08	II18.08	II18.08
89	II18.08	II18.08	II18.08	II18.08	II18.08	II18.08	II18.08	II18.08
	II18.08	II18.08	II18.08	II18.08	II18.08	II18.08	II18.08	II18.08
	II18.08	II18.08	II18.08	II18.08	II18.08	II18.08	II18.08	II18.08
90	II18.08	II18.08	II18.08	II18.08	II18.08	II18.08	II18.08	II18.08
	II18.08	II18.08	II18.08	II18.08	II18.08	II18.08	II18.08	II18.08
	II18.08	II18.08	II18.08	II18.08	II18.08	II18.08	II18.08	II18.08
91	II18.08	II18.08	II18.08	II18.08	II18.08	II18.08	II18.08	II18.08
	II18.08	II18.08	II18.08	II18.08	II18.08	II18.08	II18.08	II18.08
	II18.08	II18.08	II18.08	II18.08	II18.08	II18.08	II18.08	II18.08
92	II18.08	II18.08	II18.08	II18.08	II18.08	II18.08	II18.08	II18.08
	II18.08	II18.08	II18.08	II18.08	II18.08	II18.08	II18.08	II18.08
	II18.08	II18.08	II18.08	II18.08	II18.08	II18.08	II18.08	II18.08

CALIBRATION ERROR CHECK RESULTS (%):
ID
LO
MD
HI

PROCESS CODES (PC):

01= CHANGING FUELS	04= SHUTDOWN	07= CLEAN CONTROL EQUIP.
02= CONTROL EQUIP. MALF.	05= CHANGING OPERATING LEVEL	08= NORMAL OPERATION
03= STARTUP	06= CLEAN PROCESS EQUIP.	09= OTHER

MONITORING CODES (MC) (XXXX=IIMC if invalid):

10= REQUIRED ADJUSTMENT NOT MADE	16= PRIMARY ANALYZER MALFUNCTION
11= EXCESS DRIFT PRIMARY ANALYZER	17= ANCILLARY ANALYZER MALFUNCTION
12= EXCESS DRIFT ANCILLARY ANALYZER	18= DATA HANDLING SYSTEM MALFUNCTION
13= PROCESS DOWN	19= SAMPLE INTERFACE MALFUNCTION
14= RECALIBRATION	20= CORRECTIVE MAINTENANCE
15= PREVENTIVE MAINTENANCE	21= OTHER

TO THE BEST OF MY KNOWLEDGE, THE INFORMATION IN THIS REPORT REPRESENTS TRUE AND ACCURATE DATA.

XXXX = PPM FOR HCL,SO2,CO,NOX
%X100 FOR O2,C.E.,SO2R HCLR,OPACITY
DEG FOR TEMPERATURE

SIGNED _____

TITLE _____

APPENDIX D System Design & Flow Diagrams

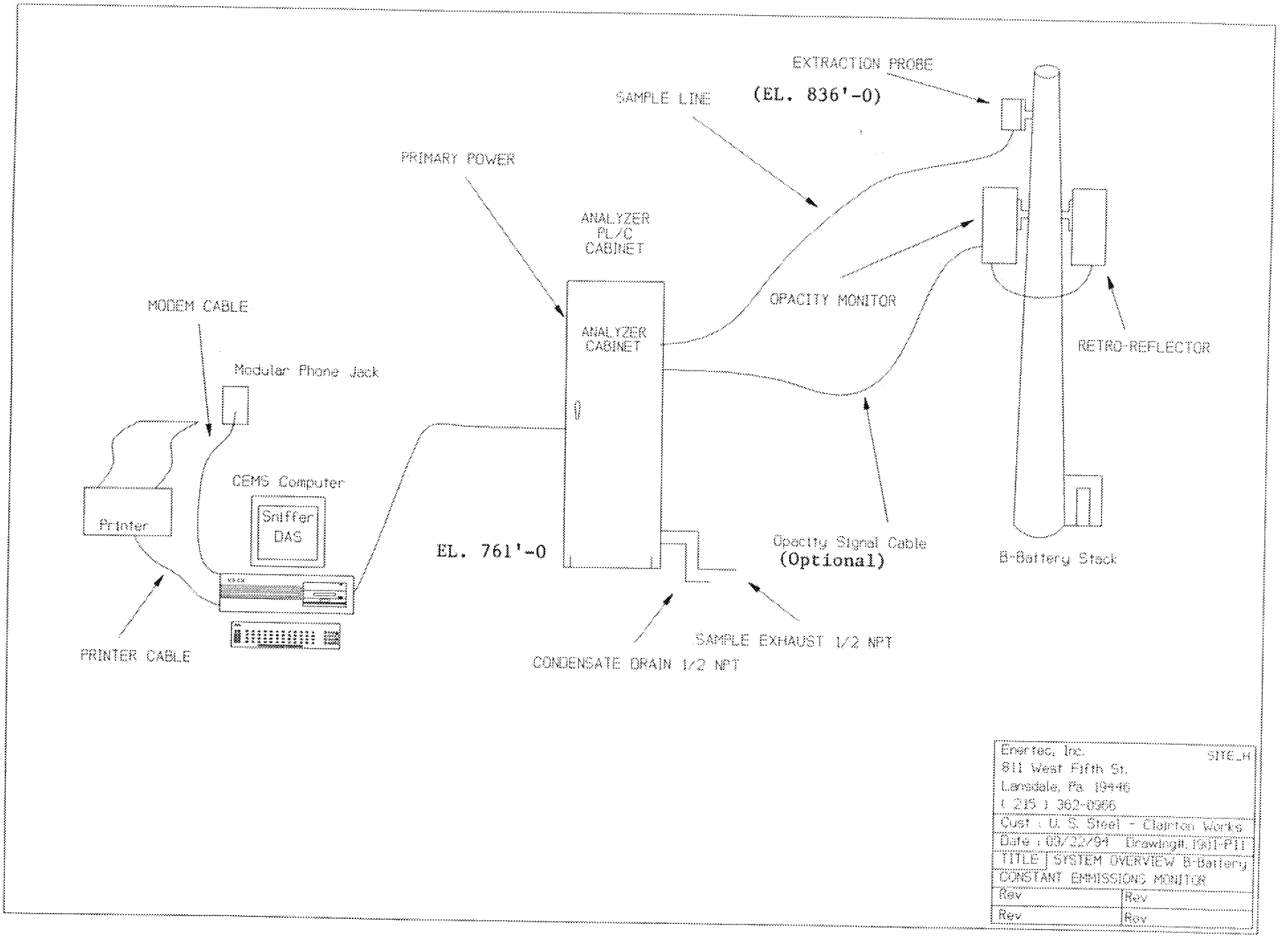
EXTRACTION PROBE
(EL. 836'-0)
SAMPLE LINE
PRIMARY POWER
ANALYZER
PLC
CABINET
ANALYZER
CABINET
OPACITY MONITOR
RETRO-REFLECTOR
MODEM CABLE
Modular Phone Jack
CEMS Computer
Sniffer
DAS
Printer
EL. 761'-0
Opacity Signal Cable
(Optional)
B-Battery Stack
PRINTER CABLE
CONDENSATE DRAIN 1/2 NPT
SAMPLE EXHAUST 1/2 NPT
Enertec, Inc.
811 West Fifth St.
Lansdale, Pa. 19446
(215) 362-0966
SITE_H
Cust : U. S. Steel - Clairton Works
Date : 09/22/94 Drawing#: T&T-P11
TITLE SYSTEM OVERVIEW B-Battery
CONSTANT EMMISSIONS MONITOR
Rev
Rev
Rev
Rev

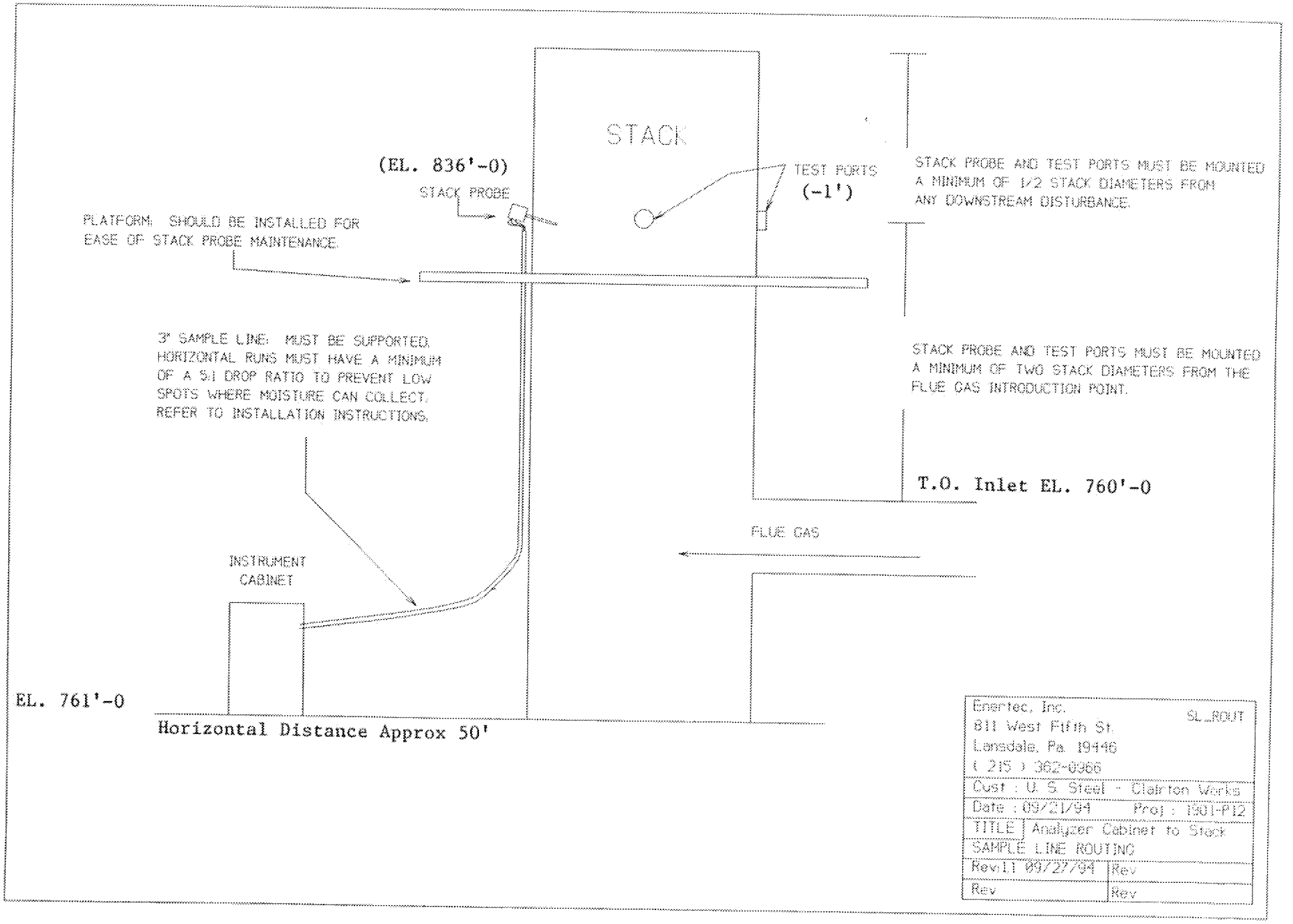
STACK
(EL. 836'-0)
STACK PROBE
TEST PORTS
(-1')
STACK PROBE AND TEST PORTS MUST BE MOUNTED A MINIMUM OF 1/2 STACK DIAMETERS FROM ANY DOWNSTREAM DISTURBANCE.
PLATFORM: SHOULD BE INSTALLED FOR EASE OF STACK PROBE MAINTENANCE.
3" SAMPLE LINE: MUST BE SUPPORTED. HORIZONTAL RUNS MUST HAVE A MINIMUM OF A 5:1 DROP RATIO TO PREVENT LOW SPOTS WHERE MOISTURE CAN COLLECT. REFER TO INSTALLATION INSTRUCTIONS.
STACK PROBE AND TEST PORTS MUST BE MOUNTED A MINIMUM OF TWO STACK DIAMETERS FROM THE FLUE GAS INTRODUCTION POINT.
T.O. Inlet EL. 760'-0
FLUE GAS
INSTRUMENT CABINET
EL. 761'-0
Horizontal Distance Approx 50'
Enertec, Inc.
811 West Fifth St.
Lansdale, Pa. 19446
(215) 362-0966
SL_ROUT
Cust : U. S. Steel - Clairton Works
Date : 09/21/94
Proj : 1501-P12
TITLE
Analyzer Cabinet to Stack
SAMPLE LINE ROUTING
Rev.LT 09/27/94
Rev
Rev
Rev

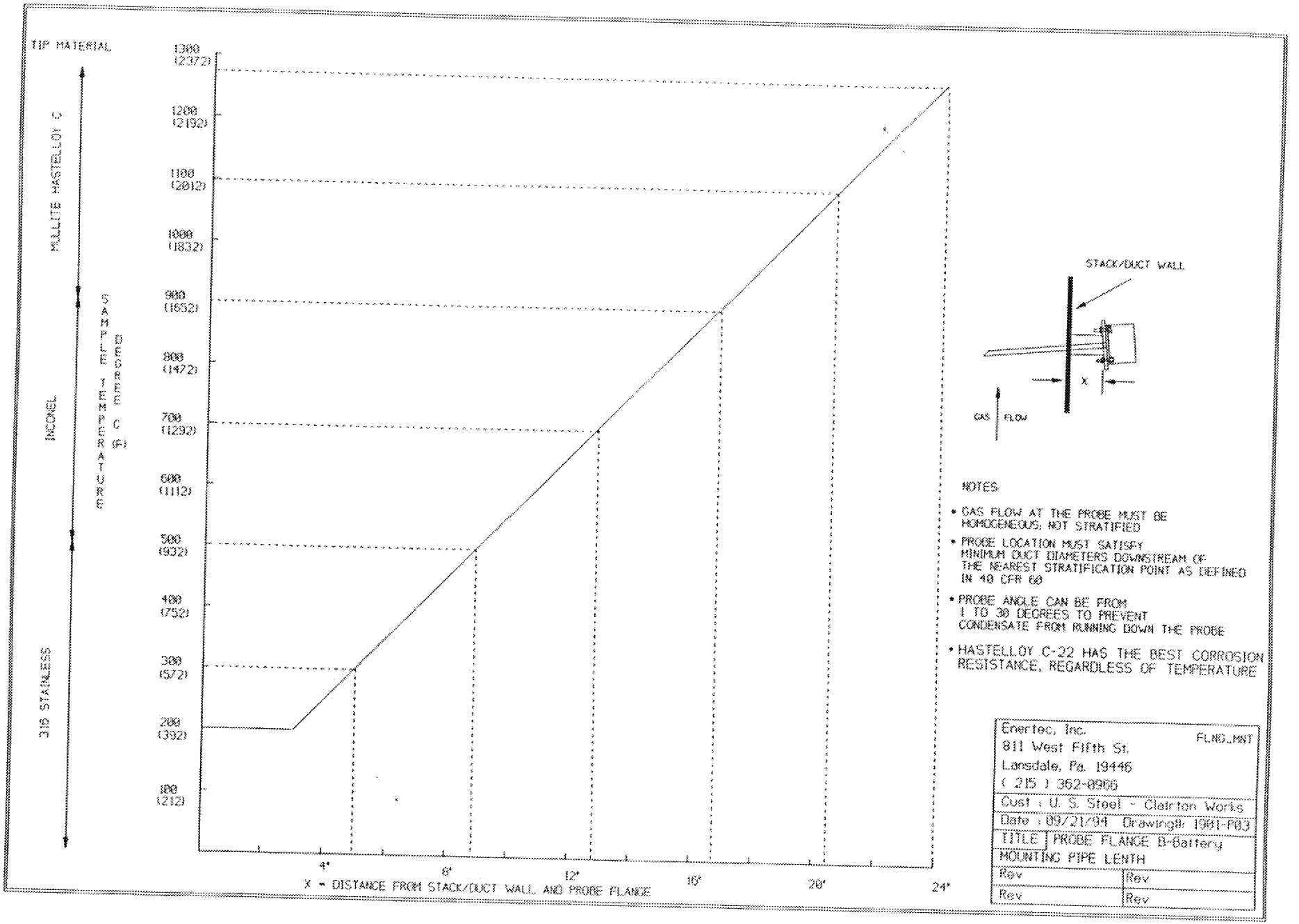
TIP MATERIAL
MULLITE HASTELLOY C
INCONEL
316 STAINLESS
SAMPLE TEMPERATURE DEGREE C (F)
1300 (2372)
1200 (2192)
1100 (2012)
1000 (1832)
900 (1652)
800 (1472)
700 (1292)
600 (1112)
500 (932)
400 (752)
300 (572)
200 (392)
100 (212)
4"
8"
12"
16"
20"
24"
X - DISTANCE FROM STACK/DUCT WALL AND PROBE FLANGE
STACK/DUCT WALL
X
GAS FLOW
NOTES:
• GAS FLOW AT THE PROBE MUST BE HOMOGENEOUS; NOT STRATIFIED
• PROBE LOCATION MUST SATISFY MINIMUM DUCT DIAMETERS DOWNSTREAM OF THE NEAREST STRATIFICATION POINT AS DEFINED IN 40 CFR 60
• PROBE ANGLE CAN BE FROM 1 TO 30 DEGREES TO PREVENT CONDENSATE FROM RUNNING DOWN THE PROBE
• HASTELLOY C-22 HAS THE BEST CORROSION RESISTANCE, REGARDLESS OF TEMPERATURE
Enertec, Inc.
811 West Fifth St.
Lansdale, Pa. 19446
(215) 362-0966
FLNG_MNT
Cust : U. S. Steel - Clairton Works
Date : 09/21/94 Drawing#: 1961-P03
TITLE PROBE FLANGE B-Battery
MOUNTING PIPE LENTH
Rev
Rev
Rev
Rev

APPENDIX E Equations and calculations

F Calculations for Emissions

1. Mass Emission Calculations

Method 19 & 20 are used to calculate the mass emission output for CO (lb/MMBTU), CO (lb/hr), NOx (lb/MMBTU) and NOx (lb/hr).

This document contains several calcuations needed to calculate a quantitative measurement of an emission.

The references for these calcuations are found in 40CFR60 Appendix A. Method 19 and 20.

2. Conversion factor(s) used to determine Concentration (C_d)

From	To	Multiply by
ppm NOx	lb/scf	1.194×10^{-7}

3. Dry Fuel factor(s) F_d (Method 19, table 19-1) :

Fuel (F_d)	dscf per MMBTU
Coke oven Gas	Determined on a real time basis from gas analysis

G Thermal input:

Using the fuel input flow rate and the fuel heat content factor, the "Thermal Input" TI (MMBTU/hr) factor can be calculated.

The units are Standard Cubic Feet (SCF), Million Btu's (MMBtu's) and Heating Value measured as MMBtu's per SCF of fuel (HV).

The two fuels used are natural gas and #2 fuel oil. Their high heating values (HHV) are:

Fuel	HHV
Coke Oven Gas	(to be supplied)

The equations are as follows.

example for using an HHV of 1,040:

TI (MMBTU/hr) = (Fuel flow (dscf/hr) * HHV (BTU/dscf)) * 10^{-6} MMBTU/BTU

420 MMBtu/hr = (403,846 (dscf/hr) * 1,040) * 10^{-6}

1. Calculation from E (lbs/MMBTU) with O_2 diluent:

The references for this calcuation are found in 40CFR60 Appendix A. Method 19 equation 19-1 and Method 20 equation 20-6.

example:

$$E\ (lbs/MMBTU) = (C_d * F_d) * [20.9 / (20.9 - O_2)]$$

Assume current O_2 value is 14.0% and NOX value is 18ppm (not corrected for O_2). Also assume the fuel burned is natural gas with a fuel factor of 8710.

$$E\ (lbs/MMBTU) = C_d \qquad F_d \qquad O_2\ comp.$$

$$0.05700 \quad (lbs/MMBTU) = (18ppm * (1.194 * 10^{-7})) * 8.710 * [20.9/(20.9 - 14.0)]$$

Where:

E (lbs/MMBTU) = Calculated emission rate in lbs/MMBTU

C_d = Pollutant reading in lbs/scf

C_d (for NOx) = [NOx (ppm) * 1.194 * 10^{-7}]

F_d = Fuel factor (from table)

2. Calculation for E (lbs/hr):

E (lbs/hr) = E (lbs/MMBTU) * TI (MMBTU/hr)

APPENDIX H Oxygen Analyzer Manufacturer Specifications

SERVOMEX 1400B LIGHT INDUSTRIAL GAS ANALYSER

Servomex
LEADERS IN GAS ANALYSIS

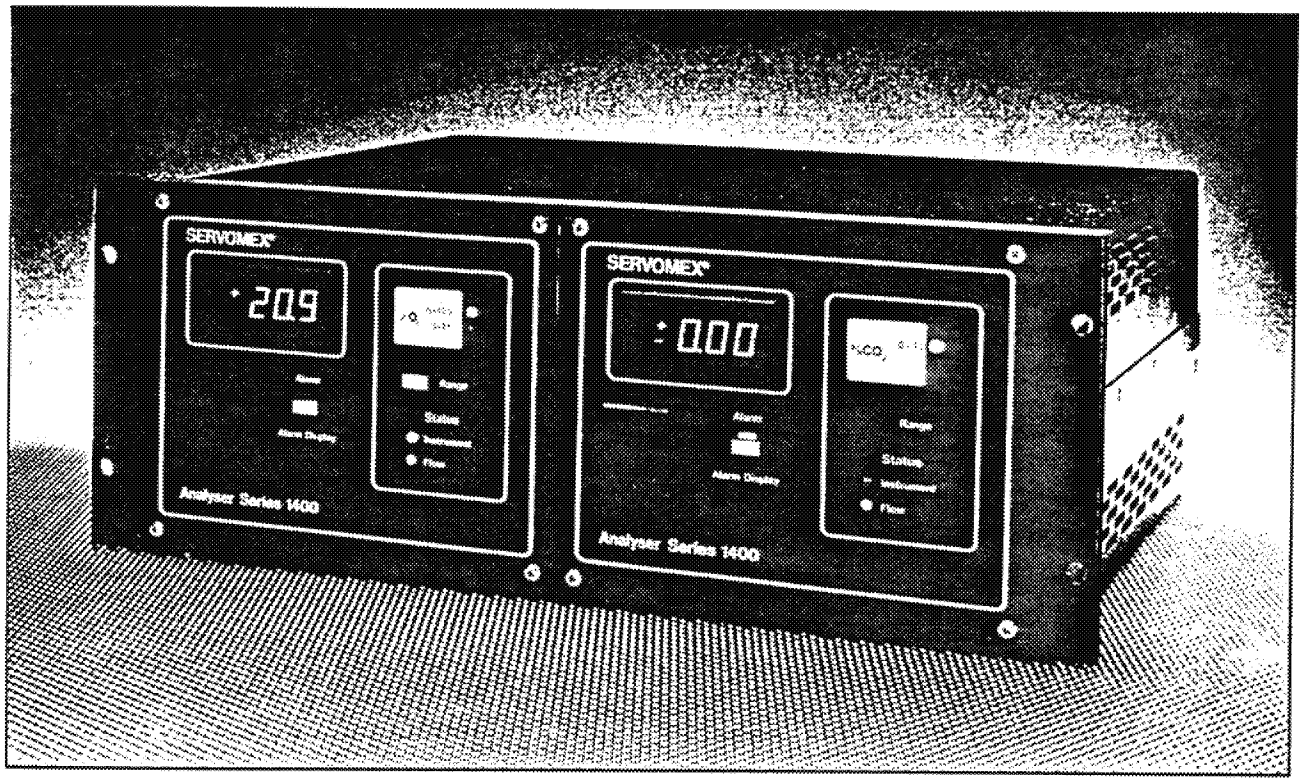

FEATURES	BENEFITS
● Paramagnetic Oxygen and Infrared Transducers	Suitable for a wide range of applications
● 19" Rack, Panel Mount and Bench-Top Cases	Meets User's configuration requirements
● Voltage and Current Outputs	Interfaces with the user's data recording device

Introduction to 1400B Series

The Servomex 1400B Series meets the light industrial market's requirement for a moderately priced, high performance, general purpose analyser.

Servomex offers the 1400B in three user selected case configurations: 19" rack mounting, panel mounting and bench-top. The above picture shows a dual unit 1400B in a 19" rack mounting case.

The 1400B Series features high visibility LED displays, dual linear electrical outputs: 0-1VDC non-isolated, and 4-20mA isolated, dual concentration alarms and (for non flammable samples) flow alarm all as standard.

A back pressure regulator option is available on standard 1400B analysers to reduce the effects of barometric or sample vent pressure changes when the 1400B is used for measuring high concentrations of oxygen or other gases.

The 1400B Series now offers three types of transducers, each meeting a requirement of the light industrial market:

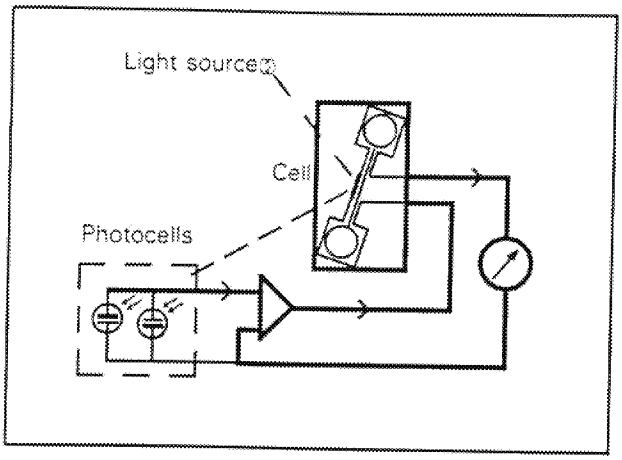

Magneto-dynamic Paramagnetic Oxygen Transducer

A magneto-dynamic paramagnetic oxygen transducer (shown above) provides excellent accuracy between 0.1 and 100% oxygen, fast response and the capability of measuring oxygen in the presence of hydrocarbons.

Unlike fuel cell oxygen sensors, the Servomex sensor is unaffected by acid gases, cannot be poisoned and has an unlimited life. Since oxygen is one of only a few gases that exhibit paramagnetism (attraction by a magnetic field) this sensor is highly specific to oxygen when measured in a wide variety of background gases.

The paramagnetic oxygen transducer is maintained above ambient temperature to increase temperature stability.

The 1400B is also available in a version suitable for the analysis of oxygen in flammable samples.

New Single-Beam, Single Wavelength Infrared Transducer

Servomex offers a full range of new single-beam, single wavelength IR transducers for CO_2 analysis in non-flammable gases (See diagram).

The wide choice of full scale ranges ensures that an IR transducer can be chosen which gives maximum sensitivity and accuracy for the user's application. Other gases will be added to this new transducer's capabilities.

A sealed, pulsed, infrared source and narrow bandpass filter replace the traditional chopper motor and dual filters used in most conventional IR benches. This reduces the unit's cost while

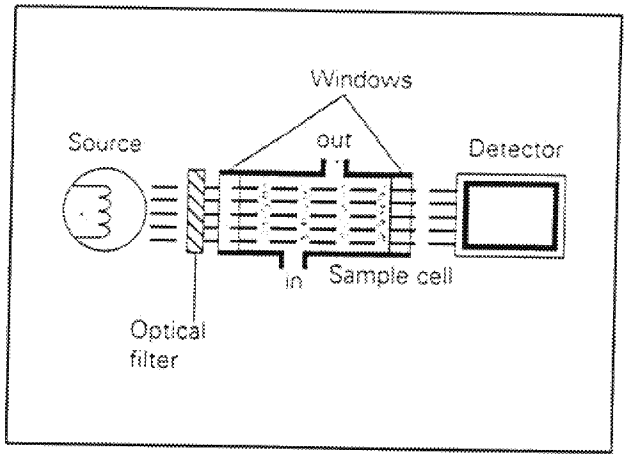

providing increased reliability and reduced maintenance by elimination of moving parts.

For increased measurement stability, the cell is heated and temperature controlled to 60°C.

Single-Beam, Dual Wavelength Infrared Transducer

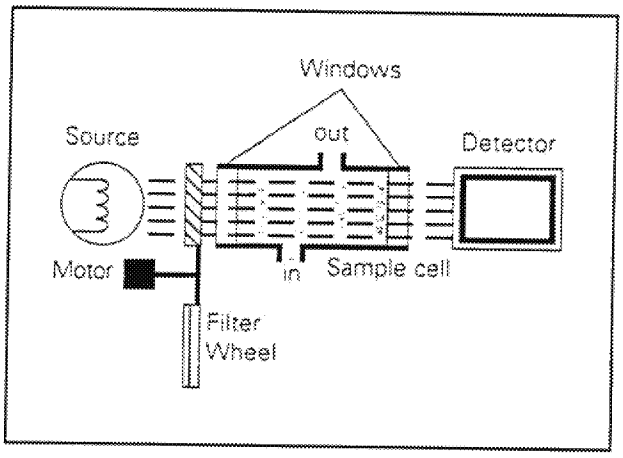

A single-beam, dual wavelength IR transducer (shown above) is offered for the analysis of gases other than CO_2 and for CO_2 in flammable and toxic samples. Common measurements with this transducer include CH_4, CO, solvents, and SF_6. The transducer has excellent long term stability and high rejection of common mode errors introduced by obscuration of the cell end windows.

The user may select a full scale range that fits his application.

Options offered with this bench are dual ranges and hard piping for flammable gas analysis.

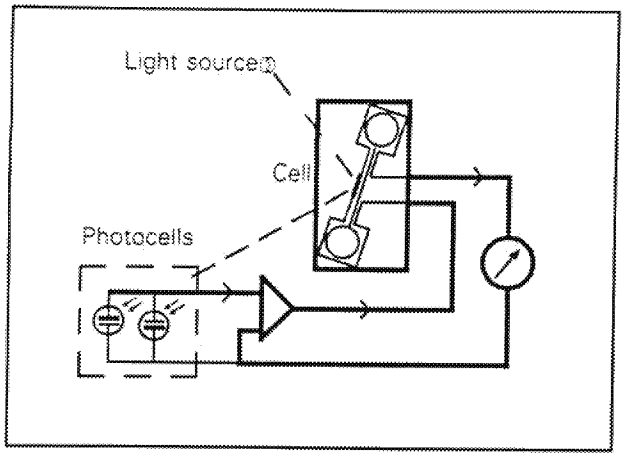

Magneto-dynamic Paramagnetic Oxygen Transducer

A magneto-dynamic paramagnetic oxygen transducer (shown above) provides excellent accuracy between 0.1 and 100% oxygen, fast response and the capability of measuring oxygen in the presence of hydrocarbons.

Unlike fuel cell oxygen sensors, the Servomex sensor is unaffected by acid gases, cannot be poisoned and has an unlimited life. Since oxygen is one of only a few gases that exhibit paramagnetism (attraction by a magnetic field) this sensor is highly specific to oxygen when measured in a wide variety of background gases.

The paramagnetic oxygen transducer is maintained above ambient temperature to increase temperature stability.

The 1400B is also available in a version suitable for the analysis of oxygen in flammable samples.

New Single-Beam, Single Wavelength Infrared Transducer

Servomex offers a full range of new single-beam, single wavelength IR transducers for CO_2 analysis in non-flammable gases (See diagram).

The wide choice of full scale ranges ensures that an IR transducer can be chosen which gives maximum sensitivity and accuracy for the user's application. Other gases will be added to this new transducer's capabilities.

A sealed, pulsed, infrared source and narrow bandpass filter replace the traditional chopper motor and dual filters used in most conventional IR benches. This reduces the unit's cost while

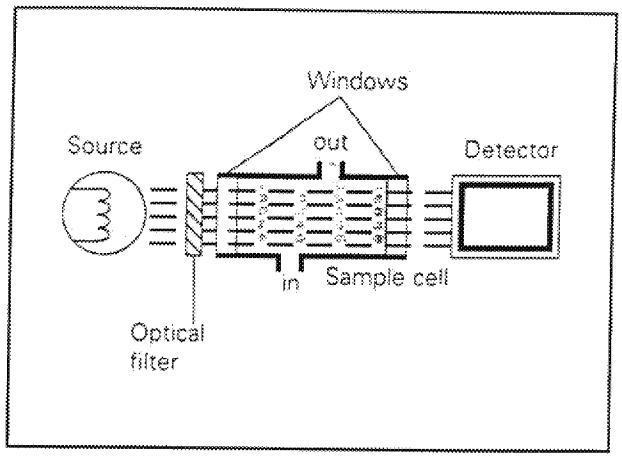

providing increased reliability and reduced maintenance by elimination of moving parts.

For increased measurement stability, the cell is heated and temperature controlled to 60°C.

Single-Beam, Dual Wavelength Infrared Transducer

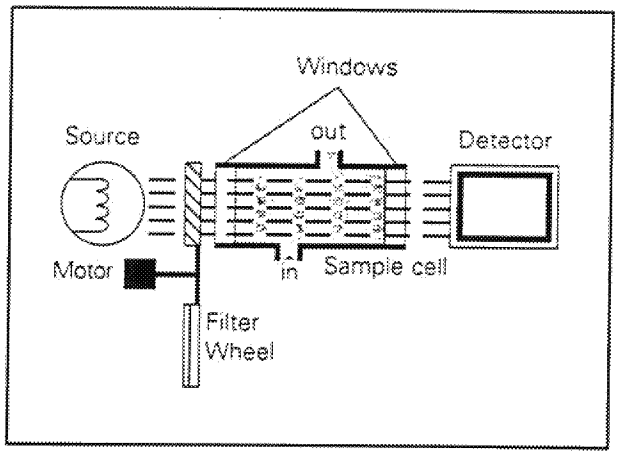

A single-beam, dual wavelength IR transducer (shown above) is offered for the analysis of gases other than CO_2 and for CO_2 in flammable and toxic samples. Common measurements with this transducer include CH_4, CO, solvents, and SF_6. The transducer has excellent long term stability and high rejection of common mode errors introduced by obscuration of the cell end windows.

The user may select a full scale range that fits his application.

Options offered with this bench are dual ranges and hard piping for flammable gas analysis.

TYPICAL APPLICATIONS

	O_2	CO_2	CO	CH_4	FREONS	SOLVENTS AND HYDROCARBONS	SF_6
Respiratory Physiology	●	●					
Exercise Machines	●	●					
Lung Function Research	●	●					
Diving Bells	●	●					
Decompression Chambers	●	●					
Agriculture/Horticulture	●	●		●			
Food/Plant Growing	●	●		●			
Green Houses	●	●					
Fruit Stores	●	●					
Mushroom Farms	●	●					
Animal Husbandry	●	●					
Off Gases in Silos/ Storage Chambers	●	●					
Food Industry	●	●					
Food Packaging	●	●					
Food Manufacture	●	●					
Fermentation Processes	●	●					
Others							
Synthetic Fibres						●	
Plastic Films						●	
Landfill Gas		●		●			
Ventilation Control	●	●					
Refrigeration					●		
Exhaust Emission Testing	●	●	●				
Heat Treatment		●	●	●			
Gas Manufacture/Mixing	●	●		●		●	
Pharmaceutical/ Fine Chemicals	●	●					
Bio-Engineering	●	●		●			
Switchgear Manufacture							●
Combustion Processes	●	●	●				
Research Laboratories	●	●	●	●	●	●	

SPECIFICATIONS

Parameter	Conditions / Comments	PARAMAGNETIC O_2 FLS	PARAMAGNETIC O_2 STD	INFRARED CO_2 STD	INFRARED SPX NonFlam,NonTox	INFRARED SPX Flam/Tox
Performance						
Measurement Principle		Magneto-dynamic Paramagnetic		Single beam,single wavelength IR	Single beam, dual wavelength IR	
Repeatability	at the 1V output, constant conditions	±0.1% O_2		±1%FS ±3%reading	±1% FS	
Temperature Coefficient	for 10°C change within the specified ambient temperature range	±0.05% O_2 ±0.3% reading			±2% FS ±4% reading	
Response Time (90%)	a) inlet pressure & flow in specified range b) at point when flow alarm trips	typically less than 10 sec		approximately 50 sec	typically 30 sec	
Linearity	maximum error from best straight line	±0.1% O_2			±1% FS	
Effects of Atmospheric Pressure	a) direct vent to atmosphere b) nominal with back pressure regulation	directly proportional		0.15% reading per mbar (within specified range)		
Warm-up Time	typical at 20°C ambient temperature	0.02% reading/mbar		0.03% reading/mbar 1 hour		
Outputs						
Digital Reading	$3^1/_2$ digit green LED display + overrange	0.0 to 100.0% O_2		display resolution optimised for specified range		
1V Output		non-isolated, nominal o/p impedance 470 ohms			isolated o/p impedance < 1 ohm	
4-20mA (Isolated)		maximum load 600 ohms			maximum load 500 ohms	
Ranges		2 ranges from: 5, 10, 20, 25, 50, 100% User Configurable		1 range from: 1, 2, 5, 10, 25, 50, 100%	dual range (optional) Specified at time of order	
Alarms						
Flow Fail	change over relay contacts rated 1A/ 110VAC or 1A/28VDC non-inductive	none	dedicated SPCO relay		See below	none
Concentration Level	change over relay contacts rated 1A/ 110VAC or 1A/28VDC non-inductive	2 SPCO relays can be configured to high or low alarms, operating over the full scale of the unit			a 4-pole changeover relay configurable to one or more of: flow, concentration or instrument failure alarms	
Local Indication	red LED lamps flash when alarm active	individual concentration level & flow alarm indication				
Materials Exposed to Sample						
			stainless steel			
			Viton/fluorocarbon rubber			
		platinum, nickel, borosilicate glass		sapphire epoxy resin	silicone rubber	CaF_2 or sapphire
		bonded glass fibre, nylon, neoprene, gold on silver, brass, monel, polypropylene, ruby, acetyl resin				
Additional with Back Pressure Option		copper, PVC, PVDF, berilium copper				

14/1/94

Parameter	Conditions / Comments	O_2 FLS	O_2 STD	CO_2 STD	SPX	SPX
Environmental						
Operating Ambient Temperature	a) Single or dual case b) Fitted into bench-top case		0-45°C (32-113°F) 0-40°C (32-104°F)		0-40°C (32-104°F) 0-35°C (32-95°F)	
Sensor / Transducer Temperature	nominal control temperature		50°C	60°C		
Storage Temperature			-20°C to +70°C (-4°F to 158°F)			
Relative Humidity			0-90% non-condensing		5 to 85% non-condensing	
AC Power Supply			88-264V 47-63Hz, 45VA max.		120 or 240VAC±10% 48 to 62Hz 30VAmax	
EMC	Designed for compliance with:		EN 50022 (1987) CLASS A for conducted interference and radiated electric field			
Vibration			Protect from excessive vibration			
Sample Requirements						
Condition			Clean, dry gas with dew point at least 5°C below ambient temperature non-toxic, non-flammable			
Inlet Pressure / Flow Rate	Refer to flow schematics overleaf:	See schematic a	See schematics b & c		See schematic d	
Flammable Gases	ISA-S12.12 (1984) BS5345, Part 1 (1976)	groups B,C,D T3 group IIC, T3		Not Applicable Not Applicable		groups C and D, T4 groups IIA and IIB, T4
Filtering	SPX & FLS require external 0.6 micron filter		0.6 micron replaceable		0.6 micron	
Gas Connection	located at the rear of the unit	3.2mm(1/8")OD stub	6.4mm (1/4 inch) O.D. tube stub suitable for 1/4 inch compression fittings			
Physical Characteristics						
Case	a) Description b) Classification		Steel and aluminium, finished in epoxy powder paint IP20 (IEC 529) when fitted in the 19 inch rack case			
Overall Dimensions	a) Double case 4U b) Single case 4U c) Bench-top case d) Back pressure option		178mm high x 483mm wide x 380mm deep 182mm high x 256mm wide x 420mm deep 228mm high x 520mm wide x 400mm deep depth becomes 460mm approx.			
Weight	single unit double unit bench unit		5.5kg (12lb) typical 12kg (26lb) typical 20kg (44lb) typical			
Unit Identification	Rear panel serial no.	1421B NNN	1420B NNN	1415B NNN	1410B NNN	1411B NNN

The Company reserves the right to alter the specification without prior notice.

ED_002508A_00000309-00036

FLOW SCHEMATICS

(a) Sample Vent Direct to Atmosphere (FLS)

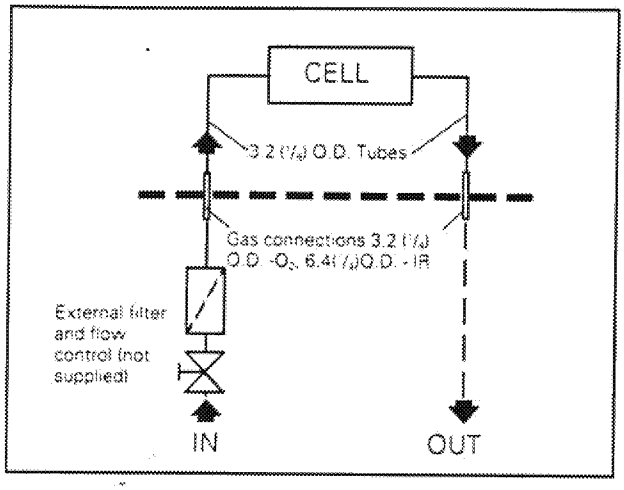

Flow:
User limited/controlled to 250ml min^{-1} max.
Flow Effect:
Less than 0.5% of O_2 reading change for flow change from 50 to 250 ml min^{-1}
Inlet pressure:
Typically 0.3kPag (3cmWG) at 200ml min^{-1}
Atmospheric pressure effect:
Oxygen reading is directly proportional to barometric pressure

(b) Sample Vent Direct to Atmosphere (STD)

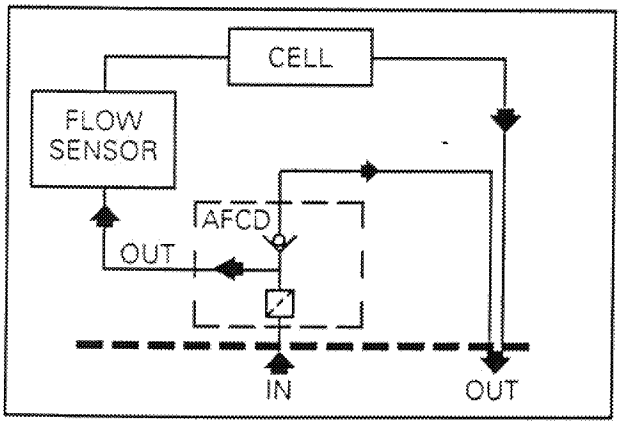

Flow:
Typically 1 to 6l min^{-1}, dependent upon inlet pressure
Inlet pressure:
7 to 70kPag (1 to 10psig)
Inlet pressure effects:
Pressure changes over the entire inlet pressure range will cause the reading to change by less than 0.2% O_2 or 1% of CO_2 reading
Barometric pressure effects:
O_2 reading is directly proportional to barometric pressure; CO_2 changes by 1.5% reading per kPa
Atmospheric (vent) pressure range:
CO_2 units 90 to 110kPaa(0.9 to 1.1 bara); O_2 units 80 to 110kPaa(0.8 to 1.1 bara)

(c) Sample Vent Via Back Pressure Regulator (STD)

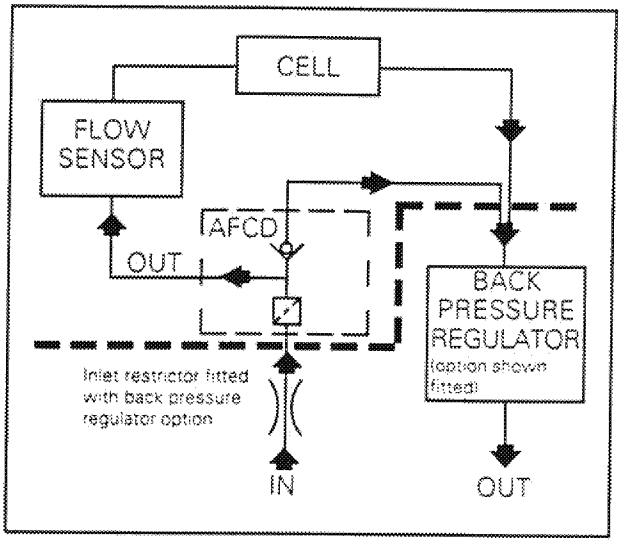

Inlet pressure:
Typically 120 to 140kPaa (to achieve inlet flow within the range 1 to 2 l min^{-1}
Flow effects:
Flow changes over the specified range will change the O_2 reading by less than 0.2%O_2 and the CO_2 by less than 1% of the CO_2 reading
Barometric pressure effects:
Reading changes by typically 0.25% of reading per kPa (0.025% of reading per mbar)
Atmospheric (vent) pressure:
108kPaa max.

(d) SPX Vent Direct to Atmosphere (SPX)

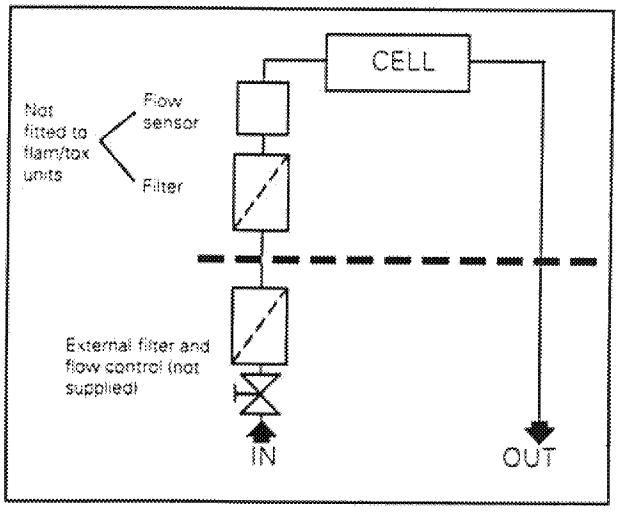

Flow:
User regulated within the range 0.1 to 1.0 lmin^{-1}
Atmospheric (vent) pressure:
90 to 110kPaa
Atmospheric pressure effect:
Approx. 1.5% reading per kPa

MOUNTING DETAILS

Double Unit Case

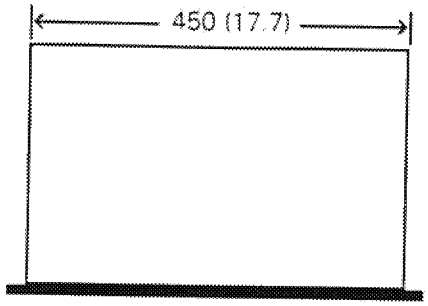

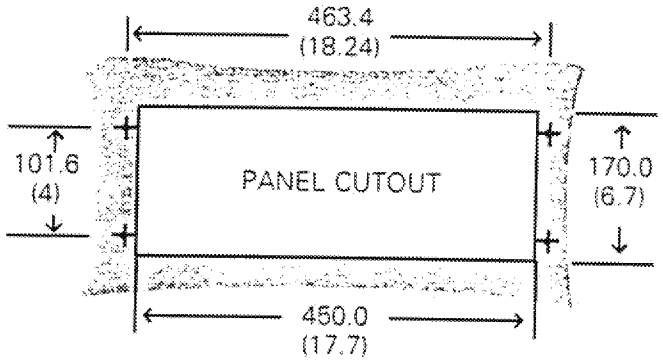

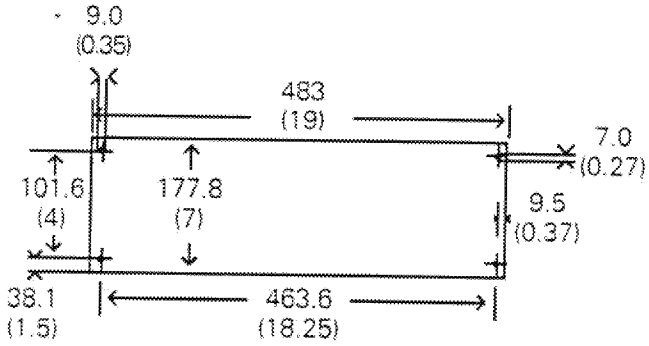

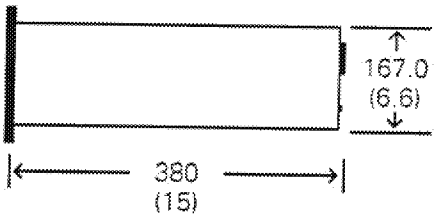

Single Unit Case (supplied with handles and rubber feet)

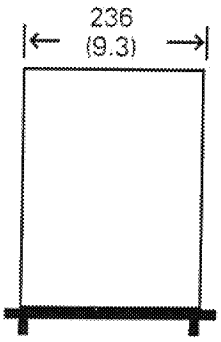

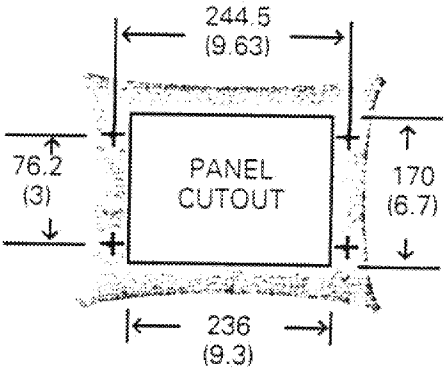

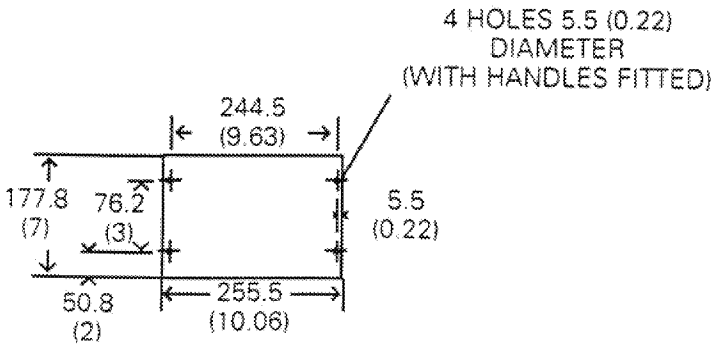

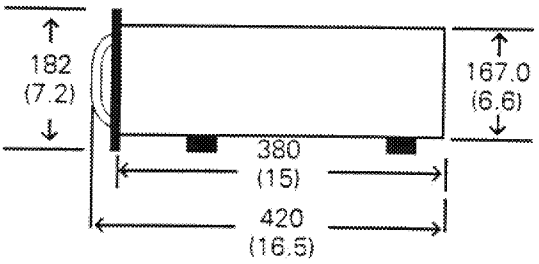

ALL DIMENSIONS IN mm/inches

1400 ORDERING CODE

Analyser 1400B4

Type Specification

		Standard STD	Flammable Sample FLS	Special Applications SPX
F1 Left hand unit	O_2 unit (standard)	10		
	O_2 unit (flammable)		11	
	CO_2 unit 1% FS	23		
	CO_2 unit 2% FS	24		
	CO_2 unit 5% FS	25		
	CO_2 unit 10% FS	26		
	CO_2 unit 25% FS	27		
	CO_2 unit 50% FS	28		
	CO_2 unit 100% FS	29		
	Special IR Non Flammable/Non Toxic Sample			91
	Special IR Flammable/Toxic Sample			92
	Blank panel	99	99	
F2 Right hand unit	Single unit	00	00	00
	O_2 unit (standard)	10		10
	O_2 unit (flammable)		11	11
	CO_2 unit 1% FS	23		
	CO_2 unit 2% FS	24		
	CO_2 unit 5% FS	25		
	CO_2 unit 10% FS	26		
	CO_2 unit 25% FS	27		
	CO_2 unit 50% FS	28		
	CO_2 unit 100% FS	29		
	Special IR Non Flammable/Non Toxic Sample			91
	Special IR Flammable/Toxic Sample			92
	Blank panel	99	99	99
F3 Back pressure regulator	None	0	0	0
	Left hand and single units	1		
	Right hand unit	2		
	Right and left hand units	3		
F4 Instrument case	Double unit case	1	1	1
	Single unit case	2	2	2
	Double bench-top case	3	3	3
F5 Manual (operator)	English	1	1	1
	French } Reserved	2	2	2
	German } Reserved	3	3	3
F6 Manual (service)	None	0	0	0
	English	1	1	1
	French } Reserved	2	2	2
	German } Reserved	3	3	3
F7 Supply voltage	240 VAC±10%, 48 to 62 Hz	–	–	1
	120 VAC±10%, 48 to 62 Hz			2

	1400B4	___	F1	F2	F3	F4	F5	F6	F7
Example:	1400B4	STD	10	26	0	1	1	0	-

Notes: 1) SPX units must be approved by Servomex applications. Refer to Servomex for details of gases and ranges measurable with SPX units.
2) Flammable and non-flammable sample units may not be paired in the same SPX analyser.

Certificate No. 35166
ISO 9001 (1987)

Servomex
LEADERS IN GAS ANALYSIS

Servomex plc, Jarvis Brook, Crowborough, East Sussex, TN6 3DU, England ☎ (44) 892 652181. Fax: (44) 892 662253
Servomex Company, Inc., 90 Kerry Place, Norwood, MA 02062, USA ☎ (1) 617-769-7710. Fax: (1) 617-769-2834
Servomex S.A.R.L., 9 Rue Proudhon, B.P. 50, 93212 La Plaine St Denis, France ☎ (33) 1-48 20 83 22. Fax: (33) 1-48 20 63 58
Servomex B.V., PO Box 406, 2700 AK Zoetermeer, Stephensonstraat 20, 2723 RN Zoetermeer, Netherlands ☎ (31) 79-41 71 41. Fax: (31) 79-42 08 19
Servomex Asia/Pacific Ltd, 5F-4, No. 328 Chang Chun Road, Taipei, Taiwan, R.O.C. ☎ (886) 2-718 0031. Fax: (886) 2-712 0653
CNTIC-Servomex Technical Centre, No.2 Sheng Gu Zhuang, Chaoyang Area Beijing, China, PO Box 1432, Beijing, Post Code 100029 ☎ (86) 1-426-9911, 2101. Fax: (86) 1-426-8694
Scottish Anglo Environmental Protection Ltd, Tees Offshore Base, Dockside Road, South Bank, Middlesbrough, Cleveland TS6 6UZ, England ☎ (44) 642 457771. Fax: (44) 642 458183

© Servomex plc. 1994. All rights reserved.

7991 - 3488 1/94

APPENDIX I NOx Analyzer Manufacturer Specifications

ED_002508A_00000309-00040

Thermo Environmental Instruments Inc.

MODEL 42 H

CHEMILUMINESCENCE NO-NO_2-NO_X ANALYZER

For Continuous Source Gas Monitoring

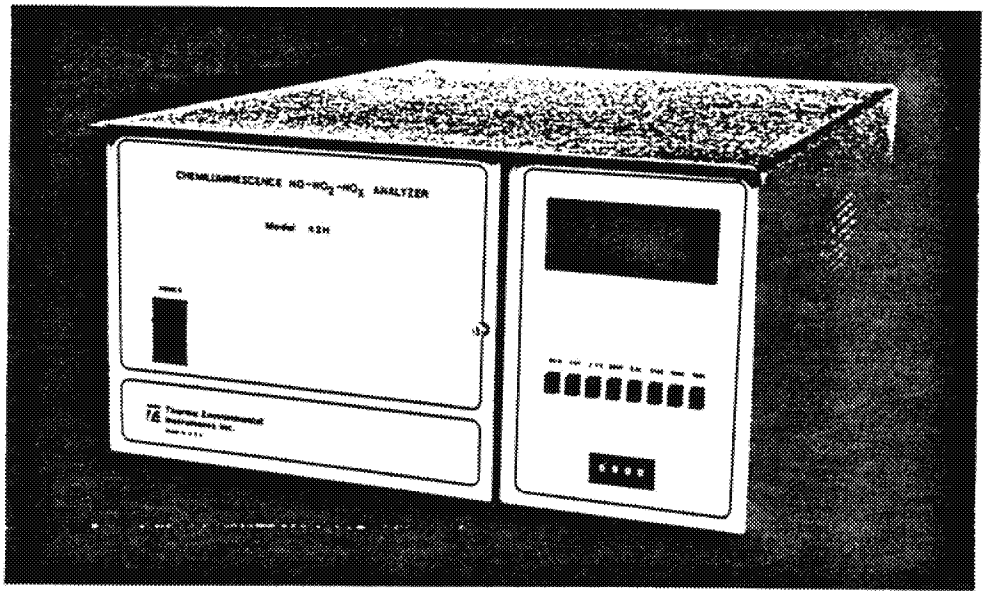

PERFORMANCE IS DESIGNED IN!

- MICROPROCESSOR BASED
- NINE (9) FIELD SELECTABLE RANGES
- CONTINUOUS OUTPUTS ON EACH CHANNEL
- EXTERNAL (OIL-LESS) VACUUM PUMP
- COMPACT SIZE
- PUSH BUTTON CALIBRATION
- USER FRIENDLY DIAGNOSTICS
- MANUAL AND AUTOMATIC MODES
- FRONT PANEL DISPLAY
- SELECTABLE TIME CONSTANTS

MODEL 42H NO-NO_2-NO_x ANALYZER

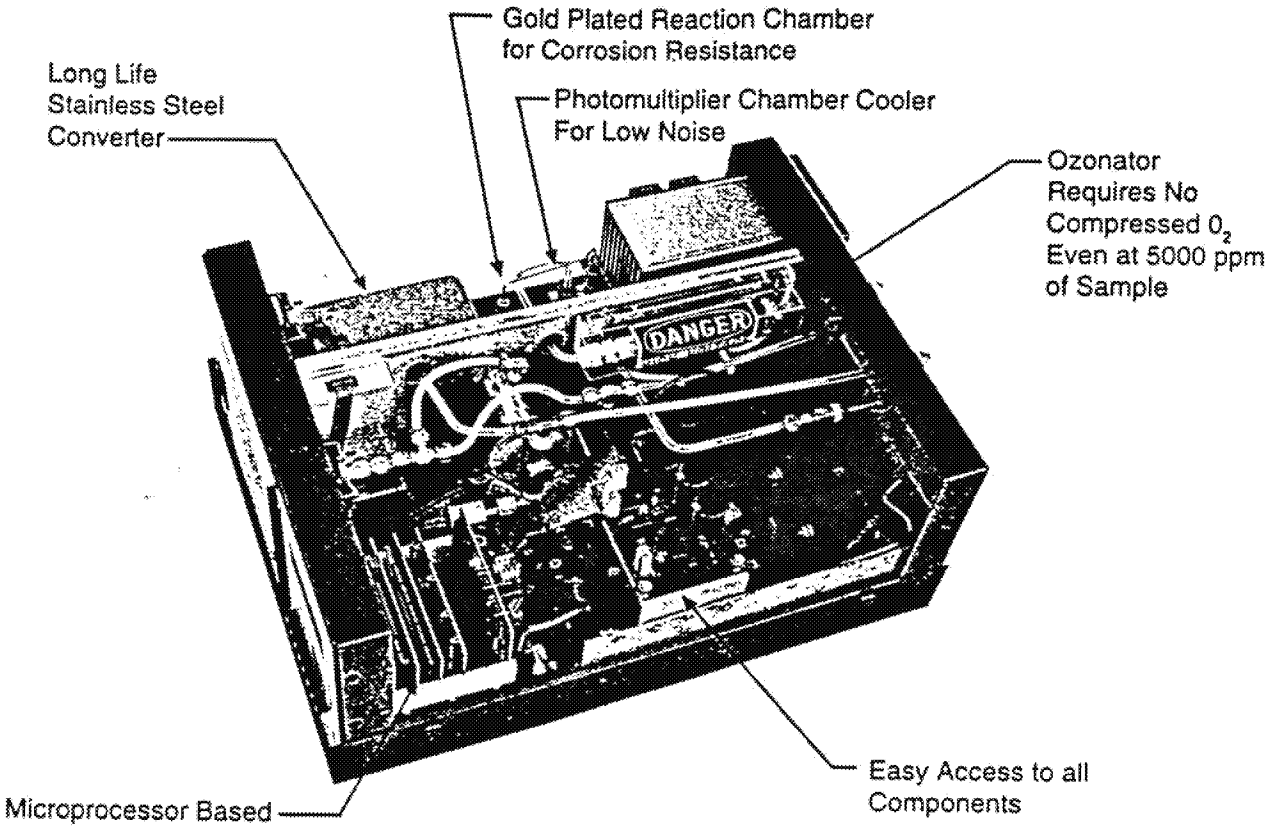

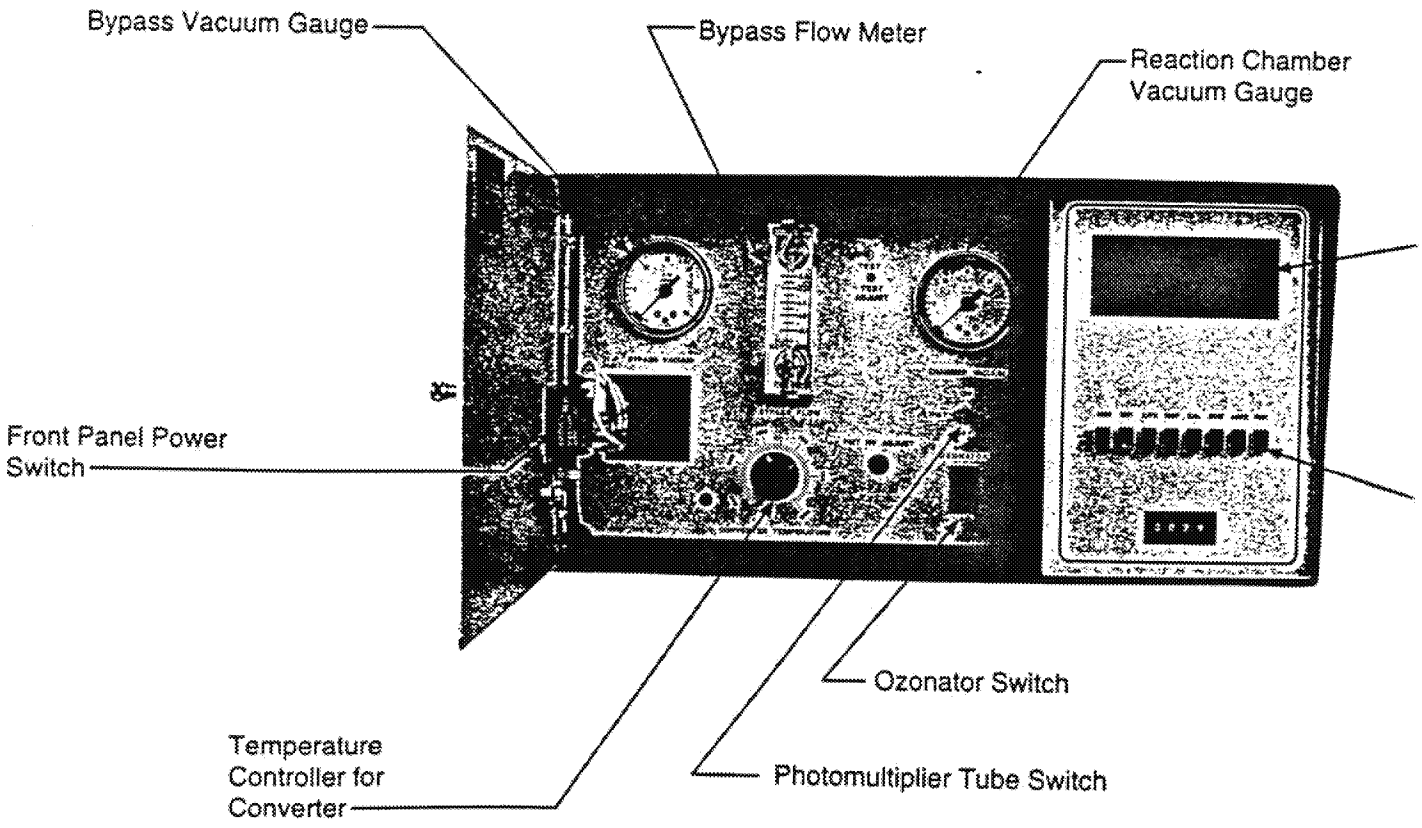

MODEL 42H SPECIFICATIONS

Ranges:	0-10, 20, 50, 100, 200, 500, 1000, 2000, 5000ppm
Noise:	25ppb
Detection Limit:	50ppb
Zero Drift (24-Hours):	50ppb
Span Drift (24-Hours)	±1% Full Scale
Rise Fall Times: (0-90%)	2.5 seconds NO Mode 5.0 seconds NO_x Mode
Linearity:	±1% Full Scale
Sample Flow Rate:	25 cc/min./with Bypass 2 SCFH
Vacuum:	28.5" Hg
Power Requirements:	500 watts. 115± 10 volts, 220± 20 volts, 50/60 Hz
Physical Dimensions:	17" (W) x 8¾" (H) X 23" (D)
Weight:	70 pounds, including pump
Outputs:	Selectable 0-10mv, 100mv, 1v, 5v, 10v, (optional) 4-20MA Isolated or RS-232

The Model 42H is Thermo Environmental Instruments' latest addition to its line of microprocessor based instrumentation. The Model 42H is a high level, fast response chemiluminescence instrument for N0, NO_2, and/or NO_x. Typical applications range from automotive exhaust analysis to source or stack measurements.

The Model 42H has full scale outputs from 10ppm to 5000ppm while using only dry air as the ozonator feed. Response times from 0.5 seconds to 300 seconds are available at the user's option.

A twin-headed diaphragm pump eliminates the need for oil changes typical of older analyzers. The unique two-piece reaction chamber construction offers ease in maintenance and service.

As always, Thermo Environmental Instruments is eager to offer assistance with its new Model 42H Chemiluminescence Analyzer. The Model 42H is expected to maintain TEI's position as the industry standard in high level NO_x measurements and applications.

—Easy to Read Display

— Push Button Calibration, Diagnostics, Ranges and More

OPTIONS

42-002— Rack Mounts

42-004— Regulated Bypass System

42-005— 4-20MA Isolated Output

42-006— Pressure Transducer

42-007— Ozone Particulate Filter

42-008— RS-232 Interface

42-009— Permeation Dryer

MODEL 42H FLOW DIAGRAM

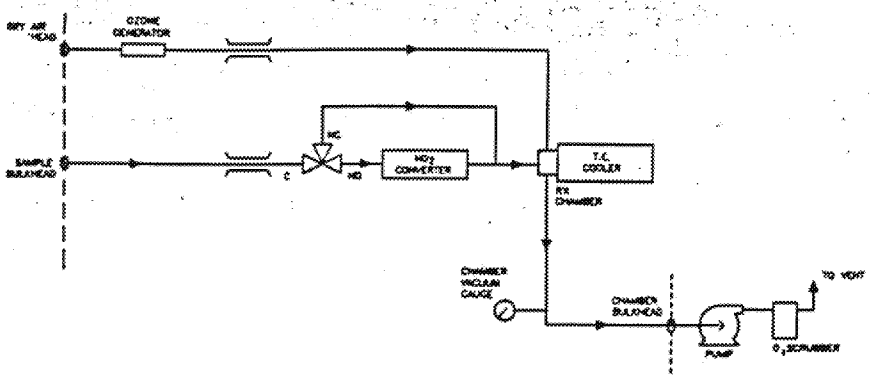

MODEL 42H: STANDARD CONFIGURATION

The Model 42H standard plumbing configuration is used in applications where ample amount of sample is present. The sample should be at a continuous stable flow. The analyzer is allowed to extract the sample as needed by use of a vented manifold system (atmospheric dump).

MODEL 42H: REGULATED BYPASS SYSTEM OPTION

The regulated bypass system is used when the sample must be transported over a long distance. It is also used when an unstable flow is being provided. The regulated bypass system provides make-up air thru the sample regulator in case of lack of sample to the reaction chamber. This unique feature avoids instrument drift due to pressure changes.

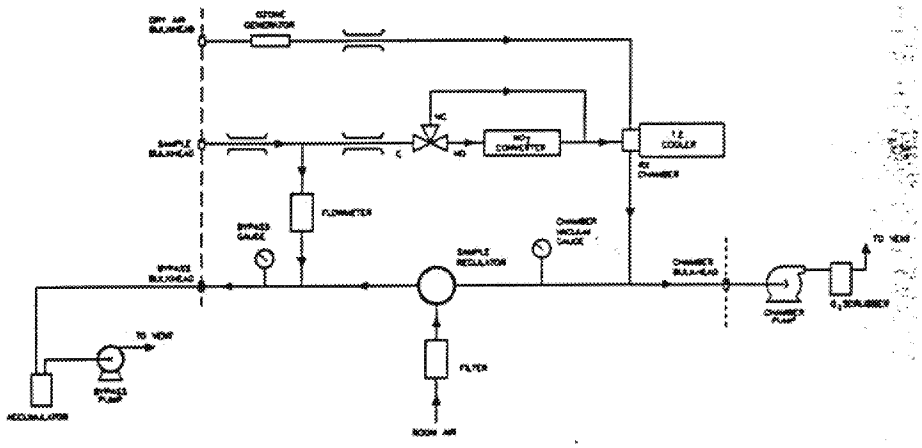

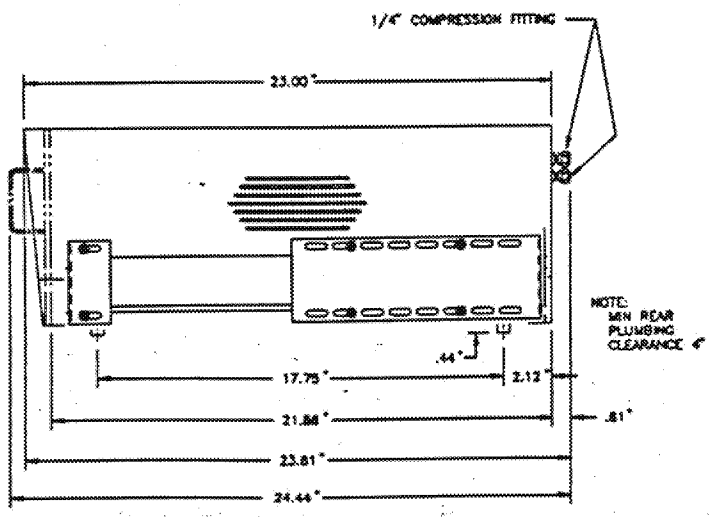

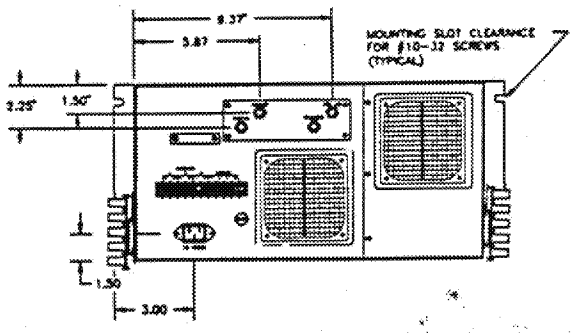

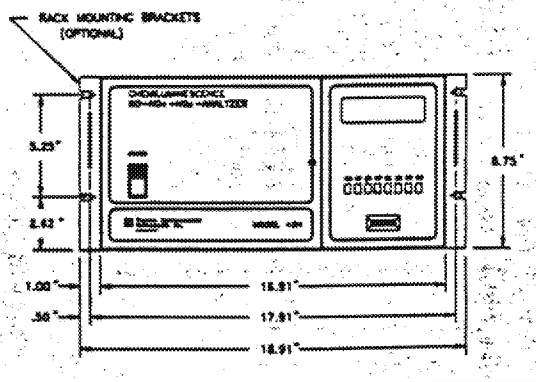

Installation Drawing - Including Rack Mount Slides (Optional)

Thermo Environmental Instruments Inc.

8 West Forge Parkway
Franklin, MA 02038

Tel: (508) 520-0430
Telex: 200205 THEMO UR

FAX: (508) 520-1460

Printed in the U.S.A. — 6/93 5M