# OFFICE OF THE NEVADA ENVIRONMENTAL RESPONSE TRUST TRUSTEE

**Le Petomane XXVII, Inc., Not Individually, But Solely as the Nevada Environmental Response Trust Trustee**
**35 East Wacker Drive - Suite 1550**
**Chicago, Illinois 60601**
**Tel: (312)498-2800**


August 30, 2016

VIA ELECTRONIC MAIL

Mr. James Dotchin
Bureau of Industrial Site Cleanup
Nevada Division of Environmental Protection
2030 E. Flamingo Rd, Suite 230
Las Vegas NV 89119

RE: Finding and Order Requiring Engineering Evaluation/Cost Analysis ("Order")
Nevada Environmental Response Trust
Henderson, Nevada
NDEP Facility ID #H-000539

Dear Mr. Dotchin:

As ordered by the Nevada Division of Environmental Protection (NDEP), this letter transmits the Nevada Environmental Response Trust's (NERT or the "Trust") Engineering Evaluation / Cost Analysis (EE/CA) for the treatment of groundwater extracted by the Southern Nevada Water Authority (SNWA) during SNWA's construction of the Sunrise Mountain Weir and Historic Lateral Weir, collectively, the "Weirs" (the "Proposed Action").

Consistent with prior direction received from NDEP, this EE/CA assumes that SNWA's dewatering of the Weirs may happen simultaneously at a combined rate not to exceed 6,900 gallons-per-minute (GPM). After an initial evaluation, it was determined that construction of a treatment system adjacent to each of the weirs (i.e. constructing and operating two 6,900 GPM facilities) was cost prohibitive. Therefore, this EE/CA presents only a single physical siting option with a single treatment system capable of treating 6,900 GPM located adjacent to Lift Station #1 associated with the current NERT Groundwater Extraction and Treatment System.

The Trust has identified four critical items that must be resolved prior to implementation of the Proposed Action:

1. As you are aware, NDEP has required the Trust have the treatment system ready to accept water by June 1, 2017, and that this date was dictated by SNWA as the earliest date that dewatering activities could commence. As you are also aware, while during a preliminary meeting with NDEP and the Trust, the United States Bureau of Reclamation (US BOR) indicated that it was their preference that all permits required by this Proposed Action on land subject to the jurisdiction of US BOR be facilitated by SNWA through its ongoing permitting process associated with the construction of the Weirs, revised direction was communicated to the Trust on August 29, 2016 indicating that this permitting is to be the Trust's responsibility. Acknowledging the above, the Trust has determined that all permitting and access need to be granted prior to January 7, 2017 to enable readiness of the treatment system by June 1, 2017. Consistent with direction received from NDEP, the Trust will immediately engage with US BOR on all applicable permits.



ED_002461_00004015-00001

2. The Trust will require finalization of a National Pollutant Discharge Elimination System (NPDES) permit prior to completing the design of the treatment system as the various technical criteria defined in the NPDES permit will play a critical role in this design. As you are aware, the Trust has already engaged in preliminary discussion with NDEP Bureau of Water Pollution Control (NDEP-BWPC) regarding the Proposed Action and the associated NPDES permit, and based upon those discussions, the Trust has been using its current NPDES permit as criteria for the EE/CA and the preliminary design activities already in progress. It is the intent of the Trust to fully engage NDEP-BWPC through the submittal of a NPDES permit application after receipt of approval of the Proposed Action's budget, as discussed later in this letter. The Trust will require finalization of the permit technical criteria prior to October 15, 2016 to enable the readiness of the treatment system by June 1, 2017. Furthermore, the Trust will require issuance of the NPDES permit prior to May 1, 2017.

3. The Trust will require access rights from Basic Environmental Corporation (BEC) to expand the perimeter of Lift Station #1 to construct the treatment system. Additional rights will need to be obtained from BEC for pipeline conveyances into and out of Lift Station #1. The Trust has already begun dialogue with BEC on this matter and will require these rights be obtained from BEC no later than January 7, 2017 to enable the readiness of the treatment system by June 1, 2017.

4. The Trust will require access rights from both US BOR and BEC to collect critical data required for the design of the Proposed Action. The Trust will require these rights from US BOR and BEC no later than September 30, 2016, and October 31, 2016, respectively, to enable the readiness of the treatment system by June 1, 2017. Due to the relative immediate need for this access, the Trust may request NDEP assistance with US BOR on this matter.

While acknowledging that NDEP has not yet selected a final Response Action and modifications may be necessary due to public comment on the EE/CA, as we discussed, and in order to meet NDEP's timeline, it is the desire of NERT to obtain a single budget approval from NDEP for the complete implementation of the Proposed Action, including the funding assumed at this time to be necessary for the ongoing operation and maintenance of the treatment system as long as dewatering operations are conducted by SNWA. Accordingly, at this time the Trust requests a budget approval of $38,000,000 to construct the treatment system, adhere to SNWA's timeline and comply with the Order. When evaluating this amount, please note the following assumptions made by NERT:

- The costing identified in this EE/CA does not include all expected costs for siting, planning, permitting, management, design or operation to complete the project. Project specific components not included in the budgetary numbers include but are not limited to Trust and legal services; federal NEPA requirements including surveys and mitigation measures if required; clarification of lead permitting agency and jurisdiction on site lands; complete federal, state, and local permitting; schedule delays due to permitting and access approvals; treatment requirements beyond those identified in the EE/CA; conveyance piping route modifications due to environmental, engineering, or access constraints; or process modifications based on additional requirements identified during detailed design or to provide contingency needed to accommodate flow or water quality variations. Accordingly, the costs presented in the EE/CA are expected to be within plus 50% and minus 30% of actual costs, commensurate with the conceptual stage of design available at this level of evaluation. For the purposes of this $38,000,000 request, the Trust has included all contingency at the full 50% and a 30% contingency on all capital items.
- As SNWA is unable to provide the Trust an expected duration of dewatering activities other than "4 to 16 months", this request assumes the treatment system will need to be operated for 16 months.
- As SNWA is unable to provide the Trust an exact schedule of pumping rates, nor is NERT able to engage with SNWA's contractor regarding pumping rates, this request assumes the full flow of 6,900 GPM for the entirety of the 16 month period.
- As neither SNWA nor the Trust are able to determine the exact nature of influent water quality, this request makes certain assumptions (as noted in the EE/CA), inclusive of an average perchlorate concentration of 1.3 ppm.

Consistent with our conversations, this $38,000,000 budget request represents a "worst case scenario" number and includes many assumptions that may not materialize in the field. Due to the nature of the relationship between the Trust and NDEP and the budgetary approval required by the Trust Agreement, it was agreed that this approach would yield the Trust the greatest flexibility in its desire to comply with the NDEP Order. In an effort to comply with NDEP's request to provide a more conservative costing of the Proposed Action based upon the Trust's technical analysis, an estimated total cost of $17,000,000 could be assumed. This alternative costing is based upon an average of 2,000 GPM over a duration of 6 months. It is very important to note that this alternative costing is provided for informational purposes only and is in no way guaranteed by the Trust.

Please keep in mind that the Trust will make every effort to minimize project expenditures to the extent possible and that all costs associated with the project will be tracked and presented to NDEP as part of our established expense reporting procedures.

As previously approved by NDEP, and in an effort to comply with the Order and the required time constraints imposed by SNWA, the Trust has already authorized preliminary permitting and design exercises related to the implementation of the Proposed Action under the existing L09 task budget totaling $246,000. It should be noted, however, that the Trust recognizes that NDEP has yet to order the implementation of the Proposed Action and it is still subject to public comment.

To keep the project on schedule, the Trust will require an approval of $750,000 against this total request by no later than September 23, 2016 to conduct various pre-design investigations and to further the system design. The Trust will then require approval of the full budget no later than October 31, 2016, which we expect to fall after the expiration of the public comment period. Please understand that the Trust will continue to incur costs under the L09 task, as described above, until alternative direction is received from NDEP.

We look forward to discussing this project.

If you have any questions or concerns regarding this matter, feel to contact me at (312) 498-2800 or at andrew.steinberg@nert-trust.com.

Office of the Nevada Environmental Response Trust

By: _____

Andrew W. Steinberg, not individually but solely as Vice-President
of Le Petomane XXVII, Inc., not individually but solely as
the Nevada Environmental Response Trust Trustee



ED_002461_00004015-00003

ec: Jay Steinberg, as President of the Nevada Environmental Response Trust Trustee and not individually
Steve Clough, Nevada Environmental Response Trust
Dave Emme, NDEP Administrator
Greg Lovato, NDEP Deputy Administrator
Valerie King, Nevada State Environmental Commission, Carson City
Micheline Fairbank, Attorney General's Office, Carson City
Carlton Parker, NDEP BISC Las Vegas
Weiquan Dong, NDEP BISC Las Vegas
Alison Fong, U.S. Environmental Protection Agency, Region 9
Betty Kuo Brinton, MWDH20
Brenda Pohlmann, City of Henderson
Carol Nagai, MWDH20
Steven Anderson, Southern Nevada Water Authority
Chuck Elmendorf, Stauffer Management Company, LLC
Dave Share, Olin
David Johnson, Central Arizona Water Conservation District
Dave Johnson, LVVWD
Ebrahim Juma, Clean Water Team
George Crouse, Syngenta Crop Protection, Inc.
Jeff Gibson, Endeavour
Jill Teraoka, MWDH20
Joe Kelly, Montrose Chemical Corporation of CA
Joe Leedy, Clean Water Team
Katherine Baylor, U.S. Environmental Protection Agency, Region 9
Kevin Fisher, LV Valley Water District
Lee Farris, BRC
Letitia Moore, U.S. Environmental Protection Agency, Region 9
Marcia Scully, Metropolitan Water District of Southern California
Maria Lopez, Metropolitan Water District of Southern California
Mark Paris, Landwell
Mickey Chaudhuri, Metropolitan Water District of Southern California
Peggy Roefer, CRC
Richard Pfarrer, TIMET
Scott Bryan, Central Arizona Project
Steve Armann, U.S. Environmental Protection Agency, Region 9
Tanya O'Neill, Foley & Lardner
Brandon Barrow, U.S. Bureau of Reclamation

# Engineering Evaluation / Cost Analysis
# Weir Dewatering Treatment
# Nevada Environmental Response Trust Site
# Henderson, Nevada

PREPARED FOR

**Nevada Environmental Response Trust**
35 E. Wacker Drive, Suite 1550
Chicago, IL 60601

PRESENTED BY

**Tetra Tech, Inc.**
1489 West Warm Springs Road, Suite 110
Henderson, NV 89014

**August 30, 2016**

# TABLE OF CONTENTS

**EXECUTIVE SUMMARY ..... viii**

**1.0 INTRODUCTION ..... 1**

1.1 Purpose and Objectives ..... 1

1.2 Report Organization ..... 2

**2.0 SITE CHARACTERIZATION ..... 3**

2.1 Site Description ..... 3

2.1.1 Physical Setting ..... 3

2.1.1.1 Weir Location ..... 3

2.1.1.2 Land Use and Ownership ..... 3

2.1.1.3 Topography ..... 4

2.1.1.4 Climate ..... 4

2.1.1.5 Sensitive Species ..... 4

2.1.1.6 Surface Water ..... 5

2.1.1.7 Geology and Hydrogeology ..... 5

2.1.2 Regulatory History ..... 5

2.1.3 Groundwater Quality Characterization ..... 6

2.1.4 SNWA Dewatering Plan ..... 6

2.2 Risk Analysis ..... 7

**3.0 REMOVAL ACTION OBJECTIVES ..... 8**

3.1 Scope and Purpose ..... 8

3.2 Justification for Proposed Action ..... 8

3.3 Response Goals ..... 8

3.3.1 Applicable or Relevant and Appropriate Requirements (ARARs) ..... 8

3.3.2 Groundwater and Surface Water ..... 10

3.3.3 Treatment System Byproduct ..... 10

**4.0 DEVELOPMENT & INITIAL SCREENING OF REMOVAL ACTION ALTERNATIVES ..... 11**

4.1 Identification of Alternatives ..... 11

4.1.1 Treatment System Location & Water Conveyance ..... 11

4.1.2 Treatment Technology Alternatives ..... 12

4.2 Initial Alternative Screening and Selection ..... 12

4.2.1 Treatment Plant Screening ..... 12

4.2.2 Treatment Alternative Technology Screening ..... 12



ED_002461_00004015-00006

4.2.2.1 Biological Treatment ..... 12
4.2.2.2 Ion Exchange Treatment ..... 13
4.2.2.3 Activated Carbon Treatment ..... 14
4.2.2.4 Emerging Treatment Technologies ..... 15
4.2.2.5 Treatment Technology Evaluation ..... 15
**5.0 ANALYSIS OF ALTERNATIVES ..... 17**
5.1 Evaluation Criteria ..... 17
5.1.1 Effectiveness ..... 17
5.1.2 Implementability ..... 17
5.1.3 Construction Schedule ..... 18
5.1.4 Permitting Requirements ..... 18
5.1.5 Capital and Operating Cost Estimates ..... 18
5.2 EVALUATION OF ALTERNATIVES ..... 19
5.2.1 Alternative 1 – Biological Treatment Plant ..... 19
5.2.1.1 Effectiveness ..... 19
5.2.1.2 Implementability ..... 20
5.2.1.3 Construction Schedule ..... 20
5.2.1.4 Permitting Requirements ..... 21
5.2.1.5 Capital and Operating Cost Estimates ..... 21
5.2.2 Alternative 2 – SBA Ion Exchange Treatment Plant ..... 22
5.2.2.1 Effectiveness ..... 22
5.2.2.2 Implementability ..... 22
5.2.2.3 Construction Schedule ..... 23
5.2.2.4 Permitting Requirements ..... 23
5.2.2.5 Capital and Operating Cost Estimates ..... 23
**6.0 COMPARATIVE ANALYSIS OF ALTERNATIVES ..... 25**
**7.0 RECOMMENDED ACTION ALTERNATIVE ..... 26**
7.1 Description of the Treatment Process ..... 26
7.1.1 Water Storage and Pump Station ..... 26
7.2 Multi-Media Filtration System ..... 27
7.2.1 Ion Exchange Treatment System ..... 28
7.3 Treated Effluent Discharge System ..... 29
7.4 Multi-Media Filter Backwash Management ..... 29
7.4.1 On-Site Solids Management ..... 30



ED_002461_00004015-00007

7.4.2 Off-Site Solids Management ..... 30
7.5 Preliminary Capital and Operating Cost Estimates ..... 31
7.5.1 Preliminary Capital Cost Estimate ..... 31
7.5.2 Preliminary Operating Cost Estimate ..... 32
**8.0 REFERENCES ..... 33**



ED_002461_00004015-00008

## LIST OF TABLES

***Table 1*** Water Quality Characteristics

***Table 2*** Historic Dewatering at Weirs along Las Vegas Wash

***Table 3*** Alternatives for Detailed Evaluation

***Table 4*** Comparison of Alternatives

## LIST OF FIGURES

***Figure 1*** Overview Site Map

***Figure 2*** Site Location Map

***Figure 3*** Monitoring Well and Plume Location Map

***Figure 4*** Land Ownership and Permitting Jurisdiction

***Figure 5*** Conceptual Treatment Facility Location and Conveyance

***Figure 6*** Process Flow Diagram – Ion Exchange Treatment Unit without Solids Treatment

***Figure 7*** Process Flow Diagram – Ion Exchange Treatment Unit with Onsite Solids Treatment

***Figure 8*** Process Flow Diagram – Tanks and Pump Station General Arrangement

***Figure 9*** Process Flow Diagram – Central Water Treatment Plant General Arrangement

## APPENDICES

***Appendix A*** Weir Dewatering Water Quality Data

***Appendix B*** Cost Estimate Worksheets

***Appendix C*** Resin Data Sheets and SDSs



ED_002461_00004015-00009

# LIST OF ACRONYMS/ABBREVIATIONS

| Acronyms/Abbreviations | Definition |
|---|---|
| amsl | Above Mean Sea Level |
| ARARs | Applicable or Relevant and Appropriate Requirements |
| ASTM | American Society for Testing and Materials |
| bgs | Below ground surface |
| BISC | Bureau of Industrial Site Cleanup |
| BMI | Black Mountain Industrial |
| BOR | United States Bureau of Reclamation |
| BWPC | Bureau of Water Pollution Control |
| CERCLA | Comprehensive Environmental Response, Compensation, and Liability Act |
| EE/CA | Engineering Evaluation / Cost Analysis |
| GAC | Granulated Activated Carbon |
| gpm | Gallon per Minute |
| HDPE | High-Density Polyethylene |
| HRA | Health Risk Assessment |
| MAC | Modified Activated Carbon |
| MCL | Maximum Contaminant Level |
| ug/L | Micrograms per Liter |
| mph | Miles per Hour |
| MSDS | Material Safety Data Sheet |
| NDEP | Nevada Division of Environmental Protection |
| NEPA | National Environmental Policy Act |
| NERT | Nevada Environmental Response Trust |
| NPDES | National Pollutant Discharge Elimination System |
| NRC | National Research Council |
| ppb | Parts per Billion |
| ppm | Parts per Million |
| psig | Pounds per Square-Inch Gage |
| RAA | Recommended Action Alternative |
| RAO | Removal Action Objective |
| SBA | Strong Base Anion |
| SNWA | Southern Nevada Water Authority |
| TDS | Total Dissolved Solids |
| TSS | Total Suspended Solids |



ED_002461_00004015-00010

| Acronyms/Abbreviations | Definition |
|---|---|
| tGAC | Tailored Granulated Activated Carbon |
| USEPA | United States Environmental Protection Agency |
| USFWS | United States Fish and Wildlife Service |
| VFD | Variable Frequency Drive |
| WBA | Weak Base Anion |



ED_002461_00004015-00011

# CERTIFICATION

I hereby certify that I am responsible for the services described in this document and for the preparation of this document. The services described in this document have been prepared in a manner consistent with the current standards of the profession, and to the best of my knowledge, comply with all applicable federal, state, and local statutes, regulations, and ordinances.

***Description of Services Provided:***

Engineering Evaluation / Cost Analysis that assesses the cost, feasibility, schedule and permitting requirements for the transfer and treatment of perchlorate contaminated groundwater extracted during Southern Nevada Water Authority weir construction dewatering for the Sunrise Mountain and Historic Lateral weirs.

August 30, 2016

**Kyle Hansen, CEM**
Field Operations Manager/Geologist
Tetra Tech, Inc.

Date

Nevada CEM Certificate Number: 2167
Nevada CEM Expiration Date: September 18, 2016



ED_002461_00004015-00012

# EXECUTIVE SUMMARY

This Engineering Evaluation/Cost Analysis for Weir Dewatering Water Treatment (EE/CA) has been prepared on behalf of the Nevada Environmental Response Trust (NERT or Trust) in response to the Finding and Order Requiring Engineering Evaluation/Cost Analysis (Order) issued by the Nevada Division of Environmental Protection (NDEP), Bureau of Industrial Site Cleanup (BISC) to the Trust on April 12, 2016. The NERT site comprises approximately 346 acres of the larger Black Mountain Industrial (BMI) Complex, in an unincorporated portion of Clark County that is surrounded by the City of Henderson, Nevada. The NERT site has been used for industrial operations since 1942, when it was developed by the United States government as a magnesium plant in support of World War II operations. Following the war, various industrial activities, including the production of perchlorates, boron, and manganese compounds, continued at the BMI Complex. Former industrial and waste management practices by former owners and operators at the NERT site and adjacent properties have resulted in impacts to soil, groundwater, and surface water.

As discussed in the Order, the Southern Nevada Water Authority (SNWA) is in the process of constructing weirs along the Las Vegas Wash to mitigate erosion. Some of the weir construction is located approximately 3 miles downgradient of the NERT site; however, the perchlorate plume in groundwater extends downgradient from the NERT site to the Las Vegas Wash. The weir construction is within the footprint of the downgradient perchlorate plume. Weir construction requires surface water diversion of the Las Vegas Wash and groundwater dewatering in the area around the weir location, with discharge of groundwater to the Las Vegas Wash downstream of the construction site. Two weirs, the Sunrise Mountain Weir and the Historic Lateral Weir (see Figure 1), are proposed for construction in the vicinity of where the perchlorate groundwater plume from the NERT site intersects the Las Vegas Wash. Construction of these weirs is anticipated to begin in June 2017 and conclude in 2019. The Order requires development of an EE/CA to evaluate the cost, feasibility, schedule and permitting requirements for the transfer and treatment of perchlorate in groundwater extracted during SNWA weir construction dewatering.

The purpose of this EE/CA is to identify a recommended alternative for treatment of groundwater extracted during weir construction dewatering activities to help prevent the discharge of this groundwater from contributing to continued exceedance of the current Nevada provisional maximum contaminant level for perchlorate of 18 micrograms per liter (ug/L) (equal to 0.018 parts per million (ppm)). The long-term objectives of this project will be to develop a detailed design for groundwater conveyance and treatment, construct necessary systems to treat extracted groundwater prior to SNWA initiation of construction activities at the Sunrise Mountain and Historic Lateral weirs, and to treat groundwater extracted during weir construction dewatering activities prior to discharge back to the Las Vegas Wash. Discharge of extracted groundwater will require a National Pollution Discharge Elimination System (NPDES) permit, which in turn requires that extracted groundwater be treated to surface water discharge standards prior to discharge.

NDEP has established 0.018 ppm perchlorate as a provisional action level for drinking water, based upon United States Environmental Protection Agency (USEPA) 1999 interim guidance. The Bureau of Water Pollution Control has used 0.018 ppm as a discharge standard through the NPDES permit system; accordingly, 0.018 ppm will likely be the permit requirement for perchlorate for this project.

NDEP has directed the Trust to assume only two dewatering treatment scenarios:

- Scenario A: Centralized treatment capable of treating simultaneous inflows from both weir projects not to exceed a combined 5,000 gallons per minute (gpm); and
- Scenario B: Centralized treatment capable of treating simultaneous inflows from both weir projects not to exceed a combined 6,900 gpm.



ED_002461_00004015-00013

Two decentralized treatment systems were initially considered, but due to the associated high costs with constructing two duplicative treatment systems, NDEP directed NERT to only consider a single, centralized treatment plant option. Additional local, state, and federal regulatory requirements include:

- Compliance with threatened and endangered species protections;
- Protection for cultural resources; and
- Approval and compliance with applicable local, state, and federal permits.

Options for water treatment system locations, water conveyance and water treatment methods are identified and then screened to eliminate options and technologies that are obviously unfeasible, ineffective, or cost prohibitive, while retaining potentially viable options. Treatment system locations and water conveyance options evaluated include: 1) a single, combined treatment facility with water conveyance from each weir to the combined treatment facility (located on the north or the south side of the Las Vegas Wash); and 2) two treatment facilities with one located proximal to each weir, located on either the north or south side of the Las Vegas Wash. Treatment technologies were limited to those that have commercially demonstrated effective remediation of perchlorate contaminated groundwater, which include biological and physical/chemical treatment systems.

The screening of the treatment system locations eliminates the two treatment facility option and the combined treatment plant and associated water conveyance necessary for a treatment plant located on the south side of the Las Vegas Wash is carried forward for detailed analysis. The treatment technology screening identifies that biological treatment and strong base anion (SBA) exchange resin treatment are successfully commercialized technologies that have effectively remediated perchlorate-contaminated water at the anticipated concentrations that will be generated during the weir dewatering operations. These two treatment options are carried forward for detailed analysis.

Since only one treatment plant location and conveyance siting option is carried forward from the initial screening for the detailed analysis, the two treatment alternatives carried into the detailed analysis are based on the single plant location and conveyance siting. The evaluation criteria used for the detailed analysis of alternatives included effectiveness, implementability, construction schedule, permitting requirements, and capital and operating cost estimates.

Alternative 1 includes a biological treatment plant located on the south side of the Las Vegas Wash near Lift Station #1. This includes: two pump stations, one at the eastern side of the SNWA construction staging area at the Sunrise Mountain Weir and the second at the southern side of the SNWA construction staging area at the Historic Lateral Weir, two surface-laid influent conveyance pipelines from each pump station to the treatment plant, and a surface-laid effluent pipeline from the treatment plant to discharge to the Las Vegas Wash just east of the Sunrise Mountain Weir. This biological treatment option includes an equalization tank, biological reactors, storage tanks, nutrient tanks, sludge management system and pumps.

Alternative 2 includes an SBA ion exchange treatment plant located on the south side of the Las Vegas Wash near Lift Station #1. This includes: two pump stations, one at the eastern side of the SNWA construction staging area at the Sunrise Mountain Weir and the second at the southern side of the SNWA construction staging area at the Historic Lateral Weir, two surface-laid influent conveyance pipelines from each pump station to the treatment plant, and a surface-laid effluent pipeline from the treatment plant to discharge to the Las Vegas Wash just east of the Sunrise Mountain Weir. The SBA treatment plant includes multi-media filter tanks, ion exchange resin vessels, storage tanks, and transfer pumps.

The detailed comparison of the two alternatives identified that Alternative 1 – Biological Treatment fails to meet the effectiveness and the implementability criteria. The bacteria in the reactors cannot survive extended periods of no-flow conditions and this would render the reactors ineffective for treatment of perchlorate contaminated water. The anticipated fluctuations in the weir dewatering flowrates range from 0 to 6,900 gpm; historic dewatering operations associated with previous weirs constructed along the Las Vegas Wash indicated it is common for there to be some zero-flow days during weir construction. The historic dewatering data indicated the minimum non-zero



ED_002461_00004015-00014

dewatering flow rate may range from 3 to 25 gpm. The zero or low-flow rates could be mitigated by storing approximately 1 day of flow, such that this water could be used to maintain the biological treatment system during one or two days of zero or minimum flow. A 10 million gallon equalization tank could be used to balance the flow rates, but may not provide sufficient capacity depending on the number of days of no-flow or low-flow conditions. Additionally, a tank of this capacity will take more than one year to construct, which is not feasible for the weir dewatering implementation schedule. The approximate capital and operating costs for 12 months of operation of this alternative are approximately 50% higher than the respective costs for Alternative 2. For these reasons, Alternative 1 – Biological Treatment is considered non-viable when compared to Alternative 2.

Alternative 2 – SBA Ion Exchange Treatment meets all the evaluation criteria. This is a commercially demonstrated technology remediating perchlorate-impacted groundwater at concentrations ranging from 0.05 ppm to 500 ppm. The maximum anticipated perchlorate concentrations from the weir dewatering operation is 1.8 ppm, based on the maximum average perchlorate concentrations detected in groundwater wells close to the proposed weirs. The equipment necessary to implement this alternative is available. The on-site management of solids generated from backwashing the multi-media filters is the recommended solids management option, as it is more cost-effective than off-site management of the solids. The approximate capital and operating costs for 12 months of operation of this alternative are significantly lower than the respective costs for Alternative 1.

The Recommended Action Alternative for conveyance and treatment of perchlorate-impacted groundwater extracted during weir construction dewatering operations includes an SBA ion exchange treatment plant and associated water conveyance located on the south side of the Las Vegas Wash near Lift Station #1. The dewatering treatment system will be capable of treating perchlorate concentrations higher than the maximum anticipated concentration of 1.8 ppm; the impact of higher perchlorate concentrations in influent water to the treatment system would be a higher resin replacement rate, which would result in higher operating costs. The SBA ion exchange treatment process will consist of the following:

1) a pump station at each weir construction hand-off point, where contaminated groundwater will be received in storage tanks and transfer pumps will convey the water via above ground piping to the treatment plant;
2) pretreatment using multi-media filtration to remove suspended solids from the water before treatment for perchlorate;
3) SBA ion exchange treatment of water to remove perchlorate;
4) suspended solids management; and
5) temporary storage of treated water followed by discharge to the Las Vegas Wash via above ground piping.

The recommended treatment configuration to manage the suspended solids removed by the multi-media filters includes backwashing the suspended solids from the multi-media filters, containing the backwashed solids in storage tanks, and re-blending the solids with the treated effluent prior to the effluent being conveyed to the Las Vegas Wash (on-site solids management).

As construction of the SNWA weirs is anticipated to begin in June 2017, the Trust has been directed to develop a schedule that includes completing dewatering treatment system construction by May 2017 and system commissioning in May 2017. The treatment system will be ready to receive and treat water by June 1, 2017.

# 1.0 INTRODUCTION

This Engineering Evaluation/Cost Analysis for Dewatering Water Treatment (EE/CA) has been prepared on behalf of the Nevada Environmental Response Trust (NERT or Trust) in response to the Finding and Order Requiring Engineering Evaluation/Cost Analysis (Order) issued by the Nevada Division of Environmental Protection (NDEP), Bureau of Industrial Site Cleanup (BISC) to the Trust on April 12, 2016. The NERT site is an approximately 346 acre area within the larger Black Mountain Industrial (BMI) complex (see Figure 1), in an unincorporated portion of Clark County that is surrounded by the City of Henderson, Nevada. The NERT site has been used for industrial operations since 1942, when it was developed by the United States government as a magnesium plant in support of World War II operations. Following the war, various industrial activities, including the production of perchlorates, boron, and manganese compounds, continued at the BMI Complex. Former industrial and waste management practices by prior owners and operators at the NERT site and adjacent properties have resulted in impacts to soil, groundwater, and surface water.

As discussed in the Order, the Southern Nevada Water Authority (SNWA) is in the process of constructing weirs along the Las Vegas Wash to mitigate erosion. Some of the weir construction is located approximately 3 miles downgradient of the NERT site; however, the perchlorate plume in groundwater extends downgradient from the NERT site to the Las Vegas Wash. The weir construction is within the footprint of the downgradient perchlorate plume. Weir construction requires surface water diversion of the Las Vegas Wash and groundwater dewatering in the area around the weir location, with discharge of groundwater to the Las Vegas Wash downstream of the construction site. Two weirs, the Sunrise Mountain Weir and the Historic Lateral Weir, are proposed for construction in the vicinity of where the perchlorate groundwater plume originating from the NERT site intersects the Las Vegas Wash (Figure 1). Construction of these weirs is anticipated to begin in June 2017; dewatering activities and treatment of the groundwater are scheduled to commence no earlier than June 1, 2017. The SNWA has advised the Trust that the dewatering activities will take anywhere from 4 to 16 months; therefore, this document provides a conservative and flexible costing approach for project implementation. The SNWA has further advised the Trust that construction of both weirs is scheduled to conclude in 2019. The Order requires development of an EE/CA to evaluate the cost, feasibility, schedule and permitting requirements for the transfer and treatment of perchlorate in groundwater extracted during SNWA weir construction dewatering.

## 1.1 PURPOSE AND OBJECTIVES

The purpose of this EE/CA is to evaluate alternatives and select a preferred alternative for conducting conveyance and treatment of extracted groundwater impacted with perchlorate resulting from dewatering activities associated with SNWA's construction of the Sunrise Mountain and Historic Lateral weirs.

The conveyance and treatment alternatives described in this report address the goal stated in the Order to help prevent contribution to the continued exceedance of the current Nevada provisional maximum contaminant level (MCL) for perchlorate of 18 micrograms per liter (ug/L) (equal to 0.018 parts per million (ppm)). The principal objective is to identify a recommended treatment alternative for perchlorate-impacted groundwater extracted during weir construction that meets the directed hydraulic and expected mass loading requirements of SNWA weir construction contractor dewatering activities. Two decentralized treatment systems were initially considered (one associated with each proposed weir location), but due to the associated high costs with constructing two duplicative treatment systems, NDEP directed NERT to only consider a single, centralized treatment plant option. NDEP has directed the Trust to assume only two dewatering treatment scenarios:

- Scenario A: Centralized treatment capable of treating simultaneous inflows from both weir projects not to exceed a combined 5,000 gallons per minute (gpm); and
- Scenario B: Centralized treatment capable of treating simultaneous inflows from both weir projects not to exceed a combined 6,900 gpm.

SNWA (and their dewatering contractor) will determine the actual dewatering flow rates; the Trust has estimated the potential loading at the treatment facility based upon the NDEP directed flow rates indicated in the two scenarios above.

Identification and evaluation of conveyance and treatment alternatives presented in this report required a detailed review of previous weir construction and dewatering activities and groundwater quality in the vicinity of the proposed weirs. For the purpose of this EE/CA, the area of the SNWA weir construction footprint associated with the Sunrise Mountain and Historic Lateral Weirs including the associated easements, as shown on Figure 2, will be referred to as "the Site".

## 1.2 REPORT ORGANIZATION

This EE/CA is organized into 8 sections. The contents of Sections 2 through 8 are summarized below.

- Section 2: Site Characterization – Discusses the Site's physical setting, regulatory history, groundwater characterization and SNWA's dewatering plan, as well as the risk analysis associated with conveyance and treatment of extracted groundwater impacted by perchlorate.
- Section 3: Removal Action Objectives – Presents the purpose and objectives of completing this EE/CA, justification for the proposed action methods, and presents the Applicable or Relevant and Appropriate Requirements (ARARs) for treatment.
- Section 4: Development and Initial Screening of Alternatives – Identifies and discusses potentially effective conveyance alternatives and treatment technologies for implementation at the Site.
- Section 5: Analysis of Alternatives – Summarizes the alternative evaluation criteria followed by development and discussion of specific alternatives selected for further analysis.
- Section 6: Comparative Analysis of Alternatives – Discusses each alternative in relation to other alternatives and their effectiveness for reducing risk related to key environmental consequences.
- Section 7: Recommended Action Alternative – Presents a systematic, step-wise approach to implementation of a Recommended Action Alternative (RAA)
- Section 8: References

Appendices are presented at the end of the document. Appendix A presents weir dewatering water quality data, Appendix B presents the alternative cost estimates, and Appendix C presents resin data sheets and material safety data sheets (MSDSs).



ED_002461_00004015-00017

# 2.0 SITE CHARACTERIZATION

## 2.1 SITE DESCRIPTION

The proposed Sunrise Mountain and Historic Lateral weirs are located in the Las Vegas Wash north (downgradient) of the NERT site. The NERT site has been used for industrial purposes since 1942, when it was initially developed by the United States government as a magnesium plant to support World War II operations. Since that time, the NERT site and the surrounding properties have been used for chemical manufacturing, including the production of various chlorate and perchlorate compounds. Entities that operated at the NERT site and surrounding properties include Western Electrochemical Company, American Potash and Chemical Company, Kerr-McGee Chemical Corporation (Kerr-McGee), and Tronox LLC (Tronox). Tronox most recently owned and operated the NERT site until February 14, 2011, when NERT took title to the NERT site in conjunction with the settlement of Tronox's Chapter 11 bankruptcy. Historical industrial production and related waste management activities conducted by former owners and operators at the NERT site and on adjacent properties have resulted in the contamination of various environmental media, including soil, groundwater, and surface water. The most notable chemicals of concern are perchlorate and chromium.

### 2.1.1 Physical Setting

#### 2.1.1.1 Weir Location

The proposed Sunrise Mountain and Historic Lateral weir construction locations are located approximately 2,000 feet (ft) west and 3,000 ft east of Pabco Road, respectively, as shown on Figure 2. The SNWA construction areas and easements associated with weir construction encompass approximately 75 and 40 acres, respectively for the Sunrise Mountain and Historic Lateral Weirs, including the weirs, temporary surface water diversion channels, and bank areas. The NERT site is located approximately 3 miles to the southwest of the proposed Sunrise Mountain and Historic Lateral weirs. Dewatering during weir construction will be conducted by SNWA contractors. SNWA has advised the Trust that while every effort will be made to provide updates on project progress and direction, the Trust will not be able to modify or direct the SNWA contractors throughout the project's implementation. SNWA will transfer the water to the Trust at a separate handoff location for each weir. The Sunrise Mountain water handoff is located approximately 500 feet southeast of its respective surface water diversion channel and the Historic Lateral weir handoff is located approximately 1,100 feet south of its respective surface water diversion channel. The handoff locations do not represent the most cost-effective locations for the Trust to receive water from the weir dewatering operations. However, these handoff locations were selected and approved by SNWA. The water handoff locations are shown on Figure 2.

#### 2.1.1.2 Land Use and Ownership

Land ownership in and around the proposed weir locations is shown in Figure 4. Lands at and near the proposed weir construction areas are owned by the following entities:

- US Bureau of Reclamation (BOR) (Las Vegas Wash);
- Clark County (Parks and Community Service) (north of Las Vegas Wash);
- City of Henderson (south of Las Vegas Wash); and
- Basic Environmental Co LLC (south of Las Vegas Wash).

Land use in the area currently consists of park areas (County of Clark), and other undeveloped lands.

### 2.1.1.3 Topography

The elevations of the proposed Sunrise Mountain and Historic Lateral weirs are approximately 1,540 ft above mean sea level (amsl) and 1,520 ft amsl, respectively. The Las Vegas Wash flows from west to east, with areas of well-defined banks shaped by erosion. Upland areas on the south bank of the wash generally slope gently downwards to the north (towards the wash) at an approximate gradient of 0.01 ft/ft (ENSR 2005). Upland areas on the north bank of the wash area slope up to the north (away from the wash) at an approximate gradient of 0.02 ft/ft.

### 2.1.1.4 Climate

The climate in the vicinity of the Site is arid with summers that are dry and hot (20% relative humidity, and up to 120 °F), and mild winters. Precipitation averages 4.5 inches annually (based on data collected from 1971 – 2000), with the majority of precipitation falling between December and March (low intensity rainfall over broad areas) and between July and September (high intensity precipitation over localized areas, occasionally associated with flooding events). Winds typically blow at an average of 9 miles per hour (mph), but during storm events or when weather fronts move through the area, can blow in excess of 50 mph resulting in significant blowing dust, sand and soil (ENVIRON, 2014).

### 2.1.1.5 Sensitive Species

The following sensitive species were identified by the US Fish and Wildlife Service (USFWS) in 2009 as having the potential to occur in the area of the proposed weir construction (USFWS, 2009):

Endangered Species

- Southwestern willow flycatcher (*Empidonax trailli extimus*);
- Yuma clapper rail (*Rallus longirostris yumanesis*); and
- Razorback sucker (*Xyrauchen texanus*).

Threatened Species

- Desert tortoise (*Gopherus agassizii*, Mohave population)

In 2009 the USFWS' Biological Opinion for Weir Construction Associated Activities within the Clark County Wetlands Park (USFWS, 2009) identified that the proposed weir construction "may adversely affect" the desert tortoise, but that no designated critical desert tortoise habitat was anticipated to be adversely affected by the proposed action. The opinion also stated that none of the species listed as endangered identified in the area were likely to be adversely affected.

As a result of the determination that activities may adversely affect the desert tortoise, a number of mitigation measures and procedures were outlined in the 2009 Biological Opinion which were required to be followed when conducting weir construction (and associated dewatering treatment) activities.

Based on review of the database maintained by the USFWS, the following *additional* sensitive species were identified as having the potential to occur in the area of the proposed weir construction:

Endangered Species

- Pahrump Poolfish (*Empetrichthys latos*)

Threatened Species

- Yellow-billed Cuckoo (*Coccyzus americanus*)

Twenty-three species of migratory birds of conservation concern also have been identified, which potentially could be affected by activities in the vicinity of the weirs.

Based on recent discussions between BOR and NDEP, The Trust understands it will be required to obtain all necessary permits for the selected treatment system and pipeline conveyance. It is anticipated that the mitigation measures and procedures outlined in the 2009 Biological Opinion for the desert tortoise will likely continue to be required for proposed Site work.

#### 2.1.1.6 Surface Water

The Las Vegas Wash flows from west to east in the vicinity of the proposed weir construction sites. The Las Vegas Wash continues downstream to Lake Mead and serves as the channel conveying excess surface water flow from the Las Vegas Valley to Lake Mead.

#### 2.1.1.7 Geology and Hydrogeology

The proposed weir construction sites are located within the Las Vegas Wash, near the southeast end of the Las Vegas Valley. The near surface geology of the sites consists of valley-fill deposits within the Las Vegas Valley area, a structural basin that also includes the metropolitan areas of North Las Vegas, Las Vegas, and Henderson. The Las Vegas Valley is a structural basin formed by bedrock that ranges in age from Precambrian through Miocene. Gravity data indicate that the deeper parts of the basin are filled with 3,000-5,000 feet of clastic sedimentary deposits that range in age from Miocene through Holocene. These deposits constitute the valley-fill aquifer and yield most of the water pumped in the valley. The upper 1,000 feet of this valley fill consist of coarse-grained deposits (sand and gravel), fine-grained deposits (silt and clay), and heterogeneous deposits that comprise either thinly-interbedded coarse- and fine-grained deposits or mixtures of the two (Plume, 1989).

The groundwater flow direction at the NERT site is to the north-northeast towards the Las Vegas Wash which flows into the Colorado River Basin. Depth to water data collected during a 2015 monitoring event indicate a groundwater depth range from less than 5 feet below ground surface (bgs) to greater than 80 feet bgs across the NERT site and to the Las Vegas Wash (Ramboll Environ, 2015a). Water quality in the shallow aquifer in the area of the NERT site is reported to have relatively high total dissolved solids (TDS) concentrations ranging from 2,500 to greater than 5,000 ppm (Ramboll Environ, 2015). The depth to groundwater near the wash ranges from 2 to 10 ft bgs, based on review of April 2016 potentiometric surface contours (AECOM, 2016). The vertical gradient near the Las Vegas Wash is generally upward, with groundwater discharging into the wash and underlying alluvium (ENVIRON, 2014).

### 2.1.2 Regulatory History

This EE/CA has been prepared in response to the NDEP – BISC Order issued to the Trust on April 12, 2016. As discussed in the Order, treatment prior to the SNWA discharge to Las Vegas Wash of groundwater extracted during dewatering operations will be required to help prevent contribution to the continued exceedance of the current Nevada provisional MCL for perchlorate of 18 ug/L (0.018 ppm). Thus, the order requires the Trust to evaluate treatment options to remediate elevated concentrations of perchlorate in extracted groundwater (chromium is below reporting limits in groundwater wells close to the location of the proposed Sunrise Mountain and Historic Lateral weirs).

The regulatory history of the NERT site dates back to September 1986, when Kerr-McGee and NDEP entered into a consent order requiring groundwater characterization and the implementation of response actions to address chromium in groundwater. The elevated levels of perchlorate were originally identified in 1997, which prompted an ongoing investigation and response actions. In 1999 SNWA discovered an approximately 400 gpm seep discharging into the Las Vegas Wash that contained over 100 ppm perchlorate. This discovery resulted in a Consent Agreement between Kerr-McGee and NDEP, dated July 26, 1999 to initiate removal measures to intercept and treat the seep discharge. In 2005, Kerr-McGee's name was changed to Tronox LLC, and in 2009, Tronox filed for bankruptcy. NERT was established as part of the Tronox bankruptcy and reorganization, and in February 2011, NERT took title to the property previously owned by Tronox and received funds to perform

remediation of impacts related to historical operations at the NERT property, including perchlorate and hexavalent chromium.

SNWA developed the Las Vegas Wash Stabilization Program to: protect wetlands, reduce erosion, intercept contaminated groundwater, minimize sediment transport to Lake Mead, create recreation opportunities, and restore habitat. To date, SNWA has constructed 10 permanent grade stabilization weirs within the Clark County Wetlands Park. SNWA will construct two additional weirs within the Clark County Wetlands Park as part of this stabilization program: the Sunrise Mountain Weir and the Historic Lateral Weir. As identified previously, the two proposed weirs are located within the downgradient perchlorate-impacted groundwater plume from the NERT site. Accordingly, this EE/CA identifies and evaluates alternatives for treating contaminated water that will be extracted during the SNWA dewatering operations associated with the Sunrise Mountain Weir and the Historic Lateral Weir construction activities.

### 2.1.3 Groundwater Quality Characterization

The groundwater quality characterization used in this analysis was developed based on assessment of historic water quality data provided by Ramboll Environ and SNWA from samples taken from nearby monitoring wells in 2015 and 2016, and from water quality data taken during historic weir construction. After this detailed analysis was conducted, it was determined that additional sampling of nearby groundwater monitoring wells was not necessary to provide sufficient information for conducting the EE/CA analysis. It is recommended that groundwater sampling be conducted as outlined in the EE/CA workplan and response to agency comments at the initiation of the final design phase to confirm water quality prior to treatment plant construction.

The groundwater quality characterization included a review of data from wells close to the proposed Sunrise Mountain and Historic Lateral weirs shown on Figure 3, which include wells WMW6.55S and WMW5.58S, respectively. Analytical results for January 2015 and February 2016 groundwater samples collected from these wells are summarized below. The contaminant mass load anticipated in the water extracted during the SNWA dewatering operations associated with the Sunrise Mountain and Historic lateral weirs construction activities is based on the average concentrations of the key parameters, identified in Table 1.

The chemistry of the water close to Sunrise Mountain weir is different compared to the water chemistry close to the Historic Lateral weir. The key parameters that will impact the size and performance of the dewatering treatment system include perchlorate, nitrate, sulfate, and TDS; accordingly, the anticipated ranges of these parameters used for design purposes are provided below. The low end of the ranges are based on the average of the average concentrations at each location and the high end of the ranges are based on maximum average concentration:

- Perchlorate: 1.3 to 1.8 ppm;
- Nitrate: 30 to 36 ppm;
- Sulfate: 1,175 to 1,700 ppm; and
- TDS: 3,050 to 4,150 ppm.

A summary of weir dewatering water quality data is presented in Table 1 and Appendix A.

### 2.1.4 SNWA Dewatering Plan

SNWA provided information to the Trust regarding prior weir construction dewatering. Typically, SNWA conducts weir construction simultaneously for two weirs. Dewatering is conducted by SNWA contractors, the dewatering means and methods are determined by the contractor, and not dictated by SNWA. For the purposes of this analysis NDEP has directed the Trust to assume that the dewatering will not exceed a maximum flowrate of 6,900 gpm, combined, from dewatering operations at the two weirs under simultaneous construction. As a result of SNWA's limited control of dewatering operations, the actual dewatering flows (limited only by the assumed



ED_002461_00004015-00021

maximum permissible combined flowrate specified by NDEP), dewatering means and methods, and dewatering durations will be dictated by weir construction contractor operations. The Trust will not be able to modify or direct the SNWA contractors throughout the project's implementation. Dewatering information including flowrate and durations observed during construction of ten weirs, between 2004 and 2014, were provided by SNWA. All the weirs, except the Calico Ridge weir and Powerline weir, measured and reported flow on a daily basis. Flow was measured monthly at Calico Ridge weir and flow was measured weekly at the Powerline weir. Table 2 summarizes the dewatering data for each weir, including the non-zero minimum, average, and maximum dewatering rates.

The dewatering flow range at all the weirs (except 3 Kids weir) ranged from 4 gpm to 2,453 gpm. The 3 Kids weir is an exception, with a flow rate ranging from 1,174 gpm to 7,077 gpm; this higher dewatering flow rate is attributed to a non-conventional weir construction technique and infiltration of a significant amount of surface water. The average dewatering flow for all ten weirs is 849 gpm. Focusing the analysis to only include the two weirs located nearest to the proposed Sunrise Mountain weir and two weirs located nearest to the Historic Lateral weir shifts this average dewatering rate only slightly to 926 gpm. SNWA, in a June 2016 meeting with the Trust, echoed the prediction that their "Best Guess" range of dewatering per weir for the Sunrise Mountain and Historic Lateral weirs would be 500 – 1250 gpm (each). At the direction of NDEP, however, the weir dewatering treatment system design incorporates simultaneous inflows from both weir projects not to exceed a combined 5,000 gpm or a combined 6,900 gpm.

Data in Table 2 also indicate there were many days during the weir construction activities that did not generate any dewatering flow.

SNWA will include diversion valves in their pipelines in close proximity to the handoff locations; these valves will be used by SNWA to divert groundwater (untreated) to surface water if the total dewatering flow exceeds the system design of either 5,000 or 6,900 gpm or the treatment system is shut off for maintenance.

## 2.2 RISK ANALYSIS

Risks associated with perchlorate in drinking water have been documented through investigations and toxicological studies on animals and humans by the United States Environmental Protection Agency (USEPA), and the National Research Council (NRC). Health impacts of perchlorate ingestion include impaired thyroid function, and are discussed in further detail in the NRC report "Report in Brief: Health Implications of Perchlorate Ingestion" (National Research Council, 2005) and the EPA's report "Toxicological Review and Risk Characterization (External Review Draft)" (USEPA, 2002.). The USEPA has issued guidance regarding action levels based on the results of risk assessment studies conducted. Based upon USEPA's 1999 interim guidance, NDEP established 0.018 ppm perchlorate as a provisional action level for drinking water. The Bureau of Water Pollution Control has used 0.018 ppm as a discharge standard through the NPDES permit system; it is likely that 0.018 ppm will be the permit requirement for perchlorate for this project.

# 3.0 REMOVAL ACTION OBJECTIVES

## 3.1 SCOPE AND PURPOSE

The scope of this EE/CA is directed at treatment of groundwater extracted during weir construction dewatering activities to meet the current Nevada provisional MCL for perchlorate of 0.018 ppm. Treatment alternatives developed in subsequent sections focus on options to reduce perchlorate concentrations in impacted groundwater to surface water discharge limits, defined to be 0.018 ppm based on the limit likely to be imposed in a NPDES permit for the proposed groundwater discharge after treatment.

The long-term objective of this project will be to develop a detailed design for groundwater conveyance and treatment, and construct necessary systems to treat extracted groundwater prior to SNWA initiation of construction activities at the Sunrise Mountain and Historic Lateral weirs to allow groundwater extracted during weir construction dewatering activities to be discharged back to the Las Vegas Wash. Discharge of extracted groundwater will require an NPDES permit, which will in turn require that extracted groundwater be treated to surface water discharge standards prior to discharge. The current NPDES permit (#NV0023060) issued to NERT for discharge of treated groundwater at the NERT site serves as an indicator of potential discharge limits and monitoring requirements for weir construction dewatering activities.

## 3.2 JUSTIFICATION FOR PROPOSED ACTION

The development of this EE/CA and analysis of conveyance and treatment options for perchlorate-impacted groundwater extracted from weir construction dewatering operations has been ordered by NDEP. Treatment of groundwater will be required to meet surface water NPDES discharge requirements, based on the analysis of historic groundwater in the vicinity of the Sunrise Mountain and Historic Lateral weir construction projects. As indicated in the Order, direct discharge of the groundwater extracted during weir construction dewatering without treatment would substantially contribute to continued exceedance of the current Nevada provisional MCL for perchlorate of 0.018 ppm within the Las Vegas Wash. The Las Vegas Wash is tributary to Lake Mead, the primary drinking water source for the Las Vegas Valley, and the Colorado River, which is a significant source of drinking water for populations in Arizona and Southern California. Any increase in perchlorate loading to the Las Vegas Wash would threaten these drinking water sources.

## 3.3 RESPONSE GOALS

### 3.3.1 Applicable or Relevant and Appropriate Requirements (ARARs)

ARARs that must be met by the proposed treatment plant and for the construction and siting of the water conveyance system are defined, in part, by the NDEP Order to treat extracted groundwater from weir dewatering operations to meet the MCL for perchlorate of 0.018 ppm prior to discharge within the Las Vegas Wash. The NDEP specified assumed limitations for dewatering flowrates require that extracted groundwater between the two weirs, constructed simultaneously, not exceed 6,900 gpm.

Additional local, state, and federal regulatory requirements include:

- Compliance with threatened and endangered species protections;
- Compliance with standards to discharge to surface water;
- Protection for cultural resources; and
- Compliance with local, state, and federal permit approvals.

Threatened and endangered species protections were outlined in Section 2.1.1.5, and preliminary siting for the purposes of this EE/CA has been conducted to avoid areas identified as known tortoise habitat in the 2009

Biological Opinion and as shown on Figure 4. Compliance with worker health and safety requirements are required during all phases of the project, including acquisition of Site data, final design, and particularly during construction and operations, when opportunities for physical injury increase. Rigorous health and safety programs addressing requirements and risk mitigation approaches will be adhered to by all contractors and subcontractors affiliated with the project in order to comply with all local, state, and federal requirements.

A detailed analysis of permit approvals for each jurisdiction in which the treatment plant or conveyance pipeline will reside will need to be conducted through a permitting workplan in the next phase of the project and confirmed through agency consultation. In general, the initial list of anticipated permits or approvals is shown below.

City of Henderson

- Air permit (if a combustion source is used for the treatment facility);
- Site plan review;
- Building permit;
- Grading geotechnical report;
- Grading permit;
- Dust control permit;
- Construction stormwater permit; and
- Traffic Control Plan.

Clark County

- Receiving points and pipelines for the treatment system would be located on land showing BOR surface ownership and Clark County jurisdiction. BOR surface ownership more typically coincides with BOR jurisdiction and permit approvals. To clarify the jurisdiction for this portion of the project area, Tetra Tech contacted Clark County Comprehensive Planning on July 22, 2016 to discuss permitting jurisdiction with senior planner, Dave Klein. Clark County indicated that the affected area normally would default to the county as a parcel within unincorporated Clark County but that a remediation-specific project could, instead, defer to BOR. Jurisdiction will need to be confirmed through agency consultation and could result in Clark County permit requirements, including:
    - Land use and zoning review;
    - Building permit;
    - Grading permit;
    - Dust control permit; and
    - Flammable/combustible liquid storage.

  The Trust will secure all necessary permits from BOR and Clark County for the selected dewatering treatment system and pipeline conveyance for the weir construction project.

State

- Construction stormwater;
- NPDES discharge permit;
- Spill Prevention Control and Countermeasure Plan if oil/petroleum product storage capacity exceeds 1,320 gallons; and
- State listed species desktop review.

Federal

- Right-of-way for pipelines;

- Compliance with the National Environmental Policy Act (NEPA), including potential categorical exclusion from an environmental assessment if available for impacts considered temporary or less than significant in size;
- Clean Water Act, Section 404 permitting for waters of the US or wetlands impacted by pipeline construction;
- Cultural resources, on-site and desk-top review for concurrence from the State Historic Preservation Office; and
- Biological Opinion from desktop review of USFWS listed species.

In parallel with the development of this EE/CA, land access negotiations for private land access and permitting acquisition efforts are underway in order to obtain necessary access and permits for the construction of the treatment and conveyance alternatives selected within the required timeframe presented by SNWA. The Trust will secure all necessary permits from BOR, NDEP, Clark County, and City of Henderson for the selected dewatering treatment system and pipeline conveyance for the weir construction project.

### 3.3.2 Groundwater and Surface Water

As all extracted groundwater will be discharged to surface water, response goals are defined only for discharge to surface water. Permits under Clean Water Act Sections 401 (water quality certification), 402 (NPDES) and 404 (wetlands and waters of the US) will be required for surface discharge of treated water and for pipeline locations with temporary impacts to wetlands or waters of the US. A general construction stormwater permit and development of a Stormwater Pollution Prevention Plan (SWPPP) is required for construction activities disturbing more than one-acre of land.

### 3.3.3 Treatment System Byproduct

Treatment system byproducts (i.e., spent materials, concentrate solutions, etc.) must be managed in accordance with solid and hazardous waste requirements for characterization, storage, transport, and disposal. These byproducts will be sampled and analyzed. The analytical results will be used to characterize the byproducts using a waste profile for proper disposal in accordance with requirements under the federal Resource Conservation and Recovery Act and any applicable state requirements.

# 4.0 DEVELOPMENT & INITIAL SCREENING OF REMOVAL ACTION ALTERNATIVES

## 4.1 IDENTIFICATION OF ALTERNATIVES

The purpose of identifying and screening treatment system locations, water conveyance, and water treatment alternatives is to eliminate siting options and treatment technologies that are obviously unfeasible, ineffective, or cost prohibitive while retaining potentially effective options. The identification and screening of alternatives required a detailed review of existing data on water quality, historic dewatering flow rates and regimes, and a high-level review of permit constraints impacting siting of the treatment plant locations.

This section presents potential alternatives developed to address concerns at the Site followed by a brief discussion of alternatives selected to be carried forward for final analysis.

### 4.1.1 Treatment System Location & Water Conveyance

Many treatment system locations and water conveyance options are possible, including, but not limited to the treatment of water from the Sunrise Mountain and Historic Lateral Weirs at:

1. A single, combined treatment facility with water conveyance from each weir to the combined treatment facility, including either:
    a. Treatment facility located on the north side of the Las Vegas Wash, west of Sunrise Mountain Weir, between Sunrise Mountain Weir and the Historic Lateral Weir, or east of the Historic Lateral Weir; or
    b. Treatment facility located on the south side of the Las Vegas Wash, west of Sunrise Mountain Weir, between Sunrise Mountain Weir and the Historic Lateral Weir, or east of the Historic Lateral Weir.
2. Two treatment facilities, one located near to each weir, with limited water conveyance, including either:
    a. Treatment facilities located on the north side of the Las Vegas Wash; or
    b. Treatment facilities located on the south side of the Las Vegas Wash; or
    c. One treatment facility located on the north side of the Las Vegas Wash, and one treatment facility located on the south side of the Las Vegas Wash.

Two decentralized treatment systems were initially considered, but due to the high capital costs of building two treatment plants each with the capacity to treat the maximum SNWA dewatering rate, NDEP directed NERT to only consider a centralized treatment plant option. Factors considered in facility siting include:

1. Accessibility: The SNWA will handoff the water generated by the dewatering operations for each weir on the southern side of the wash. Since the Trust intends to convey water in aboveground pipelines, access from the handoff locations to the centralized treatment facility will be more efficient on the southern side of the wash relative to the north side of the Las Vegas Wash.
2. Proximity to sensitive species: As discussed in Section 2.1.1.5 and as shown in Figure 4, desert tortoise habitat is more prevalent on the north side of the Las Vegas Wash than on the south side. The presence of this habitat can be considered to exclude those areas from treatment plant locations or conveyance pipeline alignments. As a result, more options for pipeline conveyance alignments and treatment plant locations exist on the south side of the Las Vegas Wash than on the north side.
3. Availability of power supply: Temporary power would need to be supplied to any treatment plant locations on the north side of the Las Vegas Wash or on the south side of the Las Vegas Wash at the Historic Lateral. Power is available at Lift Station #1, located southeast of the Sunrise Mountain Weir.



ED_002461_00004015-00026

4. Permitting requirements: Permit requirements vary by location based on the jurisdiction (City of Henderson, Clark County, BOR) regulating the affected parcels. Zoning designations for individual parcels also determine whether the treatment facility and pipelines are an allowed use or require a conditional use approval. Other requirements for building, grading, dust control, stormwater, and NPDES tend to apply, regardless of jurisdiction. The BOR's level of NEPA review must be confirmed with the agency.

### 4.1.2 Treatment Technology Alternatives

Treatment technologies that have effectively remediated perchlorate contaminated groundwater include biological and physical/chemical treatment systems. Biological treatment systems including fluidized bioreactors, continuous stirred tank reactors, sequencing batch reactors, and fixed film reactors have successfully treated groundwater contaminated with perchlorate. Physical/chemical processes including strong base anion and weak base anion ion exchange resins, modified activated carbon and tailored activated carbon, and reverse osmosis also have successfully treated perchlorate contaminated water.

## 4.2 INITIAL ALTERNATIVE SCREENING AND SELECTION

The initial screening and selection of alternatives provides a review of the treatment system locations and treatment technologies to reduce the alternatives to those that would be most effective, implementable, cost efficient, and meet infrastructure and operational needs. Alternatives retained were selected as those most likely to meet project goals and objectives which generally include:

- Mitigate human health and environmental risks, to the extent possible;
- Treat extracted groundwater to meet surface water discharge limits for perchlorate; and
- Achieve construction completion within the defined timeline (by May 2017).

### 4.2.1 Treatment Plant Screening

NDEP directed NERT to only consider the centralized treatment plant option, based on the higher capital costs associated with building two treatment facilities. The siting alternatives for the treatment plant were limited to the south side of the Las Vegas Wash due to: the SNWA handoff points located on the south side of the wash, the less extensive desert tortoise habitat on the south side of the wash (compared to the north side), and the availability of power proximal to Lift Station #1 on the south side of the wash. Accordingly, the only treatment plant location and conveyance siting option forwarded to the detailed analysis phase is the combined treatment plant and associated water conveyance necessary for a treatment plant located on the south side of the Las Vegas Wash near Lift Station #1. This option is shown in Figure 5.

### 4.2.2 Treatment Alternative Technology Screening

This section presents a preliminary screening of the biological and physical/chemical treatment systems that have successfully remediated perchlorate contaminated water.

#### 4.2.2.1 Biological Treatment

Biological treatment of perchlorate is a successfully commercialized technology that uses bacterial cultures to anoxically degrade perchlorate to chloride. Under favorable conditions, the denitrifying anaerobes can reduce perchlorate to chloride, water and carbon dioxide. The basic requirements for bacterial metabolism are:

- Energy source;
- Electron acceptor;
- Carbon source;
- Macronutrients;

- Minerals; and
- Amino acids

Microbial degradation of perchlorate proceeds according to the following anoxic reduction process:

$$ClO_4^- \rightarrow ClO_3^- \rightarrow ClO_2^- \rightarrow Cl^- + O_2$$

(Perchlorate) (Chlorate) (Chlorite) (Chloride) (Oxygen)

The rate limiting step in this process is the degradation of perchlorate to chlorate. Biological treatment of perchlorate can occur in different reactor configurations such as fluidized bed reactors (FBRs) or packed bed reactors. The FBRs and packed bed reactors use different support media such as granular activated carbon (GAC), sand or other plastic media to support biomass accumulation.

Packed bed reactors use static sand or plastic media for supporting microbial growth. FBRs use media such as GAC that is suspended in a reactor column by the upward flow of water in the column. FBRs provide a large surface area for microbial growth. As perchlorate degradation continues, the fluidized bed expands with increased biological growth on the media; consequently, FBRs allow for a higher biomass density compared to other reactor configurations. The Trust is experienced in using FBRs to treat perchlorate-contaminated groundwater. The NERT site groundwater extraction and treatment system uses FBRs to biologically remove perchlorate, chlorate, and nitrate from the extracted groundwater.

Biological processes for perchlorate treatment include the following operations: 1) equalization tanks to reduce the fluctuations in the hydraulic and mass loads entering the process, 2) one or more packed or suspended growth bioreactors that operate under anoxic mode (absence of molecular oxygen), 3) solid-liquid separation equipment (e.g. clarifiers, dissolved air flotation units), and 4) sludge dewatering systems. Biodegradation of perchlorate generates biomass which is separated from the treated water using solids-liquid clarification equipment. Sludge dewatering is used to reduce the quantity of sludge that requires disposal.

The following factors affect the successful biological treatment of perchlorate:

- Hydraulic and mass loads of contaminants;
- Temperature; and
- pH.

The biological treatment of perchlorate requires the absence of molecular oxygen and the presence of bacteria with a carbon source and nutrients, which will reduce the perchlorate to chloride ions. Fluctuations in the flow rate and composition of water to be treated may cause shock loads in the biological process; equalization tanks are used to reduce these fluctuations. The equalization tanks may also be used to control both the temperature and pH, as the bacteria require a specific range of each to function effectively.

Biological treatment is one of the more effective and technically viable perchlorate treatment processes and is effective treating perchlorate at concentrations ranging from 0.05 ppm to over 5,000 ppm.

### 4.2.2.2 Ion Exchange Treatment

Ion exchange treatment is also a successfully commercialized technology that removes perchlorate from contaminated water. Ion exchange is a physico-chemical process where one or more contaminants are held electrostatically on the surface of a solid and are exchanged for ions of similar charge in a solution. Ion exchange materials typically consist of resins made from materials that contain ionic functional groups to which exchangeable ions are attached. For perchlorate treatment, resins are attached with ions such as chlorides and hydroxides which can replace the perchlorate ion in the contaminated water.

Ion exchange resins are typically packed into columns and as contaminated water flows through the columns, ions attached to the resins replace the perchlorate ion from the water and the perchlorate ion binds to the resin.

The effectiveness of this process is highly dependent on the type of the resin and the other contaminants present in the water.

Resins used for ion exchange treatment can either be strong base anion (SBA) exchange resins or weak base anion (WBA) exchange resins. SBA resins have very high selectivity for the perchlorate ion, but the resins cannot be regenerated for re-use. Accordingly, once the resin is spent, it must be either incinerated or landfilled as a hazardous or non-hazardous waste. The frequency at which SBA resins must be replaced depends on the mass loading of perchlorate and other contaminants in the water.

WBA exchange resins have lower selectivity for perchlorate ion compared to SBA exchange resins, but the spent WBA resin can be regenerated for re-use. A solution containing chloride or hydroxide ions can be used to regenerate the spent resins; the resultant waste solution can be disposed off-site, treated using a biological process, or treated using an SBA. Ion exchange resins are regenerated using the following steps:

1. Backwashing
2. Regenerating the resin
3. Rinsing to remove the residual regenerating solution

The volume of backwash solution produced during WBA resin regeneration ranges from 1.5 to 10 percent of the treated water volume, depending on the feed water quality and type of ion exchange resin used. Sodium chloride (NaCl), ammonium hydroxide ($NH_4OH$), ferric chloride-hydrochloric acid ($FeCl_3$ -HCl) and sodium hydroxide (NaOH) are some common compounds used for regenerating perchlorate-laden resins. The regeneration process may require 3 to 5 bed volumes of regenerant solution and 2 to 3 bed volumes of water for rinsing. Waste streams generated during the regeneration process may contain high levels of perchlorate that will need to be treated prior to discharge.

Pre-treatment may be needed to remove suspended solids from the water before ion exchange treatment to remove perchlorate. Ion exchange columns are typically in a lead/lag configuration; as the resin in the lead column is spent, the concentration of perchlorate in the water exiting the lead column gradually increases. When the lead column is taken out of the treatment sequence for resin replacement, the lag column is moved to the lead column position. A new resin column is placed in the lag column position. Therefore, treatment continues while the spent resin is either replaced or regenerated.

Factors affecting the performance of ion exchange treatment include hydraulic load and contaminants mass loads. The presence of competing ions such as sulfate ($SO_4^-$), nitrate ($NO_3^-$), chlorate ($ClO_3^-$) and chloride ($Cl^-$) can interfere with the perchlorate ion exchange process and can significantly increase the quantity of resin needed for treatment. Ion exchange treatment is effective treating perchlorate at concentrations ranging from 0.05 ppm to 500 ppm. Hydraulic loading affects the frequency for resin replacement.

### 4.2.2.3 Activated Carbon Treatment

Granular activated carbon (GAC) can adsorb negatively charged ions, such as perchlorate. However, GAC is not very efficient at removing perchlorate from water. The adsorptive capacity of standard GAC can be improved by coating the GAC with a surface-active substance, typically a surfactant which produces a tailored GAC (tGAC). The surfactant creates a positively charged matrix on the GAC surface, which increases sites capable of attracting perchlorate ions. The most common surfactants used to coat GAC are quaternary ammonium compounds, which act as ion-exchange sites that adsorb the perchlorate. Other competing ions, such as sulfate, nitrate, chloride and chlorate, may also be attracted to the tGAC surface.

The effectiveness of the tGAC treatment system is dependent on the number of active sites available for perchlorate adsorption. Once all the active sites have been occupied by perchlorate (and other competing ions) the tGAC must be either replaced or regenerated by thermal reactivation which is typically performed off site in a

rotary kiln, fluidized bed or multiple hearth furnace. Laboratory-scale tests document that thermal reactivation of perchlorate laden tGAC restores 90% of the adsorptive capacity to the tGAC.

Treatment sequence in a tGAC system includes: equalization to reduce fluctuations in the flow rate and composition of water; filtration to remove suspended solids from the raw water; and, flow through lead/lag carbon beds. When the tGAC in the lead column is taken out of treatment for carbon replacement, the lag column will become the new lead column. The spent tGAC will be thermally reactivated off-site or landfilled/incinerated.

Activated carbon treatment of perchlorate contaminated water has occurred on a pilot-scale; however, full-scale activated carbon treatment has not been commercially demonstrated for perchlorate remediation. ToxSorb has developed a special modified activated carbon (MAC) media, engineered to have higher selectivity for the perchlorate ion while actively ignoring other competing ions. MAC has significantly increased the "lifespan" of the carbon used for perchlorate treatment. Carbon columns in a MAC treatment system also have a lead-lag configuration. ToxSorb has a commercial MAC unit that treats drinking water containing very low concentration of perchlorate (ppb levels); however, no data are available to demonstrate the effectiveness of the MAC technology when treating water with similar chemistry to that generated by the weir dewatering operations.

tGAC can be regenerated by thermal reactivation off-site; however, this generates a waste stream that requires an additional treatment unit, thus increasing the overall cost and footprint of the tGAC treatment system. The ToxSorb-MAC technology is feasible for low perchlorate concentrations (0.1 - 0.2 ppm); the effectiveness of this system at higher concentrations is unknown.

#### 4.2.2.4 Emerging Treatment Technologies

Emerging perchlorate treatment technologies include membrane filtration and electrodialysis. Membrane filtration treatment technologies, such as reverse osmosis and nanofiltration, use a semi-permeable membrane to remove undesired constituents from the water. These technologies are still being researched to evaluate their effectiveness for perchlorate removal. Membrane fouling from constituents in water, such as silica, calcium carbonate and carbon sulfate, can inhibit the effectiveness of this technology. Water is forced through the membrane pores, which produces a brine solution that requires appropriate disposal, and possibly treatment.

Electrodialysis is another emerging technology for treating perchlorate contaminated water. Water is passed through channels of alternating semi-permeable and permeable membranes under the influence of electric potential. The membranes are selective for the contaminants, such as perchlorate. This technology has been effective removing lower concentrations of perchlorate (0.015 - 0.13 ppm) from water in a pilot-scale plant; this technology has not yet been evaluated at full-scale at higher perchlorate concentrations.

The emerging technologies will not be further evaluated for treatment of the water generated from the weir dewatering operations since these technologies have not yet been demonstrated at full-scale operation remediating perchlorate concentrations in the range expected from the weir dewatering operations (up to 1.8 ppm).

#### 4.2.2.5 Treatment Technology Evaluation

Perchlorate treatment technology selection depends on several factors, including water quality, influent flow rate and regulatory compliance.

The perchlorate treatment technology effectiveness is evaluated on the ability to reduce the perchlorate concentrations to achieve the likely permit requirements for discharge to the Las Vegas Wash under a NPDES permit. As previously discussed, the Bureau of Water Pollution Control has used 0.018 ppm as a discharge standard through the NPDES permit system, and 0.018 ppm will likely be the permit requirement for perchlorate for this project. The effectiveness of the treatment technologies depend on the chemistry of the dewatered groundwater, including concentrations of perchlorate, TDS, and sulfate. The anticipated concentration ranges in the water generated from the weir dewatering operations include the following: perchlorate (1.3 to 1.8 ppm), TDS (3,050 to 4,150 ppm), and sulfate (1,175 to 1,700 ppm). The high concentrations of TDS and sulfate may impact



ED_002461_00004015-00030

the treatment efficiency. Biological treatment processes and ion exchange processes have both successfully treated water contaminated with perchlorate concentrations that range from 0.05 ppm to at least 500 ppm.

Factors affecting treatment costs include hydraulic and mass loads of perchlorate and other contaminants in the water. The main cost element in biological treatment of perchlorate is the carbon source, which is directly related to the concentration of perchlorate. Biological treatment of perchlorate usually has a high capital cost but a lower operating cost. The ion exchange treatment has a lower capital cost but high operating costs; high perchlorate concentrations result in high costs of SBA resin replacement and disposal.

The biological treatment technology is considered to be a suitable technology that will be carried forward in the analysis of alternatives. Biological treatment is effective at remediating perchlorate-contaminated water at the anticipated concentrations that will be generated during the weir dewatering operations (less than 2 ppm).

The ion exchange treatment technology is considered to be a suitable technology that will be carried forward in the analysis of alternatives. The efficiency of ion exchange remediating perchlorate is dependent on the amount of resin used during treatment and the disposition of the spent resin. The SBA resin has a higher selectivity for perchlorate (compared to the WBA resin) and can be effective in perchlorate removal at a higher resin replacement frequency. WBA resins have lower loading capacity compared to SBA resins; based on the water chemistry it is anticipated that WBA resin would need to be regenerated every 40 hours. The WBA resin is considered to be an unrealistic technology due to the extremely high operational costs to regenerate the spent resin at this frequency over an extended period of time. Accordingly, the WBA resin technology is eliminated from further evaluation of the weir dewatering treatment. The SBA resin is anticipated to need to be replaced every month during weir dewatering treatment. The maintenance costs associated with monthly SBA resin replacement (and disposal) over the period of treatment are considered to be feasible. Therefore, ion exchange using SBA resin will be carried forward in the analysis of alternatives.

The tGAC and MAC media treatment technologies have not been applied to full scale water treatment units for perchlorate concentrations similar to the water generated from the weir dewatering operations; accordingly these technologies are not considered to be suitable and are eliminated from further evaluation of the weir dewatering treatment.

# 5.0 ANALYSIS OF ALTERNATIVES

Removal action alternatives that passed the initial screening process in Section 4 have been carried forward for further analysis in this section. Only one treatment plant location and conveyance siting option was forwarded from the initial screening for the detailed analysis. Accordingly, the two treatment alternatives carried into this analysis have each been combined with the single plant location and conveyance siting. Table 3 presents the final list of alternatives for detailed evaluation. These alternatives represent a range of potential removal actions or process options that can meet, to some degree, removal action objectives (RAOs) for this project for a reasonable range of costs. This analysis is being presented in two phases, an individual analysis of alternatives (this section) followed by a comparative analysis of alternatives (Section 6).

The detailed evaluation includes a description of each alternative and an evaluation based on effectiveness, implementability, construction schedule, permitting requirements, and capital and operating cost. These criteria are described below.

## 5.1 EVALUATION CRITERIA

This section presents a review of the evaluation criteria used for this analysis of removal action alternatives.

### 5.1.1 Effectiveness

According to USEPA guidance for non-time-critical removal actions (USEPA 1993), the effectiveness of an alternative should be evaluated by the following criteria:

- Long-term and short-term effectiveness and permanence;
- Overall protection of human health and the environment;
- Reduction of toxicity, mobility, or volume through treatment; and
- Compliance with ARARs.

The ability of each alternative to meet RAOs is considered when evaluating these criteria. For conveyance and treatment plant location alternatives, effectiveness was gauged primarily by the ability of an alternative to successfully route water for treatment to the desired location. For treatment alternatives, effectiveness was gauged primarily by the ability of an alternative to remove perchlorate such that groundwater extracted during dewatering meets likely applicable NPDES permit limits and may be discharged directly into the Las Vegas Wash.

### 5.1.2 Implementability

Implementability addresses the technical and administrative feasibility of implementing an alternative and availability of various services and materials required to accomplish its implementation. Technical feasibility considerations include the applicability of the alternative to the contaminant source, availability of the required equipment and expertise to implement the alternative, and overall reliability of the alternative. In particular, the alternative evaluation with respect to implementability includes:

- Construction considerations including availability of manpower, equipment, and materials required for implementation;
- Infrastructure requirements (e.g. power supply, utility connections, if available);
- Reliability and simplicity or complexity of the operation and the required maintenance; and
- Accessibility (including access agreements provided by SNWA and land ownership).

Implementability also considers the appropriateness of combinations of alternatives based on site-specific conditions. Administrative feasibility typically evaluates other logistical constraints, such as required permits.

### 5.1.3 Construction Schedule

While scheduling constraints can be considered part of administrative feasibility, schedule was brought forward as an independent evaluation criteria by NDEP. Construction schedule is a critical element for evaluating the alternatives based on the tightly constrained schedule and short lead time for implementation of treatment alternatives required by SNWA's proposed schedule for construction of the Sunrise Mountain and Historic Lateral weirs As construction of the SNWA weirs is anticipated to begin in June 2017, the Trust has been directed to develop a schedule that includes completing dewatering treatment system construction by May 2017 and system commissioning in May 2017. The treatment system will be ready to receive and treat water by June 1, 2017; however, the Trust will not be able to modify or direct the SNWA contractors throughout the project's implementation.

### 5.1.4 Permitting Requirements

While permitting requirements can be considered part of administrative feasibility, permitting requirements were included as an independent evaluation criteria to evaluate the relative permitting burden associated with the various alternatives considered. This evaluation assessed permits required, permitting schedule, and relative level of effort to complete permit applications. Locations for siting the treatment facility were preferentially selected based upon the evaluation of permitting time, such that the preferred locations would not require lengthy permitting processes.

The Trust will secure all necessary permits from BOR, NDEP, Clark County, and City of Henderson for the selected dewatering treatment system and pipeline conveyance for the weir construction project.

### 5.1.5 Capital and Operating Cost Estimates

Evaluating the cost of alternatives involves developing conservative cost estimates based on the materials needed and the construction elements associated with implementing the alternative. These costs do not necessarily represent the cost that may actually be incurred during construction of the alternative because many design details are preliminary at this EE/CA stage of analysis. However, a similar set of assumptions is used for all the alternatives so that the relative differences in cost between alternatives are fairly represented.

The cost estimates were developed consistent with a Class 5 cost estimate as described in American Society of Testing and Materials (ASTM) Standard E2516-11. Select direct costs were developed based on estimated quantities and unit costs, while other costs were included as percentages of the direct costs estimated deterministically. Unit costs were developed by analyzing data available from nationally published cost estimating guides. Cost data principally incorporates past engineering experience, including actual operating costs and unit costs that have been realized during similar projects. Unit costs for construction, often referred to as hard costs, are based on assessments of construction techniques, equipment, Site accessibility, material handling distances and methods as well as Site conditions. A construction contingency was added to the subtotal of all the construction costs. Soft costs which include construction administration, surveying and engineering costs were valued at a percentage of the total construction costs estimate.

At the direction of NDEP, capital and operating cost estimates were presented for two scenarios:

- Scenario A: Centralized treatment capable of treating simultaneous inflows from both weir projects, requiring concurrent treatment of water produced from construction of both the Sunrise Mountain and Historic Lateral weirs, not to exceed a combined 5,000 gpm; and
- Scenario B: Centralized treatment capable of treating simultaneous inflows from both weir projects, requiring concurrent treatment of water produced from construction of both the Sunrise Mountain and Historic Lateral weirs, not to exceed a combined 6,900 gpm.

The total estimated cost is expected to be within plus 50% and minus 30% of actual costs, commensurate with the conceptual level of design available at this level of evaluation consistent with a Class 5 cost estimate for screening and feasibility purposes as defined in ASTM Standard E2516-11. Total costs for each alternative are presented in the cost discussion for each alternative with the supporting unit cost spreadsheets presented in Appendix B.

## 5.2 EVALUATION OF ALTERNATIVES

This section evaluates the removal action alternatives using the criteria identified in Section 5.1. The only treatment plant location and conveyance siting option forwarded to the detailed analysis phase is the combined treatment plant and associated water conveyance necessary for a treatment plant located on the south side of the Las Vegas Wash near Lift Station #1, as shown in Figure 5. This option includes: two pump stations, one at the eastern side of the SNWA construction staging area at the Sunrise Mountain Weir and the second at the southern side of the SNWA construction staging area at the Historic Lateral Weir, two surface-laid influent conveyance pipelines from each pump station to the treatment plant, and a surface-laid effluent pipeline from the treatment plant to discharge to the Las Vegas Wash just east of the Sunrise Mountain Weir. The treatment plant location and conveyance siting have been combined with each of the treatment technologies, which consist of biological treatment and SBA ion exchange treatment. Both of these are demonstrated treatment technologies that are capable of remediating the anticipated perchlorate concentrations (up to 1.8 ppm) and the anticipated hydraulic flow ranges (from 0 to 6,900 gpm). The biological treatment option includes an equalization tank, biological reactors, storage tanks, nutrient tanks, sludge management system and pumps. The SBA treatment option includes multi-media filter tanks, ion exchange resin vessels, storage tanks, and transfer pumps.

### 5.2.1 Alternative 1 – Biological Treatment Plant

Alternative 1 includes a biological treatment plant located on the south side of the Las Vegas Wash near Lift Station #1. This includes: two pump stations, one at the eastern side of the SNWA construction staging area at the Sunrise Mountain Weir and the second at the southern side of the SNWA construction staging area at the Historic Lateral Weir, two surface-laid influent conveyance pipelines from each pump station to the treatment plant, and a surface-laid effluent pipeline from the treatment plant to discharge to the Las Vegas Wash just east of the Sunrise Mountain Weir. This biological treatment option includes an equalization tank, biological reactors, storage tanks, nutrient tanks, sludge management system and pumps.

#### 5.2.1.1 Effectiveness

The biological treatment plant located on the south side of the Las Vegas Wash near Lift Station #1 and associated water conveyance will allow conveyance to be effective throughout the duration of the project. As discussed below, biological treatment is not considered to be an effective technology for the weir dewatering treatment. The project itself is proposed to be temporary, lasting only as long as dewatering operations are required for weir construction. Thus long-term application and permanent effectiveness are not applicable to this project. This siting option provides overall protection of human health and the environment, and the treatment technology provides reduction of toxicity, mobility, or volume of perchlorate. This alternative can also be performed so as to comply with all ARARs, including without limitation requirements related to the protection of endangered or threatened species and cultural resources, as well as obtaining and complying with all necessary permits. The treatment plant and associated conveyance is located in close proximity to the Las Vegas Wash to minimize conveyance distance. Secondary containment or equivalent measures will be used at both the transfer stations and at the treatment plant, in accordance with regulations to protect the environment in the vicinity of the project.

Biological treatment of water from the weir dewatering operations is not considered to be an effective technology due to the anticipated fluctuations in the water flow rates which range from 0 to 6,900 gpm. Historic dewatering



ED_002461_00004015-00034

operations associated with previous weirs constructed along the Las Vegas Wash indicated it is common for there to be some zero-flow days during weir construction. The historic dewatering data indicated the minimum non-zero dewatering flow rate may range from 3 to 25 gpm (Table 2). The zero or low flow rates could be mitigated by storing approximately 1 day of flow; this water could be used to maintain the biological treatment system during one or two days of zero or minimum flow. A 10 million gallon equalization tank could be used to balance the flow rates, but may not provide sufficient capacity depending on the number of days of no-flow or low-flow conditions. The volume of this tank is based upon the NDEP-directed maximum flow rate of 6,900 gpm for a period of 24 hours, which would generate 9.94 million gallons of water.

### 5.2.1.2 Implementability

The pump stations located on the south side of the Las Vegas Wash and the biological treatment plant located on the south side of the Las Vegas Wash near Lift Station #1 with associated water conveyance are implementable. Utility connections are available at the adjacent Lift Station #1 and access is available from the south (using same access as has been negotiated for Lift Station #1). Access for the pump stations and for the conveyance pipelines will require easements and negotiation with the BOR. The single biological treatment plant located on the south side of the Las Vegas Wash with associated water conveyance is constructible, with adequate manpower, equipment and materials available for implementation. Access for the treatment facility will require easements and negotiation with Basic Environmental Co. LLC (Basic Environmental). As noted below in the construction schedule section, the 10 million gallon equalization tank will require more than one year to construct, which is not feasible for this weir dewatering implementation schedule. This option would have relatively simple operation and maintenance, based on proximity to similar systems, and a centralized location for treatment with ready vehicle access. Maintenance along the temporary conveyance pipeline alignment will require a surface access road adjacent to the pipelines and to the pump stations to conduct maintenance, as required.

### 5.2.1.3 Construction Schedule

The schedule for constructing a biological treatment plant located on the south side of the Las Vegas Wash near Lift Station #1 and associated water conveyance would be dictated by long-lead items, which include:

- Treatment plant special order items, including reactor columns with bacterial cultures and a 10 million gallon equalization tank. Constructing an equalization tank with 10 million gallon capacity may take more than one year, which is not feasible for the current project implementation schedule.
- Permitting requirements, including accessing BOR land and obtaining an NPDES Permit from NDEP to discharge treated water to the Las Vegas Wash.

These long-lead items represent critical path elements for construction. Actual implementation of construction for the piped conveyance and treatment plant would be rapid (with the exception of the equalization tank) based upon the following considerations:

- The conveyance system is temporary, and will not require buried pipes or significant surface pipeline supports
- The treatment plant will be comprised of many pre-packaged items, which will then be readily assembled in the field once delivered.

The biological treatment of the water from the weir dewatering operations is considered to be ineffective and not implementable, due to the anticipated significant variation in the flowrate and the time required to construct the equalization tank. A potential construction schedule for this alternative has not been generated since this alternative does not meet the evaluation criteria.



ED_002461_00004015-00035

### 5.2.1.4 Permitting Requirements

Obtaining access and specific permitting requirements will depend upon the final approved locations of the proposed treatment facilities and conveyance pipeline alignments, since jurisdiction varies by parcel. The treatment plant, as currently proposed, would be located on the south side of the Las Vegas Wash near Lift Station #1 within City of Henderson jurisdiction. Water conveyance pipelines would be located on land administered by the BOR, within unincorporated Clark County. Jurisdiction and potential NEPA requirements must be confirmed with the agencies.

The two long-lead permitting requirements include obtaining BOR access for the water conveyance system and obtaining an NPDES Permit for discharge of treated water to the Las Vegas Wash. The biological treatment of the water from the weir dewatering operations is considered to be ineffective and not implementable, due to the anticipated significant variation in the flowrate and the time required to construct the equalization tank. A potential permitting schedule for this alternative has not been generated since this alternative does not meet the evaluation criteria.

### 5.2.1.5 Capital and Operating Cost Estimates

A single biological treatment plant located on the south side of the Las Vegas Wash near Lift Station #1 and associated water conveyance represents the most cost-effective option, as two biological treatment plants of the same size (in the instance of both weirs being constructed concurrently) are not required. The influent and effluent conveyance pipelines measure approximately:

- 1,000 feet from the Sunrise Mountain weir handoff location to the proposed treatment plant,
- 4,200 feet from the Historic Lateral weir handoff location to the proposed treatment plant, and
- 1,000 feet from the proposed treatment plant to the discharge location at the Las Vegas Wash.

There will be two pump stations to transfer the water from each weir dewatering operation to the biological treatment plant; each pump station will require a space of approximately 65 x 105 feet, and will include three baker tanks and three pumps to transfer the water to the combined treatment plant location. The combined biological treatment plant location is estimated to require a space of approximately 400 x 400 feet, and will include an equalization tank, biological reactors, nutrient tanks, baker tanks equipped with mixer, pumps, compressors, and control panels.

The biological treatment plant may have on-site disposal of solids; biodegradation of perchlorate generates biomass that would be collected, stored and re-combined with the treated effluent, to ensure the total suspended solid (TSS) concentration in the discharge will be less than 135 ppm, before being discharged into the Las Vegas Wash. The discharge permit may prohibit discharging biomass into the Las Vegas Wash and if so, the biomass must be collected, thickened, dewatered and sent off-site for disposal.

<u>Cost Scenario A: Simultaneous Construction of the Sunrise Mountain and Historic Lateral Weirs with a flow rate not to exceed 5,000 gpm</u>

The capital cost to construct the biological treatment plant and conveyance system, with on-site solids management, is approximately $27.7M. The monthly operating cost for this system is approximately $0.30M. The 12 month operating cost for this system is approximately $3.8M (including equipment mobilization and demobilization). This operating cost assumes the construction of the two weirs will be completed within 12 months.

Appendix B presents detailed cost spreadsheets supporting these unit costs.

<u>Cost Scenario B: Simultaneous Construction of the Sunrise Mountain and Historic Lateral Weirs with a flow rate not to exceed 6,900 gpm</u>

The capital cost to construct the biological treatment plant and conveyance system, with on-site solids management, is approximately $27.7M. The monthly operating costs for this system is approximately $0.34M (including equipment mobilization and demobilization). The 12 month operating cost for this system is approximately $4.2M (including equipment mobilization and demobilization). This operating cost assumes the construction of the two weirs will be completed within 12 months.

Appendix B presents detailed cost spreadsheets supporting these unit costs.

## 5.2.2 Alternative 2 – SBA Ion Exchange Treatment Plant

Alternative 2 includes an SBA ion exchange treatment plant located on the south side of the Las Vegas Wash near Lift Station #1. This includes: two pump stations, one at the eastern side of the SNWA construction staging area at the Sunrise Mountain Weir and the second at the southern side of the SNWA construction staging area at the Historic Lateral Weir, two surface-laid influent conveyance pipelines from each pump station to the treatment plant, and a surface-laid effluent pipeline from the treatment plant to discharge to the Las Vegas Wash just east of the Sunrise Mountain Weir. The SBA treatment plant includes multi-media filter tanks, ion exchange resin vessels, storage tanks, and transfer pumps.

### 5.2.2.1 Effectiveness

The SBA ion exchange treatment plant located on the south side of the Las Vegas Wash near Lift Station #1 and associated water conveyance will allow treatment and conveyance to be effective throughout the duration of the project. The project itself is proposed to be temporary, lasting only as long as dewatering operations are required for weir construction. Thus long-term and permanent effectiveness are not applicable to this project. This siting option provides overall protection of human health and the environment, and the treatment technology provides reduction of toxicity, mobility, or volume of perchlorate. This alternative can also be performed so as to comply with all ARARs, including without limitation requirements related to the protection of endangered or threatened species and cultural resources, as well as obtaining and complying with all necessary permits. The treatment plant and associated conveyance is located in close proximity to the Las Vegas Wash to minimize conveyance distance. Secondary containment or equivalent measures will be used at both the transfer stations and at the treatment plant, in accordance with regulations to protect the environment in the vicinity of the project. SBA ion exchange treatment is capable of performing effectively at varying flow rates, which may be encountered during the weir dewatering operations.

### 5.2.2.2 Implementability

The pump stations located on the south side of the Las Vegas Wash and the SBA ion exchange treatment plant located on the south side of the Las Vegas Wash near Lift Station #1 with associated water conveyance is implementable; utility connections are available at the adjacent Lift Station #1 and access is available from the south (using same access as has been negotiated for Lift Station #1). Access for the pump stations and for the conveyance pipelines will require easements and negotiation with the Bureau of Reclamation. The single SBA ion exchange treatment plant located on the south side of the Las Vegas Wash with associated water conveyance is constructible, with adequate manpower, equipment and materials available for implementation. Access for the treatment facility will require easements and negotiations with Basic Environmental. This option also represents relatively simple operation and maintenance, based on proximity to similar systems, and a centralized location for treatment with ready vehicle access. Maintenance along the temporary conveyance pipeline alignment will require a surface access road adjacent to the pipelines and to the pump stations to conduct maintenance, as required.

### 5.2.2.3 Construction Schedule

The schedule for constructing the SBA ion exchange treatment plant located on the south side of the Las Vegas Wash near Lift Station #1 and associated water conveyance will be dictated by long-lead items, which include:

- Treatment plant special order items, including multi-media filter tanks and SBA ion exchange vessels;
- Permitting requirements, including accessing BOR land and obtaining an NPDES Permit from NDEP to discharge treated water to the Las Vegas Wash.

These long-lead items represent critical path elements for construction. Actual implementation of construction for the piped conveyance and treatment plant will be rapid based upon the following considerations:

- The conveyance system is temporary, and will not require buried pipes or significant surface pipeline supports
- The treatment plant will be comprised of many pre-packaged items, which will then be readily assembled in the field once delivered.

The anticipated construction schedule, including long-lead items, is identified in Table 5.

### 5.2.2.4 Permitting Requirements

Obtaining access and specific permitting requirements will depend upon the final approved locations of the proposed treatment facilities and conveyance pipeline alignments, since jurisdiction varies by parcel. The SBA ion exchange treatment plant, as currently proposed, would be located on the south side of the Las Vegas Wash near Lift Station #1 within City of Henderson jurisdiction. Water conveyance pipelines would be located on land administered by the BOR, within unincorporated Clark County. Jurisdiction and potential NEPA requirements must be confirmed with the agencies.

The two long-lead permitting requirements include obtaining BOR access for the water conveyance system and obtaining an NPDES Permit for discharge of treated water to the Las Vegas Wash. The anticipated permit schedule associated with construction of the weir dewatering treatment plant and conveyance system is shown in Table 5.

### 5.2.2.5 Capital and Operating Cost Estimates

The SBA ion exchange treatment plant located on the south side of the Las Vegas Wash near Lift Station #1 and associated water conveyance represents the most cost-effective option, as two treatment plants of the same size (in the instance of both weirs being constructed concurrently) are not required. The influent and effluent conveyance pipelines measure approximately:

- 1,000 feet from the Sunrise Mountain weir handoff location to the proposed treatment plant,
- 4,200 feet from the Historic Lateral weir handoff location to the proposed treatment plant, and
- 1,000 feet from the proposed treatment plant to the discharge location at the Las Vegas Wash.

There will be two pump stations to transfer the water from each weir dewatering operation to the treatment plant; each pump station will require a space of approximately 65 x 105 feet, and will include three baker tanks and three pumps to transfer the water to the combined treatment plant location. The combined treatment plant location is estimated to require a space of approximately 200 x 200 feet, and will include multi-media filter tanks, ion exchange resin vessels, storage tanks, and transfer pumps.

<u>Cost Scenario A: Simultaneous Construction of the Sunrise Mountain and Historic Lateral Weirs with a flow rate not to exceed 5,000 gpm</u>

The SBA ion exchange treatment plant may have on-site disposal of solids generated at the multi-media filter, or off-site management of these solids, as further described in Section 7.4. The capital cost to construct the treatment plant and conveyance system, with on-site solids management, is $10.88M. The monthly operating cost

for this system (with on-site solids management) is $0.68M. The 12 month operating cost for this system is approximately $7.40M. This operating cost assumes the construction of the two weirs will be completed within 12 months.

The capital cost to construct the treatment plant and conveyance system, with off-site solids management, is $11.1M. The monthly operating cost for this system (with off-site solids management) is approximately $0.74M. The 12 month operating cost for this system is approximately $8.04M. This operating cost assumes the construction of the two weirs will be completed within 12 months.

Appendix B presents detailed cost spreadsheets supporting these unit costs.

Cost Scenario B: Simultaneous Construction of the Sunrise Mountain and Historic Lateral Weirs with a flow rate not to exceed 6,900 gpm

The capital cost to construct the treatment plant and conveyance system, with on-site solids management, is $10.88M. The monthly operating cost for this system (with on-site solids management) is approximately $1.01M. The 12 month operating cost for this system is approximately $11.3M. This operating cost assumes the construction of the two weirs will be completed within 12 months.

The capital cost to construct the treatment plant and conveyance system, with off-site solids management, is $11.1M. The monthly operating cost for this system (with off-site solids management) is approximately $1.07M. The 12 month operating cost for this system is approximately $12M. This operating cost assumes the construction of the two weirs will be completed within 12 months.

Appendix B presents detailed cost spreadsheets supporting these unit costs.

# 6.0 COMPARATIVE ANALYSIS OF ALTERNATIVES

A detailed comparison of the two alternatives presented in Section 5.2 is shown in Table 4.

Alternative 1 – Biological Treatment fails to meet the effectiveness and the implementability criteria. The bacteria in the reactors cannot survive extended periods of no-flow conditions and this would render the reactors ineffective for treatment of perchlorate contaminated water. The anticipated fluctuations in the weir dewatering flowrates range from 0 to 6,900 gpm; historic dewatering operations associated with previous weirs constructed along the Las Vegas Wash indicated it is common for there to be some zero-flow days during weir construction. The historic dewatering data indicated the minimum non-zero dewatering flow rate may range from 3 to 25 gpm. The zero or low-flow rates could be mitigated by storing approximately 1 day of flow; this water could be used to maintain the biological treatment system during one or two days of zero or minimum flow. A 10 million gallon equalization tank could be used to balance the flow rates, but may not provide sufficient capacity depending on the number of days of no-flow or low-flow conditions. Additionally, a tank of this capacity will take more than one year to construct, which is not feasible for the weir dewatering implementation schedule. The approximate capital and operating costs for 12 months of operation of this alternative are approximately 50% higher than the respective costs for Alternative 2. Alternative 1 – Biological Treatment is considered non-viable when compared to Alternative 2.

Alternative 2 – SBA Ion Exchange Treatment meets all the evaluation criteria. This is a commercially demonstrated technology remediating perchlorate-impacted groundwater at concentrations ranging from 0.05 ppm to 500 ppm. The equipment necessary to implement this alternative are available. The on-site management of solids generated from backwashing the multi-media filters is the recommended solids management, as it is more cost-effective than off-site management of the solids, as long as solids concentrations in the effluent meet the assumed maximum allowable solids concentration discharged to the Las Vegas Wash (135 ppm), consistent with the Trust's current NPDES Permit. The management of these solids is described further in Section 7.4. The approximate capital and operating costs for 12 months of operation of this alternative are significantly lower than the respective costs for Alternative 1.



ED_002461_00004015-00040

# 7.0 RECOMMENDED ACTION ALTERNATIVE

This section presents the Recommended Action Alternative (RAA) for conveyance and treatment of perchlorate impacted groundwater extracted during weir construction dewatering operations. The RAA is based on the comparative analysis of alternatives provided in Section 6, and includes the SBA ion exchange treatment plant and associated water conveyance located on the south side of the Las Vegas Wash near Lift Station #1.

## 7.1 DESCRIPTION OF THE TREATMENT PROCESS

The SBA ion exchange treatment process will consist of the following:

1) a pump station at each weir construction hand-off point, where contaminated groundwater will be received in storage tanks and transfer pumps will convey the water via above ground piping to the treatment plant;
2) pretreatment using multi-media filtration will remove suspended solids from the water before treatment for perchlorate;
3) SBA ion exchange treatment of water will remove perchlorate;
4) suspended solids management; and
5) temporary storage of treated water followed by discharge to the Las Vegas Wash via above ground piping.

Two treatment configurations are possible to manage the suspended solids removed by the multi-media filters, as described below:

1) The suspended solids will be backwashed from the multi-media filters, the backwashed solids will be contained in storage tanks, and re-blended with the treated effluent prior to the effluent being conveyed to the Las Vegas Wash (on-site solids management).
2) The suspended solids will be backwashed from the multi-media filters, the backwashed solids will be contained in storage tanks, the solids will be initially separated from the liquids in a clarifier, the thickened sludge will be transferred to holding tanks, and a centrifuge will be used to dewater the sludge. The dewatered cake will be transported off site for disposal (off-site solids management).

Figure 6 shows the preliminary process flow diagram for the treatment configuration with on-site solids management. Figure 7 shows the preliminary process flow diagram for the treatment configuration with off-site solids management. A more detailed description of each processing step is provided below.

### 7.1.1 Water Storage and Pump Station

As directed by NDEP, the treatment process will be designed for a combined maximum flow of 6,900 gpm from both weir construction sites. SNWA's weir construction subcontractor will be responsible to deliver water from the weir dewatering operation to the SNWA handoff location with a minimum head of 10 ft above the existing ground level.

Each pump station will include three Baker tanks to receive water from the weir construction areas. Each tank will have a storage capacity of 20,000 gallons, providing a total storage capacity of 60,000 gallons at each station. At the maximum flow rate (6,900 gpm, assuming the entire flow rate is generated at one weir location), the tanks will provide approximately 8.7 minutes of storage capacity. SNWA will include and control diversion valves in their pipelines in close proximity to the handoff locations. These valves will be used by SNWA to divert groundwater (untreated) to surface water if the total dewatering flow exceeds the system design of either 5,000 or 6,900 gpm or the treatment system is shut off for maintenance. It should be noted that implementation of the preliminary treatment system design would not require the shut down of the treatment system for the replenishment of resin.

The three Baker tanks will be interconnected with an 8-inch diameter pipe manifold. Each tank will be on a concrete containment pad that will provide a maximum of 10% of the storage volume. The containment pad will be designed to contain minor leakage or spills. Each station will have three variable frequency drive (VFD) controlled horizontal end suction centrifugal pumps to pump water from the storage tanks to the central treatment plant. Each pump will be designed with a capacity to deliver 3,500 gpm. The storage tanks will be equipped with level controls which will operate the pumps. The transfer pumps will operate automatically based on the water level in the storage tanks. Each of the two operating pumps (the third pump will be a back-up) initially will be set to pump at a rate of 1,250 gpm (for a total flow of 2,500 gpm from each weir). If the flow rate from the weir to the storage tank drops below 2,500 gpm, the flowrate of one of the operating pumps will slow down in 10% increments. This will prevent the water level in the storage tank from dropping precipitously. If the influent flow rate continues to decrease after the initial pump flow rate has been reduced by 50%, the second pump will be decreased in 10% increments until the influent flow is approximately equal to the effluent flow. If the water level in the storage tanks rises above a pre-determined point, the pump flowrate will increase in 10% increments to prevent the influent level from rising too much. If the influent level continues to rise and the initial pump has reached 100% of its flowrate, the flow rate of the second pump will be increased gradually to bring the water level back to the pre-determined point.

SNWA, in a June 2016 meeting with the Trust, identified their "Best Guess" range of dewatering per weir for the Sunrise Mountain and Historic Lateral weirs would be 500 – 1250 gpm (each); however, NDEP has directed the Trust to evaluate and design to treat flow scenarios of 5,000 and 6,900 gpm. It is likely that only one transfer pump may be needed to maintain a constant water level within the three Baker tanks; at a flow rate of 2,000 gpm the three Baker tanks will be able to provide a minimum of 30 minutes of storage time.

Each pump station will require a footprint of 65 x 105 feet for the three storage tanks and the three transfer pumps. The areas will be enclosed by an 8 foot high chain-link fence with barbed wire and a 16 foot wide double-leaf access gate. Figure 8 shows the conceptual layout for the pump stations. Each pump station will have a high-density polyethylene (HDPE) liner.

Water will be transferred from each pump station to the central treatment plant via 20-inch diameter HDPE piping. The proposed piping routes are presented in Figure 5. The pipeline from the Sunrise Mountain Weir construction site to the central water treatment plant is approximately 1,000 feet in length, and the pipeline from the Historic Weir construction site to the Central Water Treatment Plant is approximately 4,200 feet in length.

Based on operational experience with Lift Station 1 and the location of system components on public lands, trespassers and vandalism are a concern. Operations will be staffed by two operators 24-hours per day, 7 days per week. The Trust's existing third party security patrols will be expanded to include the dewatering treatment system areas and is included in the estimated costs.

## 7.2 MULTI-MEDIA FILTRATION SYSTEM

Figure 9 shows a conceptual layout of the treatment plant, which includes a 60 x 60 feet staging area to be used by the ion exchange resin supplier during resin replacement operations. The total footprint for the water treatment plant will be approximately 200 x 200 feet. The treatment facility will be secured with an 8 foot high chain-link fence with barbed wire and two 16 foot wide double-leaf access gates on the west side fence and the south side fence. This EE/CA assumes that the property owner will accept the installation of a temporary fence and gates around the treatment facility.

Influent to the water treatment plant will first be treated by the multi-media filters to remove suspended solids; historical well data indicate that the water may have up to 15 ppm suspended solids. The suspended solids could potentially plug the ion exchange beds, which could cause short circuiting in the resin beds. The pumps at the pump stations will be sized appropriately to provide enough water head to force the water through the multi-media filters and the ion exchange beds.

A typical multi-media filter includes layers of anthracite, fine garnet, coarse garnet and crushed rock. The influent water will enter the system through the top of the filter vessel and flow through the media bed under pressure. Solid particles will be entrapped in the media bed until the filtration system initiates an automatic backwash to expel all particulates entrapped within the media bed. The system inlet pressure will normally range from 40 to 80 pounds per square inch gage (psig).

The preliminary design includes six 10-foot diameter multi-media filters to treat the maximum flow of 6,900 gpm, which is equivalent to approximately 15 gpm per square foot of hydraulic loading rate through the filters. Two multi-media filters will be installed on one skid and a total of three skids will be used. Each skid will be pre-piped and pre-wired complete with all piping, automatic valves, pressure switches, and controller at the vendor warehouse. Sampling ports will be provided at each multi-media filter effluent line.

The multi-media filters will be backwashed periodically to remove accumulated solids. The backwash solids will be collected in three Baker tanks equipped with mixers, each tank will have a storage capacity of 20,000 gallons. Two different treatment configurations are shown in Figures 6 and 7 to manage the suspended solids removed by the multi-media filters. Figure 6 depicts on-site solids management, which includes re-blending the backwash solids with the treated effluent. Figure 7 depicts the off-site solids management, which includes backwash solids being concentrated and dewatered using a centrifuge, with the dewatered cake transported off-site for disposal. Treated effluent will be stored in two 20,000-gallon Baker tanks, and then pumped to the Las Vegas Wash using three horizontal end-suction centrifugal pumps, each with a capacity of 3,500 gpm. These backwash solids management processes are further described in Section 7.4.

Filter backwash will be controlled by either the elapsed time of filter operation or by the pressure differential between the inlet and outlet manifolds. The operator can also manually start the backwash operation of any filter. Typical backwash flowrates will be approximately 1,200 gpm and will continue for approximately 4 minutes.

The multi-media filtration system will have an effluent manifold that allows the filtered effluent from the multi-media filters to be used as backwash feed water. Water or air pressure will open a 3-way valve causing the reverse flow of a portion of filtered water to backwash the filtration media. One tank at a time will be backwashed while continuing to process water for use until the entire system is clean. The backwash solids will be collected in three 20,000 gallon Baker tanks for further treatment, as described further in Section 7.4.

### 7.2.1 Ion Exchange Treatment System

Effluent from the multi-media filters will be treated by the SBA ion exchange resin vessels to remove perchlorate. The ion exchange vessels will use an anion exchange resin from Purolite with a category number of A532E or similar product from other qualified ion exchange resin suppliers. This is a dual amine bifunctional resin that exhibits high-selectivity for hydrophobic anions such as perchlorate. The resin polymer structure is gel polystyrene crosslinked with divinylbenzene and the functional group is bifunctional quaternary amines. This resin has been successfully used to treat contaminated water with perchlorate concentrations that range from 0.01 ppm to 10 ppm. The resin data sheet and the MSDS are provided in Appendix C.

This preliminary design includes four trains of ion exchange vessels to treat the maximum flowrate of 6,900 gpm. Each train will consist of two 12-inch diameter vessels, each holding approximately 600 cubic feet of Purolite A532E perchlorate selective resin. The two vessels in each train will work as a lead-lag configuration. When the lead column is taken out of the treatment sequence for resin replacement, the lag column is moved to the lead column position. A new resin column is placed in the lag column position. The vessels will be equipped with 4-inch diameter nozzles used to remove the spent resin slurry and also place the fresh resin slurry into the tank. The resin tanks will each have pressure drop gauges, sample ports, top manways, and pressure relief valves and each treatment train will have a flowmeter. All vessels will be pre-piped and pre-wired at the vendor warehouse.

The vessel will be backwashed after each resin replacement to optimize the resin distribution. The treated effluent will be used for this resin redistribution. Sample ports will be provided on each ion exchange vessel and

effluent line to allow effluent monitoring of the perchlorate concentration and resin depletion condition. Flowmeters will be installed after each train to provide totalized flow and flowrate of the treated water discharged from each train.

The system is designed to treat a flowrate of 6,900 gpm that contains 1.8 ppm perchlorate, 1,700 ppm sulfate, and 4,150 ppm TDS. Under these conditions, the four lead resin beds are expected to last approximately 36 days. The treatment capacity of the resin is impacted by the perchlorate concentration, as well as by the concentrations of sulfate and TDS in the water. The resin is expected to last longer if any of these concentrations are lower than the design parameters listed above. Alternatively, the resin may have to be replaced sooner if the perchlorate, sulfate, or TDS concentrations are higher. The resin loading capacity is dependent on mass loadings of the contaminants and water flow rate is a key parameter used to determine contaminant mass loading. At a total average water flow rate of 5,000 gpm (directed by NDEP), the four leading resin beds are expected to last 69 days, while at a total average flow rate of 1,500 gpm (within the range of SNWA's "Best Guess"), the four leading resin beds are expected to last for 230 days.

The system will be capable of treating perchlorate concentrations higher than the maximum anticipated concentration of 1.8 ppm. The impact of higher perchlorate concentrations in influent water to the treatment system would be a higher resin replacement rate, which would result in higher operating costs. The SBA resin cannot be regenerated; spent resin must be transported off-site and disposed at a landfill or incinerated at a special facility by the resin supplier. Tetra Tech has assumed that the spent resin will be incinerated for costing purposes.

## 7.3 TREATED EFFLUENT DISCHARGE SYSTEM

Effluent from the ion exchange vessels will be stored in two storage tanks, each with a 20,000-gallon capacity, and then pumped to the Las Vegas Wash in above ground pipelines, as shown in Figure 5. Three horizontal end suction centrifugal pumps (one pump will be present as a back-up) will be used to pump the treated water to the discharge point. Each pump will have a capacity of 3,500 gpm.

An ultrasonic level sensor will be used to continuously measure the water level in the storage tanks. The sensor will be capable of identifying the following conditions:

- High alarm: the tank water level is too high and the effluent discharge pumps are not in normal operation.
- Low-low level: interlock to shutdown of the effluent discharge pumps to prevent running the pumps dry.
- Low level: Permissive to allow the operation of one effluent discharge pump.
- Lag level: Permissive to allow the operation of the second effluent discharge pump.

The discharge pumps will be controlled by the water level within the effluent storage tanks and the control level can be adjusted by the operator through the local control panel.

A 20-inch diameter HDPE pipe will deliver the treated water from the storage tanks to the Las Vegas Wash. The effluent pipe route is shown in Figure 5. One clamp-type ultrasonic flowmeter will be installed on the 20-inch diameter pipeline to record the instantaneous and totalized flow of the treated water.

## 7.4 MULTI-MEDIA FILTER BACKWASH MANAGEMENT

Two alternatives are identified to manage the solids from backwashing the multi-media filters. The on-site solids management alternative stores the backwash solids in tanks and blends it into the treated effluent prior to the effluent being discharged to the Las Vegas Wash. This alternative is simple, effective, and relatively lower in cost since solids are managed on-site. In this solids management alternative, the multi-media filter will first be flushed with treated effluent water to rinse perchlorate contaminated water from the filter bed before the filter is backwashed. This procedure should effectively prevent contaminated backwashed solids from cross-contaminating the treated effluent, due to the high solubility of perchlorate. Accordingly, when a pressure drop in

a given multi-media filter indicates that it is time to backwash, the influent valve to the filter will be closed, another valve connected to the treated effluent will be opened to allow treated effluent to flush the filter bed for approximately two bed volumes and then the backwash process will be performed. This procedure ensures that when the backwash is blended with the treated effluent there will be no perchlorate contamination of the treated effluent from the backwash stream.

The off-site solids management alternative stores the backwash solids in tanks, uses a lamella clarifier to concentrate the solids, uses a centrifuge to dewater the solids into a cake, and transports the cake off-site for disposal. The dewatered cake is expected to contain approximately 50 to 70% moisture; this moisture will contain perchlorate equivalent in concentration to the average perchlorate in the water generated at the weirs (less than 2 ppm). Past experience with characterization of contaminated sediments that have been disposed of in landfills indicates that solid cake containing less than 1% (10,000 ppm) perchlorate will be considered to be non-hazardous and may be landfilled as a non-hazardous waste.

### 7.4.1 On-Site Solids Management

The on-site solids management alternative includes mixing the backwash solids with the treated effluent and discharging the combined stream to the Las Vegas Wash. The assumed maximum allowable solids concentration discharged to the Las Vegas Wash is 135 ppm, consistent with the Trust's current NPDES Permit. Water generated from the weir dewatering operations is expected to have solids concentration of less than 15 ppm. It is expected that the combined stream of the backwash solids and the treated effluent will contain approximately 15 ppm suspended solids, which is much lower than the NPDES permit limit of 135 ppm.

### 7.4.2 Off-Site Solids Management

The off-site solids management alternative includes storing the backwash solids in tanks, using a clarification system to settle solids, using a centrifuge to dewater the sludge, and transporting the sludge cake off-site to a non-hazardous landfill. The proposed sludge treatment process will include a solid-liquid separator with mixing and coagulation chambers, a polymer injection system, and a rental centrifuge for sludge dewatering system.

The maximum backwash solids volume will be approximately 59 gpm; the solid-liquid separator will have a hydraulic capacity of 100 gpm. Two sludge feed pumps, each with a capacity of 60 gpm, will be used to pump backwash solids to the solid-liquid separator. Filter backwash solids will be stored in three 20,000-gallon Baker mixer tanks which will be interconnected with an 8-inch diameter pipe manifold.

An ultrasonic level sensor will provide a continuous measurement of the liquid level in the backwash solids holding tank and provide the following notifications:

1. High alarm: the tank water level is too high and the sludge feed pump/sludge treatment system is not in normal operation.
2. Low-low level: interlock to shutdown of the sludge feed discharge pumps to prevent running the pumps dry.
3. Low level: Permissive to allow the operation of one effluent discharge pump.

Sludge from the solid-liquid separator will be pumped to the centrifuge using two centrifuge feed pumps. The centrifuge system will include the sludge feed pump, the centrifuge, a polymer injection system, and all interconnected piping and controls, and will be a rental unit.

The centrifuge system will have a treatment capacity of approximately 50 gpm; the estimated volume of sludge from the solid-liquid separator is less than 14,000 gpd (or 10 gpm). The centrifuge system will be operated a few hours a day and will be manually started and stopped by the operator.

Supernatant from the solid-liquid separator and centrate from the centrifuge system will be sent to the influent holding tanks, mixed with the influent water coming from the weirs and sent through the treatment system for perchlorate removal.

Sludge cake from the centrifuge system will be stored in a roll-off bin, and then transported off-site for disposal in a landfill. The water remaining in the filter cake will contain perchlorate concentrations equivalent to concentrations in the water from the weir dewatering operations. This concentration; however, is low enough that the sludge cake will be considered non-hazardous.

## 7.5 PRELIMINARY CAPITAL AND OPERATING COST ESTIMATES

The SBA ion exchange resin is recommended to treat water that will be generated from the weir construction dewatering operations. Two treatment scenarios for the SBA ion resin exchange treatment have been presented; the only difference between the scenarios is the management of the backwash solids generated from the multi-media filters. Alternative 1 manages the backwash solids on-site and re-blends it with treated effluent. Alternative 2 manages the backwash solids off-site. The capital and operating costs for Alternative 2 will be higher than those for Alternative 1. Capital and operating costs were also estimated for hydraulic and mass loads that correspond to the flow rates as directed by NDEP. The hydraulic and mass load calculated based on a flow rate of 6,900 gpm combined from the two weirs results in perchlorate, sulfate, and TDS concentrations of 1.8 ppm, 1,700 ppm, and 4,150 ppm, respectively. The hydraulic and mass load calculated based on a flow rate of 5,000 gpm results in perchlorate, sulfate, and TDS concentrations of 1.3 ppm, 1,175 ppm, and 3,050 ppm, respectively. The capital and operating cost estimates are higher for the 6,900 gpm hydraulic and mass load scenario, compared to the 5,000 gpm hydraulic and mass load scenarios.

### 7.5.1 Preliminary Capital Cost Estimate

Detailed preliminary capital cost estimates for SBA ion exchange treatment plant with on-site solids management and with off-site solids management are provided in Appendix B. These conservative cost estimates were developed based on the materials needed and the construction elements associated with implementing the alternative. These costs do not necessarily represent the cost that may actually be incurred during construction because many design details are preliminary at this stage of analysis.

The cost estimates were developed from both deterministic and stochastic approaches. Select direct costs were developed based on estimated quantities and unit costs, while other costs were included as percentages of the direct costs estimated deterministically. Unit costs were developed by analyzing data available from nationally published cost estimating guides. Cost data principally incorporate past engineering experience, including actual operating costs and unit costs that have been realized during similar reclamation projects. Unit costs for construction, often referred to as hard costs, are based on assessments of construction techniques, equipment, Site accessibility, material handling distances and methods as well as Site conditions. A construction contingency is added to the subtotal of all the construction costs. Soft costs which include construction administration, surveying and engineering costs are valued at a percentage of the total construction costs estimate.

The total estimated cost is expected to be within plus 50% and minus 30% of actual costs, commensurate with the conceptual level of design available at this level of evaluation consistent with a Class 5 cost estimate for screening and feasibility purposes as defined in American Society of Testing and Materials (ASTM) Standard E2516-11.

The preliminary capital cost estimate is the same for both NDEP-directed scenarios (i.e. 5,000 gpm and 6,900 gpm) as the equipment required to treat the water is the same, irrespective of the difference in flow rates. The operating costs change for these two scenarios since the resin is spent more rapidly at the hydraulic and mass loads for the 6,900 gpm flow rate compared to the average hydraulic and mass load conditions for the 5,000 gpm flow rate. The capital cost is estimated for two treatment scenarios.

The first treatment scenario assumes that suspended solids are removed using multi-media filters, stored in tanks and re-blended with the treated effluent (on-site solids management). The capital cost for this option is estimated at $10.88M. The second scenario assumes the suspended solids are removed using multi-media filters, stored in tanks, and are thickened in a clarifier and dewatered using a centrifuge (off-site solids management). The capital cost for this scenario is estimated at $11.1M. The estimates include all equipment, Site work, mechanical, electrical, civil, structural, instrumentation/control, engineering, start up, tax, and shipping charges. The estimates also include the first batch of ion exchange resin that will be loaded into the tanks. A 30% contingency is added to the overall cost.

### 7.5.2 Preliminary Operating Cost Estimate

Detailed breakdown of the operating cost estimates for various treatment options are provided in Appendix B. The operating cost estimate for each treatment scenario was estimated on a monthly basis. In estimating the operating cost it was assumed that the weir dewatering treatment system will be in operation for 12 months. SNWA advised the Trust that construction of the two weirs would likely take between 4 to 16 months to complete; therefore, the Trust selected a 12 month operation for estimating purposes. The following cost elements are included in estimating the monthly operational cost:

- Resin replacement cost;
- Resin disposal cost;
- Power cost;
- Operational staff cost;
- Chemical cost;
- Sludge disposal cost (where applicable):
- System water quality monitoring cost;
- Rental equipment cost; and
- NPDES compliance reporting.

The operating cost for the treatment alternative where the suspended solids are removed, stored and re-blended with treated effluent (on-site solids management) is estimated under hydraulic and mass loads associated with flow rates of 6,900 gpm and 5,000 gpm. Under the hydraulic and mass loads for 6,900 gpm, the operating cost is estimated at $1.01M for the first month and increases linearly to $11.3M inclusive through month 12. The linear cost increase assumes the hydraulic and mass loads remain constant over the 12 month period, resulting in a linear rate of resin usage. The operating costs for the first and last month also include mobilization and demobilization costs. The corresponding operating costs under the hydraulic and mass loads for 5,000 gpm are $0.68M and $7.4M, respectively.

The operating cost for the treatment alternative where the suspended solids are removed, stored, thickened, dewatered, and transported off site for disposal (off-site solids management) is also estimated under the hydraulic and mass loads associated with flow rates of 6,900 gpm and 5,000 gpm. Under the hydraulic and mass loads for 6,900 gpm, the operating cost is estimated at $1.07M for the first month and increases linearly to $12M inclusive through month 12. The corresponding operating costs under the hydraulic and mass loads for 5,000 gpm are $0.74M and $8.04M respectively.

The on-site solids management scenario of the SBA ion exchange resin treatment is more cost-effective than the off-site solids management scenario, as long as the solids concentration in the effluent meet the assumed maximum allowable solids concentration discharged to the Las Vegas Wash (135 ppm), consistent with the Trust's current NPDES Permit. Accordingly, the on-site solids management for the SBA ion exchange resin treatment and is the RAA for the treatment of perchlorate-contaminated groundwater extracted during weir construction dewatering operations.

# 8.0 REFERENCES

AECOM. (2016). *Preliminary Draft Groundwater Sampling Technical Memorandum, NERT Remedial Investigation Downgradient Study Area, Nevada Environmental Response Trust Site, Henderson, Nevada.*

ENSR. (2005). *Conceptual Site Model, Kerr-McGee Facility, Henderson, Nevada.*

ENVIRON. (2014). *Remedial Investigation and Feasibility Study Work Plan, Revision 2, Nevada Environmental Response Trust Site, Henderson, Nevada.*

National Research Council. (2005). *Report in Brief: Health Implications of Perchlorate Ingestion*

Plume, R.W., 1989. *Ground-Water Conditions in Las Vegas Valley, Clark County, Nevada Part 1, Hydrogeologic Framework*, U.S. Geological Survey Water-Supply Paper 2320-A.

Ramboll Environ Inc., 2015. *Annual Remedial Performance Report for Chromium and Perchlorate, Nevada Environmental Response Trust Site, Henderson, Nevada.*

Tetra Tech, Inc. (2015a). *Continuous Optimization Program Infrastructure Audit and Data Accessibility Report, Nevada Environmental Response Trust, Henderson, Nevada.*

United States Department of the Interior, Fish and Wildlife Service. (2009). *Reinitiation of Consultation and Biological Opinion 84320-2009-F-0165 for Weir Construction Activities within the Clark County Wetlands Park memorandum, Clark County, Nevada.*

United States Environmental Protection Agency. (2002). *Toxicological Review and Risk Characterization (External Review Draft).* NCEA-1-0503

United States Environmental Protection Agency. (1993). *Guidance on Conducting Non-Time-Critical Removal Actions Under CERCLA. EPA540-R-93-057.*



ED_002461_00004015-00048

# Tables

**TABLE 1**

**Water Quality Characteristics**

| Parameter | WMW6.55S [1] (Close to proposed Sunrise Mountain weir) | | | WMW5.58S [1] (Close to proposed Historic Lateral weir) | | |
|---|---|---|---|---|---|---|
| | Concentration (mg/L) | | | Concentration (mg/L) | | |
| | Jan-15 | Feb-16 | Average | Jan-15 | Feb-16 | Average |
| Nitrate-NO3 | 23 | N/A | 23 | 36 | N/A | 36 |
| Perchlorate | 1.7 | 1.9 | 1.8 | 1 | 0.73 | 0.865 |
| Sulfate | 1,800 | 1,600 | 1,700 | 720 | 580 | 650 |
| Chlorate | 0.39 | 0.47 | 0.43 | N/A | N/A | N/A |
| Chloride | 670 | 580 | 625 | 400 | 320 | 360 |
| Magnesium | 134.5 | N/A | 134.5 | 85 | N/A | 85 |
| Potassium | 37 | N/A | 37 | 29 | N/A | 29 |
| Sodium | 640 | N/A | 640 | 380 | N/A | 380 |
| Calcium | 420 | N/A | 420 | N/A | N/A | N/A |
| Nitrate/ as N | 5.2 | N/A | 5.2 | 8.2 | N/A | 8.2 |
| Total Dissolved Solids (TDS) | 4,200 | 4,100 | 4,150 | 2100 | 1,800 | 1,950 |
| Total Suspended Solids (TSS) | N/A | 14 | 14 | N/A | 9.9 | 9.9 |
| Total Alkalinity | 160 | N/A | 160 | 170 | N/A | 170 |

[1] Wells WMW6.55S and WMW5.58S are shown on Figure 3

**TABLE 2**

**Historic Dewatering at Weirs along Las Vegas Wash**

| Weir Structure | Groundwater Pumping timeframe | | Flow (gpm) | | | Days with zero flow rate |
|---|---|---|---|---|---|---|
| | Begin | End | Non-zero Minimum[1] | Average | Maximum | |
| DU Wetlands No. 1 | Mar-12 | Jun-12 | 193 | 281 | 484 | 0 |
| Silver Bowl | May-14 | Nov-14 | 9 | 630 | 1451 | 11 |
| Archery | May-14 | Nov-14 | 38 | 809 | 1510 | 5 |
| Duck Creek Confluence | Mar-12 | Dec-12 | 36 | 750 | 1355 | 0 |
| Upper Narrows | Jun-12 | Nov-12 | 97 | 1669 | 2453 | 0 |
| Calico Ridge | Oct-04 | Dec-04 | N/A[2] | 320 | 386 | N/A[2] |
| Lower Narrows | Jan-11 | May-11 | 39 | 707 | 1808 | 3 |
| Homestead | Jan-11 | May-11 | 4 | 855 | 1501 | 12 |
| 3 Kids | Feb-14 | Apr-15 | 348 | 1174 | 7077 | 25 |
| Powerline | Apr-06 | Sep-06 | 769 | 1294 | 1572 | N/A[2] |

Data included in this Table was provided to the Trust by SNWA

[1] Non-zero minimum is the lowest flow achieved on days when pumping was actively performed.

[2] The number of days with zero flow could not be determined for the Calico Ridge or Powerline weirs because flow was measured monthly at Calico Ridge weir and flow was measured weekly at the Powerline weir.

**TABLE 3**

**Alternatives for Detailed Evaluation**

| Option ID | Description | Discussion | Retained for Final Alternative Analysis |
|---|---|---|---|
| 1 - Biological Treatment Plant | Biological Treatment Plant & associated water conveyance - South Side of Las Vegas Wash near Lift Station #1 | Bacterial cultures anoxically degrade perchlorate to chloride, water and carbon dioxide. The single biological treatment plant on the south side of the wash presents best combination of access, proximity to power supply, and avoidance of sensitive species areas | Yes |
| 2 - SBA Ion Exchange Treatment Plant | SBA Ion Exchange Treatment Plant & associated water conveyance - South Side of Las Vegas Wash near Lift Station #1 | SBA resins have high selectivity for the perchlorate ion, water pretreatment to remove suspended solids is likely, and spent resin will be disposed off-site. The single SBA ion exchange treatment plant on the south side of the wash presents best combination of access, proximity to power supply, and avoidance of sensitive species areas | Yes |

**TABLE 4**

**Comparison of Alternatives**

| Alternative | Alternative 1 – Biological Treatment | Alternative 2 – SBA Ion Exchange Treatment |
|---|---|---|
| Description | Biological Treatment Plant & associated water conveyance - South Side of Las Vegas Wash near Lift Station #1 | SBA Ion Exchange Treatment Plant & associated water conveyance - South Side of Las Vegas Wash near Lift Station #1 |
| Effectiveness | While biological treatment is a successfully commercialized technology for remediating perchlorate at concentrations ranging from 50 ppb to over 5,000 ppm, the anticipated variability in the weir dewatering flow rates (0 to 6,900 gpm) render this treatment ineffective for perchlorate-contaminated water from weir dewatering since the bacteria in the reactors cannot survive extended periods of no-flow conditions. | SBA ion exchange is a successfully commercialized technology for remediating perchlorate at concentrations ranging from 50 ppb to 500 ppm. Pre-treatment of the water generated by weir dewatering operations to remove suspended solids may be required. |
| Implementability | Full-scale biological treatment systems have been constructed at other locations. Access will need to be negotiated for the treatment plant and the pumping stations/conveyance system. The 10 million gallon equalization tank will take more than 1 year to construct, which makes this treatment alternative infeasible for the weir dewatering implementation schedule. | Full-scale SBA ion exchange treatment systems have been constructed at other locations. Access will need to be negotiated for the treatment plant and the pumping stations/conveyance system. |
| Cost Range | The capital costs are approximately $27.7M and operating costs for 12 months of dewatering treatment range from approximately $3.69M to $4.1M for 5,000 gpm and 6,900 gpm, respectively. These costs are for simultaneous construction of the two weirs, anticipated to be completed within 12 months. | The capital costs for the on-site solids management are approximately $10.88M and the operating costs for 12 months of dewatering treatment range from approximately $7.4 to $11.3M, for 5,000 gpm and 6,900 gpm flowrates, respectively. These costs are for simultaneous construction of the two weirs, anticipated to be completed within 12 months. |

# Figures

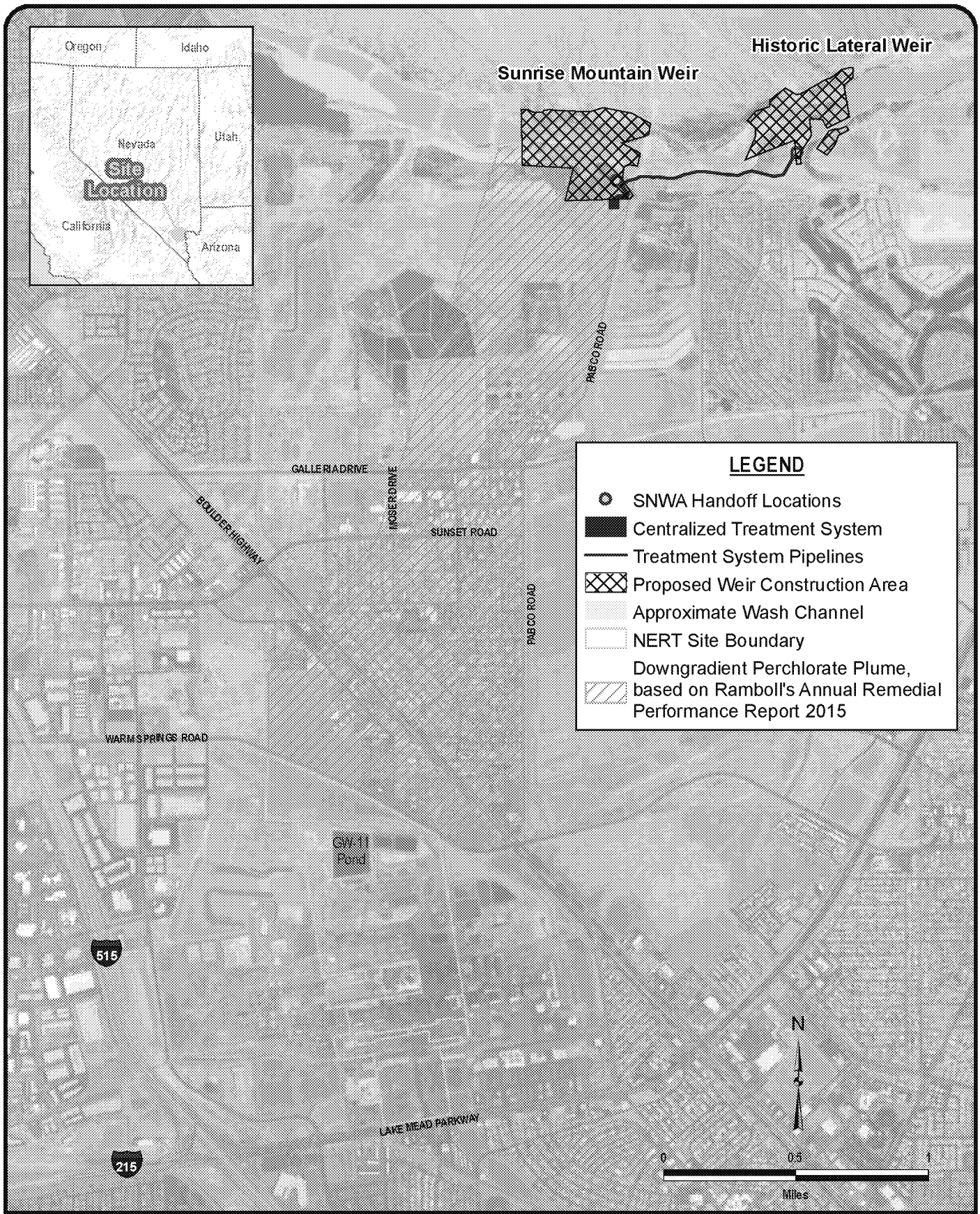


PATH: \\ECSS134FS01\BOU-GIS\ARCPRJ2\NERT\MXD\JASON_WORKING_FILES\LAS VEGAS WASH\WEIR_WATER_EECA_OVERVIEW3.MXD

TETRA TECH
www.tetratech.com

1489 West Warm Springs Road, Suite 110
Henderson, Nevada 89014
Phone: (702) 966-8340

NEVADA ENVIRONMENTAL RESPONSE TRUST

**LAS VEGAS WEIR LOCATIONS**
**OVERVIEW SITE MAP**

| | |
|---|---|
| Project No.: | 117-7502016 |
| Date: | AUGUST 2016 |
| Designed By: | JWR |
| Figure No. | 1 |

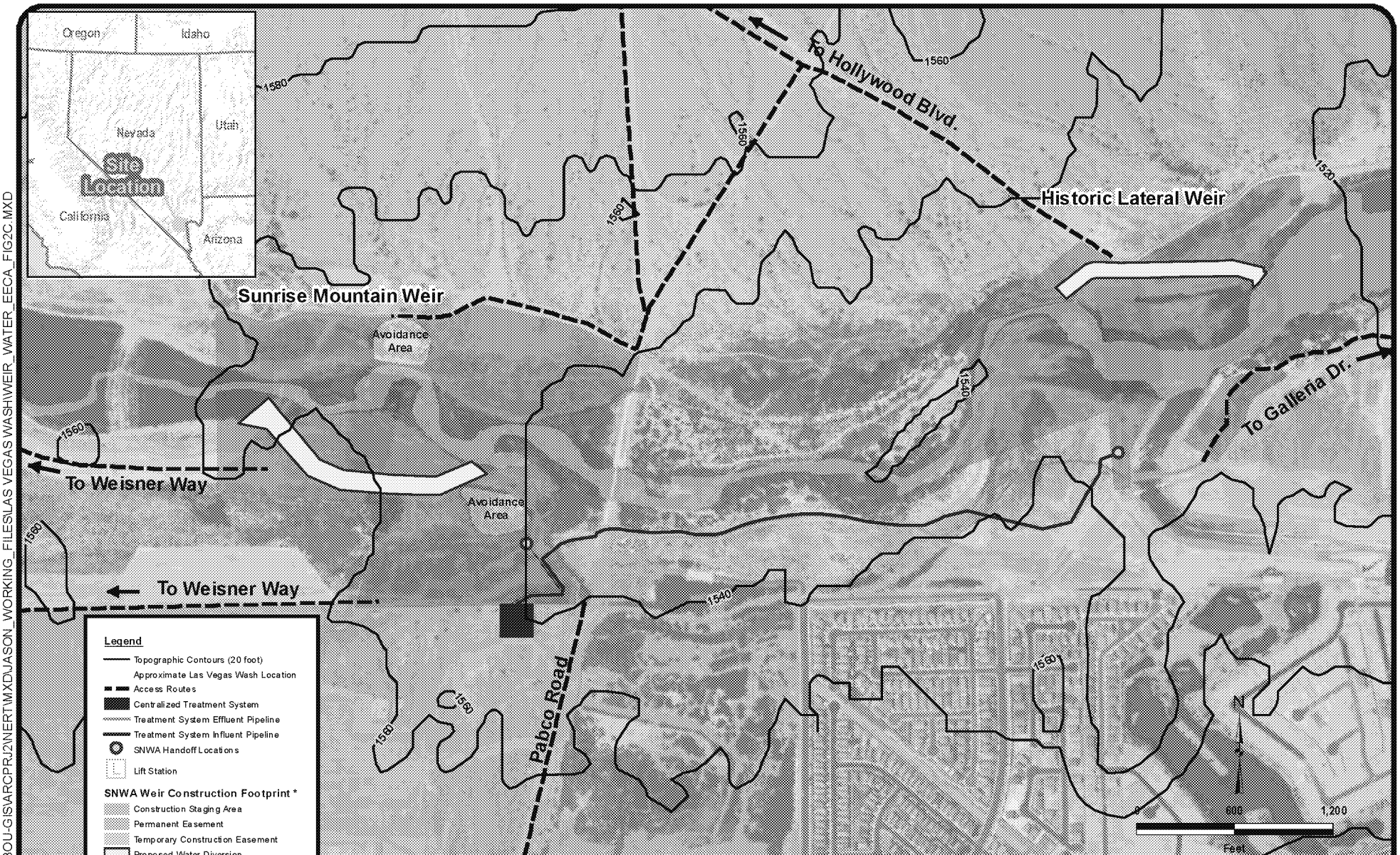


* Based on information provided by SNWA to NERT during June 16, 2016 meeting.

Access routes, both water diversions, and the Historic Lateral weir construction footprint were estimated from documents provided by the Southern Nevada Water Authority and should only be used for reference purposes.

TETRA TECH

www.tetratech.com

1489 West Warm Springs Road, Suite 110
Henderson, Nevada 89014
PHONE: (702) 966-8340

NEVADA ENVIRONMENTAL RESPONSE TRUST

HENDERSON, NEVADA

# LAS VEGAS WASH WEIR LOCATIONS SITE LOCATION MAP

| | |
|---|---|
| Project No.: | 117-7502016 |
| Date: | AUGUST 2016 |
| Designed By: | JWR |
| Figure No. | 2 |

PATH: \\ECSS134FS01\BOU-GIS\ARCPRJ2\NERT\MXD\JASON_WORKING_FILES\LAS VEGAS WASH\WEIR_WATER_EECA_FIG2C.MXD

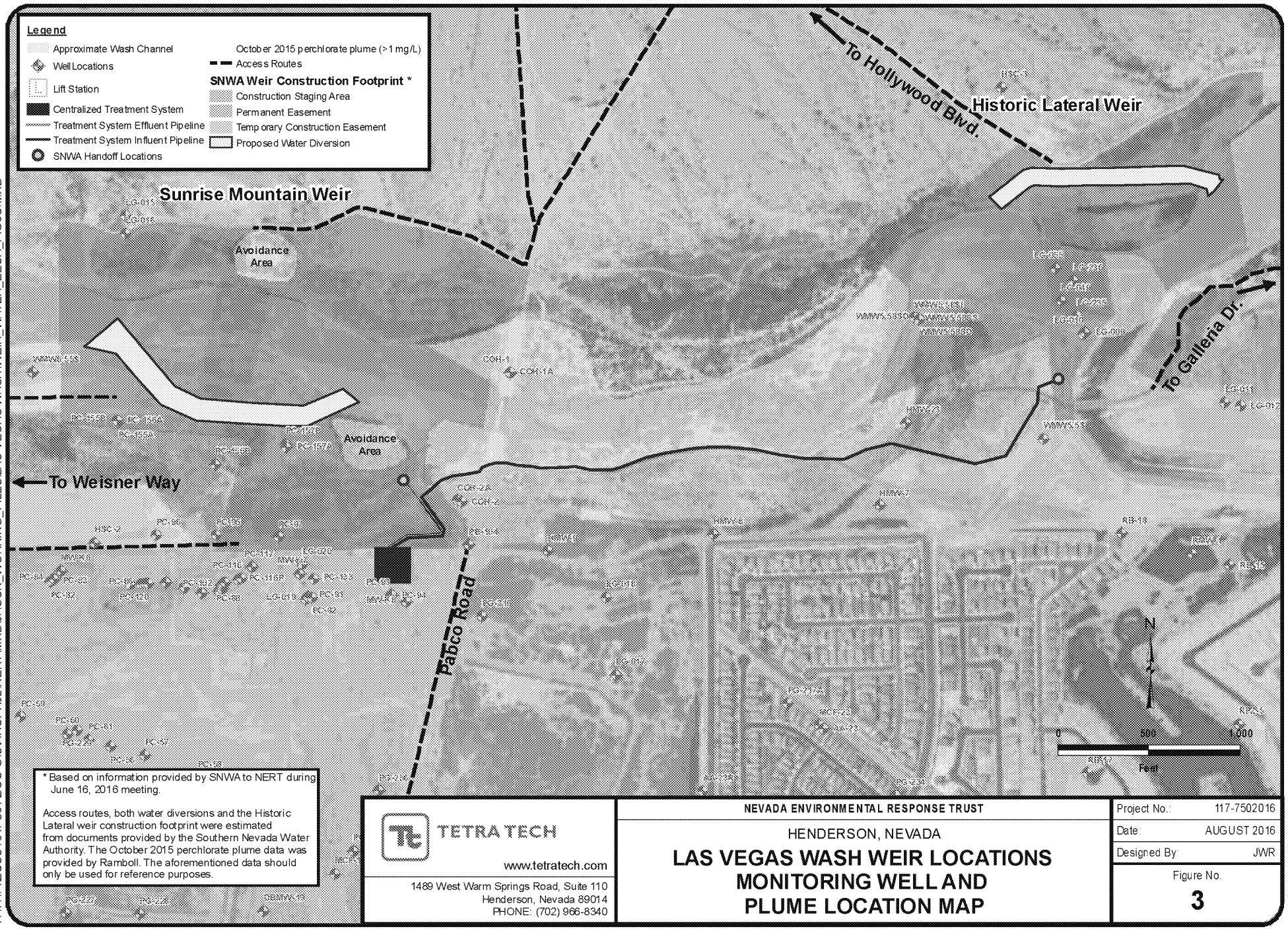


* Based on information provided by SNWA to NERT during June 16, 2016 meeting.

Access routes, both water diversions and the Historic Lateral weir construction footprint were estimated from documents provided by the Southern Nevada Water Authority. The October 2015 perchlorate plume data was provided by Ramboll. The aforementioned data should only be used for reference purposes.

TETRA TECH

www.tetratech.com

1489 West Warm Springs Road, Suite 110
Henderson, Nevada 89014
PHONE: (702) 966-8340

NEVADA ENVIRONMENTAL RESPONSE TRUST

HENDERSON, NEVADA

# LAS VEGAS WASH WEIR LOCATIONS MONITORING WELL AND PLUME LOCATION MAP

| | |
|---|---|
| Project No.: | 117-7502016 |
| Date: | AUGUST 2016 |
| Designed By: | JWR |
| Figure No. | 3 |

PATH: \\ECSS134FS01\BOU-GIS\ARCPRJ2\NERT\MXD\JASON_WORKING_FILES\LAS VEGAS WASH\WEIR_WATER_EECA_FIG3C.MXD

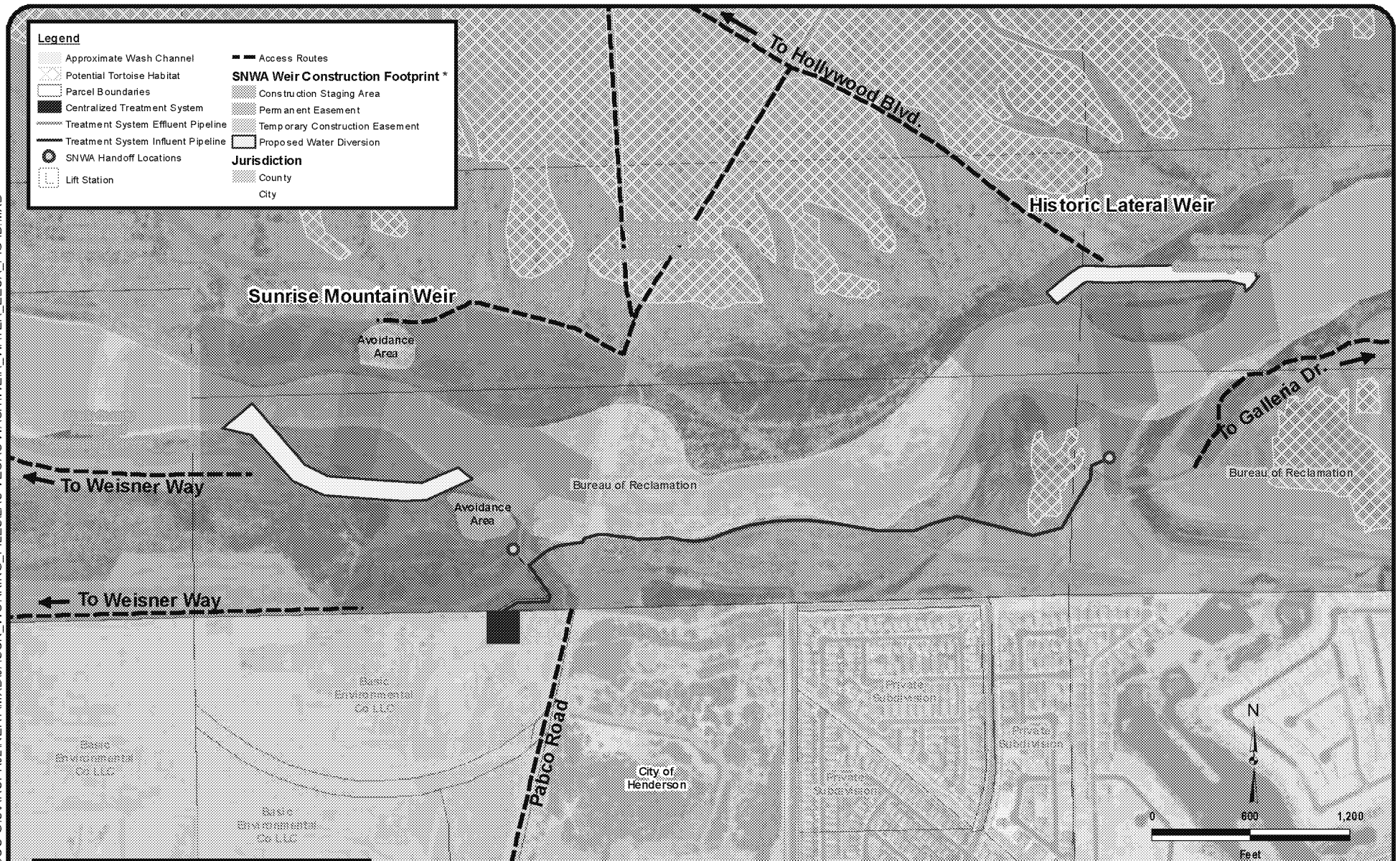


*Based on information provided by SNWA to NERT during June 16, 2016 meeting.

Potential tortoise habitat, access routes, ownership parcels, both water diversions and the Historic Lateral weir construction footprint were estimated from documents provided by the Southern Nevada Water Authority and should only be used for reference purposes.

TETRA TECH

www.tetratech.com

1489 West Warm Springs Road, Suite 110
Henderson, Nevada 89014
PHONE: (702) 966-8340

NEVADA ENVIRONMENTAL RESPONSE TRUST

HENDERSON, NEVADA

# LAS VEGAS WASH WEIR LOCATIONS LAND OWNERSHIP AND PERMITTING JURISDICTION

| | |
|---|---|
| Project No.: | 117-7502016 |
| Date: | AUGUST 2016 |
| Designed By: | JWR |

Figure No.
4

PATH: \\ECSS134FS01\BOU-GIS\ARCPRJ2\NERT\MXD\JASON_WORKING_FILES\LAS VEGAS WASH\WEIR_WATER_EECA_FIG4B.MXD

* Based on information provided by SNWA to NERT during June 16, 2016 meeting.

Potential tortoise habitat, access routes, ownership parcels, both water diversions and the Historic Lateral weir construction footprint were estimated from documents provided by the Southern Nevada Water Authority and should only be used for reference purposes.

TETRA TECH

www.tetratech.com

1489 West Warm Springs Road, Suite 110
Henderson, Nevada 89014
PHONE: (702) 966-8340

NEVADA ENVIRONMENTAL RESPONSE TRUST

HENDERSON, NEVADA

**LAS VEGAS WASH WEIR LOCATIONS CONCEPTUAL TREATMENT FACILITY LOCATION AND CONVEYANCE**

| | |
|---|---|
| Project No.: | 117-7502016 |
| Date: | AUGUST 2016 |
| Designed By: | JWR |
| Figure No. | 5 |

PATH: \\ECSS134FS01\BOU-GIS\ARCPRJ2\NERT\MXD\JASON_WORKING_FILES\LAS VEGAS WASH\WEIR_WATER_EECA_FIG5B.MXD

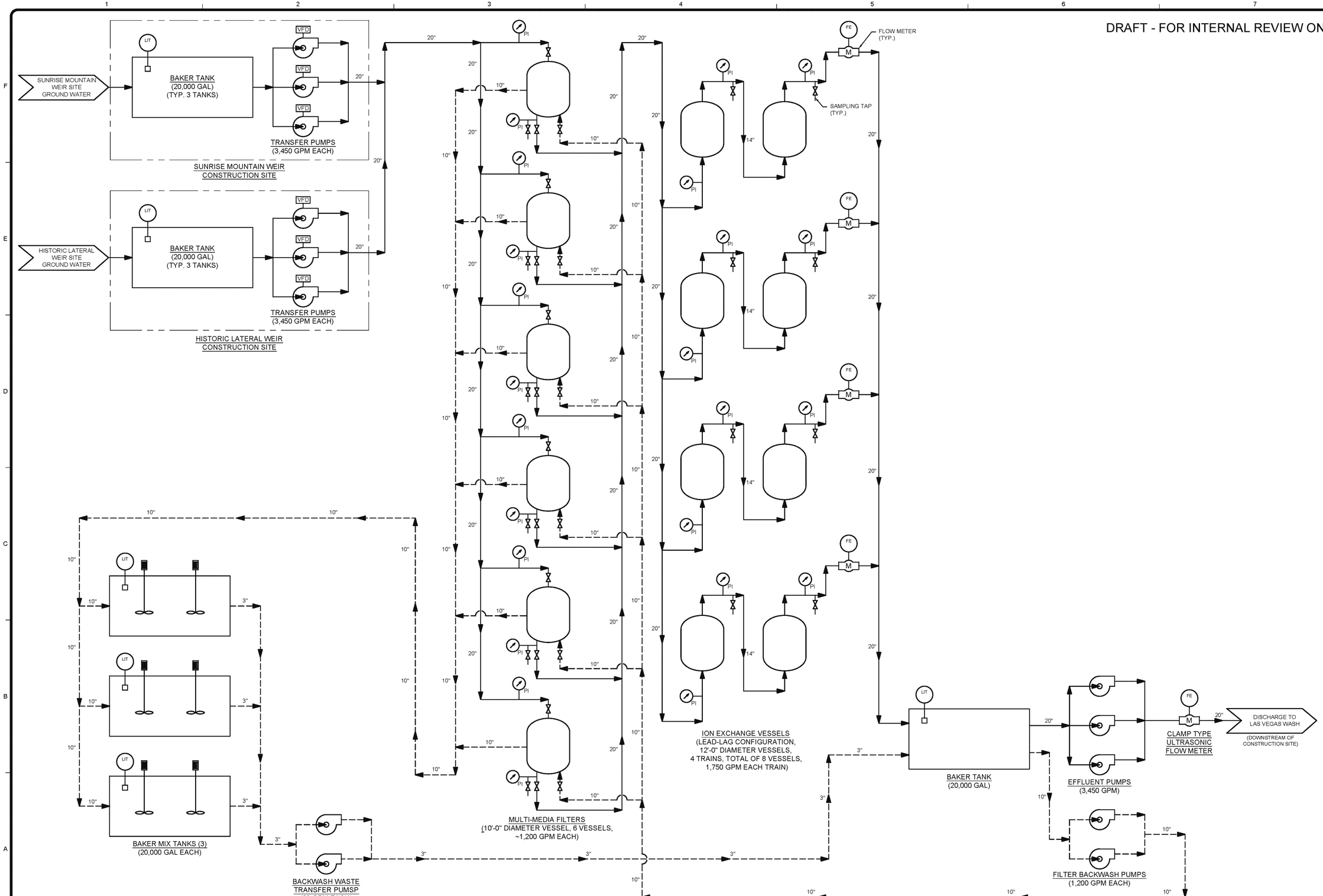


TETRA TECH

www.tetratech.com
1489 West Warm Springs Road, Suite 110
Henderson, NV 89014
Phone: 702.948.6700 Fax: 702.997.7140

| MARK | DATE | DESCRIPTION | BY |
|---|---|---|---|

NEVADA ENVIRONMENTAL RESPONSE TRUST
HENDERSON, NEVADA

ENGINEERING EVALUATION/COST ANALYSIS
DEWATERING WATER TREATMENT

# ION EXCHANGE TREATMENT UNIT WITHOUT SOLIDS TREATMENT

| | |
|---|---|
| Project No.: | 200-01299-16006 |
| Designed By: | W. XU |
| Drawn By: | S. ULREY |
| Checked By: | W. XU |

Fig 6

Copyright: Tetra Tech

7/27/2016 2:33:31 PM - P:\IER\01299\200-01299-16006\CAD\SHEETFILES\D-001 - OPTION 1_RAK.DWG - KUCHIBHOTLA, RAM

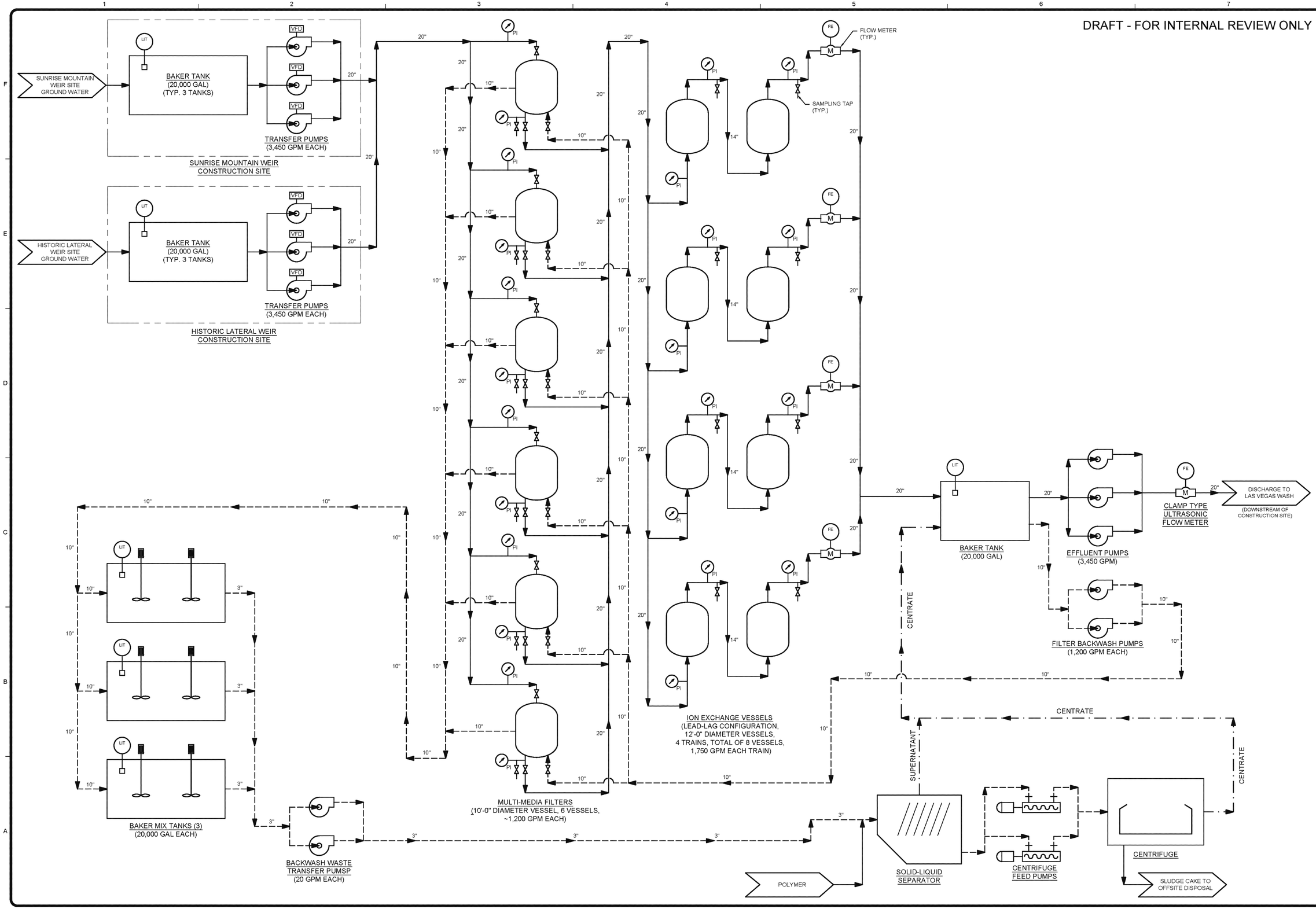


TETRA TECH

www.tetratech.com
1489 West Warm Springs Road, Suite 110
Henderson, NV 89014
Phone: 702.948.6700 Fax: 702.997.7140

| MARK | DATE | DESCRIPTION | BY |
|---|---|---|---|

NEVADA ENVIRONMENTAL RESPONSE TRUST
HENDERSON, NEVADA

ENGINEERING EVALUATION/COST ANALYSIS
DEWATERING WATER TREATMENT

# ION EXCHANGE TREATMENT UNIT WITH ONSITE SOLIDS TREATMENT

| | |
|---|---|
| Project No.: | 200-01299-16006 |
| Designed By: | W. XU |
| Drawn By: | S. ULREY |
| Checked By: | W. XU |

Fig 7

Copyright: Tetra Tech

7/27/2016 2:36:49 PM - P:\IER\01299\200-01299-16006\CAD\SHEETFILES\D-002 - OPTION 2_RAK.DWG - KUCHIBHOTLA, RAM

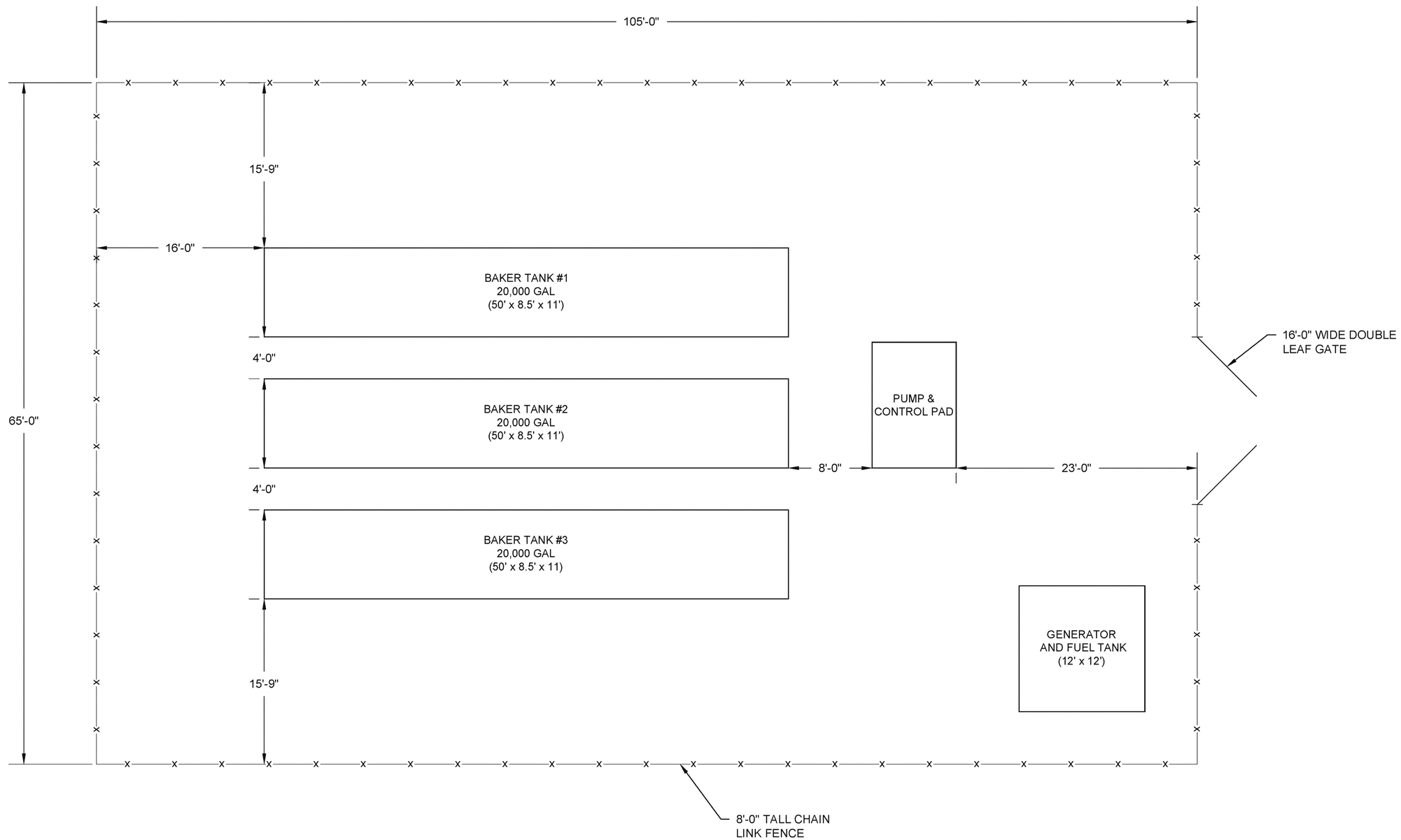


WEIR CONSTRUCTION SITE
TANKS AND PUMP STATION

SCALE: 1" = 5'-0"

(TYPICAL AT BOTH WEIR CONSTRUCTION SITES)

0 2'-6" 5'-0" 10'-0"
SCALE: 1" = 5'-0"

DRAFT - FOR INTERNAL REVIEW ONLY

TETRA TECH
www.tetratech.com
1489 West Warm Springs Road, Suite 110
Henderson, NV 89014
Phone: 702.946.6700 Fax: 702.997.7140

| MARK | DATE | DESCRIPTION | BY |
|---|---|---|---|

NEVADA ENVIRONMENTAL RESPONSE TRUST
HENDERSON, NEVADA

ENGINEERING EVALUATION/COST ANALYSIS
DEWATERING WATER TREATMENT

WEIR CONSTRUCTION SITE
TANKS AND PUMP STATION
GENERAL ARRANGEMENT

| | |
|---|---|
| Project No.: | 200-01299-16006 |
| Designed By: | W. XU |
| Drawn By: | S. ULREY |
| Checked By: | W. XU |

Fig 8

Copyright: Tetra Tech

8/8/2016 11:31:17 AM - \\TTS171FS1\IER\PROJECTS\IER\01299\200-01299-16006\CAD\SHEETFILES\D-101 - FIG. 8 - WEIR SITE GA.DWG - ULREY, SCOTT

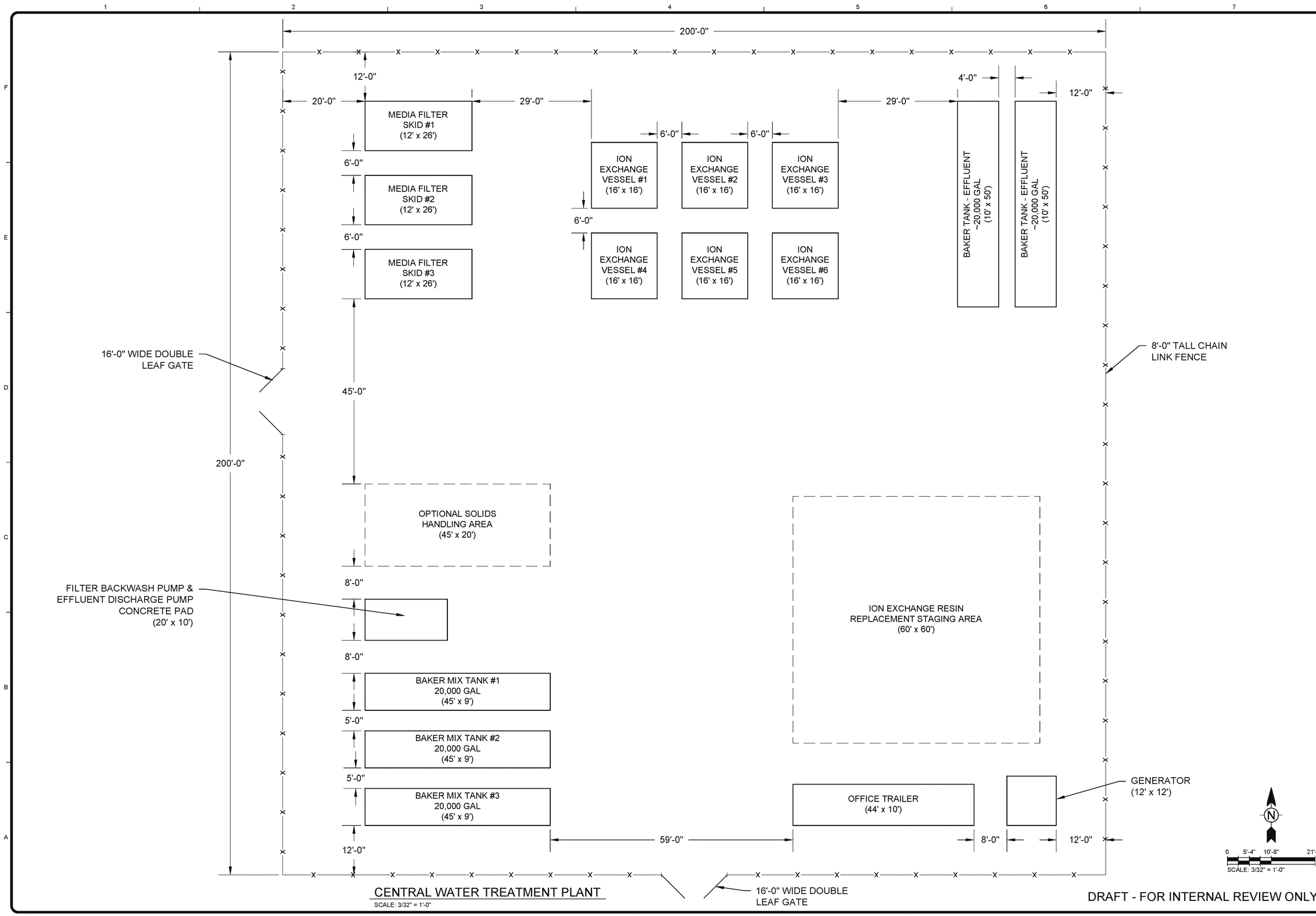


TETRA TECH

www.tetratech.com
1489 West Warm Springs Road, Suite 110
Henderson, NV 89014
Phone: 702.948.6700 Fax: 702.997.7140

| MARK | DATE | DESCRIPTION | BY |
|---|---|---|---|

NEVADA ENVIRONMENTAL RESPONSE TRUST
HENDERSON, NEVADA

ENGINEERING EVALUATION/COST ANALYSIS
DEWATERING WATER TREATMENT

CENTRAL WATER TREATMENT PLANT GENERAL ARRANGEMENT

| | |
|---|---|
| Project No.: | 200-01299-16006 |
| Designed By: | W. XU |
| Drawn By: | S. ULREY |
| Checked By: | W. XU |

Fig 9

Copyright: Tetra Tech

8/1/2016 2:02:07 PM - P:\IER\01299\200-01299-16006\CAD\SHEETFILES\D-100 - CENTRAL WTP GA_RAK.DWG - KUCHIBHOTLA, RAM

# Appendix A
# Weir Dewatering Water Quality Data

**Basis of Design Data**
**Dewatering Water Quality Criteria**
**Sunrise Mountain and Historic Lateral Weirs**
**Henderson, Nevada**

| Parameter | Units | Value | |
|---|---|---|---|
| | | Average | Maximum |
| Flow | gpm | 5,000 | 6,900 |
| Perchlorate | ppm | 1.3 | 1.8 |
| Sulfate | ppm | 1175 | 1700 |
| Chlorate | ppm | 0.43 | 0.43 |
| Chloride | ppm | 493 | 625 |
| Magnesium | ppm | 110 | 135 |
| Potassium | ppm | 33 | 37 |
| Sodium | ppm | 510 | 640 |
| Calcium | ppm | 420 | 420 |
| Nitrate-NO3 | ppm | 30 | 36 |
| Total Dissolved Solids | ppm | 3050 | 4,150 |
| Total Suspended Solids | ppm | 12 | 14 |

gpm - gallons per minute
ppm = parts per million

# Appendix B
# Cost Estimate Worksheets

## Table 1A. CAPITAL COST BREAKDOWN FOR BIOLOGICAL TREATMENT

| Detailed Breakdown of costs | | | | | |
|---|---|---|---|---|---|
| Purchase Equipment | | | | | |
| Item Number | Description | Quantity | Unit | Unit Cost | Total Cost |
| | **Weir Construction Sites** | | | | |
| 1 | Transfer Pump @ Sunrise Mountain Weir<br>3,450 gpm @ ~200 ft TDH | 3 | EA | $42,500 | $127,500 |
| 2 | Transfer Pump @ Historic Lateral Weir<br>3,450 gpm @ ~200 ft TDH | 3 | EA | $42,500 | $127,500 |
| 3 | VFD for Pumps | 6 | EA | $24,000 | $144,000 |
| | | | | | |
| | **Centralized Water Treatment Plant Equipment** | | | | |
| 1 | 10 Mil Gallon Carbon Steel Weld Tank (D = 200 ft; H = 45 ft) | 1 | EA | $8,000,000 | $8,000,000 |
| 2 | Concrete Foundation | 1 | EA | $1,200,000 | $1,200,000 |
| 3 | 3,500 gpm transfer pumps | 3 | EA | $32,000 | $96,000 |
| 4 | VFD for Transfer Pumps | 3 | EA | $15,000 | $45,000 |
| 5 | Fixed Bed Biological Reactor (D = 20 ft, H = 24 ft) | 4 | EA | $300,000 | $1,200,000 |
| 6 | Air Compressor, 50 CFM @ 60 psig | 1 | EA | $10,000 | $10,000 |
| 7 | Ethanol Storage Tank and Chemical Feed System | 1 | EA | $60,000 | $60,000 |
| 8 | Urine Storage Tank and Feed System | 1 | EA | $60,000 | $60,000 |
| 9 | Phosphoric Acid Storage Tank and Feed System | 1 | EA | $60,000 | $60,000 |
| 10 | Micronutrient Storage Tank and Feed System | 1 | EA | $60,000 | $60,000 |
| 6 | Effluent Discharge Pump, 3,450 gpm @ 23 ft TDH | 3 | EA | $22,400 | $67,200 |
| | Purge Waste Transfer Pump, 60 gpm @ 19 ft TDH | 2 | EA | $5,950 | $11,900 |
| 7 | Clamp on Ultrasonic Flow meter | 2 | EA | $4,600 | $9,200 |
| | | | | | |
| | **Site Work and Yard Piping** | | | | |
| 1 | 20" pipe from Weir Construction Sites to WTP | 5,500 | LF | $105.0 | $577,500 |
| 2 | 20" pipe at treated water discharge | 1,000 | LF | $105.0 | $105,000 |
| 3 | Site Clearing (Main Plant) | 1 | LS | $40,000 | $40,000 |
| 4 | Site Clearing at Weir Construction | 2 | LS | $2,000 | $4,000 |
| 5 | Site Grading (Main Plant) | 1 | LS | $200,000 | $200,000 |
| 6 | Site Grading at Weir Construction | 2 | LS | $10,000 | $20,000 |
| 7 | Site Concrete Pavement (Main Plant) | 36000 | SQ FT | $18.0 | $648,000 |
| 8 | Site Concrete Pavement (@ both weir locations) | 2000 | SQ FT | $18.0 | $36,000 |
| 9 | Concrete Pads for Pumps (@ both weir locations) | 2 | CU YD | $900 | $1,800 |
| 10 | Concrete Pad for Control Panel (@ both weir locations) | 1 | CU YD | $900 | $900 |
| 11 | Concrete Pads for all Pumps and Air Compressor at Main Plan | 20 | CU YD | $900 | $18,000 |
| 12 | 8 ft chain link fence | 2500 | LF | $30 | $75,000 |
| 13 | 16 ft double open gate | 4 | EA | $1,000 | $4,000 |
| 14 | Site Demolition | 1 | LS | $500,000 | $500,000 |
| | | | | | |
| | | **SubTotal** | | | **$13,508,500** |
| | | | | | |
| | Additional Civil, Structure and Mechanical Work | 15% | | | $2,026,275 |
| | Electrical and Control (Excluding site work and yard piping) | 20% | | | $2,255,660 |
| | Engineering (12%) | 12% | | | $1,621,020 |
| | Construction Management | | | | $200,000 |
| | Contingency (30%) | 30% | | | $4,052,550 |
| | Start Up | | | | $150,000 |
| | Permitting | | | | $200,000 |
| | Tax (All above) | 8% | | | $1,921,120.40 |
| | Freight (Equipment excluding the tank) | 8% | | | $166,264 |
| | Tetra Tech Markup * | 8.5% | | | $1,556,069.42 |
| | | | | | |
| | | | | | |
| **Total Capital Cost** | | | | **$27,657,459** | |

* Tetra Tech markup is for illustrative purposes only; actual markup will be determined upon project award specifics and consistent with established T&Cs with the Trust.

## Table 1B. MONTHLY OPERATING AND MAINTENANCE COST BIOLOGICAL TREATMENT AT 6,900 GPM FLOW

### Rental Equipment

| Item Number | Description | Quantity | Unit | Cost/Month | Total Cost/Month | Mobilization/Demobilization |
|---|---|---|---|---|---|---|
| 1 | 20,000 gallon Baker Tank | 6 | EA | $1,000 | $6,000 | $24,000 |
| 2 | 20,000 gallon Baker Tank | 2 | EA | $1,000 | $2,000 | $8,000 |
| 3 | 20,000 gallon Baker Mix Tank | 2 | EA | $3,500 | $7,000 | $12,000 |
| 3 | Office Trailer | 1 | EA | $500 | $500 | $2,000 |
| 4 | Generator | 3 | EA | $3,000 | $9,000 | $3,000 |
| | | | | | | |
| | Tax (8%) | | | | $1,960 | $3,920 |
| | Contingency (30%) | | | | $7,350 | $14,700 |
| | Tetra Tech Markup (8.5%)* | | | | $2,083 | $4,165 |
| | | | | | | |
| | | | | | | |
| **Total Monthly Rental Cost** | | | | | **$35,893** | **$71,785** |

### Operational Staff Cost

| Item Number | Description | Unit Price | Unit | Quantity | Unit | Cost |
|---|---|---|---|---|---|---|
| 1 | Electrical Cost | 0.1 | $/KWh | 21,456 | KWh/Day | $64,368 |
| 2 | Onsite Process Engineer (Full Time) | 120 | $/hr | 248 | Hr/Month | $29,760 |
| 3 | Senior Process Engineer (Part Time from Office) | 150 | $/hr | 50 | Hr/Month | $7,500 |
| 4 | Operator | 80 | $/hr | 1,934 | Hr/Month | $154,752 |
| 5 | Chemical Cost | | | | | $30,000 |
| 6 | Operation Water Quality Monitoring | | | | | $5,000 |
| | | | | | | |
| | Tetra Tech Markup (excluding labor, 8.5%)* | | | | | $8,446.28 |
| | | | | | | |
| **Total Monthly Operating Cost** | | | | | | **$299,826** |

* Tetra Tech markup is for illustrative purposes only; actual markup will be determined upon project award specifics and consistent with established T&Cs with the Trust.

## Table 1C. MONTHLY OPERATING AND MAINTENANCE COST BIOLOGICAL TREATMENT AT 5,000 GPM FLOW

### Rental Equipment

| Item Number | Description | Quantity | Unit | Cost/Month | Total Cost/Month | Mobilization/Demobilization |
|---|---|---|---|---|---|---|
| 1 | 20,000 gallon Baker Tank | 6 | EA | $1,000 | $6,000 | $24,000 |
| 2 | 20,000 gallon Baker Tank | 2 | EA | $1,000 | $2,000 | $8,000 |
| 3 | 20,000 gallon Baker Mix Tank | 2 | EA | $3,500 | $7,000 | $12,000 |
| 3 | Office Trailer | 1 | EA | $500 | $500 | $2,000 |
| 4 | Generator | 3 | EA | $3,000 | $9,000 | $3,000 |
| | | | | | | |
| | Tax (8%) | | | | $1,960 | $3,920 |
| | Contingency (30%) | | | | $7,350 | $14,700 |
| | Tetra Tech Markup (8.5%)* | | | | $2,083 | $4,165 |
| | | | | | | |
| | | | | | | |
| **Total Monthly Rental Cost** | | | | | **$35,893** | **$71,785** |

### Operational Staff Cost

| Item Number | Description | Unit Price | Unit | Quantity | Unit | Cost |
|---|---|---|---|---|---|---|
| 1 | Electrical Cost | 0.1 | $/KWh | 12,874 | KWh/Day | $38,621 |
| 2 | Onsite Process Engineer (Full Time) | 120 | $/hr | 248 | Hr/Month | $29,760 |
| 3 | Senior Process Engineer (Part Time from Office) | 150 | $/hr | 50 | Hr/Month | $7,500 |
| 4 | Operator | 80 | $/hr | 1,934 | Hr/Month | $154,752 |
| 5 | Chemical Cost | | | | | $24,000 |
| 6 | Operation Water Quality Monitoring | | | | | $5,000 |
| | | | | | | |
| | Tetra Tech Markup (excluding labor, 8.5%)* | | | | | $5,747.77 |
| | | | | | | |
| **Total Monthly Operating Cost** | | | | | | **$265,381** |

* Tetra Tech markup is for illustrative purposes only; actual markup will be determined upon project award specifics and consistent with established T&Cs with the Trust.

## Table 1D. OPERATING COSTS FOR BIOLOGICAL TREATMENT

| OPERATING COST FOR 12 MONTHS | | |
|---|---|---|
| Month | Cost ($MM) | |
| | 6,900 GPM | 5,000 GPM |
| | | |
| 1 | $0.41 | $0.37 |
| 2 | $0.74 | $0.67 |
| 3 | $1.08 | $0.98 |
| 4 | $1.41 | $1.28 |
| 5 | $1.75 | $1.58 |
| 6 | $2.09 | $1.88 |
| 7 | $2.42 | $2.18 |
| 8 | $2.76 | $2.48 |
| 9 | $3.09 | $2.78 |
| 10 | $3.43 | $3.08 |
| 11 | $3.76 | $3.39 |
| 12 | $4.10 | $3.69 |

## Figure 1. PRELIMINARY CAPITAL AND OPERATING COST ESTIMATES

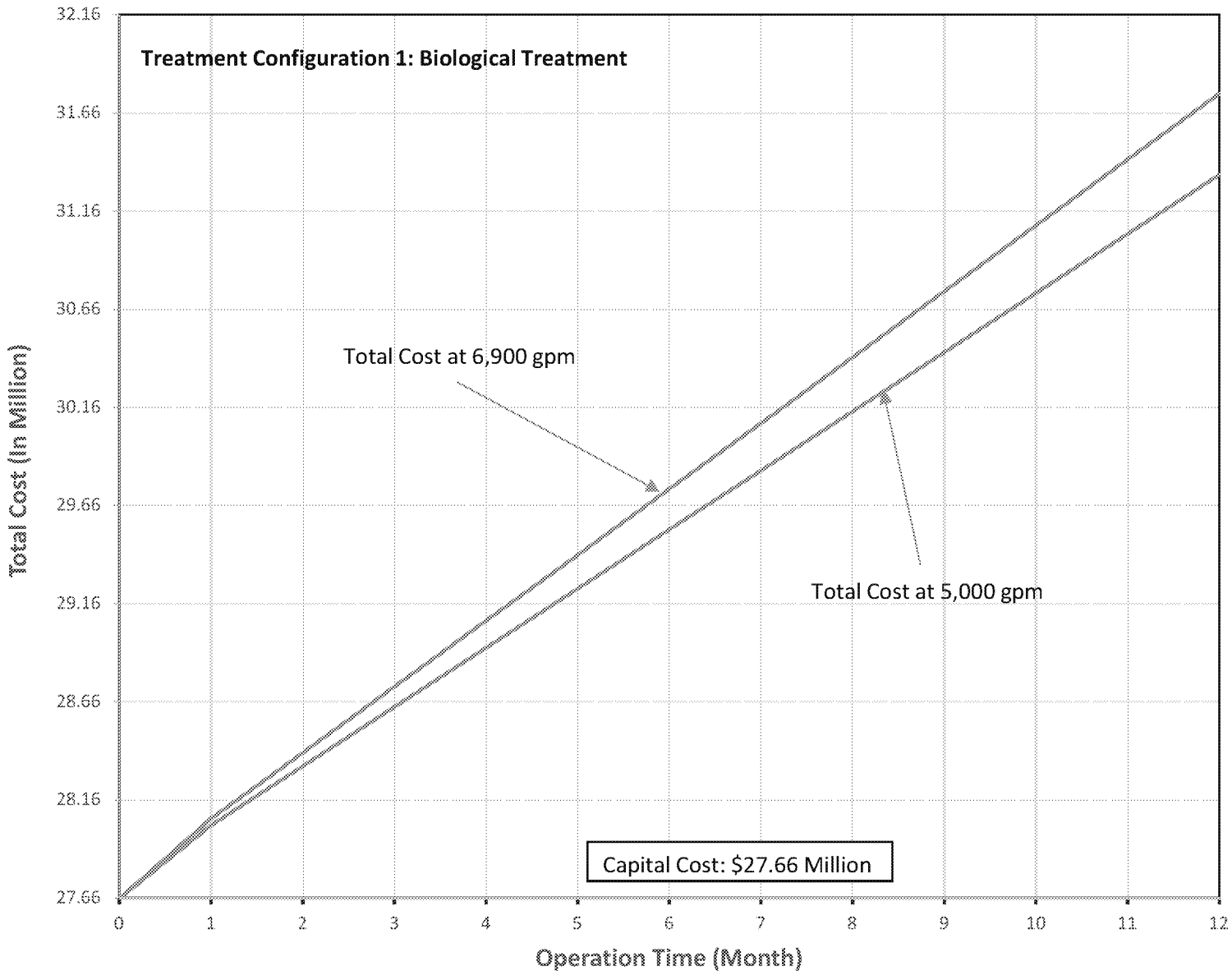

## Table 2A. CAPITAL COST BREAKDOWN SBA ION EXCHANGE TREATMENT WITH ON-SITE SOLIDS MANAGEMENT

| Detailed Breakdown of Costs | | | | | |
|---|---|---|---|---|---|
| Purchase Equipment | | | | | |
| Item Number | Description | Quantity | Unit | Unit Cost | Total Cost |
| | **Weir Construction Sites** | | | | |
| 1 | Transfer Pump @ Sunrise Mountain Weir<br>3,450 gpm @ ~200 ft TDH | 3 | EA | $42,500 | $127,500 |
| 2 | Transfer Pump @ Historic Lateral Weir<br>3,450 gpm @ ~200 ft TDH | 3 | EA | $42,500 | $127,500 |
| 3 | VFD for Pumps | 6 | EA | $24,000 | $144,000 |
| | | | | | |
| | **Centralized Water Treatment Plant Equipment** | | | | |
| 1 | Multi Media Pressure Filter | 6 | EA | $220,000 | $1,320,000 |
| 2 | Ion Exchange Skid (Two Vessel per Skid) | 4 | EA | $240,000 | $960,000 |
| 3 | First Batch of Ion Exchange Resin | 4,800 | CU FT | $206 | $988,800 |
| 3 | Effluent Discharge Pump, 3,450 gpm @ 23 ft TDH | 3 | EA | $22,400 | $67,200 |
| 4 | Filter Backwash Pump, 1,200 gpm @ 30 psig | 2 | EA | $12,560 | $25,120 |
| 5 | Backwash Waste Transfer Pump, 60 gpm @ 19 ft TDH | 2 | EA | $5,950 | $11,900 |
| 6 | Air Compressor, 20 CFM @ 60 psig | 1 | EA | $4,750 | $4,750 |
| 7 | Clamp on Ultrasonic Flow meter | 5 | EA | $4,600 | $23,000 |
| | | | | | |
| | **Site Work and Yard Piping** | | | | |
| 1 | 20" pipe from Weir Construction Sites to WTP | 5,500 | LF | $105.0 | $577,500 |
| 2 | 20" pipe at treated water discharge | 1,000 | LF | $105.0 | $105,000 |
| 3 | Site Clearing (Main Plant) | 1 | LS | $10,000 | $10,000 |
| 4 | Site Clearing at Weir Contraction | 2 | LS | $2,000 | $4,000 |
| 5 | Site Grading (Main Plant) | 1 | LS | $50,000 | $50,000 |
| 6 | Site Grading at Weir Construction | 2 | LS | $10,000 | $20,000 |
| 7 | Site Concrete Pavement (Main Plant) | 18000 | SQ FT | $18.0 | $324,000 |
| 8 | Site Concrete Pavement (@ both weir locations) | 2000 | SQ FT | $18.0 | $36,000 |
| 9 | Concrete Pads for Pumps (@ both weir locations) | 2 | CU YD | $900 | $1,800 |
| 10 | Concrete Pad for Control Panel (@ both weir locations) | 1 | CU YD | $900 | $900 |
| 11 | Concrete Pads for all Pumps and Air Compressor at Main Plan | 20 | CU YD | $900 | $18,000 |
| 12 | 8 ft chain link fence | 1300 | LF | $30 | $39,000 |
| 13 | 16 ft double open gate | 4 | EA | $1,000 | $4,000 |
| 14 | Site Demolition | 1 | LS | $200,000 | $200,000 |
| | | | | | |
| | | **SubTotal** | | | **$5,189,970** |
| | | | | | |
| | Additional Civil, Structure and Mechanical Work | 15% | | | $778,496 |
| | Electrical and Control (Excluding site work and yard piping) | 15% | | | $569,966 |
| | Engineering (15%) | 15% | | | $778,496 |
| | Contingency (30%) | 30% | | | $1,556,991 |
| | Start Up | | | | $150,000 |
| | Permitting | | | | $200,000 |
| | Tax (All above) | 8% | | | $737,913 |
| | Freight (Equipment) | 8% | | | $303,981.60 |
| | Tetra Tech Markup * | 8.5% | | | $611,355 |
| | | | | | |
| | | | | | |
| **Total Capital Cost** | | | | **$10,877,168** | |

* Tetra Tech markup is for illustrative purposes only; actual markup will be determined upon project award specifics and consistent with established T&Cs with the Trust.

## Table 2B. MONTHLY OPERATING AND MAINTENANCE COST SBA ION EXCHANGE TREATMENTWITH ON-SITE SOLIDS MANAGEMENT AT 6,900 GPM FLOW

**Rental Equipment**

| Item Number | Description | Quantity | Unit | Cost/Month | Total Cost/Month | Mobilization/Demobilization |
|---|---|---|---|---|---|---|
| 1 | 20,000 gallon Baker Tank | 6 | EA | $1,000 | $6,000 | $24,000 |
| 2 | 20,000 gallon Baker Mix Tank | 3 | EA | $3,500 | $10,500 | $12,000 |
| 3 | 20,000 gallon Baker Tank | 2 | EA | $1,000 | $2,000 | $8,000 |
| 4 | Office Trailer | 1 | EA | $500 | $500 | $2,000 |
| 5 | Generator | 3 | EA | $3,000 | $9,000 | $3,000 |
| | | | | | | |
| | Tax (8%) | | | | $2,240 | $3,920 |
| | Contingency (30%) | | | | $8,400 | $14,700 |
| | Tetra Tech Markup (8.5%)* | | | | $2,380 | $4,165 |
| | | | | | | |
| | | | | | | |
| **Total Monthly Rental Cost** | | | | | **$41,020** | **$71,785** |

**Resin Replacement and Operational Staff Cost**

| Item Number | Description | Unit Price | Unit | Quantity | Unit | Cost |
|---|---|---|---|---|---|---|
| 1 | Ion Exchange Resin Replacement | 206 | $/Cu Ft | 2,192 | Cu Ft/Month | $451,552 |
| 2 | Ion Exchange Resin Disposal Cost | 60 | $/ Cu Ft | 2,192 | Cu Ft/Month | $131,520 |
| 3 | Electrical Cost | 0.1 | $/KWh | 21,456 | KWh/Day | $64,368 |
| 4 | Onsite Process Engineer (Full Time) | 120 | $/hr | 248 | Hr/Month | $29,760 |
| 5 | Senior Process Engineer (Part Time from Office) | 150 | $/hr | 50 | Hr/Month | $7,500 |
| 6 | Operator | 80 | $/hr | 1,934 | Hr/Month | $154,752 |
| 7 | Operation Water Quality Monitoring | | | | | $5,000 |
| | | | | | | |
| | Tetra Tech Markup (excluding labor, 8.5%)* | | | | | $49,986.12 |
| | | | | | | |
| **Total Monthly Operating Cost** | | | | | | **$894,438** |

* Tetra Tech markup is for illustrative purposes only; actual markup will be determined upon project award specifics and consistent with established T&Cs with the Trust.

## Table 2C. MONTHLY OPERATING AND MAINTENANCE COST SBA ION EXCHANGE TREATMENT WITH ON-SITE SOLIDS MANAGEMENT AT 5,000 GPM FLOW

### Rental Equipment

| Item Number | Description | Quantity | Unit | Cost/Month | Total Cost/Month | Mobilization/Demobilization |
|---|---|---|---|---|---|---|
| 1 | 20,000 gallon Baker Tank | 6 | EA | $1,000 | $6,000 | $24,000 |
| 2 | 20,000 gallon Baker Mix Tank | 3 | EA | $3,500 | $10,500 | $12,000 |
| 3 | 20,000 gallon Baker Tank | 2 | EA | $1,000 | $2,000 | $8,000 |
| 4 | Office Trailer | 1 | EA | $500 | $500 | $2,000 |
| 5 | Generator | 3 | EA | $3,000 | $9,000 | $3,000 |
| | | | | | | |
| | Tax (8%) | | | | $2,240 | $3,920 |
| | Contingency (30%) | | | | $8,400 | $14,700 |
| | Tetra Tech Markup (8.5%)* | | | | $2,380 | $4,165 |
| | | | | | | |
| | | | | | | |
| **Total Monthly Rental Cost** | | | | | **$41,020** | **$71,785** |

### Resin Replacement and Operational Staff Cost

| Item Number | Description | Unit Price | Unit | Quantity | Unit | Cost |
|---|---|---|---|---|---|---|
| 1 | Ion Exchange Resin Replacement | 206 | $/Cu Ft | 1,155 | Cu Ft/Month | $237,930 |
| 2 | Ion Exchange Resin Disposal Cost | 60 | $/ Cu Ft | 1,155 | Cu Ft/Month | $69,300 |
| 3 | Electrical Cost | 0.1 | $/KWh | 12,874 | KWh/Day | $38,621 |
| 4 | Onsite Process Engineer (Full Time) | 120 | $/hr | 248 | Hr/Month | $29,760 |
| 5 | Senior Process Engineer (Part Time from Office) | 150 | $/hr | 50 | Hr/Month | $7,500 |
| 6 | Operator | 80 | $/hr | 1,934 | Hr/Month | $154,752 |
| 7 | Operation Water Quality Monitoring | | | | | $5,000 |
| | | | | | | |
| | Tetra Tech Markup (excluding labor, 8.5%)* | | | | | $26,540 |
| | | | | | | |
| **Total Monthly Operating Cost** | | | | | | **$569,402** |

* Tetra Tech markup is for illustrative purposes only; actual markup will be determined upon project award specifics and consistent with established T&Cs with the Trust.

## Table 2D. OPERATING COSTS

## SBA Ion Exchange System with On-Site Solids Management

| OPERATING COST FOR 12 MONTHS | | |
|---|---|---|
| Month | Cost ($MM) | |
| | 6,900 GPM | 5,000 GPM |
| | | |
| 1 | $1.01 | $0.68 |
| 2 | $1.94 | $1.29 |
| 3 | $2.88 | $1.90 |
| 4 | $3.81 | $2.51 |
| 5 | $4.75 | $3.12 |
| 6 | $5.68 | $3.73 |
| 7 | $6.62 | $4.34 |
| 8 | $7.56 | $4.96 |
| 9 | $8.49 | $5.57 |
| 10 | $9.43 | $6.18 |
| 11 | $10.36 | $6.79 |
| 12 | $11.30 | $7.40 |

## Figure 2. PRELIMINARY CAPITAL AND OPERATING COST ESTIMATES

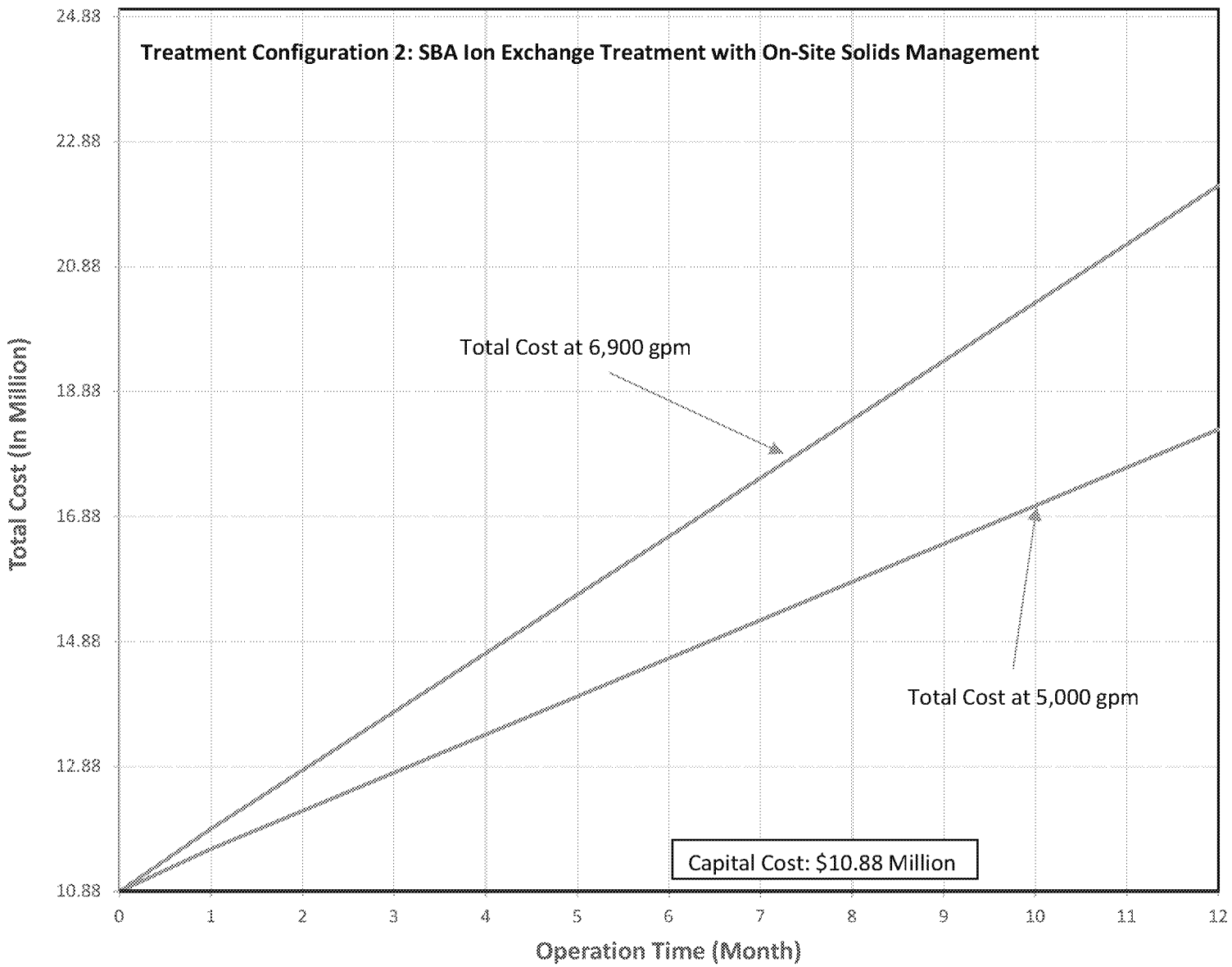

## Table 3A. CAPITAL COST BREAKDOWN SBA ION EXCHANGE TREATMENT WITH OFF-SITE SOLIDS MANAGEMENT

| Detailed Breakdown of costs | | | | | |
|---|---|---|---|---|---|
| Purchase Equipment | | | | | |
| Item Number | Description | Quantity | Unit | Unit Cost | Total Cost |
| | **Weir Construction Sites** | | | | |
| 1 | Transfer Pump @ Sunrise Mountain Weir<br>3,450 gpm @ ~200 ft TDH | 3 | EA | $42,500 | $127,500 |
| 2 | Transfer Pump @ Historic Lateral Weir<br>3,450 gpm @ ~200 ft TDH | 3 | EA | $42,500 | $127,500 |
| 3 | VFD for Pumps | 6 | EA | $24,000 | $144,000 |
| | | | | | |
| | **Centralized Water Treatment Plant Equipment** | | | | |
| 1 | Multi Media Pressure Filter | 6 | EA | $220,000 | $1,320,000 |
| 2 | Ion Exchange Skid (Two Vessel per Skid) | 4 | EA | $240,000 | $960,000 |
| 3 | First Batch of Ion Exchange Resin | 4,800 | CU FT | $206 | $988,800 |
| 4 | Effluent Discharge Pump, 3,450 gpm @ 23 ft TDH | 3 | EA | $22,400 | $67,200 |
| 5 | Filter Backwash Pump, 1,200 gpm @ 30 psig | 2 | EA | $12,560 | $25,120 |
| 6 | Backwash Waste Transfer Pump, 40 gpm @ 19 ft TDH | 1 | EA | $5,500 | $5,500 |
| 7 | Clamp on Ultrasonic Flow meter | 5 | EA | $4,600 | $23,000 |
| 8 | Separator Transfer Pump, 40 gpm @ 25 ft TDH | 2 | EA | $5,500 | $11,000 |
| 9 | Solids Liquid Separator | 1 | LS | $100,000 | $100,000 |
| 10 | Chemical / Polymer Injection System | 1 | LS | $6,000 | $6,000 |
| 11 | Air Compressor, 20 CFM @ 60 psig | 1 | EA | $4,750 | $4,750 |
| | | | | | |
| | **Site Work and Yard Piping** | | | | |
| 1 | 20" pipe from Weir Construction Sites to WTP | 5,500 | LF | $105.0 | $577,500 |
| 2 | 20" pipe at treated water discharge | 1,000 | LF | $105.0 | $105,000 |
| 3 | Site Clearing (Main Plant) | 1 | LS | $10,000 | $10,000 |
| 4 | Site Clearing at Weir Construction | 2 | LS | $2,000 | $4,000 |
| 5 | Site Grading (Main Plant) | 1 | LS | $50,000 | $50,000 |
| 6 | Site Grading at Weir Construction | 2 | LS | $10,000 | $20,000 |
| 7 | Site Concrete Pavement (Main Plant) | 18000 | SQ FT | $18.0 | $324,000 |
| 8 | Site Concrete Pavement (@ both weir locations) | 2000 | SQ FT | $18.0 | $36,000 |
| 9 | Concrete Pads for Pumps (@ both weir locations) | 2 | CU YD | $900 | $1,800 |
| 10 | Concrete Pad for Control Panel (@ both weir locations) | 1 | CU YD | $900 | $900 |
| 11 | Concrete Pads for all Pumps and Air Compressor at Main Plan | 20 | CU YD | $900 | $18,000 |
| 12 | 8 ft chain link fence | 1300 | LF | $30 | $39,000 |
| 13 | 16 ft double open gate | 4 | EA | $1,000 | $4,000 |
| 14 | Site Demolition | 1 | LS | $200,000 | $200,000 |
| | | | | | |
| | | **SubTotal** | | | **$5,300,570** |
| | | | | | |
| | Additional Civil, Structure and Mechanical Work | 15% | | | $795,086 |
| | Electrical and Control (Excluding site work and yard piping) | 15% | | | $586,556 |
| | Engineering (15%) | 15% | | | $795,086 |
| | Contingency (30%) | 30% | | | $1,590,171 |
| | Start Up | | | | $150,000 |
| | Permitting | | | | $200,000 |
| | Tax (All above) | 8% | | | $753,397 |
| | Freight (Equipment) | 8% | | | $280,910 |
| | Tetra Tech Markup * | 8.5% | | | $621,615 |
| | | | | | |
| | | | | | |
| | | | | | |
| | | | | | |
| **Total Capital Cost** | | | | **$11,073,390** | |

* Tetra Tech markup is for illustrative purposes only; actual markup will be determined upon project award specifics and consistent with established T&Cs with the Trust.

## Table 3B. MONTHLY OPERATING AND MAINTENANCE COST SBA ION EXCHANGE TREATMENT WITH OFF-SITE SOLIDS MANAGEMENT 6,900 GPM FLOW

**Rental Equipment**

| Item Number | Description | Quantity | Unit | Cost/Month | Total Cost/Month | Mobilization/Demobilization |
|---|---|---|---|---|---|---|
| 1 | 20,000 gallon Baker Tank | 6 | EA | $1,000 | $6,000 | $24,000 |
| 2 | 20,000 gallon Baker Mix Tank | 3 | EA | $3,500 | $10,500 | $12,000 |
| 3 | 20,000 gallon Baker Tank | 2 | EA | $1,000 | $2,000 | $8,000 |
| 4 | Office Trailer | 1 | EA | $500 | $500 | $2,000 |
| 5 | Generator | 3 | EA | $3,000 | $9,000 | $3,000 |
| 6 | Centrifuge w/ Sludge Feed Pump | 1 | LS | $30,000 | $30,000 | $6,000 |
| | | | | | | |
| | Tax (8%) | | | | $4,640 | $2,480 |
| | Contingency (30%) | | | | $17,400 | $9,300 |
| | Tetra Tech Markup (8.5%)* | | | | $4,930 | $4,675 |
| | | | | | | |
| **Total Rental Equipment Cost** | | | | | **$84,970** | **$71,455** |

**Resin Replacement and Operational Staff Cost**

| Item Number | Description | Unit Price | Unit | Quantity | Unit | Cost |
|---|---|---|---|---|---|---|
| 1 | Ion Exchange Resin Replacement | 206 | $/Cu Ft | 2,192 | Cu Ft/Month | $451,552 |
| 2 | Ion Exchange Resin Disposal Cost | 60 | $/ Cu Ft | 2,192 | Cu Ft/Month | $131,520 |
| 3 | Electrical Cost | 0.1 | $/KWh | 21,456 | KWh/Day | $64,368 |
| 4 | Onsite Process Engineer (Full Time) | 120 | $/hr | 248 | Hr/Month | $29,760 |
| 5 | Senior Process Engineer (Part Time from Office) | 150 | $/hr | 50 | Hr/Month | $7,500 |
| 6 | Operator | 80 | $/hr | 1,934 | Hr/Month | $154,752 |
| 7 | Polymer Cost/Chemical Cost | 10 | $/lb | 300 | Lb/Month | $3,000 |
| 8 | Sludge Disposal Cost | 87 | $/ton | 120 | tons/month | $10,440 |
| 9 | Operation Water Quality Monitoring | | | | | $5,000 |
| | | | | | | |
| | Tetra Tech Markup (excluding labor, 8.5%)* | | | | | $51,129 |
| | | | | | | |
| **Total Monthly Operating Cost** | | | | | | **$909,021** |

* Tetra Tech markup is for illustrative purposes only; actual markup will be determined upon project award specifics and consistent with established T&Cs with the Trust.

## Table 3C. MONTHLY OPERATING AND MAINTENANCE COST SBA ION EXCHANGE TREATMENT WITH OFF-SITE SOLIDS MANAGEMENT 5,000 GPM FLOW

**Rental Equipment**

| Item Number | Description | Quantity | Unit | Cost/Month | Total Cost/Month | Mobilization/Demobilization |
|---|---|---|---|---|---|---|
| 1 | 20,000 gallon Baker Tank | 6 | EA | $1,000 | $6,000 | $24,000 |
| 2 | 20,000 gallon Baker Mix Tank | 3 | EA | $3,500 | $10,500 | $12,000 |
| 3 | 20,000 gallon Baker Tank | 2 | EA | $1,000 | $2,000 | $8,000 |
| 4 | Office Trailer | 1 | EA | $500 | $500 | $2,000 |
| 5 | Generator | 3 | EA | $3,000 | $9,000 | $3,000 |
| 6 | Centrifuge w/ Sludge Feed Pump | 1 | LS | $30,000 | $30,000 | $6,000 |
| | | | | | | |
| | Tax (8%) | | | | $4,640 | $2,480 |
| | Contingency (30%) | | | | $17,400 | $9,300 |
| | Tetra Tech Markup (8.5%)* | | | | $4,930 | $4,675 |
| | | | | | | |
| **Total Monthly Rental Equipment Cost** | | | | | **$84,970** | **$71,455** |

**Resin Replacement and Operational Staff Cost**

| Item Number | Description | Unit Price | Unit | Quantity | Unit | Cost |
|---|---|---|---|---|---|---|
| 1 | Ion Exchange Resin Replacement | 206 | $/Cu Ft | 1,155 | Cu Ft/Month | $237,930 |
| 2 | Ion Exchange Resin Disposal Cost | 60 | $/ Cu Ft | 1,155 | Cu Ft/Month | $69,300 |
| 3 | Electrical Cost | 0.1 | $/KWh | 12,874 | KWh/Day | $38,621 |
| 4 | Onsite Process Engineer (Full Time) | 120 | $/hr | 248 | Hr/Month | $29,760 |
| 5 | Senior Process Engineer (Part Time from Office) | 150 | $/hr | 50 | Hr/Month | $7,500 |
| 6 | Operator | 80 | $/hr | 1,934 | Hr/Month | $154,752 |
| 7 | Polymer Cost/Chemical Cost | 10 | $/lb | 240.0 | Lb/Month | $2,400 |
| 8 | Sludge Disposal Cost | 87 | $/ton | 72.00 | tons/month | $6,264 |
| 9 | Operation Water Quality Monitoring | | | | | $5,000 |
| | | | | | | |
| | Tetra Tech Markup (excluding labor, 8.5%)* | | | | | $27,276 |
| | | | | | | |
| **Total Monthly Operating Cost** | | | | | | **$578,803** |

* Tetra Tech markup is for illustrative purposes only; actual markup will be determined upon project award specifics and consistent with established T&Cs with the Trust.

## Table 3D. OPERATING COSTS

## SBA Ion Exchange Treatment with Off-Site Solids Management

| OPERATING COST FOR 12 MONTHS | | |
|---|---|---|
| Month | O & M Cost ($MM) | |
| | 6,900 GPM | 5,000 GPM |
| | | |
| 1 | $1.07 | $0.74 |
| 2 | $2.06 | $1.40 |
| 3 | $3.05 | $2.06 |
| 4 | $4.05 | $2.73 |
| 5 | $5.04 | $3.39 |
| 6 | $6.04 | $4.05 |
| 7 | $7.03 | $4.72 |
| 8 | $8.02 | $5.38 |
| 9 | $9.02 | $6.05 |
| 10 | $10.01 | $6.71 |
| 11 | $11.01 | $7.37 |
| 12 | $12.00 | $8.04 |

## Figure 3. PRELIMINARY CAPITAL AND OPERATING COST ESTIMATES

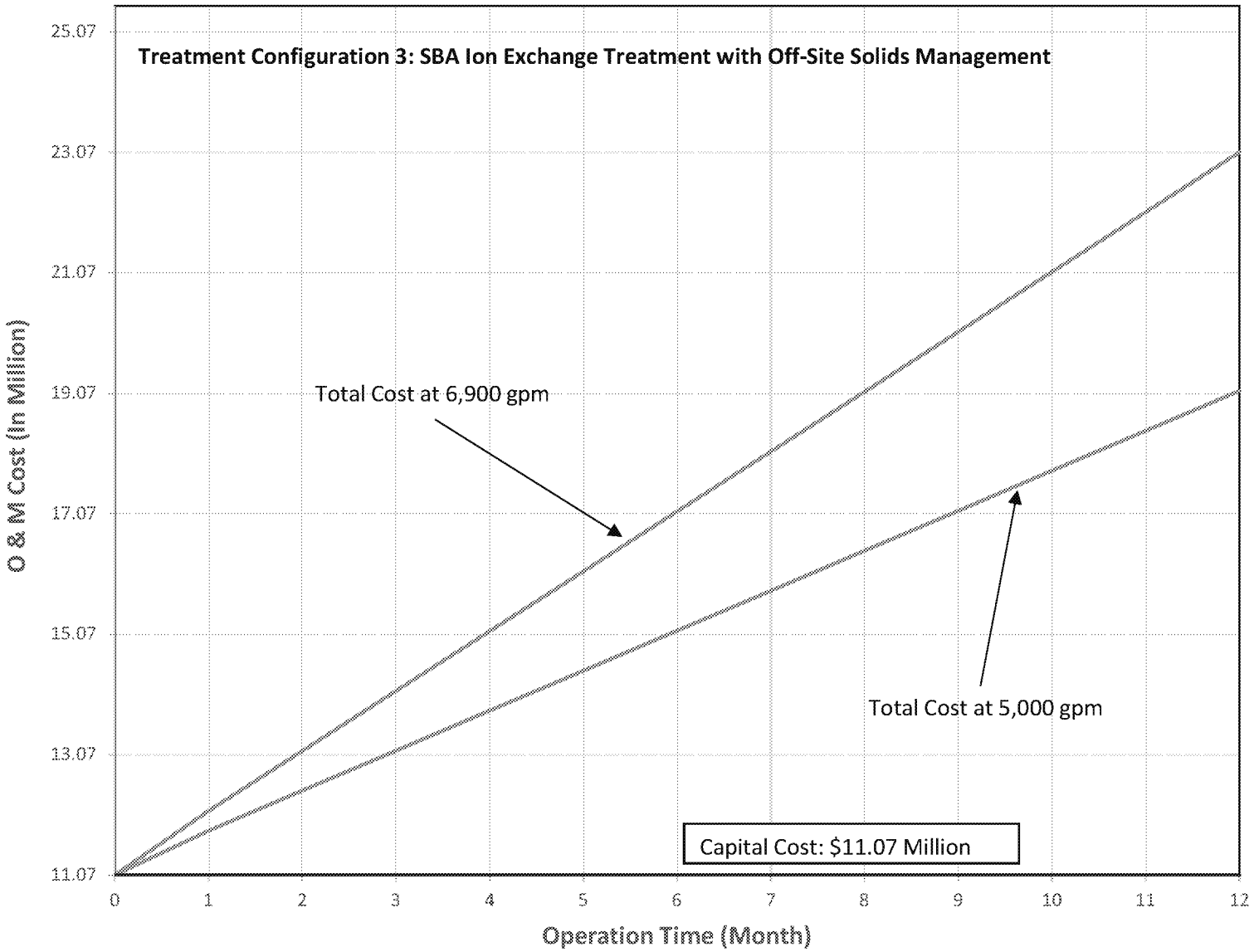

# Appendix C
# Resin Data Sheets and SDSs

Purolite®

PRODUCT DATA SHEET

# Purolite® A532E
## Gel Strong Base Anion Exchange Resin

Purolite® A532E is a unique dual amine bifunctional resin that exhibits extremely high selectivity for hydrophobic anions such as perchlorate and pertechnetate.

The product is ideally suited for removal of trace levels of these types of anions from ground or potable water in which competing anions are present in concentrations typically 1000 times greater or more. Analog testing shows that the product can reduce influent perchlorate in contaminated water to less than 1 ppb.

Because of its high capacity, service run times can be relatively long compared to standard resins, the product is designed to be used on a one-time "load and burn" basis.

### TYPICAL PHYSICAL AND CHEMICAL CHARACTERISTICS

**BASIC FEATURES:**

| | |
|---|---|
| **Application** | Highly Selective for Perchlorate, Pertechnetate and other hydrophobic anions |
| **Polymer Structure** | Gel polystyrene crosslinked with divinylbenzene |
| **Appearance** | Spherical Beads |
| **Functional Group** | Bifunctional Quaternary amines |
| **Ionic Form as Shipped** | $Cl^-$ |

**PRODUCT INFORMATION:**

| | |
|---|---|
| **Total Capacity (min.)** | 0.85 eq/l (17.5 Kg/ft$^3$) ($Cl^-$ form) |
| **Moisture Retention, $Cl^-$ Form** | 36 - 45 % |
| **Mean Diameter** | 650 ± 50 µm |
| **Uniformity Coefficient (max.)** | 1.2 |
| **Specific Gravity** | 1.04 |
| **Shipping Weight (approx.)** | 660 - 700 g/l (41.3 - 43.8 lb/ft$^3$) |
| **Temp Limit, $Cl^-$ Form** | 100°C (212°F) |
| **Temp Limit, $OH^-$ Form** | 60°C (140°F) |

Manufactured to provide a minimum of 90% of the beads with a breaking weight greater than 300 grams/bead

**Americas**
T +1 610.668.9090
F +1 484.384.2751
americas@purolite.com

**Europe**
T +44 1443 229334
F +44 1443 227073
europe@purolite.com

**Asia Pacific**
T +86 571 876 31382
F +86 571 876 31385
asiapacific@purolite.com

© 2013 All rights reserved

Purolite®

# MATERIAL SAFETY DATA SHEET

## 1. Identification of the substance or preparation and of the company/undertaking

| | | |
|---|---|---|
| **1.1.** | Identification of substance or preparation: | **Purolite® A532E** |
| | Trade name or designation of mixture: | Benzene, diethenyl-, polymer with ethenylbenzene and ethenylethylbenzene, chloromethylated, trimethylamine-quaternized |
| | EC Number: | Not applicable |
| | REACH Registration Number: | This mixture is exempted from Registration according to the provisions of Title II and VI and Article 2(9) of REACH |
| **1.2.** | Use of the substance/preparation: | Ion Exchange, Adsorbent, and/or Catalyst |
| **1.3.** | Company/undertaking Identification: | The Purolite Company<br>150 Monument Road<br>Bala Cynwyd, PA 19004 USA<br>Tel:+1 610 668 9090<br>Fax:+1 610 668 8139 |
| | Name of Manufacturer: | Purolite S.R.L.<br>Str.Aleea Uzinei nr.11,<br>505700 Victoria,<br>Judetul Brasov,<br>Romania<br>Tel:+40 26 824 3004<br>Fax:+40 26 824 3002<br><br>Purolite (China) Company Limited,<br>Qianlong Economic Development Zone,<br>Qianyuan Town, Deqing County,<br>Huzhou City, Zhejiang, China 313216<br>Tel: +86 572 842 2908<br>Fax:+86 572 842 5345<br><br>The Purolite Company<br>150 Monument Road<br>Bala Cynwyd, PA 19004 USA<br>Tel:+1 610 668 9090<br>Fax:+1 610 668 8139 |
| | Responsible Person: | Ken Shaner |
| | Email: | msds@purolite.com |
| **1.4.** | Emergency Telephone: | USA Toll Free: + 1 866 387 7344, 24 hours 7 days a week<br>USA Direct: + 1 760 602 8703, 24 hours 7 days a week |



ED_002461_00004015-00084

## 2. Hazards identification

Emergency overview
- Physical state: White, yellow, pale amber, cream spherical beads powder
- Odor: Not applicable

- Contact with eyes: May cause temporary eye irritation
- Contact with skin: May be slightly irritating to skin

Low hazard for unusual industrial or commercial handling by trained personnel

OSHA regulatory status
- This mixture is not hazardous according to OSHA 29CFR 1910.1200

Potential health effects
- Inhalation: Limited inhalation hazard at normal work temperatures
- Eye Contact: May cause temporary eye irritation
- Skin Contact: May be slightly irritating to skin
- Ingestion: Under normal conditions of intended use, this material does not pose a risk to health However, ingestion may cause irritation and malaise
- Chronic Health Effects: No other specific acute or chronic health impact noted noted
- Target Organ(s): Eye / Skin
- Potential Physical / Chemical Effects: This mixture is a combustible per NFPA

Environmental effects
- The environmental hazard of the mixture is considered limited

## 3. Composition/information on ingredients

| 3.1 | Ingredient | Concentration | CAS Number | Hazard Statement | R Phrases | Hazard Pictogram | Symbol |
|---|---|---|---|---|---|---|---|
| | Benzene, diethenyl-, polymer with ethenylbenzene and ethenylethylbenzene, chloromethylated, trimethylamine-quaternized | 20-60% | 69011-19-4 | - | - | - | - |
| | Water | 40-80% | 7732-18-5 | - | - | - | - |

## 4. First aid measures

Inhalation:
-No specific first aid measures noted

Eye Contact:
-Any material that contacts the eye should be washed out immediately with water. If easy to do, remove any contact lenses. Get medical attention if any discomfort continues

Skin Contact:
-Wash skin with soap and water

Ingestion:
-Immediately rinse mouth and drink plenty of water (200-300 ml). Large quantities: Get medical attention if irritation persists

## 5. Fire-fighting measures

Flammable Properties
- NFPA Rating Fire = 1

Extinguishing media
- Extinguish with foam, carbon dioxide, dry powder or water fog

Unsuitable extinguishing media
- Not applicable

Special fire fighting procedures
- Self-contained breathing apparatus and full protective clothing must be worn in case of fire

Unusal fire and explosion hazards
- Not available

Hazardous combustion products
- Monomers, residual organics, amines, carbon and nitrogen oxides

Protective measures
- Selection of respiratory protection for fire fighting: follow the general fire precautions indicated in the workplace

## 6. Accidental release measures

Personal precautions:
-Keep people away
-Spillage causes slippery surface

Environmental precautions:
-Do not allow to enter public sewers and watercourses

Methods for cleaning up:
-Sweep up as much as possible and transfer to plastic containers for recovery or disposal

## 7. Handling and storage

**7.1** Handling:

-Avoid contact with eyes and prolonged skin contact. See section 8 of the MSDS for personal protective equipment

**7.2** Storage:

-Store at temperatures above 0 °C
-Store at temperatures below 40 °C
-Keep in original container
-Keep container tightly closed to prevent the loss of water
-Store away from incompatible materials

## 8. Exposure controls/personal protection

**8.1** Exposure limits

- No exposure limits noted for mixture

**8.2** Exposure controls

- Provide adequate ventilation

**8.2.1** Occupational exposure controls

- Respiratory Protection: If engineering controls do not maintain airborne concentrations below recommended exposure limits (where applicable) or to an acceptable level (in countries where exposure limits have not been established), an approved respirator must be worn. In the United States of America, if respirators are used, a program should be instituted to assure compliance with OSHA Standard 63 FR 1152, January 8, 1998. Respirator type: High-efficiency particulate respirator
- Eye Protection: Risk of contact: Wear approved safety goggles
- Hand Protection: Risk of contact: Wear protective gloves. Suitable gloves can be recommended by the glove supplier
- Skin Protection: Risk of contact: Use skin protection. It is a good industrial hygiene practice to minimize skin contact

**8.2.2** Hygiene Measures

- Always observe good personal hygiene measures, such as washing after handling the material and before eating, drinking, and/or smoking. Routinely wash work clothing and protective equipment to remove contaminants

**8.2.3** Environmental exposure controls

- Environmental manager must be informed of all major spillages

## 9. Physical and chemical properties

**9.1** - Appearance: White, yellow, pale amber, cream beads
- Odor: Slight amine
- Odor Threshold: Not available
- Physical State: Solid (bead)
- pH: Neutral aqueous slurry
- Melting Point: Not available
- Freezing Point: Not available
- Boiling Point: Not available
- Flash Point: Not available
- Evaporation Rate: Not available
- Flammability (solid, gas): Not available
- Flammability Limit - Upper/Flammability Limit
- Lower (%): Not available
- Vapor Pressure: Not available
- Vapor Density (Air=1): Not available
- Specific Gravity: 1.06 - 1.12
- Solubility in Water: Insoluble
- Solubility (Other): Not available
- Partition Coefficient (n-Octanol/water): Not available
- Auto Ignition Temperature: Not available
- Decomposition Temperature: Not available

## 10. Stability and reactivity

**10.1** Conditions to avoid:
-Considered stable under normal conditions
-Avoid heat

**10.2** Materials to avoid:
-Incompatible with strong oxidising substances. Contact with strong oxidisers, especially nitric acid, may produce low molecular weight organics that may form explosive mixtures

**10.3** Hazardous decomposition products:
-Thermal decomposition or combustion may liberate carbon oxides and other toxic gases or vapours

**10.4** Possibility of Hazardous Reactions: Not available

## 11. Toxicological information

Acute toxicity:
-No evidence of acute toxicity

Carcinogenicity:
-No evidence of carcinogenic effects

Teratogenicity:
-No evidence of reproductive effects

Mutagenicity:
-No evidence of mutagenic effects

## 12. Ecological information

**12.1** Ecotoxicity
- No data available

**12.2** Mobility
- The mixture is insoluble in water and will sediment in water systems

**12.3** Persistence and degradability
- The mixture is not readily biodegradable

**12.4** Bioaccumulative potential
- Potential to bioaccumulate is low

**12.5** Other adverse effects
- No data available

## 13. Disposal considerations

General Information:
-Dispose of waste and residues in accordance with local authority requirements

Disposal Methods:
-No specific disposal method required

Container:
-Since emptied containers retain product residue, follow label warnings even after container is emptied

## 14. Transport information

-DOT: Not regulated
-TDG: Not regulated
-IATA: Not regulated
-IMDG: Not regulated

## 15. Regulatory information

Canadian Controlled Products Regulations
- This mixture has been classified according to the hazard criteria of the Canadian Controlled Products Regulations, Section 33, and the MSDS contains all required information

WHMIS Classification
- This is not a WHMIS controlled mixture

Mexican Dangerous Statement
- This mixture is not dangerous according to Mexican regulations

Applicable International laws and regulations
- This mixture is exempted from Registration according to the provisions of Title II and VI and Article 2(9) of REACH

Inventory Status
- This mixture or all components are listed or exempt from listing on the following inventory: TSCA, DSL

US Regulations
- CERCLA Hazardous Substance List (40 CFR 302.4): Not regulated
SARA Title III
- Section 302 Extremely Hazardous Substances (40 CFR 355, Appendix A): Not regulated
- Section 311/312 (40 CFR 370):
Acute (Immediate) Chronic (Delayed) Fire Reactive Pressure Generating
- Section 313 Toxic Release Inventory (40 CFR 372): Not regulated

Clean Air Act (CAA) Section 112(r) Accidental Release Prevention (40 CFR 68.130)
- Not regulated

Clean Water Act Section 311 Hazardous Substances (40 CFR 117.3)
- Not regulated

Drug Enforcement Act
- Not regulated

TSCA
- TSCA Section 4(a) Final Test Rules & Testing Consent Orders: Not regulated
- TSCA Section 5(a)(2) Final Significant New Use Rules (SNURs) (40CFR 721, Subpt. E): Not regulated
- TSCA Section 5(e) PMN-Substance Consent Orders: Not regulated
- TSCA Section 12(b) Export Notification (40 CFR 707, Subpt. D): Not regulated

State Regulations
- California Safe Drinking Water and Toxic Enforcement Act of 1986 (Proposition 65): Not regulated
- Massachusetts Right-To-Know List: Not regulated
- Michigan Critical Materials List (Michigan Natural Resources and Environmental Protection Act (Act. 451 of 1994)): Not regulated
- Minnesota Hazardous Substances List: Not regulated
- New Jersey Right-To-Know List: Not regulated
- Pennsylvania Right-To-Know List: Not regulated
- Rhode Island Right-To-Know List: Not regulated

## 16. Other information

HAZARD RATINGS

| | Health Hazard | Fire Hazard | Instability | Special Hazard |
|---|---|---|---|---|
| NFPA | 1 | 1 | 0 | 0 |

Hazard rating: 0 - Minimal; 1 - Slight; 2 - Moderate; 3 - Serious; 4 - Severe
NFPA Label colored diamond code: Blue - Health; Red - Flammability; Yellow - Instability; White - Special Hazards

| | Health Hazard | Flammability | Physical Hazard | Personal Protection |
|---|---|---|---|---|
| HMIS | 1 | 1 | 0 | -- |

Hazard rating: 0 - Minimal; 1 - Slight; 2 - Moderate; 3 - Serious; 4 - Severe
HMIS Label colored bar code: Blue - Health; Red - Flammability; Orange - Physical Hazards; White - Special

Relevant hazard statements: none
Relevant R phrases: none

**Note:**
The information provided in this material safety data sheet is based on current knowledge about the product and current legal requirements and standards. It relates specifically to health, safety and environmental requirements and standards, may not identify all hazards associated with the product or its uses or misuses, does not signify any warranty with regard to the properties of the product, and only applies when the product is used for the purposes indicated in section 1. This product is not sold as suitable for other purposes and such other usage may cause risks not mentioned in this safety data sheet.

**Issue date:** December 27, 2012
**Revision date:** December 27, 2012