ATTACHMENT 13

REVISED WASTE ANALYSIS PLAN (APPENDIX A, ATTACHMENT 1)

SEPTEMBER 2015

CHEMICAL WASTE MANAGEMENT, INC.
Sulphur, Calcasieu Parish, Louisiana

WASTE ANALYSIS PLAN

LAD000777201-OP-RN-1

AGENCY INTEREST NO. 742

Prepared By:

Providence Engineering and Environmental Group LLC
1201 Main Street
Baton Rouge, Louisiana 70802
(225) 766-7400

www.providenceeng.com

Project Number 932-004

PROVIDENCE

15 years

TALE OF CONTENTS

Section		Page
1.0	INTRODUCTION	1
2.0	ANALYTICAL RATIONALE	2
2.1	"Mandatory Analyses"	3
2.2	"Supplemental Analyses"	4
3.0	SAMPLING METHODOLOGY	7
3.1	General Methods and Equipment	7
3.2	Specific Methods and Equipment	7
3.2.1	Containerized Waste	8
3.2.2	Process Waste Stream In-Line Sampling	9
3.2.3	Waste Piles	9
4.0	PRE-ACCEPTANCE PROCEDURES	9
4.1	Waste Information	10
4.2	Initial Review and Analysis	11
4.3	Waste Management Decision Process	11
4.4	Re-Evaluation Process	11
4.5	Standard Profiles	12
5.0	INCOMING LOAD PROCEDURES	12
5.1	Manifest or Shipping Paper Review	13
5.2	Inspection and Sampling	13
5.3	Analysis	14
5.4	Exceptions	14
5.5	Decision Evaluation Logic	16
6.0	PROCESS ANALYTICAL RATIONALE	19
6.1	Storage	19
6.1.1	Waste In Containers (Drums)	20
6.1.2	Waste In Tanks	20
6.2	Treatment Operations	20
6.2.1	Stabilization	21
6.2.1.1	Solidification of Wastes Containing Free Liquids	21
6.2.1.2	Pre-Treatment and Stabilization of Land Disposal Restricted Waste	22
6.2.2	Decanting	22
6.2.3	Blending for Thermal Treatment	23
6.2.4	Treatment In Containers	24
6.2.5	Chemical Oxidation	24
6.2.6	Neutralization	25
6.2.7	Hydrolysis	25
6.2.8	Treatment of Hazardous Debris	25
6.2.9	Biotreatment	26
6.2.10	Oil Recovery and Liquids Removal	26
6.2.11	Thermal Treatment	27
6.3	Landfill Disposal	27

ED_002427B_00020824-00003

TALE OF CONTENTS (*continued*)

Section **Page**

7.0 QUALITY ASSURANCE/QUALITY CONTROL 28
7.1 Introduction 28
7.2 Sampling Program 29
7.3 Analytical Program 30
7.4 Conclusion 30

LIST OF APPENDICES

Appendix

A Analytical Procedures
B Land Disposal Restriction Sampling and Analyses
C Figures
4-1 Generator's Waste Profile Sheet
4-2 Waste Management Decision Form (Long Form)
4-3 Overview of the Pre-acceptance Process
5-1 Overview of the Incoming Load Identification Process
6-1 Storage
6-2 Stabilization
6-3 Decanting
6-4 Blending for Thermal Treatment
6-5 Chemical Oxidation
6-6 Neutralization
6-7 Hydrolysis
6-8 Landfill
6-9 Biotreatment
6-10 Oil Recovery
6-11 Thermal Desorber
D Table 3-1 Sampling Methods and Equipment

LIST OF ATTACHMENTS

Attachment

A Professional Engineer's Certification

In accordance with the regulatory requirements set forth in Section 1519 of the Louisiana Hazardous Waste Regulations (LHWR) and 40 CFR Part 264.13, Chemical Waste Management, Inc. (CWM) has developed this Waste Analysis Plan as an integral part of the Part II RCRA Permit Application for its Lake Charles Facility located near Carlyss (Calcasieu Parish), Louisiana. The procedures set forth in this plan dictate that this facility will be in compliance with all requirements of LHWR Section 1519 and 40 CFR Part 264.13. A copy of this plan will be available at the facility at all times.

1.0 INTRODUCTION

The purpose of this Waste Analysis Plan (WAP) is to identify and document the necessary sampling methodologies, analytical rationale and overall procedures that are undertaken for all wastes that enter this facility.

Specifically, the plan delineates the following:

- Analytical Parameters and Rationale - Section 2.0 outlines the parameters and rationale CWM will utilize to identify incoming waste shipments to ensure proper management of the waste at the facility.
- Sampling Methodology - Section 3.0 outlines the proper sampling method(s) for a given waste type (solid, sludge, liquid) and container (drum, tank, etc.). CWM personnel can then obtain waste identification samples to help ensure accurate analytical results when a waste is analyzed.
- Pre-Acceptance Procedures - Section 4.0 outlines the procedural steps CWM will take to evaluate the acceptability of a candidate waste stream pursuant to permit conditions and operating capabilities prior to acceptance of the waste for management at the facility.
- Incoming Load Procedures - Section 5.0 outlines the procedural steps CWM will take to identify that the waste shipment delivered to the facility matches the accompanying manifest shipping paper, and/or pre-acceptance documents.
- Process/Analytical Rationale - Section 6.0 outlines the procedural steps CWM will take in regard to each management unit at the facility.
- Quality Control Policy - Section 7.0 outlines the quality control policy this facility will follow to achieve high quality analytical results.

It is the policy of CWM, Lake Charles, that hazardous wastes handled by this facility will be subjected to these procedures. This is to help ensure that this facility will be in compliance with applicable permits and regulations.

The forms shown within this WAP are typical forms currently used by the facility. These forms may change as regulations, customer needs, operations, or company policy dictate.

For the purpose of sampling and testing, "CWM" means any CWM laboratory or subsidiary laboratory or approved contract laboratory.

CWM maintains generator-supplied and CWM-developed information. This information may be accessed electronically or via hard copy.

CWM management, personnel and/or their designees are individually and collectively herein referred to as "facility management".

Because new testing requirements, such as those promulgated under the Land Disposal Restrictions, often become effective prior to the time Waste Analysis Plan revisions can be formally made (and approved by all regulatory agencies where applicable), the facility will have in place a written protocol specifying the new testing and frequency of testing requirements prior to acceptance and/or processing of the regulated waste. The facility may also periodically revise the protocol to reflect scientific advances or additional regulatory requirements.

2.0 ANALYTICAL RATIONALE

A waste characterization is obtained by CWM on a Waste Profile Sheet (WPS) or document acceptable to CWM designed to provide all the information required by LHWR 1519.A.1. [as outlined in LHWR 1519.A.2] and 40 CFR Part 264.13(a)(1) [as outlined in 40 CFR 264.13(a)(2) and comment].

Analyses are performed to ensure that the waste material matches the overall identity of the waste designated on the accompanying manifest (or shipping paper) and the pre-acceptance paperwork. The analyses will also help to ensure that the appropriate treatment and storage techniques can be utilized.

Analytical procedures utilized by CWM are classified into two basic categories:

- "Mandatory Analyses" - are performed on incoming load samples, except for certain wastes as identified herein.
- "Supplemental Analyses" - are performed as directed by facility management to augment existing information on the waste.

This tiered approach provides CWM with sufficient information to properly manage a given waste stream.

Procedures utilized for the "Mandatory Analyses" and "Supplemental Analyses" consist of accepted standard methods and CWM developed procedures. These are described or referenced in Appendix WAP-A. The analytical procedures given in this text (whether standard or developed by CWM through its operating experience) have been chosen for their ability to provide the information required to properly manage a waste. The Facility Management may waive specific "Mandatory or Supplemental Analyses" if performing the analysis presents a safety hazard in the lab (e.g., PCB extraction on an oxidizing waste).

A summary of the analytical parameters within each category and their usage is provided in this section. Analyses are not necessarily repeated for sequential

activities or movement of the same waste within the facility unless required by changes in the waste's identity, as determined by facility management.

2.1 "Mandatory Analyses"

The "Mandatory Analyses" include screening procedures that are performed to provide a general identification of the waste. The results of these analyses in conjunction with the WPS are used to determine the type of storage, treatment and disposal that is most suitable for that particular waste. These analyses are performed on wastes, except on the occasions when a test is deemed inappropriate by facility management Excepted waste categories are discussed in Section 5.4.

The parameters which constitute the "Mandatory Analyses" and the rationale for performing them are as follows:

1. Cyanides Screening is performed to determine whether the waste produces hydrogen cyanide upon acidification below pH 1. It is not required if the pH of the waste is less than 6.0, if the waste is not water soluble, or if the waste is not aqueous.
2. Ignitability (Flammability Potential) Screening is performed to indicate the ignition potential of the waste. This testing can be applied to all waste liquids, semi-solids, or solids, but need not be applied if other information indicates the waste is not ignitable.
3. pH Screening is performed to indicate the pH range and the general corrosive nature of the waste. pH screening may not apply to certain types of wastes, e.g., organic solvent waste, oil waste, or insoluble solid waste.
4. Physical Description Screening is used to determine the general physical properties of the waste. This facilitates subjective comparison of the sampled waste with prior waste descriptions or samples. It is also used to identify the presence or absence of observable free liquids, and any obvious changes in the waste's physical properties.
5. Sulfides Screening is performed to determine whether the waste produces hydrogen sulfide upon acidification below pH 2. It is not required if the pH of the waste is less than 6.0, if the waste is not water soluble, or if the waste is not aqueous.
6. Water Compatibility Screening is performed to determine whether the waste has a potential to vigorously react with water to form gases or other products, or whether it generates significant heat. This testing does not apply to wastes that are already in contact with excess water, or for which sufficient analytical data and/or information exist regarding reactivity with water.
7. Radiation Screening is performed to determine if radioactive materials are present in the waste. If radioactive materials are detected, then applicable Federal and State regulations will be

reviewed to ensure management of the waste is in compliance with those regulations and the Facility Permit.

Analytical method references for performing these screening methods are detailed in the Screening Methods Parameter section of Part II of Appendix WAP-A.

2.2 "Supplemental Analyses"

"Supplemental Analyses" are performed to further identify wastes as appropriate. The results of these analyses provide the facility management with another level of confidence concerning the appropriate means of treatment, storage and disposal. These additional parameters either utilize procedures and protocol formulated by CWM, which have been developed for general waste identification or in the absence of standard analytical procedures, or are standard analytical procedures recognized by the USEPA and ASTM or other recognized sources (e.g., AOAC). Appendix WAP-A identifies the methods which may be used to perform these parameters.

The parameters which constitute the Supplemental Analyses and the rationale for performing them is described below. Other parameters not listed here may be added as required by changes in regulations, company policy, etc., or as needed.

- Anion Analysis is used to determine the concentration of anions such as chlorine, fluoride, etc.
- Ash Content Analysis is used to estimate particulate generation, and inorganic solid residue for incineration system control.
- Bench Scale Treatment Evaluation is used to determine the appropriate ratio of waste:reagent or waste:waste for optimum treatment.
- Chlorine Content Analyses determines the suitability of an organic waste to be used as a fuel.
- Compatibility Testing (Commingled Waste Compatibility Screen) is used to determine whether liquid wastes to be commingled are compatible.
- Cyanides - Total and Amenable (Sodium Hypochlorite or Direct Chlorination) is used to determine the effectiveness of hypochlorite for cyanide treatment.
- Cyanides - Detoxification is used to determine the effectiveness of reagent treatment on cyanides.
- Filterable Residue (Total Suspended Solids) quantifies the suspended solids present to determine filtration requirements in process operations.
- Flash Point further characterizes ignitable wastes.

- Free Cyanides is used to determine the amount of free cyanide in the waste.
- Free Liquids Testing (Paint Filter Test Screen) to determine if a solid or semi-solid waste contains free liquids.
- GC/MS Methodsare used to separate and identify organic compounds.
- Gas Chromatography Methods are used to separate and identify organic compounds.
- Halogen Content Analyses is used to estimate the potential of halogen gas generation during incineration or use as a fuel.
- Heat Value assesses the amounts of heat released during thermal combustion.
- Heavy Metals (Ag, As, Ba, Be, Cd, Cr, Pb, Hg, Ni, Sb, Se, Tl, V) are run to quantify heavy metal concentrations to determine process operating parameters.
- Hexavalent Chromium is to quantify the concentration of this species for treatment control.
- Load Bearing Strength is a preplacement test used to estimate the shear strength of the compacted waste.
- Microwave aided Digestion may be performed to prepare samples for metals analyses.
- Miscellaneous Metals (Cu, Sb, Be, Ni, Zn) is used to determine potential salt precipitation and is used for monitoring certain processes.
- Non-Filterable Residue (Dissolved Solids) quantifies the dissolved solids present.
- Oxidizer Screening is utilized to determine the presence of oxidizers.
- PCB GC Methods are run to indicate whether PCBs are present in oil-bearing wastes and to ascertain their concentration.
- PCBs Screening is used to determine whether or not PCBs are present in a waste.
- pH Measurement provides a more precise measurement of pH and an indication of corrosivity when determining process parameters.
- Percent Acidity determines the acidity in the waste. It is only used if the waste is below a pH of 7.
- Percent Alkalinity determines the amount of alkalinity in the waste.
- Percent Halogens Screening determines the amount of halogens in a waste.
- Percent Organics is used to determine the relative percent of xylene soluble organics, solids and water in a waste material.
- Percent Solids is used to determine the amount of solids in a liquid sample.

- Percent Solids by Centrifuge determines the percentage of suspended solids by centrifugation.
- Peroxide Screen is used to determine the presence of organic peroxides.
- Phenols (Phenolic Organic Method) quantifies the concentration of phenols.
- Phenol Screening is used to determine the amount of phenol in a waste.
- Potassium Permanganate Screen is used to determine if liquids are aqueous or organic.
- Quick Leach Extraction is used as a rapid extraction procedure to qualitatively duplicate metals leachability.
- Radioactive Gamma Spectrum Analysis is used to identify isotope species and concentrations in pCi/g.
- Reactive Sulfides is used to determine the amount of reactive free sulfide in the waste.
- Soluble Sulfides are analyzed to provide quantitative backup to the sulfides screen.
- Solvent Screening determines whether a waste contains halogenated and/or non-halogenated organic constituents.
- Specific Gravity indicates density of the waste (e.g., to determine suitability for storage in designated tanks).
- Stabilization Evaluation is run to determine whether the waste is amenable to stabilization, and to determine the ratio of stabilization reagent-to-waste required to affect stabilization.
- Sulfate Screening indicates the presence of sulfate.
- Sulfides - Detoxification is used to determine the effectiveness of reagent treatment on sulfides.
- Sulfur Content Analyses determine the sulfur content of waste to be incinerated and thus its capability to generate SO_2 (SO_x) gases.
- Total Cyanides (Distillation with Magnesium Chloride quantifies the concentration of all free and complexed cyanides.
- Total Residue (Total Solids) quantifies the suspended and dissolved solids present and moisture content for selected processes.
- Toxicity Characteristic Leaching Procedure determines whether a waste or a treated waste residue contains levels of restricted constituents above appropriate treatment standards.
- Total Sulfides is used to quantify the concentration of total sulfide.
- Viscosity determines the waste pumpability.
- Water Content is used to determine the water amount or percent water in liquid, solid or semi-solid samples.

- Weak Acid Dissociable (Reactive) Cyanides measures the cyanides that would be potentially reactive under acid conditions.

3.0 SAMPLING METHODOLOGY

Sampling is performed by CWM to identify waste shipments and by (or as directed by) the generator to make the initial waste determination. Selection of sampling methods are dependent on both the nature of the material and the type of container.This section presents sampling methodologies to be utilized by CWM personnel.

When a shipment arrives at the facility for management, a determination has previously been made that the waste is either:

1. a characteristic waste as defined in Section 4903 of the LHWR and 40 CFR Part 261 Subpart C;
2. a listed hazardous waste as defined in Section 4901 of the LHWR and 40 CFR Part 261 Subpart D; or
3. a waste material which is not a hazardous waste as defined in Section 105 of the LHWR and 40 CFR Part 261.4(b).

This initial waste determination provides CWM with information concerning both the distribution and nature of the waste components prior to its arrival at the facility. The purpose of the inspection, sampling, analysis and review of pre-acceptance paperwork when a waste material arrives at the facility is to ensure that the shipped waste is consistent with the overall identity of the waste designated on the accompanying manifest (or shipping paper) and the pre-acceptance paperwork. Therefore, as described in SW-846, a sampling approach that is less comprehensive than that used by a generator to make his initial waste determination is appropriate (e.g., vertical compositing).

3.1 General Methods and Equipment

As practicable, the sampling techniques used for specific types of waste correspond to those referenced in 40 CFR 261, Appendix I and presented on Table 3-1 of this document (see Appendix WAP-D).
The sampling equipment and procedures described in this WAP represent the facility's recommended sampling protocol for general types of waste material and waste containers. Specific waste materials or shipments may require different sampling techniques. Therefore, deviations from the recommended protocol do not constitute an excursion from acceptable sampling practices or the conditions of this WAP.

3.2 Specific Methods and Equipment

In addition to ASTM and EPA sampling procedures, CWM has instituted specific methodologies for taking samples from various containers. The

container may be transportable such as drums, portable transport units (e.g., tanks, roll-off boxes) and tanker or dump trucks; or stationary, such as tanks, and in-process sources. The sampling devices are selected depending on the size and type of container and on the specific material involved.

Access to any type of container will influence the location within the container from which samples can be taken Where possible, samples will be taken to address vertical variations in the waste because there is a much greater tendency for wastes to be heterogeneous in a vertical rather than a horizontal direction and horizontal variations are generally easier to detect. If examination indicates significant strata which would cause non-conformance in a waste, then each layer may be analyzed separately.

3.2.1 Containerized Waste

A container is any portable device in which a material is stored, transported, treated, disposed of, or otherwise handled. Vertical compositing of the waste will yield an appropriate sample in most cases. A single vertical axis sample will be taken where possible (i.e., tanks where depth allows for the use of a Coliwasa). Where a single vertical axis sample is not possible , alternate sampling equipment appropriate for the waste matrix will be utilized to obtain the best vertical representation of the waste. These samples will be composited in equal volume. If examination indicates significant strata which would cause non-conformance in a waste, then each layer may be analyzed separately.

Sampling of small containers (e.g., drums, cartons, and other small units) varies with the nature of the waste material. For flowable materials, the sampling device of choice is either a Coliwasa unit or open tube sampler tubing to draw a full vertical section. For non-flowable wastes, an open tube sampler, trier, scoop, thief or shovel is used to obtain a sample.

Large containers and tanks for flowable materials and bulk containers for solid materials may be either stationary or mobile. Liquids are sampled with a Coliwasa or an open tube sampler to obtain a vertical section, or by weighted bottle or bomb sampler to allow for sampling at various depths. Light, dry powders, granules and heavy solids are sampled by trier, shovel, scoop, or by coring with heavy tubing.

Tanks may be equipped with sample taps in a vertical plane. A composite sample is obtained by taking equal volumes from each port (or tap) and mixed in a common sample container. Tank sediments may be sampled from the bottom sampling port when not readily sampled from above.

When the information on a waste or the appearance of the waste leads to the suspicion there may be significant horizontal variation which would cause non-conformance in a waste load, provided access allows, multiple vertical sections are sampled to represent variations in the horizontal dimension. Sampling across the horizontal dimension may be limited to access ports or to sampling during unloading.

3.2.2 Process Waste Stream In-Line Sampling

The variability of the waste stream at any point in a treatment process is first determined from knowledge of the process producing the stream, or from the results of a preliminary investigation of the waste stream. Sampling frequency is based upon the waste stream's variability. The sampling procedures consist of obtaining individual samples from appropriate in-line sampling points in the process stream for analysis. The sample can be varied in size depending on the flow rate of the stream.

3.2.3 Waste Piles

Waste accessibility, frequently a function of pile size, is a key factor in the sampling strategy for a waste pile. Piles are sampled by multiple vertical sections using triers, tubing, shovels or similar devices. Large piles may be sampled with heavy tubing, soil augers or through the use of excavation equipment such as a backhoe.

In cases where size impedes access to the center or bottom of a waste pile, a set of samples that is generally representative of the entire pile can be obtained by scheduling sampling to coincide with pile placement or removal.

4.0 PRE-ACCEPTANCE PROCEDURES

CWM has developed a series of control procedures to determine the acceptability of specific wastes for management at the facility. These control procedures are referred to as pre-acceptance procedures. The pre-acceptance procedures dictate what information CWM must obtain in order to determine the acceptability of the waste for storage/transfer, treatment, or disposal. At a minimum, CWM will obtain the information required by 40 CFR Part 264.13(a)(1) [as outlined in 40 CFR 264.13(a)(2) and comment] and LHWR 1519.A.1. [as outlined in LHWR 1519.A.2] necessary to treat, store or dispose of the waste. Standard Profiles may be developed for use as part of the pre-acceptance process (see Section 4.5).

The pre-acceptance procedures provide the mechanism for deciding to accept a particular type of waste, based on the conditions or limitations of existing permits, and its compatibility with other wastes being stored at the facility. The pre-acceptance procedures for this facility may be carried out at this facility, another

CWM facility, or upon receipt of the load prior to its acceptance. The pre-acceptance procedures include the following steps:

- CWM obtains information in order to make a decision regarding the possible management of a candidate waste stream.
- The initial review of the information and, if necessary, analysis of a requested sample allows CWM to conduct an initial evaluation for management capabilities at the facility.
- The waste management decision process is the process of documenting the acceptance or rejection of the candidate waste stream.
- Re-evaluation process identifies when a waste stream will be re-evaluated once it has been accepted.

4.1 Waste Information

CWM will obtain the following information and materials for each new candidate waste stream.

- Generator's Waste Profile Sheet, (WPS), (typical form shown as Figure 4-1 (Short Form) or Figure 4-2 (Long Form) in Appendix WAP-C), or equivalent, which will contain pertinent chemical and physical data. At a minimum, the information required by Section 1519.A.1. [as outlined in LHWR 1519.A.2] and 40 CFR Part 264.13(a)(1) [as outlined in 40 CFR 264.13(a)(2) and comment] needed to characterize the waste for appropriate treatment, storage or disposal will be obtained.
- A sample consistent with the waste to be managed, when required. A sample may not be required by CWM if facility management determines that the pre-acceptance documentation gives sufficient information to maintain compliance with permit and operational constraints and that submittal of a sample would not aid in the waste management decision process. In addition, a sample is not needed if handling or obtaining a sample poses an unnecessary hazard of acute or chronic exposure of CWM employees to materials such as carcinogens or if attempting to obtain a representative sample is not practical, i.e., concrete, brick, trash, lumber, insulation, etc. Where management determines a sample is necessary, this sample may be obtained by CWM upon receipt of the initial shipment of the waste prior to acceptance for management. Documentation of this process will be maintained in the generator's profile acceptance records.
- Land Disposal Restriction Notification/Certification Information and/or Data (40 CFR Part 268.7 and LHWR Chapter 22 Subchapter A).
- Other supporting documentation such as a material safety data sheet (MSDS), product ingredients documentation of Generator's Process Knowledge, etc.

4.2 Initial Review and Analysis

CWM will review the information on the waste. If it is determined that a sample of the waste is necessary upon receipt of the initial shipment of the waste prior to acceptance for management, it will be subjected to the "Mandatory Analyses" (Section 2.1). Facility management will then review all the information and make a determination if "Supplemental Analyses" (Section 2.2) are required.

If, during this procedure, facility management determines that the waste information indicated by the analyses does not generally conform to the information on the WPS, the generator is notified of the apparent inconsistency. If the inconsistency is resolved, the pre-acceptance procedure continues.

4.3 Waste Management Decision Process

The pre-acceptance procedure is concluded when the review of the information obtained and any necessary analyses are complete. At this time, facility management documents the decision regarding the acceptability of the waste and the proposed method of management. This decision is embodied within a waste management decision. Factors on which these decisions are based may include:

- Methods available to manage the waste
- Conditions or limitations of existing permits and regulations
- Capability to safely manage the waste
- WPS description of the process generating the waste
- Knowledge of the waste generating process
- WPS description of the chemical and physical properties of the waste
- Any additional documentation supplied, such as information that the waste is subject to the land disposal restrictions and certification made by the generator
- Results of "Mandatory Analyses" as appropriate
- Results of "Supplemental Analyses" as appropriate
- Experience and technical judgment.

Figure 4-3 shows an overview of the pre-acceptance procedures.

4.4 Re-Evaluation Process

In accordance with 40 CFR 264.13, a waste profile re-evaluation will be conducted when one of the following occurs:

- A generator notifies CWM that the process generating the waste has changed; or
- Facility management decides the waste received does not match the waste designated on the shipping papers (See Section 5.5, number 3)

When this occurs, CWM will review the available information. If existing analytical is not sufficient, the generator may be asked to review the current waste profile, to supply a new profile, and/or to submit a sample for analysis, or CWM may obtain a sample from a load of the waste.

At a minimum, CWM re-evaluates the profile information every two years after the initial approval is authorized to confirm the waste or waste-generating process has not changed.

4.5 Standard Profiles

Standard Profiles may be used for waste streams which are similar in physical and chemical characteristics, or generated by similar industries or processes. This approach is consistent with the USEPA's approach of assigning a listed waste code to similar process wastes.

Waste streams, which upon review are identified as conforming to an existing approved Standard Profile, may be managed under the existing waste management decision, specific for that Standard Profile.

5.0 INCOMING LOAD PROCEDURES

The incoming load procedures allow CWM to determine that a waste to be managed matches the identity specified on the accompanying manifest and/or the pre-acceptance paperwork and to ensure the proper management method. This is accomplished through the following procedural steps:

- Manifest or shipping paper review
- Inspection and sampling
- Analysis
- Decision evaluation logic

In addition, all wastes which are subject to the Land Disposal Restrictions of 40 CFR Part 268 and LHWR Chapter 22 and have been treated, exempted, varianced or meet the appropriate treatment standard or prohibitions without treatment must be accompanied by a form from the generator or treater, certifying or notifying, as appropriate, that the treated, exempted or varianced waste meets the appropriate treatment standard or prohibition (or the untreated waste naturally meets the treatment standard or prohibition) and includes the analytical data or reference to such data or documentation to support the certification in accordance with 40 CFR Part 268 and LHWR Chapter 22. Furthermore, all wastes which are subject to the Land Disposal Restrictions of 40 CFR Part 268 and LHWR Chapter 22 and require

treatment must be accompanied by a form from the generator, notifying the treater of the treatment standard and/or all applicable prohibitions which must be met and include any applicable analytical data or reference to such data or documentation in accordance with 40 CFR Part 268 and LHWR Chapter 22.

For containerized waste intended for landfilling where the generator (or treater) has previously identified (see Section 4.1) that sorbents have been added to the waste to sorb free liquids, a determination will be made, prior to disposal, that a determination has been received from the generator (or treater) that no biodegradable sorbents [as described in 40 CFR Part 264.314(e)] are included in the waste in accordance with 40 CFR Part 264.13(c)(3).

5.1 Manifest or Shipping Paper Review

The manifest or shipping paper is reviewed, and as required by LHWR, the generator or transporter will be contacted concerning significant discrepancies (See Section 5.5, Number 3) discovered at this time. The generator or transporter will be asked to provide the information necessary to correct the manifest. If the generator or transporter cannot be reached and the information is needed to safely and effectively manage the waste, the load will be held until the manifest has been corrected.

Upon arrival at a CWM facility, bulk loads normally will be weighed (gross weight) as a first step to confirm manifest quantity and weighed again (tare weight) when exiting the facility. Off-site certified weights may be accepted in lieu of weights obtained on-site. Waste shipments received in drums will be subjected to a piece count during inspection.

5.2 Inspection and Sampling

Waste shipments will be inspected and sampled in accordance with Section 3. Wastes exempted from pre-acceptance sampling, as noted in Section 4.1 may also be exempted from incoming load sampling, as noted in Section 5.4. These materials may be subject to a visual inspection when received. Waste will be sampled in accordance with the following guidance.

All loads will be subject to a visual inspection, except where noted herein. The visual inspection may be conducted by CWM personnel or their designee prior to shipment of the waste. Bulk loads which cannot be visually inspected will be unloaded and inspected inside the landfill. When unanticipated liquids are found to be present in the load, the liquids will be removed by excavation and stabilized by adding kiln dust or other appropriate materials. All bulk waste shipments should be sampled and analyzed except as noted in Section 5.4. These loads may be subject to visual inspection. For cases in which large volumes of a single waste stream are received from a single generator or source (e.g., a major site or pond remediation project or routinely received consistent process waste), at least 10 percent of the loads from such waste streams will be sampled and analyzed on a daily basis

based on a 24-hour period. This procedure may be varied, under certain circumstances, to allow sampling of lagoons, impoundments, remedial cleanups, or waste piles. This variance will be on a job-specific basis and documentation of the sampling and analysis plan will be detailed with the waste profile sheet.

In the case of drums or portable tanks, at least 10 percent of the containers from each waste stream will be selected for sampling except as noted in Section 5.4. If upon inspection, free liquids are observed in any of the containers destined for land disposal, all the remaining containers from that waste stream will be inspected. Container samples (on a "per phase" basis) may be composited for testing as long as each sample is compatible.

5.3 Analysis

Samples will generally be analyzed in accordance with Sections 2 and 6 of this text. At a minimum, samples will be subjected to the appropriate "Mandatory Analyses" (Section 2.1). (Wastes exempted from "Mandatory Analyses" are noted in Section 5.4). "Supplemental Analyses" (Section 2.2) will be performed as directed by facility management and as specified in Section 6. Other CWM personnel or their designee can provide the incoming waste shipment "Mandatory" and/or "Supplemental Analyses" required in Section 2.1 and 2.2 as well as any required visual inspection, prior to or in conjunction with the arrival of the shipment on-site.

Further testing may be required if the results of the "Mandatory Analyses" indicate unexpected information with respect to the manifest (or shipping paper) or pre-acceptance information, or if facility management has reason to suspect that the waste composition has changed. CWM practices will conform with the quality control policy described in Section 7.0.

5.4 Exceptions

The following wastes or waste categories are not sampled and analyzed upon receipt but may be subject to a visual inspection.

1. Lab Packs. This is limited to discarded containers of chemicals, equipment, clothing, debris from spills or cleanup and floor sweepings. Prior to acceptance of lab packs, CWM requires its customers to submit a pre-acceptance form listing the proposed contents of each lab pack for review and approval. In addition, the generator will document in the form of a letter that he has packed the lab pack to meet all applicable regulations (section 2519 of the LHWR) if material is to be landfilled. CWM personnel review this information and determine if all materials can be accepted by the facility. Next, a compatibility determination is accomplished. If CWM determines that a material is not acceptable or compatible

CWM will notify the generator. The lab pack will be accepted when it conforms to the CWM criteria for lab packs.

2. "Empty" containers of waste materials, commercial products or chemicals.
3. Asbestos-containing waste from building demolition or cleaning or remediation.
4. Discarded, off-specification, unused, or outdated commercial products.
5. Residues and debris. This consists of residue and debris from cleanup of spills or releases of a single chemical substance or commercial product or a single waste which would otherwise qualify as a special waste.
6. Waste from a medical practitioner, hospital, medical clinic, nursing home, medical testing laboratory, mortuary, taxidermist, veterinarian, veterinary hospital, or animal testing laboratory.
7. Animal waste and parts from slaughterhouses or rendering plants.
8. Waste produced by the mechanical processing of fruit, vegetables, or grain.
9. Pumpings from septic tanks used exclusively by dwelling units.
10. Sewage treatment plant sludge.
11. Grease trap wastes.
12. Washwater wastes from commercial car washes.
13. Washwater wastes from commercial laundries or laundromats.
14. Chemical-containing equipment removed from service. Examples include cathode ray tubes, batteries, fluorescent light tubes, etc.
15. Demolition wastes. This consists of waste produced from the demolition or dismantling of industrial process equipment or facilities contaminated with chemicals from the process.
16. Site-generated waste (including this and other CWM and CWM subsidiary facilities). Wastes generated on-site can generally be characterized adequately by knowledge of the process generating or source of the waste.
17. Non-Hazardous Industrial Waste.
18. Controlled substances regulated by the Federal Government including illegal drugs and/or materials from clandestine labs.
19. Materials designated for storage and subsequent transshipment off-site. These materials are received at the facility for storage and subsequent transshipment only and are not processed. If it is determined that the facility will process a waste previously designated for storage and subsequent transshipment, the waste will be sampled and analyzed accordingly, prior to any treatment activities.

20. Waste from a remedial project in which the sampling and analysis plan was approved by a federal or state agency (e.g., CERCLA or Potentially Responsible Party type project).
21. Debris as defined at 40 CFR 268.2.

In addition to these exceptions, facility management may waive the incoming waste load sampling and analysis where the pre-acceptance information is sufficient to assure compliance with permit conditions and operational constraints of the treatment process; and any one of the following conditions exist:

- Obtaining a sample poses an unnecessary hazard of acute or chronic exposure of CWM employees to carcinogenic, mutagenic, neoplastigenic, teratogenic, or sensitizing materials; or
- The material may react violently with air or moisture; or
- The material's odor poses a public nuisance when sampled; or
- A sample cannot be reasonably obtained, such as filter cartridges, large pieces of contaminated material, or contaminated debris.

Management of the wastes specified above is to be based only on the WPS description of the waste and any necessary supporting documentation or information. All the information required by LHWR section 1519.A.1 [as outlined in LHWR 1519.A.2] and 40 CFR Part 264.13(a)(1) [as outlined in 40 CFR 264.13(a)(2) and comment] necessary to evaluate, treat, store, or dispose of the waste will be available. This will enable CWM to properly manage the waste without sampling and analysis.

The sampling and analysis of the wastes specified above is not required, unless specifically requested by the facility management. These materials are not sampled because they present extraordinary health and safety hazards (e.g., asbestos), exhibit unusual or impractical sampling and analytical complication (e.g., labpacks) and/or are of such a nature that their contents are known in sufficient and reliable chemical and physical detail that sampling and analysis is not warranted; for example, outdated commercial products.

5.5 Decision Evaluation Logic

An overview of the process utilized by facility management in deciding whether to accept or reject a particular waste load is depicted in Figure 5-1. The specific major decision points are: (1) the need for additional analyses, (2) the waste identification, (3) an evaluation of whether a waste is found to be in conformance or nonconformance, and (4) an evaluation of whether wastes found to be in nonconformance can be accepted or should be rejected.

1. The need for additional analyses
   Facility management decides whether additional analyses for a particular waste may be required based on one or more of the following:

   - Results of "Mandatory Analyses"
   - Knowledge of generator and/or waste-generating process
   - Results of pre-acceptance evaluation
   - Knowledge of the limitations of the targeted waste management units
   - Experience of facility management determining the need to know more information

   Further testing may be required if the results indicate unexpected properties with respect to pre-acceptance information, or if facility management has reason to suspect that the waste composition or process generating the waste has changed.

2. The waste identification
   The effectiveness of the waste identification step is dependent on one or more of the following components:

   - Inspections
   - Sampling
   - Analytical results
   - Waste profile sheet and supporting documentation
   - Waste manifest
   - Land Disposal Restricted (LDR) waste notification and certification, where appropriate (see Section 5.0)
   - Pre-acceptance analytical results
   - Facility management's judgment
   - Any additional documentation supplied by the generator such as MSDS, product ingredients, etc.

3. An evaluation of whether a waste is found to be in conformance or nonconformance.
   CWM uses four major criteria to determine the existence of an inconsistency among the WPS, the manifest or shipping paper, and the incoming waste load screening analysis. They are:

   - For bulk wastes, variations greater than 10 percent in weight (Section 907 of the LHWR)
   - For batch wastes (e.g., drums, bags etc.) any variation in piece count (Section 907 of the LHWR)

- If inspection or analysis of any waste reveal obvious differences such as waste solvent substituted for waste acid or toxic constituents not reported on the manifest or shipping paper (Section 907 of the LHWR)
- Changes that effect the originally approved method of management.

A nonconformance that does not fall within these criteria is considered to be "minor" and is not subject to a re-evaluation review unless CWM has reason to believe that the variation is a continuing deviation and that a particular waste stream indeed is different from its documented values. Significant inconsistencies in waste type, as defined by the last two criteria above, result in recharacterization only if the inconsistency cannot be reconciled with the generator or CWM has reason to believe that the waste composition has changed. The detection of a waste constituent that was not recorded on the WPS or manifest does not necessarily trigger a re-evaluation of the waste stream if the inconsistency can be justified by the generator, and is not a continuing variation.

(4) <u>An evaluation of whether wastes found to be in nonconformance can be accepted or should be rejected.</u>
Wastes found to be in nonconformance as defined by the four criteria above may be rejected, or they may be re-evaluated for possible acceptance at the facility despite the variance. This procedure is intended to prevent the unnecessary movement of a waste material back and forth between the facility and the generator in cases where the material can be readily handled by the facility. By eliminating this unnecessary movement, CWM is attempting to reduce further possible exposure to human health or the environment from the waste. The re-evaluation procedures are designed to determine whether a waste material, in its form as identified by CWM (i.e., inconsistent with WPS and/or manifest data), can be handled by the facility, and whether the generator concurs with the CWM identification. The re-evaluation will be based on the same criteria listed in section 4.3 and:

- Discussions with and/or information from the generator (as per Section 907 of the LHWR)
- Current facility conditions for management

If all of the above criteria and results of the "Supplemental Analyses," if any, indicate the waste can be accepted and the generator concurs, an amended or new waste management decision is prepared by the facility management if the non-conformance will be a continuing variation and the method of management has changed. If any of the above criteria or analytical results indicate that the waste cannot be accepted at this facility, the waste is rejected.

The final decision to reject all or part of a waste shipment is made by facility management. Decisions are made as soon as the facility has considered all of the applicable information listed above. The facility strives to complete these decisions as early as practicable, but circumstances which prevent sampling (e.g., extreme weather conditions) can cause delays in obtaining the information necessary to make an informed decision on the acceptability of the waste. Under such circumstances, the facility will take appropriate action to facilitate the decision process.

6.0 PROCESS ANALYTICAL RATIONALE

Each movement of a waste within the facility during which any change in its characteristics may occur, makes it subject to additional inspection, sampling and analysis to determine appropriate handling and management of the waste. Many of the analyses needed for waste management functions are performed during incoming load identification. These are not repeated unless it is known or believed that the waste characteristics may have changed during storage or processing and facility management determines there is a need to verify the changes.

Existing and anticipated process operations at the facility, for which current and periodic sampling and analyses are important, include but are not limited to the following:

- Storage;
- Treatment, consisting of stabilization/ solidification, biotreatment, decanting, blending for thermal treatment, waste water treatment, aqueous waste treatment, thermal treatment, oil recovery; and
- Landfill Disposal.

The rationale for each of these processes is described separately below.

6.1 Storage

Stored containerized liquid and solid wastes are segregated with respect to compatibility. Before any wastes are placed in any bulk storage tank, the compatibility of the waste with the storage unit materials of construction and with wastes already stored therein will be evaluated based on technical judgment and/or laboratory testing. If there is any suspicion of incompatibility, supplemental compatibility testing will be performed. The "Mandatory Analyses" performed on incoming loads of bulk and containerized liquid and solid wastes are those appropriate to the final targeted waste management units for those wastes.

6.1.1 Waste In Containers (Drums)

Stored containerized wastes are segregated with respect to compatibility based on the information obtained by CWM. Waste materials are kept separate from incompatible materials by storage in separated containment areas within the drum storage unit. Figure 6-1 describes the sequence of analyses for storage in containers.

6.1.2 Waste In Tanks

Liquid wastes targeted for storage in tanks will undergo analyses in addition to a compatibility evaluation. Prior to transferring any wastes into a storage tank, the compatibility will be evaluated based on technical judgment and/or laboratory testing. The factors that will be used, as appropriate, to determine compatibility are as follows:

Stratification -- The general miscibility of the materials will be examined. If stratification would appear to create a problem, the materials will not be combined.

Heat Generation -- Materials that, upon mixing, generate large amounts of heat or undergo strongly exothermic reactions that would appear to create a problem, will not be combined.

Gas Evolution -- Materials that upon mixing liberate flammable, explosive or toxic vapors, fumes or mists in quantities of concern, will not be combined.

Tank Compatibility - Materials that will excessively corrode the tank materials or compromise the integrity of the tank will not be placed in it.

For each waste stream to be transferred into a tank, the compatibility criteria listed above will be evaluated. If the evaluation indicates potential incompatibility, the wasteshould not be combined. Figure 6-1 also presents a schematic description of the analytical sequence for wastes stored in tanks.

6.2 Treatment Operations

The appropriate and complete treatment of a particular waste depends upon appropriate sampling and analyses during selected phases of the operation. The treatment sampling/analysis program may be divided into three segments, each with a specific purpose.

- Pre-treatment Analyses confirm that the waste falls within the selected process design parameters and allow the fine tuning of the process operational conditions. These analyses include pre-acceptance,

incoming load and any other pre-treatment Supplemental Analyses as described for each treatment operation in this section.

- In-process Analyses are performed to control the process and to monitor progress; and
- Post-treatment Analyses confirm that treatment was successful and that the characteristics of the process effluents are such that it can be sent to the next step (discharge, disposal, or further treatment) based upon permit or process constraints. Residue(s) resulting from on-site treatment of Land Disposal Restricted wastes will be analyzed and/or evaluated, as needed, against the appropriate treatment standard or applicable prohibitions. The residues (or wastes) from the treatment of Land Disposal Restricted wastes that are sent off-site for further treatment or disposal will have any appropriate notification/certification forms (in accordance with 40 CFR Part 268 and LHWR Chapter 22).

These segments are discussed below for each of the treatment processes.

6.2.1 Stabilization

In the stabilization treatment unit, several treatment steps may occur including oxidation, reduction or other chemical treatment during stabilization. This process causes a chemical reaction, producing a treated mixture suitable for land disposal. Stabilization is also used to treat (i.e., deactivate, immobilize or reduce the toxicity of) certain wastes that are Land Disposal Restricted. In some instances, a pre-treatment step, using other reagents (i.e., oxidizing and reducing agents, etc.) may be required for certain LDR wastes prior to stabilization. Stabilization is also used to solidify wastes to remove free liquid by mixing the waste with a stabilizing agent until no free liquids are present. The general approach, shown in Figure 6-2, is implemented for each batch treatment.

6.2.1.1 Solidification of Wastes Containing Free Liquids

In this process, wastes that are not land disposal restricted are treated solely to solidify free liquids. Pre-treatment analyses for these wastes consist of the mandatory analyses performed on incoming shipments. In addition, "Supplemental Analyses" may be requested by facility management to further evaluate the suitability of the waste for stabilization. After acceptance, the waste shipment will be placed into storage or sent to the stabilization treatment unit. At the stabilization unit the appropriate stabilization reagent will be mixed with the waste in order to solidify the free liquids. In process analysis is generally not required. Post-treatment analyses consist of the paint filter test, conducted as necessary, to ensure no free liquids are present. In addition, "Supplemental Analyses" may be requested by facility

management to further evaluate the suitability of the solidified waste for landfill disposal. There are no in-process analyses.

Furthermore, on occasion, a waste shipment of an ordinarily solid material may arrive containing a minimal amount of free liquids. These waste shipments may be handled in the following manner: treat to stabilize or solidify free liquids prior to land disposal; the free liquids may be physically removed prior to land disposal of the solids; or they may be rejected.

6.2.1.2 Pre-Treatment and Stabilization of Land Disposal Restricted Waste

In this process, certain LDR wastes are treated to meet the appropriate LDR treatment standard or prohibition. For the purposes of this discussion, treatment will include, at a minimum, stabilization of the waste and, in some instances, will include one or more treatment steps using agents such as oxidizing or reducing reagents prior to stabilization.

The pre-treatment analyses for LDR waste to be treated to meet a particular treatment standard or prohibition, consist of the Mandatory Analyses performed on the incoming waste shipment and if necessary, "Supplemental Analyses". In addition, a sample of the waste may be treated in the Lab and then analyzed, using the appropriate test method (e.g., TCLP, etc.) to demonstrate that the LDR waste can be treated to meet the appropriate standard or prohibition. In lieu of conducting pre-treatment analyses, technical knowledge and knowledge of the process generating the waste may be utilized to determine a waste-to-reagent ratio treatment in the field, however post treatment analysis to demonstrate compliance with LDR is required. The bench-scale treatment and/or the field treatment may be used to establish the treatment guidelines to treat each waste shipment.

The treatment guidelines, established through the above procedures, will be used to treat each shipment of that LDR waste. A post-treatment analysis is conducted as needed to assure that the process continues to be effective in meeting the treatment standards. The current post-treatment analysis protocol specifically addresses processes, frequency of analyses and corrective action.

6.2.2 Decanting

In this process, pumpable liquids are decanted from drums (or other small containers) or tanks (or tankers) into other drums, tanks or tankers where they may be separated into immiscible fractions and segregated prior to processing.

The analyses performed on wastes to be decanted include those appropriate to the ultimate target unit for the waste and compatibility evaluation. Incoming loads of these wastes undergo the "Mandatory Analyses" as well as any "Supplemental Analyses" appropriate to the target unit.

The pre-treatment analyses serve to segregate compatible groupings of containerized wastes for decanting. This is accomplished by appropriate tests, the data from the WPS, and knowledge of the waste source. The pre-treatment analyses are conducted on a sample of each waste stream or a composite sample from several containers of the same waste before the decant operation.

After the pumpable liquid contents have been separated, samples may be collected from the tanks or other bulk liquid storage containers for pre-treatment analyses if further processing is required. The general approach depicted in Figure 6-3 represents this sequence of analyses.

6.2.3 Blending for Thermal Treatment

This operation utilizes the drum processing and tank treatment and storage systems to produce a fuel product which can be used as a feedstock/fuel for a thermal unit. Carefully controlled decanting and mixing of compatible waste streams, such as solvents, paints, waste oils, emulsions, and lean water is carried out to produce a product with limited concentrations of specific constituents. Low heating value material may be blended with high heating value materials in this process provided that the low heating value material is a necessary and beneficial component of the fuel, required for a specific production purpose (e.g., low heating value chlorinated organic materials may be blended with high heating value materials to produce a high heating value fuel with a high chlorine content to meet the fuel users specifications for a fuel to be used in the production of a "Portland" type cement).

The pre-treatment analyses consist of the "Mandatory Analyses" performed on the incoming waste. Pre-treatment "Supplemental Analyses" may include liquid waste compatibility evaluation, viscosity, BTU value, and % halogens. As long as the material conforms to the WPS and is compatible, the waste stream may be blended as described on the waste management decision. If a significant variance is found in the analytical results, additional tests may be requested by facility management in order to determine the appropriate fuel blend.

In-process and post-treatment analyses are used to determine if the resultant fuel product is within specified limits for certain

user-identified parameters. These parameters may include, but are not limited to, PCBs, BTU value, chlorine, sulfur, lead and other heavy metals. Specific parameters and concentrations are identified by the user of the blended fuel and thus, in-process and post-treatment analyses will vary accordingly. Individual feedstocks with pre-treatment or in-process analytical results exceeding the specified product limits may be blended with other feedstocks to produce a specification product. Figure 6-4 presents this sequence of analyses schematically.

6.2.4 Treatment In Containers

This operation involves the addition of stabilization or other agents to containers holding liquids (see section 5.2). For wastes destined for landfill disposal at CWM, post-treatment analyses consist of the paint filter test conducted on 10 percent of each waste stream to ensure no free liquids are present if necessary to determine compliance. For wastes processed to meet the LDR treatment standards, post-treatment analyses will be conducted as necessary to assure that the process continues to be effective in meeting the applicable LDR treatment standards.

6.2.5 Chemical Oxidation

In this process, cyanide- and/or sulfide-bearing or other oxidizable wastes are treated to convert these compounds into innocuous species. This conversion may utilize hydrogen peroxide, sodium hypochlorite, calcium hypochlorite, chlorine, and other oxidizing agents. The general treatment and analytical approach shown in Figure 6-5 applies to each waste batch.

Pre-treatment analyses establish that the waste is sufficiently alkaline, non-ignitable, and the identity and quantity of the optimum oxidizing reagent. The pre-treatment analyses and evaluation also establish that all waste constituents are compatible and, together with process controls, ensure that no adverse reactions will occur in compliance with LHWR (Section 1517 ~~4321.B~~). To assure that the waste is oxidized after treatment, the appropriate tests will be run on the treated waste. ~~Any incompatible wastes will be handled in accordance with LHWR (Section 4321.B).~~

In-process analyses consist of a check on excess oxidizer as a measure of reaction completeness. Samples are taken and analyzed until the oxidizer levels indicate the reaction is complete and safe for the next step of waste management. This may involve the addition of more reagents or a longer reaction time.

6.2.6 Neutralization

In this process, wastes are neutralized and/or heavy metals precipitated. Most of the wastes fed to this system will be acidic in nature. Thus, caustic or other reagents, including suitable alkaline wastes, are typically used for neutralization purposes. The general treatment and analytical approachs are shown in Figure 6-6.

Pre-treatment analyses, together with process controls, will ensure proper treatment and safety such that no adverse chemical or physical reactions occur as noted in LHWR (Section 4321).

In-process analyses are performed to monitor the pH as a means of controlling the reaction process. Post-treatment analyses are performed to confirm that the waste has been sufficiently neutralized.

6.2.7 Hydrolysis

In this process, water-reactive and other selected wastes are allowed to hydrolyze under controlled conditions. The reactions are permitted to continue to completion, after which the hydrolyzed waste is further processed. The general treatment and analytical scheme is shown in Figure 6-7.

Pre-treatment analyses are generally limited to confirming that the waste is reactive with water and is compatible with the operation. All candidate wastes are sampled prior to being put into the treatment system to assure proper treatment and safety such that no adverse chemical or physical reactions occur.

All wastes will be processed such that the resulting mixture or waste is rendered non-reactive as confirmed by the post-treatment analyses.

6.2.8 Treatment of Hazardous Debris

In this process, hazardous debris, as defined in 40 CFR 268.2, is treated by one or more of the specified technologies identified in 40 CFR 268.45.

Visual inspection of the waste is conducted to ensure that the waste matches the WPS information. In addition, "Supplemental Analyses" may be performed at the request of facility management to further evaluate the waste for treatment.

Post-treatment analysis consists of a visual inspection of the treated hazardous debris performed as necessary to confirm that the hazardous debris treatment technology conducted has treated the waste to meet the designated performance and/or design and

operating standards and any contaminant restrictions identified as 40 CFR 268.45.

6.2.9 Biotreatment

In the biotreatment (BIO) process, primarily organic contaminated wastes are treated using microbes to degrade the contaminant into less toxic or non-toxic materials. Reagents that promote the growth of these microbes are introduced into the waste and allowed to "treat" the constituents of concern. Waste may also require further treatment for sulfides or metals contamination once the organic compounds are treated.

Pre-treatment analyses are usually supplied by the generator in order to evaluate the waste as a "BIO" candidate. Based on the contaminant of concern, a pre-treatment step may be required to facilitate the biotreatment process. This may include but not limited to the use of appropriate reagents/agents to minimize free liquids, pretreat chemical species that may inhibit the biotreatment process, or make the wasste material more amenable to biotreatment.

In-process analysis are conducted during the treatment cycle to evaluate the efficiency of the BIO treatment. These analyses are also used to determine when a waste requires amendments to be added to facilitate further treatment.

Post-treatment analyses are performed to determine when the waste has met the treatment standard for land disposal. Figure 6-8 depicts this process.

6.2.10 Oil Recovery and Liquids Removal

In this process, acceptable oily and/or waste materials containing free liquids (e.g. process waters, tank sediment and sludge) are fed into a centrifuge which separates water, oil, and solids. The water will be either reused or properly disposed, while the solids will be sent for further treatment and/or disposal. Any recovered oil will be marketed. The general analytical scheme is shown in **Figure 6-10**.

Pre-treatment analyses are supplied by the generator as the wastes will consist of refinery, pipeline, and exploration & production (E&P) oil tank bottoms, as well as other acceptable oily materials.

Pre-treatment conditioning with appropriate reagents/agents may be used to make feed material amenable to the treatment process, if needed. These may include but not limited to materials used on the feed material to improve pumpablility/ fluidity, adjust pH, salinity, etc.

In-process analyses may be conducted to determine if additional treatment is necessary for the recovered oil to meet market demands.

Post-treatment analyses are performed to determine if the water can be reused and how the solids can be disposed.

6.2.11 Thermal Treatment

In this process, organic constituents are separated from acceptable hazardous waste. In the thermal treatment units, the organic components are vaporized via indirect heat in a rotary drum and routed to a vapor recovery unit, the condensed oils are collected in the oil water separator, and non-condesable gases are routed to a unit designed to handle the appropriate destruction of these gases. Recovered water will be reused or properly disposed. The general analytical scheme is shown in **Figure 6-11.**

Pre-treatment analyses are supplied by the generator as the wastes will consist of process tank bottoms, sludge, catalyst slurry oil, contaminated soils and other acceptable hazardous waste.

Pre-treatment conditioning with appropriate reagents/agents may be used to make feed material amenable to the thermal treatment process, if needed. These may include but not limited to materials used to facilitate processing of free liquids, pH adjustment, increase porosity, etc.

In-process analyses may be conducted, as necessary,to determine the effectiveness of the treatment process is acceptable for the waste stream being processed.

Post-treatment analyses are performed to determine if the water can be reused and how the solids can be disposed.

6.3 Landfill Disposal

A sampling/analysis program is an integral part of this phase of the operation. The results of this program serve to evaluate compliance with the LHWR, facility permit constraints, confirm disposal method selection, and determine safety constraints. Landfill disposal operations generally require those analyses specified in the incoming load procedures (section 5.0).

The general analytical scheme shown in Figure 6-9 ensures the appropriate disposal of hazardous waste by secure landfilling. The physical description supplemented by the paint filter test, as deemed necessary, are especially important since they will determine the presence of free liquid.

7.0 QUALITY ASSURANCE/QUALITY CONTROL

7.1 Introduction

The following Quality Assurance/Quality Control (QA/QC) information for the Lake Charles Facility is being provided as required by 40 CFR Part 270.30(e) and in accordance with the following EPA guidance documents (or the latest revision):

- Test Methods for Evaluating Solid Waste: Physical/Chemical Methods, SW-846, Third Edition, U.S. EPA, Office of Solid Waste, Washington, DC, September 1986, referenced in 40 CFR 260.11.a.11, or the most recent approved version.
- Waste Analysis Plans - A Guidance Manual, EPA/430-SW-84-012, October 1984, or the most recent approved version.

QA/QC procedures are applicable to both sampling procedures and analytical techniques. QA/QC information for these two elements of the waste analysis program has been included in this Waste Analysis Plan (WAP) as recommended in the Waste Analysis Plans - A Guidance Manual.

The facility's QA/QC Assessment Program includes, but is not limited to, the following components:

- INSTRUMENT PERFORMANCE PARAMETERS:
  Each day of operation, analytical systems are evaluated through the use of instrument performance check samples before sample analyses are initiated. Divergence from acceptance criteria requires corrective action before analyses can be performed.
- CONTAMINATION EVALUATION:
  Method blanks are prepared each day of sample analysis and analyzed to ensure that sample contamination has not occurred. If blank analyses do not fall within the acceptance limits, corrective action must be taken before analyses can be performed.
- QUALITY CONTROL CHECK SAMPLES:
  A quality control check sample is analyzed each day that an analytical result is determined for a specific parameter. These results show that the analytical procedures are performed properly and that calibration and standardization of the instrumentation are within the acceptable limits. Acceptable performance demonstrates that prescribed precision and accuracy are being maintained.
- DUPLICATE ANALYSES
  A sample or fortified/spiked sample is analyzed in duplicate for each 20th sample for a particular parameter to assess analytical precision. Selection of duplicate samples is specified in the QC Procedures. Precision is periodically assessed by using the, "Relative %

Difference", or, "% Error", calculations. The level of precision routinely obtainable demonstrates acceptable performance of the method in the sample matrix used.

- SPIKING AND FORTIFICATION OF SAMPLES:

  Fortifications/spikes are employed to monitor recoveries, to maintain extraction, digestion, and concentration techniques at acceptable levels, and to assess analytical accuracy. This procedures provides information on the effect of the sample matrix on the analyte of interest. A ratio of one fortified/spike for each 20th sample analyzed is maintained. The same sample used for the duplicate analysis should be fortified/spike. The percent recovery results are tabulated periodically and reviewed for trends.

- EXTERNAL REFERENCE MATERIALS:

  Reference materials from an independent source other than lab calibration standards are obtained and analyzed in the QC sample. These materials have documented acceptance ranges where performance within these ranges indicates the accuracy of the methods and the acceptability of the calibration standards. Any digressions from the acceptance range are investigated and corrective action is taken.

- PERFORMANCE EVALUATION SAMPLES:

  On a periodic basis, the CWM Lake Charles Facility Laboratory participates in a commercial blind sample program. Results are reported to a third-party consultant who evaluates the data and provides a statistical report to the laboratory. Corrective action is initiated for all performance sample failures.

This section does not provide specific performance standards or quality control procedures for individual sampling and analysis techniques. Such specifics are defined on a corporate-wide basis for all CWM facilities. The corporate manual is a dynamic document that is revised as warranted to reflect technological advances in sampling and analytical techniques. It is maintained and used at the Lake Charles facility, where it is available for regulatory review. CWM QA/QC policies are found in the corporate Quality Control Policy, portions of which have been summarized in the following sections.

7.2 Sampling Program

Sampling procedures for specific facility operations are described in Section 3.0 of the WAP. The selection of the sample collection device depends on the type of sample, the sample container, and the sampling location and the nature and distribution of the waste components. In general, the methodologies used for specific materials correspond to those referenced in 40 CFR Part 261, Appendix I, LAC 33:V.4999, Appendix D, and CWM Sampling Protocols. The selection and use of the sampling device is

supervised by a person thoroughly familiar with both the sampling and analytical requirements.

Sampling equipment is constructed of glass, PVC plastic, aluminum, stainless steel or other non-reactive materials. Care is taken in the selection of the sampling device to prevent contamination of the sample and to ensure compatibility of materials. For example, non-fluorocarbon plastic bottles are not used to sample organic wastes and glass bottles are not used to collect hydrofluoric acid wastes.

Sampling is performed for each waste stream in a manner that ensures the samples are as representative as possible under the conditions of the sampling event.

With a few exceptions, all bulk and containerized waste loads will be sampled (see Section 5.4 of the WAP). Container samples may be composited prior to analysis, provided that individual samples are compatible.

7.3 Analytical Program

CWM has developed a program of quality control practices and procedures to ensure that precision and accuracy are maintained throughout all of its laboratories. The program is monitored at the corporate level. CWM facilities are required to participate in this program. Contract laboratories employed by the company demonstrate quality control practices that are comparable to the company's program.

When utilizing a commercial facility for waste analysis and providing chemical analysis, analytical results, or other appropriate test data to the department which is required as a part of any permit application, required by order of the agency, required to be included on any monitoring reports submitted to the agency, or otherwise required by the regulations adopted pursuant to LEQA, CWM will use commercial laboratories certified under LELAP (Louisiana Environmental Laboratory Accreditation Program) at LAC 33:I.4501 et seq.

The quality control program is based on "Handbook for Analytical Quality Control in Water and Wastewater Laboratories" EPA 600/4-79-019, March 1979. Good laboratory practices which encompass sampling, sample handling, housekeeping and safety are maintained at all laboratories.

7.4 Conclusion

The aforementioned sampling and analytical procedures help ensure that the data obtained are precise, accurate, and representative of the waste stream being sampled. The results of these analyses are used by site management to decide whether or not to accept a particular waste and, upon acceptance, to determine the appropriate method of treatment, storage and disposal. They are also important to ensure that wastes are managed properly by the facility and that incompatible wastes are not inadvertently combined. For

these reasons, the quality of the data and the thoroughness and care with which the sampling and analyses are performed and reported provide an important basis for day-to-day operational decisions.

APPENDIX WAP-A

ANALYTICAL PROCEDURES

APPENDIX WAP-A
ANALYTICAL PROCEDURES

The following analytical procedures are designed to identify or screen waste. They are used by CWM, based upon its operating experience, as rapid but effective means for establishing key decision parameters pertinent to proper waste management.

It should be noted that the information presented herein is generic in character. Therefore, certain test methods discussed in this Appendix may pertain to treatment or disposal processes that are excluded from the facility for which the foregoing Waste Analysis Plan is presented.

Analytical procedures listed here will be conducted in accordance with approved methods and will include as necessary, the most currentversions of such methods. Analytical procedures, not listed belowbut which are listed at the end of this appendix or provided by other recognized sources, e.g., Association of Official Analytical Chemists (AOAC), or that may be developed by CWM and meet CWM performance standards are included as necessary.

I. UNIQUE ANALYTICAL PROCEDURES

These are CWM developed analytical procedures found to provide important quantitative information pertinent to certain processes. In some cases, these tests provide for information not available from standard methods in Section II below. In other cases, these tests are substituted for "standard methods" where they provide sufficient equivalent information.

Acid/Base Reactivity - To a 5-10 gram sample add a strong mineral acid (e.g., H_2SO_4) to change the pH to 1. Add to a separate 5-10 gram sample strong caustic (e.g., NaOH) to change the pH to 12. During the pH change note any changes in waste behavior with respect to production of solids, temperature changes, and gas evolution.

Bench-Scale Treatment Evaluation - Samples of wastes are combined with samples of other wastes or reagents at predetermined ratios. Further testing may be required in order to confirm that the desired reaction has occurred.

Cyanide Detoxification - To approximately 20 mls of cyanide-bearing waste sufficient reagent is added to detoxify the cyanide content. The reagent typically used is a hypochlorite solution. Determination of the presence of cyanide is made by cyanide screen or other appropriate test methods.

Distillation - In an appropriate size standard flask/condenser distillation set-up, add a known quantity of sample and boiling chips. Apply heat. During distillation, maintain heat so that a drop of liquid remains on the thermometer bulb. Monitor temperature and collected volume of each fraction.

Free Cyanide - the amount of free cyanide is determined by acidification of the sample to a pH of 2.0 ± 0.1. This is based on the modified Roberts-Jackson procedure. Quantification is done by titration or color development.

Free Sulfides - an aliquot of sample is treated with zinc acetate solution. The precipitated zinc sulfide is then quantified by the iodometric method for sulfide.

GC/MS Scan - Uses standard methods tailored to the compound class being analyzed.

Heat of Combustion (BTUs) by Near Infrared Reflectance (NIR) Spectroscopy - Heat of combustion is determined by near infrared spectroscopy in a diffuse reflectance mode by placing a properly mixed sample in a diffuse reflectance cell. The instrument produces NIR absorbance spectrum which are converted to a heat of combustion value using a previously defined calibration curve. The method first screens for samples to extract qualitative spectroscopic features from the NIR spectra and then produces quantitative data for heat of combustion using multivariate calibrations.

Heat Phase Separation - Liquid waste is heated in a bath. Layering or phase separation is noted.

Heat Value - Standard analytical method ASTM D240 is modified for the use of automated equipment.

Metals Screen by X-Ray Fluorescence (XRF) - Waste samples may be prepared, if necessary, by grinding to a specified mesh size. The prepared sample is placed in a sample holder and positioned for reading. Instrument output identifies the presence of several metals for screening purposes. Semi-quantification of selected metals is then possible relative to matrix matched standards.

Microwave aided Digestion - A portion of sample is weighed into an appropriate microwave digestion vessel and digested using an acid or acid mixture. The vessel is heated in a microwave oven. After cooling, the contents are diluted to volume, filtered and analyzed by an appropriate method.

Microwave-aided Solvent Extraction - A sample portion of a sludge, sediment, soil, solid, or other waste is extracted for organic contaminants, for example, total petroleum hydrocarbons (TPH), using appropriate solvents, for example, hexane and acetone, in a closed vessel microwave heating system designed for solvent extraction. The resulting extract is cleaned up and the contaminants of interest are determined using appropriate methods.

Organics Screen by Immunoassay - A portion of the waste sample is prepared for immunoassay by using appropriate separation procedures (e.g., extraction, filtration, and/or thin layer chromatography). The extract is then mixed and incubated in a step-wise process inside antibody-coated tubes. The mechanics of mixing, incubating and measuring takes about 30 minutes and results in a color change. The color development is inversely proportional to the concentration of the antibody-specific analyte(s) of interest, e.g.,

herbicides, pentachlorophenol (PCP), pesticides, polyaromatic hydrocarbons (PAHs), or total petroleum hydrocarbons (TPHs).

PCBs Screen by Immunoassay - A portion of the waste sample is prepared for immunoassay using appropriate procedures (e.g., solvent extraction, filtration, and/or thin layer chromatography). The sample extract is then mixed and incubated in a step-wise process inside the antibody-coated tubes. The mechanics of mixing, incubating and measuring takes about 30 minutes and results in a color change in each tube. The color development is inversely proportional to the concentration of PCBs.

pH Spectrum - To at least 50 ml of sample, strong mineral acid is added to change the pH to 1. Then strong caustic is added to change the pH to 14. During the pH change, waste behavior is noted with respect to production of solids, temperature change, and gas evolution.

Percent Acidity - Results are reported as percent of $CaCO_3$ equivalent.

Percent Alkalinity - Results are reported as a percent of the specific alkaline species (e.g., CaO, NaOH, etc.).

Percent Halogens Screen - Using oxygen bomb methods, % halogen is determined on the combustion products. This value is used for decisions for fuels blending and incineration. Modified ASTM procedure D808 is used in this analysis. An alternate method that may be used is a modified EPA Method 300 for anion analysis.

Percent Organics - To a measured aliquot of sample add a measured amount of xylene (or hexane). The mixture is placed in a boiling flask. A Dean Stark trap is attached to the boiling flask and both are attached to a condenser. The material is then heated and allowed to reflux. Water is then trapped in the Dean Stark trap and the percent water is volumetrically determined. The percent solids is determined on the waste/xylene mixture. The percent organics is then determined by subtracting the amount of water solids from the original sample size or weight and reported in percent.

Percent Solids - A measured aliquot of sample is filtered through filter paper. The filter paper is then dried and the percent solids is determined gravimetrically.

Percent Solids by Centrifugation - A measured aliquot of sample is placed into a graduated centrifuge tube and spun. The percent solids is volumetrically determined by measuring the amount of solids in the bottom of the tube versus the original sample volume and is reported in percent.

Peroxide Screen - Peroxide test strips are used to determine presence of organic peroxides or other oxygen donors in solvent and aqueous wastes.

Phenol Screen - "Standard Methods" procedure as modified is used in this analysis. An aliquot of sample is diluted within the linear range of the calibration curve. Color development is achieved by mixing 4-aminoantipyrine and potassium ferricyanide solutions with 100 mls of diluted sample. After approximately fifteen minutes, the absorbance may be read using a spectrophotometer or visually compared to standards.

Potassium Permanganate Screen – Potassium Permanganate ($KMnO_4$) is added to liquids to indicate if the liquids are aqueous or organic matrices.

Load Bearing Strength - A pocket penetrometer or similar device is inserted into the waste or a compacted sample of the waste to determine its load bearing capacity. The load bearing capacity or shear strength is read directly off the pocket penetrometer or other device.

Quick Leach Extraction - An amount of sample is mixed with the appropriate extraction fluid and stirred for a designated time period. After filtration, the pH and/or metals content are determined using the appropriate methods.

Radioactivity Screen - A sample of the material is passed by a Geiger counter or survey meter. Radioactivity levels above background are noted, recorded and investigated.

Radioactive Gamma Spectrum Analysis is used to identify isotope species and concentrations in pCi/g.

Soluble Sulfides - An approximate 10 grams of sample is placed in a suitable container. The pH is adjusted to 9-10 and the remainder of the container is filled with DI water. After settling, 100 mls of the supernatant is drawn off and analyzed for sulfide using a modification of the Iodometric Method (Method 4500-S^{2-} E) as described in "Standard Methods".

Solvent Screen - Uses standard methods tailored to the compound class being analyzed.

Stabilization Evaluation - Used to:

(1) Determine the waste to reagent ratio required to facilitate passing the PFT for free liquids; OR
(2) Other appropriate treatment standard such as "Supplemental Testing" options (e.g., TCLP testing) to
(a) determine if a waste is a potential candidate for Stabilization treatment (based on analytical, Process or Waste knowledge, historical information, etc.) and
(b) if it IS a potential candidate, determine a waste to reagent ratio treatment "recipe, either through bench-scale testing or the use of process/waste knowledge to determine a recipe for field processing; OR
(3) Determine the heat change (heat of reaction) which occurs as the waste/reagent mixture is "setting", i.e., measures the change in temperature rise to assess the potential for immediate reaction as measured by a thermometer or digital thermometer.

Sulfate Screen - To an aliquot of sample in a clean test tube add 1-2 ml of dilute HCl and 1-2 ml of 10% $BaCl_2$ and mix. The presence of a white precipitate indicates a positive sulfate result.

Sulfide Detoxification - To approximately 20 mls of sulfide-bearing waste sufficient reagent is added to detoxify the sulfide content. The reagent typically used is a hypochlorite

solution. Determination of the presence of sulfide is made by the sulfide screen or other appropriate test methods.

Toluene Tests - Take an aliquot of sample and mix it with an aliquot of toluene. Shake well and allow to settle (5 to 10 minutes). The density or cloudiness will indicate presence of water. A clear solution indicates the absence of or low water content.

Viscosity - The viscosity of the material is visually evaluated using water as a reference for low viscosity. Viscosity is reported as low, medium, high or non-flowable, etc.

Visual Oil & Grease - Pour an aliquot of sample into a graduated cylinder to mark. Allow to stand for approximately 5 minutes. Read the milliliters of organic layer and record the percentage by the following equation: Percent Oil & Grease = (Reading/Sample size) x 100.

II. "ADDITIONAL ANALYSES" USING STANDARD TECHNIQUES

PARAMETER METHOD	REFERENCE*
SAMPLE WORK UP TECHNIQUES	
General Extractions	
Extraction Procedure (EP) Toxicity Test Method and Structural Integrity Test	1/1310
Toxicity Characteristic Leaching Procedure (TCLP)	1/1311
Metals Acid Digestions	
For flame atomic absorption spectroscopy (AAS) or inductively coupled plasma spectroscopy (ICP)	2/3005; 1/3010A
Microwave assisted	1/3015A; 2/3030K; 3/D4309, D5258
For graphite furnace atomic absorption spectroscopy (GFAA)	1/3020A
	1/3050B
Of sediments, sludges, soils, and oils	1/3051A
--Microwave assisted	3/E886, E926; 6/
Parr acid bomb digestion	2/3112B
Mercury digestion	
Organic Extractions and Cleanups	
Organic extraction/sample prep	1/3500B
Separatory funnel liquid liquid extraction	1/3510C
Continuous liquid liquid extraction	1/3520B
Soxhlet extraction	1/3540C, 3541
Sonication extraction	1/3550B
Waste dilution	1/3580A
Alumina cleanup	1/3610A, 3611A
Florisil cleanup	1/3620B
Silica gel cleanup	1/3630C
Gel permeation cleanup	1/3640A
Acid-base partition cleanup	1/3650A
Sulfur cleanup	1/3660A
Sulfuric acid/permanganate cleanup	1/3665
Sample cleanup techniques	1/3600C
Cleanup sulfuric acid	9/CWM-95-83
ELEMENTAL ANALYTICAL METHODS	
Inductively coupled plasma atomic emission spectroscopy (ICP)	1/6010B; 2/3120
Antimony (Sb)	
Atomic absorption, direct aspiration method	1/7040; 4/204.1
Atomic absorption, furnace technique	1/7041; 4/204.2
Inductively coupled plasma method	1/6010B; 2/3500-SbC
Arsenic (As)	
Atomic absorption, furnace technique	1/7060A; 4/206.2
Atomic absorption, gaseous hydride method	1/7061A; 4/206.3
Inductively coupled plasma method	1/6010B; 2/3500-AsD
Barium (Ba)	
Atomic absorption, direct aspiration method	1/7080A; 4/208.1
Atomic absorption, furnace technique	1/7081; 4/208.2
Inductively coupled plasma method	1/6010B; 2/3500-BaC
Beryllium (Be)	
Atomic absorption, direct aspiration method	1/7090; 4/210.1
Atomic absorption, furnace technique	1/7091; 4/210.2
Inductively coupled plasma method	1/6010B; 2/3500-BeC

PARAMETER METHOD	REFERENCE*
Cadmium (Cd)	
Atomic absorption, direct aspiration method	1/7130; 4/213.1
Atomic absorption, furnace technique	1/7131A; 4/213.2
Inductively coupled plasma method	1/6010B; 2/3500-CdC
Calcium (Ca)	
Atomic absorption, direct aspiration method	1/7140; 4/215.1
Atomic absorption, furnace technique	4/215.2
Chromium (Cr)	
Atomic absorption, direct aspiration method	1/7190; 4/218.1
Atomic absorption, furnace technique	1/7191; 4/218.2
Hexavalent chromium: Co/precipitation	1/7195
Hexavalent chromium: Colorimetric	1/7196A; 2/3500CrD
Hexavalent chromium: Chelation/extraction	1/7197; 4/218.4
Inductively coupled plasma method	1/6010B; 2/3500-CrC
Copper (Cu)	
Atomic absorption, direct aspiration method	1/7210; 4/220.1
Atomic absorption, furnace technique	1/7211; 4/220.2
Inductively coupled plasma method	1/6010B; 2/3500-CuC
Iron (Fe)	
Atomic absorption, direct aspiration method	1/7380; 4/236.1
Atomic absorption, furnace technique	1/7381; 4/236.2
Phenanthroline method (ferrous)	2/3500FeD
Lead (Pb)	
Atomic absorption, direct aspiration method	1/7420; 4/239.1
Atomic absorption, furnace technique	1/7421; 4/239.2
Inductively coupled plasma method	1/6010B; 2/3500-PbC
Magnesium (Mg)	
Atomic absorption, direct aspiration method	1/7450; 4/242.1
Inductively coupled plasma method	1/6010B; 2/3500-MgC
Manganese (Mn)	
Atomic absorption, direct aspiration method	1/7460; 4/243.1
Atomic absorption, furnace technique	1/7461; 4/243.2
Mercury (Hg) [manual cold/vapor technique]	
In liquid waste	2/3112B; 1/7470A
In solid or semisolid waste	2/3112B; 1/7471A
Nickel (Ni)	
Atomic absorption, direct aspiration method	1/7520; 4/249.1
Atomic absorption, furnace technique	4/249.2
Inductively coupled plasma method	1/6010B; 2/3500-NiC
Selenium (Se)	
Atomic absorption, furnace technique	1/7740; 4/270.2
Atomic absorption, gaseous hydride method	1/7741A; 4/270.3
Inductively coupled plasma method	1/6010B; 2/3500-Sel
Silver (Ag)	
Atomic absorption, direct aspiration method	1/7760A; 4/272.1
Atomic absorption, furnace technique	1/7761; 4/272.2
Inductively coupled plasma method	1/6010B; 2/3500-AgC
Thallium (Tl)	
Atomic absorption, direct aspiration method	1/7840; 4/279.1
Atomic absorption, furnace technique	1/7841; 4/279.2
Inductively coupled plasma method	1/6010B; 2/3500-TlC
Vanadium (V)	
Atomic absorption, direct aspiration method	1/7910; 4/286.1
Atomic absorption, furnace technique	1/7911; 4/286.2
Inductively coupled plasma method	1/6010B; 2/3500-VC

PARAMETER METHOD	REFERENCE*
Zinc (Zn)	
Atomic absorption, direct aspiration method	1/7950; 4/289.1
Atomic absorption, furnace technique	1/7951; 4/289.2
Inductively coupled plasma method	1/6010B; 2/3500-ZnC
ORGANIC ANALYTICAL METHODS	
Gas Chromatography Methods	
Halogenated volatile organics	1/8010B
Nonhalogenated volatile organics	1/8015A
Aromatic volatile organics	1/8020A, 8021A
Phenols	1/8040A
Phthalate esters	1/8060, 8061
Nitrosamines	8070
Organochlorine pesticides and PCBs	1/8000; 1/8081A, 8082
Nitroaromatics and cyclic ketones	1/8090
Polynuclear aromatic hydrocarbons	1/8100
Haloethers	1/8110
Chlorinated hydrocarbons	1/8120A, 8121
Organophosphorous pesticides	1/8140, 8141A
Chlorinated herbicides	1/8150B, 8151
Gas Chromatography/Mass Spectroscopy (GC/MS) Methods	
Volatile organics	1/8240B, 8260A; 7/624
Semi volatile organics	1/8250A; 8270B; 7/625
Other Organic Methods	
Qualitative infrared (IR) spectroscopy method	3/D2621, D4053; 5/
GC/FTIR method	1/8410
Heat of combustion, bomb calorimeter method	1/5050; 3/D240, D2015
Halogen and sulfur content	
Chlorine content	3/D808, D2361, D4327
Halogen content	3/D808, D2361, D4327
Sulfur content	3/D129, D3177, D4327
Oil and grease	1/9070, 9071A; 2/5520; 4/413.1, 413.2
Petroleum hydrocarbons, total recoverable	2/5520F; 4/418.1
Phenolics	1/9065, 9066, 9067; 2/5530, 6420; 4/420.1
Solvent Distillation	4/D86, D1078
Total organic carbon	1/9060; 2/5310A/C; 3/D2579
SCREENING METHODS	
Physical description screen	3/D4979-95
Flammability potential screen	3/D4982-95
Water compatibility screen	3/D5058C-90
Oxidizer screen	3/D4981-95
pH screen	9/cwm-97-71; 3/D4980
Sulfide screen	3/D4978-89
Cyanide screen	3/D5049-90
Commingled waste compatibility screen	3/D5058A
Polymerization potential screen	3/D5058B
Paint filter test screen	1/9095A
Bulk density and apparent specific gravity screen	3/D5057
Radiation screen	9/CWM-97-36

PARAMETER METHOD	REFERENCE*
MISCELLANEOUS ANALYTICAL METHODS	
Acidity	9/CWM-97-68; 2/2310
Alkalinity	9/CWM-97-68; 2/2320
Ammonia	2/4500NH3; 4/350.3
Anions	
By ion chromatography	1/9056; 3/D4327; 4/300.0
Chlorides	1/9250, 9251, 9252A, 9253; 2/4500Cl ; 4/300.0, 325.3
Sulfates	1/9035, 9036, 9038; 2/4500SO42 ; 4/300.0, 375.3
Nitrates	1/9200A; 2/4500NO3 ; 4/300.0, 352.1, 353.2
Fluoride	2/4500F ; 4/300.0, 340.2, 340.3
Bromides	2/4500Br ; 4/300.0, 320.1
Phosphates	2/4500P; 4/300.0, 365.1/4
Ash content	3/D482, D3174
Available hypochlorite	3/D2022-89
Conductivity/conductance	1/9050; 3/D1125; 4/120.1
Cyanides	
Total and amenable cyanides	1/9010B, 9012, 9013, 9014; 2/4500CN C,G; 4/335.1
Free cyanides	2/4500CN H,I
Reactive cyanides	1/7.3.3.2
Flash point	
Pensky Martens closed cup method	9/CWM-97-19; 1/1010; 3/D93
Setaflash closed cup method	1/1020A; 3/D3278
Cleveland open cup method	3/D92
Non-Biodegradable Solvents	3/G21, G22
Oxidation/reduction (redox) potential (ORP)	3/D1498
pH measurement	9/CWM-92-71; 1/9040, 9041A, 9045B; 2/4500H+; 3/E70; 4/150.1
Radiation Gamma Spectroscophy	4/901.1M
Solids	
Total (TS) at 103/105°C	2/2540B; 4/160.3
Dissolved (TDS) at 180°C	2/2540C; 4/160.1
Total suspended (TSS) at 103/105°C	2/2540D; 4/160.2
Fixed and volatile at 500°C	2/2540E, 2540G; 4/160.4
Specific gravity	2/2710F; 3/D70, D891, D1217, D1429, D5057-90
Sulfides	
Extractable sulfides	1/9031
Reactive sulfides	1/7.3.4.1
Soluble sulfides	2/4500S2
Total sulfides	1/9030A; 2/4500S2
Viscosity	3/D88, D446, D2983
Water content	3/D95, D3173, D4006, E203

The leading digit of the reference numbers above are keyed to the numbered publications below.

1/ Test Methods for Evaluating Solid Waste: Physical/Chemical Methods, SW-846, Third Edition, U.S. Environmental Protection Agency, Office of Solid Waste, Washington, DC, September 1986, as referenced in 40 CFR 260.11.a.11.

2/ Standard Methods for the Examination of Water and Wastewater, 18th Edition, American Public Health Association (APHA), American Water Works Association, Water Environment Federation, 1992, or more recent edition or update (available from APHA, 1015 Fifteenth Street, NW, Washington, DC 20005).

3/ Annual Book of ASTM Standards, American Society for Testing and Materials (ASTM), 1993, or more recent edition or revision (available from 1916 Race Street, Philadelphia, PA 19013).

4/ Methods for Chemical Analysis of Water and Wastes, EPA-600/4-79-020, U.S. Environmental Protection Agency, Environmental Monitoring and Support Laboratory (EMSL), Cincinnati, 1979, as revised March 1983, or more recent revision or technical addition (available from EMSL, Cincinnati, OH 45268).

5/ "Infrared Analysis Method" in IERL-RTP Procedures Manual: Level 1 Environmental Assessment, Second Edition, EPA-600/7-78-201, October 1978, or more recent edition.

6/ "Acid Digestion Bombs", Bulletin 4745, Parr Instrument Company (Moline, IL 61265), or more recent bulletin.

7/ "Methods for Organic Chemical Analysis of Municipal and Industrial Wastewater", Title 40, Part 136, Appendix A, Code of Federal Regulations, U. S. Environmental Protection Agency, Environmental Monitoring and Support Laboratory/Cincinnati, as amended June 1986, or more recent revision (available from Superintendent of Documents, Government Printing Office, Washington, DC 20402).

8/ Bellar, T. A., and Lichtenberg, J. J., "The Determination of Polychlorinated Biphenyls in Transformer Fluid and Waste Oils", EPA-600/4-81-045, U.S. Environmental Protection Agency, Environmental Monitoring and Support Laboratory (EMSL), Cincinnati, 1982.

9/ CWM corporate developed method for waste analysis.

Standard analytical procedures not listed here, which may be needed, will be taken from the above-referenced sources or other recognized sources, e.g., Official Methods of Analysis of the Association of Official Analytical Chemists (AOAC), 15th Edition, AOAC, Arlington, Virginia, 1990, or more recent supplements or editions (available from AOAC, 2200 Wilson Blvd., Suite 400, Arlington, VA 22201).

*Referenced methods will be revised as appropriate to reflect the latest update/revision.

APPENDIX WAP-B

LAND DISPOSAL RESTRICTION SAMPLING AND ANALYSES

APPENDIX WAP-B
LAND DISPOSAL RESTRICTION SAMPLING AND ANALYSES

The procedures described herein represent the sampling and analytical procedures established for use at the facility for the treatment, storage and disposal of Land Disposal Restricted (LDR) hazardous waste, see 40 CFR Part 268.

I. LEACHATE

On-site generated untreated leachate will be sampled and analyzed for conformance to the treatment standards for F039 as specified in the preamble to the Third Final Rule, and at the following frequency:

A. The untreated leachate, F039, will be sampled, analyzed and evaluated initially for all constituents on the best demonstrated available technology (BDAT) Treatment Standards list. This constitutes the "initial characterization."

B. At a minimum of biennially the untreated leachate will be sampled and analyzed for a set of target parameter constituents, to ensure management of the leachate to the Land Disposal Restrictions of 40 CFR 268.

C. When the analysis specified above dictates a possible change in management, the untreated leachate will be sampled and analyzed for the full BDAT list of constituents.

The decision to accept off-site generated Leachate will be conducted as detailed in the pre-acceptance section of the Waste Analysis Plan.

II. CORROBORATIVE TESTING

Until such time as EPA develops guidance which establishes guidelines for frequency and scope of corroborative testing, this facility will conduct periodic corroborative testing on waste streams at the direction of facility management.

III. SAMPLING

The Land Disposal Restrictions, 40 CFR 268, have specified the use of "grab" sampling for most of the compliance demonstrations to the Land Disposal Restriction BDAT treatment standards. In accordance with the EPA's "Methods Innovation Rule" (published at 76 FR 34537 – June 14, 2005), CWM will utilize the performance-based sampling approach authorized therein.

APPENDIX WAP-C

FIGURES

Figure 4-1 Generator's Waste Profile Sheet (Short Form)
Figure 4-2 Generator's Waste Profile Sheet (Long Form)
Figure 4-3 Overview of the Pre-acceptance Process
Figure 5-1 Overview of the Incoming Load Identification Process
Figure 6-1 Storage
Figure 6-2 Stabilization
Figure 6-3 Decanting
Figure 6-4 Blending for Thermal Treatment
Figure 6-5 Chemical Oxidation
Figure 6-6 Neutralization
Figure 6-7 Hydrolysis
Figure 6-8 Biotreatment
Figure 6-9 Landfill
Figure 6-10 Oil Recovery
Figure 6-11 Thermal Desorber

Figure 4-1

WM
WASTE MANAGEMENT

GENERATOR'S WASTE PROFILE SHEET

PLEASE PRINT IN INK OR TYPE

Service Agreement on File? ☐ YES ☐ NO

Profile Number: _____

☐ Hazardous ☐ Non-Hazardous ☐ TSCA

Renewal Date

A. Waste Generator Information

1. Generator Name: _____
2. SIC Code _____
3. Facility Street Address: _____
4. Phone _____
5. Facility City: _____
6. State/Province: _____
7. Zip/Postal Code: _____
8. Generator USEPA/FED ID #: _____
9. County: _____
10. State/Province ID#: _____
11. Customer Name: _____
12. Customer Phone:: _____
13. Customer Contact: _____
14. Customer Fax: _____
15. Billing Address _____ Same as above

B. Waste Stream Information

1. **DESCRIPTION**
   a. Name of Waste: _____
   b. Processing Generating Waste: _____

c. Color	d. Strong odor (describe)	e. Physical state @ 70°F ☐ Solid ☐ Liquid ☐ Gas ☐ Sludge ☐ Other _____	f. Layers ☐ Single Layer ☐ Multi-Layer	g. Free liquid range to %
				h. pH: Range to

i. Liquid Flash Point: ☐ <73°F ☐ 73-99°F ☐ 100-139°F ☐ 140-199°F ☐ ≥ 200°F ☐ Not Applicable

j. Chemical Composition (List all constituents [including hazardous organics, debris and UHC's] present in any concentration and submit representative analysis):

Constituents	Concentration Range	Constituents	Concentration Range

SAMPLE
originals of this form should be used

TOTAL COMPOSITION MUST EQUAL OR EXCEED 100%

k. ☐ Oxidizer ☐ Pyrophoric ☐ Explosive ☐ Radioactive ☐ Carcinogen ☐ Infectious ☐ Shock Sensitive ☐ Water Reactive

l. Does the waste represented by this profile contain [illegible] carcinogens which require OSHA Notification? (list in Section B.1.j)..... ☐ YES ☐ NO

m. Does the waste represented by this profile contain dioxins? (list in B.1.j)..... ☐ YES ☐ NO

n. Does the waste represented by this profile contain asbestos?..... ☐ YES ☐ NO
If yes..... ☐ friable ☐ non-friable

o. Does the waste represented by this profile contain benzene..... ☐ YES ☐ NO
If yes, concentration _____ Ppm
Is the waste subject to benzene waste operations NESHAP?..... ☐ YES ☐ NO

p. Is the waste subject to RCRA Subpart CC controls..... ☐ YES ☐ NO
If no, does the waste meet the organic LDR Exemption:..... ☐ YES ☐ NO
If no, does the waste contain <500 ppmw volatile organic (VOC's)?..... ☐ YES ☐ NO
Volatile organic concentration _____ Ppmw

q. Does the waste contain any Class I or Class II ozone-depleting substance?..... ☐ YES ☐ NO

r. Does the waste contain debris? (list in Section B.1.j)..... ☐ YES ☐ NO

s. Is the waste subject to controls as a Group 1 wastewater or residual under the HON?..... ☐ YES ☐ NO
If yes, is it a Table 8 _____ or Table 9 _____ Compound?

2. **Quantity of Waste**
Estimated Annual Volume _____ ☐ Tons ☐ Yards ☐ Drums ☐ Other (specify) _____

3. **Shipping Information**
   a. Packaging:
   ☐ Bulk Solid; Type/Size: _____ ☐ Bulk Liquid, Type/Size _____
   ☐ Drum; Type/Size: _____ ☐ Other: _____
   b. Shipping Frequency: Units _____ Per: ☐ Month ☐ Quarter ☐ Year ☐ One Time ☐ Other _____
   c. Is this a U.S. Department of Transportation (USDOT) Hazardous Material? (If no, skip d, e and f)..... ☐ YES ☐ NO

999-2117(#2182)
Ref: Form WMI-4153 (05/99)
PAGE 1

Figure 4-1 (continued)

WASTE MANAGEMENT

GENERATOR'S WASTE PROFILE SHEET

PLEASE PRINT IN INK OR TYPE

d. Reportable Quantity (lbs.; kgs.): _____ e. Hazard Class/ID#: _____
f. USDOT Shipping Name: _____
g. Personal Protective Equipment Requirements: _____
h. Transporter/Transfer Station: _____

C. Generator's Certification (Please check appropriate responses, sign and date below.)

1. Is this a USEPA hazardous waste (40 CFR Part 261)? If the answer is no, skip to 2. ☐ YES ☐ NO
   a. If yes, identify ALL USEPA listed and characteristic waste code numbers (D,F,K,P,U) _____
   b. If a characteristic hazardous waste, do underlying hazardous constituents (UHCs) apply? (If yes, list in Section B.1.j). ☐ YES ☐ NO
   c. Does this waste contain debris? (If yes, list size and type in Chemical Composition - B.1.). ☐ YES ☐ NO
2. Is the waste from a soil remediation project? ☐ YES ☐ NO
   a. Will the Alternative Soil treatment Standards to be invoked? ☐ YES ☐ NO
   b. Do underlying hazardous constituents apply? (If yes, list in Section B.1.j). ☐ YES ☐ NO
3. Is the waste from a CERCLA (40 CFR 300, Appendix B) or state mandated clean-up? ☐ YES ☐ NO
   If yes, attach Record of Decision (ROD), 104/106 or 122 order or court order that governs site clean-up for activity. For state mandated clean-up, provide relevant documentation.
4. Does the waste represented by this waste profile sheet contain radioactive material? ☐ YES ☐ NO
   a. Is disposal regulated by the Nuclear Regulatory Commission? ☐ YES ☐ NO
   b. If NORM, identify isotopes and concentration, pCi/g _____ ☐ YES ☐ NO
5. Does the waste represented by this waste profile sheet contain concentrations of Polychlorinated Biphenyls (PCBs) regulated by 40 CFR 761? (If yes, list in Chemical Composition - B.1.j). ☐ YES ☐ NO
   a. Were the PCBs imported into the U.S.? ☐ YES ☐ NO
   b. Are PCBs regulated under the Toxic Substances Control Act Remediation (Mega) Rule? ☐ YES ☐ NO
6. Do the waste profile sheet and its attachments contain accurate descriptions of the waste material, and has all relevant information within the possession or knowledge regarding known or suspected hazards pertaining to the waste been disclosed to the Contractor? ☐ YES ☐ NO
7. Will all changes which occur in the character of the waste be reported by the Generator and disclosed to the Contractor prior to providing the waste to the Contractor? ☐ YES NO

☐ Check here if a Certificate of Destruction or Disposal is attached.

Any sample submitted is representative as defined in 40 CFR 261 Appendix I or by using an equivalent method. I authorize WMI to obtain a sample from any waste shipment for purposes of recertification. If this certification is made by a broker, the undersigned signs as authorized agent of the generator and has confirmed the information contained in this Profile Sheet from information provided by the generator and additional information as it has determined to be reasonably necessary. If approved for management, Contractor has all the necessary permits and licenses for the waste that has been characterized and identified by this approved profile.

Certification Signature: _____ Title: _____

Name (Type or Print) _____ Company Name _____ Date: _____

☐ Check if additional information is attached. Indicate the number of attached pages. _____

D. WMI Management's Decision — FOR WMI USE ONLY

1. Management Method ☐ Landfill ☐ Non-hazardous Solidification ☐ Bioremediation ☐ Incineration ☐ Hazardous Stabilization ☐ Other (Specify) _____
2. Proposed Ultimate Management Facility: _____
3. Precautions, Special Handling Procedures, or Limitation on Approval _____
4. Waste Form: _____ 5. Source: _____ 6. System Type _____

Special Waste Decision ☐ Approved ☐ Disapproved
Salesperson's Signature: _____ Date: _____
Division Approval Signature (Optional): _____ Date: _____
Special Waste Approvals Person Signature _____ Date: _____

999-2117(#2182)
Ref: Form WMI-4153 (05/99)
PAGE 2

SAMPLE
originals of this form should be used

Figure 4-2

Chemical Waste Management, Inc.

Date Printed _____ GENERATOR'S WASTE PROFILE SHEET Profile # ___ ___

(_) Check here if this is a Recertification LOCATION OF ORIGINAL _____

GENERAL INFORMATION

1. Generator Name: _____ Generator USEPA ID: _____
2. Generator Address: _____ Billing Address: (_) Same _____
3. Technical Contact/Phone: _____
4. Alternate Contact/Phone: _____ Billing Contact/Phone: _____

PROPERTIES AND COMPOSITION

5. Process Generating Waste: _____
6. Waste Name: _____

7A. Is this a USEPA hazardous waste (40 CFR Part 261)? Yes (_) No (_)
B. Identify ALL USEPA listed and characteristic waste code [illegible] (D[illegible],K,P,U): _____
_____ State [illegible] Codes: _____

8. Physical State @ 70F: A. Solid(_) Liqu[illegible] Bothi[illegible] Single La[illegible] Multilayer (_) C. Free liq. range __0 to __0%

9A. pH: Range 0.0 or Not Applicable (_) [illegible] (_):describe _____

10. Liquid Flash Point: < 73F (_) 73-[illegible] (_) [illegible]00-1[illegible] (_) 140-199F (_) [illegible]200F (_) N.A. (_) Closed Cup (_) Open Cup (_)

11. CHEMICAL COMPOSITION: [illegible] constituents (incl. halogenated organics) present in any concentration and forward analysis

Constituents	Range	Unit Description
	to	
	to	
	to	
	to	
	to	
	to	
TOTAL COMPOSITION (MUST EQUAL OR EXCEED 100%):		

12. OTHER: PCBs if yes, concentration _____ [illegible] regulated by 40 CFR 761 (_). Pyrophoric (_) Explosive (_) Radioactive (_) Benzene if yes, concentration _____ ppm. NESHAP (_) Shock Sensitive (_) Oxidizer (_) Carcinogen (_) Infectious (_) Other _____

13. If waste subject to the land ban & meets treatment standards, check here: _ & supply analytical results where applicable.

SHIPPING INFORMATION

14. PACKAGING: Bulk Solid (_) Bulk Liquid (_) Drum (_) Type/Size: _____ Other _____

15. ANTICIPATED ANNUAL VOLUME: _____ Units: _____ Shipping Frequency: _____

SAMPLING INFORMATION

16a. Sample source (drum, lagoon, pond, tank, vat, etc.): _____ Sample Tracking Number: _____

Date Sampled: _____ Sampler's Name/Company: _____

16b. Generator's Agent Supervising Sampling: _____ 17. (_) No sample required (See instructions.)

GENERATOR'S CERTIFICATION

I hereby certify that all information submitted in this and all attached documents contains true and accurate descriptions of this waste. Any sample submitted is representative as defined in 40 CFR 261 - Appendix I or by using an equivalent method. All relevant information regarding known or suspected hazards in the possession of the generator has been disclosed. I authorize CWM to obtain a sample from any waste shipment for purposes of recertification.

_____ Signature _____ Name and Title _____ Date

SAMPLE
originals of this form should be used

Figure 4-2 (continued)

Date Printed _____ Profile # ___ _____

18. Check ONE: This is a _ wastewater _ nonwastewater.

19. If this waste is subject to any California list restrictions enter the letter from below (either A or B.1) next to each restriction that is applicable:
___ HOCs, ___ PCBs, ___ Acid, ___ Metals, ___ Cyanides

20. Identify ALL Characteristic and Listed USEPA hazardous waste numbers that apply (as defined by 40 CFR 261). For each waste number, identify the subcategory (as applicable, check none, or write in the description from 40 CFR 268.41, 268.42, and 268.43).

Ref #	A. US EPA HAZARDOUS WASTE CODE(S)	B. SUBCATEGORY Enter the subcategory description. If not applicable, simply check none		C. APPLICABLE TREATMENT STANDARDS			D. HOW MUST THE WASTE BE MANAGED? Enter letter from below
				PERFORMANCE-BASED: Check as applicable		SPECIFIED TECHNOLOGY: If applicable enter the 40 CFR 268.42 table 1 treatment code(s)	
		DESCRIPTION	NONE	268.41(a)	268.43(a)	268.42	
1							
2							
3							
4							
5							
6							
7							
8							
9							
10							

SAMPLE
originals of this form should be used

Management under the land disposal restrictions
A RESTRICTED WASTE [illegible]
B.1 RESTRICTED WASTE TREATED TO 268.40 STANDARDS
B.3 GOOD FAITH ANALYTICAL CERTIFICATION [illegible] DEGANICS
B.4 DECHARACTERIZED WASTE REQUIRES [illegible] FOR UHCS
B.5 RESTRICTED WASTES TREATED TO ALTERNATE SOIL STANDARDS
B.6 RESTRICTED WASTES TREATED TO ALTERNATE DEBRIS STANDARDS
C RESTRICTED WASTE SUBJECT TO A VARIANCE
D RESTRICTED WASTE CAN BE LAND DISPOSED WITHOUT FURTHER TREATMENT
E NOT CURRENTLY SUBJECT TO LAND DISPOSAL RESTRICTIONS

21. Is this waste a soil or debris? No: _ Yes, Soil: _ Yes, Debris: _

22. Specific Gravity Range: _____ to _____

23. Indicate the range of each: Units

Cyanides: _ _____ to _____ _____ Type (free, total, amenable, etc.) _____

Cyanides: _ _____ to _____ _____ Type (free, total, amenable, etc.) _____

Sulfides: _ _____ to _____ _____ Type _____

Optional Phenolics: _ _____ to _____ _____

24. Identify the waste color _____, DOT physical state _____

and physical appearance _____

Figure 4-2 (continued)

Date Printed _____

Profile # ___ _____

25. COMPLETE ONLY FOR WASTES INTENDED FOR FUELS OR INCINERATION

TOTAL

Beryllium as Be _____ ppm

Potassium as K _____ ppm

Sodium as Na _____ ppm

Bromine as Br _____ %

Chlorine as Cl _____ %

Fluorine as F _____ %

Sulfur as S _____ %

26. RECLAMATION, FUELS or INCINERATION PARAMETERS (Provide if information is available)

RANGE

A. Heat Value (Btu/lb) _____-_____

B. Water: _____

C. Viscosity (cps): _____@_____F _ 100 F _ 150 F

D. Ash: _____ %

E. Settleable solids: _____ %

F. Vapor Pressure @ STP (mm/Hg): ____

G. Is this waste a pumpable liquid? Yes _ No _

H. Can this waste be treated to improve flow? Yes _ No _

I. Is this waste soluble in water? Yes _ No _

J. Particle size: Will the solid portion of this waste pass through a 1/8 inch screen? Yes _ No _

27. TRANSPORTATION INFORMATION

A. Is this a DOT Hazardous Material? Yes _ No _

B. Proper Shipping Name: _____

and Additional Description if required: _____

C. DOT Regulations: _____ Hazard Class: ___ _____ UN: _____ Packing Group: ___

D. CERCLA Reportable Quantity RQ and Units (Lb. Kg): _____

E. Non-Bulk code ___ Bulk code ___

F. Special Provisions ___ ___ ___ ___

G. Labels Required _____

28. SPECIAL HANDLING INFORMATION

_____

_____

_____

_____

_ Material Safety Data Sheets Attached

29. OTHER INFORMATION

_____

_____

_____

_____

_____

30. CHEMICAL WASTE MANAGEMENT CERTIFICATION

Chemical Waste Management, Inc. has all the necessary permits and licenses for the waste that has been characterized and identified by this approved profile.

SAMPLE
originals of this form should be used

Figure 4-2 (continued)

Date Printed _____ Profile # ___ _____

31. OTHER HAZARDOUS CONSTITUENTS Indicate if the waste contains any of the following

METALS	TCLP Information: Check only ONE for each constituent. Use units: ppm, mg/l				TCLP Data	TCA OR TOTAL Use units: ppm, mg/l, mg/kg or percent			
	Less Than	TC Regulated Level	Equal or More	Waste No.	TCLP Actual	California List Less Than	California List Regulated Level	California List Equal or More	Actual
Arsenic as As		5.0 mg/l		D004			500 mg/l		
Barium as Ba		100.0 mg/l		D005					
Cadmium as Cd		1.0 mg/l		D006			100 mg/l		
Chromium tot Cr		5.0 mg/l		D007					
Lead as Pb		5.0 mg/l		D008			500 mg/l		
Mercury as Hg		.2 mg/l		D009			20		
Selenium as Se		1.0 mg/l		D010			mg/l		
Silver as Ag		5.0 mg/l		D011					
Nickel as Ni							134 mg/l		
Thallium as Tl							mg/l		
Chromium Hex							500 mg/l		
Antimony									
Beryllium									
Copper									
Vanadium									
Zinc									

SAMPLE
originals of this form should be used

Figure 4-2 (continued)

Date Printed _____ Profile # ___ _____

32. OTHER HAZARDOUS CONSTITUENTS Indicate if the waste contains any of the following.

ORGANICS	TCLP Information Check only ONE for each constituent				TCLP Data	TCA or TOTAL Use units: ppm, mg/l or %
	Less Than	Regulated Level	Equal or More	Waste No.	TCLP Analytical Test Results Use units: ppm or mg/l	
BNZ Benzene		0.5 mg/l		D018		
CTC Carbon Tetrachloride		0.5 mg/l		D019		
CHD Chlordane		0.03 mg/l		D020		
CHB Chlorobenzene		100.0 mg/l		D021		
CHF Chloroform		6.0 mg/l		D022		
MCR m-Cresol		200 mg/l		D024		
OCR o-Cresol		200.0 mg/l		D023		
PCR p-Cresol		200.0 mg/l		D025		
CRS Cresol		200.0 mg/l		D026		
D24 2,4-D		10.0 mg/l		D016		
D14 1,4 Dichlorobenzene		7.5 mg/l		D027		
D12 1,2-Dichloroethane		[illegible] mg/l		[illegible]		
D11 1,1-Dichloroethylene		0.7 mg/l		D029		
D2T 2,4-Dinitrotoluene		130 mg/l		D030		
END Endrin		0.02 mg/l		[illegible]		
HPT Heptachlor, & Its Epoxide		0.008 mg/l		D031		
HCI Hexachloro-1,3 Butadiene		[illegible] mg/l		D033		
HCB Hexachlorobenzene		[illegible] mg/l		D032		
HCE Hexachloroethane		3.0 mg/l		D034		
LND Lindane		[illegible] mg/l		D013		
MOC Methoxychlor		[illegible] mg/l		D014		
MEK Methyl Ethyl Ketone		200.0 mg/l		[illegible]		
NB Nitrobenzene		2.0 mg/l		[illegible]		
PCP Pentachlorophenol		100.0 mg/l		D037		
PYR Pyridine		5.0 mg/l		D038		
TTC Tetrachloroethylene		0.7 mg/l		D039		
TXP Toxaphene		0.5 mg/l		D015		
TP5 2,4,5-TP Silvex		1.0 mg/l		D017		
TCE Trichloroethylene		0.5 mg/l		D040		
T45 2,4,5-Trichlorophenol		400.0 mg/l		D041		
T46 2,4,6-Trichlorophenol		2.0 mg/l		D042		
VCL Vinyl Chloride		0.2 mg/l		D043		

SAMPLE
originals of this
form should
be used

FIGURE 4-3
OVERVIEW OF THE PRE-ACCEPTANCE PROCESS

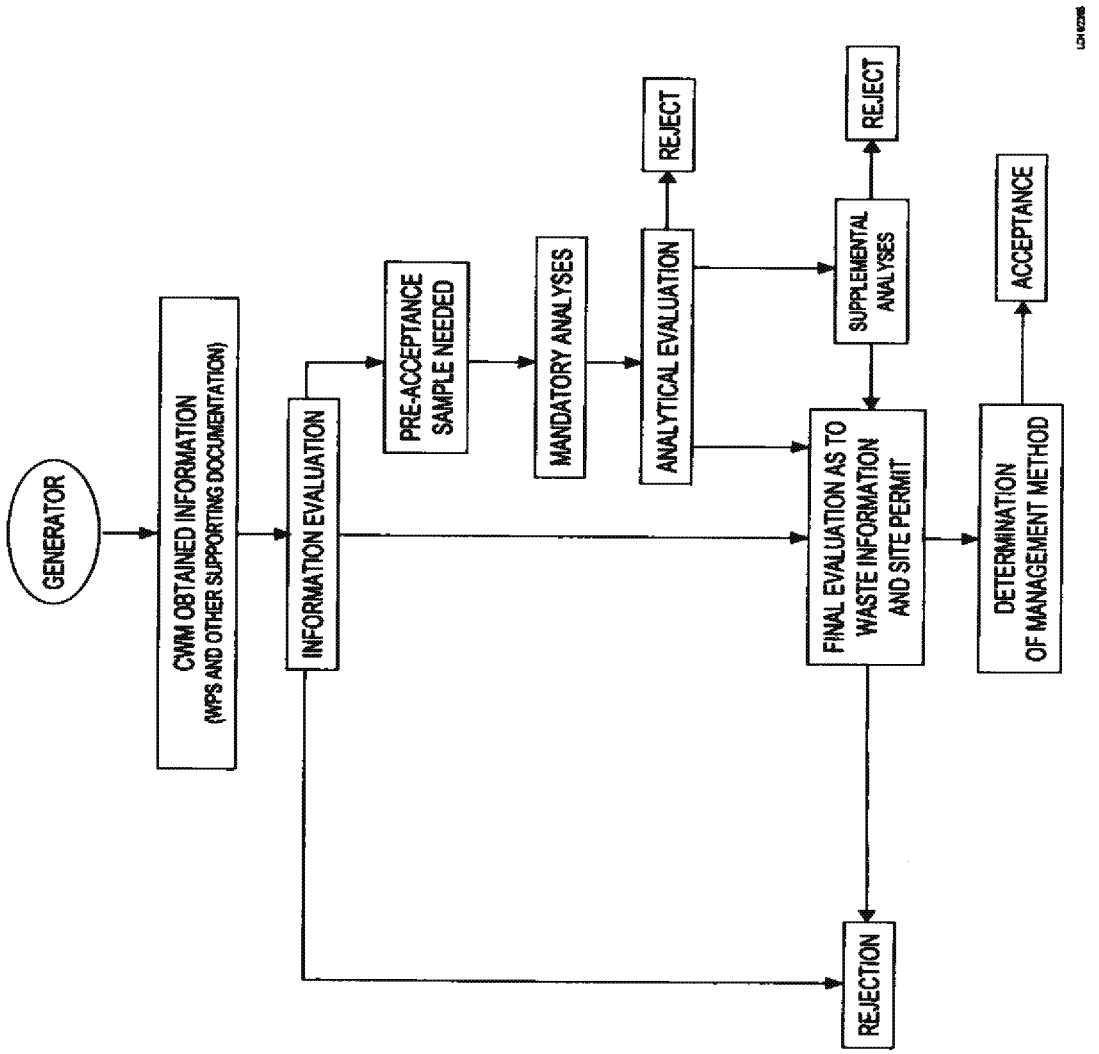

FIGURE 5-1
OVERVIEW OF THE INCOMING LOAD IDENTIFICATION PROCESS

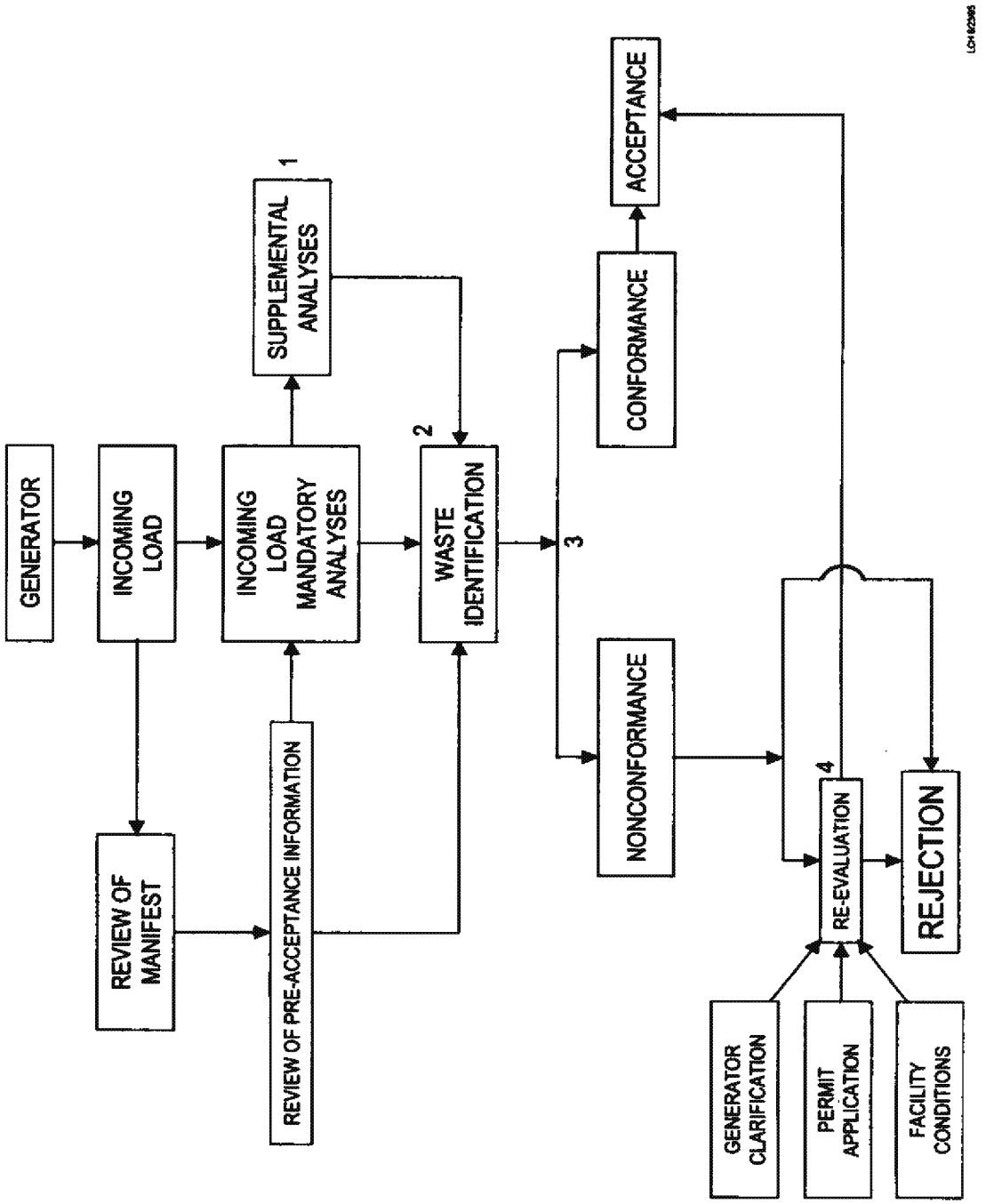

FIGURE 6-1
STORAGE/TREATMENT

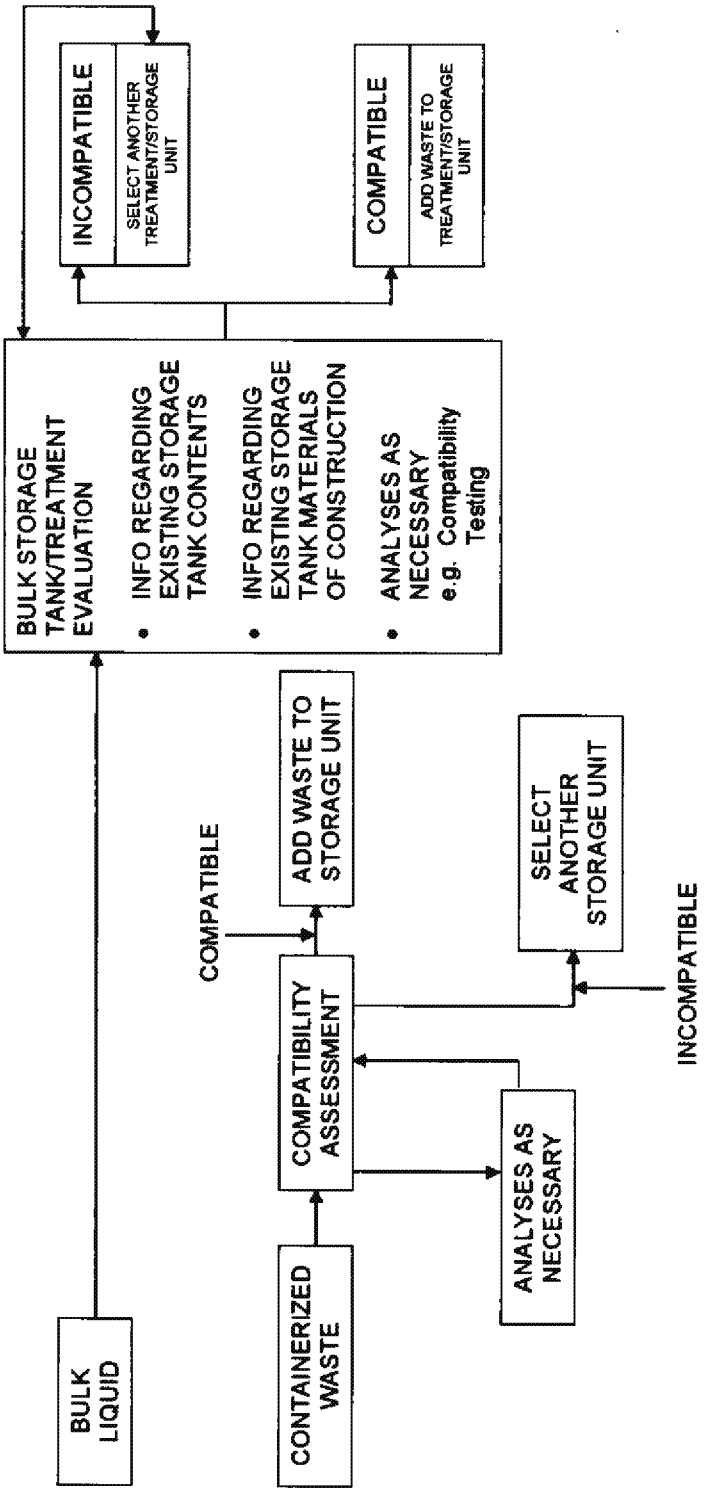

FIGURE 6-2
STABILIZATION

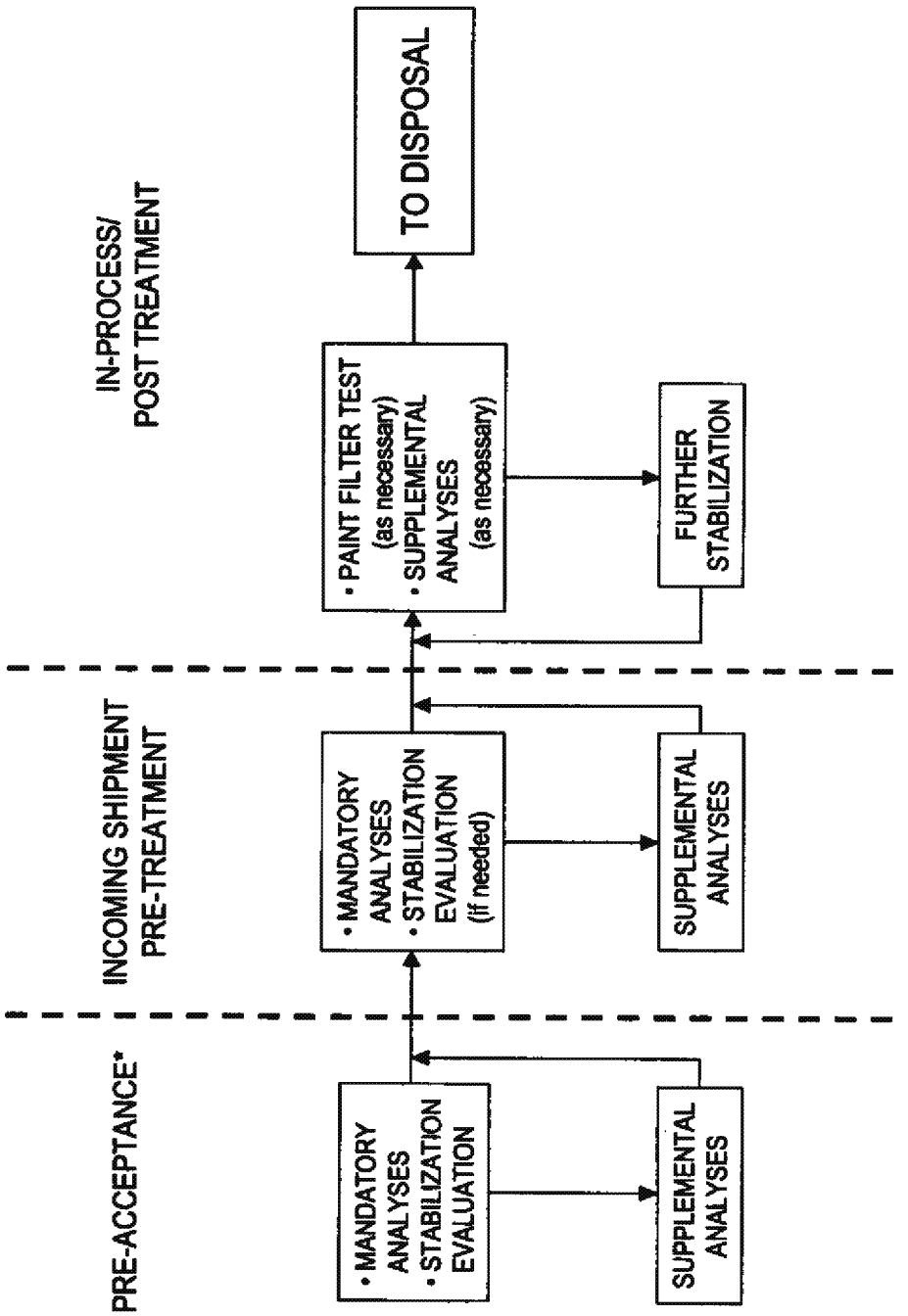

*If pre-acceptance sample is necessary.

FIGURE 6-3
DECANTING

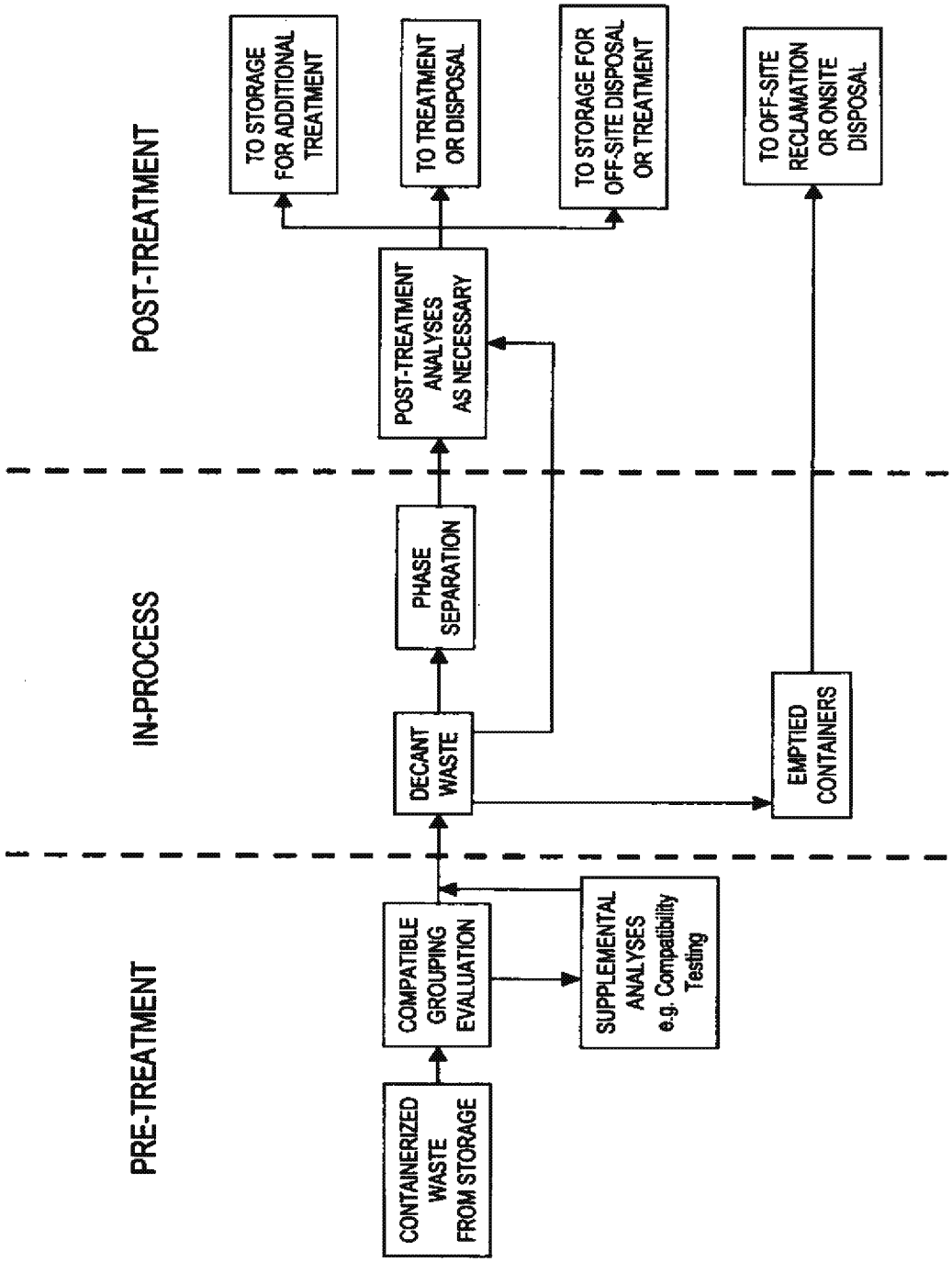

FIGURE 6-4
BLENDING FOR THERMAL TREATMENT

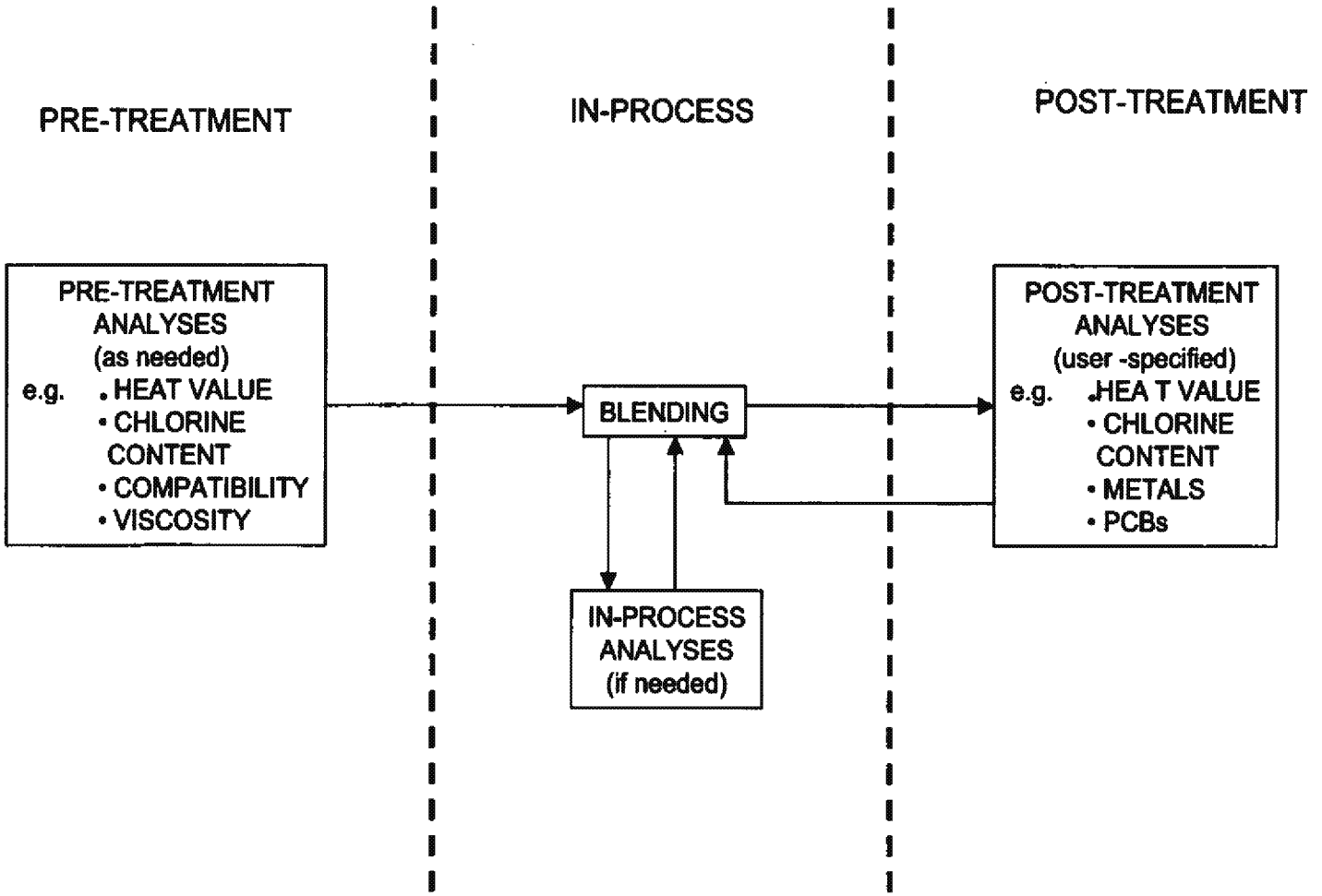

LCH 6/23/95

FIGURE 6-5
CHEMICAL OXIDATION

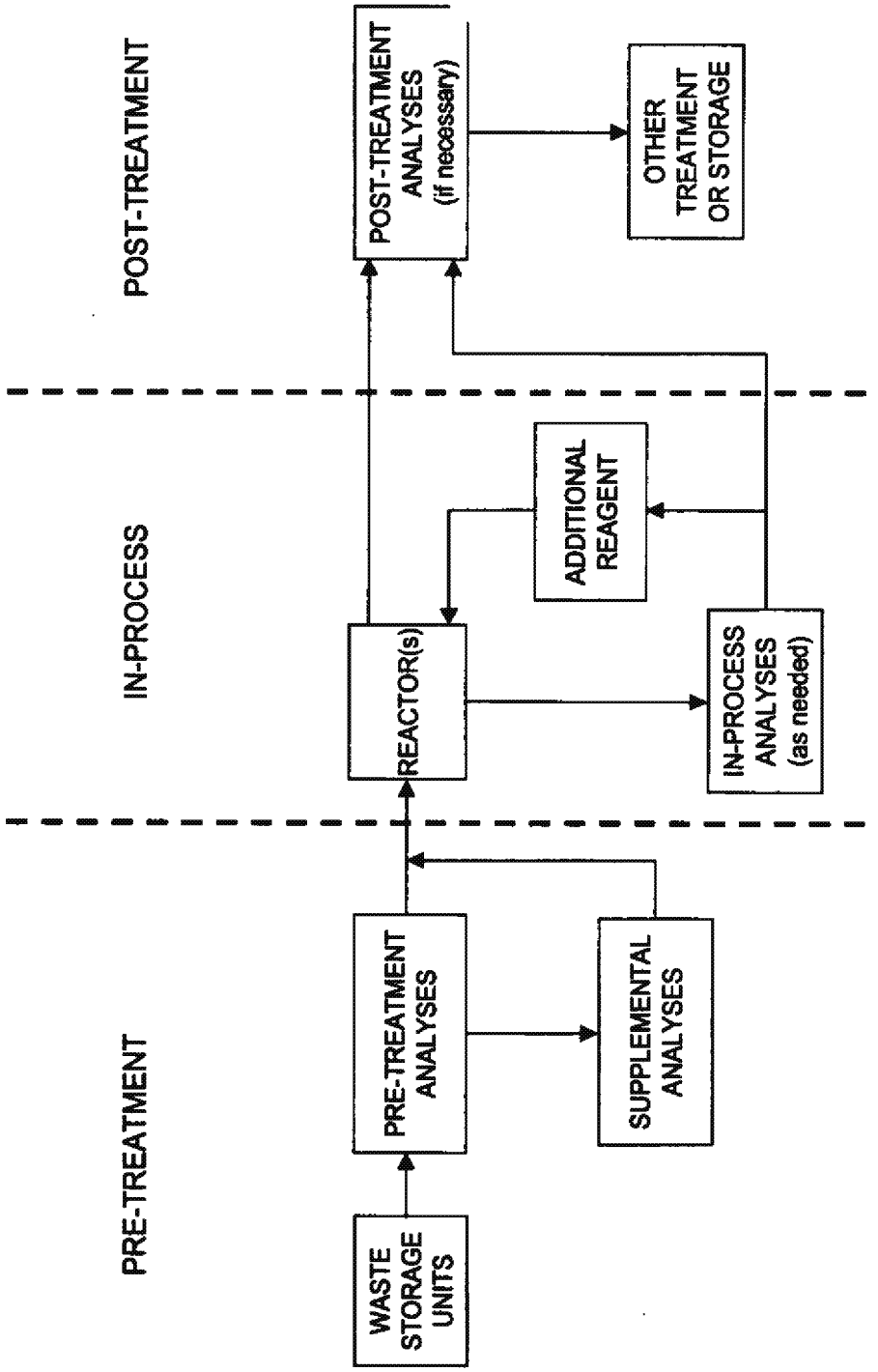

FIGURE 6-6
NEUTRALIZATION

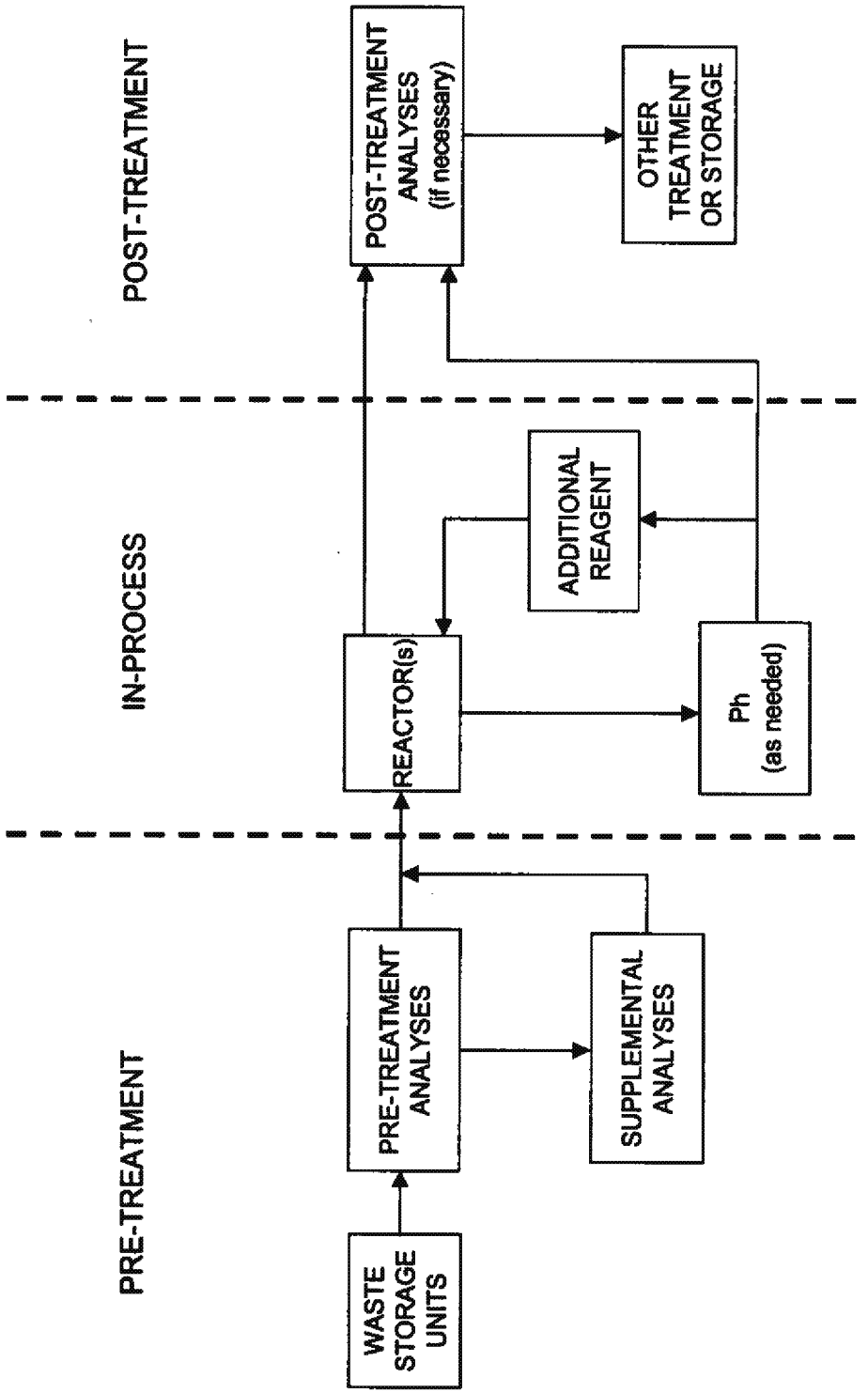

FIGURE 6-7
HYDROLYSIS

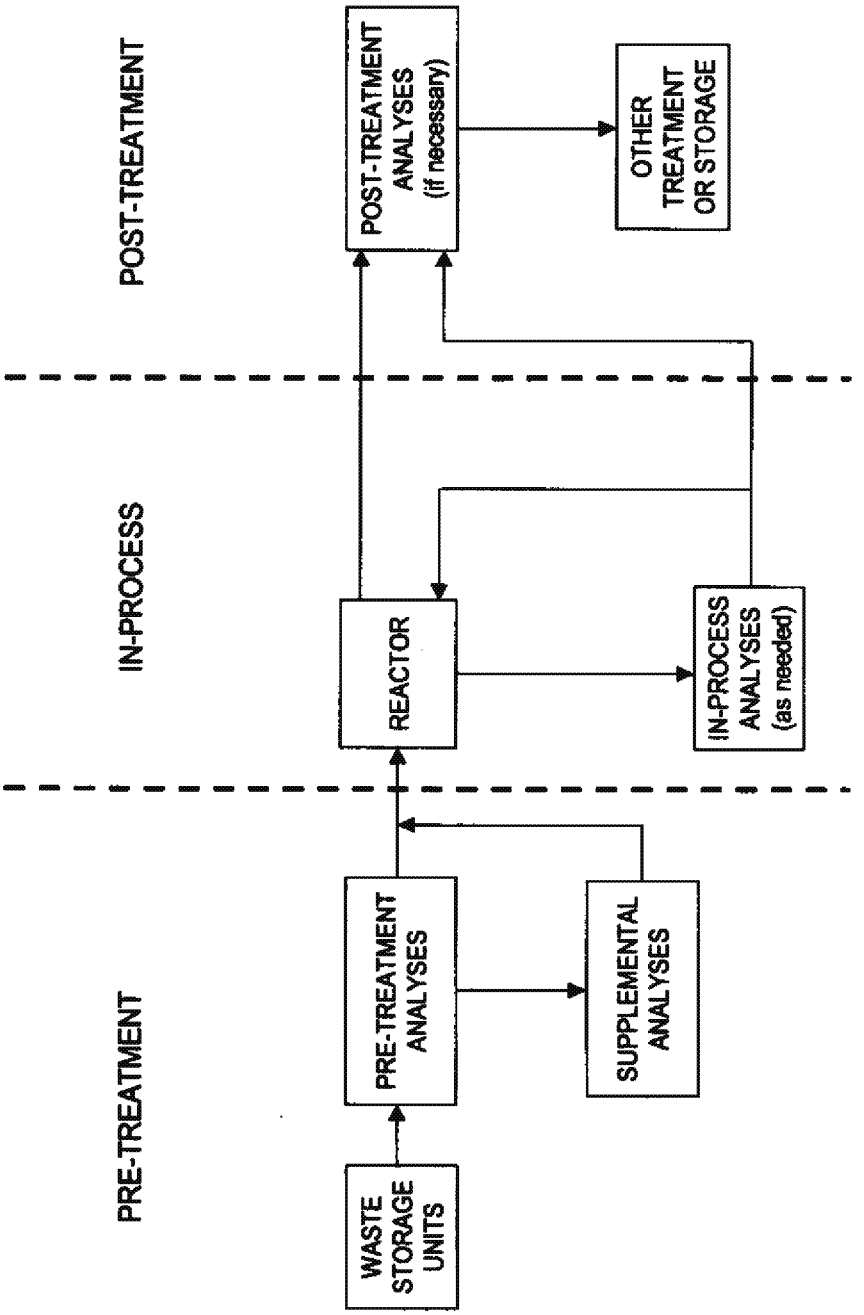

FIGURE 6-8

BIOTREATMENT

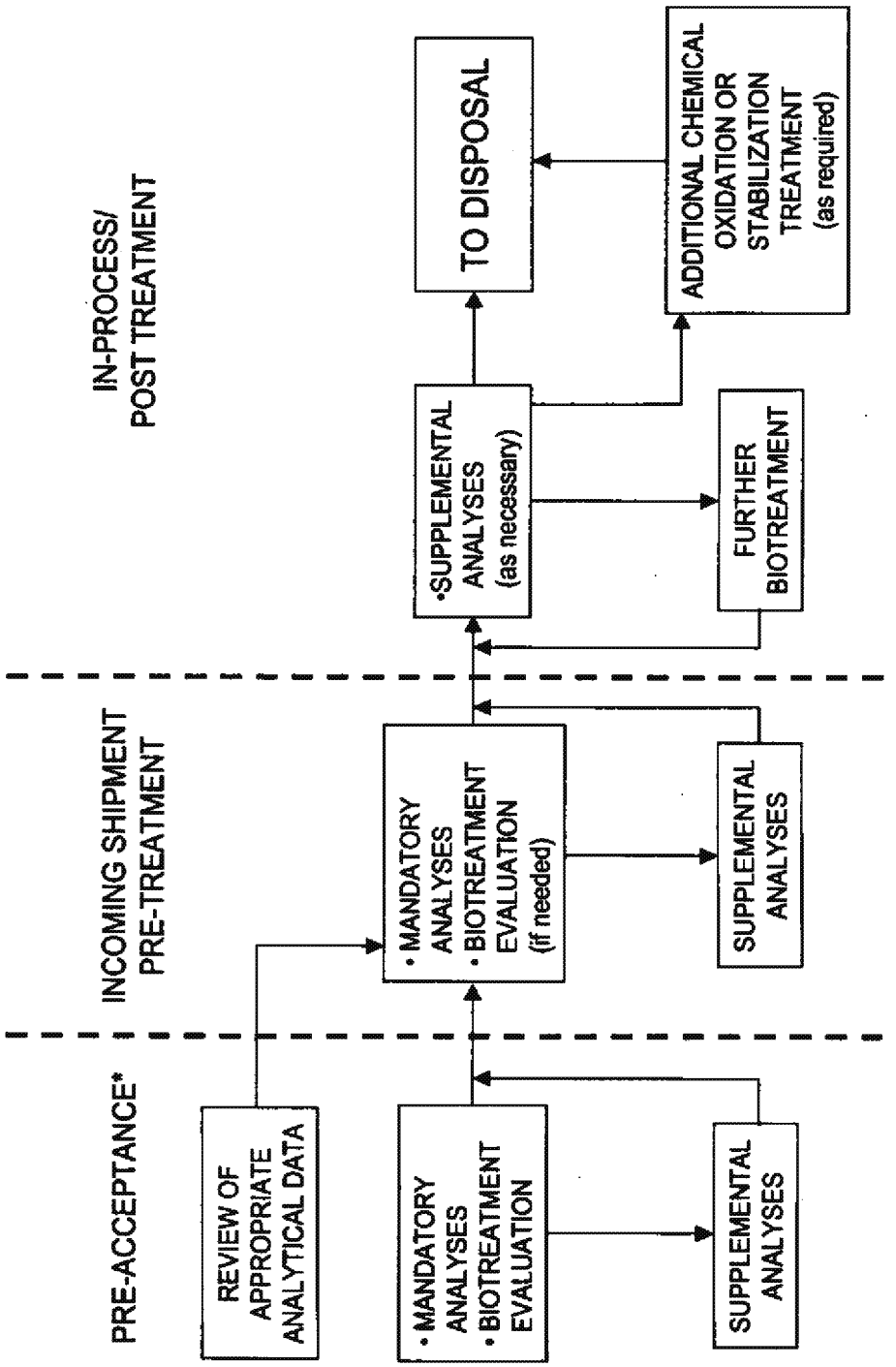

*If pre-acceptance sample is necessary.

FIGURE 6-9
LANDFILL

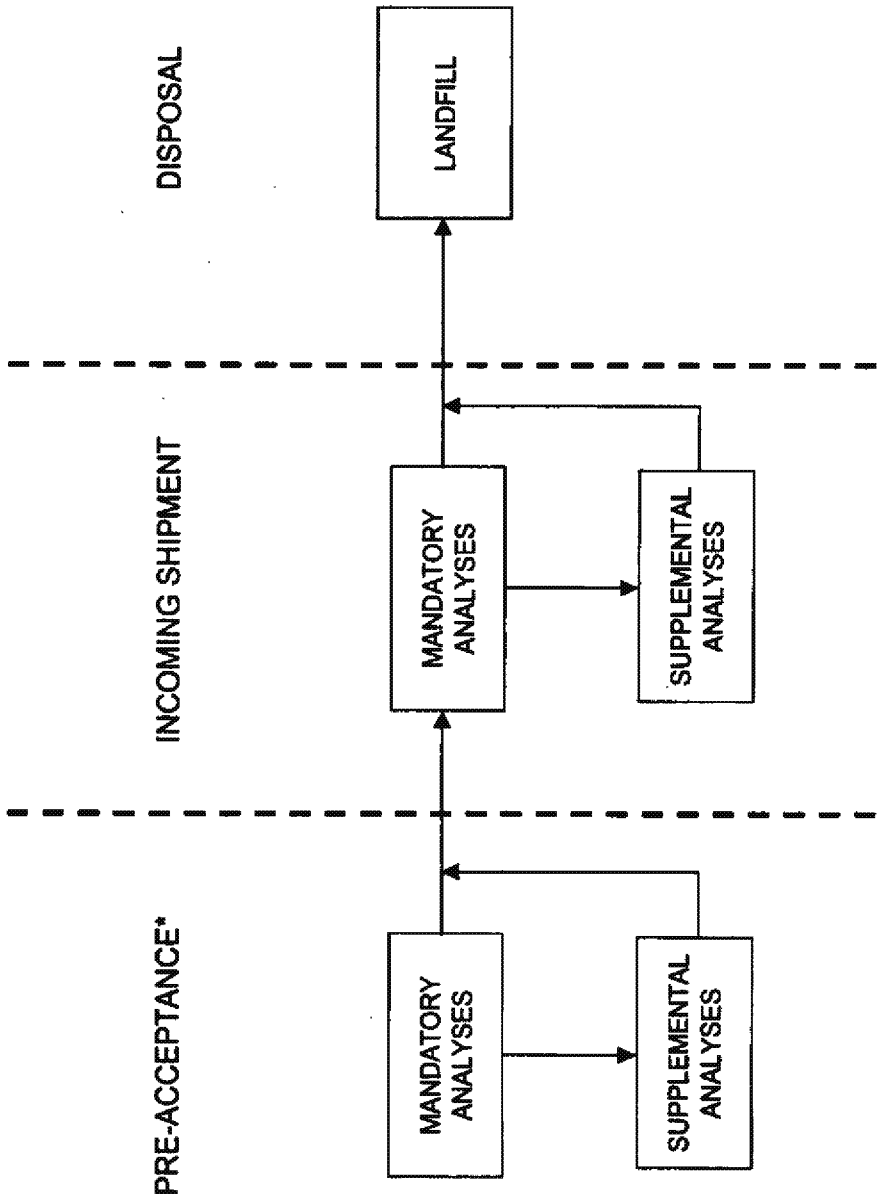

*If pre-acceptance sample is necessary.

FIGURE 6-10
OIL RECOVERY

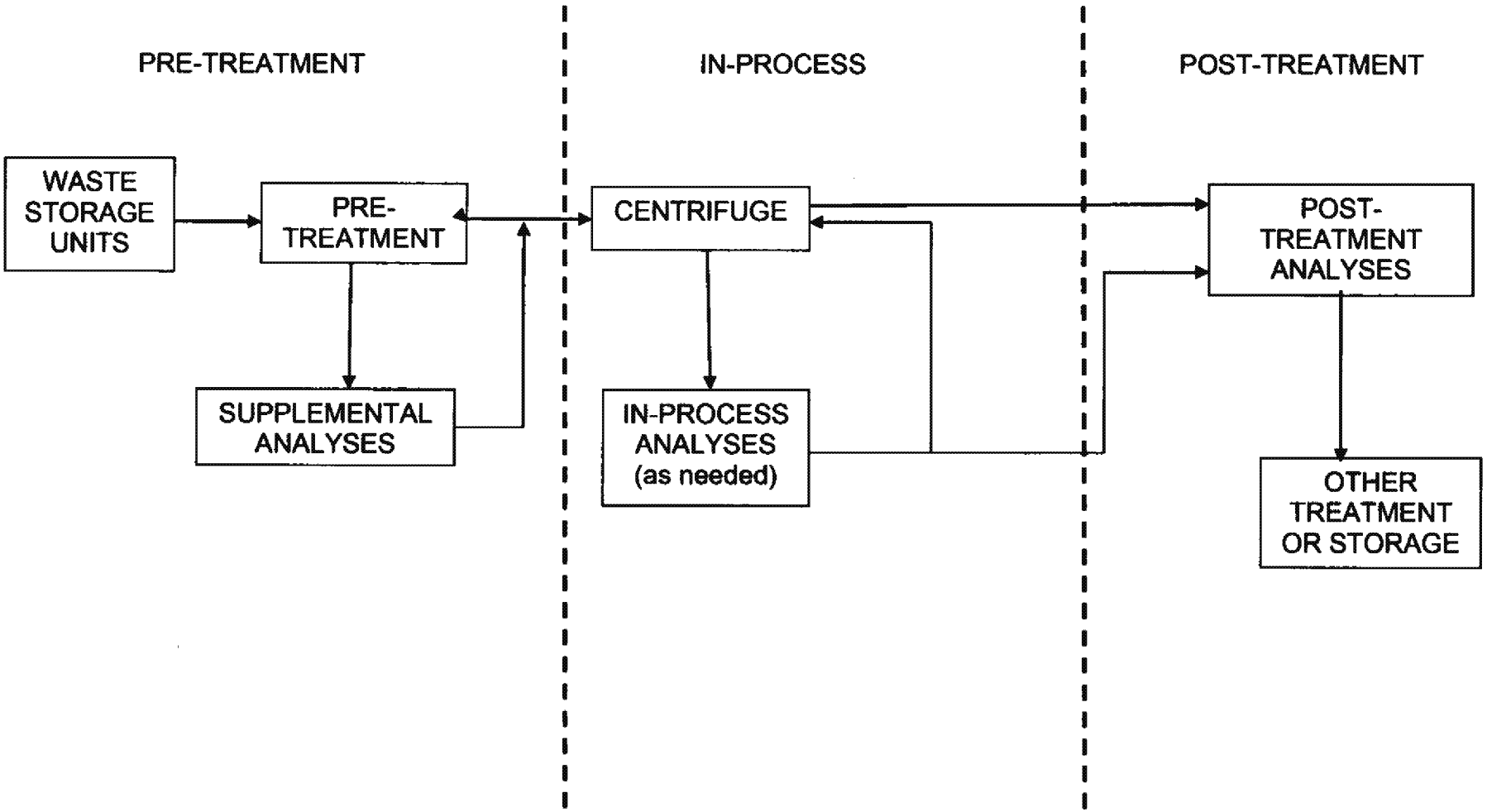

FIGURE 6-11
THERMAL TREATMENT

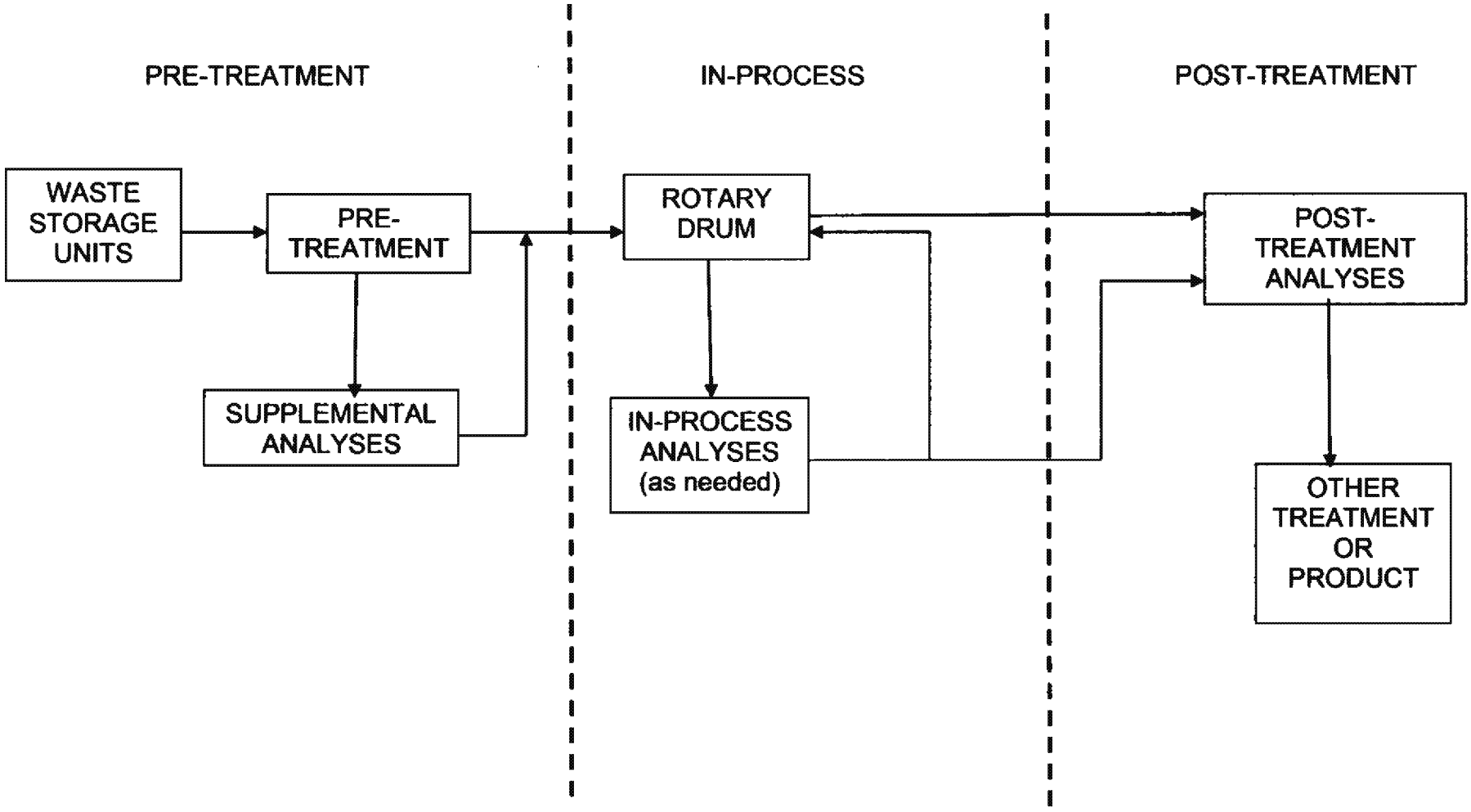

APPENDIX WAP-D

TABLE 3-1

TABLE 3-1

SAMPLING METHODS AND EQUIPMENT

Material	Method	Equipment
Extremely viscous liquid	ASTM D140[a] or ASTM E300[a]	Tubing or thief
Crushed or powered material	ASTM D346[a] or ASTM E300[a]	Tubing, trier, scoop or shovel
Soil or rock-like material	ASTM D420[a] or ASTM E300[a]	Tubing, trier, auger, scoop or shovel
Soil-like material	ASTM D1452[a] or ASTM E300[a]	Tubing, trier, auger, scoop or shovel
Fly ash-like material	ASTM D2234[a] or ASTM E300[a]	Tubing, trier, auger, scoop or shovel
Containerized liquids	SW-846[b] or ASTM E300[a]	Coliwasa or tubing
Liquids in pits, ponds, lagoons or reservoirs	SW-846[b] or ASTM E300[a]	Coliwasa or weighted bottle or bomb sampler

a American Society of Testing and Materials. Annual Book of ASTM Standards, Philadelphia, PA 2003 (or most recent edition).

b Test Methods for Evaluating Solid Waste: Physical/Chemical Methods, SW-846, Third Edition, U.S. Environmental Protection Agency, Office of Solid Waste, Washington, DC, September 1986, as referenced in 40 CFR 260.11.a.11 or most recent edition.

ATTACHMENT WAP-A

PROFESSIONAL ENGINEER'S CERTIFICATION

WASTE ANALYSIS PLAN (WAP) CERTIFICATION

I hereby certify that I have reviewed the Chemical Waste Management, Inc. Lake Charles Facility's November 2014 (Revision 17) WAP, and being familiar with the provisions of LAC 33:V.1519 and 40 CFR 264.13, attest that this WAP was prepared in accordance with standard industry practices and addresses the applicable regulatory requirements stipulated in LAC 33:V.1519 and 40 CFR 264.13

Registration No. 30568

State: Louisiana

Date: 11/5/14

Signed:

Gary J. Leonards