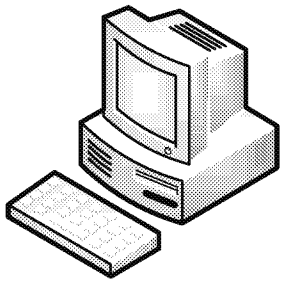

ELHM

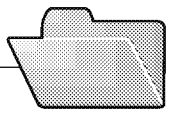

EPA HQ

See page 2

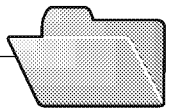

REGION 1

See page 20

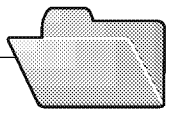

REGION 2

See page 21

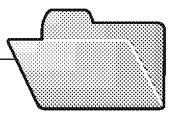

REGION 3

See page 22

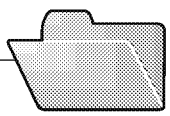

REGION 4

See page 23

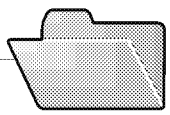

REGION 5

See page 24

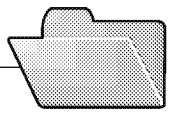

REGION 6

See page 25

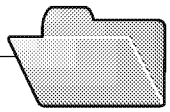

REGION 7

See page 26

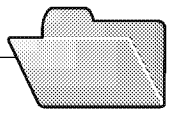

REGION 8

See page 27

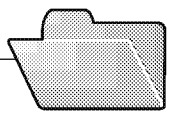

REGION 9

See page 28

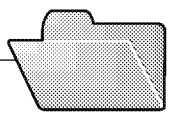

REGION 10

See page 29

ED_002272_00000019-00001

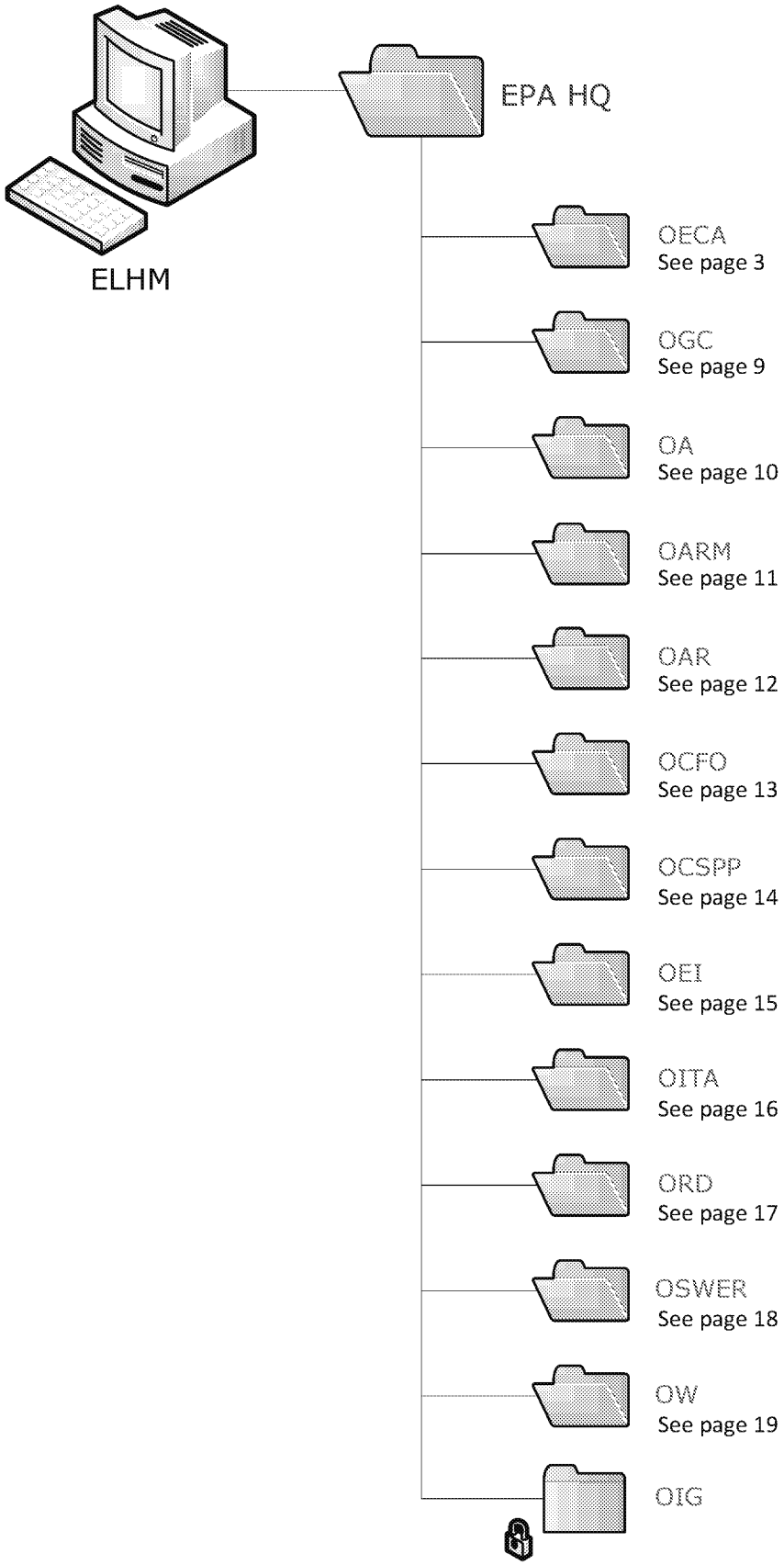
ELHM
EPA HQ
OECA
See page 3
OGC
See page 9
OA
See page 10
OARM
See page 11
OAR
See page 12
OCFO
See page 13
OCSPP
See page 14
OEI
See page 15
OITA
See page 16
ORD
See page 17
OSWER
See page 18
OW
See page 19
OIG

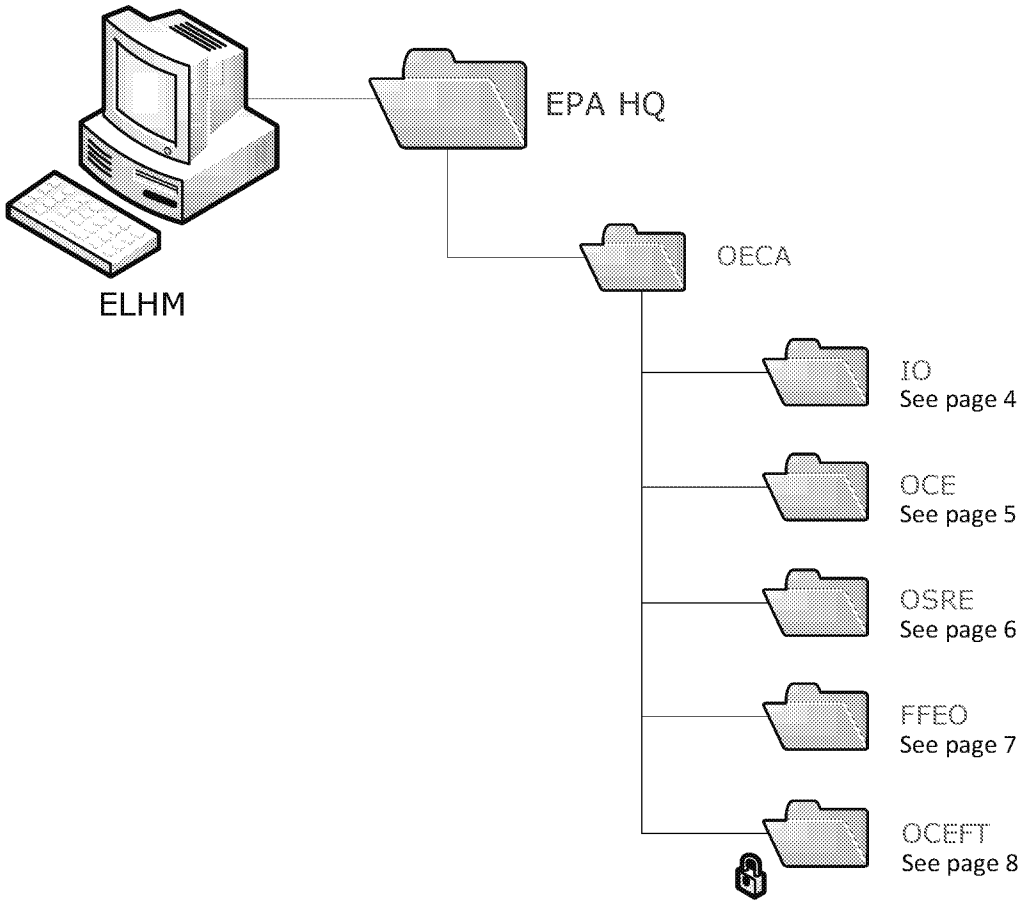
ELHM
EPA HQ
OECA
IO
See page 4
OCE
See page 5
OSRE
See page 6
FFEO
See page 7
OCEFT
See page 8

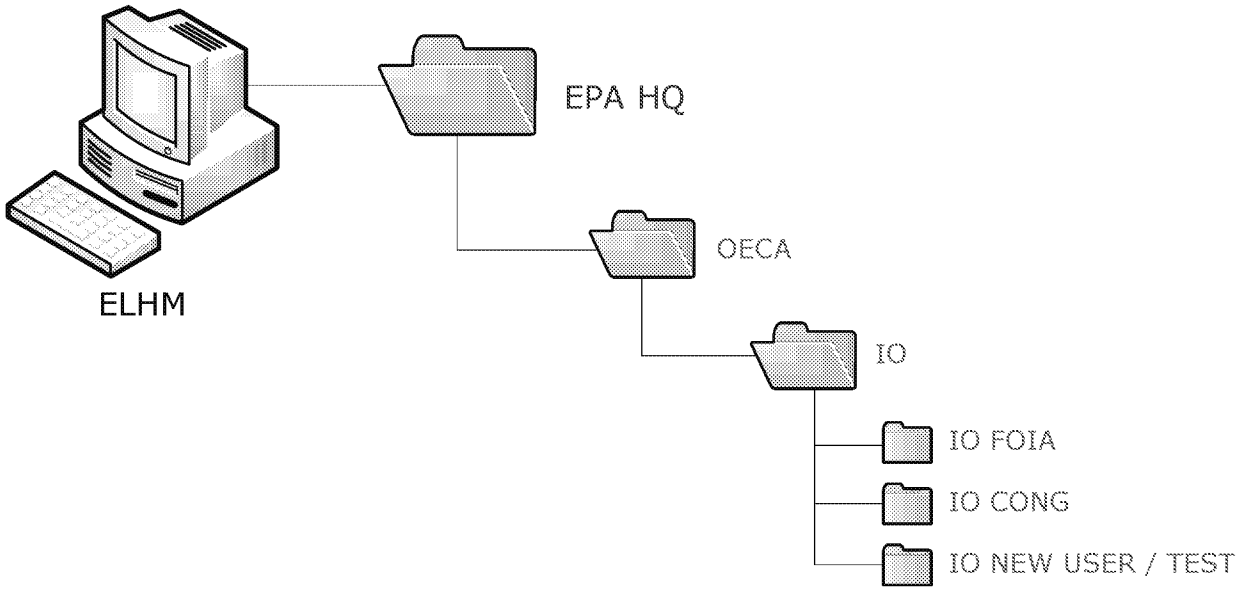
ELHM
EPA HQ
OECA
IO
IO FOIA
IO CONG
IO NEW USER / TEST

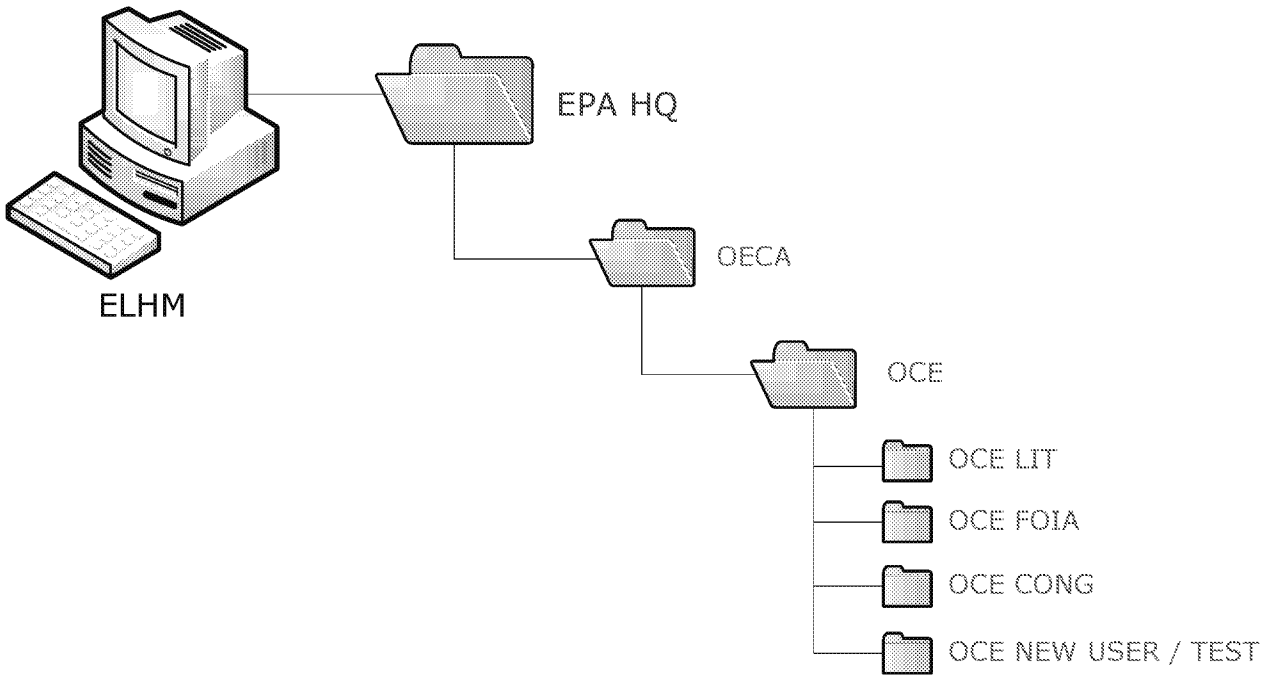
ELHM
EPA HQ
OECA
OCE
OCE LIT
OCE FOIA
OCE CONG
OCE NEW USER / TEST

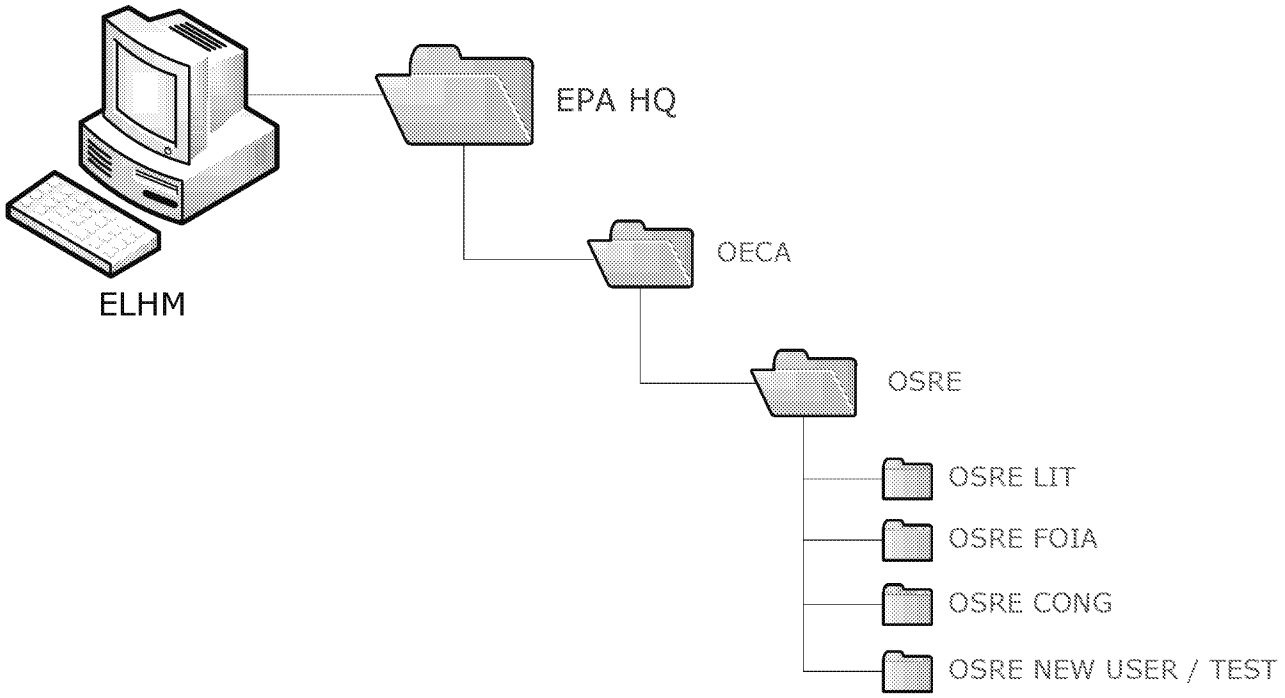
ELHM
EPA HQ
OECA
OSRE
OSRE LIT
OSRE FOIA
OSRE CONG
OSRE NEW USER / TEST

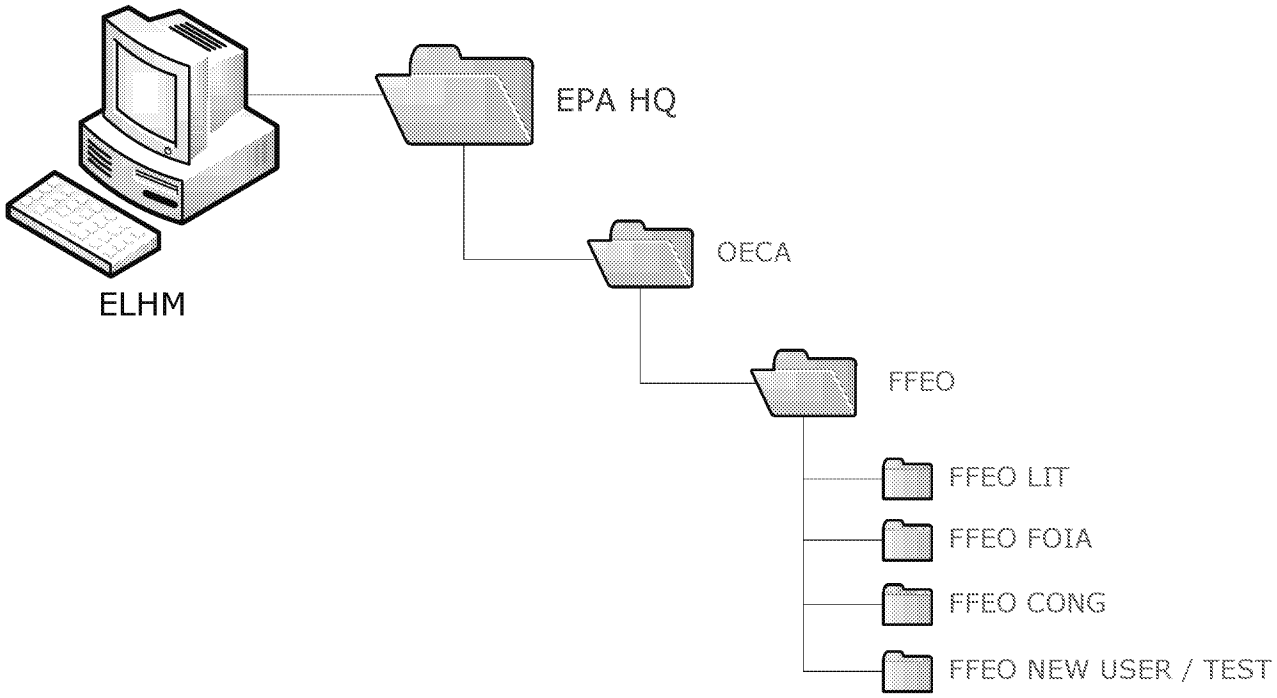
ELHM
EPA HQ
OECA
FFEO
FFEO LIT
FFEO FOIA
FFEO CONG
FFEO NEW USER / TEST

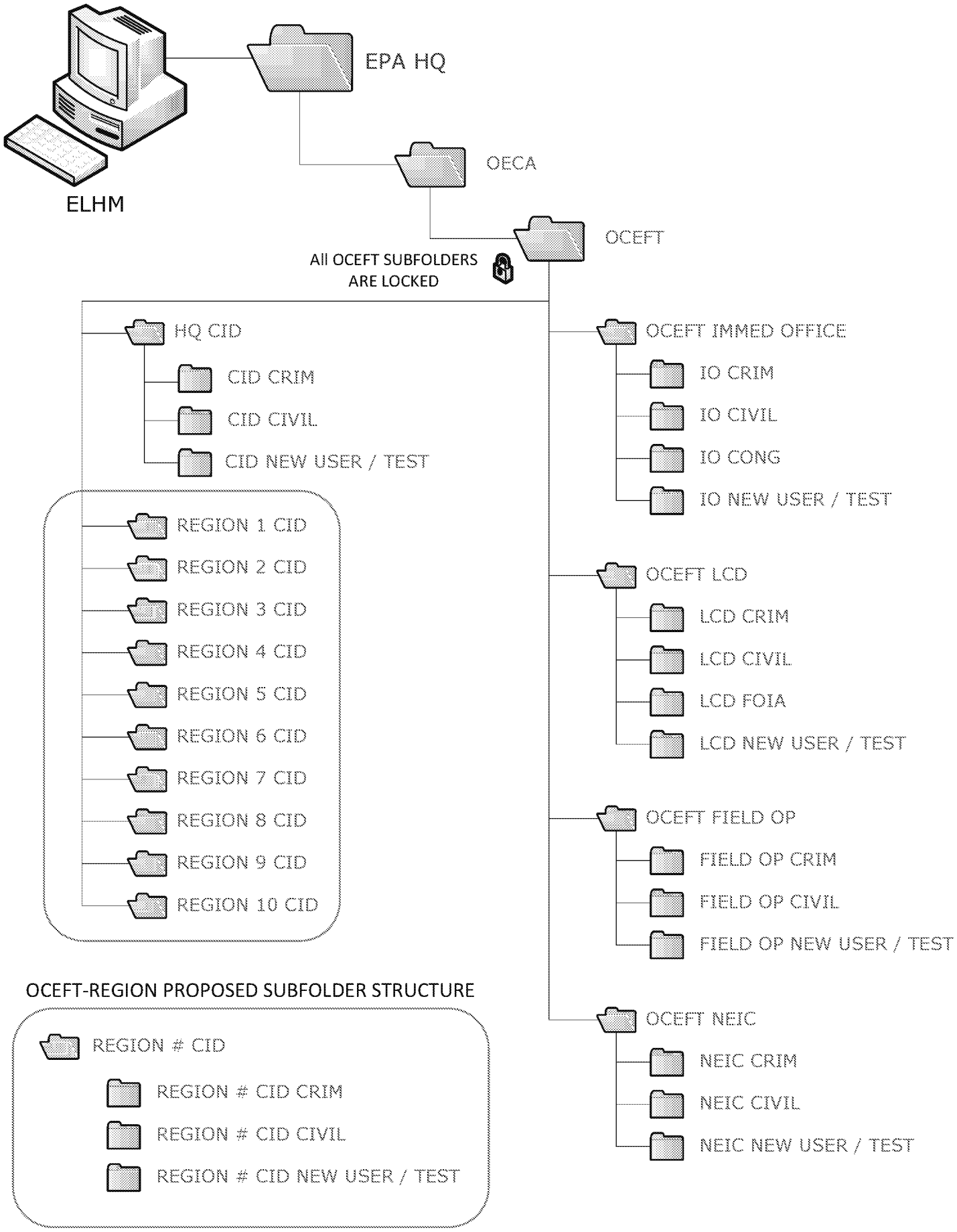
ELHM
EPA HQ
OECA
OCEFT
All OCEFT SUBFOLDERS ARE LOCKED
HQ CID
CID CRIM
CID CIVIL
CID NEW USER / TEST
REGION 1 CID
REGION 2 CID
REGION 3 CID
REGION 4 CID
REGION 5 CID
REGION 6 CID
REGION 7 CID
REGION 8 CID
REGION 9 CID
REGION 10 CID
OCEFT IMMED OFFICE
IO CRIM
IO CIVIL
IO CONG
IO NEW USER / TEST
OCEFT LCD
LCD CRIM
LCD CIVIL
LCD FOIA
LCD NEW USER / TEST
OCEFT FIELD OP
FIELD OP CRIM
FIELD OP CIVIL
FIELD OP NEW USER / TEST
OCEFT NEIC
NEIC CRIM
NEIC CIVIL
NEIC NEW USER / TEST
OCEFT-REGION PROPOSED SUBFOLDER STRUCTURE
REGION # CID
REGION # CID CRIM
REGION # CID CIVIL
REGION # CID NEW USER / TEST

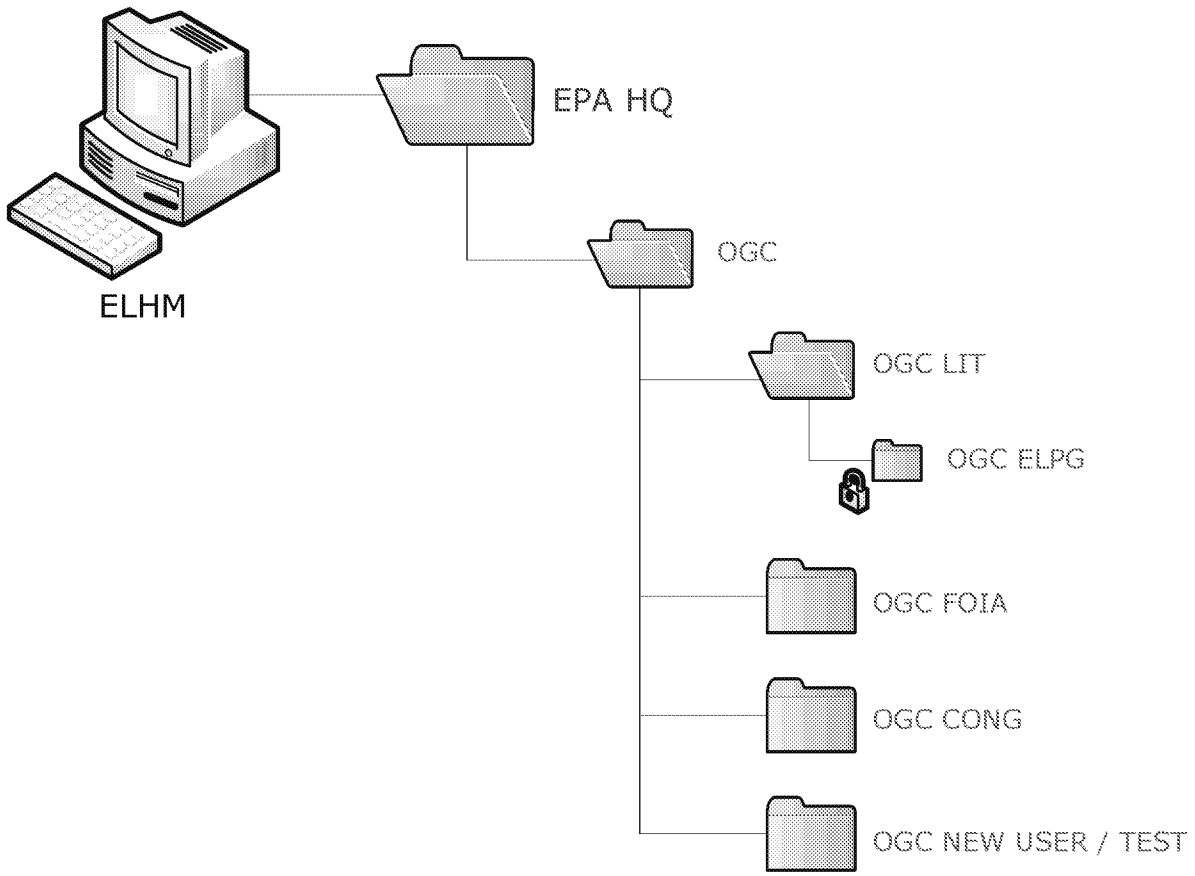
ELHM
EPA HQ
OGC
OGC LIT
OGC ELPG
OGC FOIA
OGC CONG
OGC NEW USER / TEST

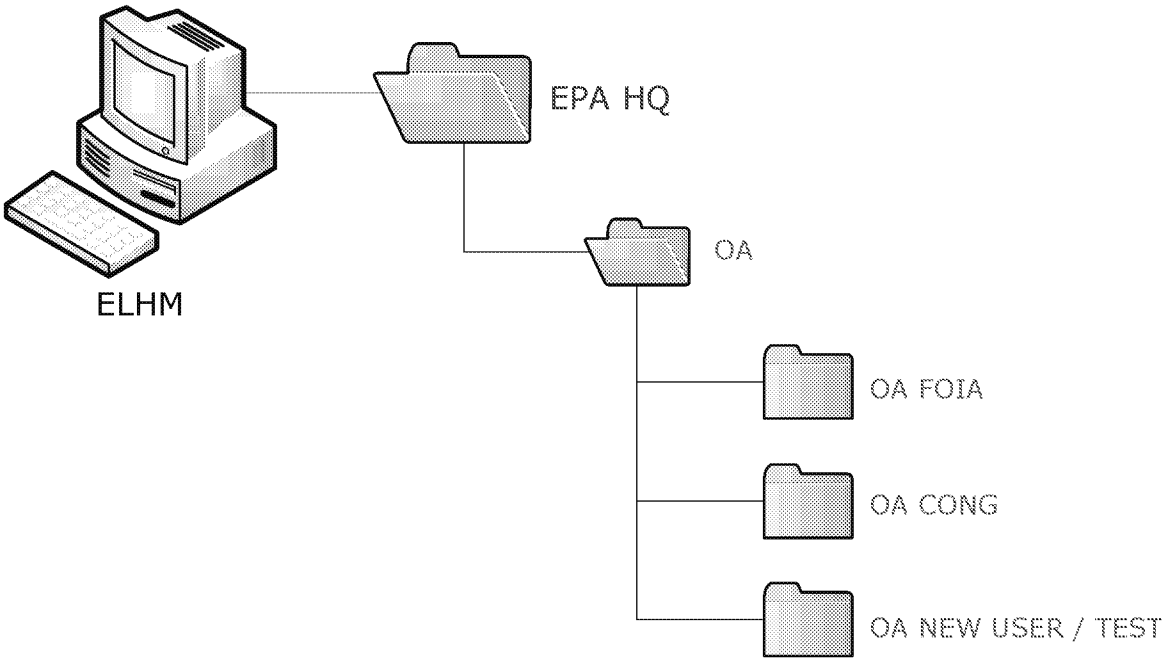
ELHM
EPA HQ
OA
OA FOIA
OA CONG
OA NEW USER / TEST

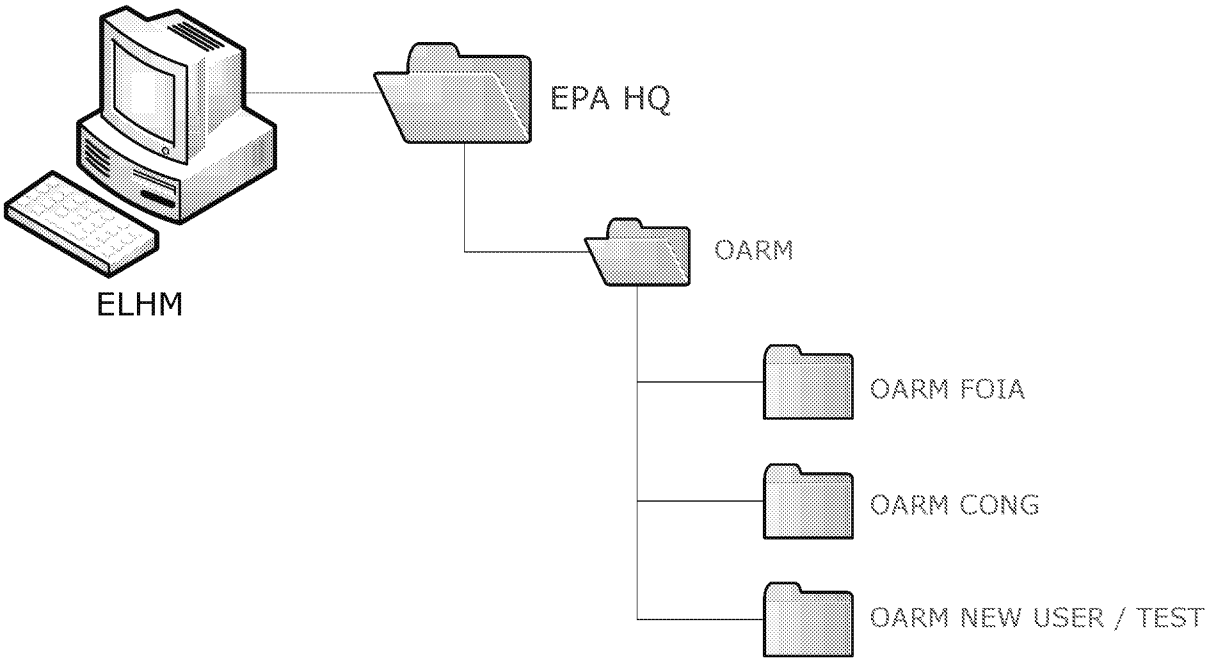
ELHM
EPA HQ
OARM
OARM FOIA
OARM CONG
OARM NEW USER / TEST

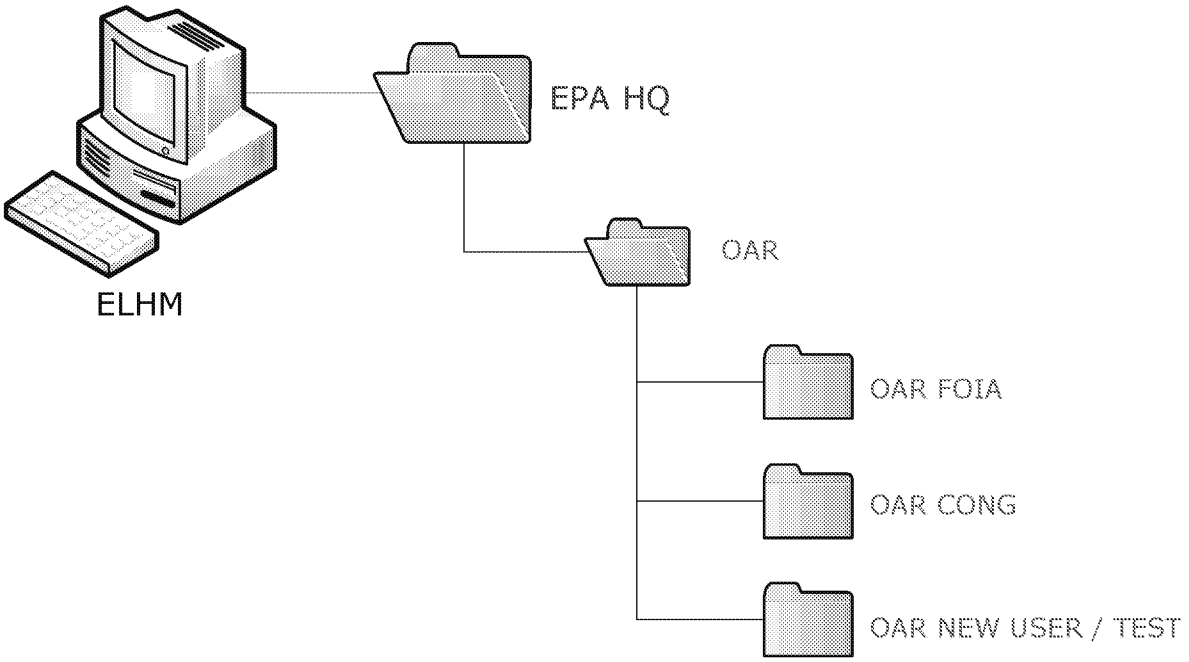
ELHM
EPA HQ
OAR
OAR FOIA
OAR CONG
OAR NEW USER / TEST

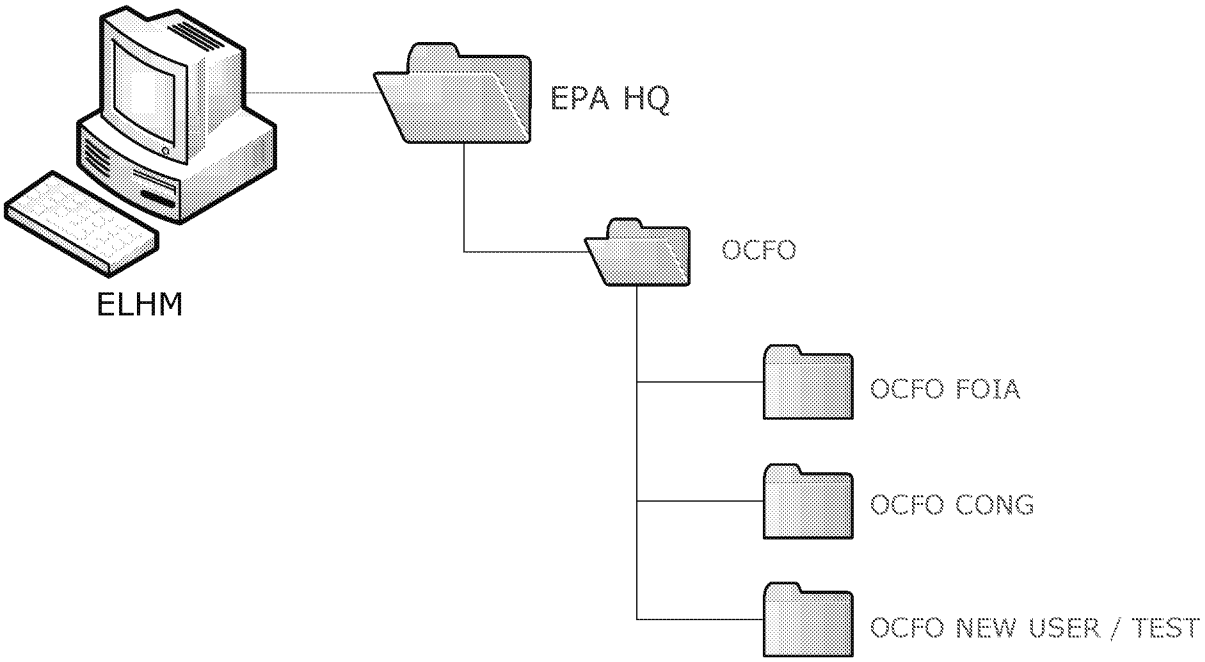
ELHM
EPA HQ
OCFO
OCFO FOIA
OCFO CONG
OCFO NEW USER / TEST

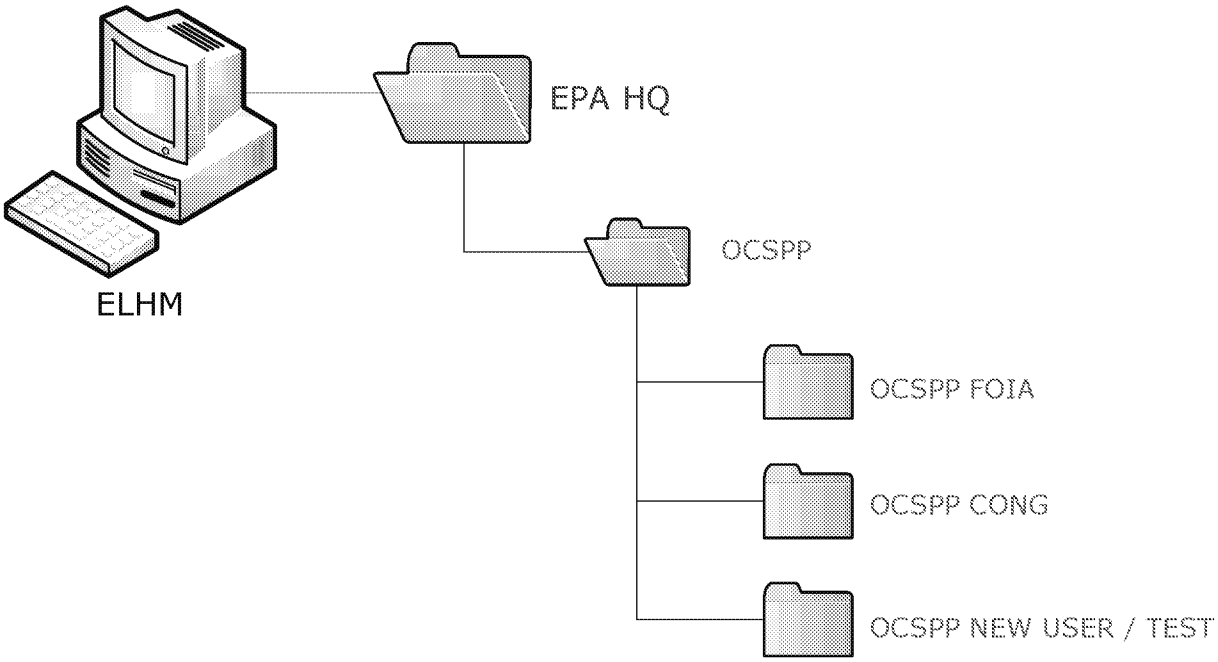
ELHM
EPA HQ
OCSPP
OCSPP FOIA
OCSPP CONG
OCSPP NEW USER / TEST

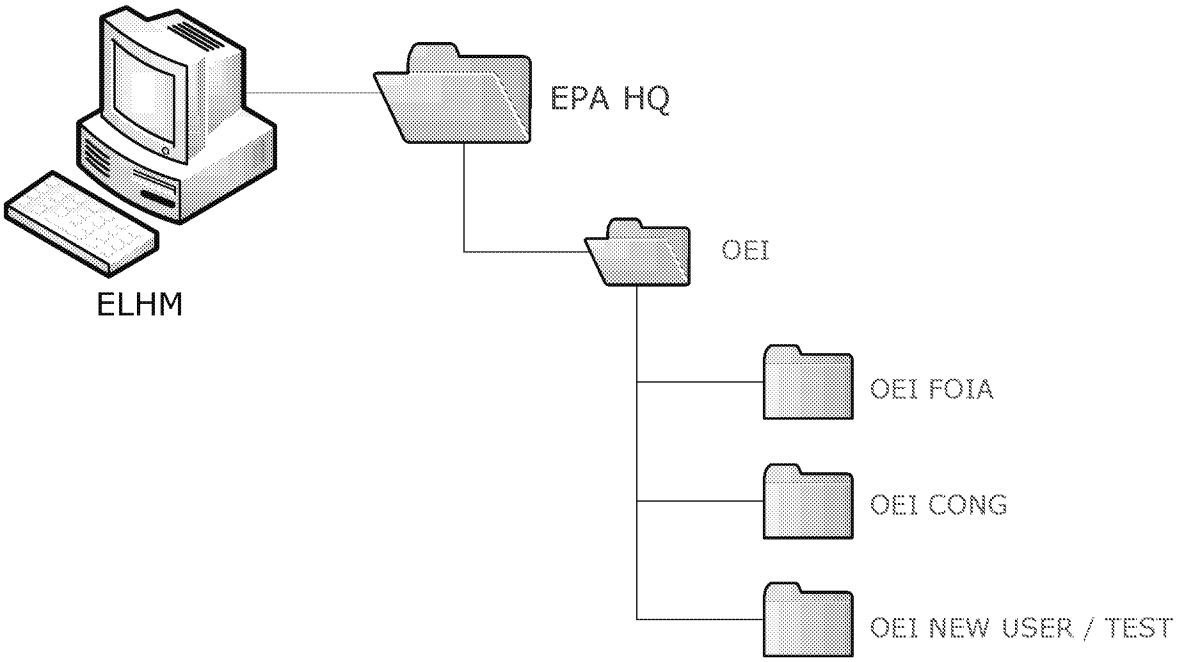
ELHM
EPA HQ
OEI
OEI FOIA
OEI CONG
OEI NEW USER / TEST

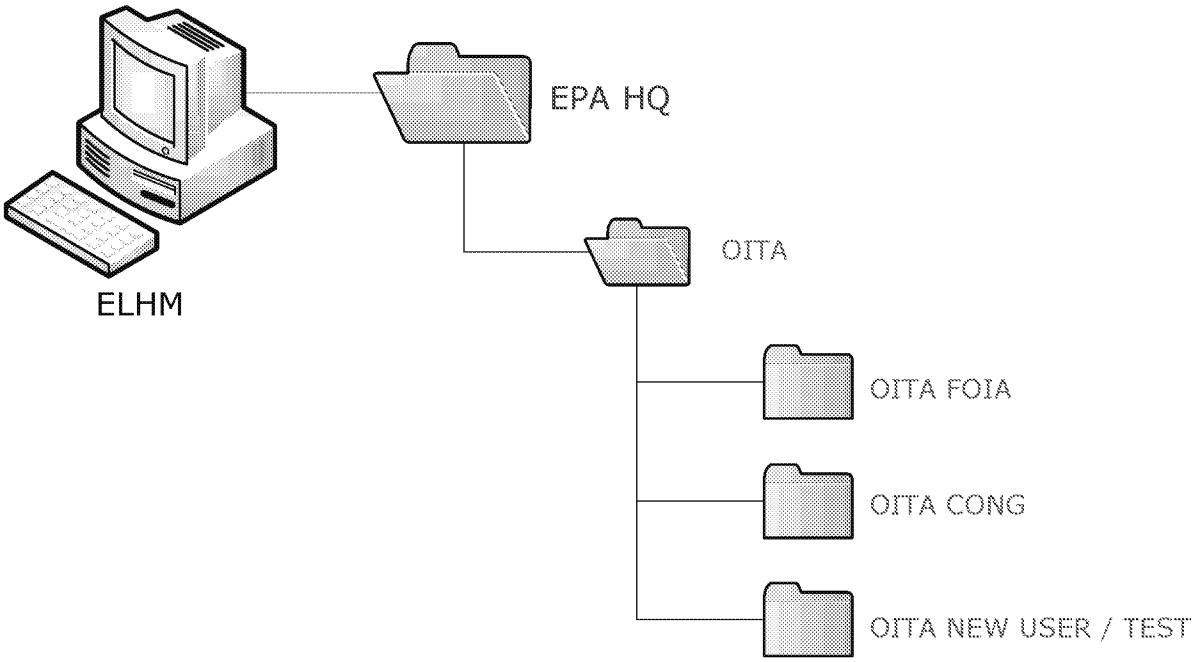
ELHM
EPA HQ
OITA
OITA FOIA
OITA CONG
OITA NEW USER / TEST

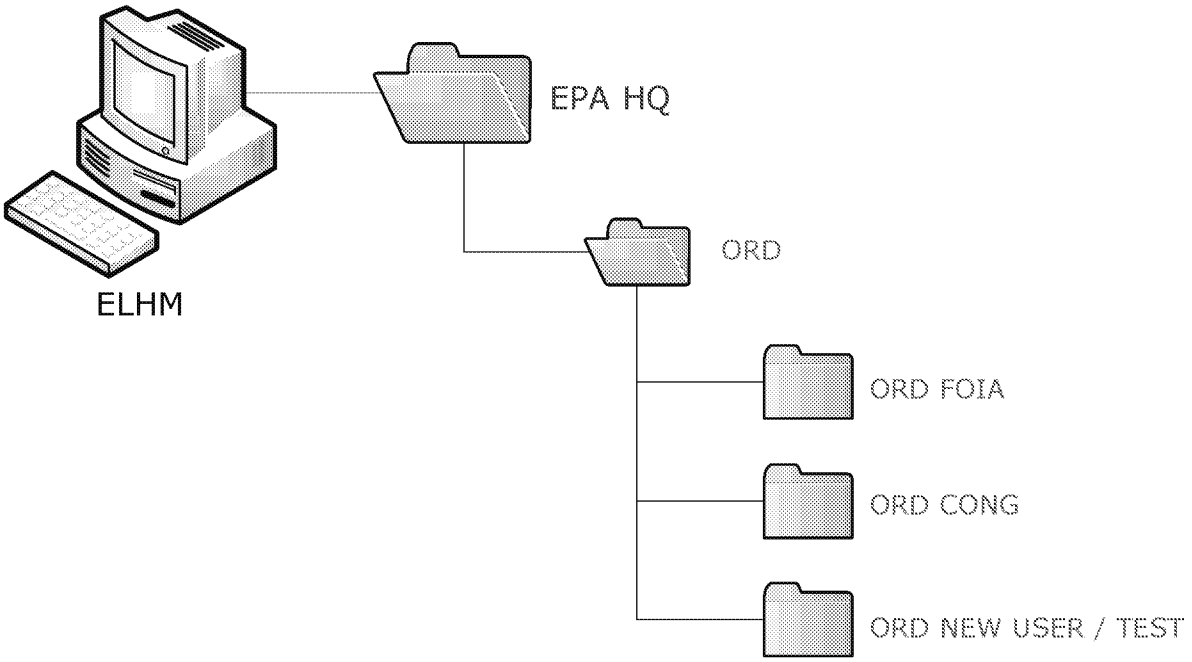
ELHM
EPA HQ
ORD
ORD FOIA
ORD CONG
ORD NEW USER / TEST

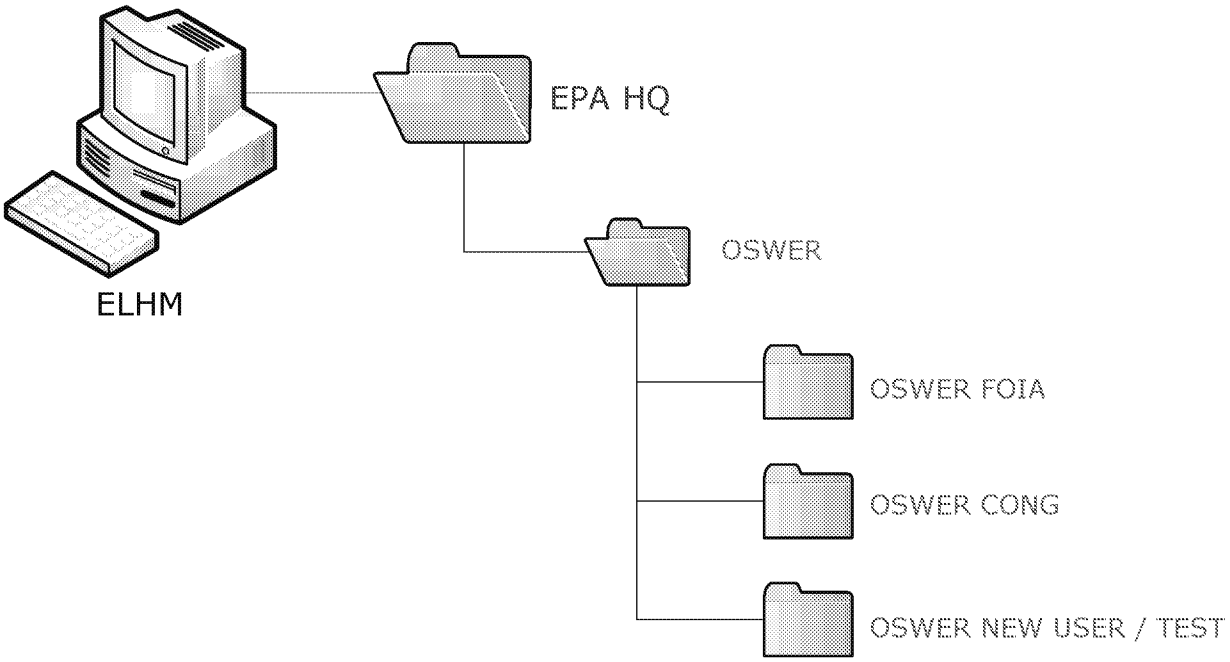
ELHM
EPA HQ
OSWER
OSWER FOIA
OSWER CONG
OSWER NEW USER / TEST

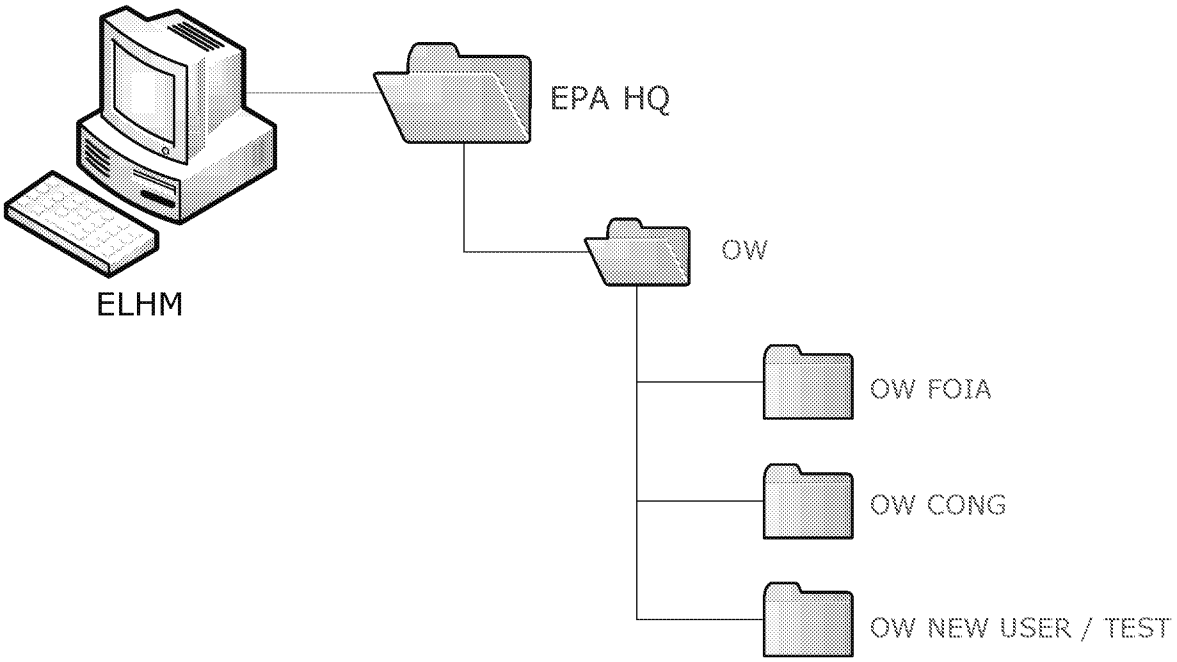
ELHM
EPA HQ
OW
OW FOIA
OW CONG
OW NEW USER / TEST

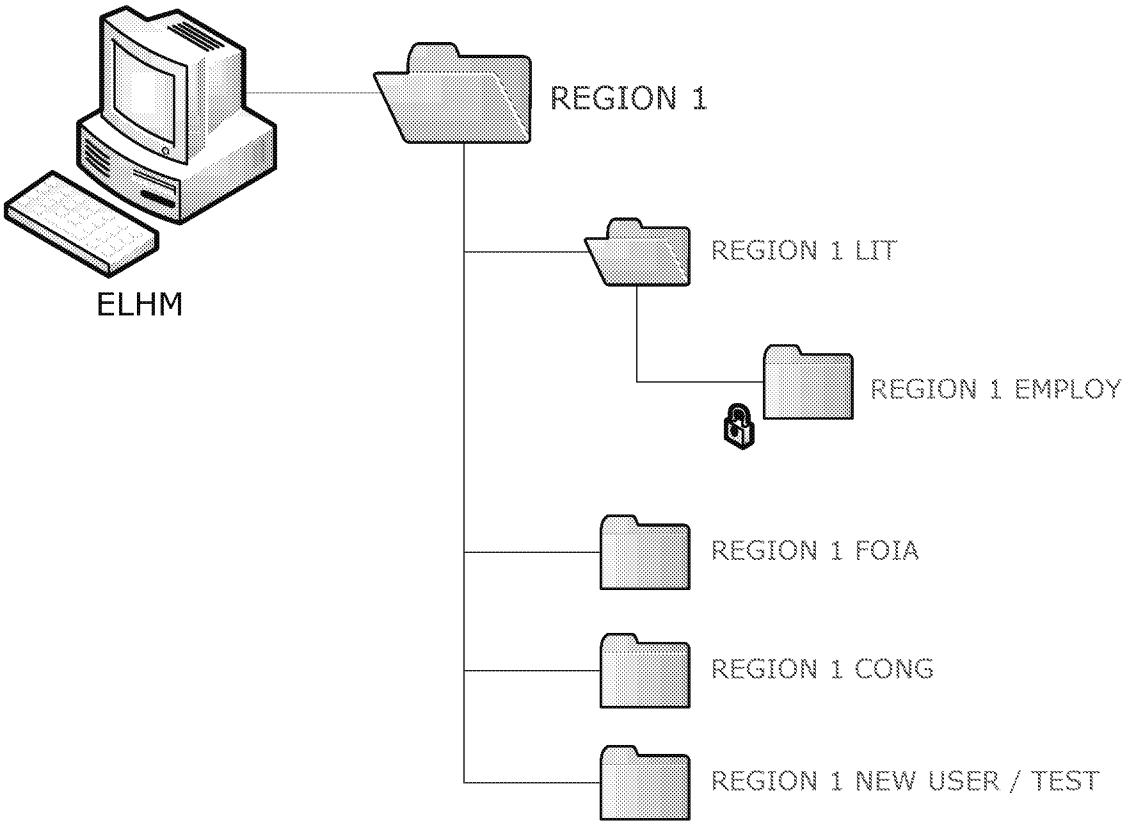
ELHM
REGION 1
REGION 1 LIT
REGION 1 EMPLOY
REGION 1 FOIA
REGION 1 CONG
REGION 1 NEW USER / TEST

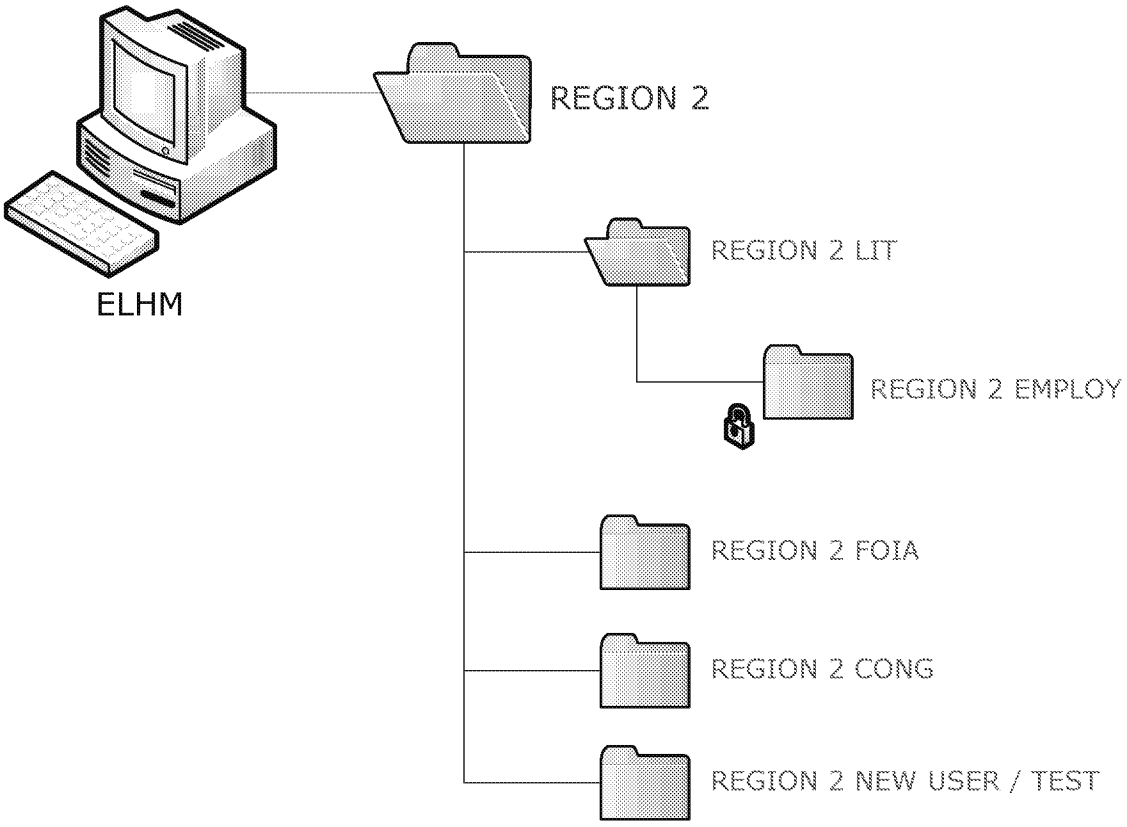
ELHM
REGION 2
REGION 2 LIT
REGION 2 EMPLOY
REGION 2 FOIA
REGION 2 CONG
REGION 2 NEW USER / TEST

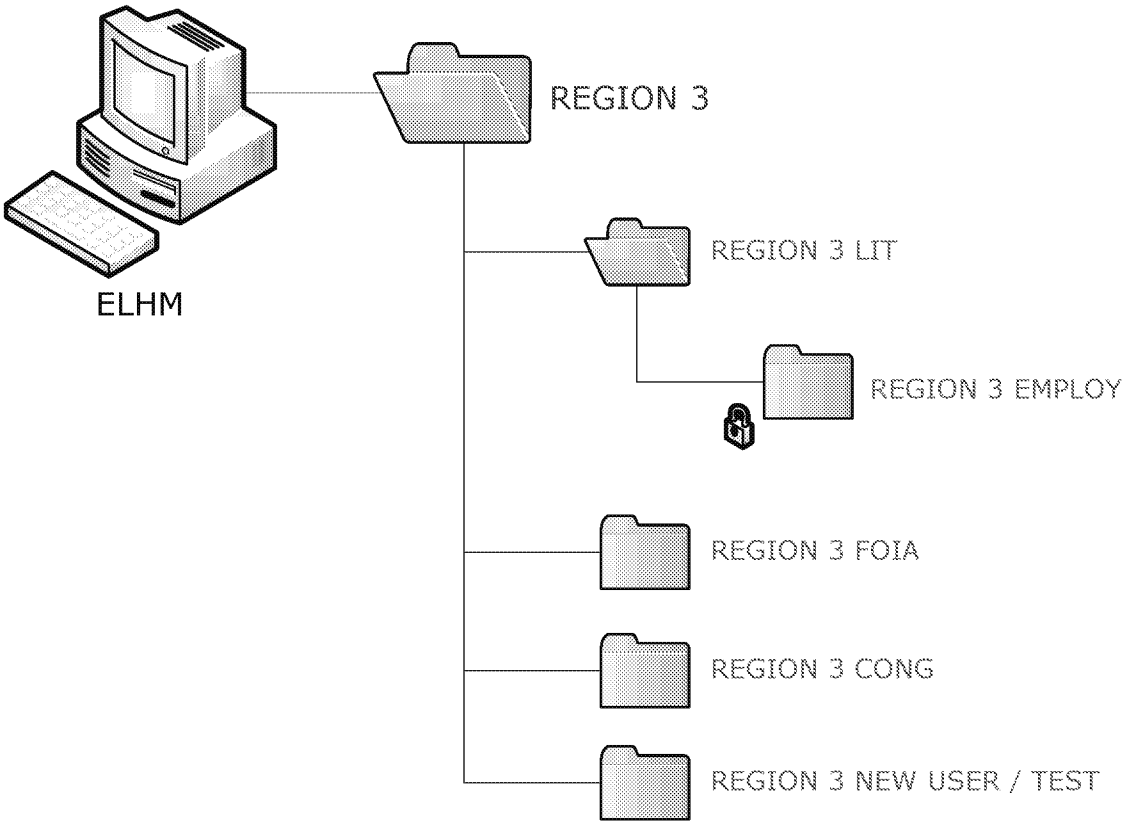
ELHM
REGION 3
REGION 3 LIT
REGION 3 EMPLOY
REGION 3 FOIA
REGION 3 CONG
REGION 3 NEW USER / TEST

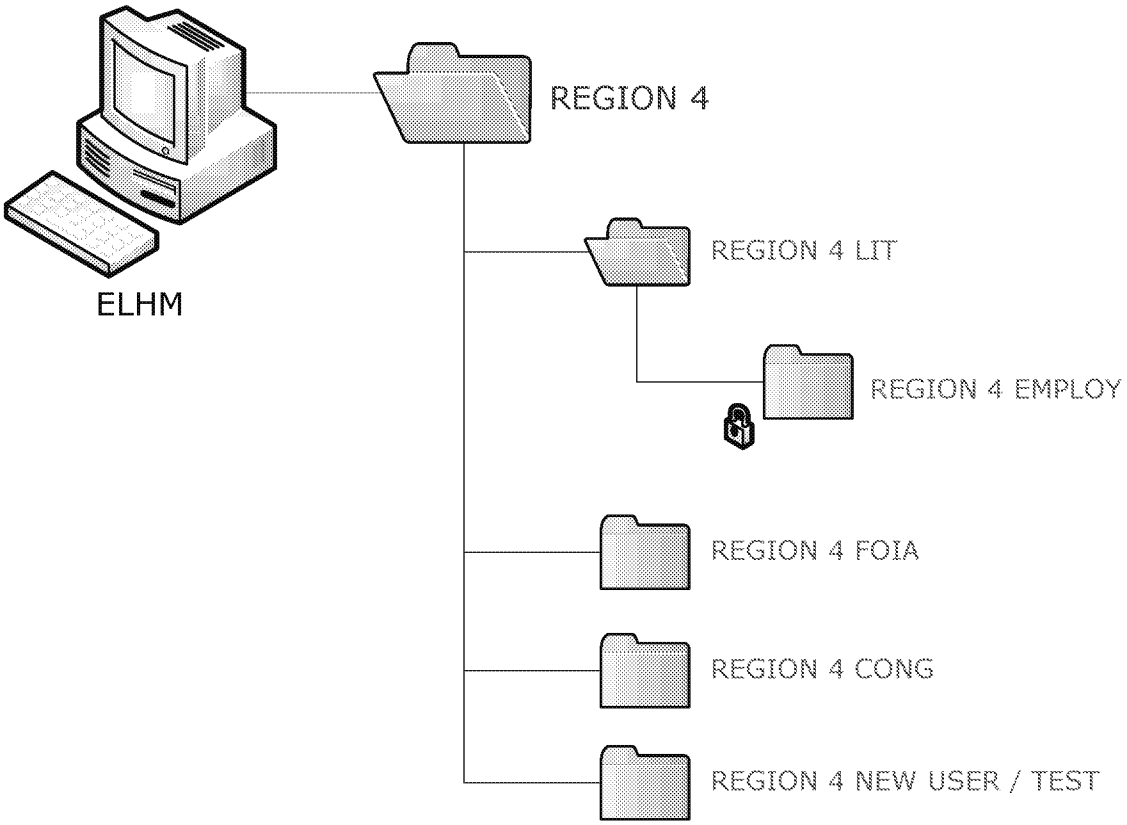
ELHM
REGION 4
REGION 4 LIT
REGION 4 EMPLOY
REGION 4 FOIA
REGION 4 CONG
REGION 4 NEW USER / TEST

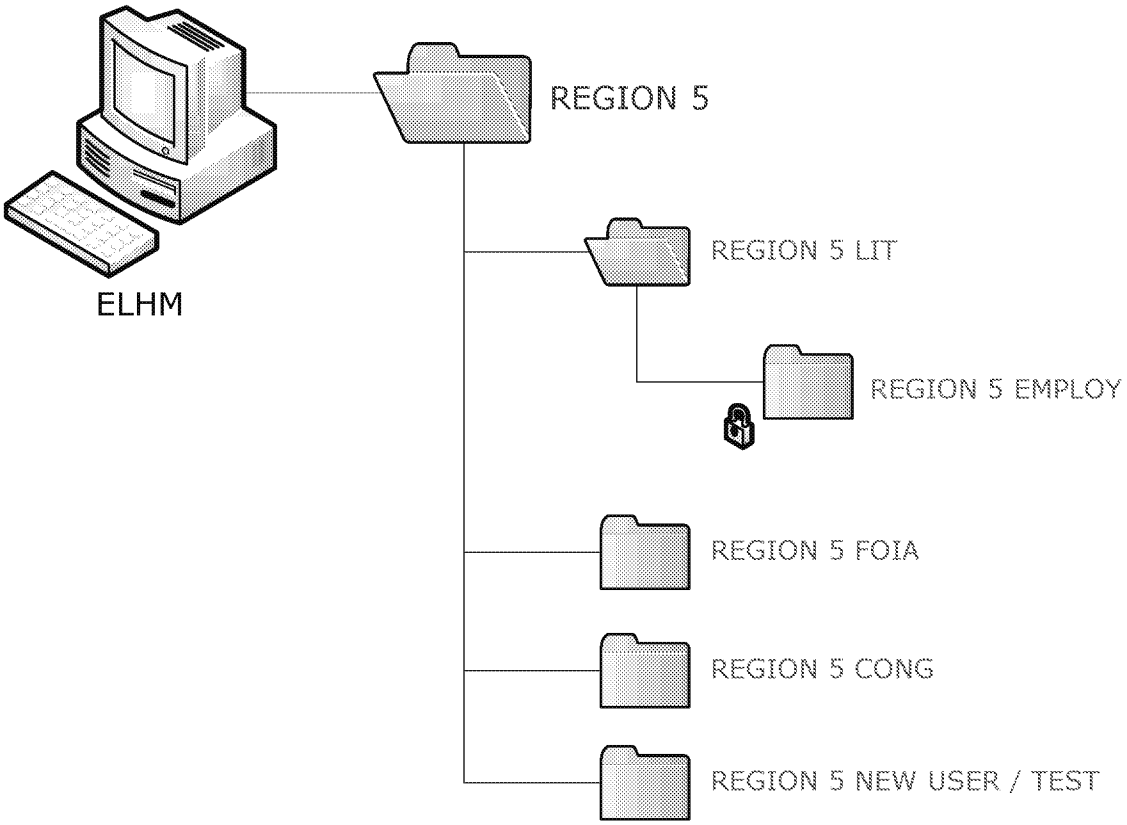
ELHM
REGION 5
REGION 5 LIT
REGION 5 EMPLOY
REGION 5 FOIA
REGION 5 CONG
REGION 5 NEW USER / TEST

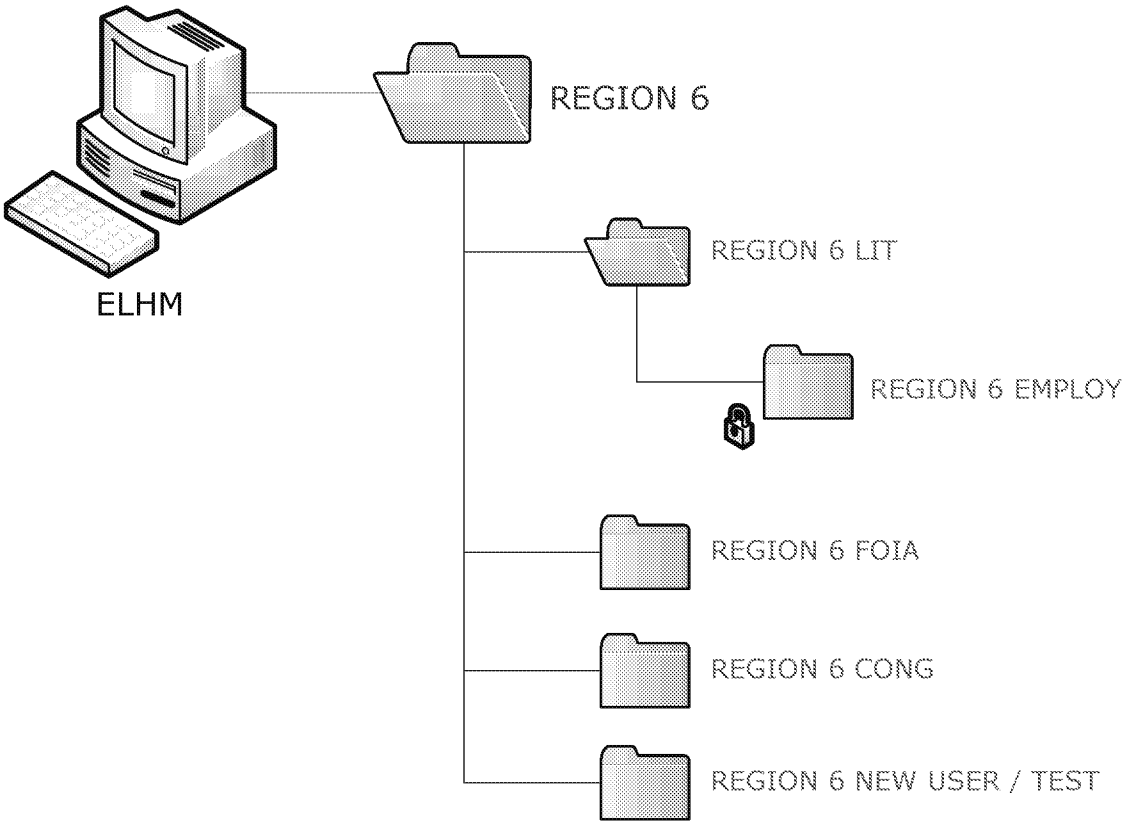
ELHM
REGION 6
REGION 6 LIT
REGION 6 EMPLOY
REGION 6 FOIA
REGION 6 CONG
REGION 6 NEW USER / TEST

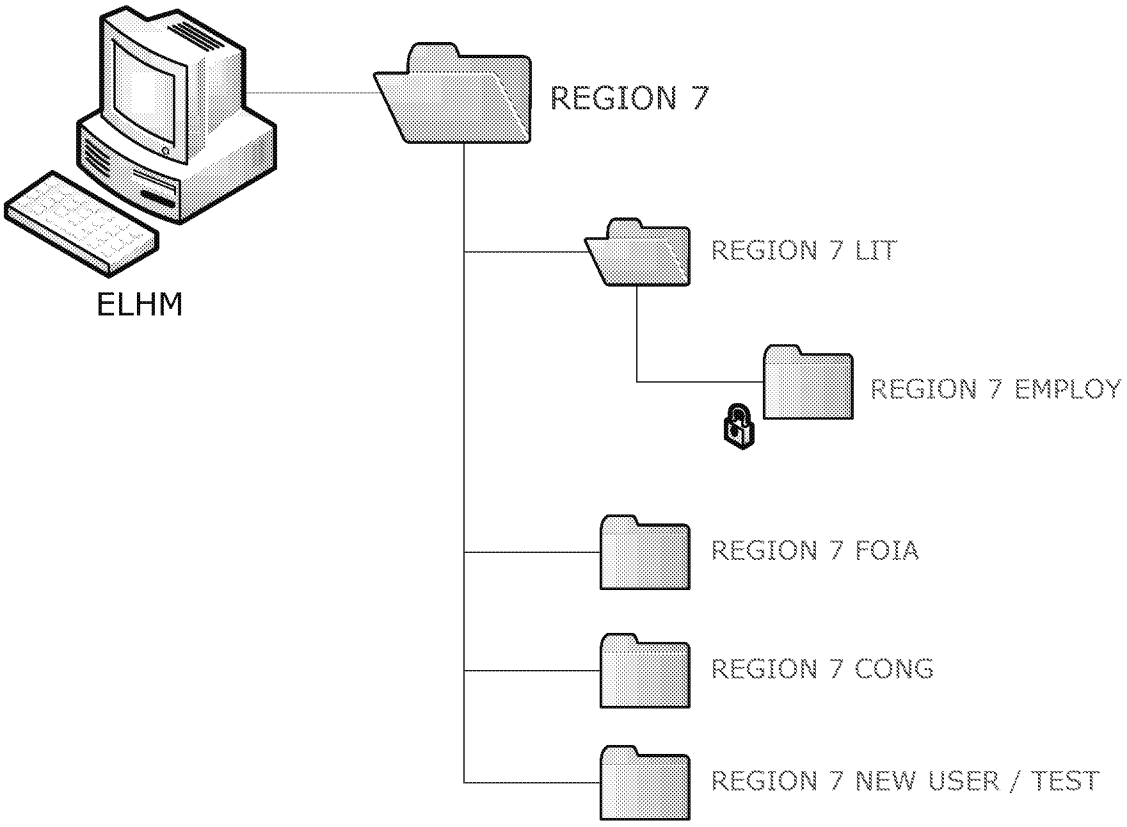
ELHM
REGION 7
REGION 7 LIT
REGION 7 EMPLOY
REGION 7 FOIA
REGION 7 CONG
REGION 7 NEW USER / TEST

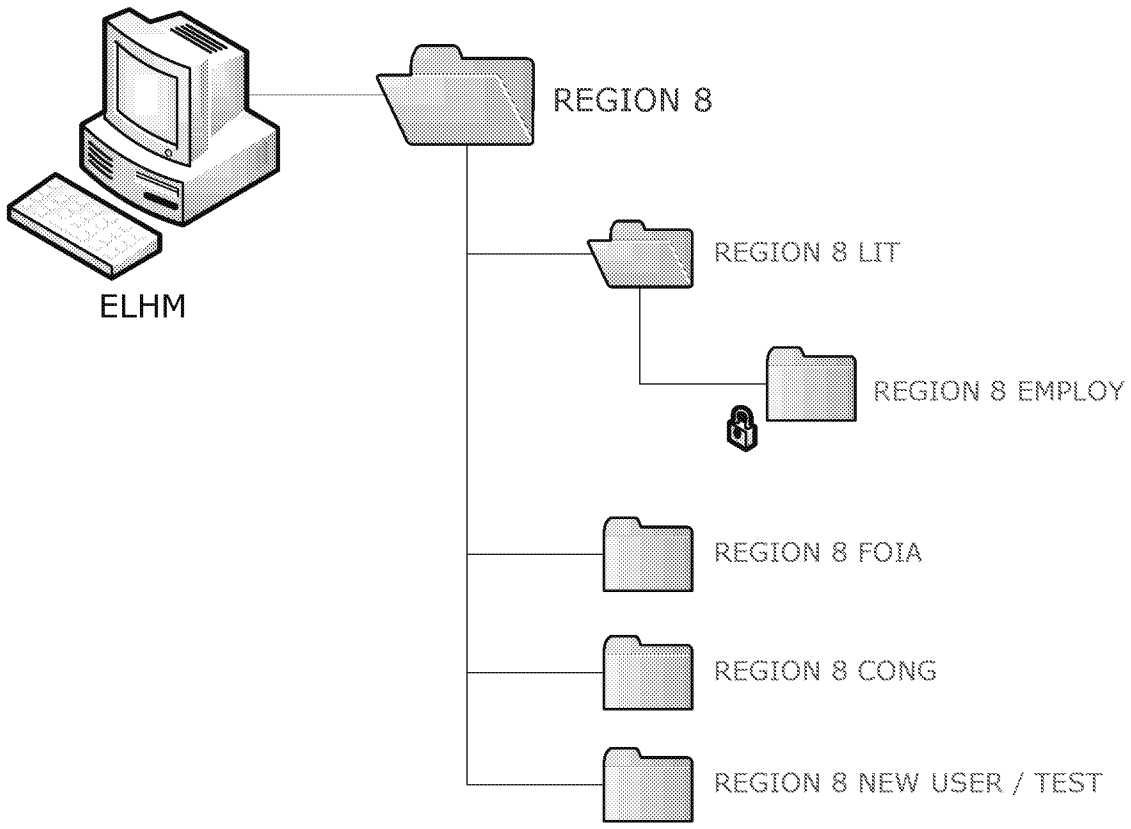
ELHM
REGION 8
REGION 8 LIT
REGION 8 EMPLOY
REGION 8 FOIA
REGION 8 CONG
REGION 8 NEW USER / TEST

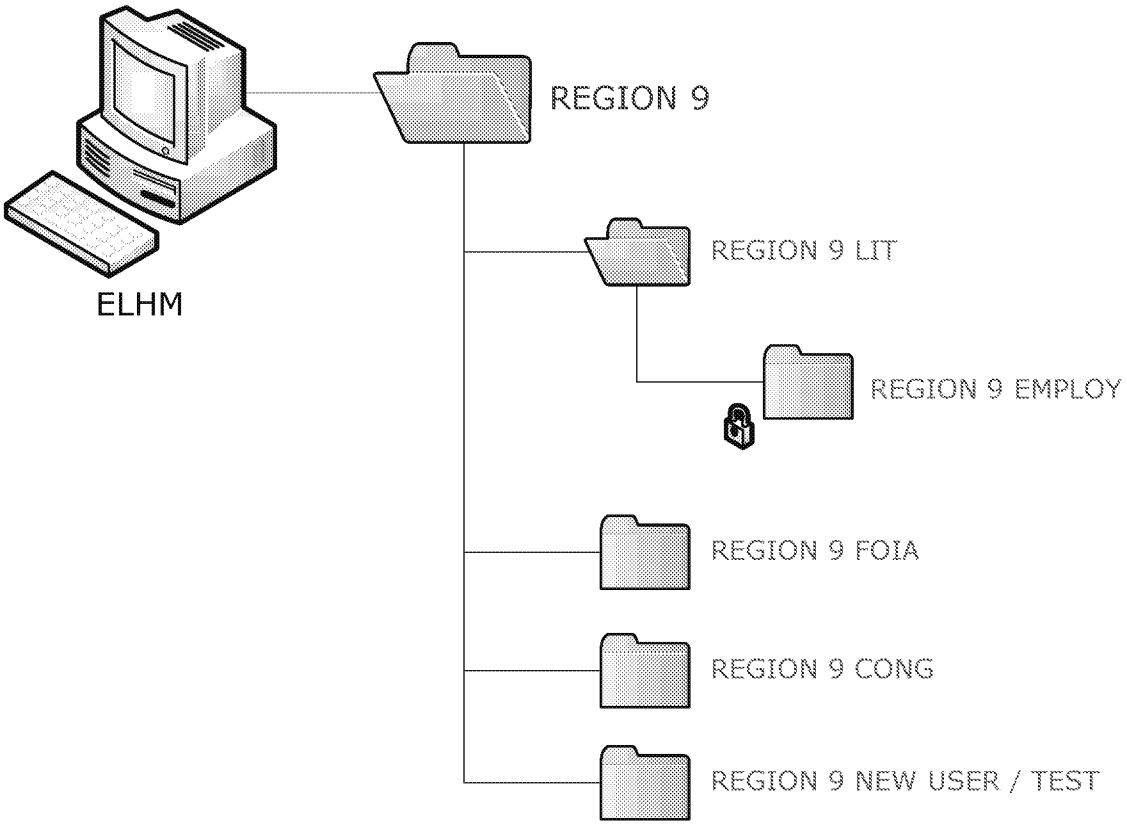
ELHM
REGION 9
REGION 9 LIT
REGION 9 EMPLOY
REGION 9 FOIA
REGION 9 CONG
REGION 9 NEW USER / TEST

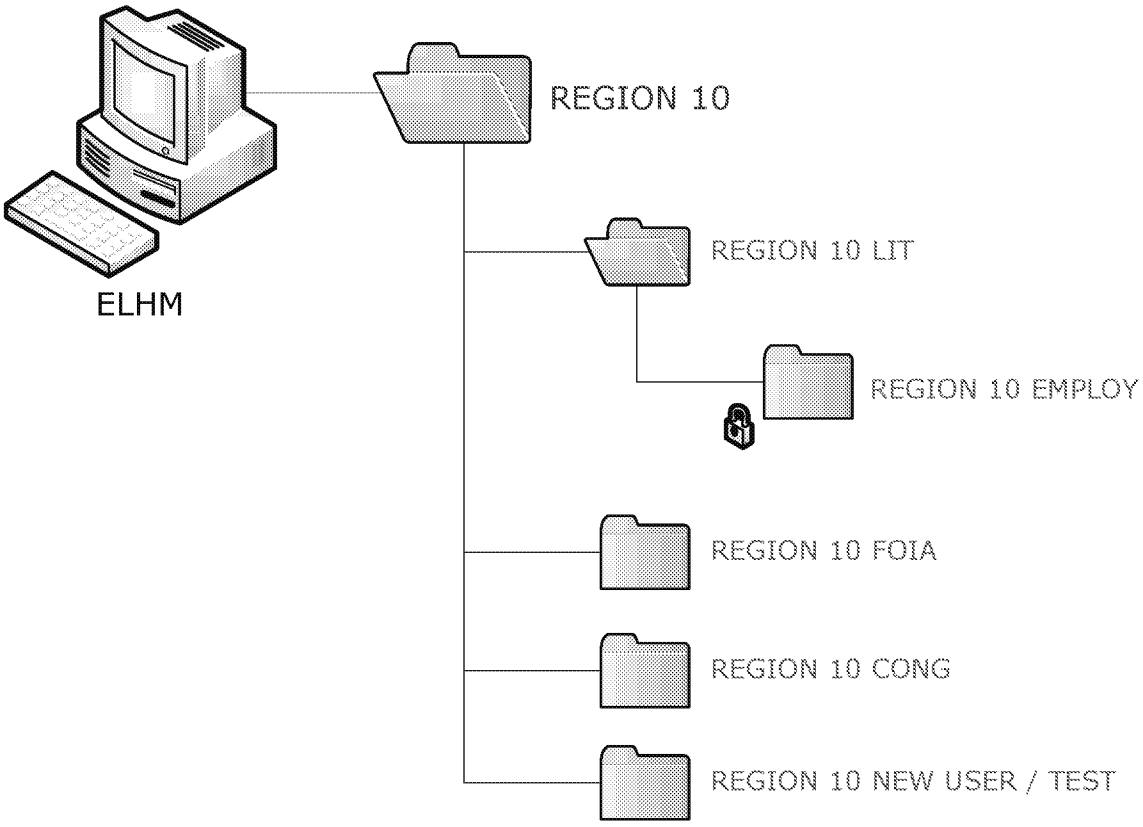
ELHM
REGION 10
REGION 10 LIT
REGION 10 EMPLOY
REGION 10 FOIA
REGION 10 CONG
REGION 10 NEW USER / TEST

Legend and Symbols

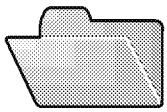	An open folder denotes that there are subsequent folders within.
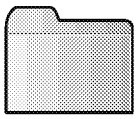	A closed folder denotes that there are no other folders within.
	A lock denotes that the folder is locked with limited access to named individuals.

Unique Sub-Folders Index

Sub-Folder	Page
CID	8
FIELD OP	8
IO	3, 4, 8
LCD	8
NEIC	8
OCEFT	3, 8
OCE	3, 5
ORSE	3, 6

ED_002272_00000019-00030